Lucent Technologies
Bell Labs Innovations

DACS III-2000 Digital Access and Cross-Connect System III-2000 Release 4.0

Operations and Maintenance

AT&T 365-331-201
Issue 1
September 1994

Copyright© 1994 AT&T
All Rights Reserved
Printed in U.S.A.

Notice

Every effort was made to ensure that the information in this document was complete and accurate at the time of printing. However, information is subject to change.

Federal Communications Commission (FCC) Statement

Warning: This equipment generates, uses, and can radiate radio frequency energy and if not installed and used in accordance with the instructions manual, may cause interference to radio communications. Operation of this equipment in a residential area is likely to cause interference in which case the user at their own expense will be required to take whatever measures may be required to correct the interference.

Security

In rare instances, unauthorized individuals make connections to the telecommunications network or elements through the use of remote access features. In such event, applicable tariffs require that the customer pay all network charges for traffic. AT&T cannot be responsible for such charges and will not make any allowance or give any credit for charges that result from unauthorized access.

Trademarks

ACCUNET and SLC are registered trademarks of AT&T.

DACScan and PAQ are trademarks of AT&T.

ANSI is a registered trademark of American National Standards Institute.

COMMON LANGUAGE and TIRKS are registered trademarks and CLEI, CLLI, CLCI, and CLFI are trademarks of Bell Communications Research, Inc.

UNIX is a registered trademark of UNIX System Laboratories, Inc.

Warranty

AT&T provides a limited warranty to this product. For more information, consult your AT&T Account Executive.

Documentation Ordering Information

The ordering number for this document is AT&T 365-331-201, Issue 1. To order this document, call the AT&T Customer Information Center in Indianapolis, Indiana, on 1 800 432-6600 or 1 317 352-8557. Refer to the section "About This Document" for additional ordering information.

Operations and Maintenance (AT&T 365-331-201, Issue 1)

Prepared by the AT&T Bell Laboratories
Technical Publications Center

This document has been produced and distributed by Lucent Technologies, the successor to the systems & technologies businesses of AT&T. Any references to AT&T should hereinafter read as references to Lucent Technologies.

Quality...
For All Your Networking Needs

AT&T's extensive line of transmission solutions goes far beyond equipment and systems. Rather, these value-added packages of products and services offer comprehensive answers based on the future directions of the information movement and management industry.

Malcolm Baldrige National Quality Award

1992 Winner

AT&T Transmission Systems

To produce customer-driven solutions, we compare your requirements for today with your aspirations for tomorrow. The result is a platform for graceful network evolution which allows you to grow effectively and economically with the needs of your market.

For AT&T, consistent customer-driven solutions require applying the Malcolm Baldrige criteria to our process year after year to assure that these products are manufactured to conform to our customers' exacting standards. In 1992, as a major milestone in our unending journey to complete customer satisfaction, the AT&T Transmission Systems Business Unit received the United States' highest honor for quality management and achievement – the Malcolm Baldrige National Quality Award.

We look at this award as a recognition of our customer-focused efforts. However, it is only a milestone, not our final destination. We continue to apply its exacting criteria to help us deliver this collection of technologically-advanced solutions that are capable of providing consistent network-proven reliability and service. The value of these solutions also extends to AT&T's legendary engineering and installation services enabling you to give to your customers the quality service they require. Their ultimate value comes from the leadership of AT&T Bell Laboratories for leading-edge technology designed into every product.

We Welcome Your Opinion

AT&T welcomes your feedback on this document. Your comments are of great value in helping us improve our documentation.

DACS III-2000, Release 4.0, Operations and Maintenance
AT&T 365-331-201 September, 1994

1. Please rate the effectiveness of this document in the following areas:

Area	Excellent	Good	Fair	Poor
Ease of finding information				
Clarity				
Completeness				
Accuracy				
Organization				
Appearance				
Examples				
Illustrations				
Overall Satisfaction				

2. Please check the ways you feel we could improve this document:

   - ❑ Improve the overview/introduction
   - ❑ Improve the index
   - ❑ Improve the organization
   - ❑ Include more figures
   - ❑ Add more examples
   - ❑ Make it more concise/brief
   - ❑ Add more step-by-step procedures/tutorials
   - ❑ Add more troubleshooting information

   Please provide details for suggested improvements. _____

   _____

3. What did you like most about this document?

   _____

   _____

4. Feel free to write any comments below or on an attached sheet.

   _____

   _____

   _____

   _____

If we can contact you concerning your comments, please complete the following.

Name: _____ Telephone Number: (____)_____

Company/Organization: _____ Date: _____

Address: _____

When you have completed this form, please fold, tape, and return to address on back or Fax to: 908-949-6784.

Do Not Cut — Fold Here And Tape

AT&T

NO POSTAGE
NECESSARY
IF MAILED
IN THE
UNITED STATES

BUSINESS REPLY MAIL

FIRST CLASS PERMIT NO. 5 NEW PROVIDENCE N.J.

POSTAGE WILL BE PAID BY ADDRESSEE

DACS III/IV-2000 Documentation
Coordinator
AT&T Bell Laboratories Room 2G-513A
101 Crawfords Corner Road
Holmdel, NJ 07733-9965

Contents

About This Document xxxiii

- Purpose xxxiii
- Intended Audiences xxxiv
- Reason for Reissue xxxiv
- How to Use the Document xxxiv
- Conventions xxxvii
- Product Safety Labels xxxix
- Optional Equipment xl
- Related Documentation xl
- Training xlii
- Technical Support xliii
- How to Order Documents xliii
- How to Comment on This Document xlv

1 New Features 1-1

- Benefits 1-1
- Features 1-1
  - EDSX for STS-1 Signals 1-2
  - Improved Alarm Reporting and Clearing 1-4
  - **DACSmate** and DACSlink Connection 1-4
  - Increased User ID (UID) Length 1-5
  - Increased Alternate Map Capability 1-5
- ISO-9001 1-5

2 Frame Communications 2-1

- Link Administration 2-1
  - User ID Creation and Deletion 2-2
  - Changes to User IDs, Passwords, and Other Parameters 2-3

Contents

Link, Terminal, and Printer Settings 2-6
Preventing CILINK-4 Communication Problems 2-10
- Logging on and Logging off the System 2-11
  - Logging on to the System 2-11
  - Logging off the System 2-13
- Commands and Messages 2-14
  - Commands 2-14
  - Command Acknowledgments 2-17
  - Messages 2-18
- Menu/Prompt Mode 2-19
- Security Audit Feature 2-22

3 **Safety Precautions and Circuit Pack Handling** 3-1
- Equipment Precautions 3-2
  - Electrostatic Discharge 3-2
  - Circuit Pack Handling 3-2
- Circuit Pack Installation and Removal 3-4
  - Input, Output, DS3SW CTR, PRI3 and SEC3 Circuit Packs 3-4
  - DS3SWL CTR Circuit Pack for 2048-Size Systems 3-9
  - Main Controller (MC) Module Circuit Packs 3-16
- Line Buildout Settings 3-18
- Disk Drives, Optical Drives and Optical Cartridges 3-22
  - Disk Drive and Optical Drive Handling 3-22
  - Optical Cartridge Handling 3-22
  - Optical Cartridge Description 3-23
  - Optical Cartridge Insertion and Removal 3-27
  - Spare PRI3 and SEC3 Circuit Pack Verification 3-33
- Circuit Pack Returns 3-45

Contents

4 Acceptance 4-1

- Perform Visual Inspection 4-2
- Check I/O Bay(s) 4-4
- Check Switch Bay(s) 4-10
- Initialize System and Load Software 4-12
- Set System Date and Time 4-13
- Check Unused Snider Links 4-14
- Provision I/O Bay(s) 4-16
- Test Frame Alarms 4-22
- Test Cable Between I/O Bays 4-26
- Verify External Cables 4-31
- Check Protection Switch Function 4-32
- Test Alarm and Telemetry Outputs 4-35
- Test Fan Units on 2048-size System 4-40
  - Testing the High Performance ED9C130-30,G3 Fan Unit 4-41
  - Testing the Standard ED2C906-30,G1 Fan Unit 4-46

5 Provisioning 5-1

- Provisionable Features and Their Defaults 5-2
- Alarm Indication Signal Detection (AISDET) Provisioning 5-4
- Alternate Maps 5-6
  - Alternate Map Creation 5-9
  - Alternate Map File Changes 5-11
  - Alternate Map Deletion 5-13
  - Alternate Map Retrieval 5-14
  - Alternate Map Execution 5-15
- Circuit Connection Provisioning 5-16
  - One-Way Cross-Connections 5-17
  - Two-way Cross-Connections 5-20
  - Rollover Connections 5-23

Contents

1x2 (Bridge) Broadcast Cross-Connections 5-25
Multiple Port (Conference) Broadcast Cross-Connections 5-27
Loopbacks 5-33
- Command Verification Provisioning 5-34
  - Using Command Verification 5-36
- Critical Alarm Provisioning 5-37
- Database Capture Buffer Provisioning 5-38
- Performance Monitoring Preparations 5-39
  - Performance Monitoring Provisioning 5-39
  - Performance Monitoring Thresholds 5-41
  - Bipolar Violation Error Rate Thresholds 5-44
- Performance Monitoring Use 5-45
  - Schedule and Report Counts 5-45
  - Inhibit Reports for Specific Ports 5-48
  - Allow Reports for Specific Ports 5-49
  - Cancel Reports for Specific Ports 5-50
  - Cancel Reports Using ID Numbers 5-51
- Equipment Provisioning 5-53
  - Manual Provisioning 5-53
- Facility Provisioning 5-55
- Fault Isolation Provisioning 5-56
- I/O Bay Provisioning 5-57
- I/O Bay Deprovisioning 5-62
- Manual Protection Indicator Provisioning 5-65
- Media Validation 5-66
- Message Set Provisioning 5-68
- Test Access Auto-Release Provisioning 5-70

Contents

6 Component Replacement and Equipment Upgrades 6-1

- Add STS-1 or DS3 Circuit Packs 6-3
- Remove STS-1 or DS3 Circuit Packs 6-12
- Add and Remove Craft Interface Terminals 6-14
- Replace DS3OUT with AISDET Circuit Packs 6-16
- Replace AISDET with DS3OUT Circuit Packs 6-19
- Change LBO on Traffic-Carrying Output Interface Circuit Packs 6-21
- Convert an Input/Output Bay from a DS3 to an STS-1 Signal Type 6-25
- Convert an Input/Output Bay from an STS-1 to a DS3 Signal Type 6-36

7 Facilities Testing 7-1

- Test Set Connections 7-2
  - Incoming Circuits and Receivers 7-2
  - Outgoing Circuits and Transmitters 7-5
- Test Access Connections 7-10
  - Establishing Test Access Connections 7-10
  - Split Test Access to Monitor Test Access Conversion 7-14
  - Disconnecting Test Access Connections 7-15
- Loopbacks 7-18

8 Routine Maintenance 8-1

- Optical Drive Lens Cleaning 8-3
- Optical Cartridge Cleaning 8-11
  - Optical Cartridge Cleaning Kit 8-11
- Memory Backups 8-17

Contents

Memory Backup Command Format 8-17
Manual Backup of a Release to Optical Cartridge 8-18
Automatic Backups to Optical Cartridge 8-24
- Fan Units 8-26
  Standard Fan Unit (ED2C906-30,G1) 8-26

9 **Troubleclearing—General** 9-1
- Error Detection 9-2
  Alarms 9-2
- Problems Identified Through Alarms 9-3
- AISFRAMED, AISUNFRAMED, ISD, MON, and MRB 9-11
- LOF, LSSIG, LOS, T+BPV, T-BERL, and INDET 9-12
- BADLBO 9-13
- BADPRMTR 9-17
- IMPROPRMVL 9-18
- INHSWPR 9-20
- INHSWWKG 9-21
- INT on Main Controller (MC) Module Circuit Packs 9-23
- INT or MISC [100] on Input, Output, or DS3SW Circuit Packs 9-25
- INT on Standard Fan Units (ED2C906-30,G1) 9-31
- INT on High Performance Fan Units (ED9C130-30,G3) 9-34
- INT and Other PWRA (552A) Failures 9-38
- INT on PWRA2 (566A) Circuit Packs 9-40
- INT and Other PWRB, PWRC, and PWRD Failures 9-67
- INT on Unit Controllers (UC) 9-69
- INT Condition Type on an Input or Output Interface Circuit Pack and a Unit Controller (UC) 9-70
- MAN 9-73
- MISC [1] 9-75
- MISC [2] 9-76

Contents

- TODC 9-77
- EXTERR 9-78
- FRD 9-79
- HITEMP 9-81
- Problems Not Identified Through Alarms 9-82
- Blown Primary Fuse for BUS E 9-82
- Blown Primary Fuse for All Other BUSes Except Bus E 9-83
- Blown Secondary Fuse in the Main Controller (MC) Module 9-91
- Blown Secondary Fuse in Switch Power Module 9-93
- REPT CMPR MEM Messages 9-98
- REPT EXCPTN SYS Messages 9-99
- Transmission Problems Reported by Personnel 9-102
- Replacing an FBE Fuse Board in the MC 9-106
- Clearing DEPROVSLOT 9-110

10 Troubleclearing—Secondary Storage Subsystem 10-1

- INT Condition Type on DISKA, DISKB, and SEC 10-1

11 Troubleclearing—DS3 Fault Isolation 11-1

- PAINTGRT Condition Type for DS3 Circuit Packs 11-1

12 Troubleclearing—STS-1 Fault Isolation 12-1

- PAINTGRT Condition Type for STS-1 Circuit Packs 12-1

Contents

A Administrative Information A-1

- Customer Assistance A-1
- Documentation Orders A-2
- Product Orders A-2
- Equipment Returns A-2

B Product Description B-1

- DACS III-2000 System Overview B-1
- Capacity, Growth, and Protection—DACS III-2000 (1024) B-5
- Capacity, Growth, and Protection—DACS III-2000 (2048) B-8
- Bays and Basic Modules B-11
- Circuit Packs B-12
- Main Controller (MC) Module B-13
  - Main Controller (MC) Module Circuit Packs B-14
  - Status Panel B-17
  - System Interfaces and Internal Communication B-20
  - Interface Connectors B-22
  - Alarm Closure and Remote Reset Function Connector Panel B-25
- Input Interface Module B-26
  - Circuit Pack Descriptions B-26
  - Circuit Pack Quantities B-30
  - Circuit Pack Interfaces B-33
- Switch Module B-33
  - Switch Module—DACS III-2000 (1024) System B-34
  - Switch Module—DACS III-2000 (2048) System B-36
- Output Interface Module B-38
  - Circuit Pack Descriptions—Output Interface Module B-38
  - Circuit Pack Quantities B-42
  - Circuit Pack Interfaces B-45

Contents

- Switch Power (SW PWR) Module B-46
  - Switch Power Module—DACS III-2000 (1024) B-46
  - Switch Power Module—DACS III-2000 (2048) B-48
- Power Feed to the System B-49
  - Single Power Feed B-49
  - Dual Power Feed B-50
- Fuse and Alarm Panel B-54
- Cooling B-54
  - Cooling a DACS III-2000 (1024) System B-54
  - Cooling a DACS III-2000 (2048) System B-54
- Optional Hardware B-57
  - BNC Interconnect Panel B-57
  - Electromagnetic Interference (EMI) Shields B-57

C **Error Codes** C-1
- Error Codes C-1

D **Acronyms and Abbreviations** D-1

GL **Glossary** GL-1

IN **Index** IN-1

Contents

Figures

2 **Frame Communications** 2-1

2-1. Interface Connector Panel 2-7

3 **Safety Precautions and Circuit Pack Handling** 3-1

3-1. Installing Circuit Packs—Step 3 3-5
3-2. Installing Circuit Packs—Step 4 3-6
3-3. Installing Circuit Packs—Step 5 3-7
3-4. Installing Circuit Packs—Step 6 3-7
3-5. Installing Circuit Packs—Step 7 3-8
3-6. Installing DS3SWL CTR Circuit Packs—Step 1 3-10
3-7. Installing DS3SWL CTR Circuit Packs—Step 2 3-11
3-8. Installing DS3SWL CTR Circuit Packs—Step 3 3-12
3-9. Installing DS3SWL CTR Circuit Packs—Step 4 3-13
3-10. Installing DS3SWL CTR Circuit Packs—Step 5 3-14
3-11. Line Buildout OUT Settings 3-20
3-12. Line Buildout IN Settings 3-21
3-13. Optical Cartridge—Front View 3-24
3-14. Optical Cartridge—Back Views 3-26
3-15. Inserting an Optical Cartridge 3-28
3-16. Using the Emergency Eject Tool 3-31
3-17. Removing an Optical Cartridge 3-32

4 **Acceptance** 4-1

4-1. DS3IN Interface Module with Single Power Feed 4-6
4-2. STS1IN Interface Module with Single Power Feed 4-7
4-3. DS3OUT Interface Module with Single Power Feed 4-8
4-4. STS1OUT Interface Module with Single Power Feed 4-9
4-5. Main Controller Module—DACS III-2000 (2048) 4-11

Figures

4-6. DACS III-2000 1024-size System—Unit Numbers 4-16
4-7. DACS III-2000 2048-size System—Unit Number 4-17
4-8. High Performance Fan Unit (ED9C130-30,G3)—DACS III-2000 (2048) 4-41
4-9. Standard Fan Unit (ED2C906-30,G1)—DACS III-2000 (2048) 4-46

5 **Provisioning** 5-1
5-1. DACS III-2000 (1024)—Unit Numbers 5-57

6 **Component Replacement and Equipment Upgrades** 6-1
6-1. DS3IN Interface Module with Single Power Feed 6-6
6-2. STS1IN Interface Module with Single Power Feed 6-7
6-3. Line Buildout (LBO) OUT Settings 6-8
6-4. Line Buildout (LBO) IN Settings 6-9
6-5. DS3OUT Interface Module with Single Power Feed 6-10
6-6. STS1OUT Interface Module with Single Power Feed 6-11

7 **Facilities Testing** 7-1
7-1. Connected Test Port and Input Port 7-11
7-2. Split Connection 7-13

8 **Routine Maintenance** 8-1
8-1. Using the Emergency Eject Tool 8-5
8-2. Removing an Optical Cartridge 8-6
8-3. Optical Drive Lens Cleaning Cartridge—Shutter Closed 8-7

Figures

8-4. Optical Drive Lens Cleaning Cartridge—Shutter Open 8-8
8-5. Inserting a Lens Cleaning Cartridge into Optical Drive 8-9
8-6. Optical Cartridge Cleaning Kit Components 8-11
8-7. Exposing the Optical Cartridge Disk Surface 8-12
8-8. Attaching the Turning Knob to the Optical Cartridge 8-13
8-9. Rotating the Turning Knob on an Optical Cartridge 8-14
8-10. Wiping the Disk Surface of an Optical Cartridge 8-15
8-11. Standard Fan Unit (ED2C906-30,G1) 8-27

9 Troubleclearing—General 9-1
9-1. Line Buildout OUT Settings 9-15
9-2. Line Buildout IN Settings 9-16
9-3. New Power Circuit Pack (566A) and Extender (567A) 9-40
9-4. Dual Power Feed Circuit Packs in an I/O Bay—Front View 9-41
9-5. Dual Power Feed Circuit Packs in a 1024-size Switch Bay 9-42
9-6. Dual Power Feed Circuit Packs in a 2048-size Switch Bay 9-42
9-7. Locking Mechanism on PWRA2 EXT (567A) Circuit Pack 9-52

B Product Description B-1
B-1. DACS III-2000 (1024) System B-2
B-2. DACS III-2000 (2048) System B-3
B-3. DACS III-2000 Basic Parts B-4
B-4. DACS III-2000 (1024) System—Minimum Configuration B-5
B-5. DACS III-2000 (1024) System—Maximum Configuration B-6
B-6. DACS III-2000 (2048) System—Minimum Configuration B-8
B-7. DACS III-2000 (2048) System—Maximum Configuration B-9
B-8. Typical Circuit Pack B-12
B-9. Main Controller (MC) Module—DACS III-2000 (2048) System B-15
B-10. Enhanced Status Panel B-19

Figures

B-11. Main Controller—Functional Diagram B-21

B-12. Interface Connector Panel B-23

B-13. Alarm Closure and Remote Reset Function Connector Panel B-25

B-14. Input Interface Module—Functional Diagram B-27

B-15. DS3IN Interface Module with Single Power Feed B-31

B-16. STS1IN Interface Module with Single Power Feed B-32

B-17. Switch Module—Functional Diagram B-34

B-18. Switch Module—DACS III-2000 (1024) System B-35

B-19. Switch Module—DACS III-2000 (2048) System B-37

B-20. Output Interface Module—Functional Diagram B-39

B-21. DS3OUT Interface Module with Single Power Feed B-43

B-22. STS1OUT Interface Module with Single Power Feed B-44

B-23. SW PWR Module—DACS III-2000 (1024)—Single Power Feed B-47

B-24. SW PWR Module—DACS III-2000 (2048)—Single Power Feed B-48

B-25. New Power Circuit Pack (566A) and Extender (567A) B-51

B-26. Dual Power Feed Circuit Packs in an I/O Bay B-52

B-27. SW PWR Module—DACS III-2000 (1024)—Dual Power Feed B-53

B-28. SW PWR Module—DACS III-2000 (2048)—Dual Power Feed B-53

B-29. High Performance Fan Unit—DACS III-2000 (2048) B-56

B-30. Front View—EMI Shields on a DACS III-2000 (1024) System B-58

B-31. EMI Shield Status Panel B-59

Tables

About This Document

1. Ordering Documentation xliv

1 New Features 1-1

1-1. STS-1 Circuit Packs 1-2

2 Frame Communications 2-1

2-1. Entity Identifiers for the 1024-size System 2-15
2-2. Entity Identifiers for the 2048-size System 2-16
2-3. Command Acknowledgments 2-17
2-4. Message Priority Action Codes 2-18

3 Safety Precautions and Circuit Pack Handling 3-1

3-1. LBO Settings for Connections to DSX-3 3-19
3-2. LBO Settings for Connections to Terminal Equipment 3-19

4 Acceptance 4-1

4-1. Link Connector Locations 4-14
4-2. LED Test Sequence 4-20
4-3. Input Circuit Pack States for TEST-CABLE 4-26
4-4. Output Circuit Pack States for TEST-CABLE 4-27
4-5. Protection Circuit Pack States for TEST-CABLE 4-27

Tables

5 **Provisioning** 5-1

5-1. Provisionable Features—Default Settings and Setting Options 5-2

5-2. Commands Used with Alternate Maps 5-8

5-3. Performance Monitoring Parameters 5-41

5-4. Initial Performance Monitoring Parameter Threshold 5-42

5-5. Provisionable Performance Monitoring Parameter Thresholds 5-43

5-6. Monitored Parameter Values 5-47

5-7. LED Test Sequence 5-60

6 **Component Replacement and Equipment Upgrades** 6-1

6-1. LBO Settings for Connections to DSX-3 6-5

6-2. LBO Settings for Connections to Terminal Equipment 6-5

9 **Troubleclearing—General** 9-1

9-1. Alarm Levels and Related Output Message Parameters 9-2

9-2. Prioritizing Alarm Clearance 9-5

9-3. RTRV-ALM-{EC1|T3} and RTRV-ALM-LINK Decision Tree 9-7

9-4. RTRV-ALM-EQPT Decision Tree 9-8

9-5. LBO Settings for Connections to DSX-3 9-13

9-6. LBO Setting for Connections to Terminal Equipment 9-14

9-7. Fan Unit-Fuse Relationship for Standard Fan Unit (ED2C906-30,G1) 9-32

9-8. Fan Unit-Fuse Relationship for High Performance Fan Unit (ED9C130-30,G3) 9-35

9-9. Next Step to Go to in Procedure 9-15 9-45

9-10. Load Sharing for Input or Output Modules—V1 Output 9-58

Tables

9-11. Load Sharing for Input or Output Modules—V2 Output 9-60

9-12. Load Sharing for DS3SW PWR Modules with Two Power (566A) Circuit Packs— V1 Output 9-61

9-13. Load Sharing for DS3SW PWR Modules with Two Power (566A) Circuit Packs—V2 Output 9-62

9-14. Load Sharing for DS3SW PWR Modules with Four Power (566A) Circuit Packs— V1 Output 9-63

9-15. Load Sharing for DS3SW PWR Modules with Four Power (566A) Circuit Packs— V2 Output 9-64

9-16. Power Unit Alarms Associated with Feeders for DACS III-2000 (1024) 9-65

9-17. Power Unit Alarms Associated with Feeders for DACS III-2000 (2048) 9-66

9-18. BUS/Fuse Chart--DACS III-2000 (1024) 9-85

9-19. BUS/Fuse Chart—DACS III-2000 (2048) 9-87

9-20. Main Controller Module Fuse Board (FBE) Fuse Designations—(1024) and (2048) Systems 9-91

9-21. DS3SW CTR Fuse Chart—(1024) System 9-95

9-22. DS3SW CTR Fuse Chart—(2048) System 9-96

10 Troubleclearing—Secondary Storage Subsystem 10-1

10-1. DISKA, DISKB, and SEC Failure Decision Tree 10-2

11 Troubleclearing—DS3 Fault Isolation 11-1

11-1. PAINTGRT Decision Tree 11-4

Tables

12	**Troubleclearing—STS-1 Fault Isolation**	12-1
	12-1. PAINTGRT Decision Tree	12-4
B	**Product Description**	B-1
	B-1. Protection Ratios—DACS III-2000 (1024)	B-7
	B-2. Protection Ratios—DACS III-2000 (2048)	B-10
	B-3. Bays and Their Basic Modules and Equipment	B-11
	B-4. Main Controller (MC) Module Components	B-14
	B-5. Administrative Link Information	B-22
	B-6. TTY Adaptors—Equipment Codes and Uses	B-24
	B-7. Input Interface Circuit Packs	B-30
	B-8. Output Interface Circuit Packs	B-42
	B-9. Switch Power Module and Circuit Packs	B-46
	B-10. Alarm Conditions on New Fan Unit	B-55

Procedures

2 Frame Communications

2-1. Creating User IDs 2-2
2-2. Deleting User IDs 2-3
2-3. Changing User IDs, Passwords, and Other Parameters 2-4
2-4. Changing Administrative Links when Only One Snider Link is Connected 2-7
2-5. Changing Administrative Links When Two or More Snider Links are Connected 2-9
2-6. Logging on over a Snider Link 2-11
2-7. Logging on over an X.25 Link 2-12
2-8. Logging off the System 2-13
2-9. Managing Security Audit Information 2-22

3 Safety Precautions and Circuit Pack Handling

3-1. Installing Circuit Packs 3-4
3-2. Removing Circuit Packs 3-9
3-3. Installing DS3SWL CTR Circuit Packs 3-10
3-4. Removing DS3SWL CTR Circuit Packs 3-15
3-5. Replacing Main Controller (MC) Module Circuit Packs 3-16
3-6. Setting Line Buildout (LBO) 3-18
3-7. Inserting Optical Cartridges 3-27
3-8. Removing Optical Cartridges 3-29
3-9. Verifying Spare PRI3 Circuit Packs (DISKA) 3-33
3-10. Verifying Spare SEC3 Circuit Packs (DISKB and SEC) 3-37
3-11. Returning Circuit Packs for Repair 3-45

Procedures

4 Acceptance

4-1. Performing Visual Inspections 4-2
4-2. Checking I/O Bay(s) 4-4
4-3. Checking Switch Bay(s) 4-10
4-4. Setting System Date and Time 4-13
4-5. Checking Unused Snider Links 4-14
4-6. Provisioning I/O Bay(s) 4-18
4-7. Testing Frame Alarms 4-22
4-8. Testing Cable Between I/O Bays 4-28
4-9. Checking Protection Switch Function 4-32
4-10. Testing Alarm and Telemetry Outputs 4-35
4-11. Testing High Performance Fan Units (ED9C130-30,G3) 4-42
4-12. Testing Standard Fan Units (ED2C906-30,G1) 4-47

5 Provisioning

5-1. Provisioning Alarm Indication Signal Detection (AISDET) 5-4
5-2. Creating Alternate Map Files 5-9
5-3. Changing Alternate Map Files 5-11
5-4. Deleting Alternate Map Files 5-13
5-5. Retrieving Alternate Maps 5-14
5-6. Executing Alternate Maps 5-15
5-7. Establishing One-Way Cross-Connections 5-17
5-8. Retrieving One-Way Cross-Connections 5-18
5-9. Disconnecting One-Way Cross-Connections 5-19
5-10. Establishing Two-way Cross-Connections 5-20
5-11. Retrieving Two-way Cross-Connections 5-21
5-12. Disconnecting Two-way Cross-Connections 5-22
5-13. Establishing Rollover Cross-Connections 5-23
5-14. Retrieving Rollover Cross-Connections 5-24

Procedures

5-15. Establishing 1x2 (Bridge) Broadcast Cross-Connections 5-25

5-16. Retrieving 1x2 (Bridge) Broadcast Cross-Connections 5-26

5-17. Disconnecting 1x2 (Bridge) Broadcast Cross-Connections 5-26

5-18. Provisioning Multiple Port (Conference) Broadcast for Traffic Rearrangement 5-27

5-19. Preventing Multiple Port (Conference) Broadcast from Rearranging Traffic 5-28

5-20. Entering Multiple Port (Conference) Broadcast Leg(s) 5-28

5-21. Retrieving Multiple Port (Conference) Broadcast Leg(s) 5-32

5-22. Deleting Multiple Port (Conference) Broadcast Leg(s) 5-32

5-23. Setting Command Verification Mode 5-34

5-24. Provisioning Critical Alarms 5-37

5-25. Provisioning Database Capture Buffer 5-38

5-26. Retrieving Messages from Database Capture Buffer 5-38

5-27. Provisioning Performance Monitoring 5-39

5-28. Setting Performance Monitoring Thresholds 5-42

5-29. Setting Bipolar Violation Error Rate Thresholds 5-44

5-30. Scheduling Performance Monitoring Counts 5-45

5-31. Inhibiting Performance Monitoring Reports 5-48

5-32. Allowing Performance Monitoring Reports 5-49

5-33. Canceling Performance Monitoring Reports on Specified Ports 5-50

5-34. Canceling Performance Monitoring Reports Using an ID Number 5-51

5-35. Provisioning I/O Interface Equipment Manually 5-53

5-36. Provisioning Fault Isolation 5-56

5-37. Provisioning I/O Bay(s) 5-57

5-38. Deprovisioning I/O Bay(s) 5-62

5-39. Setting Manual Protection Indicator Switching 5-65

Procedures

5-40. Checking System Identification 5-67
5-41. Establishing Test Access Cross-Connects 5-70
5-42. Changing Test Access Auto-Release Setting 5-71

6 Component Replacement and Equipment Upgrades

6-1. Adding Interface Circuit Packs to In-Service Frames 6-3
6-2. Removing Interface Circuit Packs from Service 6-12
6-3. Adding Craft Interface Terminals 6-14
6-4. Removing Craft Interface Terminals 6-15
6-5. Replacing DS3OUT Interface Circuit Packs with AISDET Circuit Packs 6-16
6-6. Replacing AISDET Circuit Packs with DS3OUT Interface Circuit Packs 6-19
6-7. Changing Line Buildout (LBO) Settings on an Output Interface Circuit Pack Carrying Traffic 6-21
6-8. Converting a DS3 I/O Bay to an STS-1 I/O Bay 6-25
6-9. Converting an STS-1 I/O Bay to a DS3 I/OBay 6-36

7 Facilities Testing

7-1. Connecting Test Set Receivers to the Frame for Testing Incoming Circuits 7-2
7-2. Disconnecting Test Set Receivers from the Frame and Incoming Circuits 7-4
7-3. Connecting Test Set Transmitters to the Frame for Testing Outgoing Circuits 7-5
7-4. Disconnecting Test Set Transmitters from the Frame and Outgoing Circuits 7-8
7-5. Establishing Monitor Test Access Connections 7-10
7-6. Establishing Split Test Access Connections 7-12
7-7. Changing from Split Test Access to Monitor Test Access 7-14
7-8. Disconnecting Monitor Test Access Connections 7-15
7-9. Operating Loopbacks 7-18
7-10. Releasing Loopbacks 7-19

Procedures

8 Routine Maintenance

8-1. Cleaning the Optical Drive Lens 8-3
8-2. Cleaning Optical Cartridges 8-12
8-3. Making Backups to Optical Cartridges 8-19
8-4. Scheduling Automatic Backups to Optical Cartridges 8-24
8-5. Maintaining Standard (ED2C906-30,G1) Fan Units 8-28

9 Troubleclearing—General

9-1. How to Clear Alarms 9-3
9-2. Clearing AISFRAMED, AISUNFRAMED, ISD, MON, and MRB Condition Types 9-11
9-3. Clearing LOF, LSSIG, LOS, T+BPV, T-BERL, and INDET Condition Types 9-12
9-4. Clearing BADLBO Condition Type 9-13
9-5. Clearing BADPRMTR Condition Type 9-17
9-6. Clearing IMPROPRMVL Condition Type 9-18
9-7. Clearing INHSWPR Condition Type 9-20
9-8. Clearing INHSWWKG Condition Type 9-21
9-9. Clearing INT Condition Type on Main Controller (MC) Module Circuit Packs 9-23
9-10. Clearing INT or MISC [100] Condition Types on Input or Output Interface Circuit Packs 9-25
9-11. Clearing INT or MISC [100] Condition Types on DS3SW Circuit Packs 9-27
9-12. Clearing INT Condition Type on DS3PROTN and STS1PROTN Circuit Packs. 9-29
9-13. Clearing INT Condition Type on Standard Fan Units 9-31
9-14. Clearing INT Condition Type on High Performance Fan Units 9-34
9-15. Clearing INT Condition Type and Other PWRA (552A) Failures in Input, Output, or DS3SW Modules 9-38
9-16. Clearing INT Condition Type on PWRA2 (566A) Circuit Packs in Input, Output, and DS3SW Modules 9-43

9-17. Clearing INT Condition Type and Other PWRB, PWRC, and PWRD Failures in Main Controller Modules 9-67
9-18. Clearing INT Condition Type on Unit Controllers (UC) 9-69
9-19. Clearing INT Condition Type on Input and Output Interface Circuit Packs, and a Unit Controller (UC) 9-70
9-20. Clearing MAN Condition Type 9-73
9-21. Clearing MISC [1] Condition Type 9-75
9-22. Clearing MISC [2] Condition Type 9-76
9-23. Clearing TODC Condition Type 9-77
9-24. Clearing EXTERR Condition Type 9-78
9-25. Clearing FRD Condition Type 9-79
9-26. Clearing HITEMP Condition Type 9-81
9-27. Clearing Blown Primary (-48V) Fuse for BUS E 9-82
9-28. Clearing Blown Primary (-48V) Fuse for All Other BUSes Except BUS E 9-83
9-29. Clearing Blown Secondary Fuse in Main Controller (MC) Module 9-91
9-30. Clearing Blown Secondary Fuse in Switch Power Modules 9-93
9-31. Responding to REPT CMPR MEM Message 9-98
9-32. Responding to REPT EXCPTN SYS 9-100
9-33. Clearing Transmission Problems Reported by Personnel 9-102
9-34. Replace an FBE Fuse Board in the MC 9-106
9-35. Clearing DEPROVSLOT 9-110

10 Troubleclearing—Secondary Storage Subsystem

10-1. Recovering from DISKA Failure when DISKB and SEC are In-Service 10-3
10-2. Recovering from DISKB Failure when DISKA and SEC are In-Service 10-7
10-3. Recovering from Failure of DISKA and DISKB when SEC is In-Service 10-13

10-4. Recovering from SEC Failure when DISKA and DISKB are In-Service 10-29

10-5. Recovering from SEC and DISKA Failure when DISKB is In-Service 10-34

10-6. Recovering from SEC and DISKB Failure when DISKA is In-Service 10-43

11 Troubleclearing—DS3 Fault Isolation

11-1. Clearing PAINTGRT Condition Type on DS3IN, DS3OUT, and DS3SW Circuit Packs 11-2

11-2. DS3IN:MN,PAINTGRT Alarm with No Other DS3IN or DS3SW Circuit Packs Showing PAINTGRT 11-5

11-3. DS3OUT:MN,PAINTGRT Alarm with No Other DS3OUT or DS3SW Circuit Packs Showing PAINTGRT 11-21

11-4. DS3IN:MN,PAINTGRT and DS3SW:MN,PAINTGRT Alarms with No Other DS3IN or DS3SW Circuit Packs Showing PAINTGRT 11-38

11-5. DS3IN:MJ,PAINTGRT and DS3SW:MN,PAINTGRT Alarms with No Other DS3IN or DS3SW Circuit Packs Showing PAINTGRT 11-49

11-6. DS3IN:MJ,PAINTGRT, DS3IN:MN,PAINTGRT and DS3SW:MN,PAINTGRT Alarms with No Other DS3IN or DS3SW Circuit Packs Showing PAINTGRT 11-65

11-7. DS3OUT:MN,PAINTGRT and DS3SW:MN,PAINTGRT Alarms with No Other DS3OUT or DS3SW Circuit Packs Showing PAINTGRT 11-73

11-8. DS3OUT:MJ,PAINTGRT and DS3SW:MN,PAINTGRT Alarms with No Other DS3OUT or DS3SW Circuit Packs Showing PAINTGRT 11-84

11-9. DS3OUT:MJ,PAINTGRT, DS3OUT:MN,PAINTGRT, and DS3SW:MN,PAINTGRT Alarms with No Other DS3OUT or DS3SW Circuit Packs Showing PAINTGRT 11-100

11-10. DS3SW:MN,PAINTGRT Alarm with No DS3IN or DS3OUT Circuit Packs or Other DS3SW Circuit Packs Showing PAINTGRT 11-108

12 Troubleclearing—STS-1 Fault Isolation

12-1. Clearing PAINTGRT Condition Type on STS1IN, STS1OUT, and DS3SW Circuit Packs 12-2

12-2. STS1IN:MN,PAINTGRT and STS1OUT:MN,PAINTGRT Alarms with No OtherCircuit Packs Showing PAINTGRT 12-5

12-3. STS1OUT:MN,PAINTGRT Alarm with No Other Circuit Packs Showing PAINTGRT 12-22

12-4. STS1IN:MN, PAINTGRT and DS3SW:MN,PAINTGRT, and STS1OUT:MN,PAINTGRT Alarms with No Other Circuit Packs Showing PAINTGRT 12-38

12-5. STS1IN:MN,PAINTGRT and DS3SW:MN,PAINTGRT Alarms with No Other Circuit Packs Showing PAINTGRT 12-55

12-6. STS1OUT:MN,PAINTGRT and DS3SW:MN,PAINTGRT Alarms with No OtherCircuit Packs Showing PAINTGRT 12-76

12-7. STS1IN:MN,PAINTGRT Alarm with No Other Circuit Packs Showing PAINTGRT 12-97

About This Document

Purpose

DACS III-2000, Release 4.0, Operations and Maintenance has been written to meet the following objectives:

- to inform users, system administrators, and support personnel about new Release 4.0 features and their effect on operations and/or maintenance tasks
- to inform users, system administrators, and support personnel about the operations and maintenance of the DACS III-2000 system
- to present step-by-step procedures for correcting system problems
- to provide installers with clear acceptance testing procedures.

The procedures presented in this document are to be used with Release 4.0 only. If you have an earlier release or generic, refer to the documentation provided with that release.

Intended Audiences

This document is for anyone involved with operating and maintaining a DACS III-2000 system, including

- craft
- system administrators
- support personnel
- installers.

DACS III-2000, Release 4.0, Operations and Maintenance is written for *all* DACS III-2000 Release 4.0 customers. You may find that some parts of this document do not pertain to your particular work environment. (For example, some customers never use *Message Set 2* or the term "system administrator.")

Reason for Reissue

The contents of this document have been revised to include information about new Release 4.0 features.

How to Use the Document

A brief description of each chapter's contents is provided below.

- "About This Document"

  This section describes the document's purpose, intended audience, the reason for reissue, and the conventions used. This section also defines the product safety labels and provides examples of the picture symbols that accompany each label. Related equipment requirements, documentation and training, ordering information, and the process for providing comments on the document are also included.

- Chapter 1, "New Features"

  This chapter describes the new Release 4.0 features.

- Chapter 2, "Frame Communications"

  This chapter provides information needed to communicate with the frame: logon and logoff procedures, basic information about commands and messages, link administration, the system's on-line help, changes to terminal settings, and the security audit feature.

- Chapter 3, "Safety Precautions and Circuit Pack Handling"

  This chapter provides information and procedures that are referenced throughout this document: equipment precautions, circuit pack insertion and removal instructions, optical drive and optical cartridge handling, line buildout, and circuit pack returns for repair.

- Chapter 4, "Acceptance"

  This chapter provides the system acceptance testing procedures that are used after the initial installation of a DACS III-2000 frame. Acceptance testing covers both the hardware and software that come with the system.

- Chapter 5, "Provisioning"

  This chapter provides procedures for provisioning the various elements of the system: equipment, circuits, alarms, manual protection, test access auto-release, command verification, conferences, line performance monitoring, alternate maps, and fault isolation.

- Chapter 6, "Component Replacement and Equipment Upgrades"

  This chapter provides information for making physical, as opposed to software, changes to the system. Included are procedures for adding and removing circuit packs from an in-service frame, adding and removing craft interface terminals, exchanging DS3 output (DS3OUT) and alarm indication signal detection (AISDET) circuit packs, adding new I/O bays, changing an input/output bay from one signal type to the other, and deprovisioning an existing bay.

- Chapter 7, "Facilities Testing"

  This chapter provides procedures that are used in the testing of facilities. The procedures cover test connections, test sets, split access and monitor test access, loopbacks, and line performance monitoring.

- Chapter 8, "Routine Maintenance"

  This chapter provides procedures that are preventive in nature and that should be conducted on a scheduled basis. Information on the following maintenance tasks is presented: memory backups, fan units, optical drive, optical cartridge, and power circuit packs.

- Chapter 9, "Troubleclearing—General"

  This chapter provides the procedures for correcting problems encountered on a DACS III-2000 system. The chapter provides procedures for responding to alarms, diagnostic failures, and error messages that indicate problems with fuses, fans, and circuit packs. The procedure for restoring the hard disk drives and optical drive after a fuse replacement is also included.

- Chapter 10, "Troubleclearing—Secondary Storage Subsystem"

  This chapter provides the procedures for correcting problems encountered with the secondary storage subsystem.

- Chapter 11, "Troubleclearing—DS3 Fault Isolation"
- This chapter provides the procedures for correcting problems on DS3 signal paths isolated by the fault isolation feature.
- Chapter 12, "Troubleclearing—STS-1 Fault Isolation"

  This chapter provides the procedures for correcting problems on STS-1 signal paths isolated by the fault isolation feature.
- Appendix A, "Administrative Information"

  This appendix provides information about the product warranty, AT&T technical support, extended technical support, and value-added services.
- Appendix B, "Product Description"

  This appendix describes the DACS III-2000 system and its hardware components. It is included as background information.
- Appendix C, "Error Codes"

  This appendix provides a list of the error codes that you may encounter in messages.
- Appendix D, "Acronyms and Abbreviations"

  This appendix lists the acronyms and abbreviations found in this document along with their meaning.
- Glossary

  This section defines terms that are used in the document.
- Index

  An index is included to help you quickly locate information on any topic that is covered in the document.

Conventions

The following conventions are used in this document:

- to facilitate the location of topics within this document, the chapter title appears in the heading on all left-hand pages while the subject currently under discussion appears in the heading on all right-hand pages
- to identify output that the system generates, the typeface shown in this example is used:

```
    <TID #n YY-MM-DD HH:MM:SS>
M    EXC MAP::<NME:CTAG:ACMD:STAT>: COMPLD
;
```

- to show where the output from your system will vary from the output shown in the examples, angle brackets (<>) have been placed around the parameters; see the example above
- to identify user input, the typeface shown in this example is used:

```
RTRV-PATH-T3::1-3-4;
```

- to denote optional parameters, brackets [ ] are placed around the parameters

  If you enter the parameter, do not type the brackets.

  In the following example, TID, CTAG, and COTY are optional parameters:

```
RTRV-CABLE-T3:[TID]:DS3P:[CTAG]:[COTY];
```

- to show parameters that are required, the parameters are *not* enclosed in brackets [ ]

  In the following example, TOPT is a required parameter whose value may change each time the command is entered:

```
RTRV-PATH-T3::TOPT;
```

  where

  `TOPT` = the TO port, identified by unit-slot-port or DS3SW-unit-slot

- to identify parameters that must be typed exactly as shown, the parameters do *not* appear in brackets and are *not* explained in the "where" section that follows a command

In the following example, NORM is the requested output mode. Notice that it does not appear in the section where the variable parameters are explained nor is it in brackets ([ ]).

```
ED-PRMTR-T3:[TID]:DS3P:[CTAG]:[BPV],[INST],NORM;
```

where

TID = the target identification (optional)

DS3P = the DS3 port; identified by unit-slot-port. Allowable values for unit are 1 through 4 on a 1024-size system or 1 through 8 on a 2048-size system; slot, 1 through 30; port, 1 through 8. (required)

CTAG = the correlation tag (optional)

BPV = the bipolar violation error threshold (optional)

INST = the input status (optional)

- Pipes (|) are used as an "or" sign, indicating that either the value before the pipe or the value after it can be used. For example: ED-PRMTR-{EC|T3} means that either ED-PRMTR-EC1 can be entered as the command, or ED-PRMTR-T3 can be entered.

Product Safety Labels

An admonishment symbol is used to draw your attention to significant conditions that affect the safe use of the system. Three different meanings are associated with the symbol:

- **Danger** indicates the presence of a hazard that *will* cause death or severe personal injury if the hazard is not avoided.
- **Warning** indicates the presence of a hazard that *can* cause death or severe personal injury if the hazard is not avoided.
- **Caution** indicates the presence of a hazard that *will* or *can* cause minor personal injury or property damage if the hazard is not avoided. **Caution** is used for property-damage-only accidents including equipment damage, loss of software, or service interruption.

For example:

WARNING:
Moving fan blades.
Lack of protection guard could lead to injury from rotating fan blades.
Use caution when removing and inserting the air filters.

Optional Equipment

The optional Electromagnetic Interference (EMI) shields are available to provide EMI shielding in compliance with FCC Class A devices.

A high-performance fan unit for the 2048-size system is available. It provides separate warning LEDs for inhibited air flow, filter ajar or missing, fan failure, and problems with the main or auxiliary power.

Related Documentation

The following documents provide additional information about the DACS III-2000 system:

- Title: *DACS III-2000, Release 4.0, Installation Procedures Handbook.*

  Number: IPH 904 for DACS III-2000 (1024)
  IPH 906 for DACS III-2000 (2048)

  Audience: Customers planning to install the equipment

  Content: Customers installation instructions

  Please remember you will be asked to sign a nondisclosure agreement before being allowed to purchase of copy of either *IPRM.*

- Title: *DACS III-2000, Release 4.0, Applications, Planning and Ordering*

  Number: AT&T 365-331-200

  Audience: Network planners and engineers

  Content: Product description, features, benefits, applications, ordering information, and technical information.

- Title: *DACS III-2000, Release 4.0, Commands and Messages*

  Number: AT&T 365-331-202 for *Message Set 1*
  AT&T 365-331-222 for *Message Set 2*

  Audience: Users, system administrators, and support personnel

  Content: Description of each software command and its response along with a description of each system alarm and autonomous message. Reference material such as error codes and state names.

  Message Set 1 supports MML and TL-1, Issue 2.
  Message Set 2 supports TL-1, Issue 4 and is used for operations systems that support that standard, including Bell Communications Research's Network Monitoring and Analysis (NMA) and Operations System/Intelligent Network Element (OPS/INE).

- Title: *DACS III-2000, Release 4.0, Quick Reference*

  Number: AT&T 365-331-203

  Audience: Users, system administrators, and support personnel

  Content: Job aid listing commands and other information.

- Title: *DACS III-2000, Release 4.0, Software Release Description*

  Audience: Personnel responsible for upgrading

  Content: Software installation and upgrade procedures, and operating issues.

NOTE:
To order copies of the *Software Release Description*, contact your AT&T Regional Customer Service Center.

The document you are reading can be ordered using the following information:

- Title: *DACS III-2000, Release 4.0, Operations and Maintenance*

  Number: AT&T 365-331-201

  Audience: Users, system administrators, and support personnel

  Content: New feature descriptions, frame communications, safety precautions, circuit pack handling, acceptance testing, provisioning functions, frame modifications, facilities testing, routine maintenance and trouble-clearing procedures.

Training

Training support is provided by the AT&T National Product Training Center in Dublin, Ohio. The following DACS III-2000 training courses are available:

- DG3101—DACS III-2000 Overview

  Course Description: Intended for people responsible for the planning and implementation of DACS III-2000, this two-day course provides an introduction to the DACS III-2000 product.

  Prerequisites: Understanding of digital equipment principles and networks.

- TR3533—DACS III-2000 Operation and Maintenance

  Course Description: Intended for operation and maintenance people and their supervisors, this four-day course provides a comprehensive introduction to the DACS III-2000 system.

  Prerequisites: Experience with digital carrier or DS3 testing or course number TR0510, Transmission Principles.

- DG3130—DACS III-2000 Advanced Operation and Maintenance

  Course Description: Intended for DACS III-2000 technical support people, this five-day course provides in-depth knowledge of DACS III-2000 functions, capabilities, and features.

  Prerequisites: Background in the operation and maintenance of digital transmission equipment and an understanding of digital transmission theory and schematic drawings.

To obtain more information or to register for these courses, call:

1 800 TRAINER (select option 2)

In Canada call:
1 800 221-1647

Or write to:

AT&T National Product Training Center
Transmission Marketing Department
5151 Blazer Memorial Parkway
Dublin, Ohio 43017

Scheduling and reservation information is also available through the on-line training COMputerized CATalog System, known as COMCATS. To access COMCATS, connect your modem and answer the prompts as follows:

dial:	1 800 662-0662
login:	comcats
password:	at&tcat

An easy-to-follow menu system allows you to locate specific course descriptions, tuition and scheduling information, and provides the how, where, and when-to-register information you need. (COMCATS uses AT&T's *UNIX®* system. Communications are supported with full duplex, 300/1200/2400 baud, space parity, 7 data bits, and 1 stop bit.)

Technical Support

AT&T technical support for the DACS III-2000 product begins at the user level with the COACH system, which provides users with timely information on new features, problems, solutions, and circuit pack compatibility. If you encounter problems you cannot resolve, contact your system administrator or the next level of technical support.

How to Order Documents

To obtain additional copies of this document or a copy of the related documentation (except for the *Software Release Description*), send or call in an order by using the document title and ordering number and by following the instructions presented in Table 1.

Table 1. Ordering Documentation

Customer	To Order by Mail	To Order by Telephone (Monday through Friday)
Commercial Customers* or AT&T Entities	AT&T Customer Information Center Attention: Order Entry Center 2855 N. Franklin Road P.O. Box 19901 Indianapolis, IN 46219	Within USA: **1 800 432-6600** *7:30 a.m. to 6:30 p.m. EST* From Canada: **1 800 255-1242** Worldwide: Phone: **1 317 352-8557** FAX: **1 317 352-8484**
RBOC/BOC	Process through your Company Documentation Coordinator	

* For commercial customers, a check, money order, purchase order number, or charge card number is required with all orders. Make checks payable to AT&T.

† AT&T entities should use Form IND 1-80.80 FA, available through the Customer Information Center.

After placing a one-time order, you can request a standing order for any document revisions *of that software release.*

How to Comment on This Document

A comment form is located after the title and legal pages in the front of this document. If you have comments, please do the following:

1. Fill out the form (name, company, address, and telephone number are optional).
2. Remove the form from the binder.
3. Fold it in half so that the postage-paid return address can be seen by the postal service (tape the ends together at the bottom).
4. Drop it in any U.S. Postal Service mailbox.

We want to hear from you. Your feedback helps us better meet your information needs.

If the comment form is missing, send comments on this document to:

AT&T Bell Laboratories
DACS III-2000 Development Department
Customer Documentation Coordinator
Room 2G-513A
101 Crawfords Corner Road
P.O. Box 3030
Holmdel, NJ 07733-3030

New Features

1

Contents

Benefits 1-1

Features 1-1

- EDSX for STS-1 Signals 1-2
- Improved Alarm Reporting and Clearing 1-4
- **DACSmate** and DACSlink Connection 1-4
- Increased User ID (UID) Length 1-5
- Increased Alternate Map Capability 1-5

ISO-9001 1-5

New Features

1

This chapter outlines the new benefits and features of Release 4.0 of DACS III-2000.

For descriptions of the features introduced in prior releases, see "Features and Benefits from Prior Releases" in Appendix B of the *DACS III-2000, Release 4.0, Applications, Planning, and Ordering* document (AT&T 365-331-200).

Benefits

DACS III-2000 Release 4.0 provides these benefits:

- ability to cross-connect STS-1 signals
- a standard EC-1 (STS-1e) interface that provides connectivity to other network elements that support the EC-1 standard, including AT&T FT-2000, DDM-2000, and DACS IV-2000
- local and remote dial-in access for diagnostics and repair by AT&T personnel using AT&T **DACSmate**™ and AT&T DACSlink

Features

Release 4.0 provides these features:

- SONET Electronic Digital Signal Cross-connect (EDSX) for STS-1 signals
- improved alarm reporting and clearing
- **DACSmate** and DACSlink connection
- increased user ID (UID) length
- increased alternate map capability

EDSX for STS-1 Signals

With Release 4.0, a DACS III-2000 input/output bay can interface up to either 240 DS3 signals or 240 STS-1 signals, using standard power units.

Equipment and Provisioning

An I/O bay can be equipped and provisioned for either all DS3 signals or all STS-1 signals. Once a bay is provisioned, the DACS III-2000 system software accepts only the type of circuit pack for which the bay is provisioned. The STS-1 input and output modules use the same shelf, controller, and power as the DS3 input and output modules, but replace the four DS3-specific circuit packs with STS-1 circuit packs, as shown in Table 1-1.

Table 1-1. STS-1 Circuit Packs

This STS-1 Circuit Pack...	Replaces this DS3 Circuit Pack...
STS1IN INTFC (ARW11)	DS3IN INTFC (ARW1B)
STS1OUT INTFC (ARW12)	DS3OUT INTFC (ARW2B)
STS1IN PROTN INTFC (ARW16)	DS3IN PROTN INTFC (ARW6)
STS1 PROTN SW (ARW13)	DS3 PROTN SW (ARW3)

As with DS3 cross-connections, each STS-1 input module must be paired with an STS-1 output module in an input/output bay. Because each input/output bay can be provisioned for a signal type independently of how the other input/output bays are provisioned, the same DACS III-2000 system can be used to cross-connect both types of signals.That is, one or more input/output bays in one DACS III-2000 system can cross-connect DS3 signals while one or more separate input/output bays in that same system can cross-connect STS-1 signals.The DACS III-2000 system does *not* mix or multiplex signal types.

Any combination of DS3 bays and STS-1 bays are allowed, up to the maximum number of bays supported by a system. A 1024-size system supports up to four bays, and a 2048-size system supports up to eight bays.

A DS3 bay can be converted to an STS-1 bay in the field without affecting service on other bays, and vice versa. Service on the bay to be converted must first be removed.

A new STS-1 or DS3 input/output bay can be ordered equipped with electromagnetic interference (EMI) shields, but EMI shields cannot be retrofitted on an in-service system.

If you choose to use the optional dual power feature on a DACS III-2000 EDSX system, each input/output bay powered by dual power units can handle up to 208 STS-1 signals, because of the extra power requirements of the STS-1 circuit-packs. DS3 input/output bays on such a system still can handle up to 240 DS3 signals.

Equipment Maintenance Capabilities

Equipment maintenance capabilities already provided for DS3 circuit packs are also provided for STS-1 circuit packs. These capabilities include:

- fault isolation
- protection switching
- diagnostics (including LED tests, relay audit, test cable, and frame audits)

EC-1 Facility Electrical Characteristics, Signal Maintenance, and Port Parameter Provisioning

The new STS-1 interface circuit packs interface eight unidirectional EC-1 signals in separate input and output packs.

The STS-1 input circuit pack monitors bipolar violations and corrects them on the outgoing signal. The STS-1 output interface circuit pack has a set of line buildout (LBO) jumpers for the group of eight ports. The STS-1 output interface pack generates a bipolar signal without illegal bipolar violations, in conformance with the ANSI standard pulse template.

The EC-1 interface detects Loss-of-Signal and inserts STS-1 Line Alarm Indication Signal downstream. Both Loss-of-Signal and bipolar violations generate alarms. The EC-1 interface also generates STS-1 IDLE on all unconnected ports.

Ports on STS-1 interface circuit packs can be provisioned with the same parameters as the DS3 packs, including input status, output mode, and bipolar violation threshold.

STS-1 Connectivity

STS-1 signals can be cross-connected in the same ways as DS3 signals. Likewise, the same test access connections provided for DS3 signals are also provided for STS-1 signals. STS-1 cross-connect commands cannot be included in alternate maps.

STS-1 Section Performance Monitoring

STS-1 section performance monitoring is provided. This feature is similar to the DS3 line performance monitoring feature, and has the same parameters, storage, thresholds, and reports.

Alarms

The STS-1 circuit packs provide facility alarms for Loss-of-Signal and for exceeding the bipolar violation threshold, with programmable alarm delay and alarm clear delay. Loss-of-Signal and bipolar violation threshold alarms can be individually provisioned per port as major, minor, no alarm, or no report.

Message Sets and TABS/TBOS

Both Message Set 1 and Message Set 2 support EDSX. Likewise, the telemetry asynchronous block serial and telemetry byte-oriented serial (TABS/TBOS) feature for alarms, surveillance, and control supports the STS-1 interface circuit packs.

Improved Alarm Reporting and Clearing

Improved alarm reporting and clearing provides no delay on reporting equipment alarms, an individual alarm clear message for each alarm, and enables you to provision the alarm clear delay time.

In addition, a new command (RTRV-ALM-ALL) has been added for retrieving all active alarms.

DACSmate and DACSlink Connection

DACSmate is a **UNIX**® system 386 PC-based software tool that provides local and remote dial-in access for AT&T diagnostics and repair of a DACS III-2000 system. **DACSmate** is a support tool designed to provide increased visibility into a system's internal operations. The tool can be connected to a DACS III-2000 system, or used remotely with a DACSlink connection.

DACSlink is a bridge connection between the internal DACS III-2000 LAN and your X.25 dial-in network operating up to 56 Kb/second. A LAN cable assembly is required.

DACSmate is used by AT&T technical experts for quicker analysis and repair of any software or database problems.

Increased User ID (UID) Length

The user ID (UID) can now be as long as 10 characters.

Increased Alternate Map Capability

The DACS III-2000 system can now store up to 1,000 alternate maps that average 50 cross-connect commands each. If each map has fewer commands, the system can store more maps, to an absolute maximum of 2,000 maps.

ISO-9001

DACS III-2000 is developed and manufactured at ISO-9001 certified facilities in conformance with the strictest quality standards.

Frame Communications

2

Contents

Link Administration 2-1

- User ID Creation and Deletion 2-2
- Changes to User IDs, Passwords, and Other Parameters 2-3
- Link, Terminal, and Printer Settings 2-6
- Preventing CILINK-4 Communication Problems 2-10

Logging on and Logging off the System 2-11

- Logging on to the System 2-11
- Logging off the System 2-13

Commands and Messages 2-14

- Commands 2-14
- Command Acknowledgments 2-17
- Messages 2-18

Menu/Prompt Mode 2-19

Security Audit Feature 2-22

Frame Communications

2

This chapter provides information needed to communicate with the frame:

- link administration
- logon and logoff procedures
- commands and messages
- menu/prompt mode
- security audit feature

Link Administration

The tasks for link administration include:

- creating and deleting user IDs
- changing user passwords, user IDs, privilege, user-type and message set
- changing link, terminal, and printer configurations
- preventing CILINK-4 problems

Procedures for each task follow.

User ID Creation and Deletion

Users with a user community functional category (UCFC) of security management and network administration (S) and a user community authorization level (UCAL) of 5 are allowed to create and delete user identifications. Anyone who is going to access the system from a craft interface terminal needs a user ID.

Procedure 2-1.Creating User IDs

Enter the following command to add a new user ID to the system:

— For *Message Set 1*

```
CRTE-LGN:[TID]::[CTAG]:PWD,UID:UPC:[UTYPE]:[MSET];
```

— For *Message Set 2*

```
ENT-SECU-USER:[TID]:UID:[CTAG]::PWD,,UPC:
[UTYPE],[MSET];
```

where

`TID` = the target identification; the default is null (optional)

`CTAG` = the correlation tag (optional)

`PWD` = the password associated with the UID you are creating; must be 6 to 8 characters with the first character being a letter

`UID` = the user identification code you are creating; must be 1 to 6 characters with the first character being a letter

`UPC` = the user privilege code that specifies the UCFC and UCAL

`UTYPE` = the user type; either `HUMAN` or `MACHINE`; the default is `MACHINE`; specified in *Message Set 2* as `UTYPE={HUMAN,MACHINE}` (optional)

`MSET` = the message set to be used by the user—either 1 or 2; the default is the system administrator's (or the next level of technical support's) message set; specified in *Message Set 2* as `MSGSET=`{1,2} (optional)

- If the command is successful, the system responds with the `COMPLD` message; the password is not displayed in the message.
- If the command is unsuccessful, the system responds with the `DENY` message.

Procedure 2-2. Deleting User IDs

Delete a user's ID by entering:

— For *Message Set 1*

```
DLT-LGN:[TID]::[CTAG]:UID;
```

— For *Message Set 2*

```
DLT-SECU-USER:[TID]:UID:[CTAG];
```

where

TID = the target identification (optional)

CTAG = the correlation tag (optional)

UID = the user ID to be deleted

The user ID must be logged off, otherwise the command is denied with a "data not valid" (IDNV) error code.

- If the command is successful, the system responds with the COMPLD message.
- If the command is unsuccessful, the system responds with the DENY message.

Changes to User IDs, Passwords, and Other Parameters

A DACS III-2000 system administrator or the next level of technical support can use the CHG-LGN (*Message Set 1*) or ED-SECU-USER (*Message Set 2*) command to change the following for a system administrator, the next level of technical support, or for another user:

- user identification code (UID)
- user community functional category and authorization level (UCFC and UCAL)
- password (PID)
- user type (UTYPE)
- message set (MSET)

Users who are not system administrators or the next level of technical support can use the CHG-LGN (*Message Set 1*) or ED-SECU-PID (*Message Set 2*) command to change only their own passwords.

The procedure for changing user IDs, passwords, and other parameters follows.

Procedure 2-3. Changing User IDs, Passwords, and Other Parameters

If you are a system administrator or the next level of technical support (S5), enter the following command to change a user ID, password, and other parameters:

— For *Message Set 1*

```
CHG-LGN:[TID]::[CTAG]:OPWD,OID:[NPWD],[NID]:[UPC]:
[UTYPE]:[MSET];
```

— For *Message Set 2*

```
ED-SECU-USER:[TID]:OID:[CTAG]::[NID],[NPWD],,
[UPC]:[UTYPE],[MSET];
```

where

`TID` = the target identification (optional)

`CTAG` = the correlation tag (optional)

`OPWD` = the old password (optional)

`OID` = the old user id

`NPWD` = the new password; composed of 6 to 8 legal characters (optional)

`NID` = the new user ID; composed of 6 to 8 legal characters (optional)

`UPC` = the user privilege code that specifies the UCFC and UCAL (optional)

`UTYPE` = the user type; either `HUMAN` or `MACHINE`; the default is `MACHINE`; specified in *Message Set 2* as `UTYPE={HUMAN,MACHINE}` (optional)

`MSET` = the message set to be used by the user—either 1 or 2; the default is the system administrator's (or the next level of technical support's) message set specified in *Message Set 2* as `MSGSET=`{1,2} (optional)

- If the command is successful, the system responds with the `COMPLD` message.
- If the command is unsuccessful, the system responds with the `DENY` message.

If you are *not* a system administrator or the next level of technical support, enter the following command to change your password:

— For *Message Set 1*

```
CHG-LGN:[TID]::[CTAG]:OPWD,OID:NPWD;
```

— For *Message Set 2*

```
ED-SECU-PID:[TID]:OID:[CTAG]::OPWD,NPWD;
```

where

`TID` = the target identification (optional)

`CTAG` = the correlation tag (optional)

`OPWD` = the old password

`OID` = the user identification

`NPWD` = the new password; composed of 6 to 8 legal characters with the first character being a letter

- If the command is successful, the system responds with the `COMPLD` message.
- If the command is unsuccessful, the system responds with the `DENY` message.

Link, Terminal, and Printer Settings

Link, terminal, and printer settings must be accurate in order for the different pieces of equipment to interact correctly. The baud rate is important because it establishes the speed at which information is transferred. Some variations may occur depending on the type of equipment being used, but, in general, the terminal settings should be as follows:

baud rate	must be the same as the link
duplex	set to FULL
parity	set to EVEN
mode	set to DC1/DC3
answerback	set to ^f (Control-f) character
databits	7 databits, 1 stop bit

It is strongly recommended that the printer be attached to the terminal, *not* directly to the frame, and that all printer options match the terminal's settings. For those users who have a 700 series terminal, there is an additional set of printer options that must be set as indicated:

databits	set to 7 databits, 1 stop bit
receive flow	set to XON/XOFF
generate flow	set to NONE

When considering changes to link baud rates, remember that CILINK-4 only operates at a baud rate of 2400.

Use Procedure 2-4 for changing link and terminal baud rates when only one Snider link is connected. Use Procedure 2-5 when two or more Snider links are connected.

CAUTION:
Inability to communicate with the frame.
Putting all Snider links into the out-of-service state, may make the frame inaccessible if X.25 links are unresponsive.
Keep at least one Snider link in-service at all times. If the in-service Snider link will not always have a terminal connected to it, set the message screening mode to INPUT using the ED-PRMTR-LINK command.

Procedure 2-4. Changing Administrative Links when Only One Snider Link is Connected

1. Check the states of the other Snider links by entering:

   RTRV-PRMTR-LINK;

2. Select a Snider link that is currently out-of-service (OOS).

3. Restore the selected link by entering:

   RST-LINK::CLNK;

   where

   CLNK = the link ID chosen in Step 1; specified as CILINK-{1through 6}

4. Determine the baud rate for your link, using the RTRV-PRMTR-LINK command, and for your terminal, by reviewing the set-up screen.

5. Log off the current link by entering:

   LGT-USER; or **CANC-USER;**

6. Move the connector jack for your terminal to the jack of the link restored in Step 2. Figure 2-1 shows the location of the jacks associated with each link.

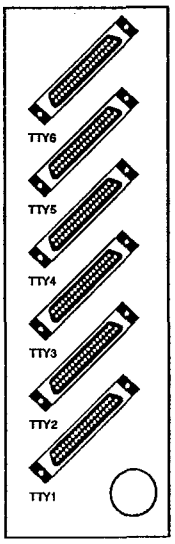

Figure 2-1. Interface Connector Panel

7. Enter the user identification (UID) and password at the terminal now connected to the new link.

8. Change the baud rate of the original link by entering each of the following *three* commands:

   a. enter **RMV-LINK::CLNK;**

      where

      CLNK = the number of the CI link to be removed, identified as CILINK-{1 through 6}

   b. enter **ED-PRMTR-LINK::CLINK::,BR;**

      where

      CLINK = the number of the CI link to be changed, identified as CILINK-{1 through 6}

      BR = the link's baud rate; allowable baud rates are 300, 1200, 2400, 4800, and 9600

   c. enter **RST-LINK::CLNK;**

      where

      CLNK = the number of the CI link that was changed, identified as CILINK-{1 through 6}

9. Log off the link by entering:

   LGT-USER; or CANC-USER;

10. Move the connector jack back to the original link, at the back of the frame.

11. Change the physical baud rate of your terminal to match the baud rate of the link according to the owner's manual provided with your terminal.

12. Enter the user identification at the `login:` prompt.

13. Enter the password at the `password:` prompt.

14. Remove the link used to change baud rate from service by entering:

    RMV-LINK::CLNK;

    where

    CLNK = the number of the CI link used to change baud rate, identified as CILINK-{1 through 6}

Procedure 2-5. Changing Administrative Links When Two or More Snider Links are Connected

1. Check the states of the other Snider links by entering:

   RTRV-PRMTR-LINK;

2. Determine the baud rate for your link and terminal.

3. Log off your link by entering

   LGT-USER; or **CANC-USER;**

4. Log on to the system using the other terminal.

   If you do not have access to another terminal, contact one of the remote locations connected to the frame and request that personnel there perform the next step.

5. Change the baud rate of the original link by entering each of the following *three* commands:

   a. enter **RMV-LINK::CLNK;**

      where

      CLNK = the number of the CI link to be changed, identified as CILINK-{1 through 6}

   b. enter **ED-PRMTR-LINK::CLINK::,BR;**

      where

      CLINK = the number of the CI link to be changed, identified as CILINK-{1 through 6}

      BR = the link's baud rate; allowable baud rates are 300, 1200, 2400, 4800, and 9600

   c. enter **RST-LINK::CLNK;**

      where

      CLNK = the number of the CI link to be changed, identified as CILINK-{1 through 6}

6. Return to the terminal connected to the original link and change the physical baud rate of your terminal according to the owner's manual provided with the terminal.

7. Enter the user identification at the `login:` prompt.

8. Enter the password at the `password:` prompt.

Preventing CILINK-4 Communication Problems

When the administrative link, CILINK-4, is provisioned to the telemetry byte-oriented serial product (TBOS) protocol and is in service, problems may occur if the cable, connecting it to the main controller, is removed. The response to a request for information on certain display points comes back, but the information is not lined up in the same sequence as the request.

To clear the problem, the link has to be removed and then restored to service. To prevent the problem from occurring, you must remove the link from service before you remove and replace the cable. Be sure the baud rate matches the baud rate of the general telemetry processor (GTP) or other telemetry equipment attached to the link.

Logging on and Logging off the System

Access to a DACS III-2000 frame is controlled by a system administrator, or the next level of technical support, who assigns each authorized user a login name. In commands, the login name is referred to as the user identification (UID).

You cannot log on or log off while the main controller (MC) module is being restored. If you receive the "restore MC in progress" (SRMI) error code, wait until the main controller module is restored before trying again to log on or log off.

Logging on to the System

The process for logging on to the system varies depending on whether you are using a Snider link or an X.25 link. Procedures for both links follow.

Procedure 2-6. Logging on over a Snider Link

1. Get the assigned user identification (UID) and password from your system administrator or the next level of technical support.
2. Check the messages on your terminal screen.
   - If you see garbled messages, change the baud rate of your terminal, according to the owner's manual provided with the terminal, until a nongarbled `login:` prompt appears.

     The DACS III-2000 system is capable of operating at the following baud rates: 300, 1200, 2400, 4800, 9600. The default is 1200 bps.
   - If the `login:` prompt does not appear, press the return key until it appears.
   - If the messages on your terminal screen are okay, continue this procedure at Step 3.
3. At the `login:` prompt, enter the UID and press the return key.
4. At the `password:` prompt, enter the system password and press the return key. The password is *not* echoed on the screen.
5. If you are successful in logging on, the system provides the system prompt (<).

Procedure 2-7. Logging on over an X.25 Link

Enter either of the following commands at the system prompt:

LGN-USER::UID::PWD;

or

ACT-USER::UID:::PWD;

where

UID = the assigned user identification

PWD = the password associated with the user identification

- If the system prompt does not appear, press the return key until it appears.
- If the login command is successful, the system responds with the following message:

```
 <TID #n YY-MM-DD HH:MM:SS>
M LGN USER::<UID:CTAG>: COMPLD
/* WARNING */
/* THE DACS III-2000 SYSTEM IS RESTRICTED TO AUTHORIZED USERS      */
/* FOR LEGITIMATE BUSINESS PURPOSES AND IS SUBJECT TO AUDIT.       */
/* UNAUTHORIZED ACCESS, USE, OR MODIFICATION OF THE DACS III-2000  */
/* SYSTEM IS A CRIMINAL VIOLATION OF FEDERAL AND STATE LAWS.       */
;
```

- If the login command is unsuccessful, the system responds with the DENY message.

Logging off the System

The procedure for logging off the system is the same for both Snider links and X.25 links.

Procedure 2-8. Logging off the System

- If you want to log yourself off the system, enter either of the following commands at the system prompt:

  `LGT-USER;`

  or

  `CANC-USER;`

- If you are a system administrator, or the next level of technical support, and you want to log off another user, enter the following command:

  `CANC-USER::UID;`

  or

  `LGT-USER::UID;`

  where

  `UID` = the user ID to be logged off

Commands and Messages

The DACS III-2000 system accepts commands from a user through a data link connected to one of the five administrative ports; messages are provided to users through the same links.

Commands direct the system to perform its functions, such as:

- make cross-connections
- provide test access
- provide system reports

Messages are the system's means for providing you with:

- requested reports
- status of input command completion; successful or unsuccessful
- type of error that has occurred

Messages occur under two circumstances: as a result of user input and autonomously, alerting you to trouble conditions.

A brief overview of the commands and messages is provided in this section.

Commands

Commands have a format that consists of three parts:

verb	tells the system what you want it to do Examples of verbs are LGN (login); CONN (connect), and RTRV (retrieve).
modifier(s)	tell the system where the verb action is to take place For example, DISC-TACC-T3 informs the system that you want to disconnect a DS3 test access connection. In this example TACC-T3 is a two-part modifier.
parameters	provide specific information about the entity that is receiving the action of the command For example, DISC-TACC-T3::4-2-1; tells the system to disconnect the test access connection on unit 4, slot 2, port 1.

Parameters are usually separated by a colon unless they are closely related in which case they are separated by a comma. A semicolon always ends the command and tells the system to execute the command.

Table 2-1 and Table 2-2 provide lists of the appropriate entity identifiers used in commands for each of the DACS III-2000 system sizes.

Table 2-1. Entity Identifiers for the 1024-size System

Entity	Identifier Used in Command
Main controller module	MC
Central processing unit	CPU
Unit (bay)	UNIT-{1 through 4}
Unit controller	UC-{1 through 4}-{IN,OUT}
Unit interface	UI
Maintenance circuit pack	MTC
Memory expansion	MX
Secondary storage controller	SSC
PRIMARY	{DISKA, DISKB}
Secondary memory	SEC
Enhanced communications interface	ECI
Main controller (MC) module power	PWRB, PWRC, PWRD
Switch power	PWRA-SW-{1 through 3}
Input or Output power	PWRA-{1 through 4}-{IN,OUT}-{1 through 3}
DS3 switch module	DS3SW-{1,2}-{1 through 16}
Communication interface link	CILINK-{1 through 6}
DS3 interface, input side	DS3IN-{1 through 4}-{1 through 30,P1,P2}
DS3 interface, output side	DS3OUT-{1 through 4}-{1 through 30,P1,P2}
DS3 interface protection switch	DS3PROTN-{1 through 4}-{IN,OUT}-{1,2}
STS-1 interface, input side	STS1IN-{1 through 4}-{1 through 30,P1,P2}
STS-1 interface, output side	STS1OUT-{1 through 4}-{1 through 30,P1,P2}
STS-1 interface protection switch	STS1PROTN-{1 through 4}-{IN,OUT}-{1,2}
Switch communications interface	SCI
Alternate map command numbers	{1 through 960}

Table 2-2. Entity Identifiers for the 2048-size System

Entity	Identifier Use in Command
Main controller	MC
Central processing unit	CPU
Unit (bay)	UNIT-{1 through 8}
Unit controller	UC-{1 through 8}-{IN,OUT}
Unit interface	UI
Maintenance circuit pack	MTC
Memory expansion	MX
Secondary storage controller	SSC
PRIMARY	{DISKA, DISKB}
Secondary memory	SEC
Enhanced communication interface	ECI
Main controller power	PWRB, PWRC, PWRD
Switch power	PWRA-SW-{1,2}-{1 through 4}
Input or Output power	PWRA-{1 through 8}-{IN,OUT}-{1 through 4}
DS3 switch	DS3SW-{1 through 4}-{1 through 16}
Communication interface link	CILINK-{1 through 6}
DS3 interface, input side	DS3IN-{1 through 8}-{1 through 30,P1,P2}
DS3 interface, output side	DS3OUT-{1 through 8}-{1 through 30,P1,P2}
DS3 interface protection switch	DS3PROTN-{1 through 8}-{IN,OUT}-{1,2}
STS-1 interface, input side	STS1IN-{1 through 8}-{1 through 30,P1,P2}
STS-1 interface, output side	STS1OUT-{1 through 8}-{1 through 30,P1,P2}
STS-1 interface protection switch	STS1PROTN-{1 through 8}-{IN,OUT}-{1,2}
Switch communications interface	SCI-{1,2}
Fan	FAN-{1,2}
Alternate map command numbers	{1 through 1920}

Command Acknowledgments

When the DACS III-2000 system receives a command, it replies with a two-character acknowledgment. The acknowledgments are shown in Table 2-3.

Table 2-3. Command Acknowledgments

Acknowledgment	Meaning
PF	Printout Follows—the usual response indicating a normal or error message is coming
RL	Retry Later—the system cannot execute the command; wait, then enter the command again
NG	No Good—command cannot be executed due to conflict with current state of the frame
NA	Not Available—abnormal conditions exist and control of processing has been lost, making correct acknowledgment impossible
?V	Command code error—the format of the input command contains errors (*Message Set 1*, only)
?D	Parameter block error—there is an error in one of the parameters (*Message Set 1*, only)
?E	Inconsistency in command—the format is correct, but there is a problem in the command that could not be identified as either ?V or ?D (*Message Set 1*, only)
?P	Parity error—occurred in the input (*Message Set 1*, only)
?T	Timeout—the system aborted the command when no further input was received within the allotted time
?X	Command aborted—response to a user's request to abort a command
IISP	Input, Invalid Syntax or Punctuation (*Message Set 2*, only)

Messages

Messages contain a minimum of two lines known as the header line and the primary line. Additional information, when it appears, is given in secondary lines.

An example of the header and primary lines in a normal two-line message follows:

```
   FNJ123456#1 91-06-29 11:20:32
M  DLT CONF T3::2-3-4,1-2-3:::: COMPLD
;
```

In the previous example, FNJ123456 is the target identification of the frame, 1 is the link identification, 91-06-29 is the date, 11:20:32 is the time, M is the priority action code, DLT CONF T3 is the input command, 2-3-4 and 1-2-3 identify the ports, and COMPLD signifies that the command completed successfully.

The priority action codes and their meanings are presented in Table 2-4.

Table 2-4. Message Priority Action Codes

Code	Meaning
*C	Critical alarm
**	Immediate action, major alarm
*	Action, minor alarm
A	Other autonomously generated action message
M	Result of manually input command

If the frame cannot perform the requested action, the header and primary lines are the same except COMPLD is replaced by DENY. A secondary line contains a four-character error code which indicates the reason for the command denial. The error codes are listed in Appendix C. An example of an error message follows:

```
   CAMEO1#1 91-08-06 1:03:25
M  RMV LINK::CILINK-3: DENY
   SAOS
;
```

In this example, SAOS is the error code that means already-out-of-service.

The system also supports the PRTL message, which means the command partially completed, for features such as multiple port broadcast (conference).

Menu/Prompt Mode

The DACS III-2000 system provides two different methods, or modes, for entering commands: command mode and menu/prompt mode.

Command mode	is used most often by experienced users who are familiar with the command format and punctuation. If a mistake is made while entering a command, the system does not prompt you for the correct information.
Menu/prompt mode	is for less experienced users. When a question mark (?) is entered at the command prompt (<), the system prompts you through menu choices until the exact command is located and desired parameters selected. This mode is described in the next section.

The menu/prompt mode provides two tiers of menu structure: activity and command. The activity tier includes six main categories of tasks, two of which are broken down into subcategories:

- provisioning
- test access
- system maintenance
  - — diagnostics and alarms
  - — protection switching
- administration
  - — login
  - — installation
  - — miscellaneous
- performance monitoring
- alternate maps

The activity menu from the Menu/Prompt Mode follows:

```
ACTIVITY MENU
/*
Select from
 1. PROVISIONING - CROSS-CONNECTS - DS3
 2. PROVISIONING - CROSS-CONNECTS - STS-1
 3. TEST ACCESS
 4. SYSTEM MAINTENANCE - DIAGNOSTICS AND ALARMS
 5. SYSTEM MAINTENANCE - PROTECTION SWITCHING
 6. ADMINISTRATION - LOGIN
 7. ADMINISTRATION - EQUIPMENT INSTALLATION
 8. ADMINISTRATION - SYSTEM INSTALLATION
 9. ADMINISTRATION - MISCELLANEOUS
10. PERFORMANCE MONITORING
11. ALTERNATE MAPS
12. EXIT TO COMMAND PROMPT (<)

*/
ACTIVITY =
```

To enter the menu/prompt mode, enter a question mark (?) at the command (<) prompt. Once you are at the activity menu, enter the number corresponding to the activity you want.

For example, to see the provisioning menu, you would enter 1 at the activity menu prompt. The system responds with a second menu, the action menu, from which to select a command.

A sample of a provisioning action menu from the Menu/Prompt Mode follows:

```
/*
Select from
1.  CONN-DSX-T3 X-connect 2-way DS3 channels
2.  CONN-DSX1-T3 X-connect 1-way DS3 channels
3.  CONN-ROLL-T3 Rollover 1-way DS3 channels
                        .
                        .
                        .
15. ABT-CMD Abort RTRV command currently executing
16. EXIT Exit to command prompt (<)
*/

ACTION =
```

When you have selected a particular command by typing the number next to the equal sign (=), the system prompts you for each parameter of that particular command. If you make a typing mistake and the system does not recognize the entry, it issues an error message and reprompts you for the parameter. Throughout the use of the menu/prompt mode, you have the option of asking for more information about an error message or a particular prompt by entering a question mark (?).

When you have responded to all the command prompts, the system displays the command and its parameters along with the selections you made. This display allows you to verify that everything has been entered correctly and to decide whether to execute or not or to modify the command.

A sample of an assembled command and the execution prompt in the Menu/Prompt Mode follows:

```
/*
Review of Parameter Responses ...
COMMAND = CONN-DSX-T3
TARGET ID =
(FROM) DS3 PORT = 3-17-8
(TO) DS3 PORT = 4-11-3
CORRELATION TAG =
RED LINED FACILITY = NO
(FROM) OUTPUT MODE = NORM - normal (cross-connected data)
(CURRENTTO) OUTPUT MODE = NORM - normal (cross-connected data)
*/
EXECUTE COMMAND? (YES/NO/MODIFY) =
```

Security Audit Feature

The security audit feature, restricted to personnel who have a user privilege code of S5, provides the capability of storing and retrieving up to a maximum of 100 security-related events that occur in the DACS III-2000 system.

The procedure for managing the security audit information follows.

Procedure 2-9. Managing Security Audit Information

1. Retrieve security audit events by entering:

   RTRV-SECU-AUD::::DATE:TIME;

   where

   DATE = the date from which security records are to be retrieved; the default is null. Expressed as YYMMDD where YY is the last two digits of the year {00 through 99}, MM is the month {01 through 12}, and DD is the day of the month {01 through 31}.

   TIME = the time from which security records are to be retrieved; the default is null. Expressed as HHMMSS where HH is the hour {00 through 23}, MM is the minutes {00 through 59}, and SS is the seconds {00 through 59}.

   If the default value of date is used and you try to enter a specific time value, the command is denied.

   - If no security records exist for the requested time period, the system responds with the following message:

     ```
       <TID #n YY-MM-DD HH:MM:SS>
     M  RTRV SECU AUD:::<CTAG:DATE:TIME> COMPLD
     ;
     ```

   - If security records exist for the requested time period, the system responds with the COMPLD message and provides a list of the security messages:

     ```
       #1 91-10-20 10:20:21
     M  RTRV SECU AUD::::91-10-18:13:55:31 COMPLD:
       /* STATUS,DATE,TIME,LINKID,UID,COMMAND */
       "COMPLD,91-10-18,14:10:02,CILINK-3,cjb,CHG-LGN"
       "COMPLD,91-10-18,14:20:04,CILINK-2,rmb,ED-SECU-LINK"
     ;
     ```

- If an error occurs in the command, the system responds with the following error message:

```
   <TID #n YY-MM-DD HH:MM:SS>
M   RTRV SECU AUD:::<CTAG:DATE:TIME> DENY
   <ERCD>
    /* <explanatory text> */
;
```

2. Once the records have been retrieved, you can delete all security records by entering:

   DLT-SECU-AUD;

   The output response displays deleted security events.

Safety Precautions and Circuit Pack Handling

3

Contents

Equipment Precautions 3-2

- Electrostatic Discharge 3-2
- Circuit Pack Handling 3-2

Circuit Pack Installation and Removal 3-4

- Input, Output, DS3SW CTR, PRI3 and SEC3 Circuit Packs 3-4
- DS3SWL CTR Circuit Pack for 2048-Size Systems 3-9
- Main Controller (MC) Module Circuit Packs 3-16

Line Buildout Settings 3-18

Disk Drives, Optical Drives and Optical Cartridges 3-22

- Disk Drive and Optical Drive Handling 3-22
- Optical Cartridge Handling 3-22
- Optical Cartridge Description 3-23
- Optical Cartridge Insertion and Removal 3-27
- Spare PRI3 and SEC3 Circuit Pack Verification 3-33

Circuit Pack Returns 3-45

Safety Precautions and Circuit Pack Handling

3

This chapter presents safety precautions and circuit pack handling instructions. The topics covered include:

- equipment precautions
- circuit pack insertion and removal for
  - — input, output, DS3SW CTR, PRI3, and SEC3 circuit packs
  - — DS3SWL CTR circuit packs for 2048-size systems
  - — main controller (MC) module circuit packs
- setting line buildout
- disk drives, optical drives, and optical cartridges
  - — disk drive and optical drive handling
  - — optical cartridge handling
  - — optical cartridge insertion and removal
  - — spare PRI3 and SEC3 circuit pack verification
- circuit pack returns

Equipment Precautions

This section presents two areas of concern that can impact a DACS III-2000 system and its components:

- electrostatic discharge
- circuit pack handling

Electrostatic Discharge

Electrostatic discharge (ESD) is the sudden release of the charge associated with static electricity. Static charge is generated whenever two materials come into contact with each other and then are separated.

The DACS III-2000 system contains integrated circuits and other electronic equipment that are sensitive to static electrical charges. All products that can be damaged by ESD are shipped in special packaging and must be handled carefully upon their removal.

Identifying damage due to ESD can be difficult because in many cases physical damage cannot be seen. A circuit pack or static-sensitive device that has been exposed to an electrostatic discharge may function normally, but it also may have a reduced life expectancy or it may function erratically.

Preventing ESD damage begins with the basic assumption that all electronic devices are sensitive to electrostatic discharge. Work areas must be kept clear of common plastics since they are a major source of static electricity. Creating a static-safe work area also includes taking the specific precaution of grounding yourself whenever you are handling circuit packs in and around the frame. Wearing an ESD wrist strap is an effective way to ground yourself.

Circuit Pack Handling

When handling circuit packs, keep in mind these precautions:

- Make sure that you are properly grounded before handling a circuit pack, optical drive or disk drive, reset switches, alarm cutoff button, or LED test button. Never hand a circuit pack to an ungrounded person.
- Keep circuit packs away from possible sources of static electricity, such as clothing and common plastics.
- Handle circuit packs only by the faceplate, latch, or by the top and bottom edges.
- Never touch the leads, connectors, or connector pins of a circuit pack.
- Never attach gummed labels or transparent tape to circuit packs.

- Use only approved cleaners for cleaning circuit pack gold fingers.
- Observe warning labels on bags and cartons.
- Remove *all* jewelry to avoid shock and damage both to yourself and to the equipment.

Circuit Pack Installation and Removal

This section contains installation and removal procedures for the following circuit packs:

- input, output, DS3SW CTR, PRI3, and SEC3 circuit packs
- DS3SWL CTR circuit packs for 2048-size systems
- main controller (MC) module circuit packs

Input, Output, DS3SW CTR, PRI3 and SEC3 Circuit Packs

The procedures for installing and removing input, output, DS3SW CTR, PRI3, and SEC3 circuit packs follow.

CAUTION:
Service interruption.
Removal of the PRI3 or SEC3 circuit packs may cause service interruption. Use this procedure for PRI3 or SEC3 circuit packs only if directed by one of the troubleclearing procedures in Chapter 10.

Procedure 3-1. Installing Circuit Packs

CAUTION:
Electrostatic discharge (ESD) damage.
ESD can cause damage to the components of a DACS III-2000 system. Wear an ESD wrist strap when working around the frame.

CAUTION:
Circuit pack damage.
Improper installation can cause damage. Read all the steps before proceeding.

1. Remove the plastic shipping protector from the contacts of the new circuit pack.
2. Open the latch to a 45° angle.

3. Position the circuit pack in the track provided in the circuit pack slot and, with your thumbs positioned one at the top and one at the bottom of the circuit pack, push the circuit pack into the slot using one continuous, even-pressured motion until the circuit pack goes no further; see Figure 3-1.

CAUTION:
Damage to the circuit pack.
Rocking the circuit pack up and down while pushing it into the frame may cause damage to the circuit pack.
If you are experiencing problems, remove the circuit pack, reposition it on the track, and try again to push it into the slot.

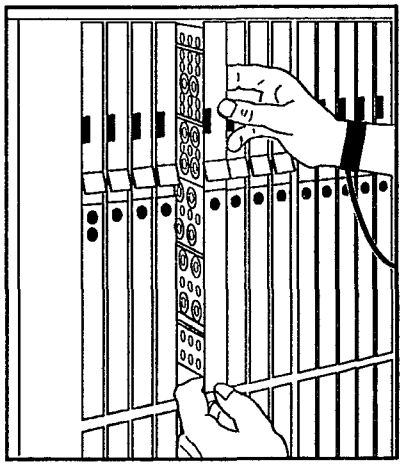

Figure 3-1. Installing Circuit Packs—Step 3

4. Raise the latch on the face of the circuit pack; see Figure 3-2. If the circuit pack resists entering the connector, remove the circuit pack, check for bent or broken pins, and, if none are found, try again to insert the circuit pack.

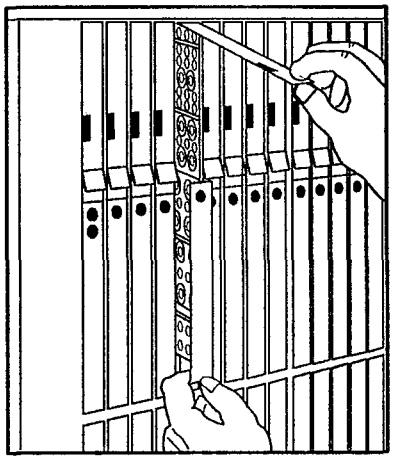

Figure 3-2. Installing Circuit Packs—Step 4

5. Push on the bottom part of the circuit pack until the latch engages the slot. Do not push on the extended latch; see Figure 3-3.

   For I/O bay circuit packs, a gentle side-to-side movement may eliminate any resistance the circuit pack encounters with the connector.

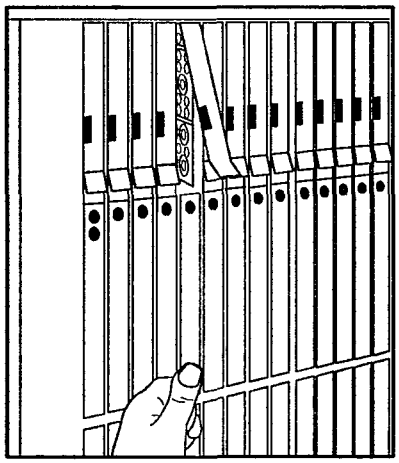

Figure 3-3. Installing Circuit Packs—Step 5

6. Close the latch by slowly pushing down. This seats the circuit pack; see Figure 3-4.

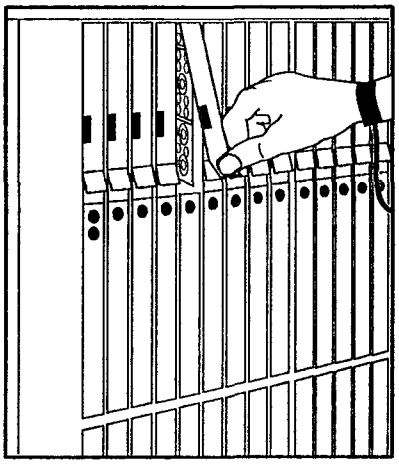

Figure 3-4. Installing Circuit Packs—Step 6

7. Make one final check that the circuit pack is securely seated by simultaneously pressing the upper and lower halves of the circuit pack; see Figure 3-5.

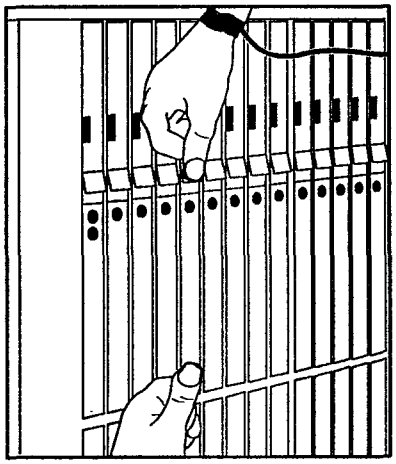

Figure 3-5. Installing Circuit Packs—Step 7

8. Make a backup of the database by entering the following command. If you need detailed information on this command, see Procedure 8-3, "Making Backups to Optical Cartridges."
   - If you do *not* have alternate maps, enter the command:

     CPY-MEM:::PRI,SEC,DBASE;

   - If you have alternate maps, enter the command:

     CPY-MEM:::PRI,SEC,BOTH;

     — If the system responds with the COMPLD message, the copy completed successfully.

     — If the system responds with the DENY message, check the error code in Appendix C for an explanation. Call your system administrator or the next level of technical support for assistance, if necessary.

Procedure 3-2. Removing Circuit Packs

CAUTION:
Service interruption.
Removal of the PRI3 or SEC3 circuit packs may cause service interruption. Use this procedure for PRI3 and SEC3 circuit packs only if directed by one of the trouble clearing procedures in Chapter 10, "Troubleclearing—Secondary Storage Subsystem."

CAUTION:
Electrostatic discharge (ESD) damage.
ESD can cause damage to the components of a DACS III-2000 system. Wear an ESD wrist strap when working around the frame.

1. Unseat the latch by slowly raising it from the circuit pack.
2. Grasp the circuit pack with one hand holding the latch up and the other hand at the bottom of the faceplate.
3. Pull out the circuit pack in one, continuous motion. Remember to avoid any rocking motion as this may cause damage.

DS3SWL CTR Circuit Pack for 2048-Size Systems

The DS3SWL CTR circuit pack is used in the switching module of a DACS III-2000 (2048). This circuit pack is longer than the other types and has two latches instead of one.

The procedure to install and remove the DS3SWL CTR circuit pack follows.

Procedure 3-3. Installing DS3SWL CTR Circuit Packs

CAUTION:
Electrostatic discharge (ESD) damage.
ESD can cause damage to the components of a DACS III-2000 system.
Wear an ESD wrist strap when working around the frame.

CAUTION:
Circuit pack damage.
Improper installation can cause damage.
Read all the steps before proceeding.

1. Open the top and bottom latches as far as they go, which is about a 45° angle for each; see Figure 3-6.

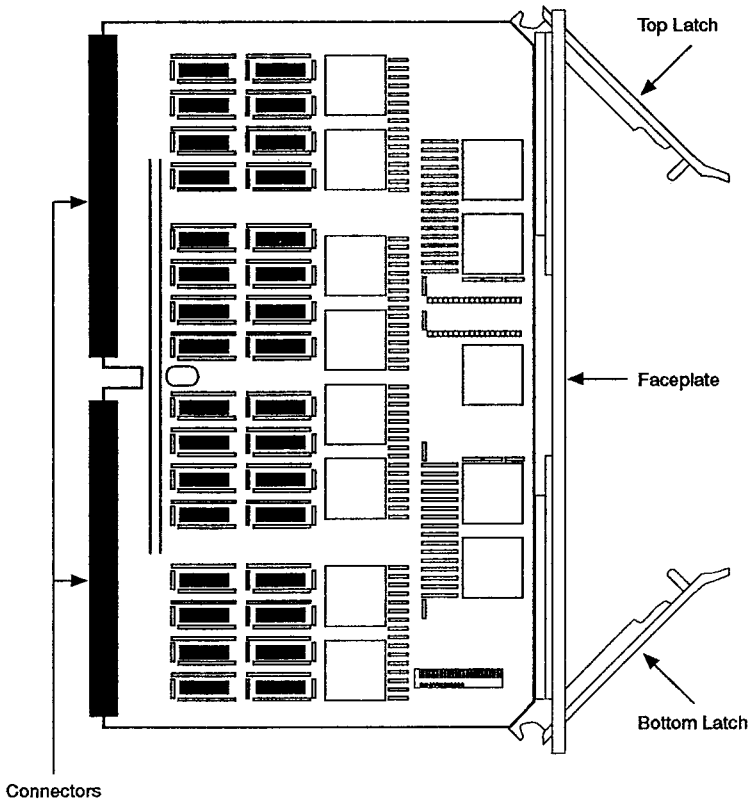

Figure 3-6. Installing DS3SWL CTR Circuit Packs—Step 1

2. Grasp the top (labeled) latch in one hand and the lower (unlabeled) latch in the other; see Figure 3-7.

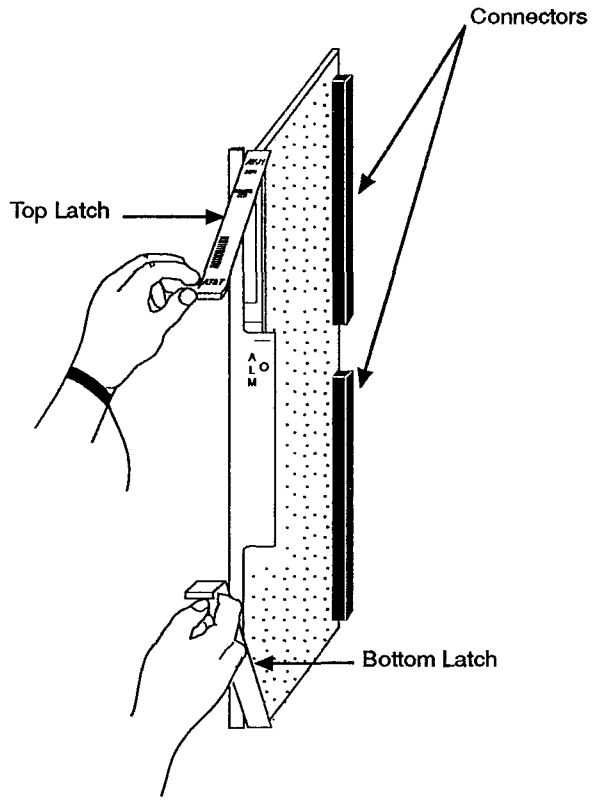

Figure 3-7. Installing DS3SWL CTR Circuit Packs—Step 2

3. Holding the circuit pack in an upright position, slide it into the slot, using one continuous, even-pressured motion, until the circuit pack goes no further; see Figure 3-8. (The backplane is keyed to prevent the circuit pack from being inserted upside down.)

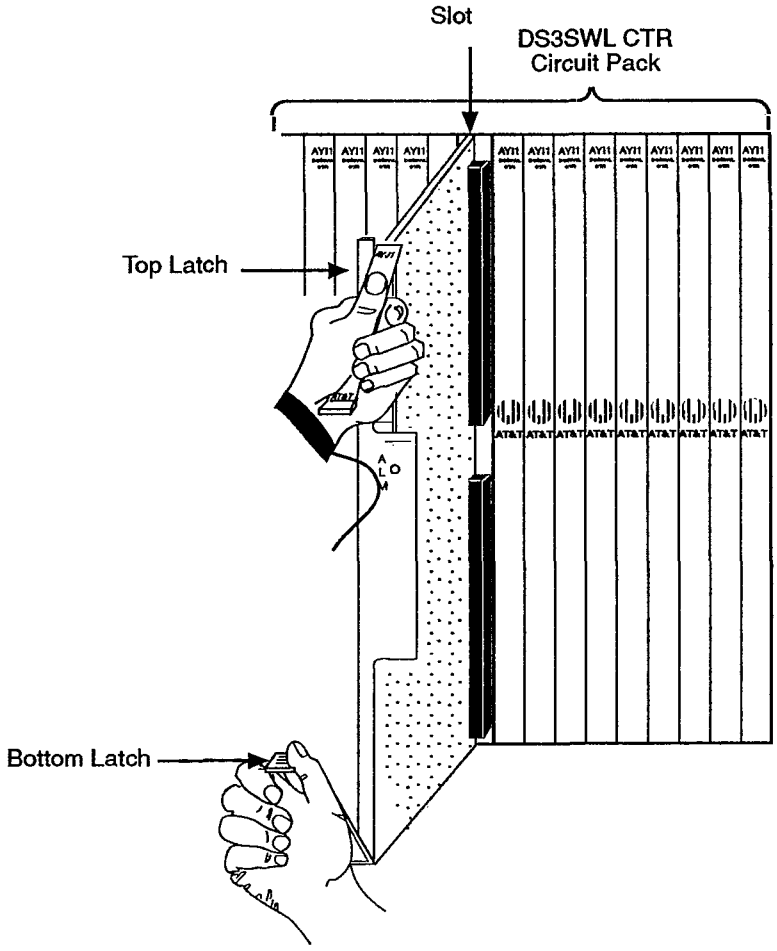

Figure 3-8. Installing DS3SWL CTR Circuit Packs—Step 3

4. Place your thumb on the center of the faceplate and engage the connectors by pushing the circuit pack firmly until it goes no further; see Figure 3-9.

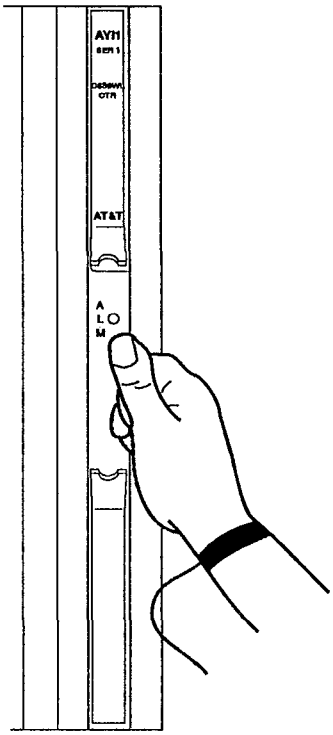

Figure 3-9. Installing DS3SWL CTR Circuit Packs—Step 4

5. Place one hand on each of the latches and simultaneously close the latches so the hooked end of each latch engages the shelf; see Figure 3-10.

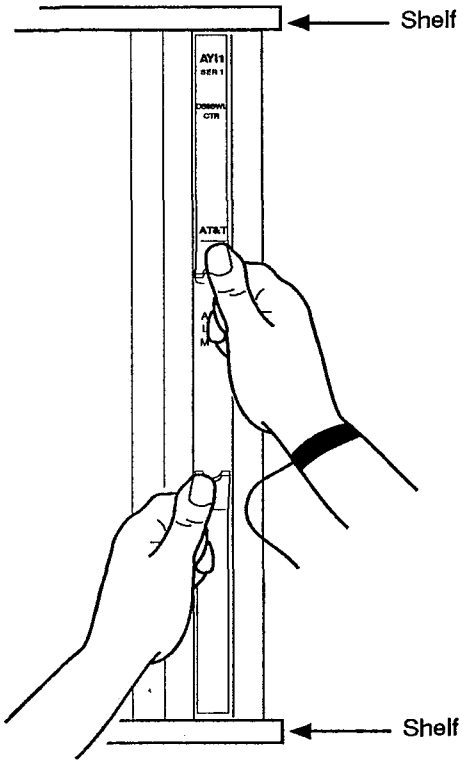

Figure 3-10. Installing DS3SWL CTR Circuit Packs—Step 5

6. Slowly close the latches until they are flush with the faceplate; this seats the circuit pack's connector to the backplane connector.

Procedure 3-4. Removing DS3SWL CTR Circuit Packs

CAUTION:
Electrostatic discharge (ESD) damage.
ESD can cause damage to the components of a DACS III-2000 system.
Wear an ESD wrist strap when working around the frame.

1. Slowly and simultaneously open both latches; as you do the circuit pack disengages from the connectors and starts to come out of the slot.
2. Using equal pressure, grasp the top latch in one hand and the bottom latch in the other hand and remove the circuit pack in one continuous motion.

Main Controller (MC) Module Circuit Packs

The main controller (MC) module contains the following circuit packs:

- central processing unit (CPU)
- memory expansion (MX2)
- secondary storage controller (SSC3)
- enhanced communication interface (ECI2 or ECI5)
- maintenance circuit pack (MTC or MTC2)
- unit interface (UI)
- switch communications interface (SCI or SCI2)

The procedure to replace any of the listed main controller (MC) module circuit packs follows. If you are considering replacing the PRI3 or SEC3 circuit packs, call your system administrator or the next level of technical support before attempting Procedure 3-1, "Installing Circuit Packs" or Procedure 3-2, "Removing Circuit Packs."

Procedure 3-5. Replacing Main Controller (MC) Module Circuit Packs

CAUTION:
Electrostatic discharge (ESD) damage.
ESD can cause damage to the components of a DACS III-2000 system.
Wear an ESD wrist strap when working around the frame.

1. Obtain a new main controller (MC) module circuit pack.
2. Put the main controller (MC) module in the out-of-service maintenance (OOS-MCOND) state by entering:

   ED-STATE-EQPT::MC::OOS-MCOND;

   The system responds with the following message:

   ```
     <TID #n YY-MM-DD HH:MM:SS>
   M  ED STATE EQPT::MC::OOS-MCOND  COMPLD
   ;
   ```

3. Unseat the circuit pack from the slot by carefully operating the latch. If you need detailed instructions, see Procedure 3-2, "Removing Circuit Packs."
4. Insert the new main controller (MC) module circuit pack. If you need detailed instructions, see Procedure 3-1, "Installing Circuit Packs."
5. Reboot the system by simultaneously toggling the RESET ENABLE switch and pressing the RESET button.

During the reset, you may see boot messages on any terminals connected to CILINK-1 or CILINK-2. On CILINK-1, these boot messages are output at 1200 baud. On CILINK-2, the baud rate depends on the type of enhanced communications interface (ECI) circuit pack installed in the frame. For an ECI2, the baud rate is 1200; for an ECI5, 2400.

Reset completion time may be up to 6 minutes for a fully equipped, 2048-size system. Smaller systems should take less time.

- If the system successfully reboots, you will see the following message:

```
login:

  <TID#0 YY-MM-DD HH:MM:SS>
A  001 REPT RST EQPT
   /* LOC:STATE */
   "MC:IS"
;

login:
```

- If the system does not reboot, meaning you do not receive the REPT RST EQPT message shown above or you do receive a boot message of either `BOOT FAIL` or `RESET STOPPED`, call your system administrator or the next level of technical support.

CAUTION:
Incomplete reset of the system.
When main controller (MC) module circuit packs are inserted, some of them do their own reset, but the system may still not be completely reset.
Always manually reset the system with the RESET button even if the system appears to be resetting automatically.

6. If alarms exist on the frame, go to Procedure 9-1, "How to Clear Alarms," to determine the proper corrective action to take.

Line Buildout Settings

Line buildout (LBO) needs to be set on any new output interface circuit pack. The procedure for setting it follows.

Procedure 3-6. Setting Line Buildout (LBO)

CAUTION:
Electrostatic discharge (ESD) damage.
ESD can cause damage to the components of a DACS III-2000 system.
Wear an ESD wrist strap when working around the frame.

Set the LBO on an output interface circuit pack depending on whether it is a protection output circuit pack or a working output circuit pack:

- For a protection output interface circuit pack, set all jumpers to the OUT position shown in Figure 3-11.
- For a working output interface circuit pack:
  1. Determine the type and length of the cables and type of equipment connected to the output interface circuit pack by referring to the office drawings.
  2. Set the LBO to IN or OUT depending on the cable type and length as shown in Tables 3-1 and 3-2.

     While it may appear that there is a conflict in the tables where the setting can be either IN or OUT, the overlap is there by design. The overlap allows you the flexibility to connect to two different locations with two different cable lengths from the same output interface circuit pack and still maintain the integrity of the jumper settings which must be either all vertical (OUT) or all horizontal (IN). The LBO settings are *per pack*, not *per port*.

     See Figure 3-11 for LBO OUT settings and Figure 3-12 for LBO IN settings.

Table 3-1. LBO Settings for Connections to DSX-3

Cable Type	Length Limitations	LBO Setting
734A (728B)	0 to 225 ft. >225 to 450 ft.	IN OUT
735A	0 to 125 ft. >125 to 250 ft.	IN OUT
KS-19224,L2	0 to 75 ft. >75 to 150 ft.	IN OUT

Table 3-2. LBO Settings for Connections to Terminal Equipment

Cable Type	Length Limitations	LBO Setting
734A (728B)	0 to 225 ft. >225 to <675 ft. 675 to 900 ft.	IN IN *or* OUT OUT
735A	0 to 125 ft. >125 to <375 ft. 375 to 500 ft.	IN IN *or* OUT OUT
KS-19224,L2	0 to 75 ft. >75 to <225 ft. 225 to 300 ft.	IN IN *or* OUT OUT

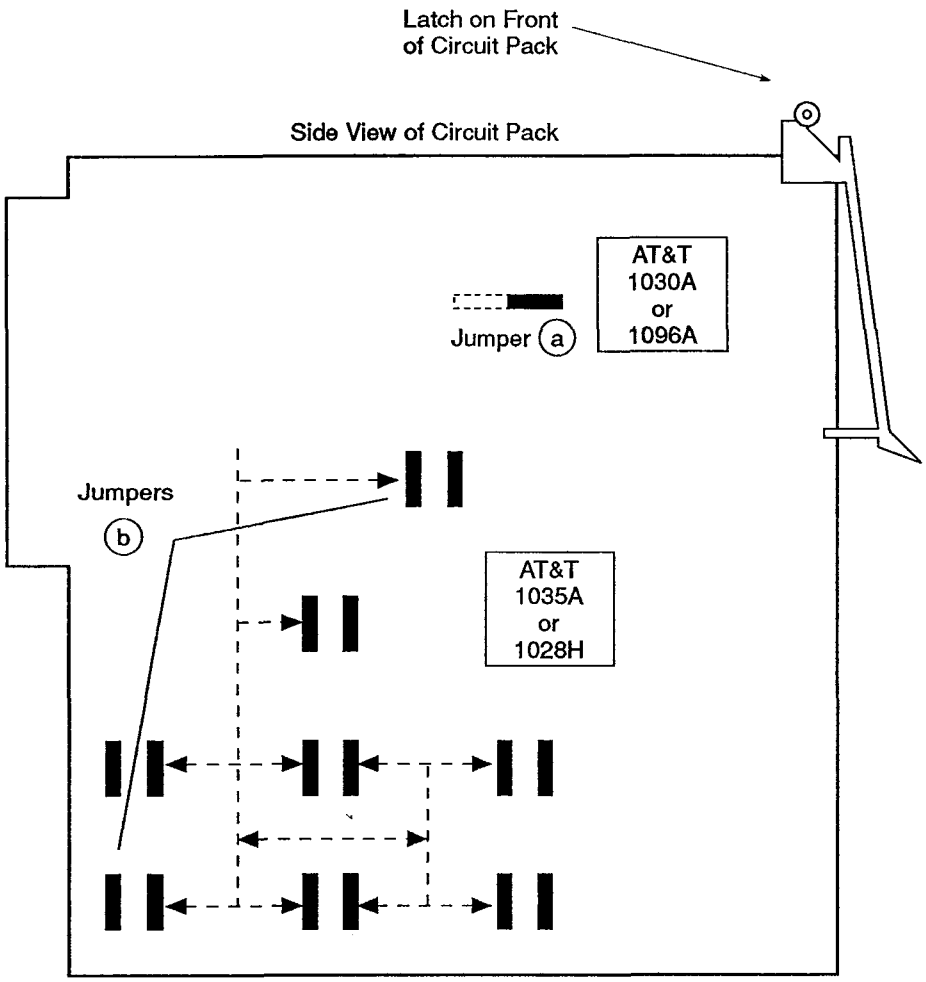

a Jumper must be positioned to the right.

b Sixteen (16) jumpers must be positioned vertically.

Figure 3-11. Line Buildout OUT Settings

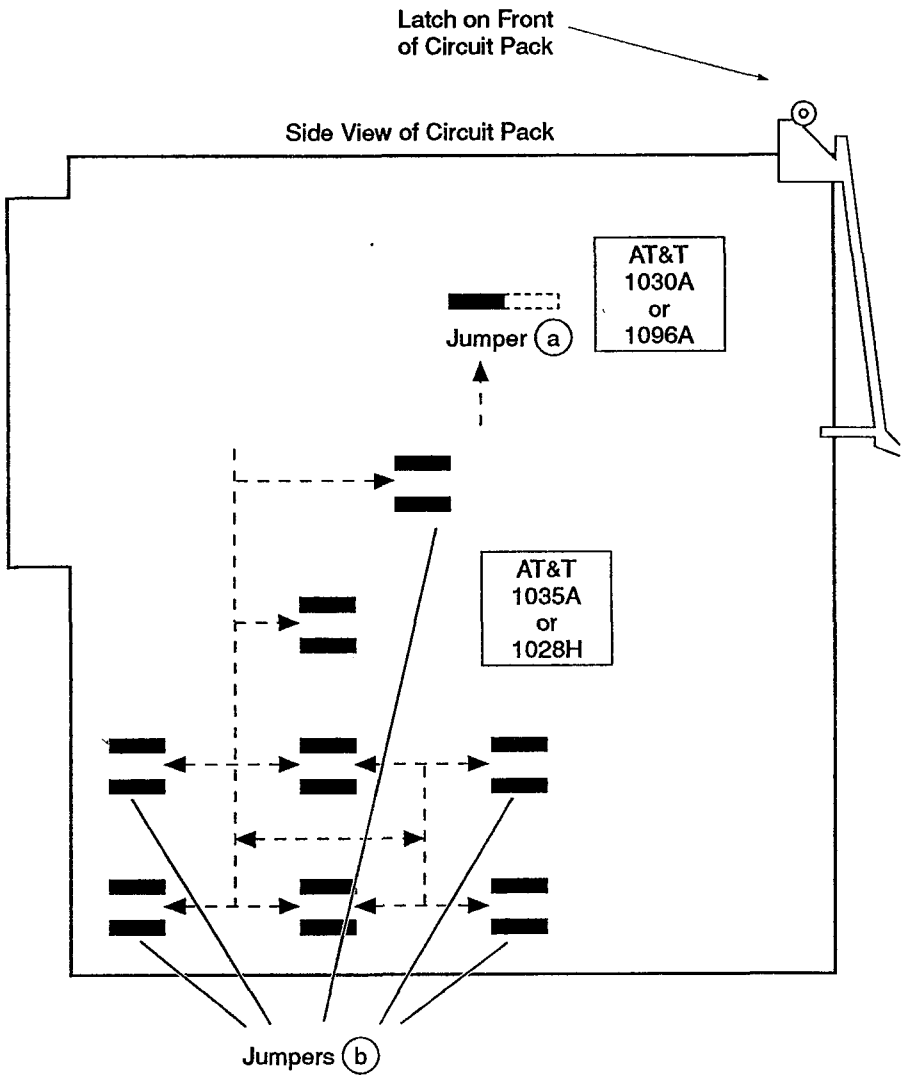

a Jumper must be positioned to the left.

Figure 3-12. Line Buildout IN Settings

Disk Drives, Optical Drives and Optical Cartridges

This section covers topics related to the disk drives, optical drives, and optical cartridges:

- handling disk drives and optical drives
- handling optical cartridges
- inserting and removing optical cartridges
- verifying spare PRI3 and SEC3 circuit packs

Disk Drive and Optical Drive Handling

Handle the disk drives and optical drives for the DACS III-2000 system with the same precautions used for handling other magnetic storage devices:

- Do not subject either drive to shocks or vibrations. (Even a drop of 2" can damage the disk drive.)
- Do not store where the temperature can exceed 50° C (122° F) or where the relative humidity can exceed 80%.

In addition, allow the drives to stabilize at room temperature before installing an optical drive in a frame. This is particularly important for drives that are shipped during cold weather. If you receive a drive during cold weather, it should be unpacked and left sitting at room temperature for at least an hour before installing it in the frame.

Optical Cartridge Handling

The optical cartridges for the DACS III-2000 system (COMCODE 406919084) were designed to withstand the rigors of shipping. The optical cartridges, when enclosed in their plastic cases and wrapped in one layer of bubble wrap, can be reliably mailed or shipped.

Save the optical cartridge's plastic case for future storage.

It is recommended that optical cartridges *not* be left in the optical drive for the following reasons:

- dust can accumulate
- increases wear on the optical drive
- decreases life expectancy of the optical drive

Once removed from their plastic cases, the optical cartridges should be handled carefully and the following cautions observed:

- Keep magnets away from the optical cartridge.
- Store the optical cartridge away from strong magnetic fields, such as those produced by electric motors or large magnets.
- Store the optical cartridges in a dust-free environment.
- Avoid using the optical cartridges where there is likely to be a wide variation in temperature or a high humidity.

  The condensation formed under these conditions may make it impossible for the optical drive to read or write to the optical cartridge.
- Do not store where the temperature can exceed 50° C (122° F) or where the relative humidity can exceed 80%.

  In addition, allow the cartridges to stabilize at room temperature before installing them in an optical drive. This is particularly important for cartridges that are shipped during cold weather. If you receive optical cartridges during cold weather, they should be unpacked and left sitting at room temperature for at least an hour before installing them in the optical drive.
- Avoid dropping the optical cartridges.
- Refrain from touching the optical cartridge's disk surface.
- Never unscrew the back of the optical cartridge.

Optical Cartridge Description

The optical drive for the DACS III-2000 system uses formatted optical cartridges for backing up the release software, database, and alternate maps. All optical drive operations must be performed with approved magneto optical cartridges. Optical cartridges may be ordered using COMCODE 406919084.

The front of the optical cartridge has the manufacturer's label on the silver shutter.

Use the labels, which come with each optical cartridge, for identifying the optical cartridge's contents. The peel-and-stick label should be affixed to the front of the optical cartridge in the "Label Area," shown in Figure 3-13, with the word INDEX at the top. The label wraps over the bottom of the cartridge onto the reverse side. Care must be taken that the label does not cover any part of the write-protect tab. If you need to replace a label, remove the old one before applying the new label.

Figure 3-13 shows the front of an optical cartridge.

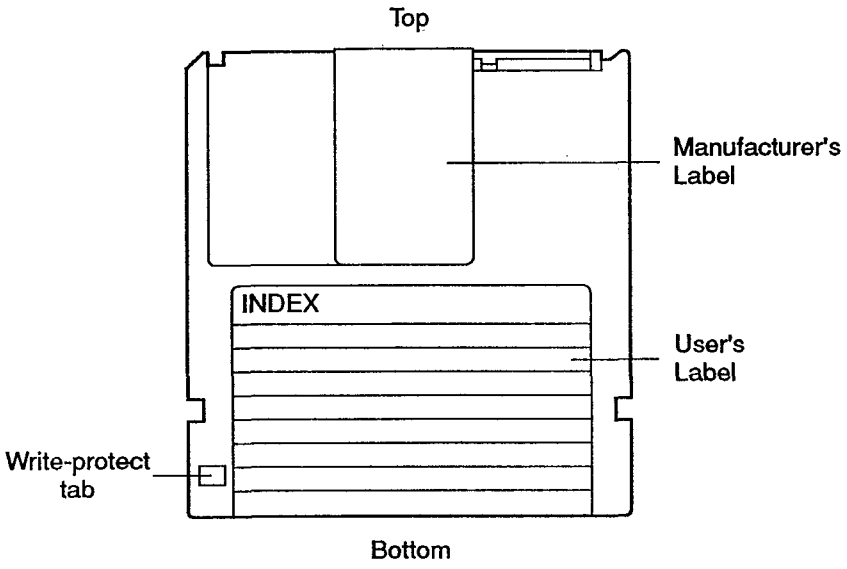

Figure 3-13. Optical Cartridge—Front View

The back of the optical cartridge has the silver shutter and the write-protect tab in the lower right-hand corner. The write-protect tab has two positions:

— With the black square positioned towards the top of the optical cartridge, the write-protect window is closed and writing is possible; in other words write-protection is OFF. See Figure 3-14, drawing A.

— With the black square positioned towards the bottom of the optical cartridge, the write-protect window is open and writing is impossible; in other words write-protection is ON. See Figure 3-14, drawing B.

CAUTION:
Loss of system capabilities.
When the write-protect tab is halfway between the ON and OFF positions, the optical drive (SEC) may not restore. Be sure the write-protect tab is fully locked into either the ON or OFF position, whichever is appropriate for the task you are doing.

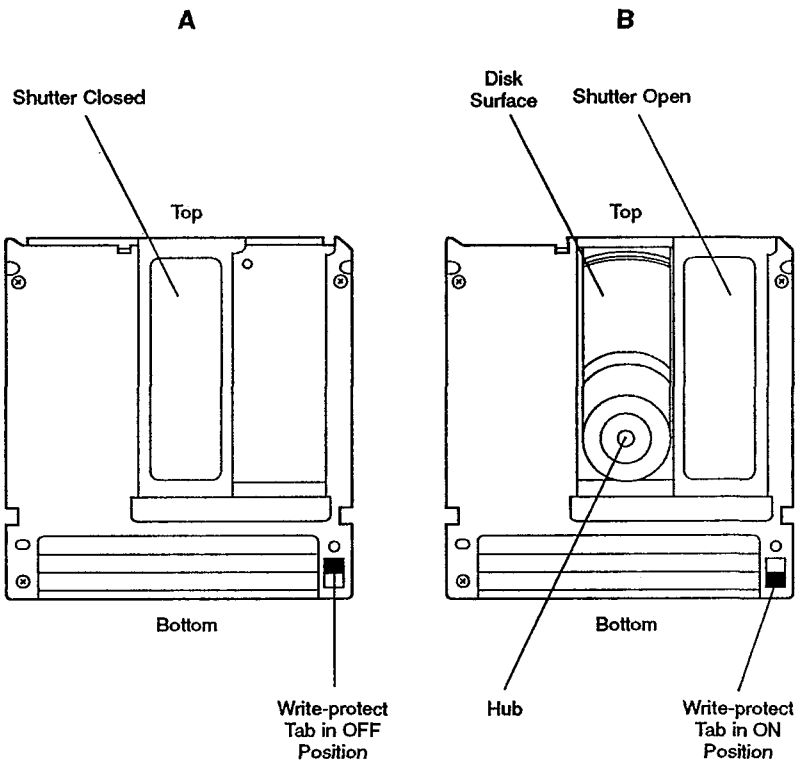

Figure 3-14. Optical Cartridge—Back Views

Optical Cartridge Insertion and Removal

The correct methods for inserting and removing optical cartridges are presented in the procedures that follow.

Procedure 3-7. Inserting Optical Cartridges

CAUTION:
Electrostatic discharge (ESD) damage.
ESD can cause damage to the components of a DACS III-2000 system.
Wear an ESD wrist strap when working around the frame.

CAUTION:
Damage to optical drive.
Attempting to force a magnetic diskette (used with PCs) into an optical drive may damage the drive because the magnetic diskette cannot be seated properly.
Do not force any cartridge or diskette into an optical drive. Check the shutter on each cartridge before insertion to be certain it bears the word "optical."

CAUTION:
Loss of system capabilities.
When the write-protect tab is halfway between the ON and OFF positions, the optical drive (SEC) may not restore.
Be sure the write-protect tab is fully locked into either the ON or OFF position, whichever is appropriate for the task you are doing.

1. Decide where to start this procedure by selecting from the following two options the one that applies to your situation:
   - If you are uncertain if an optical cartridge is in the optical drive (SEC), perform Procedure 3-8 "Removing Optical Cartridges," then return to this procedure at Step 2.
   - If you are certain the optical drive is empty, continue this procedure at Step 2. If you have inserted an SEC3 pack, wait 30 seconds before you insert an optical cartridge.

   Hold the new optical cartridge with the manufacturer's label facing to the right and the write-protect tab at the top left corner of the cartridge, and insert the cartridge into the optical drive until it clicks into place. The active (in use) LED lights for approximately three seconds. Figure 3-15 shows the correct orientation for inserting an optical cartridge. After you insert an optical cartridge, wait 30 seconds to let the cartridge complete its "spin-up" before you enter any of these commands:

```
RST-EQPT::SEC
RTRV-SYSID
DGN-DET-EQPT::SEC
```

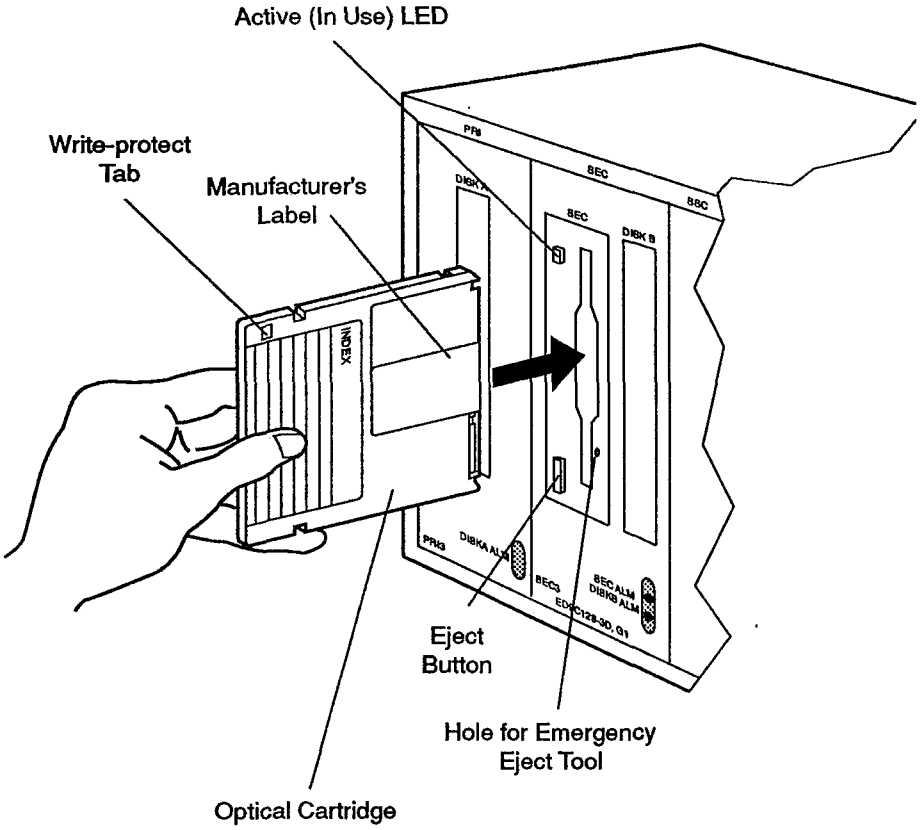

Figure 3-15. Inserting an Optical Cartridge

Procedure 3-8. Removing Optical Cartridges

CAUTION:
Electrostatic discharge (ESD) damage.
ESD can cause damage to the components of a DACS III-2000 system.
Wear an ESD wrist strap when working around the frame.

1. Determine where to begin this procedure by selecting from the following two options the one that applies to your situation:
   - If you are uncertain as to whether there is pending system activity involving the optical drive (SEC), continue at Step 2.
   - If *one* of the following statements is true, continue this procedure at Step 5:
     - — You were sent to this procedure from another procedure where pending system activity involving the optical drive (SEC) was already verified.
     - — You were sent to this procedure from another procedure where the main controller (MC) module was in the out-of-service (OOS) state.
     - — You are otherwise certain there is no pending system activity involving the optical drive (SEC) and the main controller (MC) module is in the in-service (IS) state.
2. Retrieve automatic backup information by entering:

   RTRV-BKUPSCHED-MEM;

   The system responds with the following message:

```
   <TID #n YY-MM-DD HH:MM:SS>
M   RTRV BKUPSCHED MEM::::PRI,,SEC COMPLD
    /* :FROMMEM,,TOMEM:MEMCLASS:INVL,BKUPDAT,BKUPTM:*/
    ":PRI,,SEC:BOTH:,,:"
;
```

3. Check the date (BKUPDAT) and time (BKUPTM) parameters, looking for any backups scheduled during the next five minutes. If BKUPDAT or BKUPTM values do not appear in the message, no backups are scheduled.
   - If no backups are scheduled for the next five minutes, continue this procedure at Step 4.
   - If backups are scheduled for the next half hour, you can *either* wait for the scheduled backup to complete *or* get permission from your system administrator to cancel the scheduled backup (using the SCHED-BKUP-MEM command). When you know the system is ready, continue this procedure at Step 4.

4. Check for any pending commands by entering:

   RTRV-CMD-STAT::::ALL;

   The system responds with the following message:

```
   <TID #n YY-MM-DD HH:MM:SS>
M   RTRV CMD STAT::::ALL COMPLD
    /* CMDCTAG, INPUT CMD, CMDSTAT */
   " <CMDCTAG, INPUT CMD, CMDSTAT> "
;
```

   where

   `INPUT CMD` = the commands that are pending execution

   `CMDSTAT` = the status of the pending command. `IP` means the command is in-progress; `WRTSCE` means the command is waiting for resources

   - If you do *not* find any commands, continue this procedure at Step 5.
   - If you find any pending commands, wait a minute or two, reenter RTRV-CMD-STAT until you receive the message that no commands are executing or waiting for execution, then continue this procedure at Step 5. The system response will look like the following message:

```
  <TID #n YY-MM-DD HH:MM:SS>
M  RTRV CMD STAT::::ALL COMPLD
;
```

5. Look at the active (in use) LED on the optical drive. Figure 3-16 shows the location of the active (in use) LED.

   - If the LED is *not* lighted or flashing, continue this procedure at Step 6.
   - If the LED is lighted or flashing, the optical drive is in use. Wait until the LED is not lighted before continuing this procedure at Step 6.

6. Press the eject button at the bottom of the optical drive (SEC). The active (in use) LED lights until the cartridge ejects. Figure 3-16 shows the location of the eject button.

   After approximately three seconds, the optical cartridge is ejected from the drive about one inch.

   - If the optical cartridge ejected, continue this procedure at Step 7.
   - If the optical cartridge did *not* eject, it may be due to loss of power to the drive, or the SEC3 circuit pack was removed from its slot with a cartridge still in it, or there is a failure of the standard eject mechanism while power is still available. In any case, perform the following steps:

a. Insert the emergency eject tool (COMCODE 406923292) into the hole provided in the optical drive.

Figure 3-16 shows the hole for the emergency tool and the orientation for inserting the tool into the hole.

CAUTION:
Damage to optical drive.
Use of objects like a paper clip to force the optical cartridge to eject can damage the optical drive.
Use only the approved emergency eject tool.

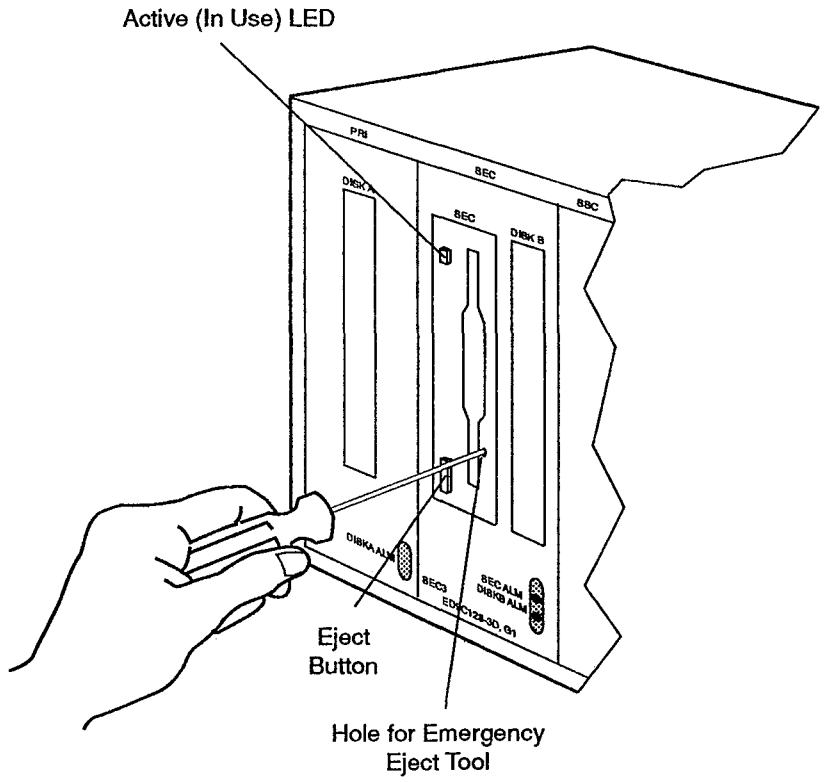

Figure 3-16. Using the Emergency Eject Tool

b. Insert the tool straight back into the hole. Be careful not to tilt the tool towards the top, sides, or bottom of the optical drive as there is the potential for damage to the drive. Improper insertion may also prevent the cartridge from ejecting.

c. Exert enough pressure on the tool until the cartridge pops out approximately one inch. The active (in use) LED does *not* light.

d. Continue this procedure at Step 7.

7. Pull the optical cartridge out of the optical drive. Figure 3-17 shows the normal removal of an optical cartridge.

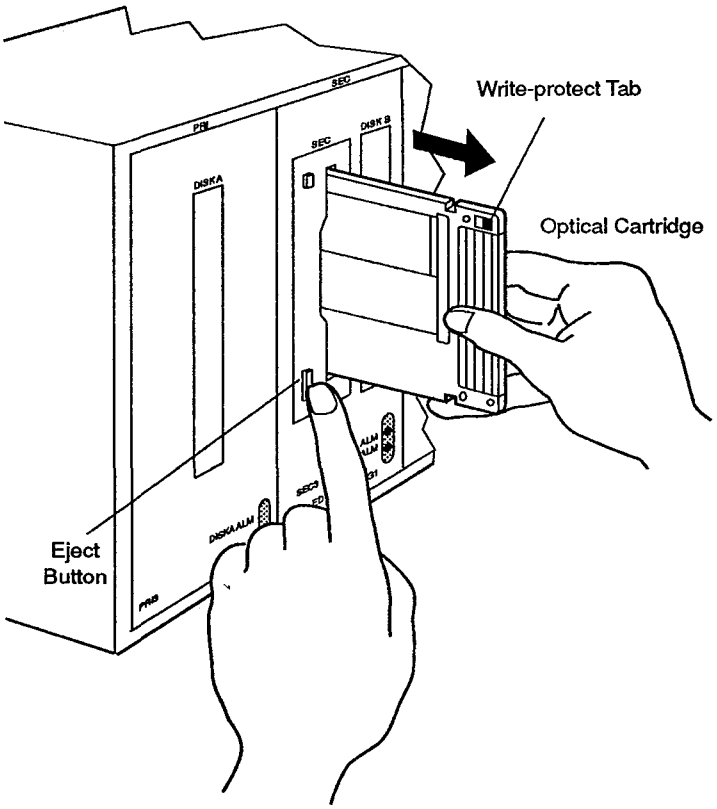

Figure 3-17. Removing an Optical Cartridge

Spare PRI3 and SEC3 Circuit Pack Verification

Wherever a DACS III-2000 system is installed, the functionality of the spare PRI3 and SEC3 circuit packs that are kept on hand for use during troubleclearing activities must be tested. The spare circuit packs are PRI3, which contains the DISKA hard disk drive, and SEC3, which contains the DISKB hard disk drive and optical drive (SEC).

The procedures for testing spare PRI3 and SEC3 circuit packs follow. These procedures should be used only when both DISKA and DISKB are present and operating normally.

Procedure 3-9. Verifying Spare PRI3 Circuit Packs (DISKA)

CAUTION:
Service interruption.
Failure to follow the procedure in the exact order as written affects traffic on the frame being used for verification.
If you are not thoroughly familiar with the DACS III-2000 system and this procedure, read Procedure 3-9 completely before executing it. If you still are uncertain how to proceed, call your system administrator or the next level of technical support.

CAUTION:
Electrostatic discharge (ESD) damage.
ESD can cause damage to the components of a DACS III-2000 system. Wear an ESD wrist strap when working around the frame.

1. Check the system for alarms by entering:

   RTRV-ALM-NE;

   - If alarms are found, refer to "Problems Identified Through Alarms" in Chapter 9 of this document to clear the alarms.
   - If no alarms are found or the alarms have been cleared, continue this procedure at Step 2.

2. Obtain a spare PRI3 circuit pack and label it "SPARE PRI3."
3. Back up the system program, database, and alternate maps to the optical drive (SEC); see Procedure 8-3, "Making Backups to Optical Cartridges."
4. Place the main controller (MC) module into the out-of-service maintenance condition (OOS-MCOND) state by entering:

   ED-STATE-EQPT::MC::OOS-MCOND;

   The system responds by reporting a major alarm and a MAN condition type for the main controller (MC) module.

5. Park the heads on the DISKA hard disk drive by entering:

   RMV-EQPT::DISKA;

   This protects DISKA during handling. When DISKA is in the OOS-FLT state, the FAILURE LED associated with DISKA will light. The system will also respond by reporting a minor alarm and a MAN condition type for DISKA.

6. Remove the PRI3 circuit pack from the main controller (MC) module and label it "WORKING PRI3." If you need detailed instructions, see Procedure 3-2, "Removing Circuit Packs"

7. Install the spare PRI3 circuit pack that is to be verified into the main controller (MC) module. If you need detailed instructions, see Procedure 3-1, "Installing Circuit Packs"

8. Place the DISKB hard disk drive into the out-of-service fault (OOS-FLT) state by entering:

   RMV-EQPT::DISKB::YES;

   The system will report a major alarm on DISKB with a MAN condition type.

   The force parameter (YES) is being used to remove DISKB from service because under normal conditions, both disk drives cannot be in the out-of-service fault (OOS-FLT) state at the same time. This step is necessary before formatting spare DISKA.

9. Place the spare DISKA hard disk drive in the out-of-service maintenance condition (OOS-MCOND) state by entering:

   ED-STATE-EQPT::DISKA::OOS-MCOND;

   The system initializes, that is removes the contents of, DISKA and clears the alarm.

10. Format the spare DISKA hard disk drive by entering:

    CPY-MEM:::INIT,DISKA,FORMAT;

    - If the system responds with the COMPLD message, DISKA was formatted; the PRI3 verification process is complete. To return the system to its original state, continue this procedure at Step 11.
    - If the system responds with the DENY message, DISKA was not formatted. Call your system administrator or the next level of technical support.

11. Park the heads on the spare DISKA hard disk drive by entering:

    RMV-EQPT::DISKA;

    This protects the spare DISKA during handling. The system responds with a major alarm for DISKA and the DISKA alarm LED lights.

12. Remove the verified spare PRI3 circuit pack from the main controller (MC) module and add the verification date to the label. If you need detailed instructions, see Procedure 3-2, "Removing Circuit Packs."

13. Restore the DISKB hard disk drive by entering:

    RST-EQPT::DISKB:::YES;

    The system responds by clearing the alarm on DISKB; the red alarm LED is no longer lighted.

    The force parameter (**YES**) is being used to restore DISKB to service because under normal conditions, a disk drive cannot be restored when both disk drives are in the out-of-service fault (OOS-FLT) state. This step is necessary before restoring DISKA, which will be rebuilt from DISKB.

14. Install the PRI3 circuit pack, labeled "WORKING PRI3," into the main controller (MC) module. If you need detailed instructions, see Procedure 3-1, "Installing Circuit Packs."

15. Restore the DISKA hard disk drive to service by entering:

    RST-EQPT::DISKA;

    The restore command automatically copies the contents of DISKB to DISKA. The LEDs on the drives light as the copying takes place.

    - If the system responds with the COMPLD message, DISKA was restored to service. Continue this procedure at Step 16.
    - If the system responds with the DENY message, DISKA was not restored. Call your system administrator or the next level of technical support; then continue this procedure at Step 16.

16. Restore the main controller (MC) module to service by entering:

    RST-EQPT::MC::PRI;

    PRI must be specified in this command because we forced DISKB back into service. This step may take up to three minutes.

    - If the system responds with the COMPLD message, the main controller (MC) module is restored to service and the major alarm is cleared.

      You have successfully completed this procedure.
    - If the system responds with the DENY message, the main controller (MC) module was not restored. Continue this procedure at Step 17.

17. Having received the DENY message in Step 16, reboot the system by simultaneously toggling the RESET ENABLE switch and pressing the RESET button.

    During the reset, you may see boot messages on any terminals connected to CILINK-1 or CILINK-2. On CILINK-1, these boot messages are output at 1200 baud. On CILINK-2, the baud rate depends on the type of enhanced communications interface (ECI) circuit pack installed in the frame. For an ECI2, the baud rate is 1200; for an ECI5, 2400.

Reset completion time may be up to 6 minutes for a fully equipped, 2048-size system. Smaller systems should take less time.

- If the system successfully reboots, you will see the following message:

```
login:

  <TID#0 YY-MM-DD HH:MM:SS>
A  001 REPT RST EQPT
   /* LOC:STATE */
   "MC:IS"
;

login:
```

  With the system successfully rebooted, you have completed the procedure for verifying a spare PRI3 circuit pack.

- If the system does not reboot, meaning you do not receive the REPT RST EQPT message shown above or you receive a boot message of either `BOOT FAIL` or `RESET STOPPED`, call your system administrator or the next level of technical support.

Procedure 3-10. Verifying Spare SEC3 Circuit Packs (DISKB and SEC)

CAUTION:
Service interruption.
Failure to follow the procedure in the exact order as written affects traffic on the frame being used for verification.
If you are not thoroughly familiar with the DACS III-2000 system and this procedure, read Procedure 3-10 completely before executing it. If you still are uncertain how to proceed, call your system administrator or the next level of technical support.

CAUTION:
Electrostatic discharge (ESD) damage.
ESD can cause damage to the components of a DACS III-2000 system. Wear an ESD wrist strap when working around the frame.

1. Obtain a spare SEC3 circuit pack and label it "SPARE SEC3."
2. Obtain a spare (blank) optical cartridge. Reserve this cartridge for use in Steps 16 and 17. Do *not* use one of your backup optical cartridges for Steps 16 and 17.
3. Check the system for alarms by entering:

   RTRV-ALM-NE;

   - If alarms are found, refer to "Problems Identified Through Alarms" in Chapter 9 of this document to clear the alarms.
   - If no alarms are found or the alarms have been cleared, continue this procedure at Step 4.
4. Retrieve automatic backup information by entering:

   RTRV-BKUPSCHED-MEM;

   The system responds with the following message:

```
  <TID #n YY-MM-DD HH:MM:SS>
M  RTRV BKUPSCHED MEM::::PRI,,SEC COMPLD
   /* :FROMMEM,,TOMEM:MEMCLASS:INVL,BKUPDAT,BKUPTM:*/
   ":PRI,,SEC:BOTH:,,:"
;
```

5. Check the date (BKUPDAT) and time (BKUPTM) parameters, looking for any backups scheduled during the next half hour. If BKUPDAT or BKUPTM values do not appear in the message, no backups are scheduled.
   - If no backups are scheduled for the next half hour, continue this procedure at Step 6.

- If backups are scheduled for the next half hour, you can *either* wait for the scheduled backup to complete *or* get permission from your system administrator to cancel the scheduled backup (using the SCHED-BKUP-MEM command). When you know the system is ready, continue this procedure at Step 6.

6. Check for any pending commands by entering:

RTRV-CMD-STAT:::ALL;

The system responds with the following message:

```
  <TID #n YY-MM-DD HH:MM:SS>
M  RTRV CMD STAT:::ALL COMPLD
   /* CMDCTAG, INPUT CMD, CMDSTAT */
   " <CMDCTAG, INPUT CMD, CMDSTAT> "
;
```

where

INPUT CMD = the commands that are pending execution

CMDSTAT = the status of the pending command. IP means the command is in-progress; WRTSCE means the command is waiting for resources

- If you do *not* find any pending commands, continue this procedure at Step 7.
- If you find any pending commands, wait a minute or two, reenter RTRV-CMD-STAT until you receive the message that no commands are executing or waiting for execution, then continue this procedure at Step 7.

  The system response would look like the following message:

```
  <TID #n YY-MM-DD HH:MM:SS>
M  RTRV CMD STAT:::ALL COMPLD
;
```

7. Check for an optical cartridge in the optical drive (SEC).

- If an optical cartridge is present and it is the one you want to use for backups, continue this procedure at Step 8.
- If an optical cartridge is present, but you are not sure if it is the one you want to use, continue this procedure at Step 7a.
- If an optical cartridge is *not* present, insert a a blank optical cartridge. After inserting, wait 30 seconds to allow the cartridge time to complete its "spin-up", before entering any of these commands:

  RST-EQPT::SEC
  RTRV-SYSID
  DGN-DET-EQPT::SEC;

a. Look at the LED on the optical drive (SEC).

- If you find the LED is *not* lighted or flashing, continue this procedure at Step 7b.

- If you find the LED is lighted or flashing, wait until the LED goes out, then continue this procedure at Step 7b.

b. Press the eject button on the optical drive and remove the optical cartridge. If you need detailed instructions or the optical cartridge does not eject, see Procedure 3-8, "Removing Optical Cartridges."

8. Back up the system program, database, and alternate maps to the optical drive (SEC). If you need detailed instructions, see Procedure 8-3, "Making Backups to Optical Cartridges."

9. Remove the optical cartridge when the backup is complete.

10. Place the main controller (MC) module into the out-of-service maintenance condition (OOS-MCOND) state by entering:

```
ED-STATE-EQPT::MC::OOS-MCOND;
```

The system responds by reporting a major alarm and a MAN condition type for the main controller (MC) module.

11. Park the heads on the DISKB hard disk drive by entering:

```
RMV-EQPT::DISKB;
```

This protects DISKB during handling. When DISKB is in the OOS-FLT state, the FAILURE LED associated with DISKB will light. The system will also generate an autonomous minor alarm message with the MAN condition type for DISKB.

- If the system responds with the COMPLD message, continue this procedure at Step 12.
- If the system responds with the DENY message, call your system administrator or the next level of technical support.

12. Place the optical drive (SEC) into the out-of-service fault (OOS-FLT) state by entering:

```
RMV-EQPT::SEC;
```

The system responds by reporting a minor alarm and a MAN condition type for the optical drive (SEC).

- If the system responds with the COMPLD message, continue this procedure at Step 13.
- If the system responds with the DENY message, call your system administrator or the next level of technical support.

13. Remove the SEC3 circuit pack from the main controller (MC) module and label it "WORKING SEC3." If you need detailed instructions, see Procedure 3-2, "Removing Circuit Packs."

14. Install the spare SEC3 circuit pack that is to be verified into the main controller (MC) module. If you need detailed instructions, see Procedure 3-1, "Installing Circuit Packs."

15. Check the system response to see if the optical drive (SEC) restored autonomously and if the alarm cleared. The message should show the optical drive (SEC) in the in-service (IS) state.

```
  <TID #n YY-MM-DD HH:MM:SS>
A <ASEQ> REPT RST EQPT
   /* LOC:STATE */
   " SEC:IS "
;
```

   - If the system response shows that the optical drive (SEC) restored autonomously to the in-service (IS) state, continue this procedure at Step 16.
   - If the system response does *not* show that the optical drive (SEC) restored to the in-service (IS) state, continue this procedure at Step 16.

16. Restore the optical drive (SEC) to service by entering:

```
RST-EQPT::SEC;
```

   - If the system responds with the COMPLD message, SEC was restored to service. If no optical cartridge was present in SEC, the system generates a REPT EXCPTN SYS message. Continue this procedure at Step 17.
   - If the system responds with the DENY message, SEC was not restored to service. Call your system administrator or the next level of technical support.

17. Insert the spare (blank) optical cartridge, which you obtained in Step 2, into the optical drive (SEC). Do *not* use a backup cartridge as its contents will be erased.

18. Format the optical cartridge in the optical drive (SEC) by entering:

```
CPY-MEM:::INIT,SEC,FORMAT;
```

   - If the system responds with the COMPLD message, the optical cartridge in SEC was formatted. Continue this procedure at Step 19.
   - If the system responds with the DENY message, the optical cartridge in SEC was not formatted. Call your system administrator or the next level of technical support.

19. Place the DISKA hard disk drive into the out-of-service fault (OOS-FLT) state by entering:

```
RMV-EQPT::DISKA::YES;
```

   The system will report a major alarm on DISKA and a MAN condition type.

The force parameter (YES) is being used to remove DISKA from service because under normal conditions, both disk drives cannot be in the out-of-service fault (OOS-FLT) state at the same time. This step is necessary before formatting spare DISKB.

20. Place the spare DISKB hard disk drive in the out-of-service maintenance condition (OOS-MCOND) state by entering:

    ED-STATE-EQPT::DISKB::OOS-MCOND;

    The system initializes (removes the contents of) DISKB and clears the alarm.

21. Format the DISKB hard disk drive by entering:

    CPY-MEM:::INIT,DISKB,FORMAT;

    - If the system responds with the COMPLD message, DISKB was formatted. Continue this procedure at Step 22.
    - If the system responds with the DENY message, DISKB was not formatted. Record the DENY message and any autonomous messages for use at the end of this procedure. Continue this procedure at Step 23.

22. Park the heads on the spare DISKB hard disk drive by entering:

    RMV-EQPT::DISKB;

    The system will report a major alarm and a MAN condition type for DISKB, and the DISKB alarm LED lights.

    - If the system responds with the COMPLD message, continue this procedure at Step 23.
    - If the system responds with the DENY message, record the DENY message and any autonomous messages for use at the end of this procedure. Continue this procedure at Step 23.

23. Place the spare optical drive (SEC) into the out-of-service fault (OOS-FLT) state by entering:

    RMV-EQPT::SEC;

    The system will report a minor alarm on SEC and a MAN condition type.

    - If the system responds with the COMPLD message, continue this procedure at Step 24.
    - If the system responds with the DENY message, record the DENY message and any autonomous messages for use at the end of this procedure. Continue this procedure at Step 24.

24. Remove the spare optical cartridge by pressing the eject button. If you need detailed instructions, see Procedure 3-8, "Removing Optical Cartridges."

25. Remove the spare SEC3 circuit pack that was verified from the main controller (MC) module, and add the verification date to the label. If you need detailed instructions, see Procedure 3-2, "Removing Circuit Packs."

26. Restore the DISKA hard disk drive by entering:

    RST-EQPT::DISKA:::YES;

    The system reports the clearing of the major alarm on DISKA.

    The force parameter (**YES**) is being used to restore DISKA to service because under normal conditions, a disk drive cannot be restored when both disks are in the out-of-service fault (OOS-FLT) state. This step is necessary before restoring DISKB which will be rebuilt from DISKA.

27. Install the SEC3 circuit pack, labeled "WORKING SEC3," into the main controller (MC) module. If you need detailed instructions, see Procedure 3-1, "Installing Circuit Packs."

28. Check the system response to see if the optical drive (SEC) restored autonomously and if the alarm cleared. The message should show the optical drive (SEC) in the in-service (IS) state.

```
  <TID #n YY-MM-DD HH:MM:SS>
A <ASEQ> REPT RST EQPT
  /* LOC:STATE */
  " SEC:IS "
;
```

    - If the system response shows that the optical drive (SEC) restored to the in-service (IS) state, continue this procedure at Step 30.
    - If the system response does *not* show that the optical drive (SEC) restored to the in-service (IS) state, continue this procedure at Step 29.

29. Restore the optical drive (SEC) to service by entering:

    RST-EQPT::SEC;

    - If the system responds with the COMPLD message, SEC was restored to service. If no optical cartridge was present in SEC, the system generates a REPT EXCPTN SYS message. Continue this procedure at Step 30.
    - If the system responds with the DENY message, SEC was not restored. Call your system administrator or the next level of technical support.

30. If an optical cartridge was found in the optical drive in Step 7, return it to the optical drive (SEC).

31. Restore the DISKB hard disk drive to service by entering:

    RST-EQPT::DISKB;

    This step takes approximately one minute. The system reports the clearing of the DISKB alarm.

- If the system responds with the COMPLD message, DISKB was restored to service and the alarm cleared. Continue this procedure at Step 32.
- If the system responds with the DENY message, DISKB was not restored. Call your system administrator or the next level of technical support.

32. Restore the main controller (MC) module to service by entering:

    RST-EQPT::MC::PRI;

    This step may take up to three minutes.

    - If the system responds with the COMPLD message, the main controller (MC) module was restored to service and the major alarm cleared. You have completed this procedure.

      If any problems were noted in Step 21, Step 22, or Step 23, retrieve the state of DISKA and DISKB by entering:

      RTRV-STATE-EQPT::DISKA&DISKB;

      Call your system administrator or the next level of technical support.
    - If the system responds with the DENY message, the main controller (MC) module was not restored. Record the DENY message and any autonomous messages for use at the end of this procedure. Continue this procedure at Step 33.

33. Having received the DENY message in Step 32, reboot the system by simultaneously toggling the RESET ENABLE switch and pressing the RESET button.

    During the reset, you may see boot messages on any terminals connected to CILINK-1 or CILINK-2. On CILINK-1, these boot messages are output at 1200 baud. On CILINK-2, the baud rate depends on the type of enhanced communications interface (ECI) circuit pack installed in the frame. For an ECI2, the baud rate is 1200; for an ECI5, 2400.

    Reset completion time may be up to 6 minutes for a fully-equipped 2048-size system. Smaller systems should take less time.

    - If the system successfully reboots, you will see the following message:

```
login:

  <TID#0 YY-MM-DD HH:MM:SS>
A  001 REPT RST EQPT
   /* LOC:STATE */
   "MC:IS"
 ;

login:
```

With the system successfully rebooted, you have completed the procedure for verifying a spare SEC3 circuit pack. If any problems were noted in Step 21, Step 22, Step 23, or Step 32, report them to your system administrator or the next level of technical support.

- If the system does not reboot, meaning you do not receive the REPT RST EQPT message shown above or you do receive a boot message of either `BOOT FAIL` or `RESET STOPPED`, report this problem and any others that may have occurred in Step 21, Step 22, Step 23, or Step 32 to your system administrator or the next level of technical support.

Circuit Pack Returns

The procedure for returning failed circuit packs for repair or replacement contains two sections; one for employees of AT&T's Network Services Division (NSD); one for all other companies.

Select the correct section for your organization.

Procedure 3-11. Returning Circuit Packs for Repair

AT&T Network Services Division (NSD) Returns

1. Have ready the following information:
   - your current order number (If one is not available the customer service representative will assign one).
   - the circuit pack name and equipment code. For example: DS3IN INTFC circuit pack, code ARW1B, or STS1IN INTFC circuit pack, code ARW11
   - quantity being replaced
   - FML code (available from your FML code consultant)
   - geographic location code (available from your FML code consultant)
   - NSD organization code
   - contact name and phone number
   - "ship to" address
2. Place a call to the appropriate service center and order a replacement circuit pack.

Returns From All Other Companies

Contact your equipment ordering coordinator.

Acceptance

4

Contents

Perform Visual Inspection 4-2
Check I/O Bay(s) 4-4
Check Switch Bay(s) 4-10
Initialize System and Load Software 4-12
Set System Date and Time 4-13
Check Unused Snider Links 4-14
Provision I/O Bay(s) 4-16
Test Frame Alarms 4-22
Test Cable Between I/O Bays 4-26
Verify External Cables 4-31
Check Protection Switch Function 4-32
Test Alarm and Telemetry Outputs 4-35
Test Fan Units on 2048-size System 4-40
- Testing the High Performance ED9C130-30,G3 Fan Unit 4-41
- Testing the Standard ED2C906-30,G1 Fan Unit 4-46

Acceptance

4

Acceptance checks the functionality of a newly installed system. There are 13 tasks in acceptance. Perform the tasks in the following order:

1. Perform visual inspection.
2. Check I/O bay(s).
3. Check switch bay(s).
4. Initialize system and load software.
5. Set system date and time.
6. Check unused Snider links.
7. Provision I/O bay(s).
8. Test frame alarms.
9. Test cable between I/O bays.
10. Verify external cables.
11. Check protection switch function.
12. Test alarm and telemetry outputs.
13. Test fan units on 2048-size system.

This chapter gives the procedures for each task or refers you to another document when appropriate.

CAUTION:
Electrostatic discharge (ESD) damage.
ESD can cause damage to the components of a DACS III-2000 system.
Wear an ESD wrist strap when working around the frame.

Perform Visual Inspection

When the DACS III-2000 system has been installed, the first task is to check for physical damage that may have occurred during shipping or installation. The specific areas to check are described in the following procedure.

Procedure 4-1. Performing Visual Inspections

1. Refer problems that are not easily corrected to the installation group.
2. Check both the front and back of the frame for damage that may have occurred during transportation or the mounting of the equipment. For example, check for dents or broken mountings.
3. At the front of the frame:
   a. Look over shelf mountings to verify that shelves are properly aligned and securely mounted.
   b. Verify that all circuit packs are completely engaged. If checking a switch bay, also verify that the PRI3 and SEC3 circuit packs are securely engaged.
   c. If you have electromagnetic interference (EMI) shields, check that they are mounted securely and not damaged.
4. At the back of the frame:
   a. If the backplane has metal covers, remove them.
   b. Look for broken or bent pins near the edges of each printed backplane panel; damage can occur to these pins even with covers installed.
   c. Look over the multicolored cable connectors on the backplane to verify that connectors are neatly terminated and plugged in securely.
   d. Verify that the metal covers are mounted securely, with screws, over the backplane panels.
   e. Reinstall the metal covers on the backplane.
5. When inspecting a switch bay, check that the local TTY1 terminal is connected in one of two ways:
   - behind the main controller (MC) module—to the TTY1 connector using an ED2C646-30, G2 adapter
   - at the front of the bay—to the status panel at the TTY1 connector using an ED2C646-30, G2 adapter

CAUTION:
Damage to ECI2 (or ECI5) circuit pack.
Electrical shorting.
Never connect terminals to both the TTY1 connector at the back of the frame and the TTY1 connector on the status panel at the front of the frame.

6. Verify that the DACS III-2000 and any DSX-3 bays have been stamped with the office relay rack identification shown on the office drawings.
7. Check for the presence of the following circuit packs that are required for Release 4.0:
   - SSC3 circuit pack (AWP12)
   - PRI3 circuit pack (ED9C127-30,G1)
   - SEC3 circuit pack (ED9C128-30,G1)
   - ECI2 circuit pack (AWP4B) or ECI5 circuit pack (AWP11)
   - MX2 circuit pack (AWR9)
8. Notice the new MTC2 circuit pack (AWR8) and the enhanced status panel (ED2C937-30,G2) that are shipped automatically with new systems.

Check I/O Bay(s)

The second task during acceptance is to check the input/output (I/O) bays, making sure that circuit packs have been properly installed in the correct locations and power packs are installed and functioning.

The input and output circuit packs are installed in sets of four consisting of two input interface circuit packs (STS1IN INTFC or DS3IN INTFC) and two output interface circuit packs (STS1OUT INTFC or DS3OUT INTFC). These pairs must reside in corresponding slots of each module; for example, if slots 1 and 2 of the input module are occupied, slots 1 and 2 of the output module must also contain interface circuit packs.

The circuit packs must be installed in odd-even pairs where the odd number is the lower number. For example, the pair must be in slots 3 and 4 or 5 and 6; not 4 and 5.

The procedure for checking the I/O bays follows.

Procedure 4-2. Checking I/O Bay(s)

1. At each input interface module:
   a. Verify that the unit controller and the two protection switch circuit packs are properly installed; for the locations, see Quadrant 2 in Figure 4-1 for DS3 circuit packs and in Figure 4-2 for STS-1 circuit packs.
   b. Verify that the two protection interface circuit packs are properly installed in positions P1 and P2; for the locations, see Quadrant 2 in Figure 4-1 for DS3 circuit packs and in Figure 4-2 for STS-1 circuit packs.
   c. Verify that the circuit packs are properly installed in the working locations; see slots 1 through 30 in Figure 4-1 for DS3 circuit packs and in Figure 4-2 for STS-1 circuit packs.
   d. Verify that bus extender (BUS EXT) circuit packs are installed in all unused slots.
2. At each output interface module:
   a. Verify that the unit controller and the two protection switch circuit packs are properly installed; for the locations, see Quadrant 2 in Figure 4-3 for DS3 circuit packs and in Figure 4-4 for STS-1 circuit packs.
   b. Verify that the two protection interface circuit packs are properly installed in positions P1 and P2; for the locations, see Quadrant 2 in Figure 4-3 for DS3 circuit packs and in Figure 4-4 for STS-1 circuit packs.

c. Verify that the output interface circuit packs are properly installed in the working locations; see slots1 through 30 in Figure 4-3 for DS3 circuit packs and in Figure 4-4 for STS-1 circuit packs.

d. If the unit is provisioned for the alarm indication signal (AIS) detection feature (DS3 circuit packs only) verify that slots 29 and 30 contain AISDET circuit packs and that the corresponding slots in the DS3IN module contain bus extender (BUS EXT) circuit packs. The frame should have an AISDET label.

e. Verify that bus extender (BUS EXT) circuit packs are installed in all unused slots.

   For an STS-1 I/O bay on a system powered by dual power, verify that slots 27 through 30 on the input and output modules contain BUS EXT packs.

3. Verify that each power circuit pack is installed and functioning; the green LEDs on each of the power circuit packs in the input and output modules should be lighted. (Depending on your system's configuration, you will have either two or three LEDs to check.)

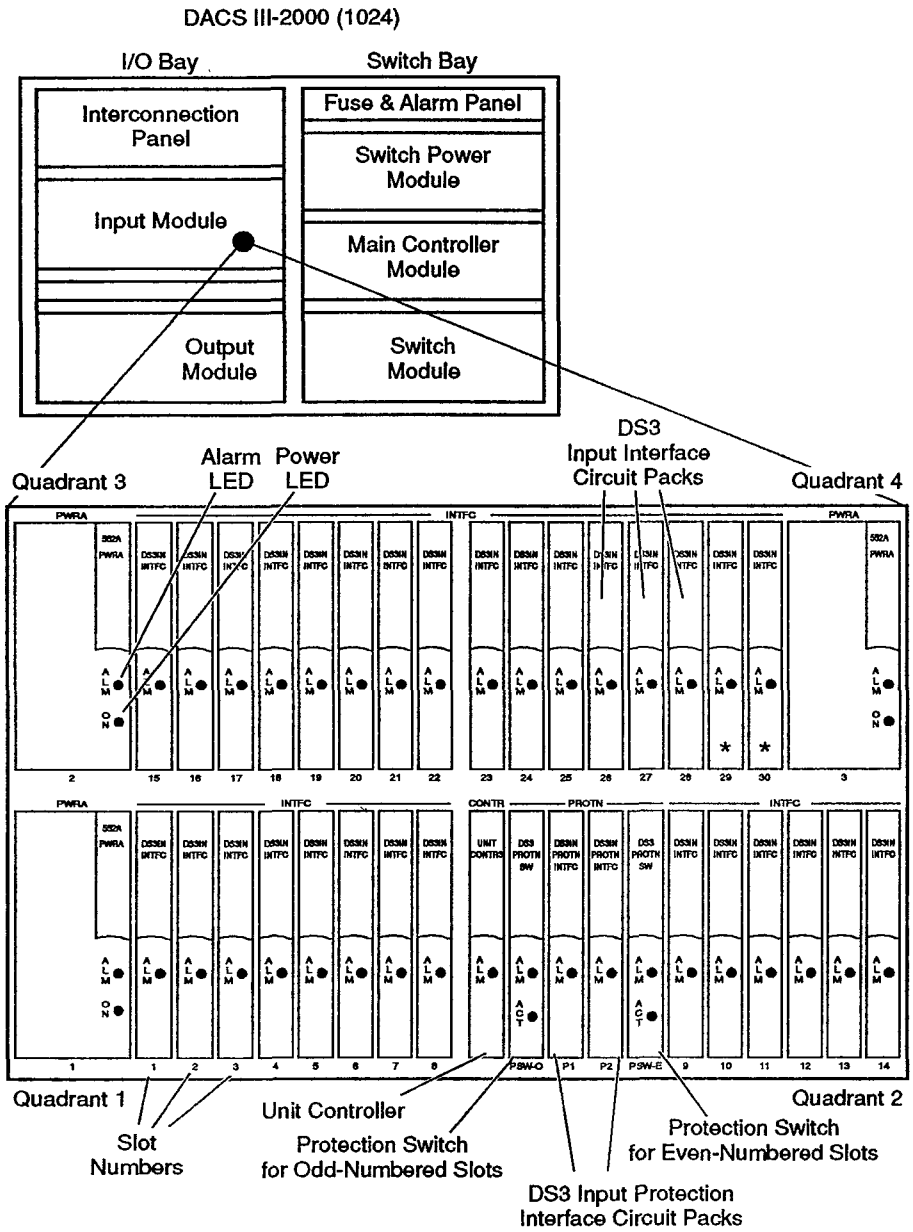

*If slots 29 and 30 of the corresponding DS3 output module contain AISDET circuit packs, then slots 29 and 30 of the DS3 input module will contain bus extender circuit packs.

Figure 4-1. DS3IN Interface Module with Single Power Feed

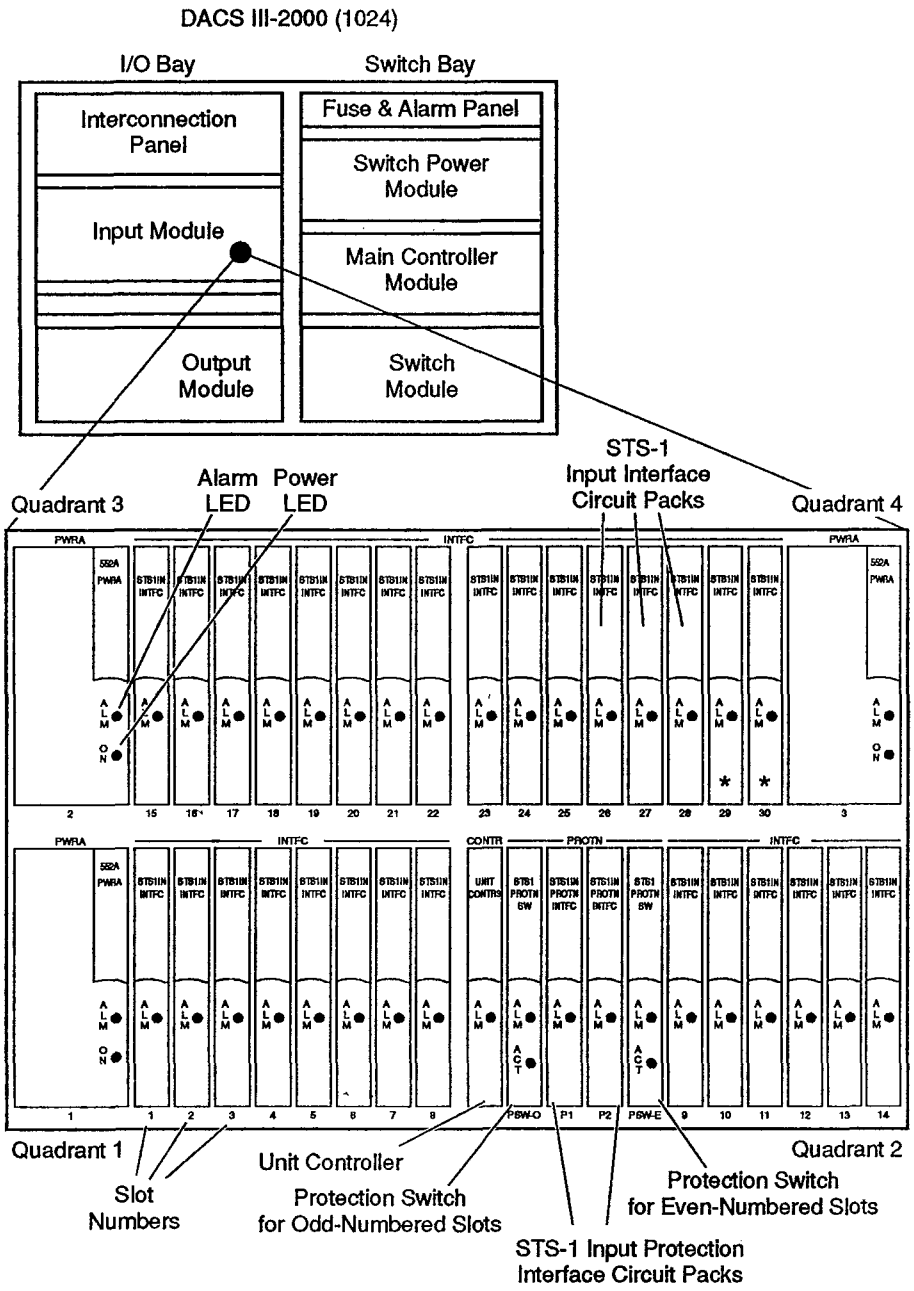

Figure 4-2. STS1IN Interface Module with Single Power Feed

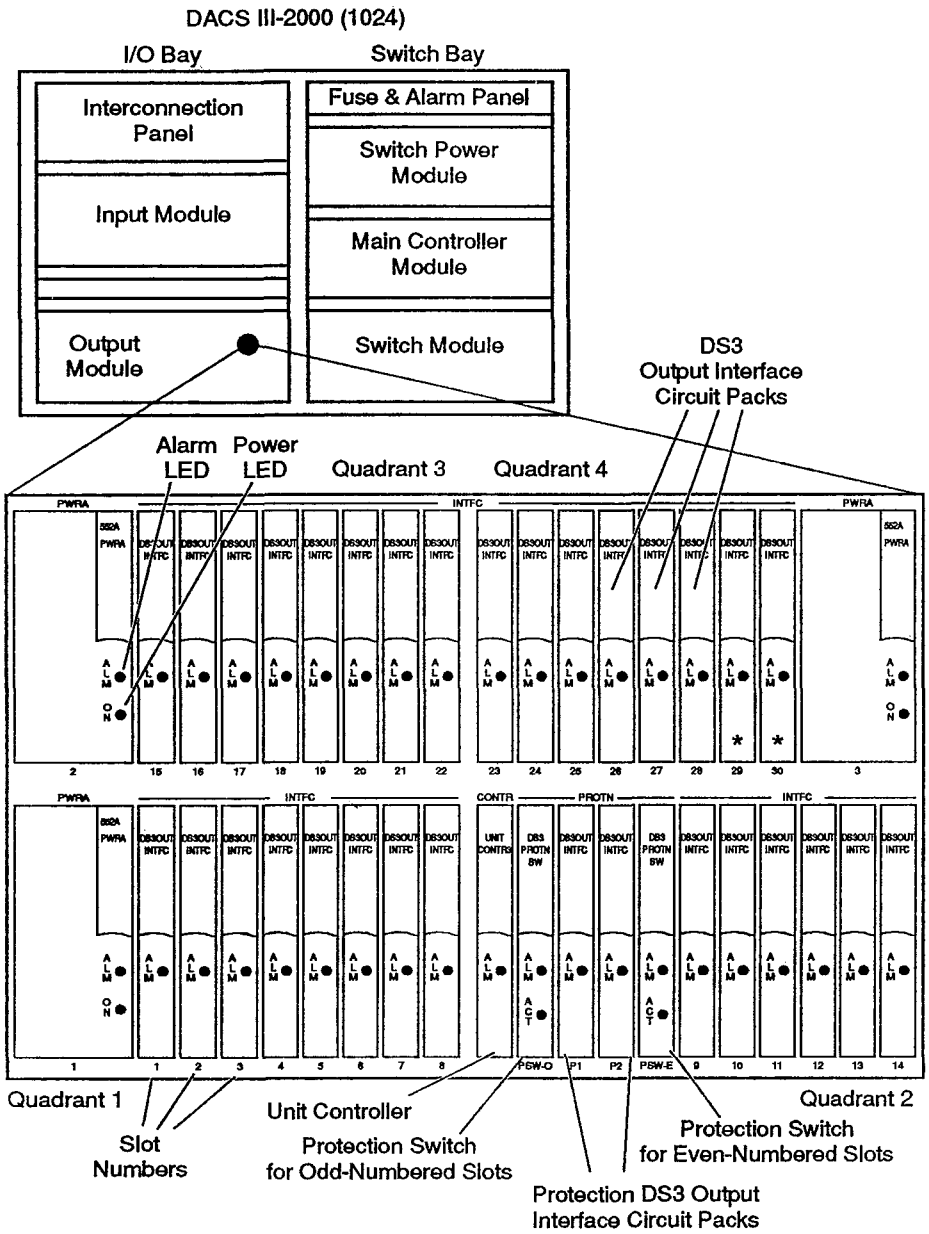

*If the unit is provisioned for the Alarm Indication Signal (AIS) detection feature, slots 29 and 30 will contain AISDET circuit packs. Also, slots 29 and 30 in the DS3 input module will contain bus extender circuit packs.

Figure 4-3. DS3OUT Interface Module with Single Power Feed

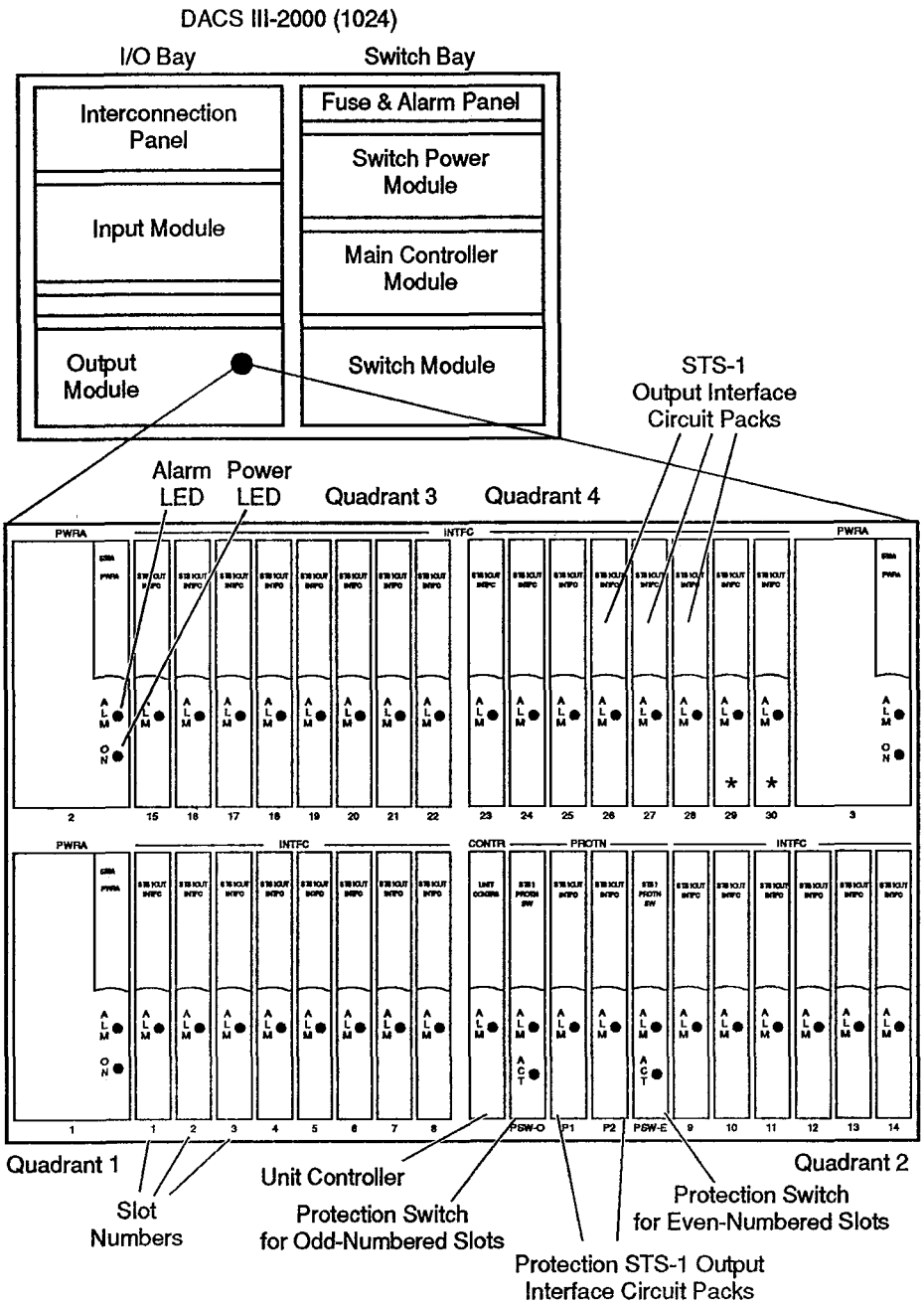

Figure 4-4. STS1OUT Interface Module with Single Power Feed

Check Switch Bay(s)

The third task of acceptance is to check the switch bays. If you have a DACS III-2000 1024-size system, there is only one switch bay to check. If you have a 2048-size system, there are two switch bays to check.

The procedure for checking switch bays follows.

Procedure 4-3. Checking Switch Bay(s)

1. Verify that there are no lighted fuse lamps.
2. Verify that power circuit packs have been installed in each switch power and main controller (MC) module and that all are functioning:
   - switch power module(s)
     - 1024-size system— the three PWRA circuit packs should have their green LEDs lighted.
     - 2048-size system— the four PWRA circuit packs, in each of the two switch modules, should have their green LEDs lighted. If your system is equipped with the dual power feed option, there are only three PWRA circuit packs.
   - main controller (MC) module
     - For both system sizes, the green LEDs on PWRB, PWRC, and PWRD should be lighted.
3. Verify that all main controller (MC) module circuit packs have been correctly installed.

   In the 1024-size system, there is only one switch communications interface (SCI) in the left SCI slot. The right SCI slot contains a blank circuit pack; see Figure 4-5 for locations.

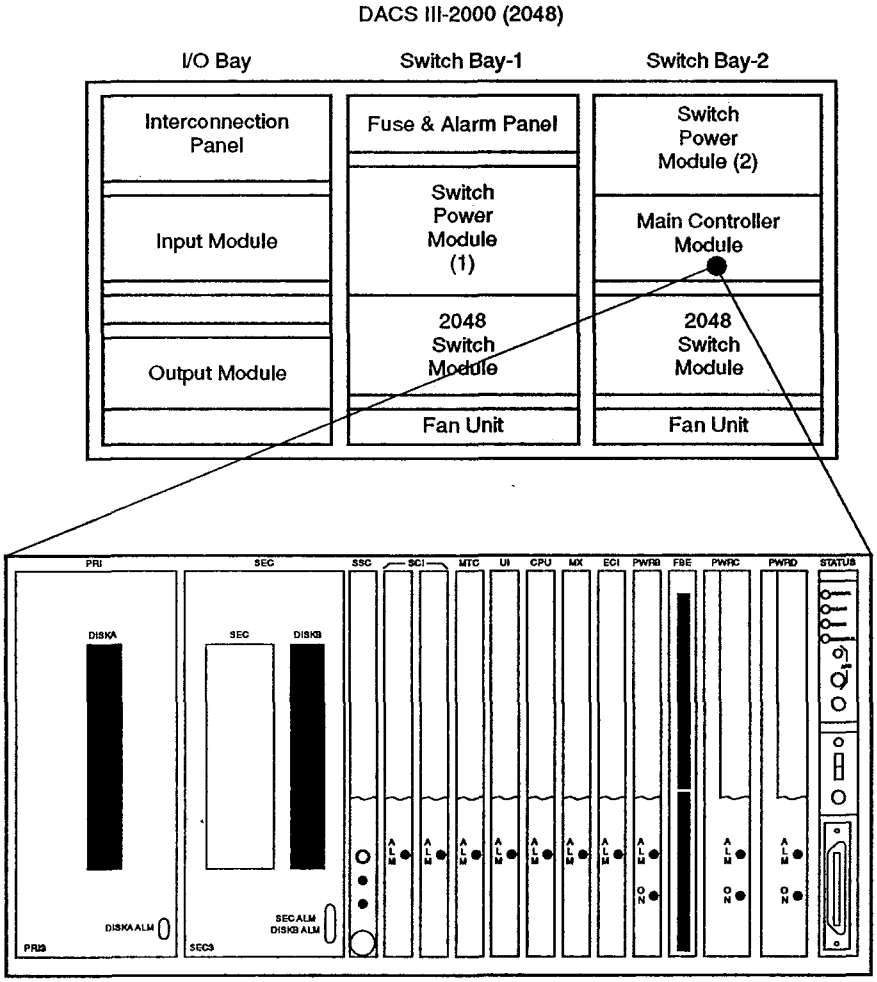

NOTE: DACS III-2000 (1024) contains an SCI, SCI2, or SCI3 in position 1 only. Position 2 contains a blank unit.

Figure 4-5. Main Controller Module—DACS III-2000 (2048)

4. Verify that each center stage switch circuit pack in the switch module has been correctly installed; all red LEDs should be dark (that is, not lighted).

   The1024-size system has 32 switch center (SW CTR) circuit packs; the 2048-size system has 64.

Initialize System and Load Software

The fourth task in acceptance is to initialize the system and load the release software from the optical cartridge (SEC) using the optical drive in the SEC3 circuit pack.

The procedure for initializing the system can be found in the "Implementation Procedures" chapter of *DACS III-2000, Release 4.0, Software Release Description* that comes with your software release optical cartridge. AT&T Network Services Division (NSD) should refer to their *Service Method of Procedure* for upgrade instructions.

Set System Date and Time

The fifth task of acceptance is to set the system date and time using the following procedure. If you set the date and time after rebooting the system, wait two minutes after the system has rebooted before using the ED-DATE command.

Procedure 4-4. Setting System Date and Time

1. Verify that the local TTY1 terminal is set for the following major characteristics. Some terminal models do *not* allow you to set every characteristic listed below; for those terminals, set only the needed characteristics:
   - full duplex
   - 8-bit ASCII, 7 data bits and 1 stop bit
   - even parity
   - flow control (DC1/DC3) set to ON
   - answerback is ^F (control-F) character.
2. Log on to the system; see Procedure 2-6, "Logging on Over a Snider Link," or Procedure 2-7, "Logging on Over an X.25 Link," depending on which link you are using.
3. Set date and time by entering:

   ED-DATE::::DATE,TIME;

   where

   DATE = the current date specified in YYMMDD format. YY is the last two digits of the year {00 through 99}, MM is the month {01 through 12}, and DD is the day of the month {01 through 31}. If this parameter is omitted, the current value is retained.

   TIME = the current time specified in HHMMSS format. HH is the hour {00 through 23}, MM is the minutes {00 through 59}, and SS is the seconds {00 through 59}. If this parameter is omitted, the current value is retained.
4. Verify that the ECI2 (or ECI5) red LED is no longer lighted and the minor (MN) alarm cleared.
   - If there is a time-of-day clock (TODC) alarm, see Procedure 9-21, "Clearing TODC Condition Type."
5. Verify that date and time are set correctly by entering:

   RTRV-HDR;

Check Unused Snider Links

The sixth task of acceptance is to check unused Snider links. TTY1 can be connected at the front of the frame on the status panel or on the back of the frame but should not be connected to both TTY1s at the same time. To remove a link be sure no one is logged on to the link and execute the remove command from a different link.

CAUTION:
Slowed system response.
Messages from the system queue up at the in-service unused links.
Remove unused Snider links from service.

Procedure 4-5. Checking Unused Snider Links

1. Check TTY connectors at the back of the frame; refer to Table 4-1. Note which TTY connectors have an attached terminal and which do not.

Table 4-1. Link Connector Locations

Link Connector	Connector Location on Frame
TTY1	Back or Front
TTY2	Back
TTY3	Back

2. Go to the terminal connected to Snider TTY1. Determine if any Snider links are in service by entering:

   `RTRV-PRMTR-LINK;`

   The system reports on all six links.

   - If the message shows Snider links 2 or 3 are in service, and neither link has a terminal connected to the TTY connector, remove that link by entering:

     `RMV-LINK::CLNK;`

     where

     `CLNK` = the CILINK to be removed, identified as CILINK-{1 through 6}

Remember, link 1 should be kept in service.

- If link 4 is not connected to a general telemetry processor (GTP), remove the link from service by entering:

  ```
  RMV-LINK::CILINK-4;
  ```

- If the message from checking each Snider link shows the link is not in service, the verification process is complete.

Provision I/O Bay(s)

The seventh task of acceptance is to provision the input/output (I/O) bays. I/O bays are numbered 1 through 4 on a 1024-size system (see Figure 4-6); 1 through 8 on a DACS III-2000 system (see Figure 4-7).

The procedure for provisioning I/O bays follows.

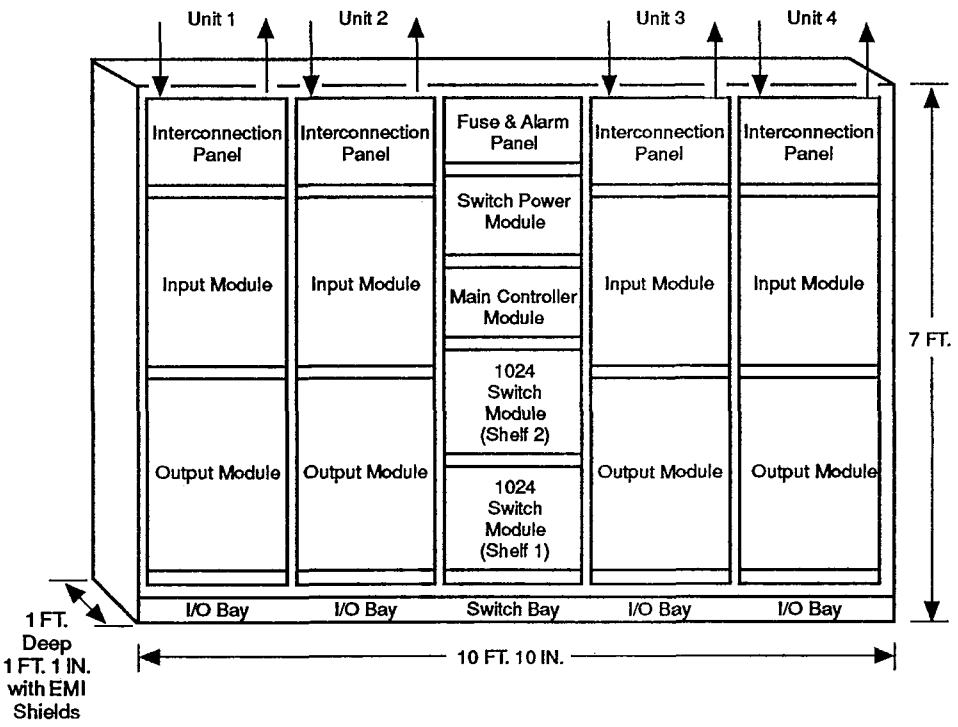

Figure 4-6. DACS III-2000 1024-size System—Unit Numbers

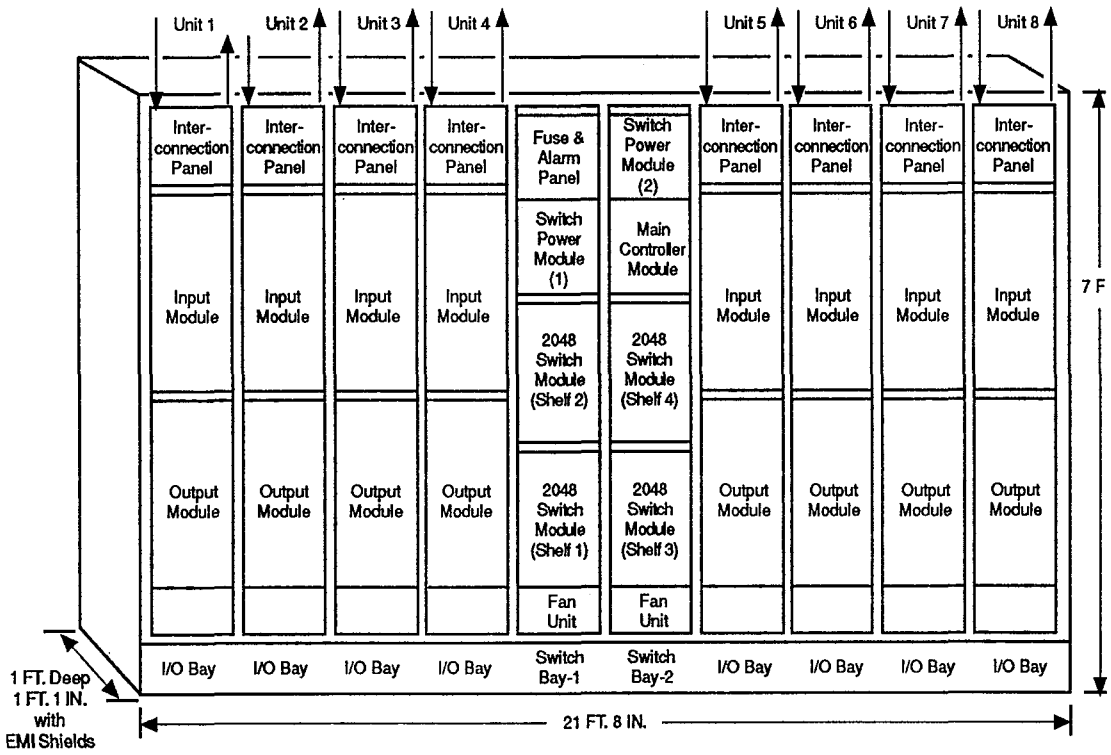

Figure 4-7. DACS III-2000 2048-size System—Unit Number

Procedure 4-6. Provisioning I/O Bay(s)

IMPORTANT: Provision one unit at a time.

1. Determine the unit number and the equipment type of the first unit that you want to provision. For unit numbering, see Figure 4-6 or 4-7 as appropriate for your system size.

2. Provision the unit by entering:

   ENT-EQPT::ELOC::ETYPE;

   where

   ELOC = the equipment location, identified as
   UNIT-{1 through 4} on a 1024-size system or
   UNIT-{1 through 8} on a 2048-size system

   ETYPE = the equipment type, either DS3 to provision the bay for DS3 signals, or STS1 to provision the bay for STS-1 signals. If omitted, the default type (DS3) is used.

   - If the command was successful, the system responds with the following message:

     ```
       <TID #n YY-MM-DD HH:MM:SS>
     M   ENT EQPT::<ELOC>::<ETYPE> COMPLD
     ;
     ```

   - If the unit is already provisioned, a second attempt at provisioning causes the system to respond with the `DENY` message.

3. Restore the unit controllers.

   - For the output interface module enter:

     RST-EQPT::ELOC;

     ELOC = the equipment location, identified as
     UC-{1 through 4}-OUT on a 1024-size system;
     UC-{1 through 8}-OUT on a 2048-size system

     The system responds with information about each circuit pack.

   - For the input interface module enter:

     RST-EQPT::ELOC;

     where

     ELOC = the equipment location, identified as
     UC-{1 through 4}-IN on a 1024-size system;
     UC-{1 through 8}-IN on a 2048-size system

     The system responds with information about each circuit pack.

4. Repeat Steps 1 through 3 for each unit you want to provision. Wait until each unit controller is restored before continuing to the next unit.

5. When all units have been provisioned, press the LED/LAMP TEST button on the status panel at the front of the main controller (MC) module. The LEDs should light in the order shown in Table 4-2. (The table lists the order for the maximum number of units a DACS III-2000 frame can hold. Your system may have fewer units.)

   If a major (MJ) alarm exists on a power unit in an I/O bay, the LED test for that interface module is not run.

   - If the LEDs did not light in the order outlined in Table 4-2, an input command in Step 2 or Step 3 was entered incorrectly or a unit was intentionally left unprovisioned. Repeat Steps 2 and 3 for each unit that should be provisioned and rerun the LED test described in Step 5.
   - If the LEDs did light in the proper order, the equipment is provisioned correctly.

Table 4-2. LED Test Sequence

Order	Equipment with Lighted LED
1	Main Controller and Switch Power Module(s)
2	DS3 Switch Module(s)
3	Unit 1* Output Interface Module Input Interface Module
4	Unit 2* Output Interface Module Input Interface Module
5	Unit 3* Output Interface Module Input Interface Module
6	Unit 4* Output Interface Module Input Interface Module
7	Unit 5* Output Interface Module Input Interface Module
8	Unit 6 Output Interface Module Input Interface Module
9	Unit 7* Output Interface Module Input Interface Module
10	Unit 8* Output Interface Module Input Interface Module

* Unit LEDs light only if provisioned.
The following LEDs do *not* light: ACO, disk access, and fan unit alarm LEDs.

6. To test the ACO green LED you must create an alarm on the frame by extracting an output or input interface pack that is not cross-connected and that is in the active idle (ACT-IDLE) state. Perform the following steps:

   a. Verify that there are no cross-connections the interface pack that you will remove. See Procedure 5-8, "Retrieving One-Way Cross-Connections," and Procedure 5-11, "Retrieving Two-way Cross-Connections," if you need detailed instructions.

   b. Verify that there are no 1x2 (bridge) broadcast or multiple port (conference) connections on the the interface pack that you will remove. See Procedure 5-16, "Retrieving 1x2 (Bridge) Broadcast Cross-Connections," and Procedure 5-21, "Retrieving Multiple Port (Conference) Leg(s)," if you need detailed instructions.

   c. Verify that the state of the interface pack that you will remove is ACT-IDLE, by entering:

      RTRV-STATE-EQPT::ELOC;

      where

      ELOC = the equipment location identified as UC-{1 through 4}-OUT on a 1024-size system or UC-{1 through 8}-OUT on a 2048-size system.

   d. Create an alarm on the frame by extracting the circuit pack that you verified in Step 6a. Wait until the alarm is declared (up to 20 seconds) and do one of the following:

      - Press the ACO button on the front of the status panel.
      - Enter:

        OPR-ACO-ALL:[TID]::[CTAG];

        where

        TID = the target identification (optional).

        ELOC = the equipment location, identified as UC-{1 through 4}-OUT on a 1024-size system or UC-{1 through 8}-OUT on a 2048-size system.

        CTAG = the correlation tag (optional).

      — If the green ACO LED lights, the equipment was provisioned correctly.

      — If the green ACO LED does not light, follow the troubleclearing procedures for the MC controller pack, Procedure 9-9, "Clearing INT Condition Type on Main Controller (MC) Module Circuit Packs."

      — If Procedure 9-9 does not rectify the problem, contact your system administrator or the next level of technical support.

   e. When the test is complete, reinsert the extracted circuit pack.

Test Frame Alarms

The eighth task of acceptance is to test the alarms on the frame using the procedure that follows.

Procedure 4-7. Testing Frame Alarms

CAUTION:
Service interruption.
Execution of this procedure on a frame carrying traffic causes service interruption. Perform this procedure only during acceptance testing.

1. Unseat any working input or output circuit pack by lifting the latch and pulling out the circuit pack no more than 1/2 inch.
2. Look for the minor alarm LED on the circuit pack.
   - If the minor alarm LED on the circuit pack does not light, note the problem and refer it to the installation group after completing this procedure.
   - If the minor alarm LED lights, indicating an alarm, and the system response shows the REPT ALM EQPT message, it is functioning properly.
3. Reseat the circuit pack and wait for the alarm LED to go dark (that is, to turn off).
4. Simulate a loss-of-signal by editing a port that currently has no signal connected to it using the appropriate command form for your signal type.
   — For *Message Set 1*

   `ED-PRMTR-{EC1|T3}::{EC1P|DS3P}::,DRVN;`

   — For *Message Set 2*

   `ED-{EC1|T3}::{EC1P|DS3P}::::ISTAT=DRVN;`

   where

   `EC1P|DS3P` = the port, identified as unit-slot-port. Allowable values for unit are 1 through 4 on a 1024-size system or 1 through 8 on a 2048-size system; slot, 1 through 30; port, 1 through 8.
5. Verify that you have a major alarm on the frame and that the red LED on the input pack used in Step 4 is flashing.

6. Clear the major alarm by entering the appropriate command form for your signal type.

   — For *Message Set 1:*

   ED-PRMTR-{EC1|T3}::{EC1P|DS3P}::,INIT;

   — For *Message Set 2:*

   ED-{EC1|T3}::{EC1P|DS3P}::::ISTAT=INIT;

   where

   EC1P|DS3P = the port, identified as unit-slot-port. Allowable values for unit are 1 through 4 on a 1024-size system, or 1 through 8 on a 2048-size system; slot, 1 through 30; port, 1 through 8.

   - If the alarm LED did not go out, note the problem and refer it, and any other alarm problems, to the installation group.
   - If the alarm LED did go out, the frame's alarm operation is functioning properly.

7. Test the critical alarm by performing the following steps:

   a. Retrieve the provisioning information associated with the DACS III-2000 network element by entering:

   RTRV-PRMTR-NE;

   The system responds with the following message:

```
   <TID #n YY-MM-DD HH:MM:SS>
M   RTRV PRMTR NE:::<CTAG> COMPLD
    /*NETYPE,NESIZE,SFTWR-VRSN,ALDY,N-SW,SW-INT,
         HLD-TIME:DBCHG: */
    /*PM-FEAT,PM-DATA-LINES,FAIL-TYPE,FAIL-THRES,
         MAN-PROTN ID,REARRANGE,PWR,ACDL,
          SDLY,SCDL */
    "<NETYPE,NESIZE,SFTWR-VRSN,ALDY,N-SW,SW-INT,
         HLD-TIME:DBCHG>"
    "<PM-FEAT,PM-DATA-LINES,FAIL-TYPE,FAIL-THRES,
        MAN-PROTN ID,REARANGE,PWR,ACDL,SDLY,SCDL>"
;
```

   b. Write down the value of the FAIL-TYPE and FAIL-THRES parameters.

   c. Check the value of the FAIL-TYPE and FAIL-THRES parameters.

      - If FAIL-TYPE shows either NONE, EQPT, both, *and/or* FAIL-THRES is greater than 1, continue this procedure at Step 7d.

- If FAIL-TYPE shows FAC and FAIL-THRES is equal to 1, continue this procedure at Step 7e.

d. Provision the critical alarm feature by entering:

```
ED-PRMTR-NE::::::,,::,:FAC,1;
```

The system responds with the following message:

```
   <TID #n YY-MM-DD HH:MM:SS>
M ED PRMTR NE:::<CTAG:NTID:ALDY:NOSW,SWIN,
     HT:DBCH:PMFE,PMDL:FTY,FTH:MPI:RE:PWR:ACDL:
     SDLY:SCDL>COMPLD
;
```

e. Simulate a service-affecting loss-of-signal by putting up a cross-connect to unused input and output ports, which currently have no signal connected to them, by entering the appropriate command form for your signal type:

— For *Message Set 1*:

```
CONN-DSX1-{STS1|T3}::FRPT,TOPT;
```

— For *Message Set 2*:

```
ENT-CRS-{STS1|T3}::FRPT,TOPT:::1WAY;
```

where

FRPT = the port in the input interface module, identified as unit-slot-port

TOPT = the port in the output interface module, identified as unit-slot-port

f. Edit the from port (FRPT) by entering the appropriate command form for your signal type:

— For *Message Set 1*:

```
ED-PRMTR-{EC1|T3}::{EC1P|DS3P}::,DRVN;
```

— For *Message Set 2*:

```
ED-{EC1|T3}::{EC1P|DS3P}::::ISTAT=DRVN;
```

where

EC1P|DS3P = the port on the input circuit pack in Step 7e.

g. Verify that you have a critical alarm on the frame and that the red LED of the input port used in Step 7f is flashing. There will also be a major alarm because of the loss of signal.

h. Clear the critical alarm by entering the appropriate command form for your signal type:

— For *Message Set 1*:

```
ED-PRMTR-{EC1|T3}::{EC1P|DS3P}::,INIT;
```

— For *Message Set 2*:

```
ED-{EC1|T3}::{EC1P|DS3P}::::ISTAT=INIT;
```

where

`EC1P|DS3P` = the port used in Step 7f

- If the red alarm LED did not go out, note the problem and refer it, and any other alarm problems, to the installation group.
- If the red alarm LED did go out, the frame's alarm operation is functioning properly.

i. Disconnect the cross-connect by entering the appropriate command form for your signal type:

— For *Message Set 1*:

```
DISC-DSX1-{STS1|T3}::FRPT,TOPT;
```

— For *Message Set 2*:

```
DLT-CRS-{STS1|T3}::FRPT,TOPT:::1WAY;
```

where

`FRPT` = the from port used in Step 7e

`TOPT` = the to port used in Step 7e

j. Return the system's alarms to the initial values, that is, the values in place before starting Step 7.

- If Step 7d was not executed, the test alarm procedure is complete.
- If Step 7d was executed, change the values by entering:

```
ED-PRMTR-NE::::::,,::,:FTY,FTH;
```

where

`FTY` = the value of the FAIL-TYPE parameter written down in Step 7b

`FTH` = the value of the FAIL-THRES parameter written down in Step 7b

Test Cable Between I/O Bays

The ninth task of acceptance is to test the cable that runs between the bays. The TEST-CABLE command takes approximately one minute to execute on each unit controller and approximately 20 minutes on all 16 unit controllers on a fully equipped 2048-size system. This command is abortable.

Table 4-3 shows the input circuit pack states that are required for testing.

Table 4-3. Input Circuit Pack States for TEST-CABLE

Circuit Pack (Abbreviation/CODE)	State
Input Unit Controller (UNIT CONTR3/ARW4)	IS
Input Protection Switch (DS3 PROTN SW/ARW3) (STS1 PROTN SW/ARW13)	IS
Input Interface pairs (DS3IN INTFC/ARW1B) (STS1IN INTFC/ARW11)	ACT-IDLE or OOS-MTCE

Table 4-4 shows the output circuit pack states that are required for testing.

Table 4-4. Output Circuit Pack States for TEST-CABLE

Circuit Pack (Abbreviation/CODE)	State
Input Unit Controller (UNIT CONTR3/ARW4)	IS
Output Unit Controller (UNIT CONTR3/ARW4)	IS
Input Protection Switch (DS3 PROTN SW/ARW3) (STS1 PROTN SW/ARW13)	IS
Output Interface pairs (DS3OUT INTFC/ARW2B) (STS1OUT INTFC/ARW12)	ACT-IDLE or OOS-MTCE
Corresponding Input Interface pairs (DS3IN INTFC/ARW1B) (STS1IN INTFC/ARW11)	Switched to protection if carrying traffic

Table 4-5 shows the protection circuit pack states that are required for testing.

Table 4-5. Protection Circuit Pack States for TEST-CABLE

Circuit Pack (Abbreviation/CODE)	State
Protection Packs (DS3IN PROTN INTFC/ARW6 and DS3OUT INTFC/ARW2B) (STS1IN PROTN INTFC/ARW16 and STS1OUT INTFC/ARW12)	STBY

You will check the TEST-CABLE output message after each test. The important fields to look at are ELOC, INTFC, and RESULTS as shown in the following example:

```
   <TID #n YY-MM-DD HH:MM:SS>
M   TEST CABLE::<ELOC:CTAG> COMPLD:
    /* INTFC,PIN #:DS3SW CTR,CABLE ID,PIN #:RESULTS */
    " <INTFC,PIN #:DS3SW CTR,CABLE ID,PIN #:RESULTS> "
;
```

where

ELOC = the location of the circuit pack slot being tested

INTFC = interface circuit pack

RESULTS = results of test: PASS, FAIL, NULL

The procedure for testing the cable follows.

Procedure 4-8. Testing Cable Between I/O Bays

1. Perform this procedure once for each of the I/O bays in your system. All steps must be completed regardless of the results from any individual step. Record all failures and report them to the installation group.
2. Select the first unit for testing. Remember the valid unit numbers for a 1024-size system are 1 through 4; for a 2048-size system, 1 through 8.
3. Perform a visual check of the cables looking for pin offset.
4. Test the cabling for input interface circuit pack slots 1 through 30 by entering the following command at the terminal

   TEST-CABLE::ELOC;

   where

   ELOC = the equipment location, identified as {STS1IN|DS3IN}-<unit number>-1&&-30. Allowable values for unit are 1 through 4 on a 1024-size system; 1 through 8 on a 2048-size system.

   For example, to test slots 1 through 30 in the input module of unit 2, you would enter the appropriate command form for your signal type:

   TEST-CABLE::{STS1|DS3IN}-2-1&&-30;

5. Check the RESULTS field of the output message.
   - If the result of any test is FAIL, note the number of the slot(s) for the input interface circuit pack(s) that failed. When an input interface circuit pack has a failure on one or more channels, the corresponding output interface circuit pack channels also fail. This is why the input interface circuit packs are tested first. Refer the problem to the installation group and continue this procedure at Step 6.
   - If the results are all PASS, the next cable can be tested.
6. Test the cabling for the protection input interface in slot P1 by entering:

   TEST-CABLE::ELOC;

   where

   ELOC = the equipment location, identified as {STS1IN|DS3IN}-<unit number>-P1. Allowable values for unit are 1 through 4 on a 1024-size system; 1 through 8 on a 2048-size system.

   - If the result of any test is FAIL, note the number of the slot for the protection input interface circuit pack that failed. Refer the problem to the installation group and continue this procedure at Step 7.
   - If the results are all PASS, the next cable can be tested.
7. Test the cabling for the protection input interface in slot P2 by entering:

   TEST-CABLE::ELOC;

   ELOC = the equipment location, identified as {STS1IN|DS3IN}-<unit number>-P2. Allowable values for unit are 1 through 4 on a 1024-size system; 1 through 8 on a 2048-size system.

   - If the result of any test is FAIL, note the number of the slot for the protection input interface circuit that failed. Refer the problem to the installation group and continue this procedure at Step 8.
   - If the results are all PASS, the next cable can be tested.

8. Test the cabling for the output interface circuit pack by entering:

   TEST CABLE::ELOC;

   ELOC = the equipment location, identified as {STS1OUT|DS3OUT}-<unit number>-1&&-30. Allowable values for unit are 1 through 4 on a 1024-size system; 1 through 8 on a 2048-size system.

   - If the result of any test is FAIL, note the number of the slot for the output interface circuit pack that failed. Refer the problem to the installation group and continue this procedure at Step 9.
   - If the results are all PASS, the next cable can be tested.

9. Test the cabling for the protection output interface in slot P1 by entering:

   TEST CABLE::ELOC;

   ELOC = the equipment location, identified as {STS1OUT|DS3OUT}-<unit number>-P1. Allowable values for unit are 1 through 4 on a 1024-size system; 1 through 8 on a 2048-size system.

   - If the result of any test is FAIL, note the number of the slot for the protection output interface circuit pack that failed. Refer the problem to the installation group and continue this procedure at Step 10.
   - If the results are all PASS, the next cable can be tested.

10. Test the cabling for the protection output interface in slot P2 by entering:

    TEST-CABLE::ELOC;

    ELOC = the equipment location, identified as {STS1OUT|DS3OUT}-<unit number>-P2. Allowable values for unit are 1 through 4 on a 1024-size system; 1 through 8 on a 2048-size system.

    - If the result of any test is FAIL, note the number of the slot for the protection output interface circuit pack that failed. Refer the problem to the installation group and continue this procedure at Step 11.
    - If the results are all PASS, the next cable can be tested.

11. Repeat Steps 2 through 10 for each of the remaining I/O bays that must be tested.

Verify External Cables

The tenth task of acceptance is to verify the external cables. The steps for the verification procedure can be found in Section 7, "Facility Cable Test Procedures," of the *DACS III-2000, Release 4.0, Installation Procedures Handbook.*

IPH 904 is used for a 1024-size system; IPH 906 is used for a 2048-size system.

Check Protection Switch Function

The eleventh task of acceptance is to check the protection switch function. Procedure 4-9 checks the protection switch function of the DACS III-2000 system by simulating a failure through the removal of one input and one output interface circuit pack. If the protection switch function is working, all operation switches to the spare or protection pack.

Procedure 4-9. Checking Protection Switch Function

1. Perform this procedure for each unit in the frame.
2. Choose an input/output port pair that is not hooked up to any external equipment.
3. At the interconnection panel, connect the transmitter of a transmission test set to the input port; connect the receiver to the output port.
4. Cross-connect the two ports in the pair by entering the appropriate command form for your signal type:
   - For *Message Set 1*

     `CONN-DSX1-{STS1|T3}::FRPT,TOPT;`
   - For *Message Set 2*

     `ENT-CRS-{STS1|T3}::FRPT,TOPT:::1WAY;`

     where

     `FRPT` = the port in the input interface module, identified as unit-slot-port

     `TOPT` = the port in the output interface module, identified as unit-slot-port

     Allowable values for unit are 1 through 4 on a 1024-size system or 1 through 8 on a 2048-size system; slot, 1 through 30; port, 1 through 8.
5. Verify transmission by using the test set.
6. Unseat the input interface circuit pack containing the cross-connected `FRPT` port. The system responds with report alarm and switch messages.

7. Verify that the green active LEDs on the protection switch circuit packs, associated with the input module, are lighted.
8. Verify a burst of errors followed by error-free transmission.
9. See if the unseated circuit pack actually switched to the spare circuit pack by entering:

   RTRV-STATE-EQPT::ELOC;

   where

   ELOC = the equipment location, identified as either {STS1IN|DS3IN}-unit-slot or {STS1OUT|DS3OUT}-unit-slot. Allowable values for unit are 1 through 4 on a 1024-size system or 1 through 8 on a 2048-size system; slot, 1 through 30.

   - If the green active LEDs on the PROTN SW circuit packs are lighted, all operations switched.
   - If the state for the entered input (or output) circuit pack is not out-of-service fault (OOS-FLT), then verify that the correct circuit pack was pulled.
10. Insert bit errors, using the test set transmitter.
11. Verify the errored transmission by observing bit errors on the receiver.

    If the transmission test does not pass, note the problem and refer it to the installation group.
12. Check the green active LEDs on the protection switch circuit packs.
13. Repeat Steps 5 through 11 for the output interface circuit pack containing the cross-connected TOPT port.
14. Prevent an alarm on the input port by entering the appropriate command form for your signal type:

    — For *Message Set 1*

    ED-PRMTR-{EC1|T3}::{EC1P|DS3P}::,NDRVN;

    — For *Message Set 2*

    ED-{EC1|T3}::{EC1P|DS3P}::::ISTAT=NDRVN;

    where

    EC1P|DS3P = the FROM port identified in Step 4
15. At the interconnection panel, disconnect the transmitter of the transmission test set from the input port; disconnect the receiver from the output port.

16. Disconnect the cross-connection on the input/output port pair by entering the appropriate command form for your signal type:
    - For *Message Set 1*

      `DISC-DSX1-{STS1|T3}::FRPT,TOPT;`
    - For *Message Set 2*

      `DLT-CRS-{STS1|T3}::FRPT,TOPT:::1WAY;`

      where

      `FRPT` = the port in the input interface module

      `TOPT` = the port in the output interface module
17. Restore the port to its initial value by entering the appropriate command form for your signal type:
    - For *Message Set 1*

      `ED-PRMTR-{EC1|T3}::{EC1P|DS3P}::,INIT;`
    - For *Message Set 2*

      `ED-{EC1|T3}::{EC1P|DS3P}::::ISTAT=INIT;`

      where

      `EC1P|DS3P` = the FROM port identified in Step 4
18. Repeat Steps 2 through 17 for each remaining unit in the frame.

Test Alarm and Telemetry Outputs

The twelfth task of acceptance is to test the alarm and telemetry outputs. These tests should be performed *only* if the DACS III-2000 system has been connected to the office alarm and telemetry systems. Make sure all DACS III-2000 system alarm conditions are clear. A major alarm condition preempts all minor alarm LED indications.

The procedure for running these tests follows.

Procedure 4-10. Testing Alarm and Telemetry Outputs

1. Before testing the telemetry alarms verify that CILINK-4 is in service by entering the following command:

   RTRV-PRMTR-LINK::CILINK-4;

2. Select an input/output port pair in any unit; cross-connect the two ports in the pair by entering the appropriate command form for your signal type:

   — For *Message Set 1:*

   CONN-DSX1-{STS1|T3}::FRPT,TOPT;

   — For *Message Set 2:*

   ENT-CRS-{STS1|T3}::FRPT,TOPT:::1WAY;

   where

   FRPT = the input port, identified as unit-slot-port

   TOPT = the output port, identified as unit-slot-port

   Allowable values for unit are 1 through 4 on a 1024-size system or 1 through 8 on a 2048-size system; slot, 1 through 30; port, 1 through 8.

   For example:

   — For *Message Set 1:*

   CONN-DSX1-STS1::4-10-1,4-10-1;

   — For *Message Set 2:*

   ENT-CRS-STS1::4-10-1,4-10-1:::1WAY;

3. Select another input/output port pair in a different circuit pack but in the same unit; cross-connect the two ports in the pair by entering the appropriate command form for your signal type:

   — For *Message Set 1*

   `CONN-DSX1-{STS1|T3}::FRPT,TOPT;`

   — For *Message Set 2*

   `ENT-CRS-{STS1|T3}::FRPT,TOPT:::1WAY;`

   where

   `FRPT` = the input port, identified as unit-slot-port

   `TOPT` = the output port, identified as unit-slot-port

   Allowable values for unit are1 through 4 on a 1024-size system or 1 through 8 on a 2048-size system; slot,1 through 30; port, g1 through 8.

   For example:

   — For *Message Set 1:*

   `CONN-DSX1-STS1::4-6-2,4-6-2;`

   — For *Message Set 2:*

   `ENT-CRS-STS1::4-6-2,4-6-2:::1WAY;`

   You should now have two separate cross-connections, using ports in two different input interface circuit packs.

4. Unseat the input interface circuit pack containing the port that was cross-connected in Step 3. The system should respond with a REPT ALM EQPT message.

5. Check the yellow minor LED on the status panel in the main controller (MC) module.

   - If it is not lighted, there is a failure with the main controller (MC) module; refer the problem to the installation group.
   - If it is lighted, check to hear if the minor office alarm is sounding.
     — If it is not sounding, there is a problem with the connection to the office alarm system or with the alarm itself. Refer the problem to the installation group.
     — If it is sounding, this part of the procedure tested successfully.

6. Press the alarm cutoff button on the main controller (MC) module status panel.

   - If the minor office alarm is not silenced, there is a failure in the main controller (MC) module. Refer the problem to the installation group.

- If the minor office alarm is silenced, the alarm cutoff button is working properly.

7. Contact the central telemetry monitoring office and have them verify that scan point 12 is set.
8. Check to see if the *Input Interface Fail NSA* telemetry scan point is activated.
   - If it is not activated, there is a problem with the connection to the telemetry system or with the telemetry system itself. Refer the problem to the installation group.
   - If it is activated, you are ready to proceed with the testing.
9. Unseat the input interface circuit pack containing the port that was cross-connected in Step 2. The system should respond with a REPT ALM EQPT message.
10. Check the red major LED on the status panel in the main controller (MC) module.
    - If it is not lighted, there is a failure in the main controller (MC) module. Refer the problem to the installation group.
    - If it is lighted, the main controller (MC) module is functioning properly.
11. Check to hear if the major office alarm is sounding.
    - If it is not sounding, there is a problem with the connection to the office alarm system or with the alarm itself. Refer the problem to the installation group.
    - If it is sounding, it is functioning properly.
12. Press the alarm cutoff button on the main controller (MC) module status panel.
13. Check to hear if the major office alarm is silenced.
    - If it is not silenced there is a failure in the main controller (MC) module. Refer the problem to the installation group.
    - If it is silenced, the alarm cutoff is working properly.
14. Check to see if scan point 11 is set.
    - If it is not activated, there is a problem with the connection to the telemetry system or with the telemetry system itself. Refer the problem to the installation group.
    - If it is activated, the telemetry system is working properly.
15. Reseat the two input interface circuit packs that were unseated in Steps 4 and 9. If you need detailed instructions, see Procedure 3-1, "Installing Circuit Packs."

16. Check the green LEDs on the protection switch circuit packs, after both circuit packs are reseated.

    - If one or both LEDs are still lighted, clear the protection switch(es). Enter the following command for each protection switch circuit pack whose LED did not go out:

      ALW-SW-EQPT::ELOC::WKG;

      where

      ELOC = the equipment location, identified as either {STS1IN|DS3IN}-{1 through 4}-{1 through 30} or {STS1OUT|DS3OUT}-{1 through 4}-{1 through 30} on a 1024-size system; {STS1IN|DS3IN}-{1 through 8}-{1 through 30} or {STS1OUT|DS3OUT}-{1 through 8}-{1 through 30} on a 2048-size system

    - If both LEDs are dark (that is, turned off), the protection switches are cleared.

17. Wait until the red major LED on the status panel in the main controller (MC) module is extinguished, or wait for one minute, whichever comes first.

    - If the LED is not extinguished within one minute, there is a failure in the main controller (MC) module. Refer the problem to the installation group.
    - If the LED extinguished within one minute, the main controller (MC) module is functioning properly.

18. Disconnect the cross-connections on the input/output port pairs by entering, for each cross-connection, the appropriate command form for your signal type:

    — For *Message Set 1*

    DISC-DSX1-{STS1|T3}::FRPT,TOPT;

    — For *Message Set 2*

    DLT-CRS-{STS1|T3}::FRPT,TOPT:::1WAY;

    where

    FRPT = the input port

    TOPT = the output port

For example:

— For *Message Set 1;*

```
DISC-DSX1-STS1::4-10-1,4-10-1;
DISC-DSX1-STS1::4-6-2,4-6-2;
```

— For *Message Set 2:*

```
DLT-CRS-STS1::4-10-1,4-10-1:::1WAY;
DLT-CRS-STS1::4-6-2,4-6-2:::1WAY;
```

Test Fan Units on 2048-size System

The thirteenth task for acceptance is testing the fan units in a DACS III-2000 2048-size system. A 1024-size system does not have fan units.

If your system has the high performance fan unit, (ED2C130-30,G3) use Procedure 4-11, "Testing High Performance Fan Units (ED9C130-30,G3)."

If your system has the standard fan unit (ED2C906-30,G1), use Procedure 4-12, "Testing Standard Fan Units (ED2C906-30,G1)."

Testing the High Performance ED9C130-30,G3 Fan Unit

Figure 4-8 shows the high performance fan unit. Refer to this figure when performing Procedure 4-11.

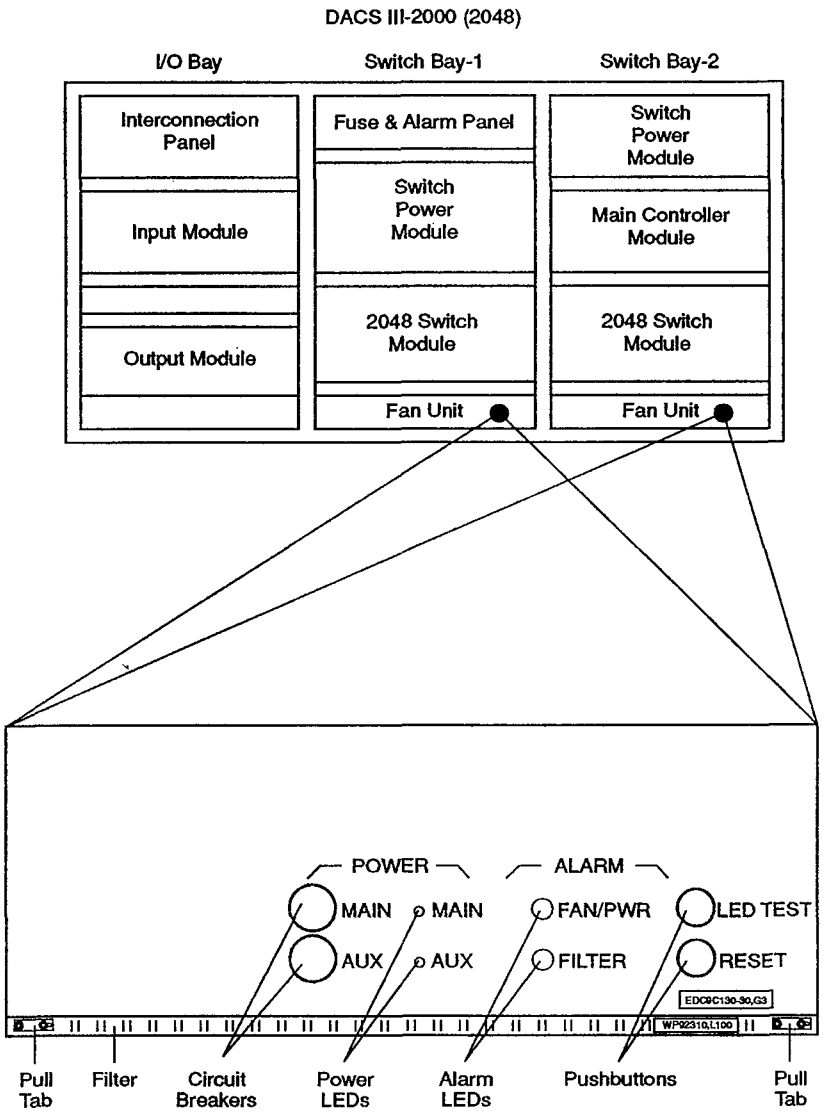

Figure 4-8. High Performance Fan Unit (ED9C130-30,G3)—DACS III-2000 (2048)

Procedure 4-11. Testing High Performance Fan Units (ED9C130-30,G3)

WARNING:
Moving fan blades.
Lack of protection guard could lead to injury from rotating fan blades.
Use caution when removing and inserting the air filters.

1. Make sure that a fan filter (WP92310,L100; COMCODE 406747972) is present and installed properly.
   - If the fan filter is missing, report it to the installation group.
   - If the fan filter is present, continue this procedure at Step 2.
2. Be sure that the air inlet below the fan unit is unobstructed; see Figure 4-8.
3. Push the RESET button to reset the fan unit.
4. Perform the LED test by pressing the LED/LAMP TEST button and holding it down. The LEDs on the fan unit flash every two seconds while the LED TEST button is pressed.
   - If the LED test fails, report the failure to the installation group.
   - If the LED test passes, continue this procedure at Step 5.
5. Verify that the fan unit is operational.
   a. Listen for fan movement.
   b. Look to see if the green MAIN and AUX power LEDs are lighted.
   c. Look to see if the red FAN/PWR and FILTER alarm LEDs are off.
6. Remove the fan filter.

   The fan shuts down, the FAN/PWR and FILTER alarm LEDs light, and the system outputs one of the following messages:

   — For *Message Set 1*:

```
  <TID #n YY-MM-DD HH:MM:SS>
* <ASEQ> REPT ALM EQPT
   /* LOC:NTFCNCDE,CONDTYPE,SRVEFF:TROUBLE */
   " FAN-<x>: MJ,INT,NSA:ISO "
;
```

   — For *Message Set 2*:

```
   <TID YY-MM-DD HH:MM:SS>
*  <ASEQ> REPT ALM EQPT
    " FAN-<x>: MJ,INT,NSA,,,,::,ISO "
;
```

where

x = the fan unit number; 1 or 2

7. Reinsert the fan filter and push the RESET button. The FAN/PWR and filter alarm LED will turn off.

   After approximately 20 seconds, the red MAJOR alarm LED on the status panel goes out and the system outputs one of the following alarm cleared messages:

   — For *Message Set 1*:

```
  <TID #n YY-MM-DD HH:MM:sSS>
* <ASEQ> REPT ALM EQPT
   /* LOC:NTFCNCDE,CONDTYPE,SRVEFF:TROUBLE */
   " FAN-<x>: CL,INT,NSA:ISO "
;
```

   — For *Message Set 2*:

```
  <TID YY-MM-DD HH:MM:SS>
* <ASEQ> REPT ALM EQPT
   /* LOC:NTFCNCDE,CONDTYPE,SRVEFF:TROUBLE */
   " FAN-<x>: CL,INT,NSA,,,,::,ISO "
;
```

   where

   x = the fan unit number; 1 or 2

   - If any of the actions outlined in Steps 6 and 7 did not occur, refer the failure to the installation group.
   - If all actions occur as described, the alarm failure test completed successfully. Continue this procedure at Step 8.

8. Remove E6 (or E7) fuses from the fuse block by turning the fuse holder in the counterclockwise direction. This removal simulates main power failure.

9. Check for the following four changes to occur.
   - The green LED associated with the MAIN POWER of the fuse you pull goes out.
   - The red FAN/PWR alarm LED on the fan unit lights.
   - The red MAJOR alarm LED on the status panel of the main controller module lights.
   - The system outputs one of the following messages:
     — For *Message Set 1*:

```
  <TID #n YY-MM-DD HH:MM:SS>
*  <ASEQ> REPT ALM EQPT
    /* LOC:NTFCNCDE,CONDTYPE,SRVEFF:TROUBLE */
    " FAN-<x>: MJ,INT,NSA:ISO "
;
```

     — For *Message Set 2*:

```
  <TID YY-MM-DD HH:MM:SS>
* <ASEQ> REPT ALM EQPT
   " FAN-<x>: MJ,INT,NSA,,,,::,ISO "
;
```

   where

   x = the fan unit number; 1 or 2

10. Reinsert the fuse and push the RESET button to clear the alarms. The green LED will be lighted and the FAN/PWR LED turned off.

    After approximately 20 seconds, the red MAJOR alarm LED on the status panel goes out

    The system outputs one of the following alarm cleared messages:

    — For *Message Set 1*:

```
  <TID #n  YY-MM-DD  HH:MM:SS>
*  <ASEQ> REPT ALM EQPT
   /*  LOC:NTFCNCDE,CONDTYPE,SRVEFF:TROUBLE */
   " FAN-<x>:   CL,INT,NSA:ISO"
;
```

    — For *Message Set 2*:

```
  <TID YY-MM-DD HH:MM:SS>
*  <ASEQ> REPT ALM EQPT
   " FAN-<x>: CL,INT,NSA,,,,::,ISO "
;
```

    where

    x = the fan unit number; 1 or 2

- If any of the actions outlined in Steps 9 and 10 did not occur, refer the failure to the installation group.
- If all actions occur as described, the auxiliary power test passed.

11. Repeat the entire procedure for the second fan unit.

Testing the Standard ED2C906-30,G1 Fan Unit

Figure 4-9 shows the standard fan unit. Refer to this figure when executing Procedure 4-12.

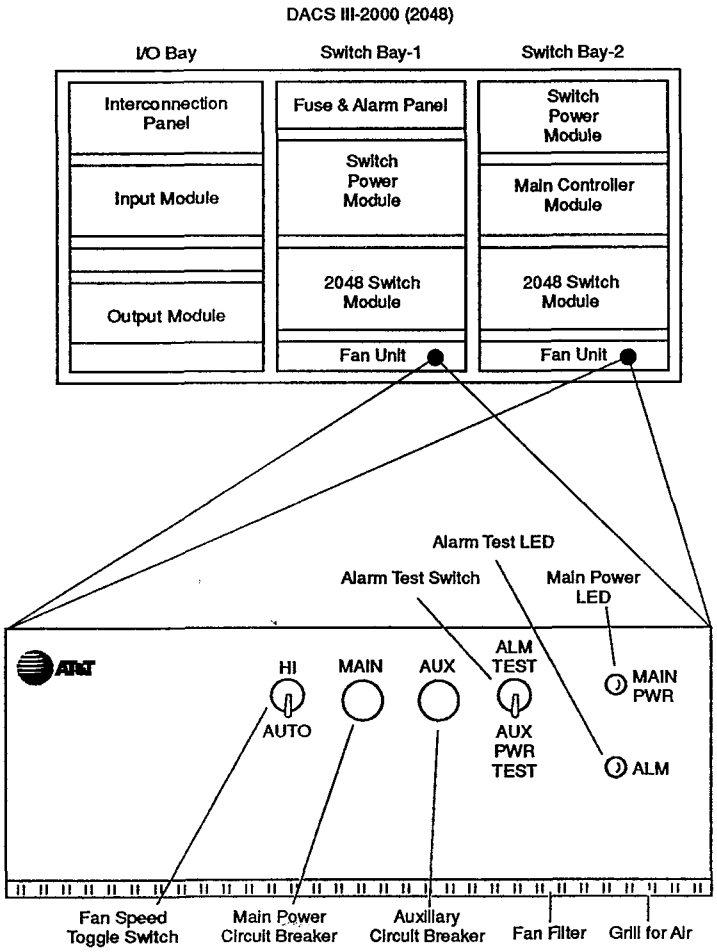

Figure 4-9. Standard Fan Unit (ED2C906-30,G1)—DACS III-2000 (2048)

Procedure 4-12. Testing Standard Fan Units (ED2C906-30,G1)

WARNING:
Moving fan blades.
Lack of protection guard could lead to injury from rotating fan blades.
Use caution when removing and inserting the air filters.

1. Make sure that a fan filter (WP91473,L100; COMCODE 405470808) is present and installed properly.
   - If the fan filter is missing, report it to the installation group.
   - If the fan filter is present, continue this procedure at Step 2.
2. Ensure that the air inlet below the fan assembly is unobstructed; see Figure 4-9 for air inlet location.
3. Verify that the fan unit is operational.
   a. Place the fan speed selection toggle switch in the AUTO position.

      When the switch is in the AUTO position, the fans operate at a reduced speed if the air temperature is 90° F or below.

   b. Place the fan speed selection toggle switch in the HI position.

      When the switch is in the HI position, the fans operate at maximum speed continuously.

   c. Return the fan speed selection toggle switch to the AUTO position.
4. Lift the alarm test switch to the ALM TEST position to perform the fan failure test; see Figure 4-9 for test switch location. Hold the switch for approximately 10 seconds; this simulates the failure of one fan in the unit.
5. Check for the following five changes to occur:
   - The red ALM LED on the fan unit lights.
   - The remaining fans in the unit operate at HIGH speed.
   - The red MAJOR alarm LED on the status panel of the main controller module lights.
   - The system outputs one of the following messages:
     — For *Message Set 1*:

```
  <TID #n YY-MM-DD HH:MM:SS>
*  <ASEQ> REPT ALM EQPT
   /* LOC:NTFCNCDE,CONDTYPE,SRVEFF:TROUBLE */
   " FAN-<x>: MJ,INT,NSA:ISO "
;
```

— For *Message Set 2*:

```
  <TID YY-MM-DD HH:MM:SS>
* <ASEQ> REPT ALM EQPT
   " FAN-<x>: MJ,INT,NSA,,,,::,ISO "
;
```

where

x = the fan unit number; 1 or 2

- After approximately 20 seconds, the red MAJOR alarm LED on the status panel goes out.

  The system outputs one of the following alarm cleared messages:

  — For *Message Set 1*:

```
   <TID #n YY-MM-DD HH:MM:SS>
*  <ASEQ> REPT ALM EQPT
    /* LOC:NTFCNCDE,CONDTYPE,SRVEFF:TROUBLE */
    " FAN-<x>: CL,INT,NSA:ISO "
;
```

  — For *Message Set 2*:

```
   <TID YY-MM-DD HH:MM:SS>
*  <ASEQ> REPT ALM EQPT
    /* LOC:NTFCNCDE,CONDTYPE,SRVEFF:TROUBLE */
    " FAN-<x>: CL,INT,NSA,,,,::,ISO "
;
```

  where

  x = the fan unit number; 1 or 2

- If any of the actions outlined in Step 5 did not occur, refer the failure to the installation group.
- If all actions occur as described, the alarm failure test completed successfully.

6. Lower the alarm test switch to the AUX PWR TEST position to perform the auxiliary power test. Hold the switch for approximately 10 seconds; this simulates the failure of one of the main power supplies feeding the fan unit.

7. Check for the following five changes to occur.
   - The red ALM LED on the fan unit lights.
   - The remaining fans operate at HIGH speed.
   - The red MAJOR alarm LED on the status panel of the main controller module lights.
   - The system outputs one of the following messages:

     — For *Message Set 1*:

```
  <TID  #n  YY-MM-DD  HH:MM:SS>
*  <ASEQ> REPT ALM EQPT
   /* LOC:NTFCNCDE,CONDTYPE,SRVEFF:TROUBLE */
   " FAN-<x>: MJ,INT,NSA,,,,::,ISO "
;
```

     — For *Message Set 2*:

```
  <TID YY-MM-DD HH:MM:SS>
*  <ASEQ> REPT ALM EQPT
   " FAN-<x>: MJ,INT,NSA,,,,::,ISO "
;
```

     where

     x = the fan unit number; 1 or 2

   - After approximately 20 seconds, the red MAJOR alarm LED on the status panel goes out.

     The system outputs one of the following alarm cleared messages:

     — For *Message Set 1*:

```
  <TID #n YY-MM-DD HH:MM:SS>
*  <ASEQ> REPT ALM EQPT
   /* LOC:NTFCNCDE,CONDTYPE,SRVEFF:TROUBLE */
   " FAN-<x>: CL,INT,NSA:ISO "
;
```

     — For *Message Set 2*:

```
  <TID YY-MM-DD HH:MM:SS>
*  <ASEQ> REPT ALM EQPT
   " FAN-<x>: CL,INT,NSA,,,,::,ISO "
;
```

     where

     x = the fan unit number; 1 or 2

- If any of the actions outline in Step 7 did not occur, refer the failure to the installation group.
- If all actions occur as described, the auxiliary power test passed.

8. Repeat the entire procedure for the second fan unit.

Provisioning

5

Contents

Provisionable Features and Their Defaults 5-2

Alarm Indication Signal Detection (AISDET) Provisioning 5-4

Alternate Maps 5-6

- Alternate Map Creation 5-9
- Alternate Map File Changes 5-11
- Alternate Map Deletion 5-13
- Alternate Map Retrieval 5-14
- Alternate Map Execution 5-15

Circuit Connection Provisioning 5-16

- One-Way Cross-Connections 5-17
- Two-way Cross-Connections 5-20
- Rollover Connections 5-23
- 1x2 (Bridge) Broadcast Cross-Connections 5-25
- Multiple Port (Conference) Broadcast Cross-Connections 5-27
- Loopbacks 5-33

Command Verification Provisioning 5-34

- Using Command Verification 5-36

Critical Alarm Provisioning 5-37

Database Capture Buffer Provisioning 5-38

Performance Monitoring Preparations 5-39

- Performance Monitoring Provisioning 5-39
- Performance Monitoring Thresholds 5-41
- Bipolar Violation Error Rate Thresholds 5-44

Contents

Performance Monitoring Use 5-45

- Schedule and Report Counts 5-45
- Inhibit Reports for Specific Ports 5-48
- Allow Reports for Specific Ports 5-49
- Cancel Reports for Specific Ports 5-50
- Cancel Reports Using ID Numbers 5-51

Equipment Provisioning 5-53

- Manual Provisioning 5-53

Facility Provisioning 5-55

Fault Isolation Provisioning 5-56

I/O Bay Provisioning 5-57

I/O Bay Deprovisioning 5-62

Manual Protection Indicator Provisioning 5-65

Media Validation 5-66

Message Set Provisioning 5-68

Test Access Auto-Release Provisioning 5-70

Provisioning

5

Provisioning involves preparing the different parts of the DACS III-2000 system to work. An entity that has been provisioned is ready to perform its intended function. The parts of the system that need to be provisioned include:

- alarm indication signal detection (AISDET)
- alternate maps
- circuit connections
- command verification
- critical alarms
- database capture buffer
- DS3 line performance monitoring
- STS-1 section performance monitoring
- equipment
- facilities
- fault isolation
- I/O bays
- manual protection indicator
- media validation
- message sets
- test access auto-release

Provisioning procedures for each of the parts are provided in this chapter.

Provisionable Features and Their Defaults

Table 5-1 lists the DACS III-2000 provisionable features together with their default setting and setting options for Release 4.0. The "Commands" column lists the commands for retrieving and editing the settings. The (1) and (2) marks show that the command belongs to *Message Set 1* or *Message Set 2*. No marking indicates the command belongs to both message sets.

Table 5-1. Provisionable Features—Default Settings and Setting Options

Feature Name	Default Setting	Setting Options	Commands (Message Set)
Alarm Indication Signal Detection (AISDET)	NR	MJ,MN,NA,NR	ED-ATTR-T3 RTRV-ATTR-T3
Command Verification	OFF	OFF if user-type is MACHINE; ON if user-type is HUMAN	CHG-LGN (1) CRTE-LGN (1) RTRV-PRVG-USER (1) ED-SECU-USER (2) ENT-SECU-USER (2) RTRV-SECU-USER (2)
Critical Alarms	—Failure-type is NONE —threshold is 1	—Failure-type: BOTH, EQPT, FAC, NONE —threshold: 1through 64	ED-PRMTR-NE RTRV-PRMTR-NE
Database Change Capture Buffer	Message/history-file is OFF	OFF, ON	ED-PRMTR-NE RTRV-PRMTR-NE
Performance Monitoring	—Monitoring is OFF —Reporting data lines is 1800	—Monitoring: ON,OFF —Data Lines: 1 through 3600	ED-PRMTR-NE RTRV-PRMTR-NE
Fault Isolation	OFF	OFF,ON	SET-SYSOPR-COM RTRV-SYSOPR-COM
LED Indication for Manual Protection	CKTLED-OFF	CKTLED-OFF, CKTLED-ON	ED-PRMTR-NE RTRV-PRMTR-NE

Feature Name	Default Setting	Setting Options	Commands (Message Set)
Main Controller (MC) Module Security (link)	—Inactivity time is 15 minutes —Number of invalid session setup attempts is 5 —Interval access time is 30 seconds —Link lockout time is 10 minutes	—Inactivity time: 0 through 60 minutes —Number of invalid session setup attempts: 1 through 10 —Interval access time: 0 through 90 seconds —Link lockout time: 1 through 30 minutes	ED-SECU-LINK RTRV-SECU-LINK
Media Validation	ON	ON,OFF	CPY-MEM ENT-SYSID RTRV-SYSID
Multiple Message Sets	Message set is the same as system administrator's (or the next level of technical support's) setting	1,2	CHG-LGN (1) CRTE-LGN (1) RTRV-PRVG-USER (1) ED-SECU-USER (2) ENT-SECU-USER (2) RTRV-SECU-USER (2)
Rearrangement for Multiple Port Broadcast	—Port-level rearrange is NO —System-level rearrange is NO	—Port-level rearrange: NO, YES —System-level rearrange: NO, YES	ENT-CONF-{STS1|T3} ED-PRMTR-NE RTRV-PRMTR-NE
Scheduled autonomous disk to optical cartridge backups	Interval is 0-DAY (OFF)	{0 through 7}-DAY	SCHED-BKUP-MEM RTRV-BKUPSCHED-MEM
Security Audits	ON	Not provisionable	DLT-SECU-AUD RTRV-SECU-AUD
Test Access Auto-release	NO	NO,YES	CHG-TACC-{STS1|T3} CONN-TACC-{STS1|T3} RTRV-TACC-{STS1|T3}
Time-of-Day Clock (TODC)	ON	Not provisionable	ED-DATE

Alarm Indication Signal Detection (AISDET) Provisioning

The AIS detection feature helps detect and isolate DS3 facility failures by sequentially scanning incoming DS3 signals and reporting those that have a framed or unframed DS3 alarm indication signal, loss of frame (LOF), or IDLE condition.

Alarm indication signal detection circuit packs (ARW8s) must reside in slots 29 and 30 of the DS3OUT interface module in the unit(s) being provisioned. For detailed instructions on exchanging DS3OUT interface circuit packs with AISDET circuit packs, see Procedure 6-5, "Replacing DS3OUT Interface Circuit Packs with AISDET Circuit Packs."

NOTE:
A unit must be equipped and provisioned as a DS3 unit to use the AIS detection feature. AIS is not currently supported for STS-1 facilities.

The procedure to provision the AIS detection feature follows.

Procedure 5-1. Provisioning Alarm Indication Signal Detection (AISDET)

1. Check what kind of circuit packs reside in slots 29 and 30.
   - If slots 29 and 30 contain AISDET circuit packs, continue this procedure at Step 2.
   - If slots 29 and 30 contain DS3OUT interface circuit packs, the circuit packs *must* be swapped out for AISDET circuit packs.

     Execute Procedure 6-5, "Replacing DS3OUT Interface Circuit Packs with AISDET Circuit Packs" before continuing with this procedure at Step 2.
2. Use the `ED-ATTR-T3` command to provision the alarm indication signal detection feature.

   `ED-ATTR-T3:[TID]:DS3P:[CTAG]:NOCD,AIS;`

   where

   `TID` = the target identification (optional)

   `DS3P` = the DS3 port to be provisioned for AIS detection.

   `CTAG` = the correlation tag (optional)

NOCD = the notification code to be used on the DS3 INTFC port for the condition group AIS. To receive AISDET notification, the value must be either **MJ** (major alarm), **MN** (minor alarm), or **NA** (no alarm, status only).

3. Check the message.
   - If the system responds with the COMPLD message, the alarm indication signal detection feature has been provisioned successfully.
   - If the system responds with the DENY message, check the error code in Appendix C for an explanation.

Alternate Maps

An alternate map is a file consisting of a series of DS3 cross-connect or disconnect commands known as component commands. SONET cross-connect and disconect commands are not supported.

NOTE:
The alternate maps feature does not support STS-1 facilities.

You enter these component commands into a map file during an editing session, using special editing session commands to list the component commands, delete component commands, and exit back to the normal system operating mode. *Message Set 1* component commands are used by both *Message Set 1* and *Message Set 2* users.

The alternate map validation function checks an alternate map when it is saved at the end of an editing session. The validation verifies that an individual DS3 input or output port is not used more than once when creating DS3 cross-connections within a particular alternate map, and that no EC1 ports have been used in the DS3 commands. If the validation fails, it marks a map "non-executable" and the message lists the DS3 cross-connections that are in conflict so that you can edit and correct the alternate map. If the problem is one of referencing EC1 ports, you will not have any conflicts, but the map is not executable. If no conflicts are found, it then assigns "execute" permission to the alternate map file, meaning that the alternate map is ready to reconfigure your system quickly when needed.

A DACS III-2000 system can maintain up to1,000 alternate maps that average 50 commands each. If each map has fewer commands, the system can store more maps, to an aboslute maximum of 2,000 maps. During an editing session that is initiated with either the ENTER-MAP or ED-PRMTR-MAP command, the SZE-CMD can show you the current number of commands in the map and the maximum number of commands that can be created during the editing session.

Alternate map capabilities include:

- appropriate component commands for alternate maps to disconnect unwanted DS3 one-way and two-way cross-connects and unwanted DS3 test access ports
- displays newly created maps at the top of a list showing retrieved map information
- clears all alternate maps from the system with one command
- provides dynamic storage of up to 2,000 maps. The total number of maps stored is dependent on the size of the maps.
  - The RTRV-PRMTR-MAP command displays the bytes remaining in the alternate map storage space in *Message Set 1* only.

— The new editing session command, SZE-CMD, gives the maximum size of the alternate map and the maximum number of component commands that can be entered into the map.

If you want to start an alternate map editing session after you have done an INIT-SYS::MC::BOOT, wait for two minutes before starting your session so that the system can complete internal boot processes.

Map files created or modified prior to release 4.0 will not be converted to release 4.0. You must manually re-enter changes to the alternate map files.

Table 5-2 lists the commands that are used with alternate maps.

Table 5-2. Commands Used with Alternate Maps

Valid Within a Map	
Command	**Used For**
CONN-BDCST-T3	Adding a 1x2 broadcast connection command
CONN-DSX-T3	Adding a two-way cross-connect command
CONN-DSX1-T3	Adding a one-way cross-connect command
CONN-ROLL-T3	Adding a rollover cross-connect command
DISC-DSX-T3	Adding a two-way disconnect command
DISC-DSX1-T3	Adding a one-way disconnect command
DISC-TACC-T3	Adding a test access disconnect command
When Editing Maps	
Command	**Used For**
ABT-ED	Aborting an editing session
DLT-CMD	Deleting component commands
ED-PRMTR-MAP	Maintaining alternate maps
END-ED	Ending an editing session; saving the file
ENT-MAP	Creating alternate maps
LST-CMD	Listing component commands
SZE-CMD	Retrieving the number of commands in an alternate map
When Administering Maps	
Command	**Used For**
ABT-CMD	Aborting output from command retrieval
CPY-MAP	Copying an alternate map
CPY-MEM	Backing up/restoring alternate maps
DLT-MAP	Deleting an alternate map
EXC-MAP	Executing an alternate map
RTRV-MAP-CMD	Retrieving alternate map information
RTRV-PRMTR-MAP	Listing alternate map information

Alternate Map Creation

Alternate map files can be created, changed or deleted; the procedure for creating a map follows.

Procedure 5-2. Creating Alternate Map Files

1. Obtain alternate map information from the Central Office or from a work order.
2. Begin the editing session by entering:

   ENT-MAP::NME;

   where

   NME = the 1 to 7 alphanumeric character name for the map being created

   - If the command did not execute properly, check the error code in Appendix C and retry the command, if applicable. Otherwise, call your system administrator or the next level of technical support for assistance.
   - If the command executed properly, that is you received the COMPLD message and you are on a Snider link (1, 2, or 3), check that you have the << prompt. If you do not have the prompt, call your system administrator or next level of technical support for assistance.
   - If the command executed properly and you have the << prompt, you are ready to enter component commands.
3. Enter each component command listed in the work order. Only *Message Set 1* versions of component commands can be used.

   For example:

   << CONN-DSX-T3::1-1-1,1-1-2;

   - If the system responds with OK, you can continue to enter component commands.
   - If the system does not respond with OK, check the syntax of the component command and reenter it.
4. Repeat Step 3 until all items on the work order have been entered.

5. When you have entered all the items on the work order, you have two options: save the alternate map for future use *or* abort the entries that you entered.

   - If you want to save the alternate map, enter:

     END-ED;

     Check to see if there are any component commands listed in the message.

     — If the system finds any incompatible or duplicate connections, it sends a message similar to the following example:

     ```
     /*
     Saving and verifying map file....
       No other command can be executed until
        the process is done.
       */

       <TID #n YY-MM-DD HH:MM:SS>
     M   COMPLD
        /* The following commands contain logical
             errors: */
        /* COMMAND #: COMMAND CODE, FROM PORT,
             TO PORT */
        "1:CONN-DSX-T3,1-01-1,1-01-1"
        "2:CONN-DSX1-T3,2-01-1,2-01-1"
        "3:CONN-DSX1-T3,2-01-1,3-01-1"
     ```

     In the preceding example, two problems have been identified: 1) a two-way cross-connection has the same FROM PORT and TO PORT; 2) two one-way cross-connections are using the same FROM PORT.

     Correct the component commands using the instructions found in Procedure 5-3, "Changing Alternate Map Files."

     — If the system does not find any incompatible or duplicate connections, it sends the following message:

     ```
     /*
     Saving and verifying map file....
       No other command can be executed until
        the process is done.
     */
     ```

     Once the processing is complete, that is, you have received the system prompt (<<), you can create another map by returning to Step 2 and repeating the rest of the procedure.

   - If you want to abort the entries you've just made, enter:

     ABT-ED;

Alternate Map File Changes

The changes to be made to alternate maps can come from two sources: either work orders from a Central Office or from the output message of the END-ED command.

The procedure for editing alternate map files follows.

Procedure 5-3. Changing Alternate Map Files

1. Have ready your work orders or the list of component commands from the message of the END-ED command.
2. Begin the editing session by entering:

   ED-PRMTR-MAP::NME;

   where

   NME = the 1 through 7 alphanumeric character name of the map being edited

   - If the command executed properly, that is you received the COMPLD message and you are on a Snider link (1, 2, or 3), check that you have the << prompt.
   - If you do not have the prompt, call your system administrator or next level of technical support for assistance.
3. Find the location of the component command to be changed by entering:

   LST-CMD;

   The system responds with a list of the component commands.
4. Enter the line number of the command to be changed.
5. Delete the command by entering:

   DLT-CMD::CMD#;

   where

   CMD# = the number associated with a given command in the LST-CMD output response; valid numbers are 1 through 1920
6. When the << prompt returns, re-enter the command with the correct information.
7. Repeat Steps 4 through 6 for each command to be changed.
8. When you have changed all the commands on the work order or those commands identified in an END-ED message, save the alternate map for future use *or* abort the entries that you entered, using one of the following commands:

- If you want to save the alternate map, enter:

  END-ED;

  Check to see if there are any component commands listed in the message.

  — If the system finds any incompatible or duplicate connections, it sends a message similar to the following example:

```
/*
Saving and verifying map file....
  No other command can be executed until the process
    is done.
*/

  <TID #n YY-MM-DD HH:MM:SS>
M  COMPLD
   /* The following commands contain logical errors: */
   /* COMMAND #: COMMAND CODE, FROM PORT, TO PORT */
   "1:CONN-DSX-T3,1-01-1,1-01-1"
   "2:CONN-DSX1-T3,2-01-1,2-01-1"
   "3:CONN-DSX1-T3,2-01-1,3-01-1"
;
```

  In the preceding example, two problems have been identified: 1) a two-way cross-connection has the same FROM PORT and TO PORT; 2) two one-way cross-connections are using the same FROM PORT.

  The component commands must be edited; return to Step 2.

  — If the system does not find any incompatible or duplicate connections, it sends the following message:

```
/*
Saving and verifying map file....
   No other command can be executed until the process
     is done.
*/
```

  Once the processing is complete, that is you have received the system prompt (<), you can create another map by returning to Step 2 and repeating the rest of the procedure.

  — If the system does not find any incompatible or duplicate connections, but you have a work order for another map, return to Step 2 and repeat the procedure for the next map.

  — If the system does not find any incompatible or duplicate connections and you do not have another work order, you have completed this procedure.

- If you want to abort the entries you have just made, enter:

  ABT-ED;

Alternate Map Deletion

The information about the alternate maps that are to be deleted comes from the Central Office or a work order.

The procedure for deleting alternate maps follows.

Procedure 5-4. Deleting Alternate Map Files

Delete the alternate map file by entering:

```
DLT-MAP::NME::DMOD;
```

where

NME = the 1 through 7 character name of the file being deleted. Entering **ALL** deletes all alternate maps.

DMOD = the mode for deleting an alternate map.
FRCD (forced) indicates DACS III-2000 does not require user confirmation.
NORM (normal), which is the default, indicates the system does require the user to confirm the command before it is executed.

- If the system responds with the COMPLD message, the alternate map file has been deleted.
- If the system responds with the DENY message, check the error code in Appendix C for an explanation. Call your system administrator or the next level of technical support for assistance, if necessary.

Alternate Map Retrieval

Two methods exist for reviewing alternate map information:

- use the RTRV-MAP-CMD; command to list the contents of the specified map
- use the RTRV-PRMTR-MAP; command to list the names of all the alternate maps along with their status and size as well as the number of maps on the system Both methods are described in the following procedure.

Procedure 5-5. Retrieving Alternate Maps

- To list the contents of a specific map, enter:

  RTRV-MAP-CMD::NME;

  where

  NME = the name of an existing alternate map

- To list the names of all the alternate map files, enter:

  RTRV-PRMTR-MAP;

Alternate Map Execution

When a user executes a map, the following actions are transparent to the user:

- the system checks DS3 cross-connections needed for a map
- the system makes necessary adjustments to those DS3 cross-connections, or test access connections, so the alternate map can be created. For example, it may take down DS3 connections except in the following case: with a 1x2 (bridge) broadcast, the CONN-BDCST-T3 command goes ahead and attempts to bridge off an existing cross-connection outside the alternate map.
- the system establishes alternate map connections
- if an alternate map was initially established for DS3 ports, which have since been re-equipped as STS-1 SONET ports, the map component commands referencing the STS-1 equipped ports will be denied.

The procedure for executing alternate maps follows.

Procedure 5-6. Executing Alternate Maps

1. Execute an alternate map by entering:

   `EXC-MAP:[TID]:NME:[CTAG]:[ACMD];`

   where

   `TID` = the target identification (optional)

   `NME` = the alternate map to be executed

   `CTAG` = the correlation tag (optional)

   `ACMD` = the activation mode; specified as either NORM or FRCD. The default is NORM. (optional).

   - If the activation mode is NORM, you are required to confirm the command before it is executed.
   - If the activation mode is FRCD, no confirmation is required.

2. Check the message that is displayed after the command has executed. It lists all the unexecuted commands in the alternate map and provides a four-character error code.

3. Look up the error code in Appendix C and try to remedy the problem.

   - If that does not work, execute the commands one at a time.
   - If there still are problems, call your system administrator or next level of technical support.
   - If the whole map didn't execute, and it was for some other reason than you didn't have the proper permissions (PICC), call your system administrator or the next level of technical support.

Circuit Connection Provisioning

Circuit provisioning involves establishing six different types of cross-connections: one-way, two-way, rollover, broadcast, conference, and loopback.

It is important to remember that all DACS III-2000 cross-connections are one-way; thus, a two-way cross-connection actually consists of two one-way cross-connections.

The system enables you to change cross-connections. For example, one direction of a two-way cross-connection can be disconnected to make it a one-way cross-connection; a one-way cross-connection can be converted to a two-way cross-connection by connecting another one-way cross-connection between the same ports but in the opposite direction.

There are two port parameters in circuit provisioning commands: output mode and redlined. If a cross-connection is established as redlined, it must be specified as redlined when it is disconnected.

The output mode parameter specifies what is transmitted; this parameter can be:

- NORM, for a normal cross-connected signal
- TERM, for an idle signal
- AIS, for the alarm indication signal
- BAD, for a bad signal that generates downstream alarms.

The output mode parameter default is NORM.

One-Way Cross-Connections

One-way cross-connections link an input port with an output port. The procedures for establishing and disconnecting one-way cross-connections follow.

Procedure 5-7. Establishing One-Way Cross-Connections

1. Obtain circuit information from the Central Office or from a work order.
2. Enter the appropriate cross-connect command form for your signal type:
   - For *Message Set 1:*

     `CONN-DSX1-{STS1|T3}:[TID]:FRPT,TOPT:[CTAG]:[RDLD]:[TOMD];`

   - For *Message Set 2:*

     `ENT-CRS-{STS1|T3}:[TID]:FRPT,TOPT:[CTAG]::1WAY:,TOMODE=[TOMD]:,[SST];`

     where

     `TID` = the target identification (optional)

     `FRPT` = the FROM port, identified as unit-slot-port. Allowable vaues for unit are 1 through 4 on a 1024-size system or 1 through 8 on a 2048-size system; slot, 1 through 30; port, 1 through 8.

     `TOPT` = the TO port, identified as unit-slot-port. Allowable values for unit are 1 through 4 on a 1024-size system or 1 through 8 on a 2048-size system; slot, 1 through 30; port, 1 through 8.

     `CTAG` = the correlation tag (optional)

     `RDLD` = the circuit is redlined, if entered (optional). Allowable values are YES, NO, and RDLD.

     `TOMD` = the TO output mode. Allowable values are NORM, TERM, BAD, and AIS, specified in *Message Set 2* as `TOMODE=` {value} (optional).

     `SST` = the option to specify a redlined circuit (optional).

   - If the system responds with the `COMPLD` message, the one-way cross-connect has been established.
   - If the system responds with the `DENY` message, check the error code in Appendix C for an explanation.
3. Notify circuit provisioning when cross-connections have been established.

Procedure 5-8. Retrieving One-Way Cross-Connections

Retrieve the one-way cross-connection information by entering the appropriate command form for your signal type:

— For *Message Set 1:*

```
RTRV-DSX-{STS1|T3}:[TID]:ELOC:[CTAG];
```

— For *Message Set 2:*

```
RTRV-CRS-{STS1|T3}:[TID]:{EC1P|DS3P}:[CTAG];
```

where

TID = the target identifier of the DACS III-2000 system to which the command is going

EC1P|DS3P = the ports associated with the given entity, identified as unit-slot-port; either {STS1OUT|DS3OUT}-{1 through 4}-{1 through 30} on a 1024-size system or {STS1OUT|DS3OUT}-{1 through 8}-{1 through 30} on a 2048-size system; {STS1IN|DS3IN}-{1 through 4}-{1 through 30} on a 1024-size system or {STS1IN|DS3IN}-{1 through 8}-{1 through 30} on a 2048-size system; UNIT-{1 through 4} on a 1024-size system or UNIT-{1 through 8} on a 2048-size system, or ALL

ELOC = the ports associated with the given entity, identified as unit-slot-port; either {STS1OUT|DS3OUT}-{1 through 4}-{1 through 30} on a 1024-size system or {STS1OUT|DS3OUT}-{1 through 8}-{1 through 30} on a 2048-size system, UNIT-{1 through 4} on a 1024-size system or UNIT-{1 through 8} on a 2048-size system, or ALL

CTAG = the correlation tag used to associate a command with an output response.

- If the system responds with the COMPLD message, the retrieval has completed successfully.
- If the system responds with the DENY message, check the error code in Appendix C for an explanation. Call your system administrator or the next level of technical support for assistance, if necessary.

Procedure 5-9. Disconnecting One-Way Cross-Connections

CAUTION:
Loss of service.
Once a one-way connection is disconnected it is no longer available for service. Double-check the FRPT and TOPT parameters in your command line against those ports provided by the Central Office or on the work order before entering the command.

1. Obtain circuit information from the Central Office or from a work order.
2. Enter the appropriate disconnect command form for your signal type
   — For *Message Set 1:*

   ```
   DISC-DSX1-{STS1|T3}:[TID]:FRPT,TOPT:[CTAG]:[RDLD];
   ```

   — For *Message Set 2*:

   ```
   DLT-CRS-{STS1|T3}:[TID]:FRPT,TOPT:[CTAG]::1WAY:
   INCL={Y,N};
   ```

   where

   TID = the target identification (optional)

   FRPT = the FROM input port, identified as unit-slot-port. Allowable values for unit are 1 through 4 on a 1024-size system or 1 through 8 on a 2048-size system; slot, 1 through 30; port, 1 through 8.

   TOPT = the TO port, identified as unit-slot-port. Allowable values for unit are 1 through 4 on a 1024-size system or 1 through 8 on a 2048-size system; slot, 1 through 30; port, 1 through 8.

   CTAG = the correlation tag (optional)

   RDLD = the redlined circuit, if entered (optional)

   INCL = the redlined disconnect; specified by **INCL**= {Y,N} (optional).

   - If the system responds with the COMPLD message, the one-way cross-connect has been established.
   - If the system responds with the DENY message, check the error code in Appendix C for an explanation.

Two-way Cross-Connections

Two-way cross-connections connect two ports so that they communicate in two directions.

The procedures for establishing, retrieving, and disconnecting two-way cross-connections follow.

Procedure 5-10. Establishing Two-way Cross-Connections

1. Obtain circuit information from the Central Office or from a work order.
2. Enter the appropriate cross-connect command form for your signal type:
   — For *Message Set 1:*

   ```
   CONN-DSX-{STS1|T3}:[TID]:FRPT,TOPT:[CTAG]:[RDLD]:
   [FRMD]:[TOMD];
   ```

   — For *Message Set 2*:

   ```
   ENT-CRS-{STS1|T3}:[TID]:FRPT,TOPT:[CTAG]::2WAY:
   FOMODE=[FRMD],TOMOD=[TOMD]:,[SST];
   ```

where

TID = the target identification (optional)

FRPT = the FROM port, identified as unit-slot-port. Allowable values for unit are 1 through 4 on a 1024-size system or 1 through 8 on a 2048-size system; slot, 1 through 30; port, 1 through 8.

TOPT = the TO port, identified as unit-slot-port. Allowable values for unit are 1 through 4 on a 1024-size system or 1 through 8 on a 2048-size system; slot, 1 through 30; port, 1 through 8.

CTAG = the correlation tag (optional)

RDLD = the circuit is redlined, if entered (optional)

FRMD = the FROM output mode. Allowable values are NORM, TERM, BAD, and AIS, specified in *Message Set 2* as **FOMODE**= {value} (optional)

TOMD = the TO output mode. Allowable values are NORM, TERM, BAD, and AIS, specified in *Message Set 2* as **TOMODE**= {value} (optional)

SST = the option to specify a redlined circuit (optional).

- If the system responds with the COMPLD message, the cross-connection has been established.
- If the system responds with the DENY message, check the error code in Appendix C for an explanation.

3. Notify circuit provisioning when cross-connections have been established.

Procedure 5-11. Retrieving Two-way Cross-Connections

Retrieve the two-way cross-connection information by entering the appropriate command form for your signal type:

— For *Message Set 1:*

```
RTRV-DSX-{STS1|T3}::ELOC;
```

— For *Message Set 2:*

```
RTRV-CRS-{STS1|T3}::{EC1P|DS3P};
```

where

ELOC = the output interface circuit packs containing the ports for which cross-connect information is desired. **UNIT** specifies all provisioned output circuit packs in a UNIT. **ALL** specifies all provisioned output circuit packs in the system. Multiple entities can be specified.

EC1P|DS3P = the ports associated with the given entity, identified as unit-slot-port; either {STS1OUT|DS3OUT}-{1 through 4}-{1 through 30} on a 1024-size system or {STS1OUT|DS3OUT}-{1 through 8}-{1 through 30} on a 2048-size system; {STS1IN|DS3IN}-{1 through 4}-{1 through 30} on a 1024-size system or {STS1IN|DS3IN}-{1 through 8}-{1 through 30} on a 2048-size system; UNIT-{1 through 4} on a 1024-size system or UNIT-{1 through 8} on a 2048-size system, or ALL

These commands retrieve one-way connections. To retrieve both directions of a two-way cross-connection, ELOC or {EC1P|DS3P} must be specified for both output ports.

- If the system responds with the COMPLD message, the retrieval has completed successfully.
- If the system responds with the DENY message, check the error code in Appendix C for an explanation. Call your system administrator or the next level of technical support for assistance, if necessary.

Procedure 5-12. Disconnecting Two-way Cross-Connections

CAUTION:
Loss of service.
Once a two-way connection is disconnected it is no longer available for service. Double-check the FRPT and TOPT parameters in your command line against those ports provided by the Central Office or on the work order before entering the command.

1. Obtain circuit information from the Central Office or from a work order.
2. Enter the appropriate disconnect command form for your signal type:
   — For *Message Set 1:*

   ```
   DISC-DSX-{STS1|T3}:[TID]:FRPT,TOPT:[CTAG]:[RDLD];
   ```

   — For *Message Set 2:*

   ```
   DLT-CRS-{STS1|T3}:[TID]:FRPT,TOPT:[CTAG]::2WAY:
   INCL={Y,N};
   ```

   where

   TID = the target identification (optional)

   FRPT = the FROM input port, identified as unit-slot-port. Allowable values for unit are 1 through 4 on a 1024-size system or 1 through 8 on a 2048-size system; slot, 1 through 30; port, 1 through 8.

   TOPT = the TO port, identified as unit-slot-port. Allowable values for unit are 1 through 4 on a 1024-size system or 1 through 8 on a 2048-size system; slot, 1 through 30; port, 1 through 8.

   CTAG = the correlation tag (optional)

   RDLD = the redlined circuit, if entered (optional)

   INCL = the redlined circuit, if entered; specified in *Message Set 2* as INCL= {Y,N} (optional).

   - If the system responds with the COMPLD message, the two-way cross-connect has been disconnected.
   - If the system responds with the DENY message, check the error code in Appendix C for an explanation.

Rollover Connections

The DACS III-2000 system provides a command that rolls over a one-way cross-connection or one direction of a two-way cross connection between an input port (named FRPT) and an output port (named TOPT) so that the FROM port is replaced by a new input port (named NPT). Your office procedures may require additional activities.

The procedures for establishing and retrieving rollover cross-connects follow.

Procedure 5-13. Establishing Rollover Cross-Connections

CAUTION:
Loss of service.
Unless a broadcast or new service signal is present at the NEWFROM input port, a service interruption will occur, and, if the input is in the INIT or NDRVN state, no alarms will be present to alert service personnel.
Verify that a signal is present at the NEWFROM port before executing this procedure.

1. Obtain circuit information from the Central Office or from a work order.
2. Enter the appropriate cross-connect command form for your signal type:

   CONN-ROLL-{STS1|T3}:[TID]:FRPT,TOPT,NPT:[CTAG]:[RDLD]:[TOMD];

   where

   TID = the target identification (optional)

   FRPT = the FROM port, identified as unit-slot-port. Allowable values for unit are 1 through 4 on a 1024-size system or 1 through 8 on a 2048-size system; slot, 1 through 30; port, 1 through 8.

   TOPT = the TO port, identified as unit-slot-port. Allowable values for unit are 1 through 4 on a 1024-size system or 1 through 8 on a 2048-size system; slot, 1 through 30; port, 1 through 8.

   NPT = the new FROM port, identified as unit-slot-port. Allowable values for unit are 1 through 4 on a 1024-size system or 1 through 8 on a 2048-size system; slot, 1 through 30; port, 1 through 8.

   CTAG = the correlation tag (optional)

   RDLD = the circuit is redlined, if entered (optional)

   TOMD = the TO output mode. Allowable values are NORM, TERM, BAD, and AIS (optional).

- If the system responds with the COMPLD message, the rollover cross-connection has been established.
- If the system responds with the DENY message, check the error code in Appendix C for an explanation.

3. Notify circuit provisioning when cross-connections have been established.

Procedure 5-14. Retrieving Rollover Cross-Connections

Retrieve the new one-way cross-connection information by entering the appropriate command form for your signal type:

— For *Message Set 1:*

```
RTRV-DSX-{STS1|T3}::ELOC;
```

— For *Message Set 2:*

```
RTRV-CRS-{STS1|T3}::{EC1P|DS3P};
```

where

ELOC = the ports associated with the given entity, identified as {STS1OUT|DS3OUT}-{1 through 4}-{1 through 30} on a 1024-size system or {STS1OUT|DS3OUT}-{1 through 8}-{1 through 30} on a 2048-size system; UNIT-{1 through 4} on a 1024-size system or UNIT-{1 through 8} on a 2048-size system, or ALL

EC1P|DS3P = the ports associated with the given entity, identified as unit-slot-port; either {STS1OUT|DS3OUT}-{1 through 4}-{1 through 30} on a 1024-size system or {STS1OUT|DS3OUT}-{1 through 8}-{1 through 30} on a 2048-size system; {STS1IN|DS3IN}-{1 through 4}-{1 through 30} on a 1024-size system or {STS1IN|DS3IN}-{1 through 8}-{1 through 30} on a 2048-size system; UNIT-{1 through 4} on a 1024-size system or UNIT-{1 through 8} on a 2048-size system, or ALL

- If the system responds with the COMPLD message, the retrieval has completed successfully.
- If the system responds with the DENY message, check the error code in Appendix C for an explanation. Call your system administrator or the next level of technical support for assistance, if necessary.

1x2 (Bridge) Broadcast Cross-Connections

Broadcast connections, also known as bridge cross-connections, allow for the connection of one input port to two output ports. In other words, you cannot connect more than two output ports to one input port using the `CONN-BDCST-{STS1|T3}` command.

The procedure establishing a broadcast connection follows.

Procedure 5-15. Establishing 1x2 (Bridge) Broadcast Cross-Connections

Do not cross-connect any more than two output ports to one input port.

1. Obtain circuit information from the Central Office or from a work order.
2. Enter the appropriate cross-connect command form for your signal type:

   `CONN-BDCST-{STS1|T3}:[TID]:FRPT,ADTO:[CTAG]:[RDLD]:[ADMD];`

   where

   `TID` = the target identification (optional)

   `FRPT` = the FROM port, identified as unit-slot-port. Allowable values for unit are 1 through 4 on a 1024-size system or 1 through 8 on a 2048-size system; slot, 1 through 30; port, 1 through 8.

   `ADTO` = the ADD TO port, identified as unit-slot-port. Allowable values for unit are 1 through 4 on a 1024-size system or 1 through 8 on a 2048-size system; slot, 1 through 30; port, 1 through 8.

   `CTAG` = the correlation tag (optional)

   `RDLD` = the circuit is redlined, if entered (optional)

   `ADMD` = the ADD TO output mode specified as NORM, TERM, or BAD (optional). Default is NORM.

   - If the system responds with the `COMPLD` message, the 1x2 (bridge) broadcast cross-connection has been established.
   - If the system responds with the `DENY` message, check the error code in Appendix C for an explanation.
3. Notify circuit provisioning when cross-connections have been established.

Procedure 5-16. Retrieving 1x2 (Bridge) Broadcast Cross-Connections

1. Retrieve 1x2 (bridge) broadcast connections by entering the appropriate command form for your signal type:

   RTRV-BDCST-{STS1|T3}:[TID]:{EC1P|DS3P}:[CTAG]:[STGE];

   where

   TID = the target identification (optional)

   EC1P|DS3P = the equipment location, identified as unit-slot-port, {STS1IN|DS3IN}-{1 through 4}-{1 through 30} on a 1024-size system or {STS1IN|DS3IN}-{1 through 8}-{1 through 30} on a 2048-size system, or ALL. Allowable values for unit are 1 through 4 on a 1024-size system or 1 through 8 on a 2048-size system; slot, 1 through 30; port, 1 through 8.

   CTAG = the correlation tag (optional)

   STGE = the stage where bridging occurs. Allowable values are INPUT, OUTPUT, CENTER, and ALL.

   - If the system responds with the COMPLD message, the retrieval was successful.
   - If the system responds with the DENY message, check the error code in Appendix C for an explanation.

Procedure 5-17. Disconnecting 1x2 (Bridge) Broadcast Cross-Connections

1. Obtain circuit information from the Central Office or from a work order.
2. Enter the appropriate disconnect command form for your signal type:

   — For *Message Set 1:*

   DISC-DSX1-{STS1|T3}:[TID]:FRPT,TOPT:[CTAG]:[RDLD];

   — For *Message Set 2:*

   DLT-CRS-{STS1|T3}:[TID]:FRPT,TOPT:[CTAG]::1WAY:INCL=[Y,N];

   where

   TID = the target identification (optional)

   FRPT = the FROM port

   TOPT = the TO port

   CTAG = the correlation tag (optional)

RDLD = the redlined circuit, if entered (optional)

INCL = the redlined disconnect; specified by **INCL**= {Y,N} (optional).

- If the system responds with the COMPLD message, the 1x2 (bridge) broadcast cross-connect has been disconnected.
- If the system responds with the DENY message, check the error code in Appendix C for an explanation.

Multiple Port (Conference) Broadcast Cross-Connections

Multiple port broadcast, or conferencing, can be provisioned in either of two modes:

Standard Broadcast Mode	implemented with no cross-connection rearrangement. In this mode, there is a probability some broadcast legs cannot be established under extreme system loading conditions.
Directed Rearrangement Mode	allows removal of broadcast leg blocking, should it occur, by rearrangement of required cross-connections

The multiple port (conference) broadcast feature is independent of the 1x2 (bridge) broadcast feature.

Maximized use of the multiple port (conference) broadcast feature is dependent on specifying, to the system, that traffic can be rearranged; instructions are provided in Procedure 5-18. To prevent the feature from rearranging traffic, see Procedure 5-19.

The procedures for entering, retrieving, and deleting broadcast legs are described in Procedures 5-20, 5-21, and 5-22, respectively.

Procedure 5-18. Provisioning Multiple Port (Conference) Broadcast for Traffic Rearrangement

This procedure enables all I/O bays, regardless of the signal type, to have multiple port broadcasts set up. Enter the command for rearranging traffic by setting the rearrange parameter to **YES**.

```
ED-PRMTR-NE::::::,,::,:,::YES;
```

- If the system responds with the COMPLD message, the multiple port (conference) broadcast feature has been provisioned for rearrangement.
- If the system responds with the DENY message, check the error code in Appendix C for an explanation.

Procedure 5-19. Preventing Multiple Port (Conference) Broadcast from Rearranging Traffic

This procedure prevents all I/O bays, regardless of the signal type, from having multiple port broadcasts set up. Enter the command for preventing the rearrangement of traffic by setting the rearrange parameter to NO.

```
ED-PRMTR-NE::::::,,::,:,::NO;
```

- If the system responds with the COMPLD message, the multiple port (conference) broadcast feature has been provisioned for standard broadcast mode.
- If the system responds with the DENY message, check the error code in Appendix C for an explanation.

Procedure 5-20. Entering Multiple Port (Conference) Broadcast Leg(s)

1. Obtain circuit information from the Central Office or from a work order.

CAUTION:
Disruption of service on ports affected by a conference.
If traffic is rearranged and not backed up to optical cartridge, future restorations from optical cartridge may not be up-to-date. For the initial attempt of establishing a conference, the rearrangement parameter should always be set to **N** *(NO).*

2. Enter the ports to be connected to the conference using the appropriate command form for your signal type:

   — For *Message Set 1:*

   ```
   ENT-CONF-{STS1|T3}::FRPT,TOPT::::[TOMD],N:,[SST];
   ```

   — For *Message Set 2:*

   ```
   ENT-CONF-{STS1|T3}::FRPT,TOPT::::[TOMD,]REAR=N:,[SST];
   ```

   where

   FRPT = the FROM input port

   TOPT = the TO output port(s). Multiple legs can be specified, using multiple addressing option; see "Multiple Addressing Rules" in the *DACS III-2000 Release 4.0 Commands and Messages.*

   TOMD = specifies what is transmitted from the TO output port; allowable values are NORM, TERM, and BAD; specified in *Message Set 2* as **TOMODE**={NORM,TERM,BAD} (optional)

SST = the secondary state of the circuit, identified as RDLD (redlined) or null, that is no value is entered. If the FROM is already connected, the SST (RDLD or null) specification must be the same as for the present connections to this FROM (optional).

3. Check the system response.

- If the system responds with the COMPLD message and you have more broadcast legs to enter, return to Step 2.

  A typical COMPLD message looks like this:

```
  <TID #n YY-MM-DD HH:MM:SS>
M ENT CONF{STS1|T3}::<FRPT,TOPT:CTAG:::TOMD,
   RE:,SST> COMPLD
;
```

- If the system responds with the COMPLD message and you have entered all the broadcast legs, the procedure has completed successfully.

- If the system responds with the PRTL message, perform the following steps:

  a. Examine the message to determine which legs were not established and why.

     A typical PARTL message is shown below:

     — For *Message Set 1:*

```
  <TID #n YY-MM-DD HH:MM:SS>
M ENT  CONF{STS1|T3}::<FRPT,TOPT:CTAG:::TOMD,
   RE:,SST> PRTL
 /* TO PORT:REARRANGE INPUT=,REARRANGE
     OUTPUT=,REARRANGE SST=,TBLIST= */
 "< TO PORT:REARRANGE INPUT=,REARRANGE
     OUTPUT=,REARRANGE SST=,TBLIST>"
;
```

     — For *Message Set 2:*

```
   <TID YY-MM-DD HH:MM:SS>
M  ENT CONF {STS1|T3}::<FRPT,TOPT:CTAG:::TOMD,
     RE:,SST> PRTL
"<TO PORT:REARRANGE INPUT=,REARRANGE OUTPUT=,
   REARRANGE SST=,TBLIST>"
  ;
```

where

TO PORT	= the output port of the broadcast leg that could not be set up
REARRANGE INPUT	= the input port that will have to be rearranged in order to establish the broadcast leg to the BDCST output port
REARRANGE OUTPUT	= the output port that will have to be rearranged in order to establish the broadcast leg to the BDCST output port
REARRANGE SST	= whether or not the circuit that has been identified to be rearranged is redlined. RDLD indicates the circuit is redlined. If null, the circuit is not redlined.
TBLIST	= the denial code associated with the broadcast leg that could not be established; RA indicates that a signal needs to be rearranged before the leg can be established, HDW indicates hardware failure, SW indicates software problems, NA indicates the connection was not attempted.

b. Continue this procedure at Step 4.

- If the system responds with the DENY message, perform the following steps:

  a. Check the error code for an explanation.

  A typical DENY message looks like this:

  — For *Message Set 1:*

```
  <TID #n YY-MM-DD HH:MM:SS>
M ENT CONF{STS1|T3}::<FRPT,TOPT:
   CTAG:::TOMD,RE:,SST> DENY
  <ERCD>
  /* <optional explanatory text> */
;
```

— For *Message Set 2:*

```
   <TID YY-MM-DD HH:MM:SS>
M ENT CONF {STS1|T3}::<FRPT,TOPT:
   CTAG:::TOMD,RE:,SST> DENY
  <ERCD>
   /* <optional explanatory text> */
;
```

b. Correct the problem that caused the error code.

c. If you have more broadcast legs to enter, return to Step 2.

4. Check the TBLIST value.

   - If the TBLIST shows the not attempted (NA) code, try again to establish the legs that are labeled NA.
   - If the TBLIST *does not* show the rearrange (RA) code, report the failure and the code to the Central Office or call your system administrator or the next level of technical support.
   - If the TBLIST shows the rearrange (RA) code, continue this procedure at Step 5.

5. Check to see if the system is provisioned for rearrangement by entering:

   RTRV-PRMTR-NE;

   - If the system is *not* provisioned for rearrangement, report the failure to the Central Office and return to Step 2 if you have more multiple port (conference) broadcast legs to enter.

CAUTION:
Possible service interruption on rearranged traffic (similar to a rollover). Rearrangements done during peak hours could result in service interruption. Enter the multiple port (conference) broadcast legs during off-hours.

   - If the system is provisioned for rearrangement, re-enter the command form for your signal type, with the rearrangement parameter set to Y using the appropriate *Message Set*:

     — For *Message Set 1:*

     ENT-CONF-{STS1|T3}::1-2-3,1-2-5::::,Y;

     — For *Message Set 2:*

     ENT-CONF-{STS1|T3}::1-2-3,1-2-5::::,REAR=Y;

CAUTION:
Service disruption.
Media may not be up-to-date. Back up database from disk (PRI) to optical drive (SEC) whenever an entire conference has been set up and the command completes with either the COMPLD or PRTL message.

6. Check the system response and return to Step 3.

Procedure 5-21. Retrieving Multiple Port (Conference) Broadcast Leg(s)

1. Get the FROM port information from the report requester.
2. Retrieve the multiple port (conference) broadcast information by entering the appropriate command form for your signal type:

   RTRV-CONF-{STS1|T3}::{EC1P|DS3P};

   where

   EC1P|DS3P = the equipment location, identified as
   UNIT-{1 through 4} on a 1024-size system or
   UNIT-{1 through 8} on a 2048-size system.

   - If the system responds with the COMPLD message, the retrieval of conference information completed successfully.
   - If the system responds with the DENY message, check the error code in Appendix C for an explanation. Call your system administrator or the next level of technical support for assistance, if necessary.

Procedure 5-22. Deleting Multiple Port (Conference) Broadcast Leg(s)

CAUTION:
Loss of service.
Once a conference is deleted it is no longer available for service. Double-check the FRPT and TOPT parameters in your command line against those ports provided by the Central Office or on the work order before entering the command.

1. Obtain circuit information from the Central Office or from a work order.
2. For each conference to be deleted, enter the appropriate command form for your signal type:

   DLT-CONF-{STS1|T3}::FRPT,TOPT::::INCL={Y,N};

where

FRPT = the FROM input port

TOPT = the TO output port

INCL = specifies the disconnection of redlined facilities; expressed as either Y, for disconnection of redlined facilities only, or N, for disconnection of non-redlined facilities only; specified in *Message Set 2* as INCL= {Y,N} (optional).

3. Check the system response.
   - If the system responds with the COMPLD message, the disconnect is complete.
   - If the system responds with the DENY message, check the error code in Appendix C for an explanation.
   - If there is a hardware or software failure and more than one leg is specified, the command ceases at the point of failure and partially (PRTL) completes.
4. Check the TBLIST value.
   - If the TBLIST shows the NA (not attempted) code, try again to disconnect the legs that are labeled NA.
   - For any other TBLIST value, call your system administrator or next level of technical support for assistance.

Loopbacks

Loopbacks are cross-connections of input ports to their own output ports. Loopbacks can be established on a port that is not cross-connected or on a port that is not cross-connected, but is under monitor test access. Use a loopback to sectionalize facility trouble.

Procedures for operating and releasing loopbacks are in Chapter 7, "Facilities Testing."

Command Verification Provisioning

The command verification feature minimizes potential service-affecting situations resulting from user-entered commands by requiring the user to verify the execution of the commands. This verification appears in both command mode and menu/prompt mode.

The command verification feature is provisionable for any user identification (UID) on a Snider link (links 1, 2, and 3) and on either X.25 link (links 5 and 6).

Before the command verification feature can be used by a particular login, permission must be established to use the feature.

Procedures for setting the command verification mode and actually using command verification follow.

Procedure 5-23. Setting Command Verification Mode

Decide which user(s) should have the command verification feature, then do one of the following depending on the status of the user's ID. It is recommended that a login for a person be set to **HUMAN**; the login for an Operations System (OS) be set to **MACHINE**.

- To create a new login for the user, set the command verification mode by entering:
  - For *Message Set 1*:

    CRTE-LGN::::PWD,UID:UPC:HUMAN;

  - For *Message Set 2*:

    ENT-SECU-USER::UID:::PWD,,UPC:UTYPE=HUMAN;

    where

    PWD = the password associated with the user identification (UID)

    UID = the new user identification name (UID)

    UPC = the user community functional category (UCFC) and the user community authorization level (UCAL)

    For example, to create a login identification, in *Message Set 1*, of "kep" with the password of "snow12" and a UCFC of "System Maintenance" and a UCAL of "1," you would enter:

    CRTE-LGN::::snow12,kep:M1:HUMAN;

- To change an existing login, first retrieve the information about the user, using the RTRV-PRVG-USER (*Message Set 1*) or RTRV-SECU-USER (*Message Set 2*) command, and then, if necessary, set the command verification mode by entering:

  — For *Message Set 1*:

  ```
  CHG-LGN:::OPWD,OID:[NPWD],[NID]:UPC:HUMAN;
  ```

  — For *Message Set 2*:

  ```
  ED-SECU-USER::OID:::[NID],[NPWD],,[UPC]:
  UTYPE=HUMAN;
  ```

  where

  `OPWD` = the old password

  `OID` = the old user identification (UID)

  `NID` = the new user identification (UID) (optional)

  `NPWD` = the new password associated with the user identification (UID) (optional)

  `UPC` = the user community functional category (UCFC) and the user community authorization level (UCAL) (optional)

  For example, to change the login identification, in *Message Set 2*, of "rmb" that has the password of "warm34" and a UCFC of "Security Management" and a UCAL of "5," you would enter:

  ```
  ED-SECU-USER::rmb:::,,,:UTYPE=HUMAN;
  ```

- To create or change a login that should not have the command verification feature; enter the commands as described in this procedure, substituting the word `MACHINE` for `HUMAN`.

  For example, to restrict the login identification, in *Message Set 1*, of "rmb" that has the password of "warm34" and a UCFC of "Security Management" and a UCAL of "5" from using the command verification feature, you would enter:

  ```
  CHG-LGN:::warm34,rmb:,,S5:MACHINE;
  ```

Using Command Verification

The command verification feature is operational for the following commands:

- CHG-TACC-{STS1|T3} (changing test access)
- CONN-ROLL-{STS1|T3} (connecting rollovers)
- CPY-MEM (copying memory)
- DLT-CRS-{STS1|T3} (disconnecting one-way and two-way cross-connects, *Message Set 2* only)
- DISC-DSX-{STS1|T3} (disconnecting two-way cross-connects, *Message Set 1* only)
- DISC-DSX1-{STS1|T3} (disconnecting one-way cross-connects, *Message Set 1* only)
- ED-PRMTR-{EC1|T3} (when changing the output mode of a port within a broadcast cross-connection, *Message Set 1* only)
- ED-{EC1|T3} (when changing the output mode of a port within a broadcast cross-connection, *Message Set 2* only)
- ENT-CONF-{STS1|T3} (rearranging traffic)
- INIT-SYS (initializing the system)
- INH-SW-EQPT (inhibiting automatic protection switching)
- OPR-LPBK-{STS1|T3} (operating loopbacks)
- RMV-EQPT (removing equipment)
- SW-TOPROTN-EQPT (switching, manually, from a working entity to a protection entity)
- SW-TOWKG-EQPT (switching, manually, from a protection entity to a working entity)

If your login has been provisioned for command verification, each time you enter one of the listed commands the system displays a warning message and asks you if you want to execute the command. Responding with `N`, meaning no, takes you back to the system prompt.

Responding with `Y`, meaning yes, causes the command to be executed.

Critical Alarm Provisioning

The critical alarm feature can be provisioned for facility problems only, equipment problems only, or both facility and equipment problems. You can also set the feature so that no critical alarms are reported. The initial system default is NONE.

The procedure for provisioning the critical alarm feature follows. The procedure for clearing critical alarms is located in Chapter 9, "Troubleclearing—General."

Procedure 5-24. Provisioning Critical Alarms

Do one of the following depending on which category of critical alarms you want to receive (facility, equipment, or both) or the fact that you do not want to receive any critical alarms:

- To request critical alarms for facility problems only, set the failure type to facility and establish the failure threshold by entering:

  ED-PRMTR-NE::::::,,::,:FAC,[FTH];

  where

  FTH = the facility failure threshold. Allowed values are 1 through 64 failures; the default value is CURVAL. (optional). The initial value is 1.

- To request critical alarms for equipment problems only, set the failure type to equipment by entering:

  ED-PRMTR-NE::::::,,::,:EQPT;

  The failure threshold is not used for equipment.

- To request critical alarms for both equipment and facility problems, set the failure type to both and establish the failure threshold by entering:

  ED-PRMTR-NE::::::,,::,:BOTH,[FTH];

  where

  FTH = the facility failure threshold. Allowed values are 1 through 64 failures; the default value is CURVAL (optional). The initial value is 1.

- To request that no critical alarms be reported, set the failure type to none by entering:

  ED-PRMTR-NE::::::,,::,:NONE;

  NONE is the initial system default.

Database Capture Buffer Provisioning

DACS III-2000 creates a history file, or database capture buffer, which contains the provisioning database changes. The database capture buffer stores and allows retrieval of the last 500 provisioning database changes. When the database changes are retrieved with the RTRV-DBCB command, the user may specify date, time, database sequence number (DSEQ), or user identification name (UID).

Procedure 5-25. Provisioning Database Capture Buffer

- To provision the feature for the whole system, enter:

  ED-PRMTR-NE::::::,,:ON;

- To activate the feature for your own use, enter

  ACT-DBCB;

  Once you retrieve the capture buffer with the RTRV-DBCB command, the capture buffer is no longer activated. The ACT-DBCB command needs to be entered again to activate the capture buffer.

Procedure 5-26. Retrieving Messages from Database Capture Buffer

Retrieve a history of provisioning changes by entering:

RTRV-DBCB::::DATE:TIME:DSEQ:UID;

where

DATE = the date from which to begin retrieving database changes; in the form of YYMMDD

TIME = the time from which to begin retrieving database changes; in the form of HHMMSS

DSEQ = the database sequence number; specified as DSEQ-<decimal number>; the decimal number may have up to four digits

UID = the user identification name (UID)

- If the system responds with the COMPLD message, the retrieval was successful.
- If the system responds with the DENY message, check the error code in Appendix C for an explanation.

Performance Monitoring Preparations

To enter the commands discussed in this section, you must have a UCFC of PM and a UCAL of 5 or a UCFC of S and a UCAL of 3.

Performance Monitoring Provisioning

You can turn the performance monitoring feature for both STS-1 section and DS3 line ON or OFF using the ED-PRMTR-NE command. The system's initial value is OFF. When turning the feature ON, you may also specify the maximum number of secondary data lines that can be reported in any 60-minute interval. (Secondary data lines provide parameter names and the PM data that are being reported, and other additional information not included in the header or primary data lines.) When the ED-PRMTR-NE command is ON, you can schedule a report for a future time. When you set the command to OFF, it removes *all* your schedules, so you must create a schedule after you have turned on performance monitoring. As the system executes the command, it sets each hourly and daily register to 0, starts collecting data, and sends scheduled reports for the parameter counts.

It should be noted that turning performance monitoring ON or OFF does not affect the system's ability to set bipolar violation (BPV) error rate threshold crossing alarms.

Procedure 5-27. Provisioning Performance Monitoring

Do one of the following depending on whether you want to turn performance monitoring *ON* or *OFF*, or check how it is provisioned:

- To turn performance monitoring *ON*, enter the following command:

  ED-PRMTR-NE:[TID]::[CTAG]:::,,::ON,[PMDL];

  where

  TID = the target identification (optional)

  CTAG = the correlation tag (optional)

  PMDL = the maximum number of secondary data lines that can be reported by the REPT PM EC1 or REPT PM T3 message in any 60-minute interval. The system initialization value is 1800, range is 1 to 3600, and the default is the value currently stored in the database (optional).

— If the system responds with the COMPLD message, the command completed successfully:

```
  <TID #n YY-MM-DD HH:MM:SS>
M  ED PRMTR NE:<TID::CTAG>:::,,::ON,<PMDL> COMPLD
;
```

— If the system responds with the DENY message, check the error code in Appendix C for an explanation.

- To turn performance monitoring *OFF*, enter the following command:

ED-PRMTR-NE:[TID]::[CTAG]:::,,::OFF;

where

TID = the target identification (optional)

CTAG = the correlation tag (optional)

— If the system responds with the COMPLD message, the command completed successfully:

```
  <TID #n YY-MM-DD HH:MM:SS>
M  ED PRMTR NE:<TID::CTAG>:::,,::OFF COMPLD
;
```

— If the system responds with the DENY message, check the error code in Appendix C for an explanation.

- To check to see if the feature is *ON* or *OFF*, enter the following command:

RTRV-PRMTR-NE:[TID]::[CTAG];

where

TID = the target identification (optional)

CTAG = the correlation tag (optional)

— If entered correctly, the system responds with either ON or OFF in the PM-FEAT parameter of the following message:

```
  <TID #n YY-MM-DD HH:MM:SS>
M  RTRV PRMTR NE::: COMPLD
   /* NETYPE,NESIZE,SFTWR-VRSN,ALM-DLY,N-SW,SW-INIT,
        HLD-TIME:DBCHG: */
   /* PM-FEAT,PM-DATA-LINES,FAIL-TYPE,FAIL-THRES,
        MAN-PROTN ID,REARRANGE */
   "<NETYPE,NESIZE,SFTWR-VRSN,ALM-DLY,N-SW,SW-INIT,
        HLD-TIME:DBCHG:>"
   "<PM-FEAT,PM-DATA-LINES,FAIL-TYPE,FAIL-THRES,
        MAN-PROTN ID,REARRANGE>"
;
```

— If the system responds with the DENY message, check the error code in Appendix C for an explanation.

Performance Monitoring Thresholds

When the system counts a specified number of a specific parameter, it sends a threshold crossing alert using the REPT EVT {EC1|T3} message. This alert means that the threshold level has been met or exceeded. Use the appropriate command form for your signal type. The REPT EVT {EC1|T3} message takes the following form:

```
   <TID #n YY-MM-DD HH:MM:SS>
A  <ASEQ> REPT EVT {EC1|T3}
    /* LOC:CONDTYPE,CONDEFF,,,LOCN,,MONVAL,THLEV,TMPER */
    " <LOC:CONDTYPE,CONDEFF,,,LOCN,,MONVAL,THLEV,TMPER>"
;
```

where

ASEQ = the autonomous report message number

LOC = the port, identified as unit-slot-port. Allowable values for unit are 1 through 4 on a 1024-size system or 1 through 8 on a 2048-size system; slot, 1 through 30; port, 1 through 8.

CONDTYPE = the type of monitored parameter (see Table 5-3)

CONDEFF = the effect of the event on the condition of the network element. TC indicates that the event may initiate a transient condition.

LOCN = (NEND) location of the event (at the DACS III-2000 frame)

MONVAL = the measured value of the monitored parameter

THLEV = the threshold level (for initial values, see Table 5-4)

TMPER = the time period that data was accumulated (1 hour, 1 day).

Table 5-3. Performance Monitoring Parameters

STS-1 Parameters		DS3 Parameters	
CVS:	Coding violation count, section	CVL:	Coding violation count, line
ESS:	Errored second count, section	ESL:	Errored second count, line
SESS:	Severely errored second count, section	SESL:	Severely errored second count, line
UASS:	Unavailable second count, section	UASL:	Unavailable second count, line
ALL:	All counts, section	ALL:	All counts, line

Table 5-4 shows the initial hourly and daily threshold levels for each parameter.

Table 5-4. Initial Performance Monitoring Parameter Threshold

Parameters		Hour	Day
STS-1	DS3		
CVS	CVL	16100	386500
ESS	ESL	40	900
SESS	SESL	20	60
UASS	UASL	30	90
ALL	ALL	—	—

Procedure 5-28. Setting Performance Monitoring Thresholds

1. Set the threshold level by entering the following command (you must have a user community authorization level (UCAL) of 4 for performance monitoring). Refer to Table 5-4 for allowed provisionable threshold values.

   `SET-TH-{EC1|T3}::{EC1P|DS3P}:::MONTYP,THRESH,,,PER;`

   where

   `EC1P|DS3P` = the port, identified as unit-slot-port for {STS1IN|DS3IN}-unit-slot (all ports in a slot) or UNIT-unit (all ports in a unit) or ALL (all ports in the system). Allowable values for unit are 1 through 4 on a 1024-size system or 1 through 8 on a 2048-size system; slot, 1 through 30; port, 1 through 8. All the ports specified in this command must be of the same signal type, or the command will be denied.

   `MONTYP` = the type of parameter to be monitored (see Table 5-3).

   `THRESH` = the new threshold level. (For valid levels, see Table 5-5. Use INIT to specify initial levels, shown in Table 5-4.) The DACS III-2000 system enables you to inhibit `REPT EVT {EC1|T3}` messages for specific ports and monitored value combinations by setting the threshold value to 0.

   `PER` = the accumulation time period for the performance monitoring information.

- If the system responds with the COMPLD message, the command completed successfully.
- If the system responds with the DENY message, check the error code in Appendix C for an explanation.

Table 5-5. Provisionable Performance Monitoring Parameter Thresholds

Parameter STS-1	Parameter DS3	Time Period	Possible Value
CVS	CVL	1-DAY	0-2,147,483,647
		1-HR	0-268,435,455
ESS	ESL	1-DAY	0-65,535
		1-HR	0-3,600
SESS	SESL	1-DAY	0-65,535
		1-HR	0-3,600
UASS	UASL	1-DAY	0-65,535
		1-HR	0-3,600
ALL	ALL	—	—

2. Check the provisioned threshold level for each parameter and for each time period by entering the appropriate command form for your signal type:

   RTRV-TH-{EC1|T3}::{EC1P|DS3P};

   where

   EC1P|DS3P = the port, identified as unit-slot-port, {STS1IN|DS3IN}-unit-slot (all ports in a slot) or UNIT-unit (all ports in a unit) or ALL (all ports in the system). Allowable values for unit are 1 through 4 on a 1024-size system or 1 through 8 on a 2048-size system; slot, 1 through 30; port, 1 through 8.

Bipolar Violation Error Rate Thresholds

You can specify the bipolar violation (BPV) error rate threshold at which the system sends an alarm. When the BPV rate crosses the specified threshold, the system displays a `REPT ALM {EC1|T3}` message and flashes the red alarm LED on the circuit pack terminating the affected signal. The thresholds are 10^{-3}, 10^{-4}, 10^{-5}, 10^{-6}, 10^{-7},10^{-8}, or10^{-9}. The performance monitoring feature does not have to be set to ON for the system to monitor at one of these thresholds.

Procedure 5-29. Setting Bipolar Violation Error Rate Thresholds

1. Set a specific threshold level by entering the appropriate command form for your signal type:

   — For *Message Set 1:*

   `ED-PRMTR-{EC1|T3}::{EC1P|DS3P}::BPV;`

   — For *Message Set 2:*

   `ED-{EC1|T3}::{EC1P|DS3P}::::BERL={value};`

   where

   `EC1P|DS3P` = port, identified as unit-slot-port or DS3IN-unit-slot (all ports in a slot). Allowable values for unit are 1 through 4 on a 1024-size system or 1 through 8 on a 2048-size system; slot, 1 through 30; port, 1 through 8.

   `BPV` = the new bipolar violation error rate threshold. Enter 3 for 10^{-3}, 4 for 10^{-4}, 5 for 10^{-5}, 6 for 10^{-6}, 7 for 10^{-7}, 8 for 10^{-8}, 9 for 10^{-9}.

   `BERL` = the new bipolar violation error rate threshold. Enter 3 for 10^{-3}, 4 for 10^{-4}, 5 for 10^{-5}, 6 for10^{-6}, 7 for 10^{-7}, 8 for 10^{-8}, 9 for 10^{-9}; specified in Message Set 2 as `BERL=`{value}.

   - If the system responds with the `COMPLD` message, the threshold has been set.
   - If the system responds with the `DENY` message, check the error code in Appendix C for an explanation.

Performance Monitoring Use

This section covers:

- scheduling and reporting of performance monitoring counts
- inhibiting reports for specific reports
- allowing reports for specific reports
- canceling reports for specific reports
- canceling reports using an ID number.

Schedule and Report Counts

You can schedule automatic reporting of the performance monitoring data using the procedure that follows.

Procedure 5-30. Scheduling Performance Monitoring Counts

1. Use the appropriate form of the following command, for your signal type, to schedule reports. You must have a user community authorization level (UCAL) of 5 for performance monitoring:

   SCHED-PMREPT-{EC1|T3}::{EC1P|DS3P}:::REPTINT,RST, #REPT,MONTYP,MONLEV,,,PER,TOFF;

   where

EC1P|DS3P	= the port, identified as unit-slot-port or {STS1IN|DS3IN}-unit-slot (all ports in a slot) or UNIT-unit (all ports in a unit) or ALL (all ports in the system). Allowable values for unit are 1 through 4 on a 1024-size system or 1 through 8 on a 2048-size system; slot, 1 through 30; port, 1 through 8.
REPTINT	= the interval between performance monitoring reports ({1 through 24}-HR, {1 through 7}-DAY)
RST	= the starting time for the performance monitoring reporting schedule
#REPT	= the number of reports the schedule is expected to produce. If null, the schedule remains in effect until it is canceled. If 0, the system cancels any performance monitor reports previously scheduled for the specified port(s).
MONTYP	= the type of parameter reported (see Table 5-6)

MONLEV = the monitored level, identified as {0 through x}-UP or {0 through x}-DN specifies the discriminating level for the requested monitored parameter. UP means that monitored parameters with values equal to or greater than the value specified are reported. DN means that monitored parameters with values equal to or less than the value specified are reported. For valid monitored parameter values, see Table 5-6. The default is 1-UP.

PER = the accumulation time period of performance monitoring information (1-HR or 1-DAY)

TOFF = the time offset in DAY-HR-MIN. Specifies the number of time periods in the units given in parameter PER (that is, hours or days) relative to the start time of the current accumulation time period in the same units given in parameter PER.

For example, if it is 6:00 a.m. and you want the system to output a single report for STS-1 signals today at 7:00 a.m. for the previous one-day time period, and you want the report to list the unavailable seconds (UASS) if they are 10 or greater for port 6 of slot 22 in unit 4, you would enter the following command:

```
SCHED-PMREPT-EC1::4-22-6:::1-DAY,7-00,1,
UASS,10-UP,,,1-DAY,1-0-0;
```

If the example was entered correctly, the system would respond with the following:

```
  <TID #n YY-MM-DD HH:MM:SS>
M  SCHED PMREPT EC1::4-22-6:::1-DAY,7-00,1,
   UASS,10-UP,,,1-DAY,1-0-0 COMPLD;
```

Similarly, for DS3 signals, if it is 6:00 a.m. and you want the system to output a single report for today at 7:00 a.m. for the previous one-day time period, and you want the report to list the unavailable seconds (UASL) if they are 10 or greater for port 6 of slot 22 in unit 3, you would enter the following command:

```
SCHED-PMREPT-T3::3-22-6:::1-DAY,7-00,1,
UASL,10-UP,,,1-DAY,1-0-0;
```

If the example was entered correctly, the system would respond with the following:

```
  <TID #n YY-MM-DD HH:MM:SS>
M  SCHED PMREPT T3::3-22-6:::1-DAY,7-00,1,
   UASL,10-UP,,,1-DAY,1-0-0 COMPLD;
```

- If the system responds with the DENY message, check the error code in Appendix C for an explanation.

Table 5-6. Monitored Parameter Values

Parameter STS-1	Parameter DS3	Time Period	Possible Value
CVS	CVL	1-DAY	0-2,147,483,647
		1-HR	0-268,435,455
ESS	ESL	1-DAY	0-65,535
		1-HR	0-3,600
SESS	SESL	1-DAY	0-65,535
		1-HR	0-3,600
UASS	UASL	1-DAY	0-65,535
		1-HR	0-3,600
ALL	ALL	—	—

Inhibit Reports for Specific Ports

The DACS III-2000 system lets you inhibit reports for specific ports scheduled with the SCHED-PMREPT-{EC1|T3} command.

Procedure 5-31. Inhibiting Performance Monitoring Reports

Inhibit the reports by entering the appropriate form of the following command for your signal type. You must have a user community authorization level (UCAL) of 4 to use performance monitoring:

```
INH-PMREPT-{EC1|T3}:[TID]:[{EC1P|DS3P}]:[CTAG];
```

where

TID	= the target identification (optional)
EC1P|DS3P	= the port, identified as unit-slot-port or {STS1IN|DS3IN}-unit-slot (all ports in a slot) or UNIT-unit (all ports in a unit) or ALL (all ports in the system). The default is ALL. Allowable values for unit are 1 through 4 on a 1024-size system or 1 through 8 on a 2048-size system; slot, 1 through 30; port, 1 through 8. All the ports specified in this command must be of the same signal type, or the command will be denied.
CTAG	= the correlation tag (optional).

- If entered correctly, the system responds with the following:

```
  <TID #n YY-MM-DD HH:MM:SS>
M  INH PMREPT {EC1|T3}::<{EC1P|DS3P}:CTAG> COMPLD
;
```

For example, to inhibit scheduled reporting of parameters on EC1 port 6, slot 22 in unit 4, you would enter the following command:

```
INH-PMREPT-EC1::4-22-6;
```

If the example was entered correctly, the system would respond with the following:

```
  <TID #n YY-MM-DD HH:MM:SS>
M  INH PMREPT EC1::4-22-6 COMPLD
```

- If the system responds with the DENY message, check the error code in Appendix C for an explanation.

Allow Reports for Specific Ports

To allow reports to continue on ports that have their reports inhibited, use the following procedure.

Procedure 5-32. Allowing Performance Monitoring Reports

Allow previously inhibited reports by entering the appropriate form of the following command for your signal type. You must have a user community authorization level (UCAL) of 4 for performance monitoring:

ALW-PMREPT-{EC1|T3}:[TID]:{EC1P|DS3P}:[CTAG];

where

TID	= the target identification (optional)
EC1P|DS3P	= the port, identified as unit-slot-port or {STS1IN|DS3IN}-unit-slot (all ports in a slot) or UNIT-unit (all ports in a unit) or ALL (all ports in the system). Allowable values for unit are 1 through 4 on a 1024-size system or 1 through 8 on a 2048-size system; slot, 1 through 30; port, 1 through 8. All the ports specified in this command must be of the same signal type, or the command will be denied.
CTAG	= the correlation tag (optional).

- If entered correctly, the system responds with the following:

```
  <TID #n YY-MM-DD HH:MM:SS>
M  ALW PMREPT {EC1|T3}::{EC1P|DS3P}:CTAG> COMPLD
;
```

For example, to allow reporting to continue on the same EC1 port described in the example in Procedure 5-30, you would enter the following command:

ALW-PMREPT-EC1::4-22-6;

If the example was entered correctly, the system would respond with the following:

```
  <TID #n YY-MM-DD HH:MM:SS>
M  ALW PMREPT EC1::4-22-6 COMPLD
```

- If the system responds with the DENY message, check the error code in Appendix C for an explanation.

Cancel Reports for Specific Ports

You may also cancel all scheduled reports for a port using the procedure that follows.

Procedure 5-33. Canceling Performance Monitoring Reports on Specified Ports

Cancel all reports for a port by entering:

```
SCHED-PMREPT-{EC1|T3}::{EC1P|DS3P}:::,,0;
```

where

{EC1P|DS3P} = the EC1|DS3 port. All the ports specified in this command must be of the same signal type, or the command will be denied.

For example, to cancel the report in the EC1 example shown in Procedure 5-30, you would enter the following command:

```
SCHED-PMREPT-EC1::4-22-6:::,,0;
```

- If entered correctly, the system responds with the following:

```
  <TID #n YY-MM-DD HH:MM:SS>
M  SCHED PMREPT EC1::4-22-6:::,,0; COMPLD
;
```

- If the system responds with the DENY message, check the error code in Appendix C for an explanation.

Cancel Reports Using ID Numbers

When you schedule a report using the SCHED-PMREPT-{EC1|T3} command, the system assigns each scheduled report an ID number. This ID number may prove useful if you already have the maximum number of reports scheduled and you need to schedule another report. You can cancel older, obsolete reports with the CANC-PMSCHED-ID command using this ID number.

Procedure 5-34. Canceling Performance Monitoring Reports Using an ID Number

1. Retrieve the ID number for the specific scheduled report by entering the appropriate command form for your signal type:

   RTRV-PMSCHED-ID:[TID]:SCID:[CTAG];

   where

   TID = the target identification (optional)

   SCID = the scheduled ID (specific ID number 1-64 or ALL)

   CTAG = the correlation tag (optional)

   The system responds with the following message:

```
  <TID #n YY-MM-DD HH:MM:SS>
M  RTRV PMSCHED ID::<SCID> COMPLD
   /* LOC,REPTINVL,REPTDAT,REPTTM,NUMREPT,MONTYPE,
          MONLEV,LOCN,,TMPER,TMOFST */
   "<LOC,REPTINVL,REPTDAT,REPTTM,NUMREPT,MONTYPE,
          MONLEV,LOCN,,TMPER,TMOFST>"
;
```

   where

   LOC = the port, identified as unit-slot-port or {STS1IN|DS3IN}-unit-slot (all ports in a slot) or UNIT-unit (all ports in a unit) or ALL (all ports in the system). Allowable values for unit are 1 through 4 on a 1024-size system or 1 through 8 on a 2048-size system; slot, 1 through 30; port, 1 through 8.

   REPTINVL = the interval between reports ({1 through 7}-DAY, {1 through 24}-HR)

   REPTDAT = the date of the first performance monitoring report for this schedule (mm-dd)

   REPTTM = the starting time of the first performance monitoring report for this schedule (hh-mm)

   NUMREPT = the number of reports {1-24} the schedule is expected to produce

   MONTYPE = the type of parameter to be monitored (see Table 5-6)

MONLEV = the monitored level; identified as {0 through x}-UP or {0 through x}-DN); specifies the discriminating level for the requested monitored parameters.
UP means that monitored parameters with values equal to or greater than the value specified are reported.
DN means that monitored parameters with values equal to or less than the value specified are reported.
For valid monitored parameter values, see Table 5-5. The default is 1-UP.

LOCN = (NEND) monitoring takes place at the DACS III-2000 frame.

TMPER = the accumulation time period (1-HR or 1-DAY)

TMOFST = the time offset in DAY-HR-MIN. Specifies the number of time periods in the units given in parameter TMPER (that is, hours or days) relative to the start time of the current accumulation time period in the same units given in parameter TMPER.

2. After obtaining the ID numbers, cancel unnecessary reports by entering:

```
CANC-PMSCHED-ID:[TID]:SCID:[CTAG];
```

where

TID = the target identification (optional)

SCID = the ID number of report to be canceled (1 through 64 or ALL)

CTAG = the correlation tag (optional)

If entered correctly, the system responds with the following:

```
  <TID #n YY-MM-DD HH:MM:SS>
M  CANC PMSCHED ID::<SCID:CTAG> COMPLD
;
```

- If the system responds with the DENY message, check the error code in Appendix C for an explanation.

Equipment Provisioning

The DACS III-2000 system automatically provisions the input and output interface circuit packs when the unit controllers are restored. After the first unit controller is restored, the system displays an autonomous message for each interface circuit pack in the module, indicating that each circuit pack listed is present (EQPT-PRES). When the second unit controller is restored, the system displays an autonomous message for each interface circuit pack in the module, indicating that each circuit pack listed is active idle (ACT-IDLE).

Interface circuit packs must be grown in increments of 16 signals by adding a pair of input interface circuit packs and a pair of output interface circuit packs. Each pair must contain an odd and even pack, where the odd pack is the lower number. The same input and output pair must be provisioned together. For example, input interface slots 1 and 2 of unit 2 must be grown with output interface slots 1 and 2 of unit 2.

The protection slots are automatically provisioned if the circuit packs are present in the frame.

Manual Provisioning

Equipment entities that are not automatically provisioned must be provisioned manually.

Manual provisioning changes entities from the available absent (AVAIL-ABS) state to the provisioned (PROV) state.

Procedure 5-35. Provisioning I/O Interface Equipment Manually

1. Enter the following command to manually provision equipment entities:

   ENT-EQPT::ELOC::ETYPE;

   where

   ELOC = the equipment location, identified as
   UNIT-{1 through 4} on a 1024-size system or
   UNIT-{1 through 8} on a 2048-size system

   ETYPE = the equipment type, either DS3 to provision the bay for DS3 signals, or STS1 to provision the bay for STS-1 signals. If omitted, the default type (DS3) is used.

   Multiple entities can be specified; see "Multiple Addressing Rules" in Chapter 2 of *DACS III-2000 Commands and Messages.*

- If the system responds with the following message, the entity is provisioned:

```
  <TID #n YY-MM-DD HH:MM:SS>
M  ENT EQPT::<ELOC::ETYPE>: COMPLD
;
```

- If the system responds with the DENY message, find the error code in Appendix C and attempt to re-enter the command, if appropriate.

2. Verify that the equipment is provisioned by entering:

   RTRV-STATE-EQPT::ELOC;

   where

   ELOC = the equipment location specified in Step 1

3. Restore each unit controller by entering:

   RST-EQPT::ELOC;

   where

   ELOC = the location of the unit controller, identified as UC-{1 through 4}-{IN,OUT} on a 1024-size system or UC-{1 through 8}-{IN,OUT} on a 2048-size system

   - If the system responds with the COMPLD message, the restore was successful.
   - If the system responds with the DENY message, check the error code in Appendix C for an explanation.

Facility Provisioning

Facilities are provisioned using the ED-PRMTR-{EC1|T3} command in *Message Set 1* or the ED-{EC1|T3} command in *Message Set 2*. The commands and their parameters follow. Enter the appropriate command form for your signal type.

— For *Message Set 1*:

```
ED-PRMTR-{EC1|T3}:[TID]:{EC1P|DS3P}:[CTAG]:[BPV],
[INST],[TOMD];
```

— For *Message Set 2*:

```
ED-{EC1|T3}:[TID]:{EC1P|DS3P}:[CTAG]:::[BERL],[INST],
[OMODE];
```

where

TID	= the target identification (optional)
EC1P|DS3P	= the port or all of the ports associated with the given entity, identified as unit-slot-port, {STS1IN|DS3IN}-{1 through 4}-{1 through 30} on a 1024-size system or {STS1IN|DS3IN}-{1 through 8}-{1 through 30} on a 2048-size system. Allowable values for unit are 1 through 4 on a 1024-size system or 1 through 8 on a 2048-size system; slot, 1 through 30; port, 1 through 8.
CTAG	= the correlation tag (optional)
BPV	= the bipolar violation rate threshold. Enter 3 for 10^{-3}, 4 for 10^{-4}, 5 for 10^{-5}, 6 for 10^{-6}, 7 for 10^{-7}, 8 for 10^{-8}, 9 for 10^{-9} (optional)
BERL	= the new bipolar violation error rate threshold. Enter 3 for 10^{-3}, 4 for 10^{-4}, 5 for 10^{-5}, 6 for 10^{-6}, 7 for 10^{-7}, 8 for 10^{-8}, 9 for 10^{-9}; specified in Message Set 2 as **BERL**={value} (optional)
INST	= the input status; either DRVN, NDRVN, INIT, or CURVAL; specified in *Message Set 2* as **ISTAT**= {DRVN,NDRVN,INIT,or CURVAL} (optional)
TOMD	= the output mode. Allowable values are NORM, TERM, BAD, AIS, or CURVAL (optional)
OMODE	= the output mode. Allowable values are NORM, TERM, BAD, and AIS, or CURVAL. Specified in *Message Set 2* as **OMODE**={value}.

Fault Isolation Provisioning

The fault isolation feature provides for autonomous protection around faulty service paths. It responds to the detection of a lost valid signal on an output interface circuit pack's channel that supports a cross-connection. The feature validates the reported loss of a valid signal, performs the appropriate protection, if necessary, and reports a failure on the faulty service pack.

You can determine the current state of the fault isolation feature using the **RTRV-SYSOPR-COM;** command. The current state of fault isolation appears as the second output parameter. In the example that follows, fault isolation is set to OFF.

```
  <TID #n YY-MM-DD HH:MM:SS>
M  RTRV-SYSOPR-COM:::<CTAG> COMPLD
   /* ISA-OPR:FLTISO-OPR */
   " ON:OFF"
;
```

The procedure to provision fault isolation follows.

Procedure 5-36. Provisioning Fault Isolation

1. Set the fault isolation feature to either ON or OFF by entering:

   SET-SYSOPR-COM:[TID]::[CTAG]::[FLTISOSTATE];

   where

TID	= the target identification (optional)
CTAG	= the correlation tag (optional)
FLTISOSTATE	= the fault isolation state. Allowed values are ON or OFF. ON indicates that the fault isolation process will be operational. OFF specifies that the system will not report the detection of the lost valid signal from an output interface circuit pack and will not autonomously perform a protection switch. (optional)

2. Check the message.

   - If the system responds with the COMPLD message, the fault isolation feature has been provisioned successfully.
   - If the system responds with the DENY message, check the error code in Appendix C for an explanation.

I/O Bay Provisioning

Once additional I/O bays have been physically installed, they must be provisioned for the signal type (STS-1 or DS3) for which they are equipped. If dual power is provisioned, no STS-1 packs can be provisioned in slots 27 to 30 and the insertion of any non-blank pack in slots 27 to 30 of an STS-1 unit will cause an alarm. If there are any non-blank packs in slots 27 to 30 of an STS-1 unit, provisioning of dual power will be denied.

I/O bays are numbered 1 through 4 on the DACS III 2000, 1024-size system and 1 through 8 on the DACS III 2000, 2048-size system. Figures 5-1 and 5-2 show the numbering scheme. The procedure for provisioning I/O bays follows.

Procedure 5-37. Provisioning I/O Bay(s)

IMPORTANT: Provision one unit at a time.

1. Determine from Figure 5-1 or 5-2 the number of the first unit that you want to provision.

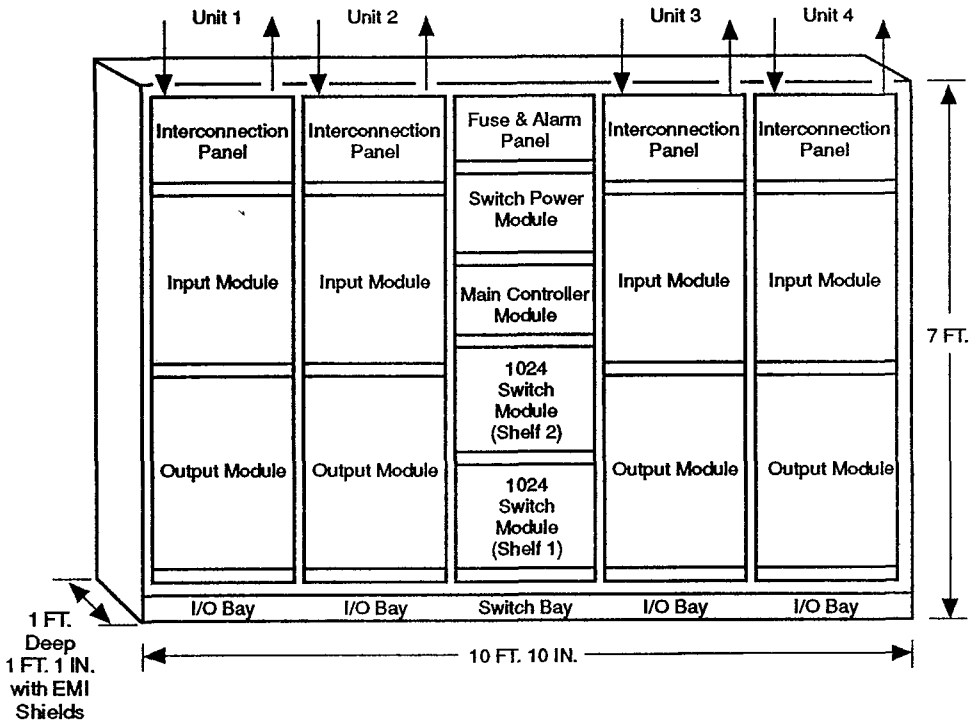

Figure 5-1. DACS III-2000 (1024)—Unit Numbers

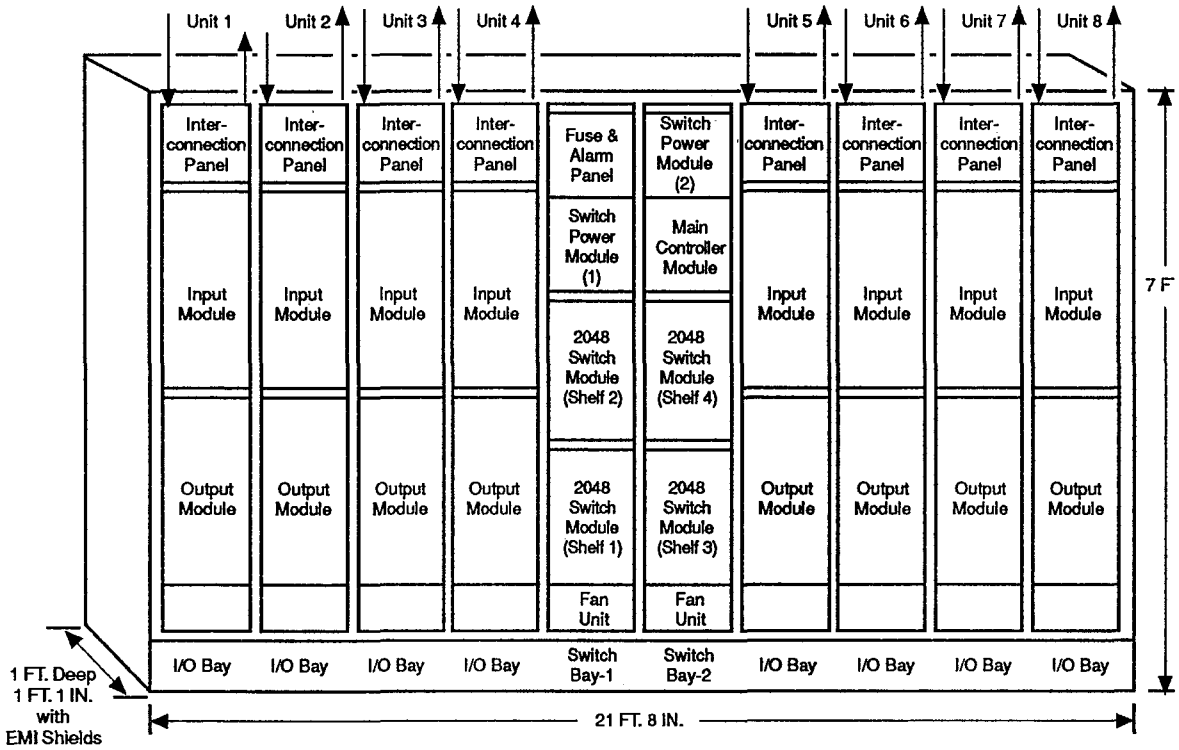

Figure 5-2. DACS III-2000 (2048)—Unit Numbers

2. Provision the unit by entering:

   ENT-EQPT::ELOC::ETYPE;

   where

   ELOC = the equipment location, identified as
   UNIT-{1 through 4} on a 1024-size system or
   UNIT-{1 through 8} on a 2048-size system

   ETYPE = the equipment type, either DS3 to provision the bay for DS3 signals, or STS1 to provision the bay for STS-1 signals. If omitted, the default type (DS3) is used.

The normal response from this command would look like the following example for provisioning UNIT-2 as an STS1 I/O bay:

```
  <TID #n YY-MM-DD HH:MM:SS>
M  ENT EQPT::UNIT-2::STS1 COMPLD
;
```

If the unit is already provisioned, a second attempt of provisioning is denied. To disconnect a unit, use the **DISC-EQPT;** command.

3. Restore the unit controllers.

   a. For the output interface module enter:

   RST-EQPT::ELOC;

   where

   ELOC = the equipment location, identified as
   UC-{1 through 4}-OUT on a 1024-size system or
   UC-{1 through 8}-OUT on a 2048-size system

   The system responds with information on each circuit pack.

   b. For the input interface module enter:

   RST-EQPT::ELOC;

   where

   ELOC = the equipment location, identified as
   UC-{1 through 4}-IN on a 1024-size system or
   UC-{1 through 8}-IN on a 2048-size system

   The system responds with information on each circuit pack.

4. Repeat Steps 1 through 3 for each unit you want to provision. Wait until each unit controller is restored before continuing to the next one.

5. When all units have been provisioned, press the LED/LAMP TEST button on the status panel at the front of the main controller (MC) module. The LEDs should light in the order presented in Table 5-6. The table lists the order for the maximum number of units a DACS III-2000 frame can hold. Your system may have fewer units.

   If a major (MJ) alarm exists on a power unit in an I/O bay, the LED test for that interface module is not run.

Table 5-7. LED Test Sequence

Order	Equipment with Lighted LED
1	Main Controller and Switch Power Module(s)
2	DS3 Switch Module
3	Unit 1* Output Interface Module Input Interface Module
4	Unit 2* Output Interface Module Input Interface Module
5	Unit 3* Output Interface Module Input Interface Module
6	Unit 4* Output Interface Module Input Interface Module
7	Unit 5* Output Interface Module Input Interface Module
8	Unit 6* Output Interface Module Input Interface Module
9	Unit 7* Output Interface Module Input Interface Module
10	Unit 8* Output Interface Module Input Interface Module

*Unit LEDs light only if provisioned.
The following LEDs do *not* light: ACO, disk access, and fan unit alarm LEDs.

- If the LEDs did not light in the order outlined in Table 5-6, an input command in Step 2 or Step 3 was entered incorrectly. Repeat Steps 2 and 3 for the unit whose LED did not light and rerun the LED test described in Step 5.
- If the LEDs did light in the proper order, the equipment is provisioned correctly.

6. To test the ACO green LED you must create an alarm on the frame by extracting an output or input interface pack that is not cross-connected and that is in the active idle (ACT-IDLE) state. Perform the following steps:

   a. Verify that there are no cross-connections the interface pack that you will remove. See Procedure 5-8, "Retrieving One-Way Cross-Connections," and Procedure 5-11, "Retrieving Two-way Cross-Connections," if you need detailed instructions.

   b. Verify that there are no 1x2 (bridge) broadcast or multiple port (conference) connections on the the interface pack that you will remove. See Procedure 5-16, "Retrieving 1x2 (Bridge) Broadcast Cross-Connections," and Procedure 5-21, "Retrieving Multiple Port (Conference) Leg(s)," if you need detailed instructions.

   c. Verify that the state of the interface pack that you will remove is ACT-IDLE, by entering:

      RTRV-STATE-EQPT::ELOC;

      where

      ELOC = the equipment location identified as
      UC-{1 through 4}-OUT on a 1024-size system or
      UC-{1 through 8}-OUT on a 2048-size system.

   d. Create an alarm on the frame by extracting the circuit pack that you verified in Step 6a. Wait until the alarm is declared (up to 20 seconds) and do one of the following:

      - Press the ACO button on the front of the status panel.
      - Enter:

        OPR-ACO-ALL:[TID]::[CTAG];

        where

        TID = the target identification (optional).

        ELOC = the equipment location, identified as
        UC-{1 through 4}-OUT on a 1024-size system or
        UC-{1 through 8}-OUT on a 2048-size system.

        CTAG = the correlation tag (optional).

      — If the green ACO LED lights, the equipment was provisioned correctly.

      — If the green ACO LED does not light, follow the troubleclearing procedures for the MC controller pack, Procedure 9-9, "Clearing INT Condition Type on Main Controller (MC) Module Circuit Packs."

      — If Procedure 9-9 does not rectify the problem, contact your system administrator or the next level of technical support.

   e. When the test is complete, reinsert the extracted circuit pack.

I/O Bay Deprovisioning

There may be instances when you want to remove circuit packs from an I/O bay or even remove an I/O bay entirely from the frame. The procedure to deprovision an I/O bay follows.

Procedure 5-38. Deprovisioning I/O Bay(s)

1. Check that there are no cross-connections on the unit you want to deprovision by entering the appropriate forms of the following three commands for your signal type:

   a. `RTRV-STATE-{EC1|T3}::{EC1P|DS3P}::MAP;`

   where

   `EC1P|DS3P` = the equipment location; identified as UNIT-{1 through 4} on a 1024-size system or UNIT-{1 through 8} on a 2048-size system

   - If the system response indicates that *no* cross-connections exist, continue this procedure at Step 1b.
   - If the system response indicates that cross-connections *do* exist, you need to tell your service organization that service is connected and ask them how to proceed.

   b. `RTRV-STATE-{EC1|T3}::{EC1P|DS3P}::LPBKL;`

   where

   `EC1P|DS3P` = the equipment location; identified as UNIT-{1 through 4} on a 1024-size system or UNIT-{1 through 8} on a 2048-size system

   - If the system response indicates that *no* cross-connections exist, continue this procedure at Step 1c.
   - If the system response indicates that cross-connections *do* exist, you need to tell your service organization that service is connected and ask them how to proceed.

   c. `RTRV-STATE-{EC1|T3}::{EC1P|DS3P}::TP;`

   where

   `EC1P|DS3P` = the equipment location; identified as UNIT-{1 through 4} on a 1024-size system or UNIT-{1 through 8} on a 2048-size system

   - If the system response indicates that *no* cross-connections exist, continue this procedure at Step 2.

- If the system response indicates that cross-connections *do* exist, you need to tell your service organization that service is connected and ask them how to proceed.

2. Disconnect the I/O circuit packs by entering:

   DISC-EQPT:[TID]:ELOC:[CTAG];

   where

   TID = the target identification (optional)

   ELOC = the equipment location, identified as {STS1IN|DS3IN}-{1 through 4}-{1 through 30} or {STS1OUT|DS3OUT}-{1 through 4}-{1 through 30} on a 1024-size system or {STS1IN|DS3IN}-{1 through 8}-{1 through 30} or {STS1OUT|DS3OUT}-{1 through 8}-{1 through 30} on a 2048-size system

   CTAG = the correlation tag (optional)

   - If the system responds with the COMPLD message, no cross-connects are present. The equipment was disconnected.
   - If the system responds with the DENY SNVS message, meaning cross-connects exist, you need to tell your service organization that service is connected and ask them how to proceed.

3. Remove the input and output unit controllers (UC) from service by entering the following command twice, once for the input (IN) UC then once for the output (OUT) UC:

   RMV-EQPT:[TID]:ELOC:[CTAG];

   where

   TID = the target identification (optional)

   ELOC = the equipment location, identified as UC-{1 through 4}-{IN,OUT} on a 1024-size system or UC-{1 through 8}-{IN,OUT} on a 2048-size system

   CTAG = the correlation tag (optional)

   This step causes a major improper removal (**IMPROPRMVL**) alarm for each unit controller.

4. Deprovision the entire unit by entering:

   DISC-EQPT::ELOC;

   where

   ELOC = the unit being deprovisioned, identified as
   UNIT-{1 through 4} on a 1024-size system or
   UNIT-{1 through 8} on a 2048-size system

   The major alarms clear.

   If any ports are mapped, the system responds with the DENY SNVS message, cross-connects exist and you need to tell your service organization that service is connected and ask them how to proceed.

Manual Protection Indicator Provisioning

The manual protection indicator feature, CKTLED ON/OFF, lights the alarm LED on an input INTFC, output INTFC, or SW CTR circuit pack whenever the circuit pack is manually switched to protection.

The procedure to provision the manual protection feature follows.

Procedure 5-39. Setting Manual Protection Indicator Switching

1. Use the **ED-PRMTR-NE** command to set the manual protection indicator feature to either ON or OFF.

   Remember ON causes the alarm LED of each manually-switched-to-protection circuit pack to light.

   Enter the following command as shown:

   ED-PRMTR-NE::::::,,::,:,:MPI;

   where

   MPI = the manual protection indicator. Allowed values are **CKTLED-ON** or **CKTLED-OFF**.

2. Check the message.

   - If the system responds with the COMPLD message, the manual protection indicator has been provisioned successfully.
   - If the system responds with the DENY message, check the error code in Appendix C for an explanation.

Media Validation

Media validation enables you to check system identification, thus preventing the accidental loading of an incorrect optical cartridge onto the system. The feature is particularly useful when restoring a system from a backup optical cartridge.

Media validation information consists of:

- system type (that is, DACS III-2000, 1024-size or DACS III-2000, 2048-size)
- release number
- frame target identifier (if available)
- date and time of last backup
- database status field (INIT, PRESENT, UNKNOWN).

Release 4.0 media validation provides:

- a Data Identification Block (DIB) that is associated with each alternate map and database volume stored on the PRI and SEC storage devices

  The system also maintains a DIB for the database stored in the working (WKG) memory or the SSC3 circuit pack.
- a check to see if an initialized database is being copied to a frame that already has a non-initialized database
- a denial for any copy command from SEC to PRI until the system is validated
- an additional parameter showing the status of the database (INIT, PRESENT, UNKNOWN)
- a check of the date and time stamp of a database to be sure that you are copying the most current backup.

After the system boots from the optical cartridge, you must verify that the correct system optical cartridge has been installed by entering the media validation command (ENT-SYSID) which validates the information booted from SEC of the system.

Once the media validation information is in the system, the system identification is checked each time a procedure is initiated that performs a memory transaction from an optical cartridge. If the identifications are not identical, the transaction is denied.

The procedure for checking the system identification follows.

Procedure 5-40. Checking System Identification

Verify the system identification by entering:

RTRV-SYSID;

The system displays a message showing the optical cartridge identification and all other information about PRI and the system. For example:

```
  <TID #n YY-MM-DD HH:MM:SS>
M  RTRV SYSID::: COMPLD
   /* MEMORY_TYPE,SIGNATURE,SYSTEM_TYPE,SYSTEM_RELEASE,TID,
         STAT,DATE,TIME */
   "  SYS,PROG,DACS III-2000 (2048),Release 4.0,,,,"
   "  WKG,DBASE,DACS III-2000 (2048),Release 4.0,,
         PRESENT,930117,120447 "
   "  PRI,DBASE,DACS III-2000 (2048),Release 4.0,,
         PRESENT,930117,120447 "
   "  PRI,MAPS,DACS III-2000 (2048),Release 4.0,,,
         930126,151828 "
   "  PRI,PROG,DACS III-2000 (2048),Release 4.0,,,,"
   "  SEC,DBASE,DACS III-2000 (2048),Release 4.0,,
         PRESENT,930117,120447 "
   "  SEC,MAPS,UNKNOWN,UNKNOWN,UNKNOWN,,UNKNOWN,UNKNOWN "
   "  SEC,PROG,DACS III-2000 (2048),Release 4.0,,,,"
;
```

If it is not the optical cartridge you want, find the correct system optical cartridge and reboot the system from that optical cartridge. When the reboot is complete, enter the ENT-SYSID command.

Message Set Provisioning

Provisioning a user for one of the message sets is done via the CHG-LGN or CRTE-LGN commands in *Message Set 1*; the ED-SECU-USER command or ENT-SECU-USER
command in *Message Set 2*.

— For *Message Set 1*:

CHG-LGN:[TID]::[CTAG]:OPWD,OID:[NPWD],[NID]:[UPC]:[UTYPE]:MSET;

where

TID = the target identification (optional)

CTAG = the correlation tag (optional)

OPWD = the old password

OID = the old user identification (UID)

NPWD = the new password (optional)

NID = the new user identification (UID) (optional)

UPC = the user privilege code; specified as P{1-5}, M{1-5},T{1-5}, S{1-5}, PM{1-5} (optional)

UTYPE = the user type; specified as **HUMAN**, **MACHINE**, or **CURVAL** (optional)

MSET = the message set; specified as 1, 2, or CURVAL

- If entered correctly, the system responds with the following message:

```
  <TID #n YY-MM-DD HH:MM:SS>
M  CHG LGN:::<CTAG:,OID:,NID:UPC:UTYPE:MSET> COM-
PLD
;
```

Passwords do not appear as part of the output message.

- If entered incorrectly, the system responds with the following message:

```
  <TID #n YY-MM-DD HH:MM:SS>
M  CHG LGN:::<CTAG:,OID:,NID:UPC:UTYPE:MSET> DENY
  <ERCD>
;
```

— For *Message Set 2*:

ED-SECU-USER:[TID]:OID:[CTAG]::[NID],[NPWD],,[UPC]:[UTYPE],MSET;

where

TID = the target identification (optional)

OID = the old user identification (UID)

CTAG = the correlation tag (optional)

NID = the new user identification (UID) (optional)

NPWD = the new password (optional)

UPC = the user privilege code; specified as P{1-5}, M{1-5}, T{1-5}, S{1-5}, PM{1-5} (optional)

UTYPE = the user type; specified as **HUMAN**, **MACHINE** or **CURVAL** (optional)

MSET = the message set; specified as 1, 2, or **CURVAL**

- If entered correctly, the system responds with the following message:

```
  <TID #n YY-MM-DD HH:MM:SS>
M  ED SECU USER::<OID:CTAG::NID,,,UPC:UTYPE,
     MSET> COMPLD
;
```

  Passwords do not appear as part of the output message.

- If entered incorrectly, the system responds with the following message:

```
  <TID #n YY-MM-DD HH:MM:SS>
M  ED SECU USER::<OID:CTAG::NID,,,UPC:UTYPE,
     MSET> DENY
  <ERCD>
;
```

Test Access Auto-Release Provisioning

The test access auto-release feature provides the capability of autonomously disconnecting test access connections associated with a login session. A login session starts when a user logs in and ends when the user logs out, or when the login is autonomously logged out. For example, the system will autonomously log off a user login when it exceeds the link's inactivity time-out.

Two procedures are associated with the test access auto-release feature: establishing a test access cross-connect and changing an existing test access cross-connect setting.

Both procedures follow.

Procedure 5-41. Establishing Test Access Cross-Connects

1. Decide which circuit pack is to be used as the test access port.
2. Determine the cross-connect to be monitored.
3. Decide if the test access is to be associated with a login session.
   - If the test access is to be associated with a login session, establish the test access by entering the appropriate command form for your signal type:

     `CONN-TACC-{STS1|T3}:[TID]:TPRT,FRPT,[TOPT]:[CTAG]:YES;`

     where

     `TID` = the target identification (optional)

     `TPRT` = the port that is used for the test session, identified as unit-slot-port. Allowable values for unit are 1 through 4 on a 1024-size system or 1 through 8 on a 2048-size system; slot, 1 through 30; port, 1 through 8.

     `FRPT` = the FROM input port that is being put under test access, identified as unit-slot-port. Allowable values for unit are 1 through 4 on a 1024-size system or 1 through 8 on a 2048-size system; slot, 1 through 30; port, 1 through 8.

     `TOPT` = the CURRENT TO port for the split test access, identified as unit-slot-port. Allowable values for unit are 1 through 4 on a 1024-size system or 1 through 8 on a 2048-size system; slot, 1 through 30; port, 1 through 8. (optional)

     `CTAG` = the correlation tag (optional).

- If the test access is *not* to be associated with a login session, establish the test access by entering:

  CONN-TACC-{STS1|T3}::TPRT,FRPT,[TOPT]::NO;

  where

  TPRT = the port that is used for the test session; identified by unit-slot-port

  FPRT = the FROM input port that is being put under test access; identified by unit-slot-port

  TOPT = the CURRENT TO port for the split test access; identified by unit-slot-port (optional).

Procedure 5-42. Changing Test Access Auto-Release Setting

1. Retrieve information about test access activity on the system by entering the appropriate command form for your signal type:

   RTRV-TACC-{STS1|T3};

   To change any parameter using the CHG-TACC-{STS1|T3} command, the command must be entered from the same login as the original command.

2. Check the LINK ID field of the message.

```
  <TID #n YY-MM-DD HH:MM:SS>
M  RTRV TACC {STS1|T3}::::ALL COMPLD:
   /* TESTPORT:PORT-STATE,FROM-PORT,CURR-TO-PORT,LINK
      ID,UID,LINK-ASSN,STAGE */
   " <TESTPORT:PORT-STATE,FROM-PORT,CURR-TO-PORT,LINK
      ID,UID,LINK-ASSN,STAGE>"
;
```

   - If LINK-ASSN is NO, meaning test access is disassociated from the login session, and you want to associate it with a login, enter the appropriate command form for your signal type:

     CHG-TACC-{STS1|T3}::TPRT,,::,:YES;

     where

     TPRT = the TESTPORT port, expressed in the format of unit-slot-port.

   - If LINK-ASSN is NO and you do not want to associate it with a login, no command needs to be entered.

   - If LINK-ASSN is YES and you want to disassociate it from the login session, enter the appropriate command form for your signal type:

     CHG-TACC-{STS1|T3}::TPRT,,::,:NO;

where

TPRT = the TESTPORT port, expressed in the format unit-slot-port.

- If `LINK-ASSN` is `YES` and you do not want to disassociate it from the login, no command needs to be entered.

Component Replacement and Equipment Upgrades

6

Contents

Add STS-1 or DS3 Circuit Packs 6-3

Remove STS-1 or DS3 Circuit Packs 6-12

Add and Remove Craft Interface Terminals 6-14

Replace DS3OUT with AISDET Circuit Packs 6-16

Replace AISDET with DS3OUT Circuit Packs 6-19

Change LBO on Traffic-Carrying Output Interface Circuit Packs 6-21

Convert an Input/Output Bay from a DS3 to an STS-1 Signal Type 6-25

Convert an Input/Output Bay from an STS-1 to a DS3 Signal Type 6-36

Component Replacement and Equipment Upgrades

6

This chapter covers changes that can be made by craft to an existing DACS III-2000 frame:

- adding or removing STS-1 or DS3 circuit packs to an in-service frame
- adding or removing craft interface terminals
- replacing DS3OUT interface circuit packs with AISDETs
- converting an input/output bay from one signal type to the other.

Other frame modifications, performed by installers and requiring separate documentation, include:

- loading a software release

  The software upgrade procedure is located under the "Implementation Procedures" chapter of the *DACS III-2000 Software Release Description* (SRD) that came with your new release optical disk. If you cannot find your copy of the SRD, contact your system administrator or the next level of technical support.

- adding new I/O bays

  The process of adding new I/O bays is described in the *DACS III-2000 Installation Procedures Reference Manual Issue (IPRM) 4.0.* IPRM 904A is used with the1024-size system; IPRM 906 is used with the 2048-size system.

- replacing a standard fan unit with the high performance fan unit in a 2048-size system

  The process of replacing a standard fan unit with a high performance fan unit is described in *Engineering Change Procedure, ECP 3-055.*

- replacing single power feed with dual power feed

The process of replacing a single power feed with dual power feed is described in *Engineering Change Procedure, ECP 3-056.*

- replacing existing PRI and SEC with the new secondary storage subsystem

  The process for replacing existing PRI and SEC circuit packs with the new secondary storage subsystem is described in *DACS III-2000, Release 4.0, Software Release Description.*

Procedures performed by craft are described in the rest of this chapter.

Add STS-1 or DS3 Circuit Packs

Use this procedure to add circuit packs of the same signal type to an I/O bay on an in-sevice frame. You cannot use both STS-1 and DS3 circuit packs on the same I/O bay.

When adding interface circuit packs, you need to define what slots are included in a provisioning group. A *provisioning group* consists of four circuit packs: an odd/even pair in the input module and the corresponding odd/even pair in the output module. To define the provisioning group, start with the odd number and take the next higher even number. An example of a provisioning group for a DS3 unit is DS3IN-1-5 and DS3IN-1-6 plus DS3OUT-1-5 and DS3OUT-1-6. An example of a provisioning group for an STS-1 unit is STS1IN-2-29 and STS1IN-2-30, plus STS1OUT-2-29 and STS1OUT-2-30.

If the DACS III-2000 frame is provisioned to use dual power, do not add STS-1 circuit packs in slots 27 through 30 of the STS-1 input or output modules. These slots must be equipped with BUS EXT circuit packs.

The procedure for adding interface circuit packs follows.

Procedure 6-1. Adding Interface Circuit Packs to In-Service Frames

CAUTION:
Electrostatic discharge (ESD) damage.
ESD can cause damage to the components of a DACS III-2000 system.
Wear an ESD wrist strap when working around the frame.

1. Remove any bus extender (BUS EXT) circuit packs, if the slots in the provisioning group have them.

   The system responds with a minor (MN) alarm and an improper removal (IMPROPRMVL) condition type.

2. Install the input interface circuit packs in the working locations defined by the provisioning group; refer to Figure 6-1 for DS3 signals and Figure 6-2 for STS-1 signals. If you need detailed installation instructions, see Procedure 3-1, "Installing Circuit Packs."

   The system responds by clearing the MN alarm and the IMPROPRMVL condition type.

3. Set the line buildout (LBO) on each new output interface circuit pack.

   — For a protection output interface circuit pack, set all jumpers to the OUT position shown in Figure 6-3.

   — For a working output interface circuit pack,

a. Determine the type and length of the cable connected to the output interface circuit pack by referring to the office drawings.

b. Set the LBO to IN or OUT depending on the cable type and length shown in Tables 6-1 and 6-2.

While it may appear that there is a conflict in the tables where the setting can be either IN or OUT, the overlap is there by design. The overlap allows you the flexibility to connect to two different locations with two different cable lengths from the same output interface circuit pack and still maintain the integrity of the jumper settings which must be either all set to IN or all set to OUT. The LBO settings are *per pack*, not *per port*. See Figure 6-3 for the OUT positions, and Figure 6-4 for the IN positions.

4. Install the output interface circuit packs in the locations defined by the provisioning group; see Figure 6-5 for DS3 signals and Figure 6-6 for STS-1 signals. If you need detailed instructions, see Procedure 3-1, "Installing Circuit Packs."

5. Check the state of each of the circuit packs, to see if they are already provisioned in the database, by entering:

```
RTRV-STATE-EQPT::ELOC;
```

where

ELOC = the equipment location; as established by the provisioning group

- If all four circuit packs are in the ACT-IDLE state, they have been provisioned and you are finished with this provisioning group. For additional provisioning groups, repeat this procedure starting at Step 1.
- If any of the circuit packs are in the ABS state, a circuit pack is missing from the provisioning group. Add the circuit pack to the module and repeat Step 5.
- If any of the circuit packs are in the FLT state, you have a bad circuit pack. Replace the circuit pack and repeat Step 5.
- If all circuit packs are in the AVAIL-PRES state, continue this procedure at Step 6.

6. Add each provisioning group to the system database by entering:

```
CRTE-EQPT::ELOC;
```

where

ELOC = the equipment location; any one of the circuit packs in the provisioning group

7. For additional provisioning groups, repeat this procedure starting at Step 1.

Table 6-1. LBO Settings for Connections to DSX-3

Cable Type	Length Limitations	LBO Setting
734A (728B)	0 to 225 ft. >225 to 450 ft.	IN OUT
735A	0 to 125 ft. >125 to 250 ft.	IN OUT
KS-19224,L2	0 to 75 ft. >75 to 150 ft.	IN OUT

Table 6-2. LBO Settings for Connections to Terminal Equipment

Cable Type	Length Limitations	LBO Setting
734A (728B)	0 to 225 ft. >225 ft. to <675 ft. 675 to 900 ft.	IN IN *or* OUT OUT
735A	0 to 125 ft. >125 ft. to <375 ft. 375 to 500 ft.	IN IN *or* OUT OUT
KS-19224,L2	0 to 75 ft. >75 ft. to <225 ft. 225 to 300 ft.	IN IN *or* OUT OUT

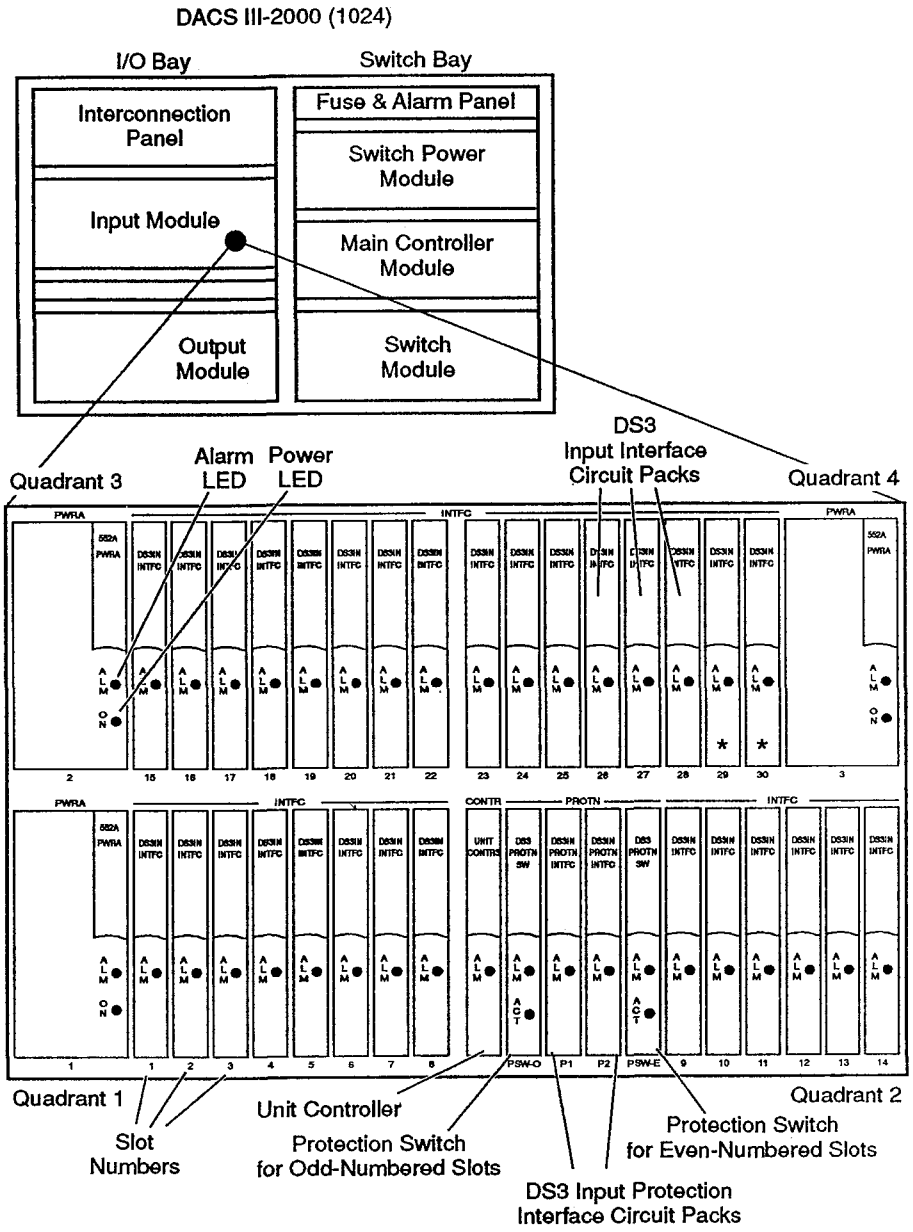

*If slots 29 and 30 of the corresponding DS3 output module contain AISDET circuit packs, then slots 29 and 30 of the DS3 input module will contain bus extender circuit packs.

Figure 6-1. DS3IN Interface Module with Single Power Feed

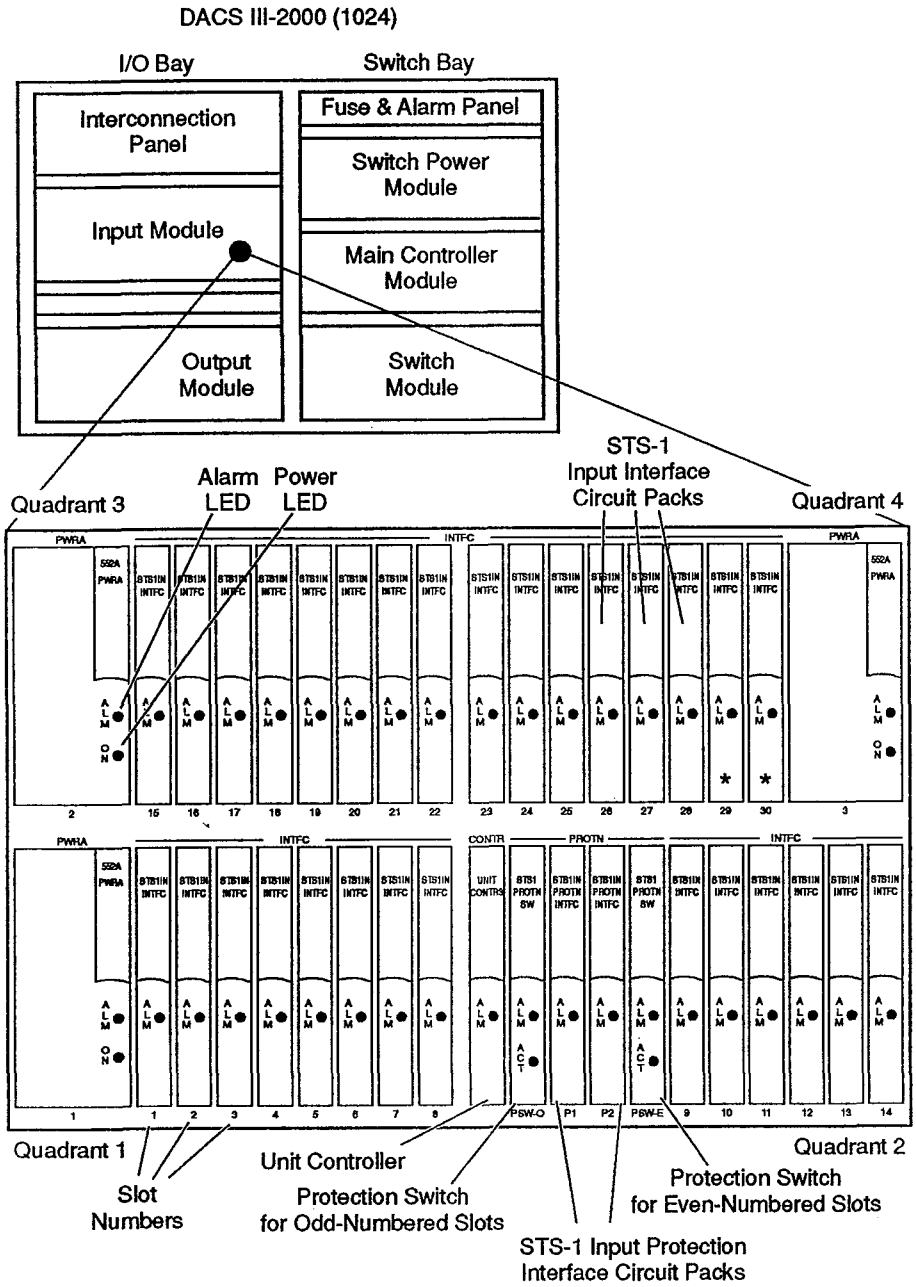

Figure 6-2. STS1IN Interface Module with Single Power Feed

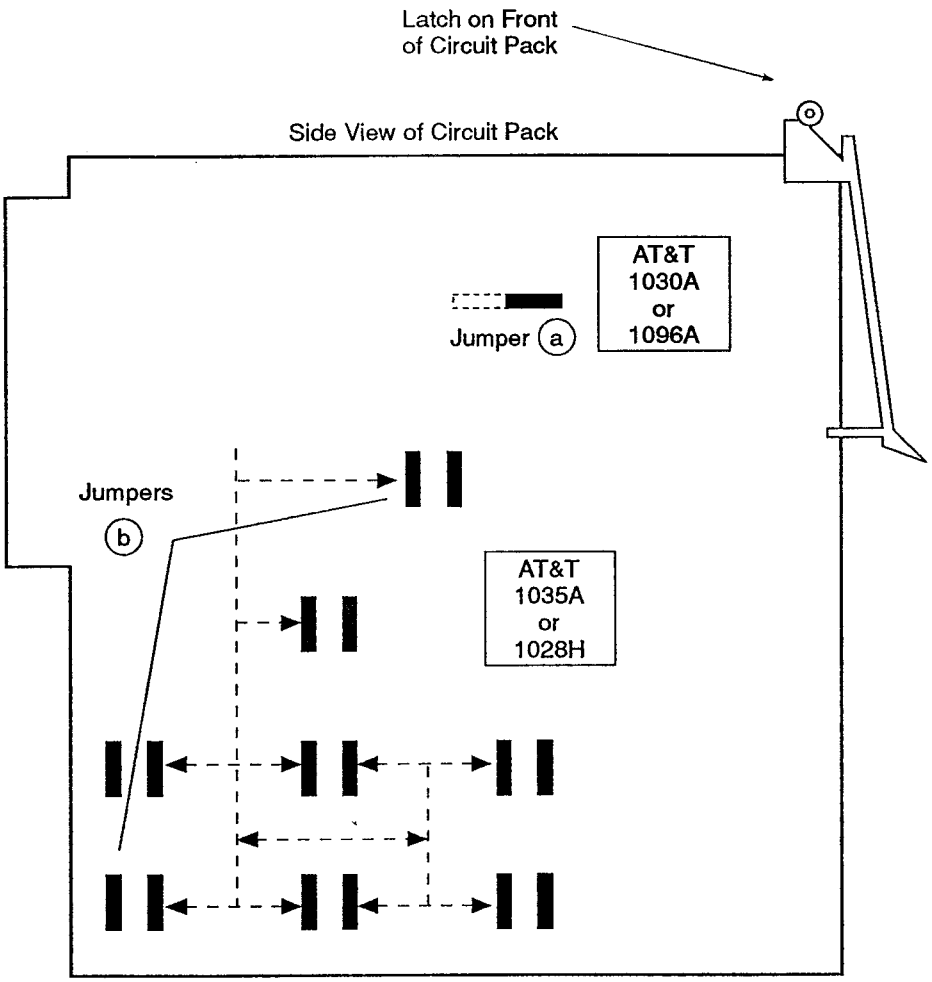

a Jumper must be positioned to the right.

b Sixteen (16) jumpers must be positioned vertically.

Figure 6-3. Line Buildout (LBO) OUT Settings

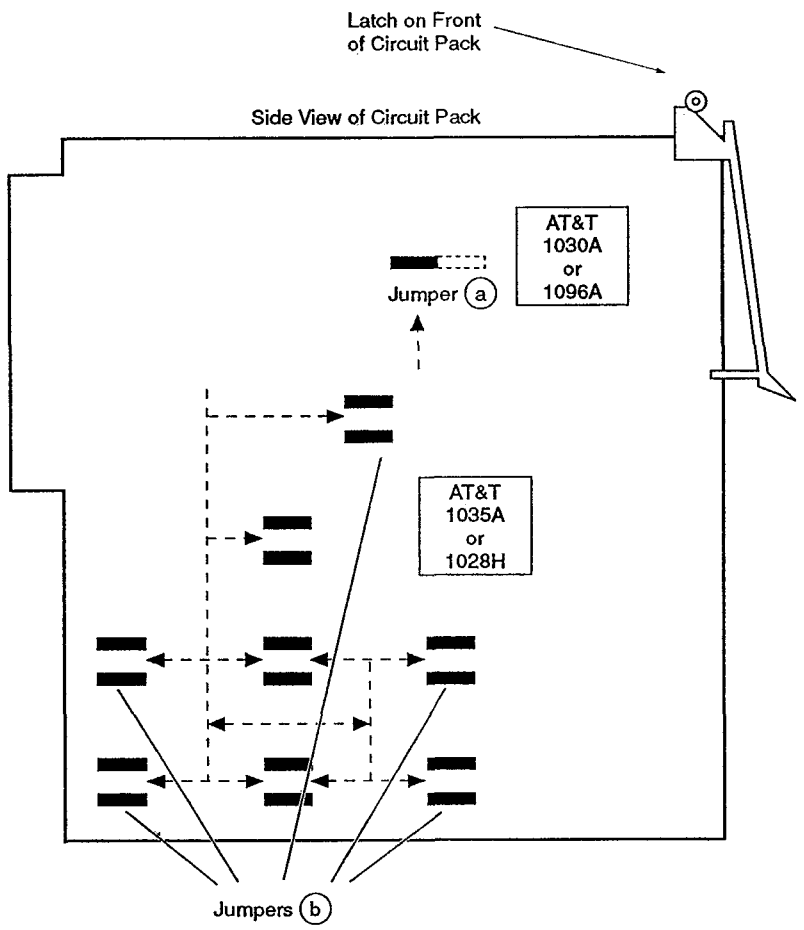

a Jumper must be positioned to the left.

b Sixteen (16) jumpers must be positioned horizontally.

Figure 6-4. Line Buildout (LBO) IN Settings

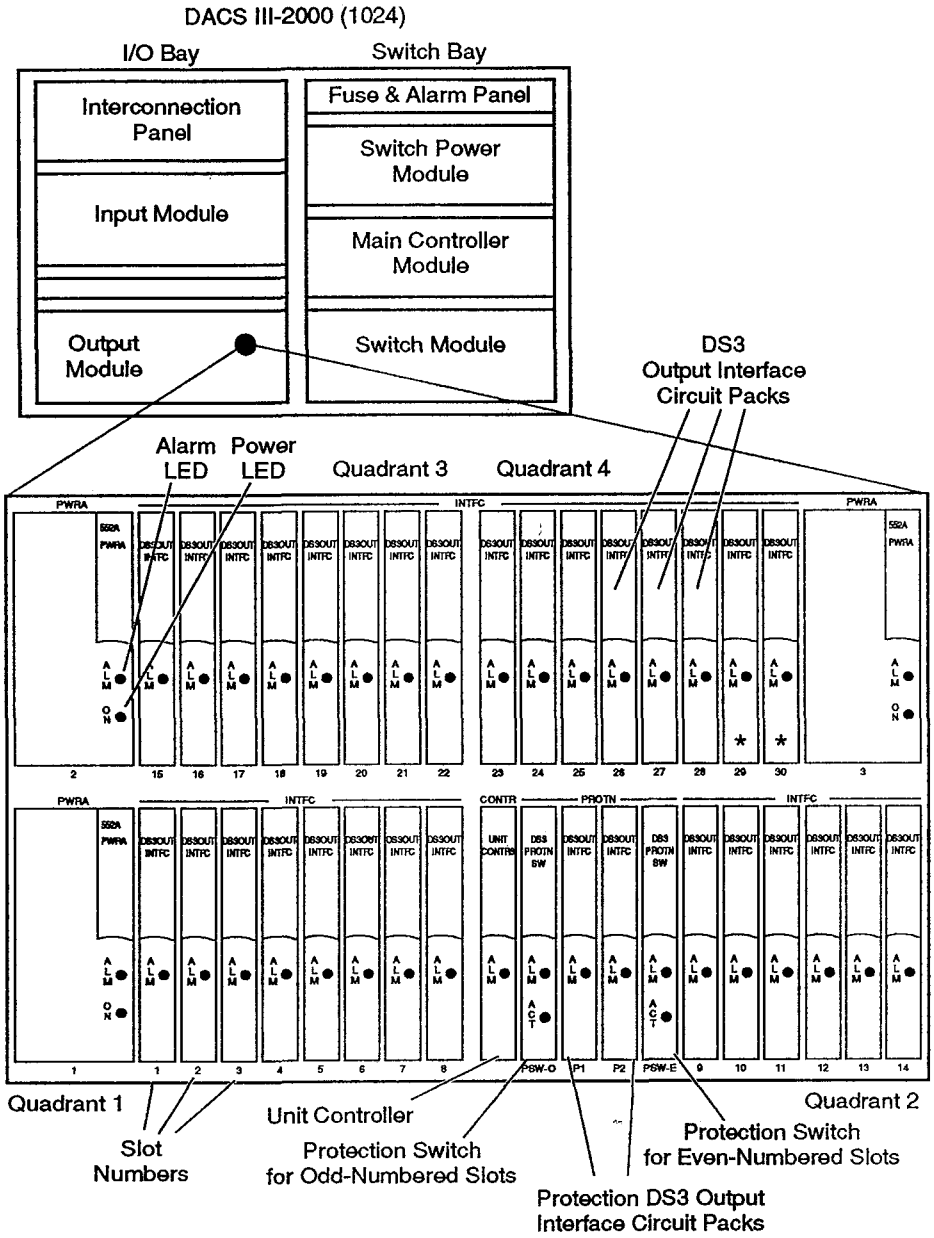

*If the unit is provisioned for the Alarm Indication Signal (AIS) detection feature, slots 29 and 30 will contain AISDET circuit packs. Also, slots 29 and 30 in the DS3 input module will contain bus extender circuit packs.

Figure 6-5. DS3OUT Interface Module with Single Power Feed

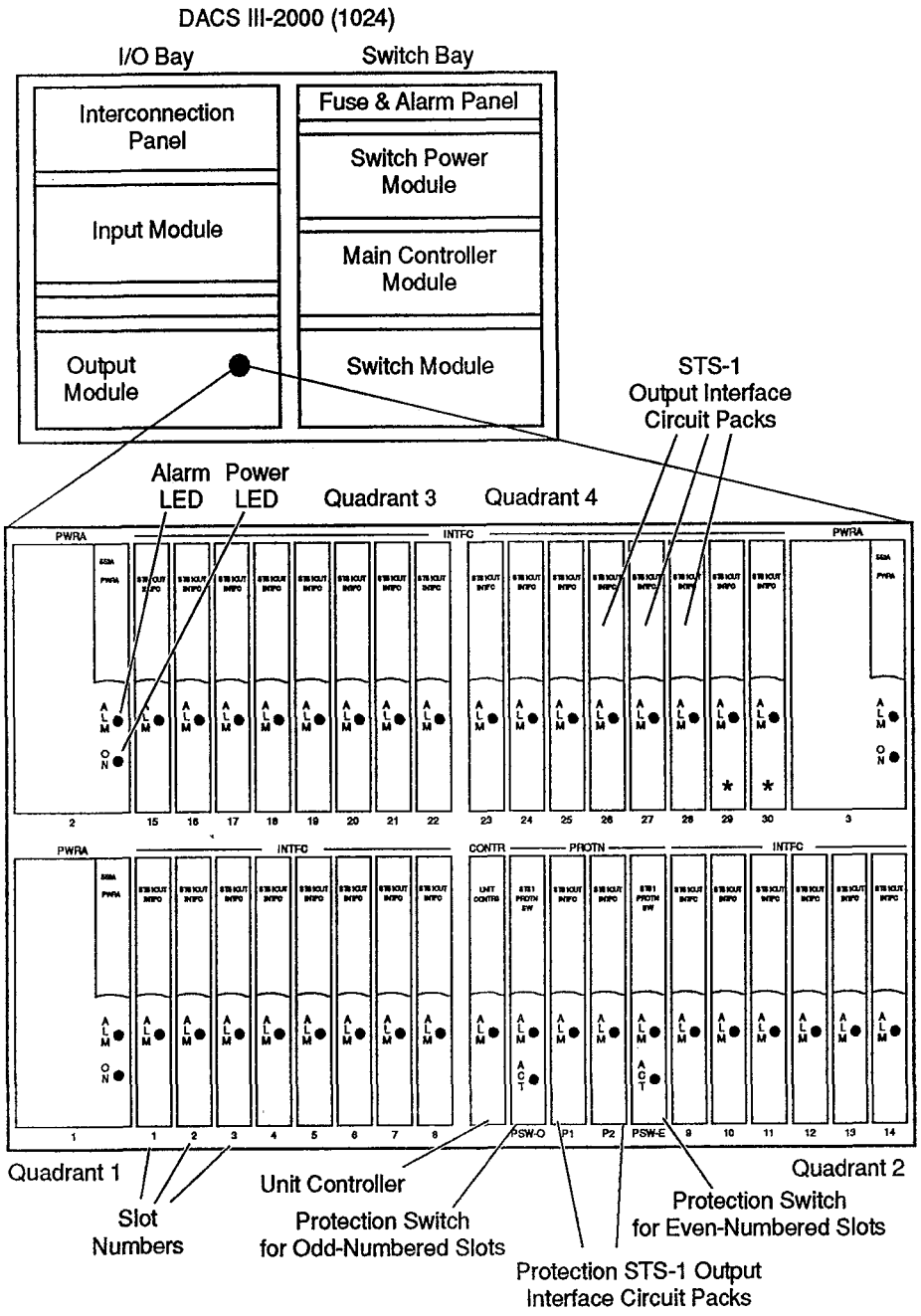

Figure 6-6. STS1OUT Interface Module with Single Power Feed

Remove STS-1 or DS3 Circuit Packs

Input interface and output interface circuit packs must be removed in sets of four: two input circuit packs and two output circuit packs.

Procedure 6-2. Removing Interface Circuit Packs from Service

CAUTION:
Do not use Procedure 6-2 to replace failed circuit packs. Use this procedure only to remove interface circuit packs from service.

CAUTION:
Electrostatic discharge (ESD) damage.
ESD can cause damage to the components of a DACS III-2000 system. Wear an ESD wrist strap when working around the frame.

1. At the interconnection panel, ensure that there are no signal lines terminating on the input or output circuit packs. If the panel has signal lines terminating in these slots, contact your system administrator or the next level of technical support before continuing.
2. Verify that there are no cross-connections on the input or output circuit packs that are going to be removed from service by entering the appropriate command form for your signal type for each of the four circuit packs being removed:
   — For *Message Set 1*

   ```
   RTRV-PRMTR-{EC1|T3}::{EC1P|DS3P};
   ```

   — For *Message Set 2*

   ```
   RTRV-{EC1|T3}::{EC1P|DS3P};
   ```

   where

   `EC1P|DS3P` = the port, identified as {STS1OUT|DS3OUT}-unit-slot. Allowable values for unit are 1 through 4 on a 1024-size system or 1 through 8 on a 2048-size system; slot, 1 through 30.

   The IN-STATE or OUT-STATE value, depending upon your signal type, should show that the pack state is IDLE-REL. If that state is not found, check with your system administrator or the next level of technical support since cross-connections may still be active.

3. Check to see if performance monitoring schedules exist for the input ports or circuit packs, which are to be removed, by entering the appropriate command form for your signal type:

   ```
   RTRV-PMSCHED-{EC1|T3};
   ```

   If no schedules exist you should receive the following "null" response:

   ```
      <TID YY-MM-DD  HH:MM:SS>
   M  RTRV  PMSCHED {EC1P|DS3P}:CTAG> COMPLD
   ;
   ```

   If schedules exist, you will receive the following response:

   ```
      <TID YY-MM-DD  HH:MM:SS>
   M  RTRV  PMSCHED {EC1P|DS3P}:CTAG> COMPLD
      "<LOC:REPTINVL,REPTDAT,REPTIM,NUMREPT,MONTYPE,
        MON LEV,LOCN,,TMPER,TMOFST,INHMODE>"
   ;
   ```

   - If schedules exist, cancel them by entering:

     ```
     SCHED-PMREPT-{EC1|T3}::{EC1P|DS3P}:::,,0;
     ```

     where

     `EC1P|DS3P` = the port or all ports associated with a given entity

4. Deprovision the circuit packs from the database by entering the following command for each circuit pack:

   ```
   DISC-EQPT::ELOC;
   ```

   where

   `ELOC` = the equipment location, identified as UNIT-<unit number>, {STS1IN|DS3IN}-unit-slot, or {STS1OUT|DS3OUT}-unit-slot. Allowable values for unit are 1 through 4 on a 1024-size system or 1 through 8 on a 2048-size system; slot, 1 through 30.

5. Obtain four bus extender (BUS EXT) circuit packs.

6. Physically remove the circuit packs from the frame. If you need detailed instructions, see Procedure 3-2, "Removing Circuit Packs."

   The system responds with a minor (MN) alarm and an improper removal (IMPROPRMVL) condition type.

7. Install a bus extender (BUS EXT) in each empty slot. If you need detailed instructions, see Procedure 3-1, "Installing Circuit Packs."

   The system responds by clearing the MN alarm and the IMPROPRMVL condition type.

Add and Remove Craft Interface Terminals

Procedures for adding and removing craft interface terminals follow; perform the steps in the order presented.

Procedure 6-3. Adding Craft Interface Terminals

CAUTION:
Electrostatic discharge (ESD) damage.
ESD can cause damage to the components of a DACS III-2000 system.
Wear an ESD wrist strap when working around the frame.

1. Connect the new terminal to the AC power outlet and power up the terminal. Verify that the new terminal is set for the following major characteristics remembering that some terminal models do not allow you to set every characteristic listed below. For these terminals, set only the characteristics that apply.
   - full duplex
   - 7 data bits and 1 stop bit
   - even parity
   - flow control (DC1/DC3) set to ON
   - answerback is ^F (control-F) character
2. Determine the number of the unused Snider link to which you want to connect the terminal.

   Snider links terminate at the back of the DACS III-2000 frame on one of the following connectors: TTY1, TTY2, TTY3. The TTY1 connector at the back of the frame and the TTY1 connector on the status panel at the front of the frame are the same link. Never connect two terminals into both TTY1 connectors at the same time.
3. At the back of the frame (or at the status panel), connect the terminal connector to the TTY link selected in Step 2 via an AT&T ED2C646-3O,G2 group 2-connector.
4. On another terminal already connected to the system, enter the following command to determine the speed on the link:

   `RTRV-PRMTR-LINK::CLINK;`

   where

   `CLINK` = the number of the CI link, identified as CILINK-{1 through 6}

If needed, change the terminal speed to match the link speed using the owner's manual provided with the terminal or change the DACS III-2000 link speed to the desired speed by using the `ED-PRMTR-LINK` command.

Procedure 6-4. Removing Craft Interface Terminals

CAUTION:
Electrostatic discharge (ESD) damage.
ESD can cause damage to the components of a DACS III-2000 system. Wear an ESD wrist strap when working around the frame.

1. Verify that the terminal you want to remove does not have an active login. If it does, log off by entering:

   `LGT-USER;`

   at that terminal.

2. Disconnect the terminal from the terminal connector (TTY link on the back of the frame).

3. Disconnect the terminal from the AC power outlet.

4. From another link, enter:

   `RMV-LINK::CLNK;`

   where

   `CLNK` = the number of the CI link to which the terminal is connected, identified as CILINK-{1 through 6}

   The link needs to be removed from service so that output messages are not sent to a TTY line that is not connected to a terminal. This situation could cause problems.

Replace DS3OUT with AISDET Circuit Packs

DS3OUT circuit packs are replaced with AISDET circuit packs whenever you want to use the alarm indication signal (AIS) detection feature.

NOTE:
AIS detection is not currently supported for STS-1 facilities; this procedure only applies to units equipped and provisioned as DS3 units.

The procedure for exchanging the circuit packs follows. After the AISDET circuit packs are in place, the AISDET feature must be provisioned; see Procedure 5-1, "Provisioning Alarm Indication Signal Detection (AISDET)."

Procedure 6-5. Replacing DS3 OUT Interface Circuit Packs with AISDET Circuit Packs

CAUTION:
Electrostatic discharge (ESD) damage.
ESD can cause damage to the components of a DACS III-2000 system.
Wear an ESD wrist strap when working around the frame.

1. Verify that the unit is provisioned as a DS3 unit by entering:

   ```
   RTRV-PRMTR-EQPT::UNIT-{1-8};
   ```

   - If the unit is provisioned as DS3, the system responds with the following message:

     ```
     <TID #n YY-MM-DD  HH:MM:SS>
     M  RTRV  PRMTR EQPT::<ELOC:CTAG> COMPLD
        /* LOC:STATE,DB-CODE NAME,CP-CODE NAME,DB-LBO,
           CP-LBO,ETYPE */
        "<LOC:STATE,DB-CODE NAME,CP-CODE NAME,DB-LBO,
           CP-LBO>,DS3"
     ;
     ```

   - If the ETYPE value is `STS1` instead, the unit is provisioned as STS-1 and you cannot install AISDET circuit packs in it.

2. Obtain two AISDET circuit packs, the associated frame labels, and two BUS EXT circuit packs.

3. At the DS3 interconnection panel, ensure that there are no DS3 signal lines terminating on the DS3IN or DS3OUT circuit packs in slots 29 and 30 of the unit that contains the AISDET circuit packs. If the panel has DS3 signal lines terminating in these slots, contact your system administrator or the next level of technical support before continuing.

4. Verify that there are no cross-connections on the input or output circuit pack that is going to be removed from service. The following command must be executed once for each of the four circuit packs being removed.

   — For *Message Set 1*:

   ```
   RTRV-PRMTR-T3::DS3P;
   ```

   — For *Message Set 2*:

   ```
   RTRV-T3::DS3P;
   ```

   where

   DS3P = the DS3 port, identified as DS3OUT-unit-slot. Allowable values for unit are 1 through 4 on a 1024-size system or 1 through 8 on a 2048-size system; slot, 29 and 30.

   A check of the state of each port on these circuit packs should show the IDLE-REL state. If that state is not found, check with your system administrator or the next level of technical support since cross-connects may still be active.

5. Deprovision slots 29 and 30 of both the DS3IN and DS3OUT modules by entering the following command:

   ```
   DISC-EQPT::DS3OUT-x-29;
   ```

   where

   x = unit that will contain the AISDET circuit packs

   - If the system denies the above command, enter the following:

     ```
     DLT-EQPT::DS3OUT-x-29;
     ```

6. Physically remove each interface circuit pack, one at a time, from both the input and output modules. If you need detailed instructions, see Procedure 3-2, "Removing Circuit Packs."

   The system responds with a minor (MN) alarm and an improper removal (IMPROPRMVL) condition type.

7. Place AISDET frame labels on the frame at slots 29 and 30.

8. Install each AISDET circuit pack in the DS3OUT module, one at a time, then install each BUS EXT circuit pack in the DS3IN module. If you need detailed instructions, see Procedure 3-1, "Installing Circuit Packs."

   The system responds by clearing the MN alarm and the IMPROPRMVL condition type.

9. Enter the following command to provision the new AISDET circuit packs in the database

   CRTE-EQPT::DS3OUT-x-29;

   where

   x = the unit that contains the AISDET circuit packs

10. Provision the AISDET feature following the instructions in Procedure 5-1, "Provisioning Alarm Indication Signal Detection (AISDET)."

Replace AISDET with DS3OUT Circuit Packs

AISDET circuit packs are replaced with DS3OUT circuit packs whenever the alarm indication signal (AIS) detection feature is not being used.

NOTE:
AIS detection is not currently supported for STS-1 facilities; this procedure only applies to units equipped and provisioned as DS3 units.

The procedure for exchanging the circuit packs follows.

Procedure 6-6. Replacing AISDET Circuit Packs with DS3OUT Interface Circuit Packs

CAUTION:
Electrostatic discharge (ESD) damage.
ESD can cause damage to the components of a DACS III-2000 system.
Wear an ESD wrist strap when working around the frame.

1. Obtain two DS3IN interface circuit packs and two DS3OUT interface circuit packs.
2. Deprovision slots 29 and 30 in the DS3OUT interface module containing the AISDET circuit packs by entering the following command:

   `DISC-EQPT::DS3OUT-x-29;`

   where

   `x` = the unit that contains the AISDET circuit packs

   If the system denies the above command, enter the following:

   `DLT-EQPT::DS3OUT-x-29;`
3. Remove each AISDET circuit pack, one at a time, and then remove each corresponding BUS EXT circuit pack in slots 29 and 30 of the DS3IN interface module. If you need detailed instructions, see Procedure 3-2, "Removing Circuit Packs."

   The system responds with a minor (MN) alarm and an improper removal (IMPROPRMVL) condition type.
4. Remove AISDET labels from the frame at slots 29 and 30.
5. On the DS3OUT interface circuit packs, set the line buildout (LBO) as described in Procedure 3-6, "Setting Line Buildout (LBO)."

6. Install each DS3IN interface circuit pack in the DS3IN module, one at a time, then install each DS3OUT interface circuit pack in the DS3OUT module. If you need detailed instructions, see Procedure 3-1, "Installing Circuit Packs."

   The system responds by clearing the MN alarm and the IMPROPRMVL condition type.

7. Enter the following command to provision the new interface circuit packs in the database

   ```
   CRTE-EQPT::DS3OUT-x-29;
   ```

   where

   x = the unit that contains the new interface circuit packs

8. Enter the following command to check the connections between the DS3OUT interface circuit packs and the center stage switch

   ```
   TEST-CABLE::DS3OUT-x-29&-30;
   ```

   where

   x = the unit that contains the new interface circuit packs

   Then, enter the following command to check the connections between the DS3IN interface circuit packs and the center stage switch

   ```
   TEST-CABLE::DS3IN-x-29&-30;
   ```

   where

   x = the unit containing the new interface circuit packs.

   - If the system responds with PASS, the replacement has been successful.
   - If the system responds with FAIL, there is a problem with the connections between the circuit pack(s) and the center stage switch. Refer the problem to your system administrator or the next level of technical support.

Change LBO on Traffic-Carrying Output Interface Circuit Packs

You may need to change the line buildout (LBO) settings when you change the type or length of a cable connected to an output interface circuit pack, or to otherwise match the LBO settings to your installation.

Procedure 6-7. Changing Line Buildout (LBO) Settings on an Output Interface Circuit Pack Carrying Traffic

CAUTION:
Service interruption.
Failure to follow the procedure in the exact order as written affects traffic on the frame. Do not pull any output interface circuit pack from its slot without first switching it to protection.

CAUTION:
Electrostatic discharge (ESD) damage.
ESD can cause damage to the components of a DACS III-2000 system. Wear an ESD wrist strap when working around the frame.

1. Use Procedure 9-1, "How to Clear Alarms," to determine if any alarms are present and to clear them before continuing. Any alarms on output interface circuit packs with a condition type of `INT`, `BADLBO`, or `INHSWWKG` *must* be cleared before you continue.
2. Determine the current LBO setting for the output interface circuit pack whose LBO you want to change; enter:

   `RTRV-PRMTR-EQPT::ELOC;`

   where

   `ELOC` = output interface circuit pack for which you have changed the cable or want to change the LBO

- If the system responds with the COMPLD message, record the database provisioned LBO value (**DB-LBO**) and the circuit pack LBO value (**CP-LBO**).

```
   <TID #n YY-MM-DD HH:MM:SS>
M RTRV PRMTR EQPT::<ELOC:CTAG> COMPLD
  /* LOC:STATE,DB-CODE NAME,CP-CODE NAME,DB-LBO,
     CP-LBO */
  " <LOC:STATE,DB-CODE NAME,CP-CODE NAME,DB-LBO,
     CP-LBO> "
;
```

- If the system responds with the DENY message, call your system administrator or next level of technical support.

3. Use Tables 6-1 and 6-2, earlier in this chapter, to determine the required LBO setting for the output interface circuit pack.

   The overlap between the IN and OUT settings shown in the tables allows you to connect to two locations with two different cable lengths from the same output interface circuit pack, while keeping all jumper settings on the circuit pack either IN or OUT. All jumpers must be either horizontal (IN) or vertical (OUT), not a combination. The LBO settings are *per pack*, not *per port*.

   - If the DB-LBO and CP-LBO parameter values match the setting determined by the tables, the output interface circuit pack already has the correct LBO setting. You do not need to change it, and are finished with this procedure.
   - If the DB-LBO and CP-LBO parameter values do not match the setting, you need to change the LBO setting. Continue this procedure at the next step.

4. Identify and record the equipment location of the output interface circuit pack for which you are changing the LBO. Use the format "{STS1OUT|DS3OUT}-{1 through 8}-{1 through 30}."

5. Switch the circuit pack identified in Step 4 to protection by entering:

   SW-TOPROTN-EQPT::ELOC::;

   where

   ELOC = the output interface circuit pack needing the LBO change

   - If the system responds with the COMPLD message along with MN, INHSWWKG alarms for the specified output interface circuit pack and its mate, continue this procedure at Step 6. A momentary interruption of service may occur.
   - If the system responds with the DENY message, call your system administrator or next level of technical support.

6. Remove the output interface circuit pack from its slot. A momentary interruption of service may occur. If you need detailed instructions, see Procedure 3-2, "Removing Circuit Packs".
7. Change the LBO jumpers using Figure 6-3 or 6-4 shown earlier in this chapter as a reference. Figure 6-3 shows the LBO OUT settings; Figure 6-4 shows the LBO IN settings. There are 17 LBO jumpers that need to be changed:
   - two LBO jumpers for each of the eight ports
   - one LBO jumper used by the software to identify the LBO setting of the circuit pack
8. Return the output interface circuit pack to its slot. If you need detailed instructions, see Procedure 3-1, "Installing Circuit Packs". A momentary interruption of service may occur.

   A MN, BADLBO alarm will be declared.
9. Check to see that the circuit pack's red alarm LED is lighted.
   - If the red alarm LED is lighted, continue this procedure at Step 10.
   - If the red alarm LED is *not* lighted, call your system administrator or next level of technical support.
10. Update the software database so that the new circuit pack setting and the database setting are identical, by entering:

    ED-PRMTR-EQPT::ELOC::,INIT;

    where

    ELOC = the output interface circuit pack identified in Step 4
    - If the system responds with the COMPLD message, the circuit pack's red alarm LED should no longer be lighted. Continue this procedure at Step 11.
    - If the red alarm LED remains lighted, call your system administrator or next level of technical support.
    - If the system responds with the DENY message, call your system administrator or next level of technical support.
11. Switch the output interface circuit pack off protection, by entering:

    ALW-SW-EQPT::ELOC::WKG;

    where

    ELOC = the output interface circuit pack identified in Step 4.

    The system responds by clearing the INHSWWKG alarm for the circuit pack and its mate. Also, REPT SW EQPT messages will be seen for these circuit packs.

- If the system responds with the COMPLD message, continue this procedure at Step 12.
- If the system responds with the DENY message, call your system administrator or next level of technical support.

12. Retrieve the new LBO setting by entering:

RTRV-PRMTR-EQPT::ELOC;

where

ELOC = output interface circuit pack identified in Step 4

- If the system responds with the COMPLD message,

```
  <TID YY-MM-DD HH:MM:SS>
M  RTRV PRMTR EQPT::<ELOC:CTAG> COMPLD
   /* LOC:STATE,DB-CODE NAME,CP-CODE
      NAME,DB-LBO,CP-LBO */
   " <LOC:STATE,DB-CODE NAME,CP-CODE
      NAME,DB-LBO,CP-LBO> "
;
```

  verify that the database provisioned LBO value (DB-LBO) and the circuit pack LBO value (CP-LBO) are the same, and that they are both the correct, new value, determined in Step 3.

  — If the DB-LBO and CP-LBO values are correct, you have successfully completed this procedure.

  — If the DB-LBO and CP-LBO values are *not* correct, call your system administrator or next level of technical support.

- If the system responds with the DENY message, call your system administrator or next level of technical support.

Convert an Input/Output Bay from a DS3 to an STS-1 Signal Type

Use this procedure to convert a provisioned DS3 I/O bay to an STS-1 I/O bay. Note the following:

- You cannot mix signal types within a bay.
- During this procedure, office alarms will be generated. Call your system administrator, or the next level of technical support to determine if you should silence the office alarms generated by this procedure.
- If any alarms are generated during this process, see Chapter 9, "Trouble-clearing—General" of this document for information on how to clear them.

Procedure 6-8. Converting a DS3 I/O Bay to an STS-1 I/O Bay

CAUTION:
Electrostatic discharge (ESD) damage.
ESD can cause damage to the components of a DACS III-2000 system. Wear an ESD wrist strap when working around the frame.

1. Before you begin, ensure that the following prerequistes have been met.
   - Read the entire procedure before beginning.
   - Convert only one bay at a time, and ensure that you are converting the correct bay.
   - Verify that the printer is in working order and there is an ample supply of paper.
   - Refer to your work order and ensure that you have sufficient anti-static bags for the DS3 and AIS detection circuit packs that you will remove from the bay.
   - Refer to your work order and ensure that you have sufficient STS1 circuit packs to convert the bay: ARW11, ARW12, ARW13, ARW16, and at least one spare of each STS1 circuit pack.
   - Refer to your work order and ensure that you have sufficient BUS EXT circuit packs to populate the unequipped slots in the bay you are converting.

- Verify that you are running Release 4.0 by entering the following command and checking the system release field:

  RTRV-SYSID:[TID]::[CTAG];

  where

  TID = the target identification (optional).

  CTAG = the correlation tag (optional).

  The normal system response should be:

```
  <TID n# YY-MM-DD HH:MM:SS>
M  RTRV SYSID::::<CTAG> COMPLD
   "SYS,PROG,<SYSTEM_TYPE,SYSTEM_RELEASE>,,,,"
   "PRI,PROG,<SYSTEM_TYPE,SYSTEM_RELEASE>,,,,"
   "SEC,PROG,<SYSTEM_TYPE,SYSTEM_RELEASE>,,,,"
   "WKG,DBASE,<SYSTEM_TYPE,SYSTEM_RELEASE,TID,
        STAT,DATE,TIME>"
   "PRI,DBASE,<SYSTEM_TYPE,SYSTEM_RELEASE,TID,
        STAT,DATE,TIME>"
   "SEC,DBASE,<SYSTEM_TYPE,SYSTEM_RELEASE,TID,
        STAT,DATE,TIME>"
   "PRI,MAPS,<SYSTEM_TYPE,SYSTEM_RELEASE,TID>,,
        <DATE,TIME>"
   "SEC,MAPS,<SYSTEM_TYPE,SYSTEM_RELEASE,TID>,,
        <DATE,TIME>
;
```

  If the system responds with the DENY message, check the error code in Appendix C for an explanation. Call your system administrator or the next level of technical support for assistance, if necessary.

- Verify that no alarms exist on the system by entering:

  RTRV-ALM-ALL;

  — If there are no alarms, the system responds with the following message:

```
  <TID n# YY-MM-DD HH:MM:SS>
M RTRV ALM ALL::<ELOC:CTAG:NOCD,COTY,SRV>
  COMPLD
;
```

— If there *are* alarms, the system responds with the following message:

```
  <TID n# YY-MM-DD HH:MM:SS>
M RTRV ALM ALL::<ELOC:CTAG:NOCD,COTY,SRV>
   COMPLD
 /* LOC:NTFCNDE,CONDTYPE,SRVEFF */
  "<LOC:NTFCNDE,CONDTYPE,SRVEFF>"
;
```

where

NTFCNCDE = the notification code: CR, indicates a critical alarm; MJ a major alarm; MN, a minor alarm.

— If alarms exist, clear the alarms before proceeding. See Procedure 9-1, "How to Clear Alarms."

- Copy the database from PRI to SEC. If you need detailed information on this command, see Procedure 8-3, "Making Backups to Optical Cartridges."

  If you do *not* have alternate maps, enter the command:

  CPY-MEM:::PRI,SEC,DBASE;

  If you have alternate maps, enter the command:

  CPY-MEM:::PRI,SEC,BOTH;

  — If the system responds with the COMPLD message, the copy completed successfully.

  — If the system responds with the DENY message, check the error code in Appendix C for an explanation. Call your system administrator or the next level of technical support for assistance, if necessary.

2. Verify that no cross-connections exist for the unit that is going to be converted by entering the following commands for each unit being converted:

   - Retrieve the one and two-way cross-connections for the unit by entering the appropriate command:

     — For *Message Set 1:*

     RTRV-DSX-T3:[TID]:ELOC:[CTAG];

     — For *Message Set 2:*

     RTRV-CRS-T3:[TID]:DS3P:[CTAG];

where

TID = the target identification (optional).

DS3P = the equipment location, identified as
UNIT-{1 through 4} on a 1024-size system or
UNIT-{1 through 8} on a 2048-size system.

ELOC = the equipment location, identified as
UNIT-{1 through 4} on a 1024-size system or
UNIT-{1 through 8} on a 2048-size system.

CTAG = the correlation tag used to associate a command with an output response.

— If the system responds with the COMPLD message, the retrieval was completed successfully.

— If cross-connections exist, take them down using Procedure 5-9, "Disconnecting One-Way Cross-Connections," and Procedure 5-12, "Disconnecting Two-Way Cross-Connections." Repeat the RTRV-DSX-T3 or the RTRV-CRS-T3 command to verify that the cross-connections have been taken down.

— If the system responds with the DENY message, check the error code in Appendix C for an explanation. Call your system administrator or the next level of technical support for assistance, if necessary.

- Retrieve 1x2 (bridge) broadcast connections for the unit by entering the command:

```
RTRV-BDCST-T3:[TID]:DS3P:[CTAG];
```

where

TID = the target identification (optional).

DS3P = the equipment location, identified as
UNIT-{1 through 4} on a 1024-size system or
UNIT-{1 through 8} on a 2048-size system.

CTAG = the correlation tag (optional).

— If the system responds with the COMPLD message, the retrieval was successful.

— If cross-connections exist, take them down using Procedure 5-17, "Disconnecting 1x2 (Bridge) Broadcast Cross-Connections." Repeat the RTRV-BDCST-T3 command to verify that the broadcast connections have been taken down.

— If the system responds with the DENY message, check the error code in Appendix C for an explanation. Call your system administrator or the next level of technical support for assistance, if necessary.

- Retrieve the multiple port (conference) broadcast information for the unit being converted by entering the command:

  RTRV-CONF-T3:[TID]:DS3P:[CTAG];

  where

  TID = the target identification (optional).

  DS3P = the equipment location, identified as UNIT-{1 through 4} on a 1024-size system or UNIT-{1 through 8} on a 2048-size system.

  CTAG = the correlation tag (optional).

  — If the system responds with the COMPLD message, the retrieval of conference information completed successfully.

  — If multiple port connections exist, take them down using Procedure 5-22, "Deleting Multiple Port (Conference) Broadcast Leg(s)." Repeat the **RTRV-CONF-T3** command to verify that the conference connections have been taken down.

  — If the system responds with the DENY message, check the error code in Appendix C for an explanation. Call your system administrator or the next level of technical support for assistance, if necessary.

3. Check to see if performance monitoring schedules exist for the input ports in the unit to be converted by entering the command:

   RTRV-PMSCHED-T3:[TID]:DS3P:[CTAG];

   where

   TID = the target identification (optional).

   DS3P = the equipment location, identified as UNIT-{1 through 4} on a 1024-size system or UNIT-{1 through 8} on a 2048-size system.

   CTAG = the correlation tag (optional).

   — If no schedules exist you should receive the following "null" response:

```
   <TID n# YY-MM-DD  HH:MM:SS>
M RTRV PMSCHED T3::<DS3P:CTAG> COMPLD
;
```

— If schedules exist, you will receive the following response:

```
   <TID n# YY-MM-DD  HH:MM:SS>
M  RTRV  PMSCHED T3::<DS3P:CTAG> COMPLD
   /* LOC:REPTINVL,REPTDAT,REPTIM,NUMREPT,MONTYPE,
     MONLEV,LOCN,,TMPER,TMOFST,INH MODE */
   "<LOC:REPTINVL,REPTDAT,REPTIM,NUMREPT,MONTYPE,
     MONLEV,LOCN,,TMPER,TMOFST,INH MODE>"
;
```

— If schedules exist, cancel them by entering:

SCHED-PMREPT-T3:[TID]:DS3P:[CTAG];

where

TID = the target identification (optional).

DS3P = the equipment location, identified as UNIT-{1 through 4} on a 1024-size system or UNIT-{1 through 8} on a 2048-size system.

CTAG = the correlation tag (optional)

Repeat the **RTRV-PMSCHED-T3** command to verify that the schedules have been canceled.

— If the system responds with the DENY message, check the error code in Appendix C for an explanation. Call your system administrator or the next level of technical support for assistance, if necessary

4. Deprovision the circuit packs by entering the following command for each circuit pack in the unit to be converted:

DISC-EQPT:[TID]:ELOC:[CTAG];

where

TID = the target identification (optional).

ELOC = the equipment location of all provisioned interface circuit packs in the unit, identified as DS3IN-unit-slot, or DS3OUT-unit-slot. Allowable values for unit are 1 through 4 on a 1024-size system or 1 through 8 on a 2048-size system. Allowable values for slot are 1through 30.

CTAG = the correlation tag (optional)

— If the system responds with the COMPLD message, the deprovisioning of the circuit packs was completed successfully.

— If the system responds with the DENY message, check the error code in Appendix C for an explanation. Call your system administrator or the next level of technical support for assistance, if necessary. If you receive the SNVS error code, then cross-connects still exist on the bay. Return to Step 2.

5. Remove the unit controllers from service.

- Enter the following command to remove the input unit controller from service for the unit being converted. The red UC LED will light.

  RMV-EQPT:[TID]:ELOC:[CTAG];

  where

  TID = the target identification (optional).

  ELOC = the input unit controller of the bay being converted. Allowable values for unit are UC-{1 through 4}-IN on a 1024-size system or UC-{1 through 8}-IN on a 2048-size system.

  CTAG = the correlation tag (optional).

  — If the system responds with the COMPLD message, the input unit controller was removed from service successfully.

  — If the system responds with the DENY message, check the error code in Appendix C for an explanation. Call your system administrator or the next level of technical support for assistance, if necessary.

- Enter the following command to remove the output unit controller from service for the unit being converted. The red UC LED will light.

  RMV-EQPT:[TID]:ELOC:[CTAG];

  where

  TID = the target identification (optional).

  ELOC = the output unit controller of the bay being converted. Allowable values for unit are UC-{1 through 4}-OUT on a 1024-size system or UC-{1 through 8}-OUT on a 2048-size system.

  CTAG = the correlation tag (optional)

  — If the system responds with the COMPLD message, the output unit controller was removed from service successfully.

— If the system responds with the DENY message, check the error code in Appendix C for an explanation. Call your system administrator or the next level of technical support for assistance, if necessary.

6. Disconnect the unit being converted by entering the following command:

   DISC-EQPT:[TID]:ELOC:[CTAG];

   where

   TID = the target identification (optional).

   ELOC = the unit being converted, identified as UNIT-{1 through 4} on a 1024-size system or UNIT-{1 through 8} on a 2048-size system.

   CTAG = the correlation tag (optional).

   — If the system responds with the COMPLD message, the unit was disconnected successfully.

   — If the system responds with the DENY message, check the error code in Appendix C for an explanation. Call your system administrator or the next level of technical support for assistance, if necessary.

7. Check to see if your frame is equipped with 566A power packs supporting the dual power feed option.

   - If you do *not* have the dual power feed option, proceed to Step 8.
   - If you *have* dual power feeds, note that DACS III-2000 systems provisioned for dual power feeds cannot support STS-1 circuit packs in slots 27 through 30.

     — Extract any ARW1 and ARW2 interface packs from slots 27 through 30 of both the input and output modules of the bay being converted. If you need detailed instructions, refer to Procedure 3-2 (Removing Circuit Packs).

     — Insert BUS EXT circuit packs into any empty slots in the input and output modules of the bay being converted.

8. Physically extract all DS3 interface and protection circuit packs in the bay being converted and insert the STS-1 packs in the following order.

   - Extract the ARW3 circuit packs and place in anti-static bags. Insert the ARW13 circuit packs in the slots previously occupied by the ARW3s.
   - Extract the ARW6 circuit packs and place in anti-static bags. Insert the ARW16 circuit packs in the slots previously occupied by the ARW6s.

- Extract the ARW1 circuit packs and place in anti-static bags. Insert the ARW11 circuit packs into the input interface slots, as specified in your work order. Replace the packs in pairs. DACS III-2000 systems provisioned with dual power feeds cannot support STS-1 circuit packs in slots 27 through 30. Insert BUS EXT circuit packs in the empty input interface slots.
- Extract the ARW8 circuit packs from slots 29 and 30 of the output module of the unit being converted, if the unit was equipped for the alarm indication signal detection (AISDET) feature (DS3 circuit packs only). Remove the AISDET label from slots 29 and 30.
- Extract the ARW2 circuit packs from the output interface slots and place in anti-static bags.
  - Adjust the LBO setting, as specified in the work order, for the initial ARW12 circuit pack to be placed in an output interface slot. For detailed information, see Procedure 3-6, "Setting Line Buildout (LBO)."
  - Insert the ARW12 circuit pack immediately into the approprate output interface slot.
  - For each of the remaining ARW12 circuit packs to be placed in the output interface slot, adjust the LBO setting as specified in the work order, and insert the ARW12 circuit pack immediately into the approprate output interface slot. Remember to replace the packs in pairs. DACS III-2000 systems provisioned with dual power feeds cannot support STS-1 circuit packs in slots 27 through 30.
  - Insert BUS EXT circuit packs in the remaining empty output interface slots.
- Extract the ARW2 circuit packs from the output protection slots and place in anti-static bags.
  - Adjust the LBO setting, as specified in the work order, for the initial ARW12 circuit pack to be placed in an output protection slot.
  - Insert the ARW12 circuit pack immediately into the approprate output protection slot. For detailed information, see Procedure 3-6, "Setting Line Buildout (LBO)."
  - For the remaining ARW12 circuit pack to be placed in the output protection slot, adjust the LBO setting as specified in the work order, and insert the ARW12 circuit pack immediately into the approprate output protection slot.

— Insert BUS EXT circuit packs in the remaining empty output protection slots because DACS III-2000 systems provisioned with dual power feeds cannot support STS-1 circuit packs in slots 27 through 30.

- Affix the labels provided to the frame shelves to cover the DS3 references.

9. Provision the unit to carry SONET service by entering the following command:

```
ENT-EQPT:[TID]:ELOC:[CTAG]:STS1;
```

where

TID = the target identification (optional).

ELOC = the equipment location, identified as
UNIT-{1 through 4} on a 1024-size system or
UNIT-{1 through 8} on a 2048-size system

CTAG = the correlation tag (optional)

— If the system responds with the COMPLD message, the unit was provisioned successfully.

— If the system responds with the DENY message, check the error code in Appendix C for an explanation. Call your system administrator or the next level of technical support for assistance, if necessary.

10. Restore the unit controller for the input interface module by entering the following command:

```
RST-EQPT:[TID]:ELOC:[CTAG];
```

where

TID = the target identification (optional).

ELOC = the equipment location, identified as
UC-{1 through 4}-IN on a 1024-size system or
UC-{1 through 8}-IN on a 2048-size system

CTAG = the correlation tag (optional)

— If the system responds with the COMPLD message, the unit controller for the input interface module was restored successfully.

— If the system responds with the DENY message, check the error code in Appendix C for an explanation. Call your system administrator or the next level of technical support for assistance, if necessary.

11. Restore the unit controller for the output interface module by entering the following command:

    RST-EQPT:[TID]:ELOC:[CTAG];

    where

    TID = the target identification (optional).

    ELOC = the equipment location, identified as UC-{1 through 4}-OUT on a 1024-size system or UC-{1 through 8}-OUT on a 2048-size system.

    CTAG = the correlation tag (optional).

    — If the system responds with the COMPLD message, the unit controller for the output interface module was restored successfully.

    — If the system responds with the DENY message, check the error code in Appendix C for an explanation. Call your system administrator or the next level of technical support for assistance, if necessary.

12. You have now completed converting the unit for SONET service. Repeat this procedure, from Step 1, for any additional units to be converted.

Convert an Input/Output Bay from an STS-1 to a DS3 Signal Type

Use this procedure to convert a provisioned STS-1 I/O bay to a DS3 I/O bay. Note the following:

- You cannot mix signal types within a bay.
- During this procedure, office alarms will be generated. Call your system administrator. or the next level of technical support to determine if you should silence the office alarms generated by this procedure.
- If any alarms are generated during this process, see Chapter 9, "Trouble-clearing—General" of this document for information on how to clear them.

Procedure 6-9. Converting an STS-1 I/O Bay to a DS3 I/OBay

CAUTION:
Electrostatic discharge (ESD) damage. ESD can cause damage to the components of a DACS III-2000 system. Wear an ESD wrist strap when working around the frame.

1. Before you begin, ensure that the following prerequistes have been met.
   - Read the entire procedure before beginning.
   - Convert only one bay at a time, and ensure that you are converting the correct bay.
   - Verify that the printer is in working order and there is an ample supply of paper.
   - Refer to your work order and ensure that you have sufficient anti-static bags for the STS1 and BUS EXT circuit packs that you will remove from the bay.
   - Refer to your work order and ensure that you have sufficient DS3 circuit packs to convert the bay: ARW1, ARW2, ARW3, ARW6, and at least one spare of each DS3 circuit pack.
   - Refer to your work order and ensure that you have sufficient BUS EXT circuit packs to populate the unequipped slots in the bay you are converting.
   - Verify that you are running Release 4.0 by entering the following command and checking the system release field:

     `RTRV-SYSID:[TID]::[CTAG];`

where

TID = the target identification (optional).

CTAG = the correlation tag (optional).

The normal system response should be:

```
  <TID n# YY-MM-DD HH:MM:SS>
M  RTRV SYSID::::<CTAG> COMPLD
   "SYS,PROG,<SYSTEM_TYPE,SYSTEM_RELEASE>,,,,"
   "PRI,PROG,<SYSTEM_TYPE,SYSTEM_RELEASE>,,,,"
   "SEC,PROG,<SYSTEM_TYPE,SYSTEM_RELEASE>,,,,"
   "WKG,DBASE,<SYSTEM_TYPE,SYSTEM_RELEASE,TID,
        STAT,DATE,TIME>"
   "PRI,DBASE,<SYSTEM_TYPE,SYSTEM_RELEASE,TID,
        STAT,DATE,TIME>"
   "SEC,DBASE,<SYSTEM_TYPE,SYSTEM_RELEASE,TID,
        STAT,DATE,TIME>"
   "PRI,MAPS,<SYSTEM_TYPE,SYSTEM_RELEASE,TID>,,
        <DATE,TIME>"
   "SEC,MAPS,<SYSTEM_TYPE,SYSTEM_RELEASE,TID>,,
        <DATE,TIME>
;
```

If the system responds with the DENY message, check the error code in Appendix C for an explanation. Call your system administrator or the next level of technical support for assistance, if necessary.

- Verify that no alarms exist on the system by entering:

  RTRV-ALM-ALL;

  — If there are no alarms, the system responds with the following message:

```
  <TID n# YY-MM-DD HH:MM:SS>
M RTRV ALM ALL::<ELOC:CTAG:NOCD,COTY,SRV>
  COMPLD
;
```

  — If there *are* alarms, the system responds with the following message:

```
  <TID n# YY-MM-DD HH:MM:SS>
M RTRV ALM ALL::<ELOC:CTAG:NOCD,COTY,SRV>
   COMPLD
 /* LOC:NTFCNDE,CONDTYPE,SRVEFF */
  "<LOC:NTFCNDE,CONDTYPE,SRVEFF>"
;
```

  where

NTFCNCDE = the notification code: CR, indicates a critical alarm; MJ a major alarm; MN, a minor alarm.

— If alarms exist, clear the alarms before proceeding. See Procedure 9-1, "How to Clear Alarms."

- Copy the database from PRI to SEC. If you need detailed information on this command, see Procedure 8-3, "Making Backups to Optical Cartridges."

  If you do *not* have alternate maps, enter the command:

  ```
  CPY-MEM:::PRI,SEC,DBASE;
  ```

  If you have alternate maps, enter the command:

  ```
  CPY-MEM:::PRI,SEC,BOTH;
  ```

  — If the system responds with the COMPLD message, the copy completed successfully.

  — If the system responds with the DENY message, check the error code in Appendix C for an explanation. Call your system administrator or the next level of technical support for assistance, if necessary.

2. Verify that no cross-connections exist for the unit that is going to be converted by entering the following commands for each unit being converted:

   - Retrieve the one and two-way cross-connections for the unit by entering the appropriate command:

     — For *Message Set 1:*

     ```
     RTRV-DSX-STS1:[TID]:ELOC:[CTAG];
     ```

     — For *Message Set 2:*

     ```
     RTRV-CRS-STS1:[TID]:EC1P:[CTAG];
     ```

     where

     TID = the target identification (optional).

     EC1P = the equipment location, identified as UNIT-{1 through 4} on a 1024-size system or UNIT-{1 through 8} on a 2048-size system.

     ELOC = the equipment location, identified as UNIT-{1 through 4} on a 1024-size system or UNIT-{1 through 8} on a 2048-size system.

     CTAG = the correlation tag used to associate a command with an output response.

— If the system responds with the COMPLD message, the retrieval was completed successfully.

— If cross-connections exist, take them down using Procedure 5-9, "Disconnecting One-Way Cross-Connections," and Procedure 5-12, "Disconnecting Two-Way Cross-Connections." Repeat the **RTRV-DSX-STS1** or the **RTRV-CRS-STS1** command to verify that the cross-connections have been taken down.

— If the system responds with the DENY message, check the error code in Appendix C for an explanation. Call your system administrator or the next level of technical support for assistance, if necessary

- Retrieve 1x2 (bridge) broadcast connections for the unit by entering the command:

  RTRV-BDCST-STS1:[TID]:EC1P:[CTAG];

  where

  TID = the target identification (optional).

  EC1P = the equipment location, identified as UNIT-{1 through 4} on a 1024-size system or UNIT-{1 through 8} on a 2048-size system.

  CTAG = the correlation tag (optional).

  — If the system responds with the COMPLD message, the retrieval was successful.

  — If cross-connections exist, take them down using Procedure 5-17, "Disconnecting 1x2 (Bridge) Broadcast Cross-Connections." Repeat the **RTRV-BDCST-STS1** command to verify that the broadcast connections have been taken down.

  — If the system responds with the DENY message, check the error code in Appendix C for an explanation. Call your system administrator or the next level of technical support for assistance, if necessary.

- Retrieve the multiple port (conference) broadcast information for the unit being converted by entering the command:

  RTRV-CONF-STS1:[TID]:EC1P:[CTAG];

where

TID = the target identification (optional).

EC1P = the equipment location, identified as
UNIT-{1 through 4} on a 1024-size system or
UNIT-{1 through 8} on a 2048-size system.

CTAG = the correlation tag (optional).

— If the system responds with the COMPLD message, the retrieval of conference information completed successfully.

— If multiple port connections exist, take them down using Procedure 5-22, "Deleting Multiple Port (Conference) Broadcast Leg(s)." Repeat the **RTRV-CONF-STS1** command to verify that the conference connections have been taken down.

— If the system responds with the DENY message, check the error code in Appendix C for an explanation. Call your system administrator or the next level of technical support for assistance, if necessary.

3. Check to see if performance monitoring schedules exist for the input ports in the unit to be converted by entering the command:

RTRV-PMSCHED-EC1:[TID]:EC1P:[CTAG];

where

TID = the target identification (optional).

EC1P = the equipment location, identified as
UNIT-{1 through 4} on a 1024-size system or
UNIT-{1 through 8} on a 2048-size system.

CTAG = the correlation tag (optional).

— If no schedules exist you should receive the following "null" response:

```
   <TID n# YY-MM-DD  HH:MM:SS>
M RTRV PMSCHED EC1::<EC1P:CTAG> COMPLD
;
```

— If schedules exist, you will receive the following response:

```
   <TID n# YY-MM-DD  HH:MM:SS>
M  RTRV PMSCHED EC1::<EC1P:CTAG> COMPLD
   /* LOC:REPTINVL,REPTDAT,REPTIM,NUMREPT,MONTYPE,
     MONLEV,LOCN,,TMPER,TMOFST,INH MODE */
   "<LOC:REPTINVL,REPTDAT,REPTIM,NUMREPT,MONTYPE,
     MONLEV,LOCN,,TMPER,TMOFST,INH MODE>"
;
```

— If schedules exist, cancel them by entering:

```
SCHED-PMREPT-EC1:[TID]:EC1P:[CTAG];
```

where

TID = the target identification (optional).

EC1P = the equipment location, identified as UNIT-{1 through 4} on a 1024-size system or UNIT-{1 through 8} on a 2048-size system.

CTAG = the correlation tag (optional)

Repeat the RTRV-PMSCHED-T3 command to verify that the schedules have been canceled.

— If the system responds with the DENY message, check the error code in Appendix C for an explanation. Call your system administrator or the next level of technical support for assistance, if necessary.

4. Deprovision the circuit packs by entering the following command for each circuit pack in the unit to be converted:

```
DISC-EQPT:[TID]:ELOC:[CTAG];
```

where

TID = the target identification (optional).

ELOC = the equipment location of all provisioned interface circuit packs in the unit, identified as STS1IN-unit-slot, or STS1OUT-unit-slot. Allowable values for unit are 1 through 4 on a 1024-size system or 1 through 8 on a 2048-size system. Allowable values for.slot are 1 through 30.

CTAG = the correlation tag (optional).

— If the system responds with the COMPLD message, the deprovisioning of the circuit packs was completed successfully.

— If the system responds with the DENY message, check the error code in Appendix C for an explanation. Call your system administrator or the next level of technical support for assistance, if necessary. If you receive the SNVS error code, then cross-connects still exist on the bay. Return to Step 2.

5. Remove the unit controllers from service.

■ Enter the following command to remove the input unit controller from service for the unit being converted. The red UC LED will light.

```
RMV-EQPT:[TID]:ELOC:[CTAG];
```

where

TID = the target identification (optional).

ELOC = the input unit controller of the bay being converted. Allowable values for unit are
UC-{1 through 4}-IN on a 1024-size system or
UC-{1 through 8}-IN on a 2048-size system.

CTAG = the correlation tag (optional).

— If the system responds with the COMPLD message, the input unit controller was removed from service successfully.

— If the system responds with the DENY message, check the error code in Appendix C for an explanation. Call your system administrator or the next level of technical support for assistance, if necessary.

- Enter the following command to remove the output unit controller from service for the unit being converted. The red UC LED will light.

```
RMV-EQPT:[TID]:ELOC:[CTAG];
```

where

TID = the target identification (optional).

ELOC = the output unit controller of the bay being converted. Allowable values for unit are
UC-{1 through 4}-OUT on a 1024-size system or
UC-{1 through 8}-OUT on a 2048-size system.

CTAG = the correlation tag (optional).

— If the system responds with the COMPLD message, the outpu unit controller was removed from service successfully.

— If the system responds with the DENY message, check the error code in Appendix C for an explanation. Call your system administrator or the next level of technical support for assistance, if necessary.

6. Disconnect the unit being converted by entering the following command:

```
DISC-EQPT:[TID]:ELOC:[CTAG];
```

where

TID = the target identification (optional).

ELOC = the unit being converted, identified as
UNIT-{1 through 4} on a 1024-size system or
UNIT-{1 through 8} on a 2048-size system.

CTAG = the correlation tag (optional).

— If the system responds with the COMPLD message, the unit was disconnected successfully.

— If the system responds with the DENY message, check the error code in Appendix C for an explanation. Call your system administrator or the next level of technical support for assistance, if necessary.

7. Physically extract all STS1 interface and protection circuit packs and insert the DS3 packs in the following order.

   - Extract the ARW13 circuit packs and place in anti-static bags. Insert the ARW3 circuit packs in the slots previously occupied by the ARW13s.
   - Extract the ARW16 circuit packs and place in anti-static bags. Insert the ARW6 circuit packs in the slots previously occupied by the ARW16s.
   - Extract the ARW11 circuit packs and place in anti-static bags. Insert the ARW1 circuit packs into the input interface slots, as specified in your work order. Replace the packs in pairs.
   - If the unit is to be equipped for the alarm indication signal detection (AISDET) feature, insert the ARW8 circuit packs in slots 29 and 30 of the output module of the unit being converted. Affix the AISDET label to slots 29 and 30 of the output module.
   - Insert BUS EXT circuit packs in any open slots.
   - Extract the ARW12 circuit packs from the output interface slots and place in anti-static bags.

     — Adjust the LBO setting, as specified in the work order, for the initial ARW2 circuit pack to be placed in an output interface slot. For detailed information, see Procedure 3-6, "Setting Line Buildout (LBO)."

     — Insert the ARW2 circuit pack immediately into the approprate output interface slot.

     — For each of the remaining ARW2 circuit packs to be placed in the output interface slots, adjust the LBO setting as specified in the work order, and insert the ARW2 circuit pack immediately into the approprate output interface slot. Remember to replace the packs in pairs.

- Extract the ARW12 circuit packs from the output protection slots and place in anti-static bags.
  - — Adjust the LBO setting, as specified in the work order, for the first ARW2 circuit pack to be placed in the output protection slot. For detailed information, see Procedure 3-6, "Setting Line Buildout (LBO)."
  - — Insert the ARW2 circuit pack immediately into the approprate output protection slot.
  - — For the remaining ARW2 circuit pack to be placed in the output protection slot, adjust the LBO setting as specified in the work order, and insert the ARW2 circuit pack immediately into the approprate output protection slot.

8. Provision the unit to carry DS3 service by entering the following command:

```
ENT-EQPT:[TID]:ELOC:[CTAG]:DS3P;
```

where

TID = the target identification (optional).

ELOC = the equipment location, identified as
UNIT-{1 through 4} on a 1024-size system or
UNIT-{1 through 8} on a 2048-size system.

CTAG = the correlation tag (optional).

— If the system responds with the COMPLD message, the unit was provisioned successfully.

— If the system responds with the DENY message, check the error code in Appendix C for an explanation. Call your system administrator or the next level of technical support for assistance, if necessary.

9. Restore the unit controller for the input interface module by entering the following command:

```
RST-EQPT:[TID]:ELOC:[CTAG];
```

where

TID = the target identification (optional).

ELOC = the equipment location, identified as
UC-{1 through 4}-IN on a 1024-size system or
UC-{1 through 8}-IN on a 2048-size system.

CTAG = the correlation tag (optional).

— If the system responds with the COMPLD message, the unit controller for the input interface module was restored successfully.

— If the system responds with the DENY message, check the error code in Appendix C for an explanation. Call your system administrator or the next level of technical support for assistance, if necessary.

10. Restore the unit controller for the output interface module by entering the following command:

```
RST-EQPT:[TID]:ELOC:[CTAG];
```

where

TID = the target identification (optional).

ELOC = the equipment location, identified as UC-{1 through 4}-OUT on a 1024-size system or UC-{1 through 8}-OUT on a 2048-size system.

CTAG = the correlation tag (optional).

— If the system responds with the COMPLD message, the unit controller for the output interface module was restored successfully.

— If the system responds with the DENY message, check the error code in Appendix C for an explanation. Call your system administrator or the next level of technical support for assistance, if necessary.

You have now completed converting the unit for DS3 service. Repeat this procedure, from Step 1, for any additional units to be converted.

Facilities Testing

7

Contents

Test Set Connections 7-2

- Incoming Circuits and Receivers 7-2
- Outgoing Circuits and Transmitters 7-5

Test Access Connections 7-10

- Establishing Test Access Connections 7-10
- Split Test Access to Monitor Test Access Conversion 7-14
- Disconnecting Test Access Connections 7-15

Loopbacks 7-18

Facilities Testing

7

The DACS III-2000 system provides test access to any port in the frame via two test modes: monitor and split. Monitor test access provides the ability to monitor or test the incoming signal without affecting service. Split test access provides the ability to send and receive test signals at the test port and is service affecting.

A test set contains a receiver that can analyze signals and a transmitter capable of generating signals of various types. The monitor mode of test access, which does not interrupt service, uses the test set's receiver to analyze a signal being cross-connected by a DACS III-2000 system.

The DACS III-2000 system also provides loopback capability to cross-connect a input port to its own output port. A loopback circuit can be used to sectionalize facility trouble.

Use an appropriate test set for the facility type you are testing (either DS3 or STS-1). The testing procedures are the same for each facility type, but enter the appropriate form of the command.

The procedures that follow provide basic information about using test sets and the system for facility testing and problem sectionalization. They are not intended to be used in place of existing installation procedures. If you need to test facility cables between a *newly installed* DACS III-2000 system and other network elements, refer to the procedures in Section 107 of the *Installation Procedures Handbook (IPH):* IPH 904 is used for 1024-size systems, IPH 906 for 2048-size systems.

Test Set Connections

Test sets can be connected to incoming and outgoing circuits to verify the signals.

Incoming Circuits and Receivers

The procedures for connecting and disconnecting a receiver to an incoming circuit follow. A precondition for this procedure is that the outputs from other network elements must be cabled to the DACS III-2000 system input ports, but they should *not* yet be cross-connected. A receiver connected to the DACS III-2000 output port can be used to test the incoming signal(s).

Procedure 7-1. Connecting Test Set Receivers to the Frame for Testing Incoming Circuits

CAUTION:
Electrostatic discharge (ESD) damage.
ESD can cause damage to the components of a DACS III-2000 system.
Wear an ESD wrist strap when working around the frame.

1. Identify the output port to which the test set receiver will be connected.
   - If your office has ports that have been assigned as dedicated maintenance ports and these ports are connected to a DSX-3 panel, identify one that is not being used. Continue this procedure at Step 2.
   - If your office does not have dedicated maintenance ports, identify an unused output port and connect it to a DSX-3 panel before continuing this procedure at Step 2.
2. Using the test lead, connect the transmission test set receiver to the DSX-3 port. A direct connection between the DACS III-2000 I/O bay and the test set is not recommended.

CAUTION:
Loss of service.
Connecting and disconnecting cables to input or output ports that are carrying live service will result in loss of that service.
Verify port numbers carefully and do not remove any existing cables from the DSX-3 panel or the DACS III-2000 interconnect panel that may be carrying live service.

3. Identify the incoming facility input port number to which you want to cross-connect the test set receiver.

4. Enter the appropriate command form for your signal type:

   — For *Message Set 1*

   ```
   CONN-DSX1-{STS1|T3}:[TID]:FRPT,TOPT:[CTAG];
   ```

   — For *Message Set 2*

   ```
   ENT-CRS-{STS1|T3}:[TID]:FRPT,TOPT:[CTAG]::1WAY;
   ```

where

`TID` = the target identification (optional)

`FRPT` = the input port that the test set is monitoring, identified as unit-slot-port

`TOPT` = the output port to which the test set is attached, identified as unit-slot-port

`CTAG` = the correlation tag (optional)

Allowable values for unit are 1 through 4 on a 1024-size system or 1 through 8 on a 2048-size system; slot, 1 through 30; port, 1 through 8.

For example, the following command cross-connects port 3-2-1 carrying an STS-1 signal to the port to which the test set is connected (1-22-7):

— For *Message Set 1*

```
CONN-DSX1-STS1::3-2-1,1-22-7;
```

— For *Message Set 2*

```
ENT-CRS-STS1::3-2-1,1-22-7:::1WAY;
```

Procedure 7-2. Disconnecting Test Set Receivers from the Frame and Incoming Circuits

CAUTION:
Electrostatic discharge (ESD) damage.
ESD can cause damage to the components of a DACS III-2000 system.
Wear an ESD wrist strap when working around the frame.

1. Determine the output port number to which the test set receiver is attached.
2. Determine the input port number that is being monitored.
3. Enter the appropriate command form for your signal type:
   — For *Message Set 1*

   ```
   DISC-DSX1-{STS1|T3}::FRPT,TOPT;
   ```

   — For *Message Set 2*

   ```
   DLT-CRS-{STS1|T3}::FRPT,TOPT:::1WAY;
   ```

   where

   `FRPT` = the input port that the test set is monitoring; identified as unit-slot-port

   `TOPT` = the output port to which the test set is attached; identified as unit-slot-port

   Allowable values for unit are 1 through 4 on a 1024-size system or 1 through 8 on a 2048-size system; slot, 1 through 30; port, 1 through 8.
4. Remove the test set lead from the DSX-3 panel.

CAUTION:
Loss of service.
Connecting and disconnecting cables to input or output ports that are carrying live service will result in loss of that service.
Verify port numbers carefully and do not remove any existing cables from the DSX-3 panel or the DACS III-2000 interconnect panel that may be carrying live service.

Outgoing Circuits and Transmitters

The procedures for connecting and disconnecting transmitters to outgoing circuits follow. A precondition for this procedure is that the inputs to other network elements must be cabled to the DACS III-2000 system's output ports, but not yet cross-connected. A transmitter connected to the DACS III-2000 input ports can be used to generate outgoing signal(s) that are verified at the downstream network element.

Procedure 7-3. Connecting Test Set Transmitters to the Frame for Testing Outgoing Circuits

CAUTION:
Electrostatic discharge (ESD) damage.
ESD can cause damage to the components of a DACS III-2000 system. Wear an ESD wrist strap when working around the frame.

1. Identify the input port to which the test set transmitter will be connected.
   - If your office has ports that have been assigned as dedicated maintenance ports and they are connected to a DSX-3 panel, identify one that is not being used and continue this procedure at Step 2.
   - If your office does not have dedicated maintenance ports, identify an unused input port and connect it to a DSX-3 panel before continuing this procedure at Step 2.
2. Using the test lead, connect the transmission test set transmitter to the DSX-3 port. A direct connection between the DACS III-2000 I/O bay and the test set is not recommended.

CAUTION:
Loss of service.
Connecting and disconnecting cables to input or output ports that are carrying live service will result in loss of that service.
Verify port numbers carefully and do not remove any existing cables from the DSX-3 panel or the DACS III-2000 interconnect panel that may be carrying live service.

3. Identify the incoming facility input port number to which you want to cross-connect the test set transmitter.

4. Enter the appropriate command form for your signal type:

   — For *Message Set 1*

   ```
   CONN-DSX1-{STS1|T3}:[TID]:FRPT,TOPT:[CTAG];
   ```

   — For *Message Set 2*

   ```
   ENT-CRS-{STS1|T3}:[TID]:FRPT,TOPT:[CTAG]::1WAY;
   ```

   where

   `TID` = the target identification (optional)

   `FRPT` = the input port to which the test set is connected, identified as unit-slot-port

   `TOPT` = the output port, identified as unit-slot-port

   `CTAG` = the correlation tag (optional)

   Allowable values for unit are 1 through 4 on a 1024-size system or 1 through 8 on a 2048-size system; slot, 1 through 30; port, 1 through 8.

   For example, the following command cross-connects output port 1-22-7, carrying an STS-1 signal, to the port to which the test set is connected (3-2-1):

   — For *Message Set 1*

   ```
   CONN-DSX1-STS1::3-2-1,1-22-7;
   ```

   — For *Message Set 2*

   ```
   ENT-CRS-STS1::3-2-1,1-22-7:::1WAY;
   ```

5. Repeat Steps 1 through 4 as required for additional transmit test set outputs.

6. If you have used all the ports on the test set's transmitter and you want to cross-connect to additional output ports, do the following:

   a. Identify the output port to which you want to cross-connect the test set.

   b. Enter the appropriate command form for your signal type:

   ```
   CONN-BDCST-{STS1|T3}:[TID]:FRPT,ADTO:[CTAG];
   ```

   where

   `TID` = the target identification (optional)

   `FRPT` = the input port to which the test set is connected; identified as unit-slot-port

   `ADTO` = the ADD TO output port, identified as unit-slot-port

   `CTAG` = the correlation tag (optional)

Allowable values for unit are 1 through 4 on a 1024-size system or 1 through 8 on a 2048-size system; slot, 1 through 30; port, 1 through 8.

For example, the following command "broadcasts" the port attached to the test set transmitter (unit-3, slot-2, port-1) and carrying an STS-1 signal to an additional output port (unit 4, slot 15, port 7). You would now have the test set cross-connected to output ports 1-22-7 and 4-15-7.

```
CONN-BDCST-STS1::3-2-1,4-15-7;
```

c. Repeat Steps 6a and 6b for additional output ports as required.

Procedure 7-4. Disconnecting Test Set Transmitters from the Frame and Outgoing Circuits

CAUTION:
Electrostatic discharge (ESD) damage.
ESD can cause damage to the components of a DACS III-2000 system. Wear an ESD wrist strap when working around the frame.

1. Determine the input port number to which the test set transmitter is attached.
2. Determine the output port numbers to which the test signal is cross-connected.
3. Enter the appropriate command form, for your signal type, to disconnect the cross-connection:

   — For *Message Set 1*

   ```
   DISC-DSX1-{STS1|T3}::FRPT,TOPT;
   ```

   — For *Message Set 2*

   ```
   DLT-CRS-{STS1|T3}::FRPT,TOPT:::1WAY;
   ```

   where

   `FRPT` = the input port to which the test set is attached, identified as unit-slot-port

   `TOPT` = the output port to which the test signal is cross-connected; identified as unit-slot-port

   Allowable values for unit are 1 through 4 on a 1024-size system or 1 through 8 on a 2048-size system; slot, 1 through 30; port, 1 through 8.
4. Repeat Step 3 for each cross-connection (including any Broadcast cross-connection).
5. Prevent an alarm from occurring by entering the appropriate command form for your signal type:

   — For *Message Set 1*

   ```
   ED-PRMTR-{EC1|T3}::{EC1P|DS3P::,NDRVN;
   ```

   — For *Message Set 2*

   ```
   ED-{EC1|T3}::{EC1P|DS3P}::::ISTAT=NDRVN;
   ```

   where

   `EC1P|DS3P` = the input port from Step 3

6. Remove the test set lead from the DSX-3 panel.

CAUTION:
Loss of service.
Connecting and disconnecting cables to input or output ports that are carrying live service will result in loss of that service.
Verify port numbers carefully and do not remove any existing cables from the DSX-3 panel or the DACS III-2000 interconnect panel that may be carrying live service.

7. Restore the port to its initial state by entering the appropriate command form for your signal type:

   — For *Message Set 1*

   ED-PRMTR-{EC1|T3}::{EC1P|DS3P}::,INIT;

   — For *Message Set 2*

   ED-{EC1|T3}::{EC1P|DS3P}::::ISTAT=INIT;

   where

   EC1P|DS3P = the port identified in Step 3

Test Access Connections

This section covers:

- establishing monitor test access connections
- establishing split test access connections
- changing from split to monitor test access connections
- disconnecting test access connections.

Establishing Test Access Connections

Procedures for establishing monitor and split test access connections follow.

Procedure 7-5. Establishing Monitor Test Access Connections

1. Enter the appropriate command form, of the following monitor test access command, for your signal type:

   CONN-TACC-{STS1|T3}::TPRT,FRPT,[TOPT]::[LASN];

   where:

   TPRT = the TESTPORT, identified as unit-slot-port

   FRPT = the FROM port, identified as unit-slot-port

   TOPT = the CURRENT TO port, identified as unit-slot-port. If the FROM port is idle, omit this value or the command is denied. If you do specify this parameter, you must map to the FROM port or the command is denied. If the parameter is omitted and the FROM port is mapped to exactly one output port, this becomes the CURRENT TO port for the test session. Otherwise, the CURRENT TO port is NULL (optional).

   LASN = the link association, which specifies whether or not the test session is to be associated with the user/link on which this command is given; identified as YES or NO (optional).

   Allowable values for unit are 1 through 4 on a 1024-size system or 1 through 8 on a 2048-size system; slot, 1 through 30; port, 1 through 8.

   - If the system responds with the COMPLD message, the monitor test connection has been established.
   - If the system responds with the DENY message, check the error code in Appendix C for an explanation.

As shown in Figure 7-1, the test port 3-2-1 is connected to monitor the FROM port 1-22-7 by entering the appropriate command form, for your signal type, for *Message Set 1* and *Message Set 2*

```
CONN-TACC-{STS1|T3}::3-2-1,1-22-7,1-1-2;
```

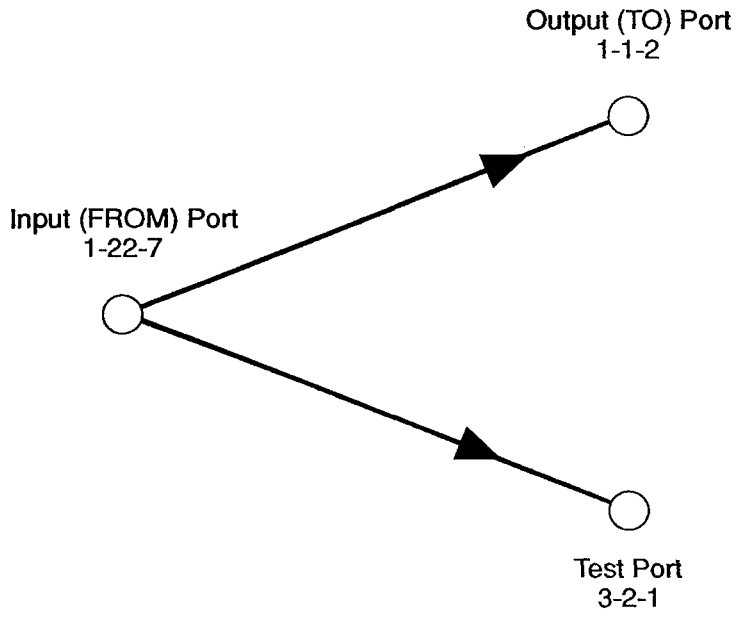

Figure 7-1. Connected Test Port and Input Port

2. Notify your system administrator or the next level of technical support when monitor test access has been established.

Procedure 7-6. Establishing Split Test Access Connections

CAUTION:
Loss of service.
Establishing split test access interrupts the signal to the output port of the original cross-connect.
Verify that service has been removed or can be interrupted and establish a test signal at the test port input before executing this command.

Enter the split test access command remembering that when using the split command, the monitor test connection must have been made for an existing cross-connection.

Enter the appropriate command form for your signal type:

```
CHG-TACC-{STS1|T3}::TPRT,[FRPT],[TOPT]::SPLT,:[LASN];
```

where

TPRT = the TESTPORT, identified as unit-slot-port

FRPT = the FROM port, that is the port being tested, identified as unit-slot-port (optional)

TOPT = the CURRENT TO output port for the test session. This parameter must be mapped to the FROM input port or the command is denied (optional).

LASN = the link association, which specifies whether or not the test session is to be associated with the user/link on which this command is given; identified as YES or NO (optional).

Allowable values for unit are 1 through 4 on a 1024-size system or 1 through 8 on a 2048-size system; slot, 1 through 30; port, 1 through 8. In the following example, after entering the split command for an STS-1 signal, the connection is configured as represented in Figure7-2.

```
CHG-TACC-STS1::3-2-1,1-22-7,1-1-2::SPLT;
```

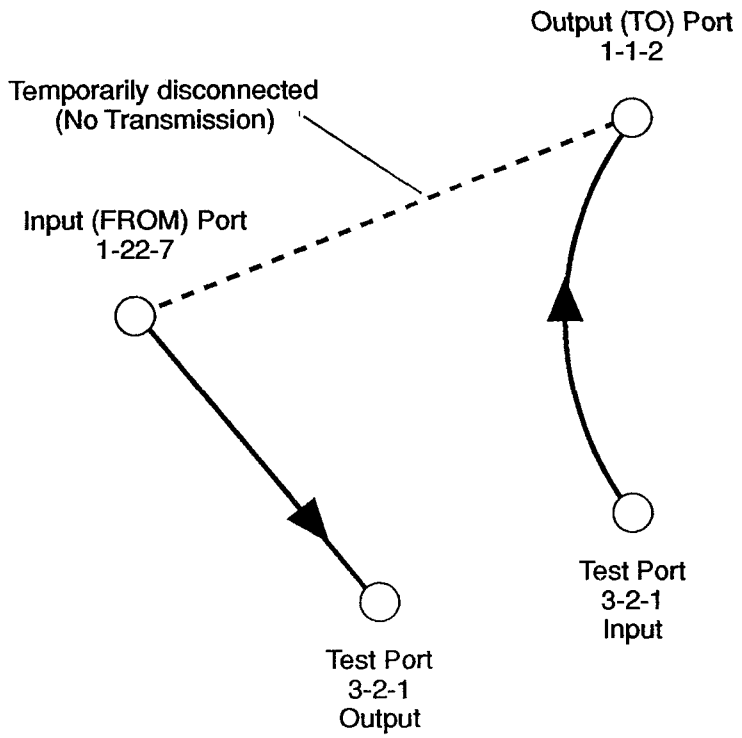

Figure 7-2. Split Connection

Split Test Access to Monitor Test Access Conversion

Procedure 7-7. Changing from Split Test Access to Monitor Test Access

1. Determine the test port number that you wish to change.
2. Change to the monitor (MON) mode using the appropriate command form for your signal type:

```
CHG-TACC-{STS1|T3}:[TID]:TPRT,[FRPT],[TOPT]:[CTAG]:
  MON,:[LASN];
```

where

TID	=	the target ID (optional)
TPRT	=	the TESTPORT port, identified as unit-slot-port
FRPT	=	the FROM port that is under test access, identified as unit-slot-port (optional)
TOPT	=	the CURRENT TO output port (optional) The TOPT parameter is useful if the FROM input port is broadcasting to several output ports to allow switching split access between them. If this parameter is given, it must be mapped to the FROM input port or the command is denied.
CTAG	=	the correlation tag (optional)
LASN	=	the link association, which specifies whether or not the test session is to be associated with the user/link on which this command is given; identified as YES or NO (optional)

Allowable values for unit are 1 through 4 on a 1024-size system or 1 through 8 on a 2048-size system; slot, 1 through 30; port, 1 through 8.

Disconnecting Test Access Connections

The following procedure disconnects a monitor test access connection between an input port and a TESTPORT. To change a split test access connection to a monitor test access connection, use Procedure 7-7, "Changing from Split Test Access to Monitor Test Access."

Procedure 7-8. Disconnecting Monitor Test Access Connections

1. Enter the appropriate form of the following command for your signal type
2. To retrieve all test access connections:

   RTRV-TACC-{STS1|T3};

   The system responds with the following message if test connections are present on the frame:

```
  <TID #n YY-MM-DD HH:MM:SS>
M  RTRV TACC {STS1|T3}:::<CTAG:STAGE> COMPLD:
   /*TESTPORT:PORT-STATE,FROM-PORT,CURR-TO-PORT,LINK ID,
         UID,LINK-ASSN,STAGE */
   "<TESTPORT:PORT-STATE,FROM-PORT,CURR-TO-PORT,LINK ID,
         UID,LINK-ASSN,STAGE> "
;
```

3. Determine from your office records the test port number that is to be disconnected.
4. Using the output from the RTRV-TACC-{STS1|T3} command, check the PORT-STATE field of the TESTPORT that is to be disconnected.
   - If the state is TP-SPL, continue this procedure at Step 4.
   - If the state is TP-MON, continue this procedure at Step 5.
5. Check the output mode of the port by entering the appropriate command form for your signal type:

   — For *Message Set 1*

   RTRV-PRMTR-{EC1|T3}::{EC1P|DS3P};

   — For *Message Set 2*

   RTRV-{EC1|T3}::{EC1P|DS3P};

   where

   EC1P|DS3P = the CURR-TO-PORT associated with the TP-SPL state found in Step 3.

   The system responds with one of the following messages:

— For *Message Set 1:*

```
  <TID #n YY-MM-DD HH:MM:SS>
M  RTRV PRMTR {EC1|T3}::<{EC1P|DS3P}:CTAG> COMPLD
   /* LOC:IN-STATE,OUT-STATE,FROM,TO,OMODE,CTYPE,TP,
         RDLD,BPV,IN-STAT */
   " <LOC:IN-STATE,OUT-STATE,FROM,TO,OMODE,CTYPE,TP,
         RDLD,BPV,IN-STAT> "
;
```

— For *Message Set 2:*

```
  <TID YY-MM-DD HH:MM:SS>
M  RTRV {EC1|T3}::<{EC1P|DS3P}:CTAG> COMPLD
   " <LOC::IN-STATE,OUT-STATE,FROM,TO,OMODE,CTYPE,TP,
         BERL,IN-STAT,SST> "
;
```

- If the OMODE is *not* AIS, continue this procedure at Step 5.
- If the OMODE is AIS, change it to NORM by entering the appropriate command form for your signal type:

  CHG-TACC-{EC1|T3}::TPRT,[FRPT],[TOPT]::,NORM;

  where

  TPRT = the TESTPORT port; identified as unit-slot-port

  FRPT = the FROM input port; identified as unit-slot-port

  TOPT = the CURRENT TO output port; identified as unit-slot-port

  Allowable values for unit are 1 through 4 on a 1024-size system or 1 through 8 on a 2048-size system; slot, 1 through 30; port, 1 through 8.

  Continue this procedure at Step 5.

6. Enter the appropriate disconnect command form, for your signal type, for a test access connection:

   DISC-TACC-{EC1|T3}::TPRT,[FRPT],[TOPT];

   where:

   TPRT = the TESTPORT, identified as unit-slot-port

   FRPT = the FROM port under test access, identified as unit-slot-port

   TOPT = the CURRENT TO output port, identified as unit-slot-port. If the TOPT parameter is given, it must be mapped to the FROM input port or the command is denied. If the TESTPORT is currently performing split test access, this must be the (CURRENT TO) output port which is being split or the command is denied.

Allowable values for unit are 1 through 4 on a 1024-size system or 1 through 8 on a 2048-size system; slot, 1 through 30; port, 1 through 8.

- If the system responds with the COMPLD message, the disconnection has been successful.
- If the system responds with the DENY message, check the error code in Appendix C for an explanation.

Loopbacks

A loopback is the cross-connection of an input port to its own output port. Use a loopback to sectionalize facility trouble. Loopback can be used on a port that is not cross-connected or on a port that is not cross-connected, but is under monitor test access.

Procedures for operating and releasing loopbacks follow.

Procedure 7-9. Operating Loopbacks

1. Obtain port number from office records.
2. Loop back the circuit by entering the appropriate command form for your signal type at the craft interface terminal:

   OPR-LPBK-{STS1|T3}:[TID]:{EC1P|DS3P}:[CTAG];

   where

   TID = the target ID (optional)

   EC1P|DS3P = the port, identified as unit-slot-port

   CTAG = the correlation tag (optional)

   Allowable values for unit are 1 through 4 on a 1024-size system or 1 through 8 on a 2048-size system; slot, 1 through 30; port, 1 through 8.

   - If the system responds with the COMPLD message, the loopback is operational.
   - If the system responds with the DENY message, check the error code in Appendix C for an explanation.
3. After a successful response COMPLD, inform the far end that the loopback is complete.

Procedure 7-10. Releasing Loopbacks

1. Identify the looped back circuit to be disconnected.
2. Disconnect the loopback using the appropriate command form for your signal type:

   RLS-LPBK-{STS1|T3}:[TID]:{EC1P|DS3P}:[CTAG];

   where

TID	=	the target ID (optional)
EC1P|DS3P	=	the port, identified as unit-slot-port
CTAG	=	the correlation tag (optional)

   Allowable values for unit are 1 through 4 on a 1024-size system or 1 through 8 on a 2048-size system; slot, 1 through 30; port, 1 through 8.

Routine Maintenance

8

Contents

Optical Drive Lens Cleaning 8-3

Optical Cartridge Cleaning 8-11

- Optical Cartridge Cleaning Kit 8-11

Memory Backups 8-17

- Memory Backup Command Format 8-17
- Manual Backup of a Release to Optical Cartridge 8-18
- Automatic Backups to Optical Cartridge 8-24

Fan Units 8-26

- Standard Fan Unit (ED2C906-30,G1) 8-26

Routine Maintenance

8

This chapter presents preventive procedures that must be done on a regular basis. The preventive procedures are designed to ensure that the DACS III-2000 system runs as trouble-free as possible.

Refer to the schedule in Table 8-1 for information on the frequency of execution for the various procedures.

Table 8-1. Preventive Maintenance Schedule

Activity	Frequency	Comment
Cleaning the Optical Drive Lens (Procedure 8-1)	once per month	More frequently if the environment is particularly dusty.*
Cleaning Optical Cartridges (Procedure 8-2)	once per month	More frequently if the environment is particularly dusty or you are experiencing problems with READ/WRITE activities.**
Making Backups to Optical Cartridges (Procedure 8-3)	Program backups: upon receipt of new release Database and alternate map backups: daily, if not done automatically	 Database and alternate map backups: more frequently if many changes are made during the course of a 24-hour period.
Scheduling Automatic Backups (Procedure 8-4)	daily	
Maintaining Standard (ED2C906-30,G1) Fan Units. (Procedure 8-5)	every 3 months	If filters are unusually dusty, inspect more often.

* If the lens is cleaned on a regular basis and you are experiencing problems with READ/WRITE activities, try another cartridge. If the problems persist, return the SEC3 circuit pack to the factory for repair. (If needed, see Procedure 3-11, "Returning Circuit Packs for Repair.")

** Try a second optical cartridge. If you still experience the same problem, send the SEC3 circuit pack to the factory for repair. (If needed, see Procedure 3-11, "Returning Circuit Packs for Repair.")

Optical Drive Lens Cleaning

The lens of the optical drive must undergo monthly cleaning to ensure the removal of dust and particles that accumulate on the lens. Only the approved lens cleaning kit should be used. Order lens cleaning kits using COMCODE 406935346.

After continued use, the bristles on the brush in the lens cleaning cartridge become splayed; see Figure 8-4, drawing B. When this occurs the lens cleaning cartridge must be discarded; a splayed brush cannot clean the lens completely.

The lens cleaning cartridge is similar in size and shape to a regular optical cartridge. The difference is that when the silver shutter slides open a cleaning brush moves into a vertical position for cleaning.

Procedure 8-1. Cleaning the Optical Drive Lens

CAUTION:
Electrostatic discharge (ESD) damage.
ESD can cause damage to the components of a DACS III-2000 system.
Wear an ESD wrist strap when working around the frame.

1. Determine where to begin this procedure by selecting from the following three options the one that applies to your situation:
   - If you are uncertain as to whether there is pending system activity involving the optical drive (SEC), or if you are uncertain whether there is an optical cartridge in SEC, continue this procedure at Step 2.
   - If you are certain there is no system activity involving the optical drive (SEC), but there is an optical cartridge in SEC, continue this procedure at Step 6.
   - If you are certain there is no system activity involving the optical drive (SEC), and that there isn't an optical cartridge in SEC, continue this procedure at Step 8.
2. Retrieve automatic backup information by entering:

   RTRV-BKUPSCHED-MEM;

   The system responds with the following message:

```
  <TID #n YY-MM-DD HH:MM:SS>
M  RTRV BKUPSCHED MEM::::PRI,,SEC COMPLD
   /* :FROMMEM,,TOMEM:MEMCLASS:INVL,BKUPDAT,BKUPTM: */
   ":PRI,,SEC:BOTH:,,:"
;
```

3. Check the date (BKUPDAT) and time (BKUPTM) parameters, looking for any backups scheduled during the next five minutes. If BKUPDAT or BKUPTM values do not appear in the message, no backups are scheduled.
   - If no backups are scheduled for the next five minutes, continue this procedure at Step 4.
   - If backups are scheduled for the next half hour, you can *either* wait for the scheduled backup to complete *or* get permission from your system administrator to cancel the scheduled backup (using the SCHED-BKUP-MEM command). When you know the system is ready, continue this procedure at Step 4.
4. Check for any pending CPY-MEM commands by entering:

   RTRV-CMD-STAT::::ALL;

   The system responds with the following message:

```
  <TID #n YY-MM-DD HH:MM:SS>
M  RTRV CMD STAT::::ALL COMPLD
   /* CMDCTAG, INPUT CMD, CMDSTAT */
   " <CMDCTAG, INPUT CMD, CMDSTAT> "
 ;
```

   where

   INPUT CMD = the commands that are pending execution

   CMDSTAT = the status of the pending command. IP means the command is in-progress; WRTSCE means the command is waiting for resources

   - If you do *not* find any CPY-MEM commands, continue this procedure at Step 5.
   - If you find any CPY-MEM commands, wait a minute or two, re-enter RTRV-CMD-STAT until you receive the message that no commands are executing or waiting for execution, then continue this procedure at Step 5. The system response will look like the following message:

```
  <TID #n YY-MM-DD HH:MM:SS>
M  RTRV CMD STAT::::ALL COMPLD
;
```

5. Look at the active (in use) LED on the optical drive. Figure 8-1 shows the location of the active (in use) LED.
   - If the LED is *not* lighted or flashing, continue this procedure at Step 6.
   - If the LED is lighted or flashing, the optical drive is in use. Wait until the LED is not lighted before continuing this procedure at Step 6.

6. Press the eject button at the bottom of the optical drive (SEC). Figure 8-1 shows the location of the eject button.

   After approximately three seconds, the optical cartridge is ejected from the drive about one inch.

   - If the optical cartridge ejected, continue this procedure at Step 7.
   - If the optical cartridge did *not* eject, it may be due to loss of power to the drive, or the SEC3 circuit pack was removed from its slot with a cartridge still in it, or there is a failure of the standard eject mechanism while power is still available. In any case, perform the following steps:

     a. Insert the emergency eject tool (COMCODE 406923292) into the hole provided in the optical drive. Figure 8-1 shows the hole for the emergency tool and the orientation for inserting the tool into the hole.

CAUTION:
Damage to optical drive.
Use of objects like a paper clip to force the optical cartridge to eject can damage the optical drive. Use only the approved emergency eject tool.

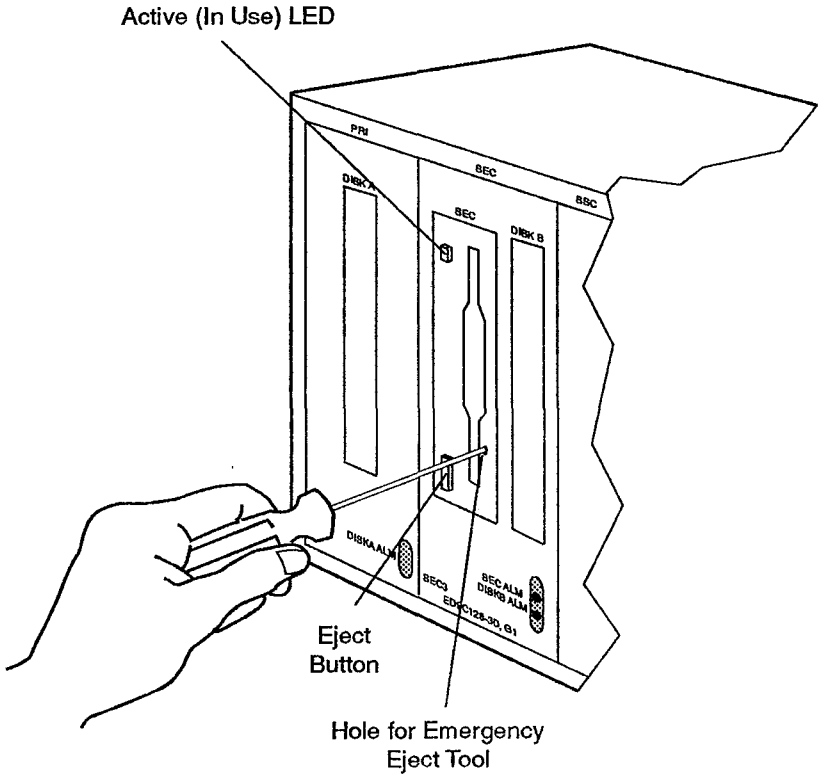

Figure 8-1. Using the Emergency Eject Tool

b. Insert the tool straight back into the hole, being careful not to tilt it towards the top, sides, or bottom of the optical drive.

c. Exert enough pressure on the tool until the cartridge pops out approximately one inch.

d. Continue this procedure at Step 7.

7. Pull the optical cartridge out of the optical drive. Figure 8-2 shows the normal way to remove an optical cartridge.

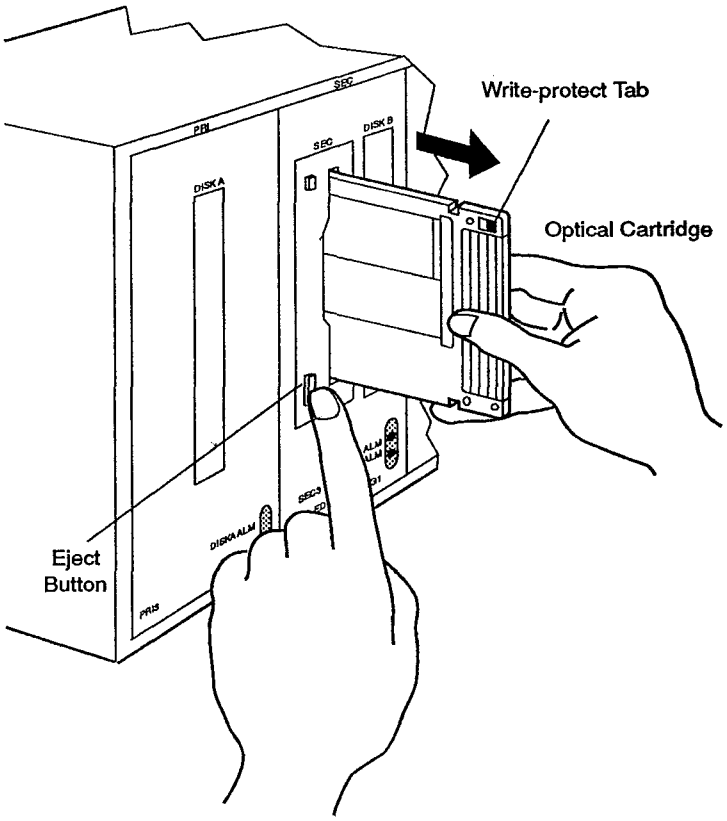

Figure 8-2. Removing an Optical Cartridge

8. Open the shutter on the lens cleaning cartridge and check the cleaning brush.

   Figure 8-3 shows how to open the shutter of the lens cleaning cartridge.

CAUTION:
Damage to optical drive.
Use of solvents may damage the optical drive.
Do not apply any solvents to the cleaning brush.

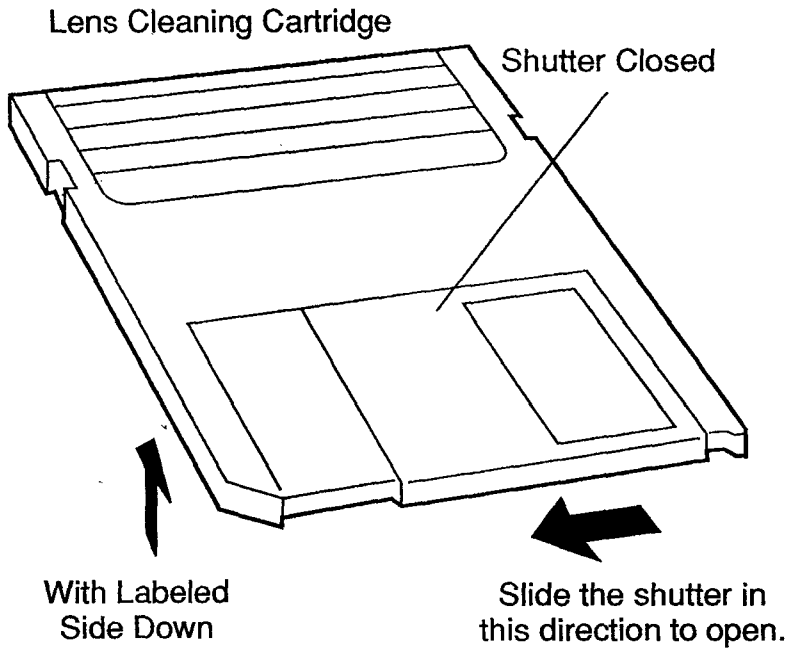

Figure 8-3. Optical Drive Lens Cleaning Cartridge—Shutter Closed

Figure 8-4 shows the lens cleaning cartridge with the shutter open and provides blowups of both a "normal" brush and a "splayed" brush.

- If the bristles are splayed, discard the used lens cleaning cartridge and get a new one.

  Figure 8-4, drawing B, shows a brush whose bristles are splayed.

- If the bristles are *not* splayed, continue this procedure at Step 9.

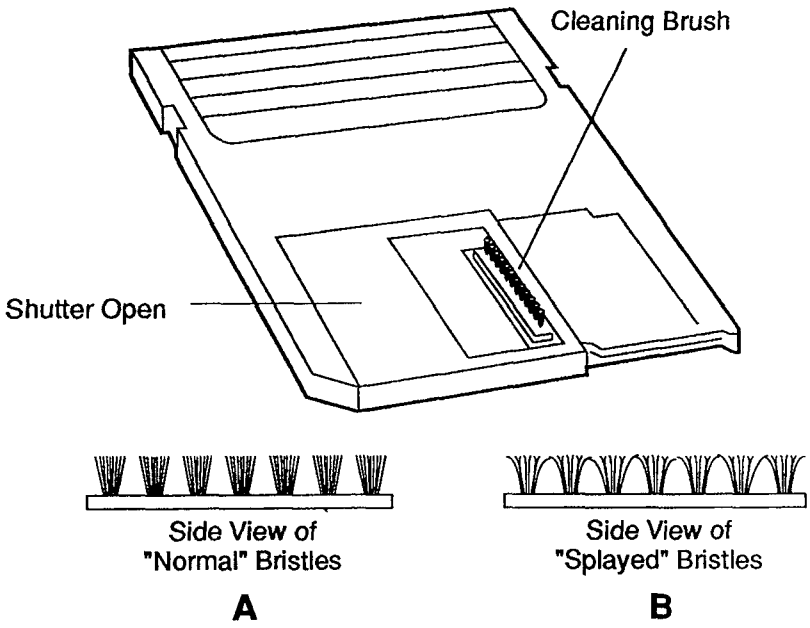

Figure 8-4. Optical Drive Lens Cleaning Cartridge—Shutter Open

9. Insert the lens cleaning cartridge into the optical drive with its labeled side facing to your right.

   Figure 8-5 shows the correct orientation for inserting a lens cleaning cartridge.

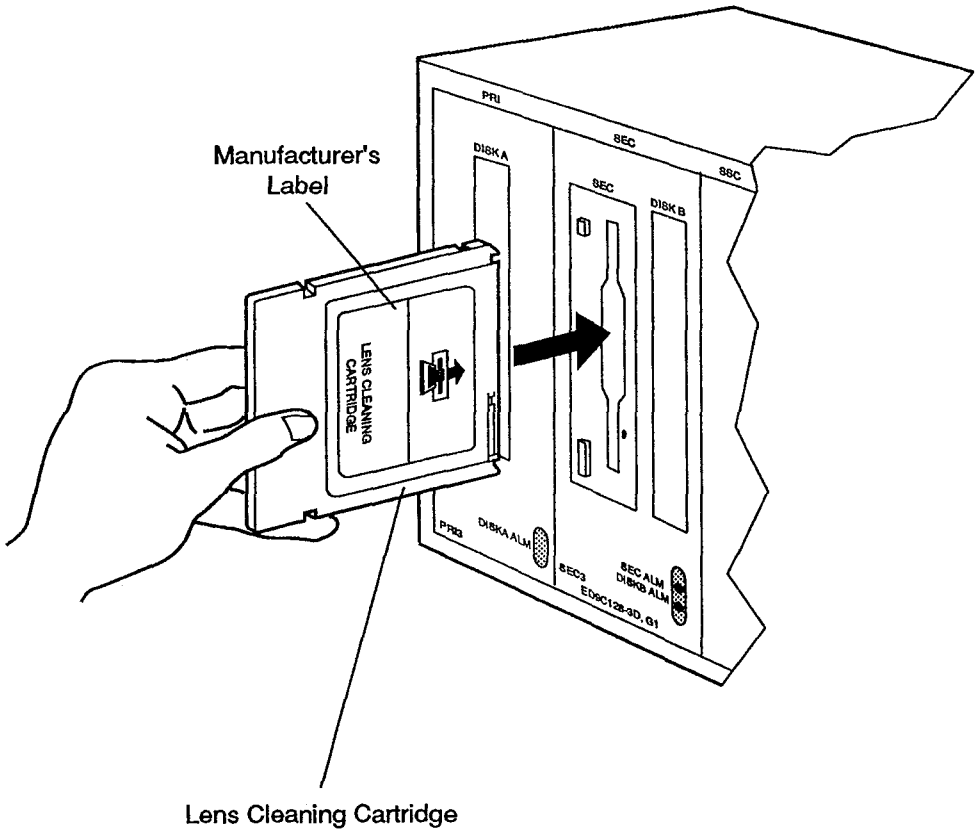

Figure 8-5. Inserting a Lens Cleaning Cartridge into Optical Drive

10. Gently push the lens cleaning cartridge towards the back of the optical drive until it is flush with the surface of the optical drive. (Note: The cleaning cartridge does not lock into the drive.) Then, maintaining contact with the cleaning cartridge, slowly move your hand away from the drive.

    The lens cleaning cartridge will protrude approximately one inch out of the optical drive.

11. Repeat Step 10 four to five times.

    When the lens cleaning cartridge is pushed into the drive, its flipping mechanism causes the brush inside to stand up. By repeating Step 10, dust and particles on the lens are removed by the brush. Normally, you will repeat the step four or five times to clean the lens completely.

12. After cleaning, remove the lens cleaning cartridge from the optical drive by pulling it out of the slot.

13. Store the lens cleaning cartridge in its cartridge case.

Optical Cartridge Cleaning

To maintain the high performance and prolong the useful life of your optical cartridges, follow the cleaning recommendation that best fits your work environment:

- If an optical cartridge is left in the optical drive for two weeks at a time, the optical cartridge should be removed for a biweekly cleaning.
- If the optical cartridge is stored in its case between uses, there is no need to clean the optical cartridge on a regular basis. If you notice dirt or dust accumulating, then it should be cleaned.
- If the optical cartridge is *not* stored in its case between uses and is left exposed for two weeks, it must be cleaned before the next use.

Optical Cartridge Cleaning Kit

Figure 8-6 shows the components of the optical cartridge cleaning kit (COMCODE 406942102).

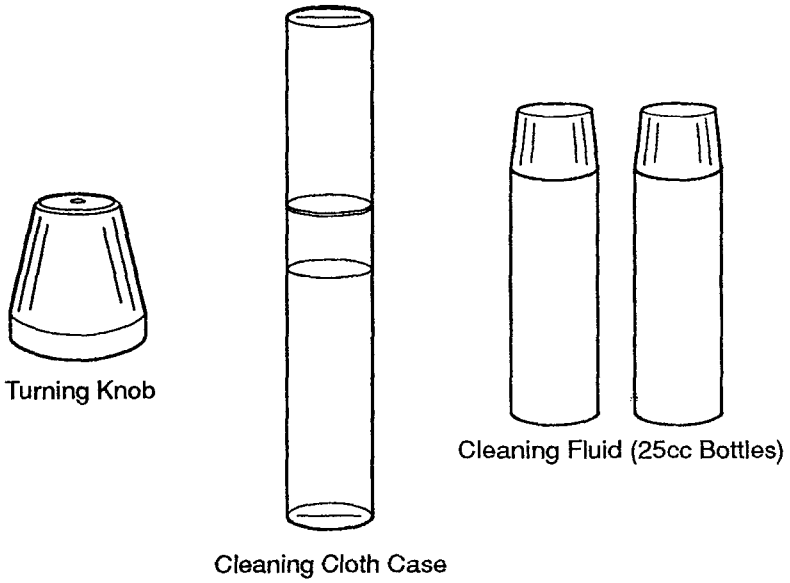

Figure 8-6. Optical Cartridge Cleaning Kit Components

The procedure for cleaning optical cartridges follows.

Procedure 8-2. Cleaning Optical Cartridges

CAUTION:
Damage to optical cartridge's disk surface.
Use of cleaning cloths or fluids from cleaning kits other than those approved for your optical cartridge may cause damage to the optical cartridge's disk surface.
Use only the cleaning materials supplied with your approved optical cartridge cleaning kit.

1. With the back of the optical cartridge facing you, slide the shutter to the right to expose the disk surface inside the optical cartridge. Figure 8-7 shows how to expose the disk surface.

CAUTION:
Data errors.
Fingerprints or small scratches on the disk surface may cause data errors. When cleaning, touch the disk surface only with the supplied cleaning cloth.

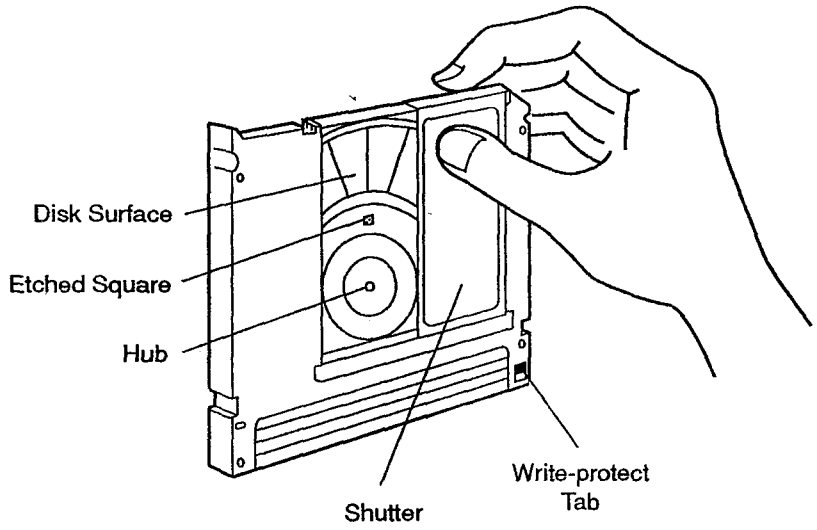

Figure 8-7. Exposing the Optical Cartridge Disk Surface

2. Attach the turning knob, supplied with the cleaning kit, to the hub at the center of the optical cartridge. Figure 8-8 shows how to attach the turning knob to the hub.

CAUTION:
Scratched disk surface.
The turning knob may cause damage to the data on the disk surface.
Do not make contact between the disk surface and the turning knob.

Once the turning knob is attached to the hub, you do not need to hold the shutter open; it will remain open until the turning knob is removed.

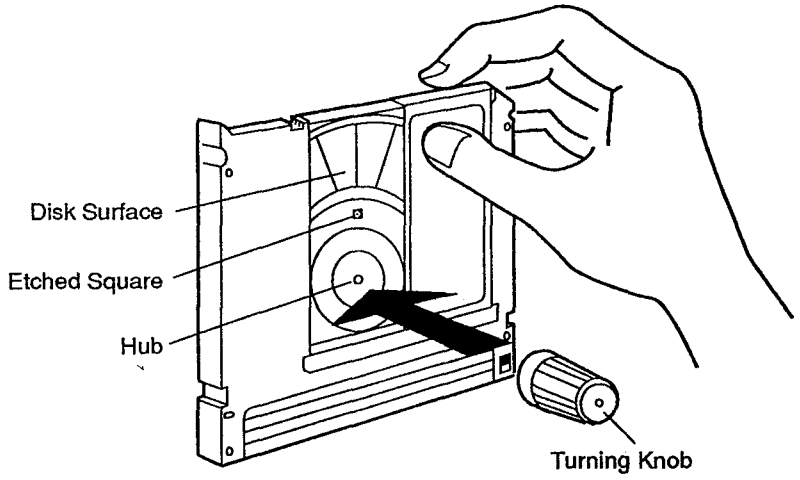

Figure 8-8. Attaching the Turning Knob to the Optical Cartridge

3. Rotate the turning knob until the etched square, shown in Figure 8-8, is centered above the turning knob.

Figure 8-9 shows that the turning knob rotates in either direction.

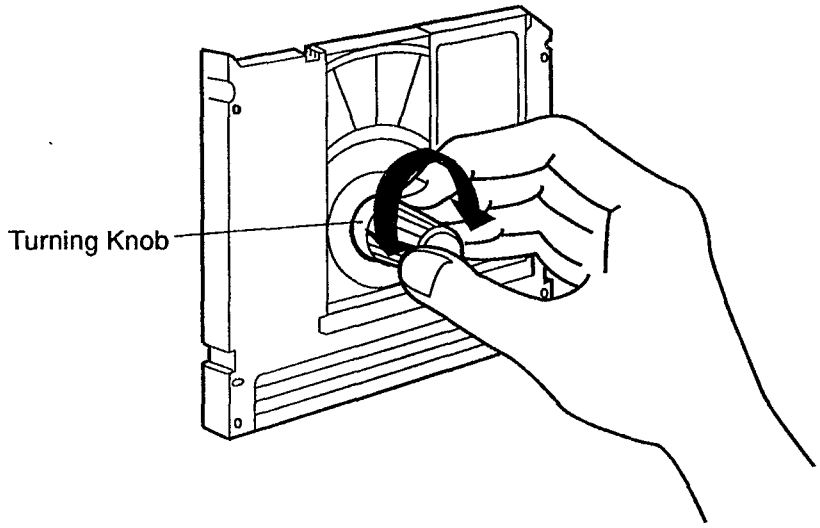

Figure 8-9. Rotating the Turning Knob on an Optical Cartridge

4. Apply a few drops of the cleaning fluid that came with the cleaning kit to the cleaning cloth.

WARNING:
Personal injury.
Accidental contact of cleaning fluid to either the eyes or mouth may cause possible injury.
Avoid any contact between the cleaning fluid and your eyes or mouth. If exposure occurs, wash the area immediately and consult a physician.

5. Gently wipe clean the exposed area of the disk surface, using the supplied cleaning cloth. It is important to move the cloth from the hub upward towards the edge of the disk surface; a side-to-side motion may damage the cartridge.

   Figure 8-10 shows the correct method of wiping the disk surface.

   Remember, only the *one* side of the disk surface, the side that has the turning knob attached to it, needs to be cleaned.

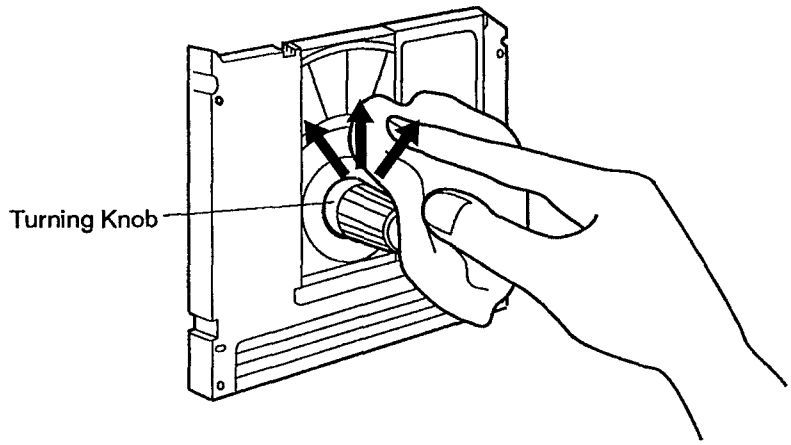

Figure 8-10. Wiping the Disk Surface of an Optical Cartridge

6. Repeat the following steps until the entire disk surface has been cleaned:

   a. Expose the next area to be cleaned by rotating the disk surface approximately 3/4", or two of the lines that appear on the disk surface.

   b. Clean the newly exposed disk surface.

   Once cleaning is complete, that is the etched square is again centered over the turning knob, rotate the turning knob one more complete revolution while wiping off any remaining cleaning fluid with a dry part of the cloth.

7. After cleaning, pull the turning knob off the hub, again exercising caution not to bring the turning knob near the disk surface.

   When the turning knob is removed, the optical cartridge's built-in spring closes the shutter.

8. Store the cleaning cloth in the supplied case.

   - If the cloth is very dirty, wash it first with water and dry it before returning it to its case.
   - If the cloth surface is so rough that pieces of thread remain on the disk surface after cleaning, or the cloth's color has changed as a result of numerous washings, replace the cleaning cloth.

9. Using standard office procedures, record the date the optical cartridge was cleaned.

Memory Backups

Backups from disk to optical cartridge can be done manually or automatically. It is recommended that you

- perform (manually or automatically) one hard disk (PRI) to optical cartridge (SEC) backup of the database and alternate maps (if used) every day
- maintain two or more optical cartridges and use them on a rotational basis as dictated by local procedure

This section provides information about the memory backup command and procedures to

- manually back up the release software from PRI to an optical cartridge (SEC)
- manually back up the database and alternate maps (if used)
- schedule automatic backups of the database and alternate maps (if used)

Memory Backup Command Format

The command to transfer memory from one source to another or to initialize and format the disk or optical cartridge is

```
CPY-MEM:::FMET,TMET,MECL;
```

where

FMET = the from memory type, identified as PRI, SEC, or INIT. **PRI** indicates the two primary hard disk drives (DISKA and DISKB). The system copies the data from only the hard disk drive that is in the IS-ACT state, generally DISKA. **SEC** indicates the optical drive, labeled as secondary to distinguish it from the hard disk drives. **INIT** indicates the "from" used when initializing the cross-connect database on the "to" memory or when formatting the "to" memory device. This option erases all cross-connects in the database.

TMET = the to memory type, identified as PRI or SEC. **PRI** indicates the two primary hard disk drives (DISKA and DISKB). The system transfers the data to both DISKA and DISKB. **SEC** indicates the optical drive.

MECL = the memory class, which specifies the class of information to be transferred, identified as PROG (program data), DBASE (database data), MAPS (alternate maps data), BOTH (database and alternate maps), or FORMAT (initialize and format DISKA, DISKB, or an optical cartridge)

Table 8-2 outlines the parameters to be used for the basic memory backup commands.

Table 8-2. Memory Backups

Function	Comments	From	To	Class
Make a backup copy of database on optical cartridge	Can be part of automatic backup function. Recommended once per day.	PRI	SEC	DBASE
Make a backup copy of alternate maps on optical cartridge	Can be part of automatic backup function. Recommended once per day if feature is used.	PRI	SEC	MAPS
Make a backup copy of release on optical cartridge	Do not use the master release optical cartridge for program backup. Use a *spare* optical cartridge.	PRI	SEC	PROG
Make a backup copy of database and alternate maps	Can be part of automatic backup function. Recommended once per day.	PRI	SEC	BOTH

Manual Backup of a Release to Optical Cartridge

The following procedure makes a backup from a hard disk (DISKA or DISKB, whichever is in the `IS-ACT` state) to an optical cartridge in the optical drive (SEC) of an in-service (`IS`) frame. The backup includes the program (release software), database, and alternate maps (if used).

The main controller (MC) module *must* be in an in-service (`IS`) state and all alarms *must be* cleared before executing the procedure.

CAUTION:
Unsuccessful data transfer.
Failure to have the write-protect tab in the OFF position will prevent data transfer from taking place.
Be sure that the write-protect tab on the back of the optical cartridge is fully locked in the OFF position. If needed, refer to Figure 3-14 for the correct position of the write-protect tab.

Procedure 8-3. Making Backups to Optical Cartridges

CAUTION:
Electrostatic discharge (ESD) damage.
ESD can cause damage to the components of a DACS III-2000 system.
Wear an ESD wrist strap when working around the frame.

1. Determine where to begin this procedure by selecting from the following two options the one that applies to your situation:
   - If you need to execute Procedure 8-3 because
     - — you were directed to this procedure from another procedure
     - — *and* the main controller (MC) module is in the in-service (IS) state
     - — *and* there are no alarms on the system, continue at Step 4.
   - If you were *not* directed to this procedure from another procedure, continue at Step 2.
2. Verify the state of the main controller (MC) module by entering:

   RTRV-STATE-EQPT::MC;

   The main controller (MC) module must be in-service (IS) to continue with this procedure.
   - If the system responds that the main controller (MC) module is in-service (IS), continue this procedure at Step 3.
   - If the system responds that the main controller (MC) module is out-of-service (OOS-MCOND or OOS-MTCE), try to restore it by entering:

     RST-EQPT::MC;

     If it still is out-of-service, call your system administrator or the next level of technical support.
3. Verify that no alarms exist on the system by entering:

   RTRV-ALM-NE;
   - If there are no alarms, the system responds with the following message:

     ```
       <TID #n YY-MM-DD HH:MM:SS>
     M  RTRV ALM NE:::<CTAG> COMPLD
     ;
     ```

     Continue this procedure at Step 4.

- If there are alarms, the system responds with the following message:

```
  <TID #n YY-MM-DD HH:MM:SS>
M  RTRV ALM NE:::<CTAG> COMPLD
   /* NTFCNCDE */
   " <NTFCNCDE> "
;
```

where

NTFCNCDE = the notification code: CR, indicates a critical alarm; MJ a major alarm; MN, a minor alarm.

Clear the alarms before proceeding. See Procedure 9-1, "How to Clear Alarms."

4. Decide if you need an optical cartridge.

   - If you keep a spare optical cartridge in SEC at all times, continue this procedure at Step 6.
   - If you do *not* keep a spare optical cartridge in SEC at all times, perform the following steps:

     a. Obtain a spare optical cartridge.

     b. Check that the write-protect tab is fully locked in the OFF position. If needed, refer to Figure 3-14 for the correct position of the write-protect tab.

     c. Label the optical cartridge with the target identification (TID) or other information that identifies it for use with a specific DACS III-2000 system.

     d. Continue this procedure at Step 5.

   If the write-protect tab is not fully locked OFF or if the optical cartridge has a bad sector, when you enter a command for the optical cartridge the system will respond with a DENY and/or a REPT EXCPTN SYS message. Check the write-protect tab or use another spare optical cartridge and try the command again.

5. Insert the optical cartridge into the optical drive (SEC). If you need detailed instructions, see Procedure 3-7, "Inserting Optical Cartridges." Wait 30 seconds for the cartridge to complete its "spin-up."

6. Prepare to verify the information currently on the optical cartridge by entering:

   RTRV-SYSID;

   The system responds with a message similar to the following example:

```
   <TID #n YY-MM-DD HH:MM:SS>
M  RTRV SYSID::: COMPLD
   /* MEMORY_TYPE,SIGNATURE,SYSTEM_TYPE,SYSTEM_RELEASE,TID,
       STAT,DATE,TIME */
   " SYS,PROG,DACS III-2000(2048),Release 3.0.1,,,,"
   " PRI,PROG,DACS III-2000(2048),Release 3.0.1,,,,"
   " SEC,PROG,DACS III-2000(2048),Release 3.0.1,,,,"
   " WKG,DBASE,DACS III-2000(2048),Release 3.0.1,TID,
       PRESENT,YYMMDD,HHMMSS"
   " PRI,DBASE,DACS III-2000(2048),Release 3.0.1,TID,
       PRESENT,YYMMDD,HHMMSS"
   " SEC,DBASE,UNKNOWN,UNKNOWN,UNKNOWN,UNKNOWN,UNKNOWN,UNKNOWN"
   " PRI,MAPS,DACS III-2000(2048),Release 3.0.1,TID,,
       YYMMDD,HHMMSS"
   " SEC,MAPS,UNKNOWN,UNKNOWN,UNKNOWN,,UNKNOWN,UNKNOWN"
;
```

   - If the system responds with the COMPLD message, continue this procedure at Step 7.
   - If the system responds with the DENY message, call your system administrator or the next level of technical support.

7. Check the SYS,PROG and SEC,PROG lines in the RTRV-SYSID output. The SYSTEM_TYPE and SYSTEM_RELEASE fields in these two lines should match.
   - If the SYSTEM_TYPE and SYSTEM_RELEASE fields do *not* match or the SEC,PROG line contains one or more UNKNOWNs, continue this procedure at Step 8.
   - If the SYSTEM_TYPE and SYSTEM_RELEASE fields match and the SEC,PROG line does *not* contain UNKOWN, continue this procedure at Step 10.

8. If not already formatted, format the spare optical cartridge by entering:

   CPY-MEM:::INIT,SEC,FORMAT;

   Wait for the COMPLD message before continuing.

CAUTION:
Erasure of program, database and alternate maps.
Executing the CPY-MEM command with the FORMAT option will wipe out any existing program, database or alternate map information.
Double-check that you are using the correct optical cartridge.

- If the system responds with the COMPLD message, continue this procedure at Step 9.
- If the system responds with the DENY message, call your system administrator or the next level of technical support.

9. Make a backup copy of the program (release software) from the hard disk (DISKA or DISKB) to the optical cartridge in SEC by entering:

   CPY-MEM:::PRI,SEC,PROG;

   The command takes approximately 90 seconds to complete.

   - If the system responds with the COMPLD message, continue this procedure at Step 10.
   - If the system responds with the DENY message, call your system administrator or the next level of technical support.

10. Copy the database from PRI to SEC by entering:

    CPY-MEM:::PRI,SEC,DBASE;

    This command takes approximately 40 seconds.

    - If the system responds with the COMPLD message and you use alternate maps, continue this procedure at Step 11.
    - If the system responds with the COMPLD message and you do *not* use alternate maps, continue this procedure at Step 12.
    - If the system responds with the DENY message, call your system administrator or the next level of technical support.

11. If you use alternate maps, copy the alternate maps to the optical cartridge by entering:

    CPY-MEM:::PRI,SEC,MAPS;

    This command takes approximately 40 seconds.

    - If the system responds with the COMPLD message, continue this procedure at Step 12.
    - If the system responds with the DENY message, call your system administrator or the next level of technical support.

12. Verify completion of the backups by entering:

    RTRV-SYSID;

    The system responds with a message similar to the following example:

```
  <TID #n YY-MM-DD HH:MM:SS>
M  RTRV SYSID::: COMPLD
   /* MEMORY_TYPE,SIGNATURE,SYSTEM_TYPE,SYSTEM_RELEASE,TID,
        STAT,DATE,TIME */
   " SYS,PROG,DACS III-2000(2048),Release 4,,,,"
   " PRI,PROG,DACS III-2000(2048),Release 4,,,,"
   " SEC,PROG,DACS III-2000(2048),Release 4,,,,"
   " WKG,DBASE,DACS III-2000(2048),Release 4,TID,
        PRESENT,YYMMDD,HHMMSS"
   " PRI,DBASE,DACS III-2000(2048),Release 4,TID,
        PRESENT,YYMMDD,HHMMSS"
   " SEC,DBASE,DACS III-2000(2048),Release 4,TID,
        PRESENT,YYMMDD,HHMMSS"
   " PRI,MAPS,DACS III-2000(2048),Release 4,TID,,
        YYMMDD,HHMMSS"
   " SEC,MAPS,DACS III-2000(2048),Release 4,TID,,
        YYMMDD,HHMMSS"
;
```

- If the system responds with the COMPLD message, continue this procedure at Step 13.
- If the system responds with the DENY message, call your system administrator or the next level of technical support.

13. Verify the following pieces of information in the RTRV-SYSID output:
    - — Verify that the SYS,PROG *and* SEC,PROG lines contain identical information.
    - — Verify that the DATE and TIME fields on the SEC,DBASE line match the DATE and TIME fields on the WKG,DBASE line and that the STAT field in both lines is PRESENT.
    - — If alternate maps are used, verify that the DATE and TIME fields on the PRI,MAPS and SEC,MAPS lines match.
    - If any of the information above is *incorrect*, call your system administrator or the next level of technical support.
    - If all of the information above is correct, continue this procedure at Step 14.
14. Remove the optical cartridge from the optical drive. If you need detailed instructions, see Procedure 3-8, "Removing Optical Cartridges."

Automatic Backups to Optical Cartridge

The automatic backup feature allows you to schedule the time and frequency of database and alternate map backups.

The procedure for scheduling automatic backups to optical cartridge follows.

Procedure 8-4. Scheduling Automatic Backups to Optical Cartridges

CAUTION:
Electrostatic discharge (ESD) damage.
ESD can cause damage to the components of a DACS III-2000 system.
Wear an ESD wrist strap when working around the frame.

1. Obtain a backup release cartridge or spare optical cartridge and check that the write-protect tab is fully locked in the OFF position. If needed, refer to Figure 3-14 for the correct position of the write-protect tab.
2. Insert the optical cartridge. If you need detailed instructions, see Procedure 3-7, "Inserting Optical Cartridges."
3. If SEC is in the out-of-service fault (OOS-FLT) state, ready the optical cartridge by entering:

   RST-EQPT::SEC;

   Wait for the COMPLD message before continuing.
4. Read the following caution, then, if needed, format the optical cartridge by entering:

   CPY-MEM:::INIT,SEC,FORMAT;

   Wait for the COMPLD message before continuing.

CAUTION:
Erasure of system program, database, and alternate maps (if used).
Executing the CPY-MEM command with the FORMAT option will wipe out the existing program, database and alternate maps on a manufactured release cartridge.
Perform this step **only** *if you have a new, unformatted, optical cartridge.*

5. Determine the backup scheduling needs for your system. Daily database backup to optical cartridge is recommended.

6. Supply the scheduling information to the DACS III-2000 system by entering:

   SCHED-BKUP-MEM::::FMEM,,TMEM:MEMCL:INVL, STADAT,STATM;

   where

   FMEM = the memory from which the data is to be copied (PRI); PRI specifies the primary storage systems, namely, the two hard disk drives (DISKA and DISKB). The system will autonomously choose whether to use DISKA or DISKB.

   TMEM = the memory to which the data is to be copied, the optical drive (SEC)

   MEMCL = the class of memory to be copied; options are the database (DBASE), alternate maps (MAPS), or both (BOTH)

   INVL = the time interval between scheduled backups in days; expressed as 1-DAY, 2-DAY...7-DAY

   STADAT= the starting date when the first scheduled backup takes place; expressed as SU, MO, TU, WE, TH, FR, or SA.

   STATM = the starting time for the backup schedule; expressed as {0-23}-{0-59}

   For example, you can ask for backups of the database and alternate maps (if used) every two days starting on Monday at 1:30 a.m. by entering:

   SCHED-BKUP-MEM::::PRI,,SEC:BOTH:2-DAY,MO,1-30;

   - If the system does not respond with the COMPLD message, check the error codes in Appendix C. Try to reenter the command or call your system administrator or next level of technical support for assistance, if necessary.
   - If the system responds with the COMPLD message, the scheduling of optical cartridge backups is complete. However, scheduled backups cannot take place unless a writable optical cartridge is present in the optical drive and the optical drive is in the restored state. Both conditions will be reported by a REPT BKUP message when a copy is executed.

7. Verify that the automatic backup is scheduled by entering:

   RTRV-BKUPSCHED-MEM:;

   The system responds with output similar to the example that follows:

```
  <TID #n YY-MM-DD HH:MM:SS>
M  RTRV BKUPSCHED MEM::::PRI,,SEC COMPLD
   /* :FROMMEM,,TOMEM:MEMCLASS:INVL,BKUPDAT,BKUPTM */
   " :PRI,,SEC:BOTH:1-DAY,93-4-23,14-19: "
;
```

Fan Units

Fan units are found only in a DACS III-2000 (2048) system. One of two types of fan units may be installed in your system: the fan unit that was available prior to Release 3.0 (called the standard fan unit); and the fan unit introduced as an option at the same time as Release 3.0 (called the high performance fan unit). The high performance fan unit also works with earlier releases.

The routine maintenance procedure for the standard fan unit is included in this section.

The high performance fan unit has an alarm LED that alerts you to the existence of a clogged fan filter; therefore, no routine maintenance is required. A trouble-clearing procedure for a clogged filter (INT condition type) in a high performance fan unit is included in Chapter 9, "Troubleclearing—General."

Standard Fan Unit (ED2C906-30,G1)

Perform the following procedure noting that the fuse numbers outside of the parentheses refer to Bay 5; those within parentheses refer to Bay 6.

Execute the entire procedure twice: once for the fan unit in Bay 5; once for the fan unit in Bay 6.

Replace the fan filter (WP91473,L100; COMCODE 405470808) every three months, or more often if the filter accumulates dirt.

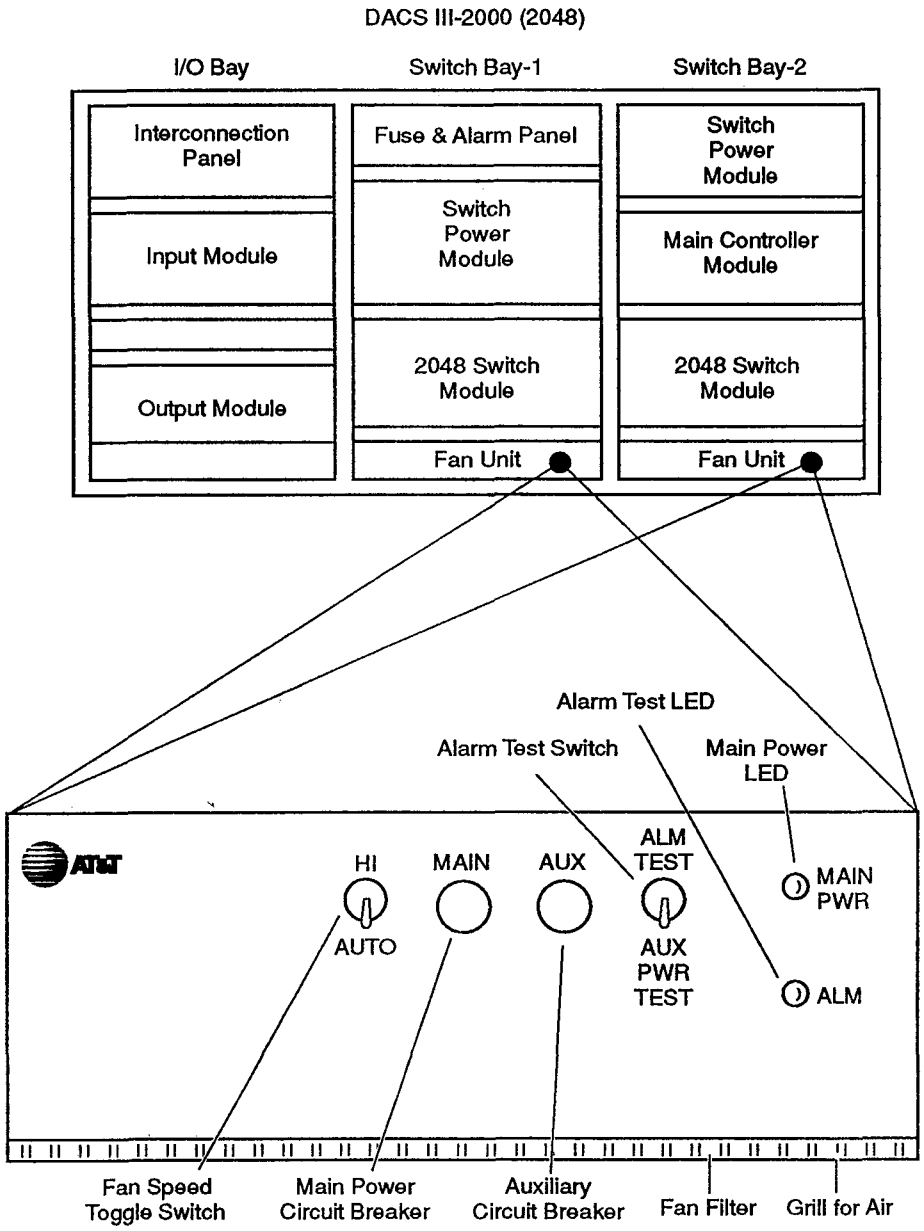

Figure 8-11. Standard Fan Unit (ED2C906-30,G1)

Procedure 8-5. Maintaining Standard (ED2C906-30,G1) Fan Units

CAUTION:
Moving fan blades.
Lack of protection guard could lead to injury from rotating fan blades.
Use caution when removing and inserting the air filters.

CAUTION:
Electrostatic discharge (ESD) damage.
ESD can cause damage to the components of a DACS III-2000 system.
Wear an ESD wrist strap when working around the frame.

1. Open cover on fuse and alarm panel by pushing on the upper left and right corners to disengage latches.
2. Locate fuses B9-2 (J9-2) and E6 (E7) from the table on the inside cover of the panel.
3. Remove B9-2 (J9-2), then E6 (E7) fuses from the fuse block by turning the fuse holder in the counterclockwise direction.
4. You now have 30 minutes to replace the filter and power up the fan unit under normal operating conditions. After 30 minutes, the shelf temperature may get too hot.
5. Store fuses in a safe location.
6. The main power and alarm LEDs should be off. If either LED is lit, please review above procedure. The fan unit in Bay 5 (6) is now disabled.
7. Wait two minutes for fan blades to stop rotating.
8. Remove the air filter. Figure 8-11 shows the filter location. It may be necessary to gently pry on the sides of the filter with a screwdriver.
9. Check that nothing is restricting the air flow. Replace the air filter.
10. Reinsert the air filter following the direction of the arrow on the filter; the arrow indicates air flow. Leave approximately an inch of the filter protruding out of the fan unit. This helps you remove the filter in the future.
11. Ensure that the air inlet below the fan assembly is unobstructed. Figure 8-11 shows the air inlet location.
12. Install fuses E6 (E7), then B9-2 (J9-2) by rotating fuse holder in a clockwise direction. Orient the fuse holder tabs with respect to detents in fuse block before inserting.
13. The main power LED should be lighted and the ALARM LED off for normal operation. Review procedures above if the LEDs differ from normal operation.

14. Verify that the fan unit is operational by doing the following:

    a. Place the fan speed selection toggle switch in the AUTO position.

    b. Place the fan speed selection toggle switch in the HI position.

    When the switch is in the AUTO position, the fans operate at a reduced speed if the air temperature is 90°F or below. For a temperature of 90°F or higher, the fans automatically go to full speed operation. When the switch is in the HI position, the fans operate at maximum speed continuously.

15. Lift the alarm test switch to the ALM TEST position to perform the alarm failure test. Hold the switch for approximately 10 seconds; this simulates the failure of one fan in the unit.

16. Check for the following five actions to occur:

    - The red alarm LED on the fan unit lights.
    - The remaining 2 fans operate at HIGH speed.
    - The red MAJOR alarm LED on the status panel of the main controller (MC) module lights. This does not occur if there is an active major alarm condition.
    - The system outputs one of the following messages:

      — For *Message Set 1*:

```
  <TID #n YY-MM-DD HH:MM:SS>
* <ASEQ> REPT ALM EQPT
   /* LOC:NTFCNCDE,CONDTYPE,SRVEFF:TROUBLE */
   " FAN-<x>: MJ,INT,NSA:ISO "
;
```

      — For *Message Set 2*:

```
  <TID YY-MM-DD HH:MM:SS>
* <ASEQ> REPT ALM EQPT
    " FAN-<x>: MJ,INT,NSA,,,,::,ISO "
;
```

      where

      x = the fan unit number; 1 or 2

    - After approximately 20 seconds, the red MAJOR alarm LED on the status panel goes out. The system outputs one of the following alarm cleared messages:

      — For *Message Set 1*:

```
  <TID #n YY-MM-DD HH:MM:SS>
* <ASEQ> REPT ALM EQPT
   /* LOC:NTFCNCDE,CONDTYPE,SRVEFF:TROUBLE */
   " FAN-<x>: CL,INT,NSA:ISO "
;
```

— For *Message Set 2*:

```
  <TID YY-MM-DD HH:MM:SS>
* <ASEQ> REPT ALM EQPT
   " FAN-<x:> CL,INT,NSA,,,,::,ISO "
;
```

where

x = the fan unit number; 1 or 2

- If any of the five actions outlined in this step did not occur, refer the failure to the installation group.
- If all actions occur as described, the alarm failure test passed successfully.

17. Lower the alarm test switch to the AUX PWR TEST position to test the auxiliary power. Hold the switch for approximately 10 seconds; this simulates the failure of the main power supply feeding the fan unit.
18. Check for the following five actions to occur.
    - The red alarm LED on the fan unit lights.
    - The fans in the unit operate at HIGH speed.
    - The red MAJOR alarm LED on the status panel of the main controller (MC) module lights. This does not occur if there is an active major alarm condition.
    - The system outputs one of the following messages:

      — For *Message Set 1*:

```
  <TID #n YY-MM-DD HH:MM:SS>
* <ASEQ> REPT ALM EQPT
   /* LOC:NTFCNCDE,CONDTYPE,SRVEFF:TROUBLE */
   " FAN-<x>: MJ,INT,NSA:ISO "
;
```

      — For *Message Set 2*:

```
  <TID YY-MM-DD HH:MM:SS>
* <ASEQ> REPT ALM EQPT
   " FAN-<x>: MJ,INT,NSA,,,,::,ISO "
;
```

      where

      x = the fan unit number; 1 or 2

- After approximately 20 seconds, the red MAJOR alarm LED on the status panel goes out. The system outputs one of the following alarm cleared messages:

  — For *Message Set 1*:

```
  <TID #n YY-MM-DD HH:MM:SS>
* <ASEQ> REPT ALM EQPT
   /* LOC:NTFCNCDE,CONDTYPE,SRVEFF:TROUBLE */
   " FAN-<x>: CL,INT,NSA:ISO "
;
```

  — For *Message Set 2*:

```
  <TID YY-MM-DD HH:MM:SS>
* <ASEQ> REPT ALM EQPT
   " FAN-<x:> CL,INT,NSA,,,,::,ISO "
;
```

  where

  x = the fan unit number; 1 or 2

- If any of the five actions outlined in this step did not occur, refer the failure to the installation group.
- If all actions occur as described, the auxiliary power test passed successfully.

19. Repeat the entire procedure for the second fan unit.

Troubleclearing—General

9

Contents

Error Detection 9-2

Problems Identified Through Alarms 9-3

Procedure 9-1.
How to Clear Alarms 9-3

Procedure 9-2.
Clearing AISFRAMED, AISUNFRAMED, ISD, MON, and MRB Condition Types 9-11

Procedure 9-3.
Clearing LOF, LSSIG, LOS, T+BPV, T-BERL, and INDET Condition Types 9-12

Procedure 9-4.
Clearing BADLBO Condition Type 9-13

Procedure 9-5.
Clearing BADPRMTR Condition Type 9-17

Procedure 9-6.
Clearing IMPROPRMVL Condition Type 9-18

Procedure 9-7.
Clearing INHSWPR Condition Type 9-20

Procedure 9-8.
Clearing INHSWWKG Condition Type 9-21

Procedure 9-9.
Clearing INT Condition Type on Main Controller (MC) Module Circuit Packs 9-23

Contents

Procedure 9-10.
Clearing INT or MISC [100] Condition Types on Input or Output Interface Circuit Packs 9-25

Procedure 9-11.
Clearing INT or MISC [100] Condition Types on DS3SW Circuit Packs 9-27

Procedure 9-12.
Clearing INT Condition Type on DS3PROTN and STS1PROTN Circuit Packs 9-29

Procedure 9-13.
Clearing INT Condition Type on Standard Fan Units 9-31

Procedure 9-14.
Clearing INT Condition Type on High Performance Fan Units 9-34

Procedure 9-15.
Clearing INT Condition Type and Other PWRA (552A) Failures in Input, Output, or DS3SW Modules 9-38

Procedure 9-16.
Clearing INT Condition Type on PWRA2 (566A) Circuit Packs in Input, Output, and DS3SW Modules 9-43

Procedure 9-17.
Clearing INT Condition Type and Other PWRB, PWRC, and PWRD Failures in Main Controller Modules 9-67

Procedure 9-18.
Clearing INT Condition Type on Unit Controllers (UC) 9-69

Procedure 9-19.
Clearing INT Condition Type on Input and Output Interface Circuit Packs, and a Unit Controller (UC) 9-70

Procedure 9-20.
Clearing MAN Condition Type 9-73

Procedure 9-21.
Clearing MISC [1] Condition Type 9-75

Procedure 9-22.
Clearing MISC [2] Condition Type 9-76

Procedure 9-23.
Clearing TODC Condition Type 9-77

Contents

Procedure 9-24.
Clearing EXTERR Condition Type 9-78

Procedure 9-25.
Clearing FRD Condition Type 9-79

Procedure 9-26.
Clearing HITEMP Condition Type 9-81

Problems Not Identified Through Alarms 9-82

Procedure 9-27.
Clearing Blown Primary (-48V) Fuse for BUS E 9-82

Procedure 9-28.
Clearing Blown Primary (-48V) Fuse
for All Other BUSes Except BUS E 9-83

Procedure 9-29.
Clearing Blown Secondary Fuse in
Main Controller (MC) Module 9-91

Procedure 9-30.
Clearing Blown Secondary Fuse in Switch Power Modules 9-93

Procedure 9-31.
Responding to REPT CMPR MEM Message 9-98

Procedure 9-32.
Responding to REPT EXCPTN SYS 9-100

Procedure 9-33.
Clearing Transmission Problems Reported by Personnel 9-102

Contents

Procedure 9-34.
Replace an FBE Fuse Board in the MC 9-106

Procedure 9-35.
Clearing DEPROVSLOT 9-110

Troubleclearing—General

9

This chapter is separated into three sections:

- error detection

  This section provides an overview of the various ways the DACS III-2000 system alerts you to problems.

- problems identified through alarms

  This section begins with the procedure "How to Clear Alarms," which is designed to be used as a road map for locating the specific procedure needed to correct your problem.

- problems not identified through alarms

  This section contains procedures that cover situations where alarms may not be present but action on your part is required:

  — fuse problems

  — REPT CMPR MEM messages

  — REPT EXCPTN SYS message

  — transmission problems reported by personnel

Error Detection

The DACS III-2000 system detects errors and announces them through light emitting diodes (LEDs), alarms, report (REPT) messages, and frame audits.

Alarms

There are three levels of office alarms:

Critical — which are programmable and appear for service-affecting conditions

Major — which appear for all service-affecting failures, controller failures, and power feed failures. A main controller module failure initiates a processor major alarm in addition to the major alarm.

Minor — which appear for non-service-affecting failures and certain abnormal conditions

There are three ways that alarms are indicated:

- visually, via alarm LEDs
- audibly, via office alarms
- written, via messages at the craft interface terminal

With messages, there are two parameters which carry alarm information: the alarm code parameter and the alarm notification code parameter. Table 9-1 lists the parameters for the various alarm levels.

Table 9-1. Alarm Levels and Related Output Message Parameters

Alarm Level	Alarm Code Parameter	Notification Code Parameter
Critical	*C	CR
Major	**	MJ
Minor	*	MN
No alarm	A	NA
Cleared alarm	A	CL

Problems Identified Through Alarms

Responding to problems identified through alarms involves two important tasks: the first is to enter RTRV commands (presented in Procedure 9-1) and check the resulting messages; the second is to prioritize alarm clearance (presented in Table 9-2). Condition types, reported in the messages, point you to a specific procedure, described in this chapter, that is designed to clear the alarm or direct you to support personnel who can assist in clearing the alarm.

Procedure 9-1. How to Clear Alarms

1. Check to see if you have a craft interface terminal connected to the frame.
   - If a terminal is connected, continue this procedure at Step 2.
   - If a terminal is not connected, find one and connect it. If you need detailed instructions, see Procedure 6-3, "Adding Craft Interface Terminals."
2. Verify that the alarm is on the network element, that is your DACS III-2000 system, by entering:
   — For *Message Set 1*:

   RTRV-ALM-NE;

   — For *Message Set 2*:

   RTRV-ALM-COM;

   The system responds with one of the following messages:

   Message Set 1:

```
  <TID #n YY-MM-DD HH:MM:SS>
M  RTRV ALM NE:::<CTAG> COMPLD
   /* NTFCNCDE */
   " <NTFCNCDE> "
;
```

   Message Set 2:

```
  <TID YY-MM-DD HH:MM:SS>
M  RTRV ALM COM:::<CTAG> COMPLD
   " <NTFCNCDE,CONDTYPE,SRVEFF> "
;
```

   The main reasons for performing the RTRV-ALM-NE or RTRV-ALM-COM command are to determine if the main controller (MC) module is in-service and to see what is currently the highest alarm level on the frame.

   - If the message from RTRV-ALM-NE or RTRV-ALM-COM is `DENY` with the not in-service (`SNIS`) error code, bring the system into service by entering:

RST-EQPT::MC;

If the system still remains out-of-service, call your system administrator or the next level of technical support.

- If there is no communication at all, there may be a problem with the EC12 (or EC15) circuit pack; see Procedure 9-9, "Clearing INT Condition Type on Main Controller (MC) Module Circuit Packs."

3. Check for the number of active alarms and note the reported alarm levels for each alarm by entering the following RTRV commands:

   — **RTRV-ALM-{EC1|T3};**

   A sample system response from *Message Set 1* follows:

```
  <TID #n YY-MM-DD HH:MM:SS>
M  RTRV ALM {EC1|T3}::<CTAG:NOCD,COTY,SRV> COMPLD
   /*  LOC:NTFCNCDE,CONDTYPE,SRVEFF */
   "  <LOC:NTFCNCDE,CONDTYPE,SRVEFF> */
;
```

   — **RTRV-ALM-LINK;**

   A sample system response from *Message Set 1* follows:

```
  <TID #n YY-MM-DD HH:MM:SS>
M  RTRV ALM LINK::<ELOC:CTAG:NOCD,COTY,SRV> COMPLD
   /* LOC:NTFCNCDE,CONDTYPE,SRVEFF */
   " <LOC:NTFCNCDE,CONDTYPE,SRVEFF> */
;
```

   — **RTRV-ALM-EQPT;**

   A sample system response from *Message Set 1* follows:

```
  <TID #n YY-MM-DD HH:MM:SS>
M  RTRV ALM EQPT::<ELOC:CTAG:NOCD,COTY,SRV> COMPLD
   /* LOC:NTFCNCDE,CONDTYPE,SRVEFF */
   " <LOC:NTFCNCDE,CONDTYPE,SRVEFF> */
;
```

   - If there is only one active alarm, note the condition type (COTY) and continue this procedure at Step 6. (You may need to re-enter the appropriate RTRV command if the information has scrolled off the screen or if there was a lot of information to view.)
   - If there are multiple alarms, note the reported alarm levels and continue this procedure at Step 4.

4. Using Table 9-2, determine which alarm should be cleared first; remember the highest level alarm condition must be cleared first.

   In the event of multiple alarms, once the first alarm is cleared you need to return to Step 2 and identify the next alarm to be cleared. *Repeat Steps 2 through 5 until all alarms have been cleared from the frame.*

The following table is based on three criteria: the priority of the alarms—major (MJ), or minor (MN); whether the alarm is service-affecting (SA) or not (NSA); and the part of the system that has the alarm, for example, equipment (EQPT).

Table 9-2. Prioritizing Alarm Clearance

Alarm Level	Service Affecting Status	Segment of System	Priority
MJ	SA	equipment (EQPT)	1st
MJ	SA	port (EC1 or T3)	2nd
MN	SA	port (EC1 or T3)	3rd
MJ	NSA	equipment (EQPT)	4th
MN	NSA	equipment (EQPT)	5th
MJ	NSA	port (EC1 or T3)	6th
MN	NSA	port (EC1 or T3)	7th

5. Locate and write down the condition type (COTY) in the retrieve (RTRV) message whose alarm has the highest clearance priority. (You may need to re-enter the appropriate RTRV command if the information has scrolled off the screen or if there was a lot of information to view.)

   Repeat this step for each alarm.

   When multiple alarms are present on the frame, equipment alarms with a path integrity (PAINTGRT) condition type should be cleared *last*. The reasons for clearing all other alarms first are

   - other condition types, for example IMPROPRMVL and INT, are of higher priority than PAINTGRT
   - the clearing of a PAINTGRT condition type may not be detected because of the presence of another condition type
   - resources such as the protection switch circuit packs, which are required for clearing PAINTGRT, may be unavailable due to the presence of other alarms

   Clearing other equipment alarms prior to clearing PAINTGRT alarms will ensure that the correct PAINTGRT clearing procedure is used and the necessary equipment resources are available for use by those procedures.

6. Select from the following choices:
   - If either the RTRV-ALM-{EC1|T3} or the RTRV-ALM-LINK message provided the information about the alarm with the highest clearance priority, continue this procedure at Step 7.
   - If the RTRV-ALM-EQPT message provided the information about the alarm with the highest clearance priority, continue this procedure at Step 8.
7. Determine which troubleclearing procedure is needed by referring to Table 9-3, "RTRV-ALM-{EC1|T3} and RTRV-ALM-LINK Decision Tree." Once you have identified the correct procedure, find the procedure and follow the steps in the order presented.
8. Determine which troubleclearing procedure to use by referring to Table 9-4, "RTRV-ALM-EQPT Decision Tree." Once you have identified the correct procedure, find the procedure and follow the steps in the order presented.

Table 9-3. RTRV-ALM-{EC1 | T3} and RTRV-ALM-LINK Decision Tree

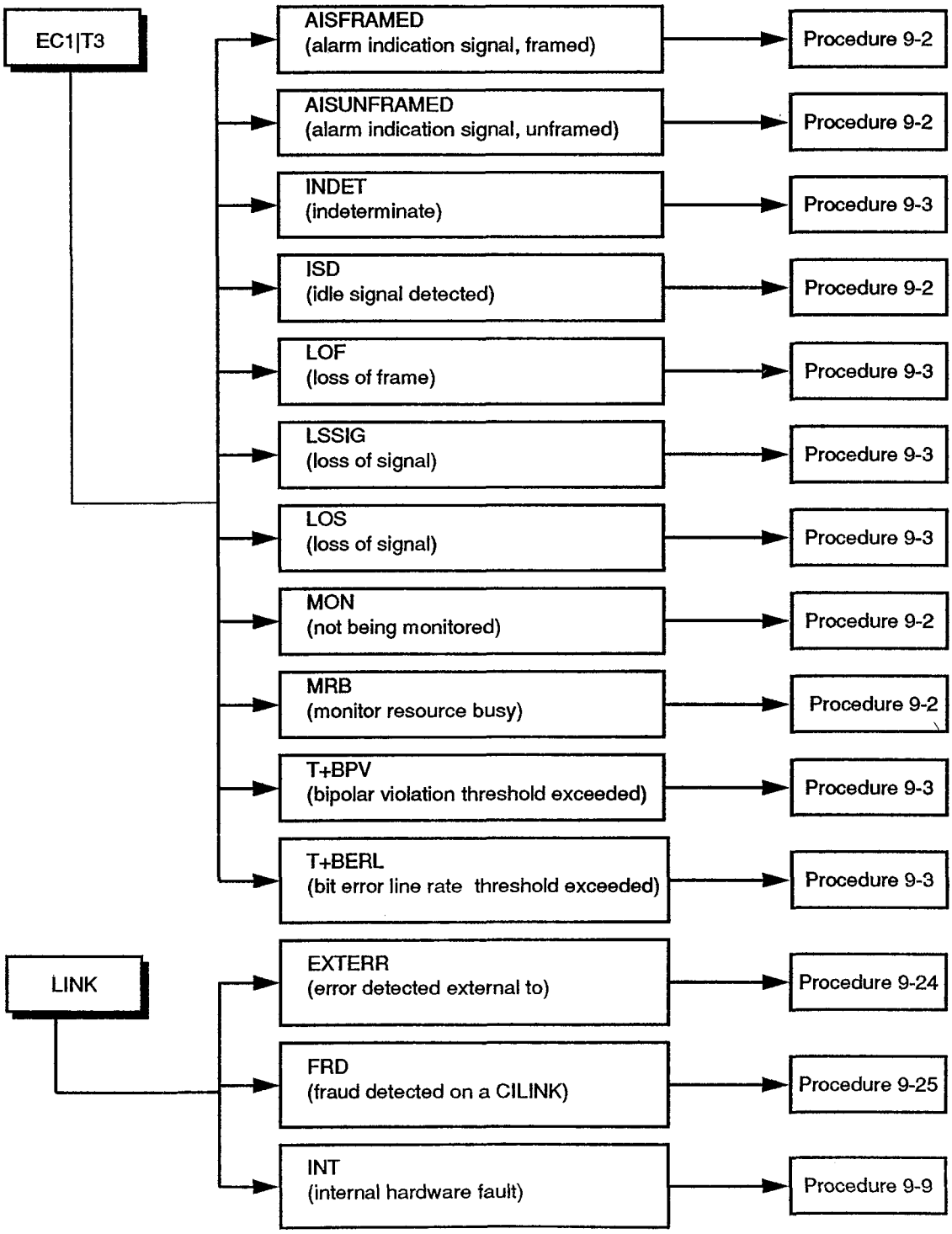

Table 9-4. RTRV-ALM-EQPT Decision Tree

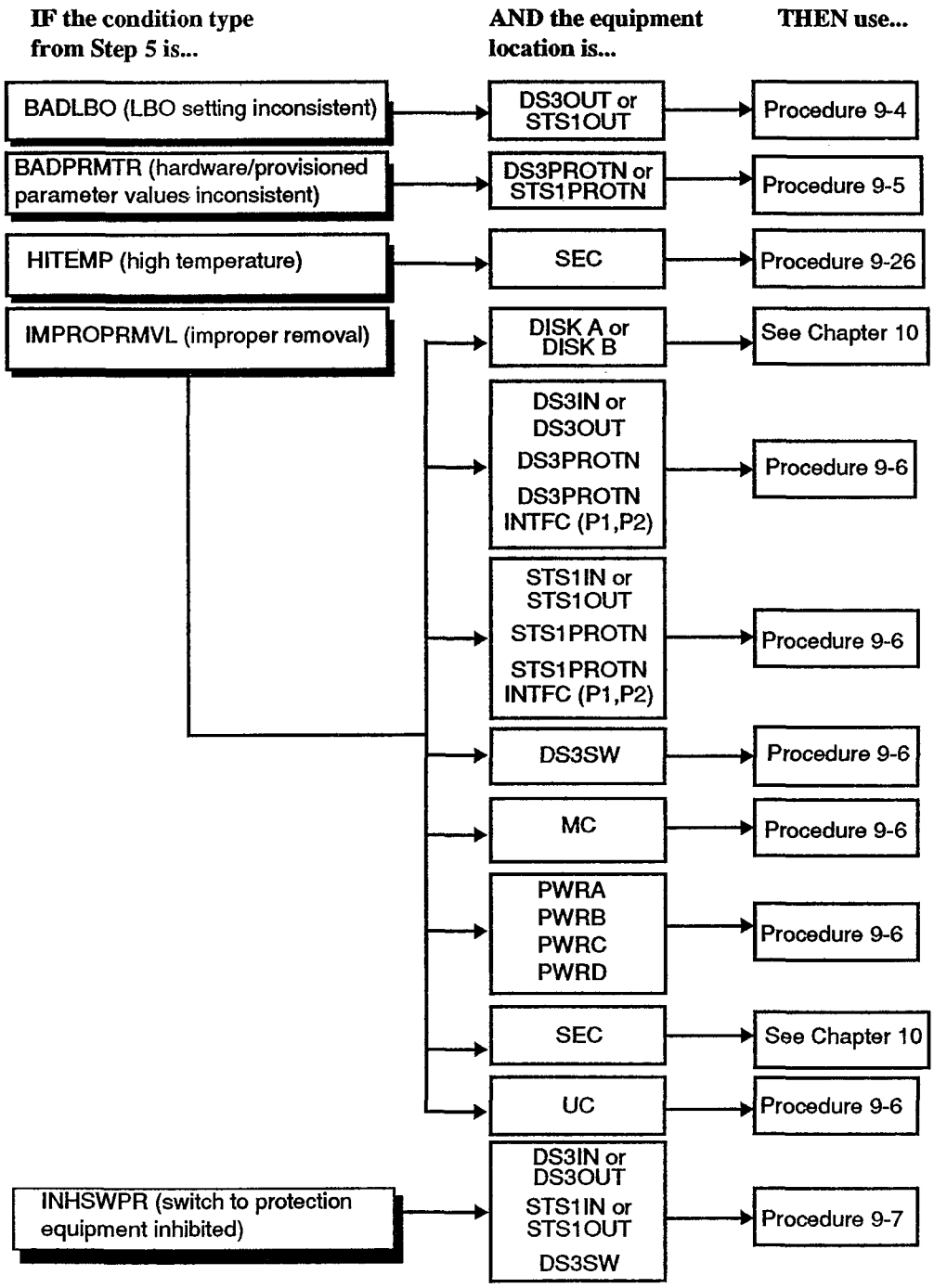

Table 9-4. RTRV-ALM-EQPT Decision Tree (continued)

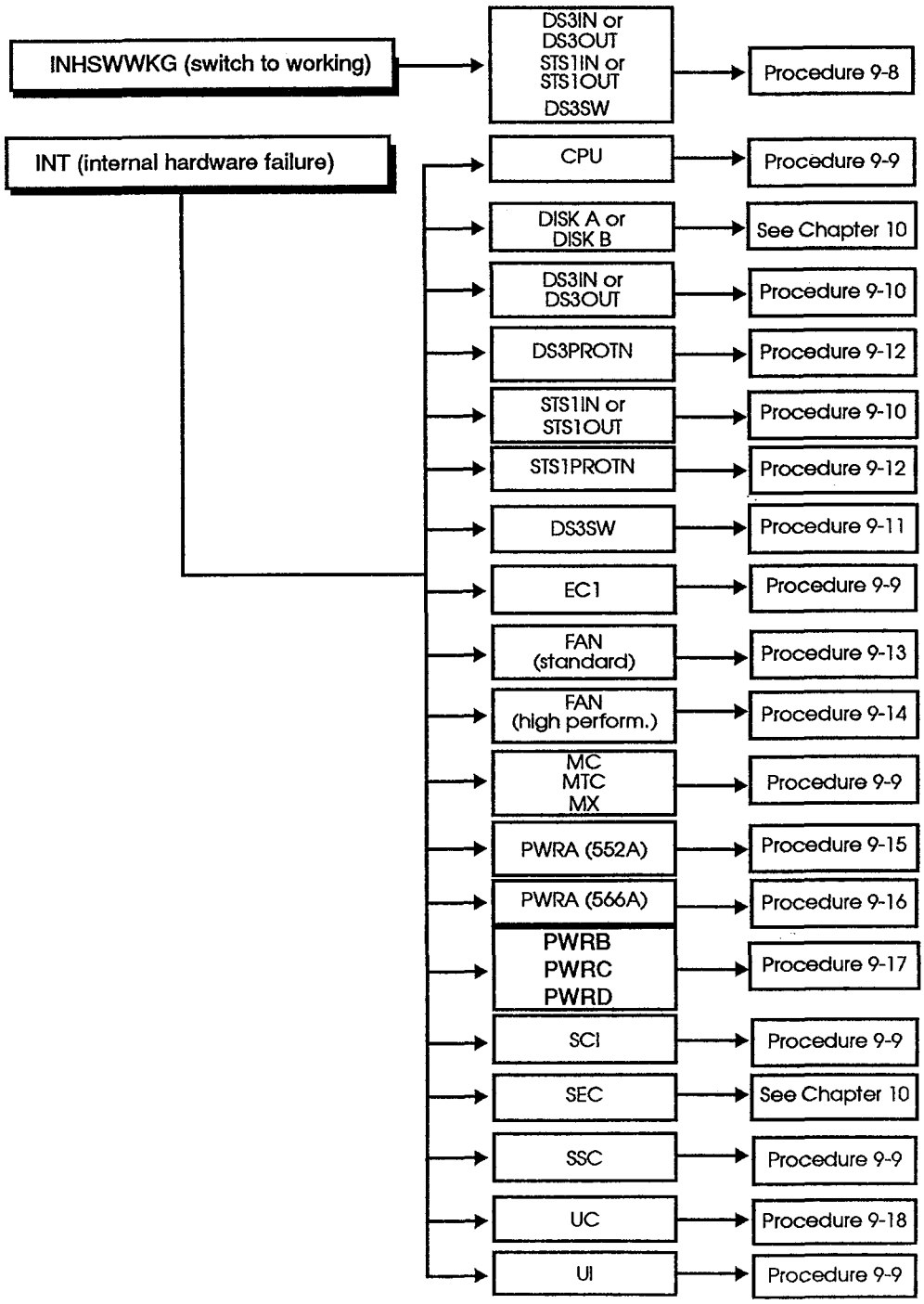

Table 9-4. RTRV-ALM-EQPT Decision Tree (continued)

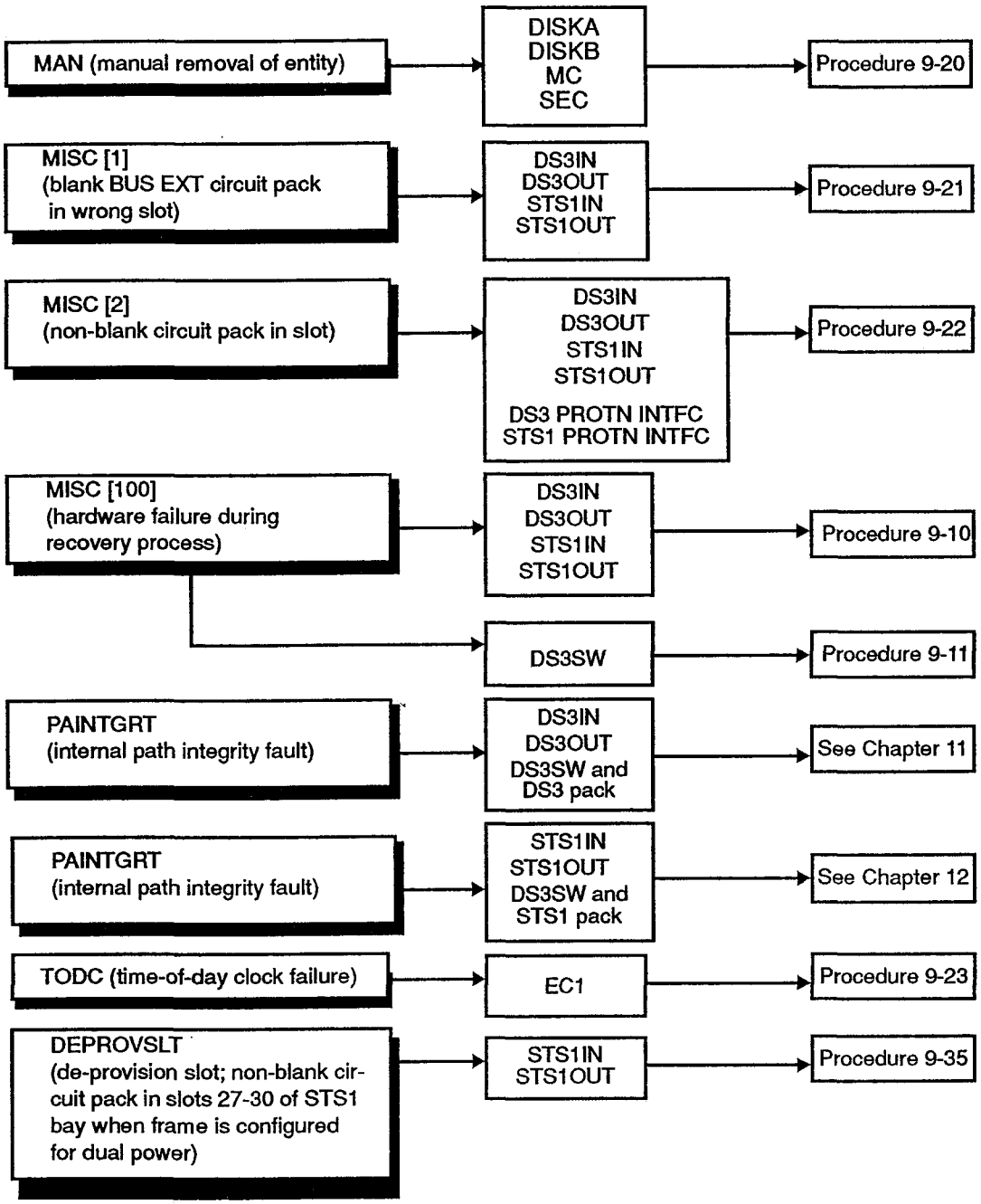

AISFRAMED, AISUNFRAMED, ISD, MON, and MRB

The condition types AISFRAMED, AISUNFRAMED, and ISD typically occur when the far end equipment has a problem. MON and MRB typically occur when there is an internal problem.

Procedure 9-2. Clearing AISFRAMED, AISUNFRAMED, ISD, MON, and MRB Condition Types

CAUTION:
Electrostatic discharge (ESD) damage.
ESD can cause damage to the components of a DACS III-2000 system.
Wear an ESD wrist strap when working around the frame.

- If the condition type is AISFRAMED, AISUNFRAMED, or ISD, contact the far end office or your internal support people to resolve the problem.
- If the condition type is MRB, call your system administrator or the next level of technical support.
- If the condition type is MON, replace the ARW8 circuit pack. If you need detailed replacement instructions, see Procedure 3-2, "Removing Circuit Packs" and Procedure 3-1, "Installing Circuit Packs."
- If more alarms exist on the frame, return to Procedure 9-1, "How to Clear Alarms" to determine the next corrective action to take.

LOF, LSSIG, LOS, T+BPV, T-BERL, and INDET

The condition types LOF, LSSIG, LOS, T+BPV, T-BERL, and INDET typically occur when there is a problem with the cables connecting your DACS III-2000 system to the near end equipment. A flashing red alarm LED on an input or output circuit pack indicates an incoming signal failure.

The LSSIG and T+BPV condition types appear in *Message Set 1* only. The LOS and T-BERL condition types are their *Message Set 2* equivalents, and appear in *Message Set 2* only.

The procedure for correcting the problem follows.

Procedure 9-3. Clearing LOF, LSSIG, LOS, T+BPV, T-BERL, and INDET Condition Types

1. Look at the office records to determine the source, that is the specific cable, of the incoming signal.
2. Issue a trouble report to the system administrator, or next level of technical support, who manages the equipment that is the source of the incoming signal.
3. If more alarms exist on the frame, return to Procedure 9-1, "How to Clear Alarms" to determine the next corrective action to take.

BADLBO

The condition type BADLBO occurs when the LBO setting read from the circuit pack is different from the software LBO setting in the software database.

The procedure to correct the problem follows.

Procedure 9-4. Clearing BADLBO Condition Type

CAUTION:
Electrostatic discharge (ESD) damage.
ESD can cause damage to the components of a DACS III-2000 system.
Wear an ESD wrist strap when working around the frame.

1. Retrieve the two values that the system has in the software database (circuit pack LBO and software database LBO) by entering:

   RTRV-PRMTR-EQPT::<ELOC>;

   where

   ELOC = the output interface circuit pack associated with the alarm, identified as {STS1OUT|DS3OUT}-unit-slot. Allowable values for unit are 1 through 4 on a 1024-size system or 1 through 8 on a 2048-size system; slot, 1 through 30, P1 or P2.

2. Determine which setting is correct using the following tables: Table 9-5 shows the LBO settings for connections to a DSX-3, and Table 9-6 shows the LBO settings for connections to terminal equipment.

Table 9-5. LBO Settings for Connections to DSX-3

Cable Type	Length Limitations	LBO Setting
734A (728B)	0 to 225 ft. >225 to 450 ft.	IN OUT
735A	0 to 125 ft. >125 to 250 ft.	IN OUT
KS-19224,L2	0 to 75 ft. >75 to 150 ft.	IN OUT

Table 9-6. LBO Setting for Connections to Terminal Equipment

Cable Type	Length Limitations	LBO Setting
734A (728B)	0 to 225 ft. >225 ft. to <675 ft. 675 to 900 ft.	IN IN *or* OUT OUT
735A	0 to 125 ft. >125 ft. to <375 ft. 375 to 500 ft.	IN IN *or* OUT OUT
KS-19224,L2	0 to 75 ft. >75 ft. to <225 ft. 225 to 300 ft.	IN IN *or* OUT OUT

- If you are checking a protection output interface circuit pack, set all jumpers to the OUT position shown in Figure 9-1.
- If the software value is correct, remove the output circuit pack and change its line buildout (LBO) jumpers. Figure 9-1 shows the OUT settings; Figure 9-2 shows the IN settings. If you need detailed instructions on the removal or insertion of circuit packs, see Procedure 3-2, "Removing Circuit Packs" and Procedure 3-1, "Installing Circuit Packs."
- Remember there are 17 LBO jumpers that need to be changed, two LBO jumpers per port and one LBO jumper that the software uses to identify the LBO setting.
- If the hardware value is correct, read the LBO value from the circuit pack and update the software database so the circuit pack value and the software value are identical in the database by entering:

  ED-PRMTR-EQPT::ELOC::,INIT;

  where

  ELOC = the output interface circuit pack identified in Step 1.

3. Retrieve the new values by entering:

   RTRV-PRMTR-EQPT::ELOC;

   and verify that they are the values desired.

   - If the values are not correct, repeat this procedure from Step 2.

4. If more alarms exist on the frame, return to Procedure 9-1, "How to Clear Alarms" to determine the next corrective action to take.

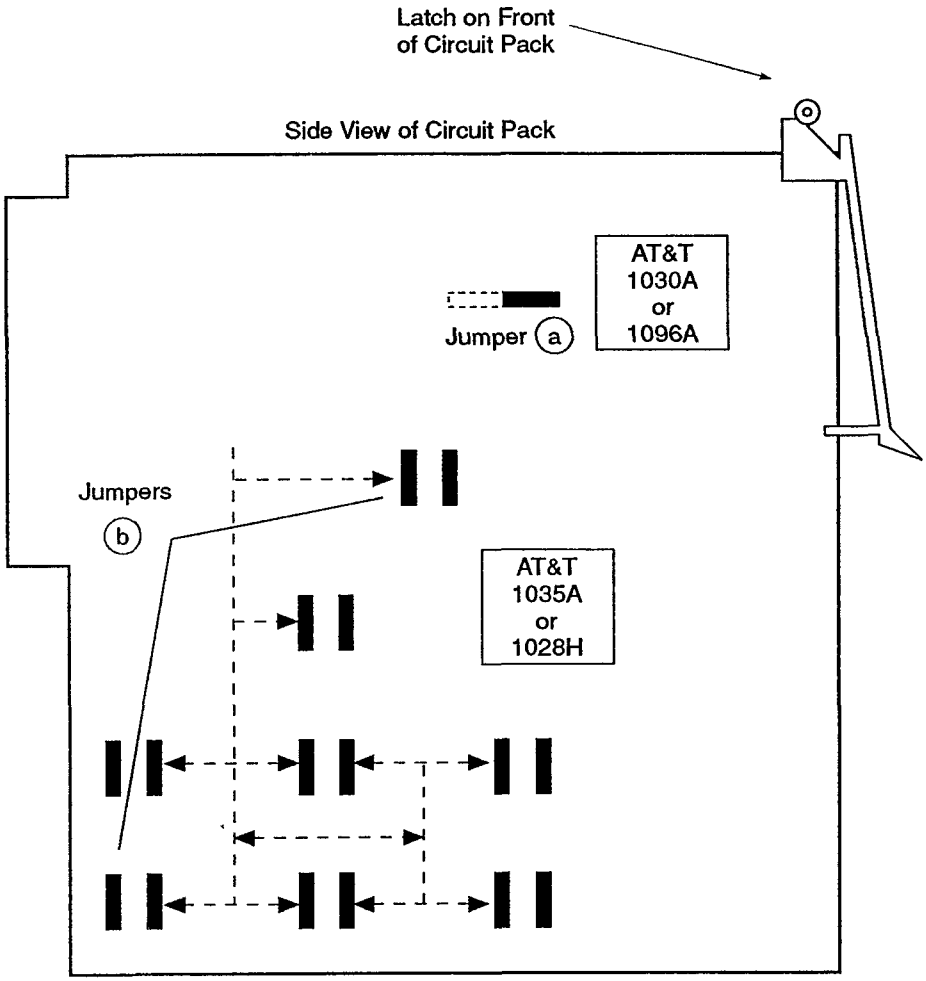

a Jumper must be positioned to the right.

b Sixteen (16) jumpers must be positioned vertically.

Figure 9-1. Line Buildout OUT Settings

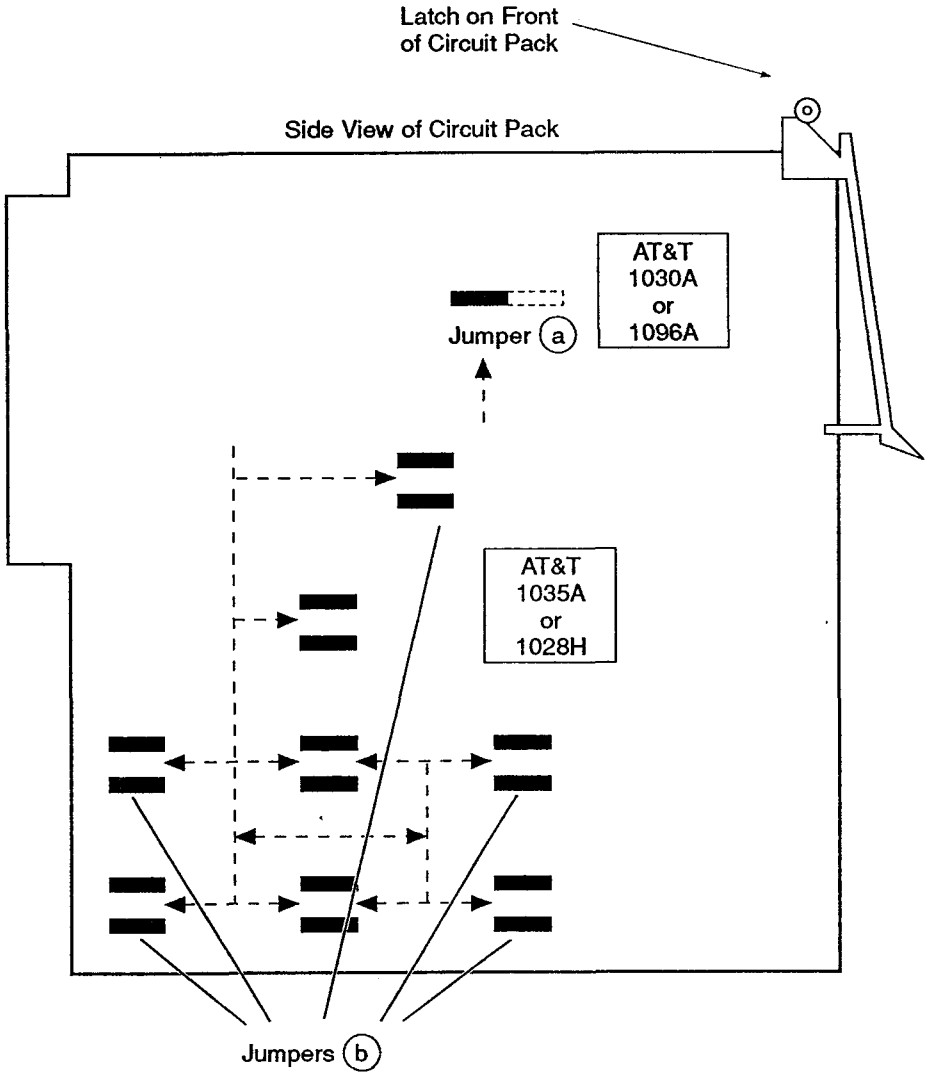

a Jumper must be positioned to the left.

b Sixteen (16) jumpers must be positioned horizontally.

Figure 9-2. Line Buildout IN Settings

BADPRMTR

The condition type BADPRMTR occurs when the circuit pack code name value read from the circuit pack is different than the software circuit pack code name value stored in the software database.

The procedure to correct the problem follows.

Procedure 9-5. Clearing BADPRMTR Condition Type

CAUTION:
Electrostatic discharge (ESD) damage.
ESD can cause damage to the components of a DACS III-2000 system.
Wear an ESD wrist strap when working around the frame.

1. Retrieve the two values that the system has in the software database (circuit pack code name value and software code name value) by entering:

   `RTRV-PRMTR-EQPT::ELOC;`

   where

   `ELOC` = the output interface circuit pack associated with the alarm

2. Decide which value is correct by determining which circuit pack is *currently* in the frame and which circuit pack *should be* in the frame.

   - If the software code name value is correct, remove the current circuit pack and substitute the appropriate pack. If you need detailed instructions on the removal or insertion of circuit packs, see Procedure 3-2, "Removing Circuit Packs" and Procedure 3-1, "Installing Circuit Packs."
   - If the circuit pack code name value is correct, read the code name value from the pack and update the software database so the circuit pack code name value and the software code name value are identical in the database by entering:

     `ED-PRMTR-EQPT::ELOC::INIT;`

     where

     `ELOC` = the output interface circuit pack identified in Step 1

3. If more alarms exist on the frame, return to Procedure 9-1, "How to Clear Alarms" to determine the next corrective action to take.

IMPROPRMVL

The condition type IMPROPRMVL indicates that the specified equipment, whose location is shown in the RTRV-ALM-EQPT message, has been physically removed from its slot. This condition type is also output if any unit controller (UC) is removed from service via the RMV-EQPT::ELOC; command.

The procedure to correct this problem follows.

Procedure 9-6. Clearing IMPROPRMVL Condition Type

CAUTION:
Electrostatic discharge (ESD) damage.
ESD can cause damage to the components of a DACS III-2000 system.
Wear an ESD wrist strap when working around the frame.

1. Reinsert the circuit pack into its slot.
   - If the circuit pack was an input, output, PROTN, PROTN INTFC, or DS3SW, continue this procedure at Step 2.
   - If the circuit pack was a PRI3 or SEC3 circuit pack, perform the following steps:
     a. Identify the procedure in Table 10-1 of Chapter 10, "Troubleclearing—Secondary Storage Subsystem" that provides recovery instructions for DISKA, DISKB, or SEC.
     b. Perform the recovery procedure.
     c. Continue this procedure at Step 2.
   - If the circuit pack was any main controller (MC) module circuit pack *except* PRI3 or SEC3, perform the following steps:
     a. Perform a hard reset right after the circuit pack is inserted into its slot.
     b. Continue this procedure at Step 2.
   - If the circuit pack was a PWRA circuit pack, regardless of whether your system has single or dual power feed, reinserting the PWRA circuit pack clears the IMPROPRMVL condition type, providing that the bay holding the PWRA circuit pack is in-service.

     Continue this procedure at Step 2.

- If the circuit pack was a PWRB, PWRC, or PWRD, perform the following steps:

  a. Perform a hard reset right after the circuit pack is inserted into its slot.

  b. Continue this procedure at Step 2.

- If the IMPROPRMVL was caused by the unit controller (UC) being removed from service, perform the following steps:

  a. Restore the UC back into service by entering:

  ```
  RST-EQPT::ELOC
  ```

  where

  `ELOC` = the equipment location, identified as UC-{1 through 4}-{IN,OUT} on a 1024-size system; UC-{1 through 8}-{IN,OUT} on a 2048-size system

  b. Continue this procedure at Step 2.

2. If more alarms exist on the frame, return to Procedure 9-1, "How to Clear Alarms" to determine the next corrective action to take.

INHSWPR

The condition type INHSWPR occurs when a circuit pack is inhibited from switching to a protection entity because either the pack was manually switched to a working pack via the SW-TOWKG-EQPT command or the pack was inhibited from switching to protection via the INH-SW-EQPT command.

The procedure to correct this problem follows.

Procedure 9-7. Clearing INHSWPR Condition Type

1. Ensure that the MC is in-service and that the bay containing the unprotected pack is in-service. If necessary, restore the MC to in-service by entering:

   `RST-EQPT::MC;`

   and restore the relevant unit-controller by entering:

   `RST-EQPT::ELOC;`

   where

   `ELOC` = the equipment location, identified as
   UC-{1 through 4}-{IN,OUT} on a 1024-size system or
   UC-{1 through 8}-{IN,OUT} on a 2048-size system

2. Allow the circuit pack associated with the alarm to switch to protection by entering:

   `ALW-SW-EQPT::ELOC::PROTN;`

   where

   `ELOC` = the circuit pack associated with the alarm

3. If more alarms exist on the frame, return to Procedure 9-1, "How to Clear Alarms," to determine the next corrective action to take.

INHSWWKG

The condition type INHSWWKG occurs when a circuit pack is inhibited from switching to a working entity. There are three possible ways for this problem to happen:

- The circuit pack was autonomously switched to protection and locked.
- The pack was manually switched to protection via the SW-TOPROTN-EQPT command.
- The pack was inhibited from switching to working via the INH-SW-EQPT command.

The procedure to correct this problem follows.

Procedure 9-8. Clearing INHSWWKG Condition Type

CAUTION:
Electrostatic discharge (ESD) damage.
ESD can cause damage to the components of a DACS III-2000 system. Wear an ESD wrist strap when working around the frame.

1. Ensure that the MC is in-service and that the bay containing the unprotected pack is in-service. If necessary, restore the MC to in-service by entering:

   RST-EQPT::MC;

   and restore the relevant unit-controller by entering:

   RST-EQPT::ELOC;

   where

   ELOC= the equipment location, identified as UC-{1 through 4}-{IN,OUT} on a 1024-size system; UC-{1 through 8}-{IN,OUT} on a 2048-size system

2. Allow the circuit pack associated with the alarm to switch to working by entering:

   ALW-SW-EQPT::ELOC::WKG;

   where

   ELOC = the circuit pack associated with the alarm

- If the problem reoccurs and the circuit pack is autonomously switched to protection and locked, replace the working circuit pack. If you need detailed replacement instructions, see Procedure 3-2, "Removing Circuit Packs" and Procedure 3-1, "Installing Circuit Packs."

3. If more alarms exist on the frame, return to Procedure 9-1, "How to Clear Alarms" to determine the next corrective action to take.

INT on Main Controller (MC) Module Circuit Packs

The procedure to correct main controller module circuit pack failures follows. This procedure also corrects a condition type of INT on a link.

Procedure 9-9. Clearing INT Condition Type on Main Controller (MC) Module Circuit Packs

CAUTION:
Electrostatic discharge (ESD) damage.
ESD can cause damage to the components of a DACS III-2000 system.
Wear an ESD wrist strap when working around the frame.

1. Check to see if the green LED is *off* on the power circuit pack (PWRB, PWRC, and PWRD).
   - If it is *off*, see Procedure 9-27, "Clearing Blown Primary (-48V) Fuse for All Other BUSes Except BUS E."
   - If it is *on*, continue this procedure at Step 2.
2. Check to see if the red LED is *on* on the power circuit pack (PWRB, PWRC, and PRWD).
   - If the red LED is *on*, perform the following steps:
     a. Obtain a new power circuit pack.
     b. Remove the failed power circuit pack. If you need detailed instructions, see Procedure 3-2, "Removing Circuit Packs."
     c. Insert the new power circuit pack. If you need detailed instructions, see Procedure 3-1, "Installing Circuit Packs."
   - If the red LED is *off*, check for a red LED on the fuse board FBE.
     — If a red LED is found on any of the fuses, see Procedure 9-28, "Clearing Blown Secondary Fuse in Main Controller (MC) Module."
     — If a red LED is not found on FBE, continue this procedure at Step 3.
3. Locate the bad circuit pack in the main controller (MC) module using *one* of the following methods until you find the location:
   a. Look for a main controller (MC) module circuit pack with a lighted red alarm LED.
   b. Enter the RTRV-ALM-EQPT command and see which main controller (MC) module circuit pack is reported.

c. Check the REPT ALM EQPT message.

4. Obtain a new main controller (MC) module circuit pack for the circuit pack(s) identified in Step 3.
5. Unseat the circuit pack from the slot by carefully operating the latch. If you need detailed instructions, see Procedure 3-2, "Removing Circuit Packs."
6. Insert the new main controller module circuit pack. If you need detailed instructions, see Procedure 3-1, "Installing Circuit Packs."
7. Reboot the system by simultaneously toggling the RESET ENABLE switch and pressing the RESET button.

   During the reset, you may see boot messages on any terminals connected to CILINK-1 or CILINK-2. On CILINK-1, these boot messages are output at 1200 baud. On CILINK-2, the baud rate depends on the type of enhanced communications interface (ECI) circuit pack installed in the frame. For an ECI2, the baud rate is 1200; for an ECI5, 2400.

   Reset completion time may be up to 6 minutes for a fully equipped 2048-size system. Smaller systems should take less time.

   - If the system successfully reboots, you will see the following message:

     ```
     login:

       <TID#0 YY-MM-DD HH:MM:SS>
     A   001 REPT RST EQPT
         /* LOC:STATE */
         "MC:IS"
     ;

     login:
     ```

   - If the system does *not* reboot, meaning you do not receive the REPT RST EQPT message shown above or you do receive a boot message of either `BOOT FAIL` or `RESET STOPPED`, call your system administrator or the next level of technical support.

8. Check to see if all red alarm LEDs in the main controller module go out.
   - If all the red alarm LEDs are out, you have corrected the problem.
   - If all the red alarm LEDs are not out and you have replaced the circuit pack twice, call your system administrator or the next level of technical support.
   - If all the red alarm LEDs are not out, repeat this procedure from Step 4.
9. If more alarms exist on the frame, return to Procedure 9-1, "How to Clear Alarms" to determine the next corrective action to take.

INT or MISC [100] on Input, Output, or DS3SW Circuit Packs

This section includes procedures for:

- clearing condition types INT or MISC [100] on an input or output interface circuit pack
- clearing condition types INT or MISC [100] on a DS3SW or DS3SWL interface circuit pack.

Procedure 9-10. Clearing INT or MISC [100] Condition Types on Input or Output Interface Circuit Packs

CAUTION:
Service interruption.
Failure to follow the procedure as written may cause service interruption. Never unseat two circuit packs in the same quadrant at the same time.

CAUTION:
Electrostatic discharge (ESD) damage.
ESD can cause damage to the components of a DACS III-2000 system. Wear an ESD wrist strap when working around the frame

1. Check that you have only one failed input or output circuit pack in the same module.
   - If there is only one failed circuit pack in the same module, continue this procedure at Step 2.
   - If there are two or more failed circuit packs in the same module, call your system administrator or the next level of technical support.
   - If you have an INT condition type on an input interface or output interface circuit pack that is on protection *and* an INT condition type on the unit controller, do *not* perform Procedure 9-10. Instead, go to Procedure 9-19.
2. Obtain a new circuit pack.
   - If the new circuit pack is an output circuit pack, set the LBO to match those of the failed output circuit pack. If you need detailed instructions, see Procedure 3-6, "Setting Line Buildout (LBO)."

   Remember the AISDET circuit packs found in the output module do not require an LBO setting.
3. Remove the failed circuit pack. If you need detailed instructions, see Procedure 3-2, "Removing Circuit Packs."
4. Insert the new circuit pack. If you need detailed instructions, see Procedure 3-1, "Installing Circuit Packs."

5. Check to see if the red alarm LED goes out.
   - If the red alarm LED went out, you have corrected the problem.
   - If the red alarm LED did *not* go out and you have replaced the circuit pack twice, call your system administrator or the next level of technical support.
   - If the red alarm LED did *not* go out, check the new alarm condition type in the REPT ALM EQPT message. If the new condition type is not INT or MISC[100], refer to Table 9-4 to determine which trouble-clearing procedure to use next.
   - If the red alarm LED did *not* go out and the condition type is still INT or MISC[100], repeat this procedure from Step 2.
6. If more alarms exist on the frame, return to Procedure 9-1, "How to Clear Alarms" to determine the next corrective action to take.

Procedure 9-11. Clearing INT or MISC [100] Condition Types on DS3SW Circuit Packs

CAUTION:
Electrostatic discharge (ESD) damage.
ESD can cause damage to the components of a DACS III-2000 system.
Wear an ESD wrist strap when working around the frame.

1. Verify that failures do not exist on more than one DS3SW circuit pack on a DACS III-2000, 1024-size system or on more than one mated pair of DS3SWL circuit packs on a DACS III-2000, 2048-size system by using one of the following methods:
   - — checking the locations specified in a RTRV-ALM-EQPT command
   - — checking the locations specified in a REPT ALM EQPT message
   - — checking the locations specified in a REPT SW EQPT message
   - — checking for lighted red alarm LEDs on DS3SW circuit packs.
2. Do one of the following:
   - If more than one failure exists, call your system administrator or the next level of technical support.
   - If only one failure exists, determine that the switch circuit pack is out-of-service for the failed circuit pack on a DACS III-2000, 1024-size system or for the mated pair of DS3SW circuit packs on a DACS III-2000, 2048-size system by entering:

     RTRV-STATE-EQPT::ELOC;

     where

     ELOC = the switch circuit pack, identified as DS3SW-<shelf number>-<slot number>. The shelf numbers are 01, for Shelf 1; 02 for Shelf 2; 03 for Shelf 3; 04 for Shelf 4. Remember Shelves 3 and 4 are available only with a DACS III-2000, 2048-size system. Valid slot numbers are1through 16.

     Look for the out-of-service (OOS) state in the output information.

CAUTION:
Loss of service.
Removing the incorrect DS3SW circuit packs can affect service.
Verify that the DS3SW circuit pack you want to remove is on protection.

3. Obtain a new DS3SW circuit pack.
4. Unseat the DS3SW circuit pack.

- If unseating a switch circuit pack on a 1024-size system and you need detailed instructions, see Procedure 3-2, "Removing Circuit Packs."
- If unseating a switch circuit pack on a 2048-size system and you need detailed instructions, see Procedure 3-4, "Removing DS3SWL CTR Circuit Packs."

5. Insert a new DS3SW circuit pack.
   - If inserting a switch circuit pack on a 1024-size system and you need detailed instructions, see Procedure 3-1, "Installing Circuit Packs."
   - If inserting a switch circuit pack on a 2048-size system and you need detailed instructions, see Procedure 3-3, "Installing DS3SWL CTR Circuit Packs."
6. Check to see if the red alarm LED on the DS3SW circuit pack went out.
   - If the red alarm LED went out, you have been successful in resolving the circuit pack failures.
   - If the red alarm LED did *not* go out and you have replaced a circuit pack twice, call your system administrator or the next level of technical support.
   - If the red alarm LED did *not* go out, obtain another circuit pack and return to Step 4.
7. If more alarms exist on the frame, return to Procedure 9-1, "How to Clear Alarms" to determine the next corrective action to take.

Procedure 9-12. Clearing INT Condition Type on DS3PROTN and STS1PROTN Circuit Packs.

CAUTION:
Service interruption.
Failure to follow the procedure as written may cause service interruption.
Never unseat two circuit packs in the same quadrant at the same time.

CAUTION:
Electrostatic discharge (ESD) damage.
ESD can cause damage to the components of a DACS III-2000 system.
Wear an ESD wrist strap when working around the frame.

1. Verify which protection switch (PROTN) circuit pack has failed by using one of the following methods:
   - checking the location specified in a REPT ALM EQPT message
   - checking the location specified in the response message to a `RTRV-ALM-EQPT` command
   - checking for lighted red alarm LEDs
2. Check for multiple circuit pack failures in the same module:
   - If the protection switch pack is the only failed circuit pack in the module then continue below with Step 3.
   - If there are two protection switch packs failed in the same module, do not continue. Call your system administrator or your next level of support.
   - If you have an INT condition type on a protection switch circuit pack *and* an INT condition type on an input or output interface circuit pack in the same module, then do not continue. Call your system administrator or your next level of support.
3. Obtain a new protection switch circuit pack.

CAUTION:
Loss of Idle Signal.
Removal of a protection switch pack causes loss of outgoing idle signal and downstream equipment will alarm.
Pack replacement should be as swift as possible.

4. Remove the failed DS3PROTN circuit pack. If you need detailed instructions, see Procedure 3-2, "Removing Circuit Packs."

5. Insert the new protection switch circuit pack. If you need detailed instructions, see Procedure 3-1, "Installing Circuit Packs."
6. Check to see if the red LED goes out.
   - If the red LED went out, you have corrected the problem.
   - If the red alarm LED did *not* go out, and you have replaced the circuit pack twice, call your system administrator or next level of support.
   - If the red alarm LED did not go out, check the new alarm condition type in the REPT ALM EQPT message. If the new condition type is not INT, refer to Table 9-4 to determine which troubleclearing procedure to use next.
   - If the red alarm LED did *not* go out and the condition type is still INT, repeat this procedure from Step 3.
7. If more alarms exist on the frame, return to Procedure 9-1, "How to Clear Alarms," to determine the next corrective action to take.

INT on Standard Fan Units (ED2C906-30,G1)

DACS III-2000, 2048-size systems are equipped with fan units.

The procedure to correct the INT condition type varies depending on which fan unit is installed in your system. Use Procedure 9-13 for standard fan units (ED2C906-30,G1); Procedure 9-14 for high performance fan units (ED9C130-30,G3).

Procedure 9-13. Clearing INT Condition Type on Standard Fan Units

CAUTION:
Electrostatic discharge (ESD) damage.
ESD can cause damage to the components of a DACS III-2000 system.
Wear an ESD wrist strap when working around the frame.

1. Look for the fan unit that has the red alarm LED. Fan-1 is located in Bay 5, the bay containing shelves1 and 2 of the DS3SW module. Fan-2 is located in Bay 6, the bay containing shelves 3 and 4 of the DS3SW module.
2. Check to see if a fan unit circuit breaker operated by looking for a protruding button on the circuit breaker.
   - If the circuit breaker operated, reset it by pressing the circuit breaker reset button on the fan unit.
     - — If the button popped out for a second time, call your system administrator or the next level of technical support.
     - — If the button did *not* pop out for a second time, continue this procedure at Step 6.
   - If the circuit breaker did *not* operate, check BUS B, BUS E, or BUS J on the Fuse and Alarm Panel to see if the red alarm lamp is lighted.
     - — If the red alarm lamp is *not* lighted, call your system administrator or the next level of technical support.
     - — If the red alarm lamp is lighted, most likely a fuse has blown. Identify and replace the blown fuse by continuing this procedure at Step 3.
3. Identify the blown fuse using Table 9-7, which shows the fan unit and fuse relationship.

Table 9-7. Fan Unit-Fuse Relationship for Standard Fan Unit (ED2C906-30,G1)

Fan Unit	Bus	Fuse
FAN-1	BUS B	B9-2
	BUS E	E6
FAN-2	BUS E	E7
	BUS J	J9-2

4. Replace the blown fuse. For detailed instructions, refer to one of the following procedures:
   - Procedure 9-27, "Clearing Blown Primary (-48V) Fuse for BUS E"
   - Procedure 9-28 "Clearing Blown Primary (-48V) Fuse for All Other BUSes Except BUS E"
5. Check that the red alarm lamp on the Fuse and Alarm Panel goes out.
   - If the red alarm lamp is *not* lighted, continue this procedure at Step 6.
   - If the red alarm lamp is *still* lighted, call your system administrator or the next level of technical support.
6. At the craft interface terminal, check to see if you received one of the following messages indicating the fan failure cleared:

   — For *Message Set 1:*

```
  <TID #n YY-MM-DD HH:MM:SS>
A <ASEQ> REPT ALM EQPT
   /* LOC:NTFCNCDE,CONDTYPE,SRVEFF:TROUBLE */
   " FAN-<x>: CL,INT,NSA:ISO "
;
```

   — For *Message Set 2:*

```
  <TID YY-MM-DD HH:MM:SS>
A <ASEQ> REPT ALM EQPT
   " FAN-<x>: CL,INT,NSA,,,,::,ISO "
;
```

   where

   x= fan unit number (1,2)

- If the preceding message is received, you have corrected the problem.
- If the preceding message is *not* received, call your system administrator or the next level of technical support.

INT on High Performance Fan Units (ED9C130-30,G3)

Fan unit problems occur only in a DACS III-2000, 2048-size system.

The procedure to correct the INT condition type varies depending on which fan unit is installed in your system. Use Procedure 9-13 for standard fan units (ED2C906-30,G1); Procedure 9-14 for high performance fan units (ED9C130-30,G3).

Procedure 9-14. Clearing INT Condition Type on High Performance Fan Units

CAUTION:
Electrostatic discharge (ESD) damage.
ESD can cause damage to the components of a DACS III-2000 system.
Wear an ESD wrist strap when working around the frame.

1. Look for the fan unit that has the alarm LED lighted.

   Fan-1 is located in Bay 5, the bay containing shelves 1 and 2 of the DS3SW module. Fan-2 is located in Bay 6, the bay containing shelves 3 and 4 of the DS3SW module.

   - If both the FAN/PWR and FILTER alarm LEDs are lighted, continue this procedure at Step 2.
   - If only the FILTER alarm LED is lighted, continue this procedure at Step 5.

2. Check to see if a fan unit circuit breaker operated by looking for a protruding button on the circuit breaker.

   - If the circuit breaker operated, reset it by pressing the circuit breaker reset button on the fan unit.
     - — If the button popped out for a second time, call your system administrator or the next level of technical support.
     - — If the button did *not* pop out for a second time, continue this procedure at Step 6.
   - If the circuit breaker did *not* operate, check BUS B, BUS E, or BUS J on the Fuse and Alarm Panel to see if the red alarm lamp is lighted.
     - — If the red alarm lamp is *not* lighted, call your system administrator or the next level of technical support.

— If the red alarm lamp is lighted, most likely a fuse has blown. Identify and replace the blown fuse by continuing this procedure at Step 3.

3. Identify the blown fuse using Table 9-8, which shows the fan unit and fuse relationship.

Table 9-8. Fan Unit-Fuse Relationship for High Performance Fan Unit (ED9C130-30,G3)

Fan Unit	Bus	Fuse
FAN-1	BUS B	B9-2
	BUS E	E6
FAN-2	BUS E	E7
	BUS J	J9-2

4. Replace the blown fuse. For detailed instructions, refer to one of the following procedures:
   - Procedure 9-27, "Clearing Blown Primary (-48V) Fuse for BUS E"
   - Procedure 9-28, "Clearing Blown Primary (-48V) Fuse for All Other BUSes Except BUS E"
5. Check that the red alarm lamp on the Fuse and Alarm Panel goes out.
   - If the red alarm lamp is *not* lighted, continue this procedure at Step 6.
   - If the red alarm lamp is still lighted, call your system administrator or the next level of technical support.
6. Press the RESET button on the fan unit and hold it for one second.

   This extinguishes the FAN/PWR and FILTER alarm LEDs.
   - If the alarm LEDs extinguish, continue this procedure at Step 7.
   - If the alarm LEDs remain lighted, try pressing the RESET button again.
     - — If *only* the red FAN/PWR alarm LED remains lighted, call your system administrator or the next level of technical support.
     - — If *only* the yellow FILTER alarm LED remains lighted, continue this procedure at Step 8.

— If *both* the FAN/PWR and FILTER alarm LEDs remain lighted, push in the filter to make sure it is properly seated and press the reset button again. If there still is no change in the LEDs, call your system administrator or the next level of technical support.

7. At the craft interface terminal, check to see if you received one of the following messages indicating the fan failure cleared:

   — For *Message Set 1:*

```
  <TID #n YY-MM-DD HH:MM:SS>
A <ASEQ> REPT ALM EQPT
   /* LOC:NTFCNCDE,CONDTYPE,SRVEFF:TROUBLE */
   " FAN-<x>: CL,INT,NSA:ISO "
;
```

   — For *Message Set 2:*

```
  <TID YY-MM-DD HH:MM:SS>
A <ASEQ> REPT ALM EQPT
   " FAN-<x>: CL,INT,NSA,,,,::,ISO "
;
```

   where

   x = fan unit number (1,2)

   - If the preceding message is received, you have corrected the problem and you do not need to continue with this procedure.
   - If the preceding message is *not* received, call your system administrator or the next level of technical support.

8. Obtain a replacement filter.

   For the high performance fan unit, you need fan filter WP92310,L100; COMCODE 406747972.

9. Remove the air filter by pulling on the pull tabs.

WARNING:
Moving fan blades.
Lack of protection guard could lead to injury from rotating fan blades.
Use caution when removing and inserting the air filters.

The FAN/PWR and FILTER alarm LEDS light and the fans are disabled, indicating the power is off. You now have 30 minutes to replace the filter and power up the fan unit under normal operating conditions. (After 30 minutes, the shelf temperature may get too hot and cause damage to circuit packs.)

10. Wait two minutes for the fan blades to stop rotating.

11. Make a visual check that nothing is restricting the air flow.

12. Insert the new air filter, with the pull tabs facing you, following the direction of the arrow on the filter; the arrow indicates air flow.

    The fans should power up automatically once the filter is installed.

    - If the fans power up, continue this procedure at Step 13.
    - If the fans do *not* power up, call your system administrator or next level of technical support.

13. Press the RESET button on the fan unit and hold it for one second.

    This extinguishes the FAN/PWR and FILTER alarm LEDs.

    - If the alarm LEDs extinguish, continue this procedure at Step 14.
    - If the alarm LEDs remain lighted, try pressing the RESET button again. If they still remain lighted, call your system administrator or the next level of technical support.

14. Check for one of the following alarm cleared messages:

    — For *Message Set 1:*

    ```
      <TID #n YY-MM-DD HH:MM:SS>
    A <ASEQ> REPT ALM EQPT
       /* LOC:NTFCNCDE,CONDTYPE,SRVEFF:TROUBLE */
       " FAN-<x>: CL,INT,NSA:ISO "
    ;
    ```

    — For *Message Set 2:*

    ```
      <TID YY-MM-DD HH:MM:SS>
    A <ASEQ> REPT ALM EQPT
       " FAN-<x>:CL,INT,NSA,,,,::,ISO "
    ;
    ```

    where

    x = the fan unit number; 1 or 2

    - If the alarm has cleared, you have successfully replaced the clogged fan filter.
    - If the alarm has *not* cleared, call your system administrator or the next level of technical support.

INT and Other PWRA (552A) Failures

The procedure to correct a condition type of INT and other PWRA (552A) failures in the input, output, or DS3SW modules follows. This procedure applies to systems that use the single power feed circuit pack (552A).

Procedure 9-15. Clearing INT Condition Type and Other PWRA (552A) Failures in Input, Output, or DS3SW Modules

CAUTION:
Electrostatic discharge (ESD) damage.
ESD can cause damage to the components of a DACS III-2000 system.
Wear an ESD wrist strap when working around the frame.

1. Press the LED/LAMP TEST button on the status panel at the front of the MC module.
2. If the PWRA (552A) circuit pack green and red LEDs are ON, continue this procedure at Step 5.
3. If the red LED is ON and the green LED is OFF, continue this procedure at Step 5 .
4. If the green and red LEDs are OFF, see Procedure 9-27, "Clearing Blown Primary (-48V) Fuse for All Other BUSes Except BUS E."
5. Look at the alarm message and the LEDs to see if there is more than one power circuit pack failure in a single input, output, or DS3SW module.
   - If the LEDs on the frame indicate more than one failed power circuit pack in a given module, call your system administrator or the next level of technical support.
   - If alarm messages indicate multiple alarms with an error code of NIMAN, go to the frame and check the LEDs. The multiple messages may have been caused by only one failed power unit.
   - If the alarm messages or the red and green LEDs indicate only one failed power circuit pack in a given module, continue this procedure at Step 6.
6. Obtain a replacement power circuit pack.
7. Remove the power circuit pack identified originally by the RTRV-ALM-EQPT command. If you need detailed instructions, see Procedure 3-2, "Removing Circuit Packs."

   If you do not remember which one it is, enter the command again and check that the alarm and LED match.

CAUTION:
Downstream loss-of-signal (LSSIG) may occur.
Power unit shield may pull off an LBO plug if the power circuit pack resides adjacent to slot 1 or slot 15 of an output module.
Be prepared, should LSSIG occur, to switch the circuit pack to protection, remove the circuit pack, and reseat the LBO plug.

8. Insert the replacement power circuit pack. If you need detailed instructions, see Procedure 3-1, "Installing Circuit Packs."
9. Verify that the alarm cleared by checking for an extinguished red LED and a lighted green LED.
10. If more alarms exist on the frame, return to Procedure 9-1, "How to Clear Alarms," to determine the next corrective action to take.

INT on PWRA2 (566A) Circuit Packs

The procedure that follows corrects an INT condition type on PWRA2 (566A) circuit packs in the input, output, or DS3SW modules. It applies to systems that use the dual power feed circuit pack (566A).

In Procedure 9-16, when you are asked to measure the output between testpoints, note the following:

V1 refers to the voltage measured between testpoints TST1 and TST1R;
V2 refers to the voltage measured between testpoints TST2 and TST2R.

Figure 9-3 shows the location of the four testpoints on a PWRA2 (566A) circuit pack.

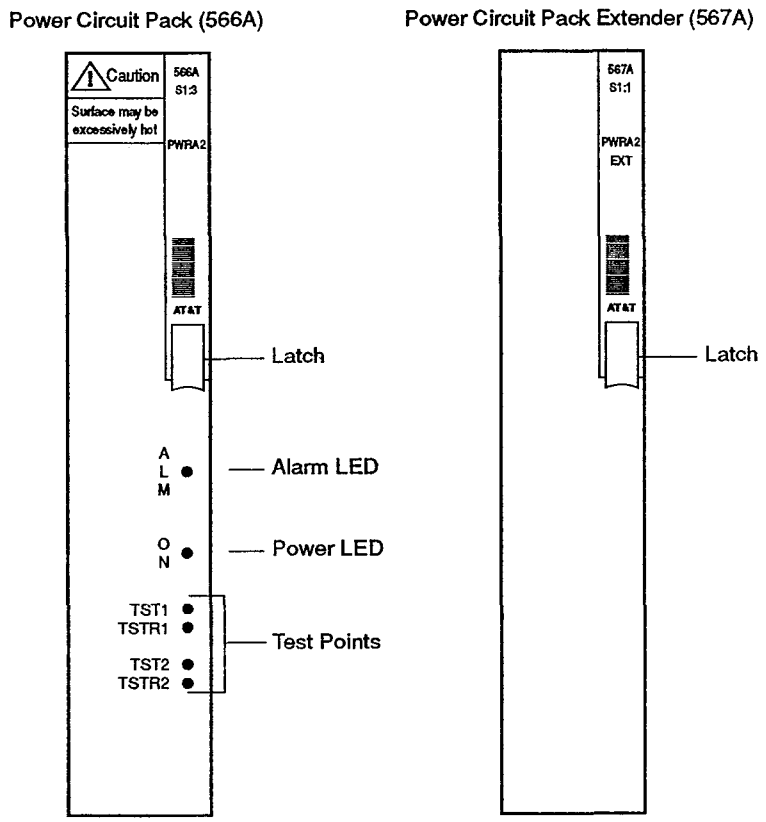

Figure 9-3. New Power Circuit Pack (566A) and Extender (567A)

When referencing the location of PWRA2 (566A) and PWRA2 EXT (567A) circuit packs in an I/O bay, use Figure 9-4.

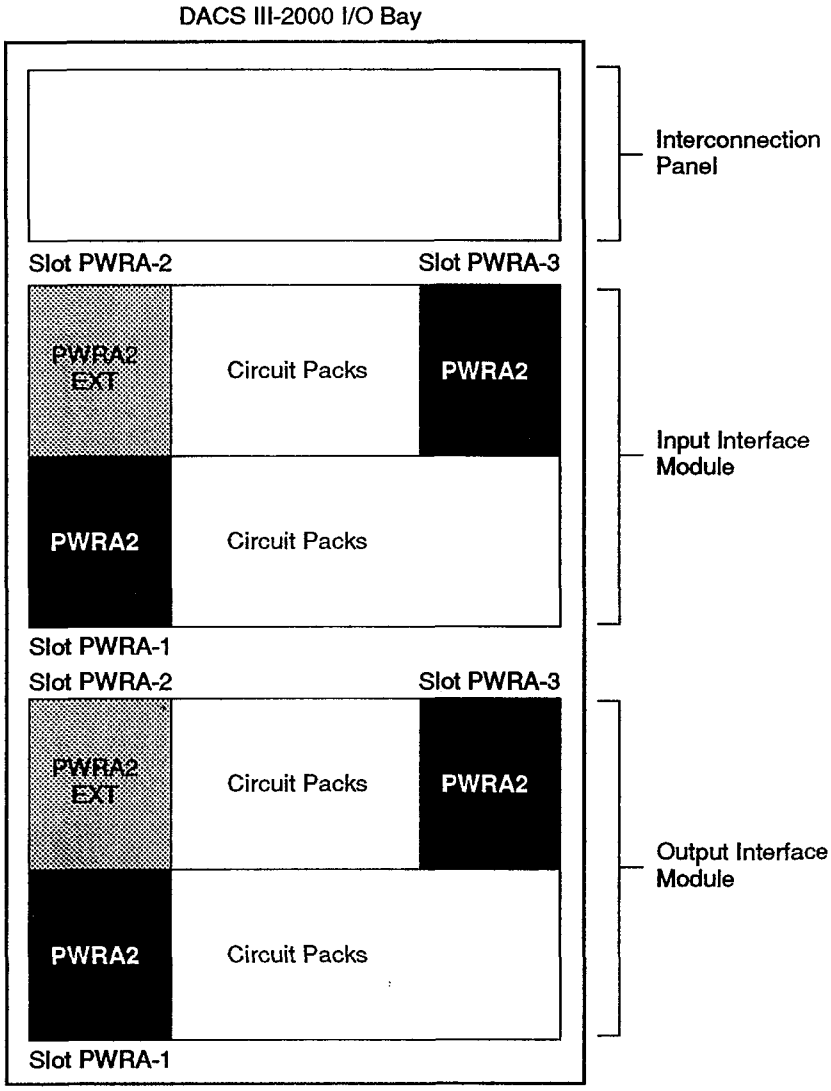

Figure 9-4. Dual Power Feed Circuit Packs in an I/O Bay—Front View

When referencing the location of PWRA2 (566A) and PWRA2 EXT (567A) circuit packs in a 1024-size switch bay, use Figure 9-5

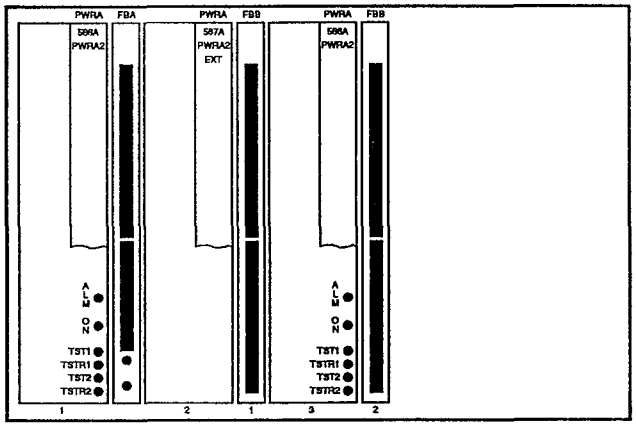

Figure 9-5. Dual Power Feed Circuit Packs in a 1024-size Switch Bay

When referencing the location of PWRA2 (566A) circuit packs in a 2048-size switch bay, use Figure 9-6.

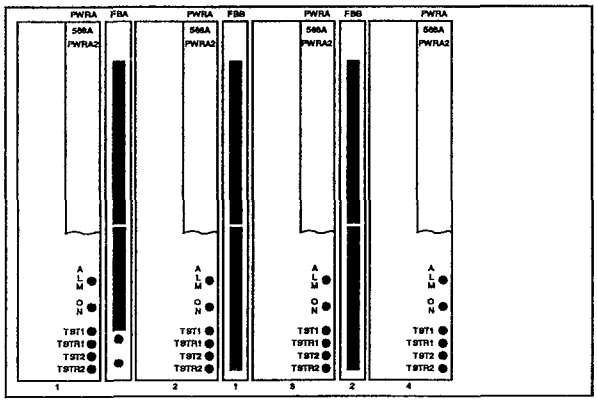

Figure 9-6. Dual Power Feed Circuit Packs in a 2048-size Switch Bay

Procedure 9-16. Clearing INT Condition Type on PWRA2 (566A) Circuit Packs in Input, Output, and DS3SW Modules

CAUTION:
Electrostatic discharge (ESD) damage.
ESD can cause damage to the components of a DACS III-2000 system. Wear an ESD wrist strap when working around the frame.

1. Verify which PWRA2 (566A) circuit packs are affected by entering:

   RTRV-ALM-EQPT;

   The system responds with the following message:

```
  <TID #n YY-MM-DD HH:MM:SS>
M  RTRV ALM EQPT::ELOC:CTAG:NOCD,COTY,SRV COMPLD
   /* LOC,NTFCNCDE,CONDTYPE,SRVEFF */
   " <LOC>,MJ,INT,NSA "
;
```

   where

   LOC = the PWRA2 (566A) circuit pack location: identified as

   — PWRA-{1 through 8}-IN-{1,3} for input interface modules

   — PWRA-{1 through 8}-OUT-{1,3} for output interface modules

   — PWRA-SW-{1,3} for a DS3SW PWR module in a 1024-size system or PWRA-SW-{1,2}-{1 through 4} for a DS3SW PWR module in a 2048-size system

2. Check the RTRV ALM EQPT message carefully, identifying all occurrences of the INT condition type, and writing down the PWRA2 locations given in the response.

3. Verify that the system is provisioned for duplex power by entering:

   RTRV-PRMTR-NE;

   The system responds with the following message:

```
  <TID #n YY-MM-DD HH:MM:SS>
M  RTRV PRMTR NE:::<CTAG> COMPLD
   /*  NETYPE,NESIZE,SFTWR-VRSN,ALM-DLY,N-SW,SW-INT,
          HLD-TIME:DBCHG */
   /*  PM-FEAT,PM-DATA-LINES,FAIL-TYPE,FAIL-THRES,
          MAN-PROTN ID,REARRANGE,PWR,ACDL,SDLY,SCDL */
   "  <NETYPE,NESIZE,SFTWR-VRSN,ALM-DLY,N-SW,SW-INT,
          HLD-TIME:DBCHG> "
   "  <PM-FEAT,PM-DATA-LINES,FAIL-TYPE,FAIL-THRES,
          MAN-PROTN ID,REARRANGE,PWR,ACDL,SDLY,SCDL> "
;
```

where

PWR= the type of Central Office power arrangement to which the DACS III-2000 is connected.
SPLX (for simplex) means that the single power feed arrangement is used.
DPLX (for duplex) means that the dual power feed arrangement is used.

- If the message shows DPLX, continue this procedure at Step 4.
- If the message shows SPLX, call your system administrator or the next level of technical support. Do *not* continue with this procedure until instructed to do so.

CAUTION:
Possible loss of traffic.
If your system is provisioned for SPLX, your alarm information may be unreliable, leading to possible loss of traffic.
Call your system administrator or the next level of technical support before continuing with this procedure.

4. Using the list of PWRA2 locations from Step 2 and Table 9-9, decide which section of Procedure 9-16 applies to your situation and go to the step number identified in the table.

Table 9-9. Next Step to Go to in Procedure 9-15

Number of PWRA2 (566A) Circuit Packs Showing INT Condition Type	Module(s) Identified in Message	Next Step to go to in Procedure 9-15
One	Single DS3SW PWR module	Step 5
Two*	Single input module *or* Single output module	Step 15
Multiple	Multiple input, output, or DS3SW PWR modules	Step 35

* A single alarm lead is shared by both PWRA2 (566A) circuit packs in a given input (or output) module. Therefore, a *single* PWRA2 circuit pack failure will actually cause two alarm messages to be generated.

Clearing INT Condition Type for One Power Supply in a Single DS3SW PWR Module

5. Having identified, in Step 4, only *one* alarm for a DS3SW PWR module, correct the power problem starting at Step 6.
6. Go to the DACS III-2000 frame and locate the PWRA2 (566A) circuit pack identified in Step 2.
7. Check the status of the PWRA2 (566A) circuit pack by looking at the green LED.
   - If the green LED is ON, continue this procedure at Step 8.
   - If the green LED is OFF, you must first perform Procedure 9-27, "Clearing Blown Primary (-48V) Fuse for All Other BUSes Except BUS E" before returning to this step.
     - — If the alarm cleared as a result of performing Procedure 9-27, then you have successfully corrected the problem and are finished with this procedure.
     - — If the alarm still has *not* cleared, continue this procedure at Step 8.
8. Check the status of the red ALM LEDs on the PWRA2 (566A) circuit packs in the DS3SW PWR module.

- If *one* circuit pack has a lighted red ALM LED, and that circuit pack matches the one identified as having an INT condition type in Step 2, continue this procedure at Step 9.
- If *none* of the circuit packs has a lighted red ALM LED, continue this procedure at Step 9.
- If *one* circuit pack has a lighted red ALM LED, and that circuit pack does *not* match the one identified as having an INT condition type in Step 2, call your system administrator or the next level of technical support. Do *not* continue with this procedure until instructed to do so.
- If you find *more than one* circuit pack with a lighted red ALM LED, call your system administrator or the next level of technical support. Do *not* continue with this procedure until instructed to do so.

9. Obtain one replacement PWRA2 (566A) circuit pack and label it "SPARE".
10. At the frame, remove the PWRA2 (566A) circuit pack identified in Step 2.

    The system may respond with an IMPROPRMVL alarm on the removed circuit pack. If you have a 1024-size system, you may receive two IMPROPRMVL alarms; on a 2048-size system, you may receive eight IMPROPRMVL alarms. Additionally, the system may respond with a message showing that the INT alarm cleared on the circuit pack identified in Step 2.
11. Insert the replacement PWRA2 (566A) circuit pack.

    The system may respond by clearing the IMPROPRMVL alarm on the removed circuit pack. If you have a 1024-size system, you may receive a message indicating the clearing of two IMPROPRML alarms; on a 2048-size system, the clearing of eight IMRPOPRMVL alarms.
12. Check to make sure the problem has been corrected by entering:

    RTRV-ALM-EQPT;

    The system responds with the following message:

```
  <TID #n YY-MM-DD HH:MM:SS>
M  RTRV ALM EQPT::ELOC:CTAG:NOCD,COTY,SRV COMPLD
   /* LOC,NTFCNCDE,CONDTYPE,SRVEFF */
   " <LOC>,MJ,INT,NSA "
;
```

    - If an alarm with INT condition type no longer appears for the location identified in Step 2, continue this procedure at Step 13.
    - If an alarm with INT condition type still appears for the location identified in Step 2, call your system administrator or the next level of technical support. Do *not* continue with this procedure until instructed to do so.
13. Verify the load sharing of the new PWRA2 (566A) circuit pack plus all others in that DS3SW PWR module, by performing the following steps:

a. Obtain a recently calibrated digital multimeter, which has a DC millivolt scale and a recommended precision of ±(.25% of reading plus 1 digit).

b. With the digital multimeter set to the DC millivolt scale, measure the *V1* output, between testpoints TST1 and TST1R, for each PWRA (566A) circuit pack in the DS3SW PWR module. Write down the *V1* value for each measured circuit pack.

c. With the digital multimeter set to the DC millivolt scale, measure the *V2* output, between testpoints TST2 and TST2R, for each PWRA (566A) circuit pack in the DS3SW PWR module. Write down the *V2* value for each measured circuit pack.

   The *V2* values may be very low, even zero, but as long as the *V2* values fall within the range defined in the tables, they are acceptable.

d. Calculate the total output by performing the following steps:

   i. Add all the *V1* values.

   ii. Add all the *V2* values.

   iii. Add the *V1* total to the *V2* total to arrive at the total for the entire DS3SW PWR module.

   Two examples follow: one for a 1024-size system, and one for a 2048-size system.

Example for 1024-size System: Calculating Output for DS3SW PWR Module

PWRA2 Equipment Location	*V1* output (TST1 to TST1R)	*V2* output (TST2 to TST2R)	Total Output for DS3SW PWR Module
slot PWRA-1	17.2 mv	5.4 mv	—
slot PWRA-3	15.0 mv	8.6 mv	—
Total	32.2 mv	14.0 mv	46.2 mv

Example for 2048-size System: Calculating Output for DS3SW PWR Module

PWRA2 Equipment Location	*V1* output (TST1 to TST1R)	*V2* output (TST2 to TST2R)	Total Output for DS3SW PWR Module
slot PWRA-1	17.2 mv	5.4 mv	—
slot PWRA-2	15.0 mv	8.6 mv	—
slot PWRA-3	8.7 mv	12.8 mv	—
slot PWRA-4	10.7 mv	16.8 mv	—
Total	51.6 mv	43.6 mv	95.2 mv

e. Locate the load sharing table that matches your configuration (load sharing tables can be found at the end of this procedure):

   — If the DS3SW PWR module has *two* PWRA2 (566A) circuit packs, use Table 9-12 for *V1* output and Table 9-13 for *V2* output.

   — If the DS3SW PWR module has *four* PWRA2 (566A) circuit packs, use Table 9-14 for *V1* output and Table 9-15 for *V2* output.

   For example, if you were to perform this step using the calculations from the previous example for a 2048-size system, you would turn to Tables 9-14 and 9-15.

f. Using the total output for the entire module (*V1* total plus *V2* total), run your finger down the "Total Output" column in the load sharing table for *V1* output and locate the matching total output.

   Continuing with the 2048-size system example, you would locate the row in Table 9-14 that shows total output as "95-100".

g. Moving across that row, compare each *V1* value with the values shown in the "Minimum" and "Maximum" columns to determine whether they are within an acceptable range.

   Continuing with the 2048-size system example, you would see that each *V1* value has to fall within the range of 4.5 to 25.5 mv.

h. Using the total output for the entire module (*V1* total plus *V2* total), run your finger down the "Total Output" column in the load sharing table for *V2* output and locate the matching total output.

   Continuing with the 2048-size system example, you would locate the row in Table 9-15 that shows total output as "95-100".

i. Moving across that row, compare each *V2* value with the values shown in the "Minimum" and "Maximum" columns to determine whether they are within an acceptable range.

Continuing with the 2048-size system example, you would see that each *V2* value has to fall within the range of 2.1 to 17.5 mv.

j. Determine the next step to take by selecting from the following two options:

- If the *V1* and *V2* values for *all* measured PWRA2 (566A) circuit packs are within an acceptable range, continue this procedure at Step 14.
- If the *V1* or *V2* values are *not* within an acceptable range for *any* measured PWRA2 (566A) circuit pack, call your system administrator or the next level of technical support. Do *not* continue with this procedure until instructed to do so.

14. You have successfully corrected the INT condition type. If more alarms exist on the frame, return to Procedure 9-1, "How to Clear Alarms," to determine the next corrective action to take.

Clearing INT Condition Type for Two Power Supplies in a Single Input (or Output) Module

15. Having identified, in Step 2, *two* alarms within a single input (or output) module, correct the power problem by starting at Step 16.

16. Verify that the unit controller (UC) is in-service (IS) by entering:

```
RTRV-STATE-EQPT::ELOC;
```

where

ELOC = the unit controller associated with the module identified in Step 2; specified as UC-{1 through 4}-{IN,OUT} on a 1024-size system; UC-{1 through 8}-{IN,OUT} on a 2048-size system

The system responds with the following message:

```
   <TID #n YY-MM-DD HH:MM:SS>
M   RTRV STATE EQPT::<ELOC:CTAG:STATE> COMPLD
   /* LOC:STATE */
   " <LOC:STATE> "
;
```

- If the unit controller (UC) is in the in-service (IS) state, continue this procedure at Step 17.
- If the unit controller (UC) is in the out-of-service fault (OOS-FLT) or out-of-service maintenance (OOS-MTCE) state, perform the following steps:

  a. Make sure a unit controller is physically present in the module.

  b. Restore the unit controller by entering:

```
RST-EQPT::ELOC;
```

where

ELOC= the unit controller associated with the module identified Step 2; expressed as UC-{1 through 4}-{IN,OUT} on a 1024-size system; UC-{1 through 8}-{IN,OUT} on a 2048-size system

— If the system responds with the COMPLD message, continue this procedure at Step 17.

— If the system responds with the DENY message, make a note that the unit controller is still out-of-service, then continue this procedure at Step 17.

17. Go to the DACS III-2000 frame and locate the input or output module with the PWRA2 (566A) circuit packs identified in Step 2.

18. Check the status of both PWRA2 (566A) circuit packs by looking at the green LED on each circuit pack.

    - If the green LED for *both* power circuit packs is ON, continue this procedure at Step 19.
    - If the green LED for *either* power circuit pack is OFF, you must first perform Procedure 9-28, "Clearing Blown Primary (-48V) Fuse for All Other BUSes Except BUS E," before returning to this step.

      — If the alarm cleared as a result of performing Procedure 9-28, then you have successfully corrected the problem and are finished with this procedure.

      — If the alarm still has *not* cleared, continue this procedure at Step 19.

19. Obtain the following items in preparation for upcoming steps:

    — three replacement PWRA2 (566A) circuit packs; label them with the word "SPARE"

    — a recently calibrated digital multimeter, which has a DC millivolt scale and a recommended precision of ±(.25% of reading plus 1 digit)

    — a small flathead screwdriver (COMCODE 901255745 or equivalent)

20. To further identify which circuit pack will need to be replaced, measure the load sharing of the PWRA2 (566A) circuit packs, by performing the following steps:

    a. With the digital multimeter set to the DC millivolt scale, measure the *V1* output between testpoints TST1 and TST1R on each PWRA2 (566A) circuit pack. Write down the *V1* value for each measured circuit pack.

    b. With the digital multimeter set to the DC millivolt scale, measure the *V2* output between testpoints TST2 and TST2R on each PWRA2 (566A) circuit pack. Write down the *V2* value for each measured circuit pack.

The *V2* values may be very low, even zero, but as long as the *V2* values fall within the range defined in the tables, they are acceptable.

c. Calculate the total output by adding *V1* and *V2* for each PWRA2 (566A) circuit pack in the affected module.

d. Write down, for later use in this procedure, the slot number of the PWRA2 (566A) circuit pack that is providing the *lower* total output and the slot number of the one providing the *higher* total output.

The example that follows demonstrates the previous steps.

Example: Identifying Circuit Packs with Higher and Lower Outputs

PWRA2 Equipment Location	*V1* output (TST1 to TST1R)	Plus	*V2* output (TST2 to TST2R)	Equals	Total Output Per Circuit Pack
slot PWRA-1	19.9 mv	+	5.4 mv	=	25.3 mv
slot PWRA-3	18.7 mv	+	6.8 mv	=	25.5 mv

21. Prepare to remove the PWRA2 EXT (567A) circuit pack located in slot PWRA-2.

    a. Locate the screw found in the handle of the latch on the PWRA2 EXT (567A) circuit pack. The screw will be flush with the side of the latch.

    Drawings A and B in Figure 9-7 show details of the side of the latch.

    b. Rotate the screw counterclockwise until the latch lock is unlocked.

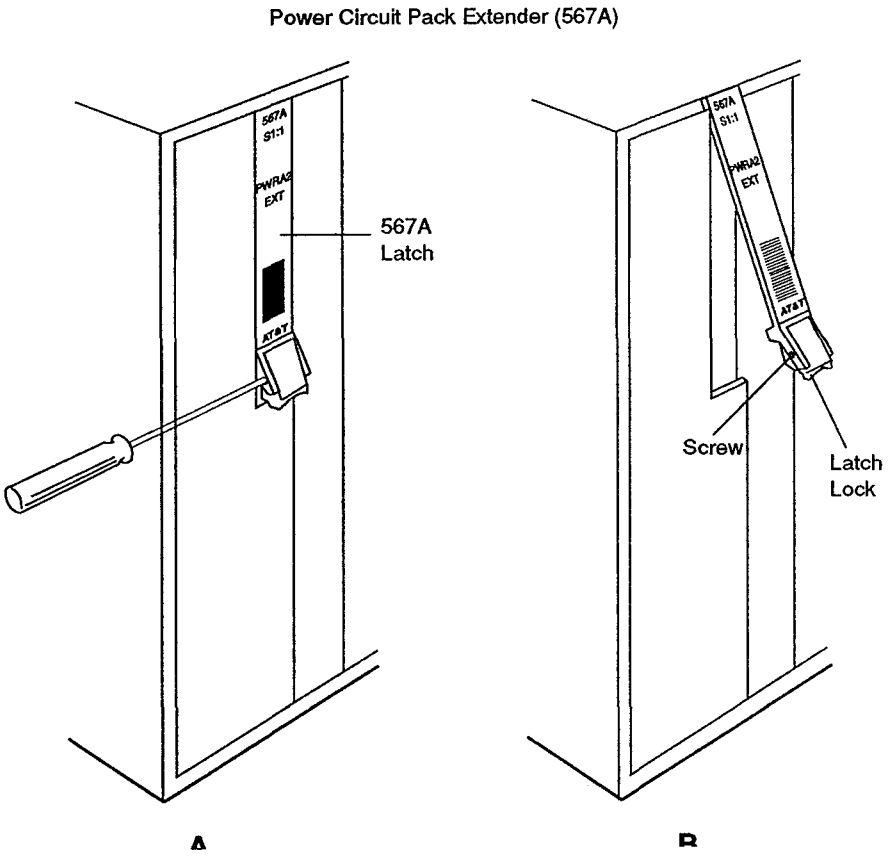

Figure 9-7. Locking Mechanism on PWRA2 EXT (567A) Circuit Pack

22. At the frame, lift the latch on the PWRA2 EXT (567A) circuit pack and remove it from slot PWRA-2. Figure 9-7, drawing B, shows the opened latch.

    The system may respond with the following message showing an alarm with an IMPROPRMVL condition type:

```
   <TID #n YY-MM-DD HH:MM:SS>
** <ASEQ> REPT ALM EQPT
     /* LOC>:MJ,CONDTYPE,SRVEFF:TROUBLE */
     " <LOC>:MJ,IMPROPRMVL,NSA:<TROUBLE> "
;
```

    Continue this procedure at Step 23.

23. Insert one of the "SPARE" PWRA2 (566A) circuit packs into slot PWRA-2.

Putting the PWRA2 (566A) circuit pack into slot PWRA-2 provides a temporary backup in the event the wrong power circuit pack is removed from the module.

The system may respond with the following message showing the IMPROPRMVL alarm has cleared:

```
  <TID #n YY-MM-DD HH:MM:SS>
A <ASEQ> REPT ALM EQPT
   /* LOC:NTFCNCDE,CONDTYPE,SRVEFF:TROUBLE */
   " <LOC>:CL,IMPROPRMVL,NSA:<TROUBLE> "
;
```

24. Verify that the power feeder is providing input power to the PWRA2 (566A) circuit pack in slot PWRA-2.

    The red ALM LED should be OFF and the green LED should be ON.

    - If the red ALM LED is OFF and the green LED is ON, continue this procedure at Step 25.
    - If the green LED is OFF, call your system administrator or the next level of technical support. Do *not* continue with this procedure until instructed to do so.

25. If you were unable to restore the unit controller in Step 16, try again to restore it by entering:

    RST-EQPT::ELOC;

    where

    ELOC = the equipment location, identified as
    UC-{1 through 4}-{IN,OUT} on a 1024-size system; or
    UC-{1 through 8}-{IN,OUT} on a 2048-size system

    - If the system responds with the COMPLD message, continue this procedure at Step 26.
    - If the system responds with the DENY message, note that the unit controller is still out-of-service, then continue this procedure at Step 26.

26. At the frame, remove the power circuit pack that is providing the *lower* total output as determined in Step 20d.

    The system may respond with an IMPROPRMVL alarm on the removed circuit pack. Additionally, the system may respond with a message showing that the INT alarm cleared on one or both of the circuit packs located in slots PWRA-1 and PWRA-3.

    Alarm transitions, like alarm assertion or clearance, do not occur for INT condition types on slot PWRA-2 because the duplex power configuration suppresses them.

    Continue this procedure at Step 27.

27. Insert one of the "SPARE" PWRA2 (566A) circuit packs into the slot emptied in Step 26.

The system may respond with a message showing the IMPROPRMVL cleared for the slot in which you just inserted the "SPARE." Also, the system may reassert an INT alarm for the replaced circuit pack.

Continue this procedure at Step 28.

28. Check to see if you replaced the correct PWRA2 circuit pack by entering:

RTRV-ALM-EQPT;

The system responds with the following message:

```
  <TID #n YY-MM-DD HH:MM:SS>
M  RTRV ALM EQPT::ELOC:CTAG:NOCD,COTY,SRV COMPLD
   /* LOC,NTFCNCDE,CONDTYPE,SRVEFF */
   " <LOC>,MJ,INT,NSA "
   " <LOC>,MJ,INT,NSA "
;
```

- If this is the second time you have performed Step 28, meaning you have replaced both power circuit packs, and the alarm still *has not* cleared, call your system administrator or next level of technical support. Do *not* continue with this procedure until instructed to do so.
- If this is the second time you have performed Step 28, meaning you have replaced the PWRA2 (566A) circuit packs in slots PWRA-1 *and* PWRA-3, and the alarm cleared, continue this procedure at Step 29.
- If the INT alarm did *not* clear, repeat Steps 26 through 28 for the power circuit pack that was providing the *higher* total output as noted in Step 20d.
- If no INT alarms appear in the message, meaning the INT alarm cleared, continue this procedure at Step 29.

29. Remove the PWRA2 (566A) circuit pack currently in slot PWRA-2

The PWRA2 (566A) circuit pack is no longer needed as a backup.

The system may respond with the following message showing an alarm with an IMPROPRMVL condition type:

```
   <TID #n YY-MM-DD HH:MM:SS>
** <ASEQ> REPT ALM EQPT
    /* LOC>:MJ,CONDTYPE,SRVEFF:TROUBLE */
    " <LOC>:MJ,IMPROPRMVL,NSA:<TROUBLE> "
;
```

30. Insert the PWRA2 EXT (567A) circuit pack in slot PWRA-2.

The system may respond with the following message showing the IMPROPRMVL alarm has cleared:

```
  <TID #n YY-MM-DD HH:MM:SS>
A <ASEQ> REPT ALM EQPT
   /* LOC:NTFCNCDE,CONDTYPE,SRVEFF:TROUBLE */
   " <LOC>:CL,IMPROPRMVL,NSA:<TROUBLE> "
;
```

31. Rotate the screw that locks the PWRA2 EXT (567A) circuit pack clockwise until it is flush with the side of the latch.

    The PWRA2 EXT (567A) circuit pack is now locked into position.

32. Before exiting this procedure, double check that the load sharing of the PWRA2 (566A) circuit packs is correct, by performing the following steps:

    a. With the digital multimeter set to the DC millivolt scale, measure the *V1* output between testpoints TST1 and TST1R on the PWRA2 (566A) circuit packs in slots PWRA-1 and PWRA-3. Write down the *V1* value for each measured circuit pack.

    b. With the digital multimeter set to the DC millivolt scale, measure the *V2* output, between testpoints TST2 and TST2R, for the PWRA2 (566A) circuit packs in slots PWRA-1 and PWRA-3. Write down the *V2* value for each measured circuit pack.

    c. Calculate the total output by adding *V1* and *V2* for each PWRA2 (566A) circuit pack. Write down the total output for each measured circuit pack.

       The example that follows demonstrates the previous steps.

Example: Calculating Output for Input and Output Modules

PWRA2 Equipment Location	*V1* output (TST1 to TST1R)	*V2* output (TST2 to TST2R)
slot PWRA-1	19.9 mv	5.4 mv
slot PWRA-3	18.7 mv	6.8 mv
Total	38.6 mv	12.2 mv

    d. Using the total *V1* value, run your finger down the "Total Output" column in Table 9-10 and locate the matching total *V1* value.

       Continuing with the example, you would locate the row in Table 9-10 that shows total output as "38-39."

e. Moving across that row, compare the *V1* value for each slot with the values shown in the "Minimum" and "Maximum" columns to determine whether they are within an acceptable range.

   Continuing with the example, you would check that the *V1* value for each circuit pack falls within the range of 14.5 to 24.5 mv.

f. Using the total *V2* value, run your finger down the "Total Output" column in Table 9-11 and locate the matching total *V2* value.

   Continuing with the example, you would locate the row in Table 9-11 that shows total output as "12-13."

g. Moving across that row, compare the *V2* value for each slot with the values shown in the "Minimum" and "Maximum" columns to determine whether they are within an acceptable range.

   Continuing with the example, you would check that the *V2* value for each circuit pack falls within the range of 2.0 to 11.0 mv.

h. Determine the next step to take by selecting from the following two options:

   - If the *V1* or *V2* output for *any* of the measured PWRA2 (566A) circuit packs is *not* within the acceptable range, call your system administrator or the next level of technical support. Do *not* continue with this procedure until instructed to do so.
   - If *all* of the *V1* and *V2* outputs are within the acceptable ranges, continue this procedure at Step 33.

33. If you were unable to restore the unit controller in Step 16, try again to restore it by entering:

    RST-EQPT::ELOC;

    where

    ELOC = the equipment location, identified as UC-{1 through 4}- {IN,OUT} on a 1024-size system; UC-{1 through 8}-{IN,OUT} on a 2048-size system

    - If the system responds with the COMPLD message, continue this procedure at Step 34.
    - If the system responds with the DENY message, go to Procedure 9-18, "Clearing INT Condition Type on Unit Controllers (UC)" to correct the problem.

34. You have successfully corrected the INT condition type. If more alarms exist on the frame, return to Procedure 9-1, "How to Clear Alarms" to determine the next corrective action to take.

Clearing INT Condition Type for Multiple Power Supplies in Input, Output, or DS3SW PWR Modules

Multiple INT alarms may be generated when a failure occurs on one of the main bus feeders into the DACS III-2000 system.

35. Having identified, in Step 2, multiple alarms for several input, output, or DS3SW modules, or a combination of modules, perform the following steps:

    a. Locate either Table 9-16, which is for 1024-size systems, or Table 9-17, which is for 2048-size systems, at the end of this procedure.

    b. Using the information in the table, attempt to identify a feeder that all the PWRA2 (566A) circuit packs showing INT condition type have in common.

    - If a feeder is identified, refer to your local -48V power troubleclearing procedures to correct the problem.
    - If the locations associated with the alarms identified in Step 2 *cannot* be correlated to one feeder, call your system administrator or the next level of technical support.

Table 9-10. Load Sharing for Input or Output Modules—*V1* Output

Total Output* (mv)	Load Sharing Range Minimum (mv)	Load Sharing Range Maximum (mv)
0-10	0	10
10-11	0.5	10.5
11-12	1.0	11.0
12-13	1.5	11.5
13-14	2.0	12.0
14-15	2.5	12.5
15-16	3.0	13.0
16-17	3.5	13.5
17-18	4.0	14.0
18-19	4.5	14.5
19-20	5.0	15.0
20-21	5.5	15.5
21-22	6.0	16.0
22-23	6.5	16.5
23-24	7.0	17.0
24-25	7.5	17.5
25-26	8.0	18.0
26-27	8.5	18.5
27-28	9.0	19.0
28-29	9.5	19.5
29-30	10.0	20.0
30-31	10.5	20.5
31-32	11.0	21.0
32-33	11.5	21.5
33-34	12.0	22.0
34-35	12.5	22.5
35-36	13.0	23.0
36-37	13.5	23.5
37-38	14.0	24.0
38-39	14.5	24.5
39-40	15.0	25.0
40-41	15.5	25.5
41-42	16.0	26.0

Total Output* (mv)	Load Sharing Range Minimum (mv)	Load Sharing Range Maximum (mv)
42-43	16.5	26.5
43-44	17.0	27.0
44-45	17.5	27.5
45-46	18.0	28.0
46-47	18.5	28.5
47-48	19.0	29.0
48-49	19.5	29.5
49-50	20.0	30.0
50-51	20.5	30.5
51-52	21.0	31.0
52-53	21.5	31.5

* If you have a "Total Output" that occurs on two lines, the *V1* value should fall between the "Minimum" of the first line and the "Maximum" of the following line. For example, if you have a total current of 10 mv, the *V1* value would have to be between "0 mv" and "10.5 mv".

Table 9-11. Load Sharing for Input or Output Modules—*V2* Output

Total Output* (mv)	Load Sharing Range Minimum (mv)	Load Sharing Range Maximum (mv)
0-10	0	10
10-11	0.6	10.4
11-12	1.3	10.7
12-13	2.0	11.0
13-14	2.6	11.4
14-15	3.3	11.7
15-16	4.0	12.0
16-17	4.6	12.4
17-18	5.3	12.7
18-19	6.0	13.0
19-20	6.6	13.4
20-21	7.3	13.7
21-22	8.0	14.0
22-23	8.6	14.4
23-24	9.3	14.7
24-25	10.0	15.0

* If you have a "Total Output" that occurs on two lines, the *V2* value should fall between the "Minimum" of the first line and the "Maximum" of the following line. For example, if you have a total current of 12 mv, the *V2* value would have to be between "1.3 mv" and "11.0 mv".

Table 9-12. Load Sharing for DS3SW PWR Modules with Two Power (566A) Circuit Packs— *V1* Output

Total Output* (mv)	Load Sharing Range	
	Minimum (mv)	Maximum (mv)
0-32	0	18
32-35	2	20
35-40	4	22
40-45	5	24
45-50	6	25
50-55	7.5	27
55-60	9	28
60-65	10	29
65-70	11.5	31
70-75	13	33
75-80	15	35
80-85	16.5	37
85-90	18	39
90-95	19	40
95-100	20	41.5
100-105	21	43.0
105-110	22	45.0
110-115	24	46.5
115-120	25	47.5
120-125	27	49.0
125-130	28.5	51.0
130-135	30.5	53.0
135-140	32.5	55.0
140-145	34	57.0
145-150	36	58.0
150-155	38	58.0
155-160	40	58.0

* If you have a "Total Output" that occurs on two lines, the *V1* value should fall between the "Minimum" of the first line and the "Maximum" of the following line. For example, if you have a total current of 60 mv, the *V1* value would have to be between "9 mv" and "29 mv".

Table 9-13. Load Sharing for DS3SW PWR Modules with Two Power (566A) Circuit Packs—*V2* Output

Total Output* (mv)	Load Sharing Range	
	Minimum (mv)	Maximum (mv)
0-32	0	13.5
32-35	1.5	14
35-40	2.0	15
40-45	2.5	16
45-50	3.5	17.5
50-55	4.0	18.5
55-60	4.5	19.5
60-65	5.0	20
65-70	6.0	21
70-75	6.5	22
75-80	7.5	23.5
80-85	8.0	24.5
85-90	8.5	25
90-95	9.5	26
95-100	10.0	26.5
100-105	10.5	27.5
105-110	11.5	28
110-115	12.5	28.5
115-120	13.0	29
120-125	13.5	29
125-130	14.5	29
130-135	15.5	29
135-140	16.5	29
140-145	17.0	29
145-150	18.0	29
150-155	19.0	29
155-160	20.0	29

* If you have a "Total Output" that occurs on two lines, the *V2* value should fall between the "Minimum" of the first line and the "Maximum" of the following line. For example, if you have a total current of 50 mv, the *V2* value would have to be between "3.5 mv" and "18.5 mv".

Table 9-14. Load Sharing for DS3SW PWR Modules with Four Power (566A) Circuit Packs— *V1* Output

Total Output* (mv)	Load Sharing Range	
	Minimum (mv)	Maximum (mv)
0-64	0	18
64-70	0.1	19
70-75	0.5	20.5
75-80	1.0	22
80-85	2.1	23.5
85-90	2.7	24.5
90-95	3.5	25.0
95-100	4.5	25.5
100-105	5.5	26.0
105-110	6.0	26.5
110-115	6.5	27.2
115-120	7.0	28.0
120-125	8.0	28.5
125-130	9.0	29.5
130-135	10.0	30.5
135-140	11.0	31.5
140-145	12.0	32.5
145-150	13.0	33.2
150-155	14.0	34.0
155-160	15.0	35.0

* If you have a "Total Output" that occurs on two lines, the *V1* value should fall between the "Minimum" of the first line and the "Maximum" of the following line. For example, if you have a total current of 105 mv, the *V1* value would have to be between "5.5 mv" and "26.5 mv".

Table 9-15. Load Sharing for DS3SW PWR Modules with Four Power (566A) Circuit Packs— *V2* Output

Total Output* (mv)	Load Sharing Range	
	Minimum (mv)	Maximum (mv)
0-64	0	14
64-70	0	14.5
70-75	0.2	14.9
75-80	0.5	15.5
80-85	1.0	16.0
85-90	1.3	16.5
90-95	1.7	17.0
95-100	2.1	17.5
100-105	2.5	18.0
105-110	3.0	18.5
110-115	3.5	19.0
115-120	3.9	19.3
120-125	4.1	19.6
125-130	4.5	20.0
130-135	5.0	20.4
135-140	5.5	20.8
140-145	6.0	21.1
145-150	6.4	21.5
150-155	6.7	22.0
155-160	7.0	23.0

* If you have a "Total Output" that occurs on two lines, the *V2* value should fall between the "Minimum" of the first line and the "Maximum" of the following line. For example, if you have a total current of 155 mv, the *V2* value would have to be between "6.7 mv" and "23.0 mv".

Table 9-16. Power Unit Alarms Associated with Feeders for DACS III-2000 (1024)

Feeder Name	Input Module Alarm Equipment Locations	Output Module Alarm Equipment Locations	DS3SW Module Alarm Equipment Locations
A		PWRA-1-OUT-1 PWRA-1-OUT-3 PWRA-2-OUT-1 PWRA-2-OUT-3 PWRA-3-OUT-1 PWRA-3-OUT-3 PWRA-4-OUT-1 PWRA-4-OUT-3	PWRA-SW-1
B	PWRA-1-IN-1 PWRA-1-IN-3 PWRA-2-IN-1 PWRA-2-IN-3 PWRA-3-IN-1 PWRA-3-IN-3 PWRA-4-IN-1 PWRA-4-IN-3		
C	PWRA-2-IN-1 PWRA-2-IN-3	PWRA-1-OUT-1 PWRA-1-OUT-3 PWRA-2-OUT-1 PWRA-2-OUT-3 PWRA-3-OUT-1 PWRA-3-OUT-3	PWRA-SW-3
D	PWRA-1-IN-1 PWRA-1-IN-3 PWRA-3-IN-1 PWRA-3-IN-3 PWRA-4-IN-1 PWRA-4-IN-3	PWRA-4-OUT-1 PWRA-4-OUT-3	

Table 9-17. Power Unit Alarms Associated with Feeders for DACS III-2000 (2048)

Feeder Name	Input Module Alarm Equipment Locations	Output Module Alarm Equipment Locations	DS3SW Module Alarm Equipment Locations
A	PWRA-2-IN-1 PWRA-2-IN-3 PWRA-3-IN-1 PWRA-3-IN-3 PWRA-5-IN-1 PWRA-5-IN-3	PWRA-4-OUT-1 PWRA-4-OUT-3 PWRA-6-OUT-1 PWRA-6-OUT-3 PWRA-7-OUT-1 PWRA-7-OUT-3	PWRA-SW-1-1
B	PWRA-8-IN-1 PWRA-8-IN-3	PWRA-1-OUT-1 PWRA-1-OUT-3	PWRA-SW-1-2
C	PWRA-5-IN-1 PWRA-5-IN-3	PWRA-4-OUT-1 PWRA-4-OUT-3	PWRA-SW-1-3
D	PWRA-2-IN-1 PWRA-2-IN-3 PWRA-3-IN-1 PWRA-3-IN-3 PWRA-8-IN-1 PWRA-8-IN-3	PWRA-1-OUT-1 PWRA-1-OUT-3 PWRA-6-OUT-1 PWRA-6-OUT-3 PWRA-7-OUT-1 PWRA-7-OUT-3	PWRA-SW-1-4
F	PWRA-1-IN-1 PWRA-1-IN-3 PWRA-4-IN-1 PWRA-4-IN-3 PWRA-7-IN-1 PWRA-7-IN-3	PWRA-2-OUT-1 PWRA-2-OUT-3 PWRA-5-OUT-1 PWRA-5-OUT-3 PWRA-8-OUT-1 PWRA-8-OUT-3	PWRA-SW-2-1
G	PWRA-6-IN-1 PWRA-6-IN-3	PWRA-3-OUT-1 PWRA-3-OUT-3	PWRA-SW-2-2
H	PWRA-7-IN-1 PWRA-7-IN-3	PWRA-2-OUT-1 PWRA-2-OUT-3	PWRA-SW-2-3
J	PWRA-1-IN-1 PWRA-1-IN-3 PWRA-4-IN-1 PWRA-4-IN-3 PWRA-6-IN-1 PWRA-6-IN-3	PWRA-3-OUT-1 PWRA-3-OUT-3 PWRA-5-OUT-1 PWRA-5-OUT-3 PWRA-8-OUT-1 PWRA-8-OUT-3	PWRA-SW-2-4

INT and Other PWRB, PWRC, and PWRD Failures

The procedure to correct a condition type of INT and PWRB, PWRC, and PWRD failures follows.

Procedure 9-17. Clearing INT Condition Type and Other PWRB, PWRC, and PWRD Failures in Main Controller Modules

CAUTION:
Electrostatic discharge (ESD) damage.
ESD can cause damage to the components of a DACS III-2000 system.
Wear an ESD wrist strap when working around the frame.

1. Check to see if the green LED is OFF on the power circuit pack.
   - If it is OFF, see Procedure 9-26, "Clearing Blown Primary (-48V) Fuse for BUS E."
   - If it is ON, continue this procedure at Step 2.
2. Check the alarm message to identify the failed power circuit pack.
   - If the alarm message indicates the problem is with a PWRB or PWRC power circuit pack, visually check the red LEDs on the frame to see which one failed.
     - — If both PWRB and PWRC failed, call your system administrator or the next level of technical support.
     - — If only one failed, continue this procedure at Step 3.
   - If the alarm message indicates the problem is with a PWRD power circuit pack, continue this procedure at Step 3.
3. Obtain a replacement power circuit pack.
4. Remove the failed power circuit pack identified by the alarm message. If you need detailed instructions, see Procedure 3-2, "Removing Circuit Packs."
5. Insert the replacement power circuit pack. If you need detailed instructions, see Procedure 3-1, "Installing Circuit Packs."
6. Reboot the system by simultaneously toggling the RESET ENABLE switch and pressing the RESET button.

During the reset, you may see boot messages on any terminals connected to CILINK-1 or CILINK-2. On CILINK-1, these boot messages are output at 1200 baud. On CILINK-2, the baud rate depends on the type of enhanced communications interface (ECI) circuit pack installed in the frame. For an ECI2, the baud rate is 1200; for an ECI5, 2400.

Reset completion time may be up to 6 minutes for a fully equipped 2048-size system. Smaller systems should take less time.

- If the system successfully reboots, you will see the following message:

```
login:

  <TID#0 YY-MM-DD HH:MM:SS>
A  001 REPT RST EQPT
   /* LOC:STATE */
   "MC:IS"
;

login:
```

- If the system does *not* reboot, meaning you do not receive the REPT RST EQPT message shown above or you do receive a boot message of either `BOOT FAIL` or `RESET STOPPED`, call your system administrator or the next level of technical support.

7. Verify that the alarm cleared by checking for an extinguished red LED and a lighted green LED.
8. If more alarms exist on the frame, return to Procedure 9-1, "How to Clear Alarms," to determine the next corrective action to take.

INT on Unit Controllers (UC)

The procedure to correct an INT condition type on a unit controller follows.

Procedure 9-18. Clearing INT Condition Type on Unit Controllers (UC)

CAUTION:
Electrostatic discharge (ESD) damage.
ESD can cause damage to the components of a DACS III-2000 system
Wear an ESD wrist strap when working around the frame.

1. Locate the failed unit controller identified by an alarm message or a lighted red LED.

   Check to see if there is also an INT condition type on an input interface or output interface circuit pack on protection. If there is, do *not* perform Procedure 9-18. Instead, go to Procedure 9-19.

2. Obtain a new unit controller.

3. Remove the unit controller that failed. If you need detailed instructions, see Procedure 3-2, "Removing Circuit Packs."

4. Insert the new unit controller. If you need detailed instructions, see Procedure 3-1, "Installing Circuit Packs."

5. At the interface terminal, enter the following command to restore the unit controller:

   RST-EQPT::ELOC;

   where

   ELOC = the equipment location, identified as
   UC-{1 through 4}- {IN,OUT} on a 1024-size system or
   UC-{1 through 8}-{IN,OUT} on a 2048-size system

6. Check to see if the RST process completes and the red LED goes out.

   - If the process completed and the red LED is out, you have corrected the problem.
   - If the process does *not* complete and the red LED is still on, call your system administrator or the next level of technical support.

7. If more alarms exist on the frame, return to Procedure 9-1, "How to Clear Alarms," to determine the next corrective action to take.

INT Condition Type on an Input or Output Interface Circuit Pack and a Unit Controller (UC)

If a unit controller (UC) circuit pack fails in an input or output module that already has a failed input or output interface circuit pack on protection, the troubleclearing sequence becomes critical. The following procedure provides the proper sequence for clearing this double-fault condition without causing a loss of service. If you have experienced a loss of service, contact your system administrator or next level of support immediately.

For single-fault conditions involving input, ouptut, or unit controller circuit packs, please refer to Procedure 9-1.

Procedure 9-19. Clearing INT Condition Type on Input and Output Interface Circuit Packs, and a Unit Controller (UC)

CAUTION:
Service interruption.
Failure to follow the procedure in the exact order as written affects traffic on the frame. Do not remove or insert any circuit pack until instructed to do so by this procedure.
If you are not thoroughly familiar with the DACS III-2000 system, call your system administrator or next level of technical support.

CAUTION:
Electrostatic discharge (ESD) damage.
ESD can cause damage to the components of a DACS III-2000 system. Wear an ESD wrist strap when working around the frame.

1. Obtain a replacement unit controller (UC) and a replacement input or output interface circuit pack.
2. Remove the failed input or output interface circuit pack. If you need instructions, see Procedure 3-2,"Removing Circuit Packs." If the failed pack is not on the failed unit controller, then the system responds by replacing the `MN, INT` alarm with a `MN, IMPROPRMVL` alarm. A momentary interruption of service may occur.
3. Locate the failed unit controller identified by the alarm message and a lighted red LED.
4. Remove the failed unit controller. If you need detailed instructions, see Procedure 3-2, "Removing Circuit Packs."

5. Insert the replacement unit controller. If you need detailed instructions, see Procedure 3-1, "Installing Circuit Packs."

6. Restore the new unit controller to service by entering:

   RST-EQPT::ELOC;

   where

   ELOC = the equipment location, identified as
   UC-{1 through 4}-{IN,OUT} on a 1024-size system or
   UC-{1 through 8}-{IN,OUT} on a 2048-size system

7. Check the status of the restore by looking at the output message and the red LED.

   - If the system responds with a COMPLD message and the red LED is not lighted, you have successfully restored the unit controller. Continue this procedure at Step 8.
   - If the system responds with a DENY message and the red LED is still lighted, call your system administrator or the next level of technical support.

8. Insert the replacement input or output interface circuit pack. If you need detailed instructions, see Procedure 3-1, "Installing Circuit Packs."

   This may result in an autonomous switch from protection to working of the input or output interface circuit pack and its mate.

   - If a REPT SW EQPT message appears, indicating that the replaced circuit pack and its mate have been switched to working (WKG), the interface circuit pack alarm(s) will clear. A momentary interruption of service may occur. You have corrected the problem. Continue this procedure at Step 10.
   - If a REPT SW EQPT message is not seen and the interface circuit pack alarms do not clear, continue this procedure at Step 9.

9. Switch the input or output interface circuit pack off protection by entering:

   ALW-SW-EQPT::ELOC::WKG;

   where

   ELOC = the input or output interface circuit pack replaced in Step 8 identified as {STS1IN|DS3IN}-{1 through 8}-{1 through 30} or {STS1OUT|DS3OUT}-{1 through 8}-{1 through 30}

   - If the system responds with the COMPLD message, the replaced circuit pack and its mate will be switched to working (WKG). The interface circuit pack alarm(s) will clear. A momentary interruption of service may occur. You have corrected the problem. Continue this procedure at Step 10.

- If the system responds with the DENY message, call your system administrator or next level of technical support.

10. Return the failed input or output interface circuit pack for repairs. If you need instructions for returning a failed circuit pack, see Procedure 3-11, "Returning Circuit Packs for Repair."

MAN

The condition type MAN occurs when the DISKA or DISKB hard disk drives, main controller (MC) module or the optical drive (SEC) are removed from service manually via either the RMV-EQPT command or the ED-STATE-EQPT command. For DISKA and DISKB hard disk drives, the MAN condition type also occurs when there is removal and reinsertion of the circuit pack.

The procedure to correct this problem follows.

Procedure 9-20. Clearing MAN Condition Type

1. Select from the following choices the circuit pack that is affected by the MAN condition type and follow the instructions provided:

   - If the main controller (MC) module was affected, restore it to service by entering:

     RST-EQPT::MC;

   - If the optical drive (SEC) was affected, restore it to service by entering:

     RST-EQPT::SEC;

   - If one of the hard disk drives (DISKA or DISKB) was affected, perform the following steps:

     a. Check the state of the main controller (MC) module by entering:

     RTRV-STATE-EQPT::MC;

     — If the main controller (MC) module is in the out-of-service maintenance condition (OOS-MCOND) state, continue this procedure at Step b.

     — If the main controller (MC) module is in the in-service (IS) state, put it into the out-of-service maintenance condition (OOS-MCOND) state by entering:

     ED-STATE-EQPT::MC::OOS-MCOND;

     Then continue this procedure at Step b.

b. Restore the hard disk drive back to service by entering:

```
RST-EQPT::ELOC;
```

where

ELOC = the hard disk drive; identified as either **DISKA** or **DISKB**

- If more alarms exist on the frame, return to Procedure 9-1, "How to Clear Alarms" to determine the next corrective action to take.

MISC [1]

The condition type MISC[1] occurs when an input or output circuit pack has been replaced with a bus extender (BUS EXT) circuit pack and has not been properly deprovisioned.

The procedure to correct this problem follows.

Procedure 9-21. Clearing MISC [1] Condition Type

CAUTION:
Electrostatic discharge (ESD) damage.
ESD can cause damage to the components of a DACS III-2000 system.
Wear an ESD wrist strap when working around the frame.

- If service interruption occurred, the BUS EXT circuit pack should be removed immediately and replaced with an appropriate input or output circuit pack.
- If no service interruption occurred, deprovision the slot with the BUS EXT circuit pack by entering:

  `DISC-EQPT::ELOC;`

  where

  `ELOC` = the slot with the bus extender circuit pack, identified as {STS1IN|DS3IN}-unit-slot or {STS1OUT|DS3OUT}-unit-slot. Allowable values for unit are 1 through 4 on a 1024-size system or 1 through 8 on a 2048-size system; slot, 1 through 30.

  Keep in mind that all four packs of the provisioning group (two input packs and two output packs) are deprovisioned. Also if any one of the packs in the provisioning group has a cross-connect the provisioning group cannot be deprovisioned.
- If you really want BUS EXT circuit packs in place of interface circuit packs, see Procedure 6-2, "Removing Interface Circuit Packs from Service."
- If more alarms exist on the frame, return to Procedure 9-1, "How to Clear Alarms," to determine the next corrective action to take.

MISC [2]

The condition type MISC [2} occurs when an incorrect circuit pack is inserted into an input, output or protection interface slot. The procedure to correct the problem follows.

Procedure 9-22. Clearing MISC [2] Condition Type

CAUTION:
Electrostatic discharge (ESD) damage.
ESD can cause damage to the components of a DACS III-2000 system.
Wear an ESD wrist strap when working around the frame.

1. Determine if the bay has been provisioned (DS3 or STS-1) correctly. MISC [2] errors will occur, for example, if DS3IN circuit packs have been inserted into a bay provisioned as STS-1. If the bay has not been provisioned correctly, re-provision it. If you need detailed instructions on provisioning an I/O bay, see Procedure 5-37, "Provisioning I/O Bay(s)."
2. If the unit has been provisioned correctly, replace the incorrect circuit pack with the correct circuit pack.

   For example, if a DS3IN circuit pack has been inserted into a DS3OUT slot (causing a MISC [2] alarm), replace the DS3IN circuit pack with a DS3OUT circuit pack.

   - If If you need detailed instructions on the removal or insertion of circuit packs, see Procedure 3-2, "Removing Circuit Packs" and Procedure 3-1, "Installing Circuit Packs."
3. If more alarms exist on the frame, return to Procedure 9-1, "How to Clear Alarms" to determine the next corrective action to take.

TODC

The new enhanced communications interface circuit packs (ECI2 and ECI5) maintain the date and time-of-day information. Once the information is stored on the hardware, correcting the date and time-of-day information after a system reset is not necessary.

Upon installation of the ECI2 or ECI5 circuit pack in the main controller module, an equipment alarm report appears on the local TTY terminal. The condition type of TODC indicates there is a problem with the time-of-day clock. The problem is most likely that the initial date and time-of-day information has not been entered. The condition type of TODC also appears if the circuit pack fails or a main controller module power failure has occurred and been corrected.

The procedure to correct time-of-day clock problems follows.

Procedure 9-23. Clearing TODC Condition Type

1. Set the current date and time-of-day by entering:

   ED-DATE:::DATE,TIME;

   where

   DATE = the current date specified in YYMMDD format. YY is the last two digits of the year {00 through 99}, MM is the month {01 through 12}, and DD is the day of the month {01 through 31}. If this parameter is omitted, the current value is retained.

   TIME = the current time specified in HHMMSS format. HH is the hour {00 through 23}, MM is the minutes {00 through 59}, and SS is the seconds {00 through 59}. If this parameter is omitted, the current value is retained.

   For example, to set the date for January 20, 1992 and the time for 15:20:53 p.m., you would enter

   ED-DATE:::920120,152053;

2. Verify that the alarm cleared by entering:

   RTRV-ALM-EQPT;

   - If the alarm cleared, you have corrected the TODC problem.
   - If the alarm did *not* clear all the ECI problems, return to Procedure 9-1, "How to Clear Alarms," to determine the next corrective action to take.

3. If more alarms exist on the frame, return to Procedure 9-1, "How to Clear Alarms," to determine the next corrective action to take.

EXTERR

The condition type EXTERR occurs when an error was detected external to the DACS III-2000 system. Typically this means that one of the X.25 links has lost its timing source. The EXTERR condition type may clear autonomously once X.25 network problems are corrected; however, the user on the X.25 link has to log on again.

The procedure to correct this problem follows.

Procedure 9-24. Clearing EXTERR Condition Type

CAUTION:
Electrostatic discharge (ESD) damage.
ESD can cause damage to the components of a DACS III-2000 system.
Wear an ESD wrist strap when working around the frame.

1. Check that the cable on the back of the frame has not been loosened or knocked off.
2. If the cable is secure, contact the remote location that is connected to the X.25 link.
3. If more alarms exist on the frame, return to Procedure 9-1, "How to Clear Alarms," to determine the next corrective action to take.

FRD

The condition type FRD occurs when a fraud was detected on one of the CILINKs; that is, someone tried too many unsuccessful login attempts and was locked off the link.

The procedure to correct this problem follows.

Procedure 9-25. Clearing FRD Condition Type

1. Decide how quickly you need to regain access to the system.

   - If you can wait until the time lockout value has expired, the link automatically clears.

     The initial value for time lockouts is 10 minutes but it may have been adjusted upwards to 30 minutes by your system administrator or the next level of technical support.

   - If you cannot wait for the time lockout value to expire, do the following:

     a. From another CILINK, remove the locked-out link by entering:

     ```
     RMV-LINK::CLNK;
     ```

     where

     `CLNK` = the CI link that is locked out, identified as CILINK-{1 through 6}

     An X.25 link cannot be removed from service if someone is logged into another Switched Virtual Circuit (SVC). That user must log out to allow the link to be removed to clear the alarm. Otherwise, the SVC with the FRD alarm will remain locked until the time lock expires.

     b. Restore the locked-out link by entering:

     ```
     RST-LINK::CLNK;
     ```

     where

     `CLNK` = the CI link that is locked out, identified as CILINK-{1 through 6}

   - If there are no other links in-service and there is no remote location connected via CILINK-5 or CILINK-6 that can perform the remove (RMV) and restore (RST) commands, perform a hard reset to free up the link remembering that the hard reset may tie up system resources for up to 15 minutes.

When using an X.25 link, you may experience multiple lockouts, but only one REPT message is displayed. When clearing the lockouts, only one clear message is sent.

2. If more alarms exist on the frame, return to Procedure 9-1, "How to Clear Alarms," to determine the next corrective action to take.

HITEMP

When the ambient temperature around a DACS III-2000 frame exceeds 45°C, whether due to excessive heat outside the building or broken air conditioning, several things occur:

- the optical drive (SEC) goes into the out-of-service fault (OOS-FLT) state
- the alarm LED on the optical drive (SEC) lights
- the system generates an autonomous report of the minor alarm:

```
   <TID #n YY-MM-DD HH:MM:SS>
*  <ASEQ> REPT ALM EQPT
   /* LOC:NTFCNCDE,CONDTYPE,SRVEFF:TROUBLE */
   "  SEC:MN,HITEMP,NSA,ISO "
;
```

Any attempts to use the optical drive (SEC), for example with CPY-MEM or DGN-DET-EQPT commands, will be denied until the temperature drops below 45°C and stays below that level for more than 10 to 15 minutes.

Procedure 9-26. Clearing HITEMP Condition Type

1. Correct the condition that is causing the ambient temperature to exceed the recommended operating conditions for the optical drive (SEC).

   Such corrections may take the form of temporarily using fans to increase air flow or contacting maintenance personnel to adjust building temperatures or repair faulty air conditioning.

2. Once the safe temperature has been reached and maintained for 10 to 15 minutes, the system will automatically

   - clear the alarm
   - restore the equipment
   - send the following autonomous report:

```
   <TID #n YY-MM-DD HH:MM:SS>
A  <ASEQ> REPT ALM EQPT
   /* LOC:NTFCNCDE,CONDTYPE,SRVEFF:TROUBLE */
   "  SEC:CL "
;
```

   Use of the optical drive (SEC) has been restored.

Problems Not Identified Through Alarms

This section covers the corrective maintenance procedures for those problems that are identified by means other than alarms. Specifically, it includes procedures for:

- fuse problems
- REPT CMPR MEM messages
- REPT EXCPTN SYS messages
- transmission problems reported by personnel.

Blown Primary Fuse for BUS E

When the primary (-48V) fuse for BUS E blows, use the procedure that follows to correct the problem.

Procedure 9-27. Clearing Blown Primary (-48V) Fuse for BUS E

CAUTION:
Electrostatic discharge (ESD) damage.
ESD can cause damage to the components of a DACS III-2000 system.
Wear an ESD wrist strap when working around the frame.

1. Locate the blown fuse.
   - If Fuse E1, E2, or E3 is blown, perform the following steps:
     a. Physically remove the power circuit pack from the frame that is associated with the blown fuse (the power circuit pack's green LED should not be lighted).
     b. Continue this procedure at Step 2.
   - If any other Bus E fuse is blown, continue this procedure at Step 2.
2. Obtain a replacement fuse.
3. Remove the blown fuse.
4. Insert the replacement fuse.
5. Reinsert the power circuit pack into its slot, if it was removed.
6. Check to see if the fuse blew again.
   - If the fuse did *not* blow again, you have corrected the problem.
   - If the fuse blew again, obtain a new power circuit pack.

Blown Primary Fuse for All Other BUSes Except Bus E

When the primary (-48V) fuse for any other BUS *except* BUS E blows, use the procedure that follows to correct the problem.

Procedure 9-28. Clearing Blown Primary (-48V) Fuse for All Other BUSes Except BUS E

CAUTION:
Repetitive replacement of blown fuses.
Replacing the main fuse and its parallel indicator fuse in the wrong sequence causes the fuses to blow again.
Always follow the steps of the procedure in the order presented.

CAUTION:
Electrostatic discharge (ESD) damage.
ESD can cause damage to the components of a DACS III-2000 system
Wear an ESD wrist strap when working around the frame.

1. Identify the BUS with the blown fuse by locating the lighted red lamp on the Fuse and Alarm panel.
2. Identify which indicator fuse has blown by locating the indicator fuse whose red flag has popped out. Note the fuse location (for example, B3-2).
3. Obtain replacement fuses.

   Table 9-18 shows which indicator and main fuses are associated with a particular BUS on a 1024-size system; Table 9-19 shows them for a 2048-size system. Indicator fuses are labeled with a "-2" (for example, A3-2). Main fuses are labeled with a "-1" (for example, A3-1).

   Tables 9-18 and 9-19 also show the Amp value for each fuse and the ordering codes needed for systems equipped with single or dual power feed.
4. Physically remove the associated power circuit pack from the frame; its green LED should not be lighted.

   Tables 9-18 and 9-19 show the related power circuit pack.

CAUTION:
Potential loss of service.
Pulling the wrong power circuit pack may cause service interruption.
Be sure you are removing the correct power circuit pack.

5. Remove the blown indicator fuse first.
6. Remove the main fuse second.
7. Insert the new main fuse.
8. Insert the new indicator fuse.
9. Reinsert the power circuit pack in its slot.
10. Check to see if the fuses blew again.
    - If the fuses did *not* blow again, you have cleared the blown primary fuse problem.
    - If the fuses blew again, obtain a new power circuit pack.

      For a system with single power feed, you will need a 552A power circuit pack. For a system with dual power feed, you will need a 566A power circuit pack.
11. Obtain another set of replacement fuses.
12. Physically remove the suspected power circuit pack from the frame; its green LED should not be lighted.

CAUTION:
Potential loss of service.
Pulling the wrong power circuit pack may cause service interruption.
Be sure you are removing the correct power circuit pack.

13. Remove the blown indicator fuse first.
14. Remove the main fuse second.
15. Insert the new main fuse.
16. Insert the new indicator fuse.
17. Insert the new power circuit pack into the slot.
18. Check to see if the fuses blew again.
    - If the fuses did *not* blow again, you have cleared the blown primary fuse problem.
    - If the fuses blew again, there may be problems with the backplane wiring. Call your system administrator or the next level of technical support.

Table 9-18. BUS / Fuse Chart--DACS III-2000 (1024)

If the red alarm LED for BUS . . . is lighted,	an indicator fuse in position . . .-2 has blown.	Use replacement fuses with the following values (codes):		The affected power unit is . . .	located in unit . . . module . . .
		Single Power	Dual Power		
BUS A	A2-1 A2-2	12A (KS-19780L8) .5A (70G)	20A(KS-19780L4) .5A (70G)	PWRA-1	Switch Bay SW PWR
	A3-1 A3-2	12A (KS-19780L8) .5A (70G)	20A(KS-19780L4) .5A (70G)	PWRA-1	I/O Bay #2 output
	A4-1 A4-2	12A (KS-19780L8) .5A (70G)	20A(KS-19780L4) .5A (70G)	PWRA-2	I/O Bay #2 input
	A9-1 A9-2	12A (KS-19780L8) .5A (70G)	20A(KS-19780L4) .5A (70G)	PWRA-3	I/O Bay #3 output
	A10-1 A10-2	12A (KS-19780L8) .5A (70G)	20A (KS-19780L4) .5A (70G)	PWRA-1	I/O Bay #4 output
	A11-1 A11-2	12A (KS-19780L8) .5A (70G)	20A (KS-19780L4) .5A (70G)	PWRA-2	I/O Bay #4 input
	A12-1 A12-2	12A (KS-19780L8) .5A (70G)	20A (KS-19780L4) .5A (70G)	PWRA-3	I/O Bay #1 output
BUS B	B2-1 B2-2	12A (KS-19780L8) .5A (70G)	20A(KS-19780L4) .5A (70G)	PWRA-2*	Switch Bay SW PWR
	B3-1 B3-2	12A (KS-19780L8) .5A (70G)	20A(KS-19780L4) .5A (70G)	PWRA-2	I/O Bay #2 output
	B4-1 B4-2	12A (KS-19780L8) .5A (70G)	20A(KS-19780L4) .5A (70G)	PWRA-3	I/O Bay #2 input
	B9-1 B9-2	12A (KS-19780L8) .5A (70G)	20A(KS-19780L4) .5A (70G)	PWRA-1	I/O Bay #3 input
	B10-1 B10-2	12A (KS-19780L8) .5A (70G)	20A (KS-19780L4) .5A (70G)	PWRA-2	I/O Bay #4 output
	B11-1 B11-2	12A (KS-19780L8) .5A (70G)	20A (KS-19780L4) .5A (70G)	PWRA-3	I/O Bay #4 input
	B12-1 B12-2	12A (KS-19780L8) .5A (70G)	20A (KS-19780L4) .5A (70G)	PWRA-1	I/O Bay #1 input

* With single power feed, slot PWRA-2 will contain a 552A power circuit pack.
With dual power feed, slot PWRA-2 will contain a 567A EXT circuit pack, but the fuses will still be present.

If the red alarm LED for BUS . . . is lighted,	an indicator fuse in position . . .-2 has blown.	Use replacement fuses with the following values (codes):		The affected power unit is . . .	located in unit . . . module . . .
		Single Power	Dual Power		
BUS C	C2-1 C2-2	12A (KS-19780L8) .5A (70G)	20A(KS-19780L4) .5A (70G)	PWRA-3	Switch Bay SW PWR
	C3-1 C3-2	12A (KS-19780L8) .5A (70G)	20A(KS-19780L4) .5A (70G)	PWRA-3	I/O Bay #2 output
	C4-1 C4-2	12A (KS-19780L8) .5A (70G)	20A(KS-19780L4) .5A (70G)	PWRA-1	I/O Bay #2 input
	C9-1 C9-2	12A (KS-19780L8) .5A (70G)	20A(KS-19780L4) .5A (70G)	PWRA-1	I/O Bay #3 output
	C10-1 C10-2	12A (KS-19780L8) .5A (70G)	20A (KS-19780L4) .5A (70G)	PWRA-2	I/O Bay #3 input
	C11-1 C11-2	12A (KS-19780L8) .5A (70G)	20A (KS-19780L4) .5A (70G)	PWRA-2	I/O Bay #1 input
	C12-1 C12-2	12A (KS-19780L8) .5A (70G)	20A (KS-19780L4) .5A (70G)	PWRA-1	I/O Bay #1 output
BUS D	D3-1 D3-2	12A (KS-19780L8) .5A (70G)	20A(KS-19780L4) .5A (70G)	PWRA-2	I/O Bay #3 output
	D4-1 D4-2	12A (KS-19780L8) .5A (70G)	20A(KS-19780L4) .5A (70G)	PWRA-3	I/O Bay #3 input
	D9-1 D9-2	12A (KS-19780L8) .5A (70G)	20A(KS-19780L4) .5A (70G)	PWRA-3	I/O Bay #4 output
	D10-1 D10-2	12A (KS-19780L8) .5A (70G)	20A (KS-19780L4) .5A (70G)	PWRA-1	I/O Bay #4 input
	D11-1 D11-2	12A (KS-19780L8) .5A (70G)	20A (KS-19780L4) .5A (70G)	PWRA-3	I/O Bay #1 input
	D12-1 D12-2	12A (KS-19780L8) .5A (70G)	20A (KS-19780L4) .5A (70G)	PWRA-2	I/O Bay #1 output

Table 9-19. BUS / Fuse Chart – DACS III-2000 (2048)

If the red alarm LED for BUS . . . is lighted,	an indicator fuse in position . . .-2 has blown.	Use replacement fuses with the following values (codes):		The affected power unit is . . .	located in unit . . . module . . .
		Single Power	Dual Power		
BUS A	A2-1 A2-2	12A (KS-19780L8) .5A (70G)	20A (KS-19780L4) .5A (70G)	PWRA-1	Switch Bay #1 SW PWR
	A3-1 A3-2	12A (KS-19780L8) .5A (70G)	20A (KS-19780L4) .5A (70G)	PWRA-1	I/O Bay #4 output
	A4-1 A4-2	12A (KS-19780L8) .5A (70G)	20A (KS-19780L4) .5A (70G)	PWRA-1	I/O Bay #3 input
	A5-1 A5-2	12A (KS-19780L8) .5A (70G)	20A (KS-19780L4) .5A (70G)	PWRA-1	I/O Bay #2 input
	A6-1 A6-2	12A (KS-19780L8) .5A (70G)	20A (KS-19780L4) .5A (70G)	PWRA-1	I/O Bay #5 input
	A7-1 A7-2	12A (KS-19780L8) .5A (70G)	20A (KS-19780L4) .5A (70G)	PWRA-1	I/O Bay #6 output
	A8-1 A8-2	12A (KS-19780L8) .5A (70G)	20A (KS-19780L4) .5A (70G)	PWRA-1	I/O Bay #7 output
BUS B	B2-1 B2-2	12A (KS-19780L8) .5A (70G)	20A (KS-19780L4) .5A (70G)	PWRA-2	Switch Bay #1 SW PWR
	B3-1 B3-2	12A (KS-19780L8) .5A (70G)	20A (KS-19780L4) .5A (70G)	PWRA-2	I/O Bay #4 output
	B4-1 B4-2	12A (KS-19780L8) .5A (70G)	20A (KS-19780L4) .5A (70G)	PWRA-2	I/O Bay #2 input
	B5-1 B5-2	12A (KS-19780L8) .5A (70G)	20A (KS-19780L4) .5A (70G)	PWRA-1	I/O Bay #1 output
	B6-1 B6-2	12A (KS-19780L8) .5A (70G)	20A (KS-19780L4) .5A (70G)	PWRA-2	I/O Bay #5 input
	B7-1 B7-2	12A (KS-19780L8) .5A (70G)	20A (KS-19780L4) .5A (70G)	PWRA-2	I/O Bay #7 output
	B8-1 B8-2	12A (KS-19780L8) .5A (70G)	20A (KS-19780L4) .5A (70G)	PWRA-1	I/O Bay #8 input

If the red alarm LED for BUS . . . is lighted,	an indicator fuse in position . . .-2 has blown.	Use replacement fuses with the following values (codes):		The affected power unit is . . .	located in unit . . . module . . .
		Single Power	Dual Power		
BUS C	C2-1 C2-2	12A (KS-19780L8) .5A (70G)	20A (KS-19780L4) .5A (70G)	PWRA-3	Switch Bay #1 SW PWR
	C3-1 C3-2	12A (KS-19780L8) .5A (70G)	20A (KS-19780L4) .5A (70G)	PWRA-3	I/O Bay #4 output
	C4-1 C4-2	12A (KS-19780L8) .5A (70G)	20A (KS-19780L4) .5A (70G)	PWRA-2	I/O Bay #3 input
	C5-1 C5-2	12A (KS-19780L8) .5A (70G)	20A (KS-19780L4) .5A (70G)	PWRA-2	I/O Bay #1 output
	C6-1 C6-2	12A (KS-19780L8) .5A (70G)	20A (KS-19780L4) .5A (70G)	PWRA-3	I/O Bay #5 input
	C7-1 C7-2	12A (KS-19780L8) .5A (70G)	20A (KS-19780L4) .5A (70G)	PWRA-2	I/O Bay #6 output
	C8-1 C8-2	12A (KS-19780L8) .5A (70G)	20A (KS-19780L4) .5A (70G)	PWRA-2	I/O Bay #8 input
BUS D	D2-1 D2-2	12A (KS-19780L8) .5A (70G)	20A (KS-19780L4) .5A (70G)	PWRA-4	Switch Bay #1 SW PWR
	D3-1 D3-2	12A (KS-19780L8) .5A (70G)	20A (KS-19780L4) .5A (70G)	PWRA-3	I/O Bay #3 input
	D4-1 D4-2	12A (KS-19780L8) .5A (70G)	20A (KS-19780L4) .5A (70G)	PWRA-3	I/O Bay #2 input
	D5-1 D5-2	12A (KS-19780L8) .5A (70G)	20A (KS-19780L4) .5A (70G)	PWRA-3	I/O Bay #1 output
	D6-1 D6-2	12A (KS-19780L8) .5A (70G)	20A (KS-19780L4) .5A (70G)	PWRA-3	I/O Bay #6 output
	D7-1 D7-2	12A (KS-19780L8) .5A (70G)	20A (KS-19780L4) .5A (70G)	PWRA-3	I/O Bay #7 output
	D8-1 D8-2	12A (KS-19780L8) .5A (70G)	20A (KS-19780L4) .5A (70G)	PWRA-3	I/O Bay #8 input

If the red alarm LED for BUS . . . is lighted,	an indicator fuse in position . . .-2 has blown.	Use replacement fuses with the following values (codes):		The affected power unit is . . .	located in unit . . . module . . .
		Single Power	Dual Power		
BUS F	F2-1 F2-2	12A (KS-19780L8) .5A (70G)	20A (KS-19780L4) .5A (70G)	PWRA-1	Switch Bay #2 SW PWR
	F3-1 F3-2	12A (KS-19780L8) .5A (70G)	20A (KS-19780L4) .5A (70G)	PWRA-1	I/O Bay #4 input
	F4-1 F4-2	12A (KS-19780L8) .5A (70G)	20A (KS-19780L4) .5A (70G)	PWRA-1	I/O Bay #2 output
	F5-1 F5-2	12A (KS-19780L8) .5A (70G)	20A (KS-19780L4) .5A (70G)	PWRA-1	I/O Bay #1 input
	F6-1 F6-2	12A (KS-19780L8) .5A (70G)	20A (KS-19780L4) .5A (70G)	PWRA-1	I/O Bay #5 output
	F7-1 F7-2	12A (KS-19780L8) .5A (70G)	20A (KS-19780L4) .5A (70G)	PWRA-1	I/O Bay #7 input
	F8-1 F8-2	12A (KS-19780L8) .5A (70G)	20A (KS-19780L4) .5A (70G)	PWRA-1	I/O Bay #8 output
BUS G	G2-1 G2-2	12A (KS-19780L8) .5A (70G)	20A (KS-19780L4) .5A (70G)	PWRA-2	Switch Bay #2 SW PWR
	G3-1 G3-2	12A (KS-19780L8) .5A (70G)	20A (KS-19780L4) .5A (70G)	PWRA-2	I/O Bay #4 input
	G4-1 G4-2	12A (KS-19780L8) .5A (70G)	20A (KS-19780L4) .5A (70G)	PWRA-1	I/O Bay #3 output
	G5-1 G5-2	12A (KS-19780L8) .5A (70G)	20A (KS-19780L4) .5A (70G)	PWRA-2	I/O Bay #2 output
	G6-1 G6-2	12A (KS-19780L8) .5A (70G)	20A (KS-19780L4) .5A (70G)	PWRA-2	I/O Bay #5 output
	G7-1 G7-2	12A (KS-19780L8) .5A (70G)	20A (KS-19780L4) .5A (70G)	PWRA-1	I/O Bay #6 input
	G8-1 G8-2	12A (KS-19780L8) .5A (70G)	20A (KS-19780L4) .5A (70G)	PWRA-2	I/O Bay #7 input

If the red alarm LED for BUS . . . is lighted,	an indicator fuse in position . . .-2 has blown.	Use replacement fuses with the following values (codes):		The affected power unit is . . .	located in unit . . . module . . .
		Single Power	Dual Power		
BUS H	H2-1 H2-2	12A (KS-19780L8) .5A (70G)	20A (KS-19780L4) .5A (70G)	PWRA-3	Switch Bay #2 SW PWR
	H3-1 H3-2	12A (KS-19780L8) .5A (70G)	20A (KS-19780L4) .5A (70G)	PWRA-2	I/O Bay #3 output
	H4-1 H4-2	12A (KS-19780L8) .5A (70G)	20A (KS-19780L4) .5A (70G)	PWRA-3	I/O Bay #2 output
	H5-1 H5-2	12A (KS-19780L8) .5A (70G)	20A (KS-19780L4) .5A (70G)	PWRA-2	I/O Bay #1 input
	H6-1 H6-2	12A (KS-19780L8) .5A (70G)	20A (KS-19780L4) .5A (70G)	PWRA-2	I/O Bay #6 input
	H7-1 H7-2	12A (KS-19780L8) .5A (70G)	20A (KS-19780L4) .5A (70G)	PWRA-3	I/O Bay #7 input
	H8-1 H8-2	12A (KS-19780L8) .5A (70G)	20A (KS-19780L4) .5A (70G)	PWRA-2	I/O Bay #8 output
BUS J	J2-1 J2-2	12A (KS-19780L8) .5A (70G)	20A (KS-19780L4) .5A (70G)	PWRA-4	Switch Bay #2 SW PWR
	J3-1 J3-2	12A (KS-19780L8) .5A (70G)	20A (KS-19780L4) .5A (70G)	PWRA-3	I/O Bay #4 input
	J4-1 J4-2	12A (KS-19780L8) .5A (70G)	20A (KS-19780L4) .5A (70G)	PWRA-3	I/O Bay #3 output
	J5-1 J5-2	12A (KS-19780L8) .5A (70G)	20A (KS-19780L4) .5A (70G)	PWRA-3	I/O Bay #1 input
	J6-1 J6-2	12A (KS-19780L8) .5A (70G)	20A (KS-19780L4) .5A (70G)	PWRA-3	I/O Bay #5 output
	J7-1 J7-2	12A (KS-19780L8) .5A (70G)	20A (KS-19780L4) .5A (70G)	PWRA-3	I/O Bay #6 input
	J8-1 J8-2	12A (KS-19780L8) .5A (70G)	20A (KS-19780L4) .5A (70G)	PWRA-3	I/O Bay #8 output

Blown Secondary Fuse in the Main Controller (MC) Module

When the secondary fuse of the main controller (MC) module blows, use the procedure that follows to correct the problem.

Procedure 9-29. Clearing Blown Secondary Fuse in Main Controller (MC) Module

CAUTION:
Electrostatic discharge (ESD) damage.
ESD can cause damage to the components of a DACS III-2000 system.
Wear an ESD wrist strap when working around the frame.

1. Check the alarm message, the LEDs on fuse board E (FBE), and Table 9-20 to identify the fuse that failed in the main controller (MC) module.

   (Specific circuit pack names are panel stamped next to the associated fuse on FBE.)

Table 9-20. Main Controller Module Fuse Board (FBE) Fuse Designations—(1024) and (2048) Systems

Fuse Location	Fuse Code	Fuse Value
PRI/SEC	77C	5 A
SSC	77C	5 A
SCI	77J	7.5 A
MTC	77C	5 A
UI	77J	7.5 A
CPU	77C	5 A
MX	77C	5 A
ECI	77C	5 A

2. Replace the fuse that has the red LED lighted by prying the fuse from its location using an orange stick or other flat wooden object that fits behind the head of the fuse.
3. Check to see if the fuse blew again.
   - If you replaced the PRI/SEC fuse, call your system administrator or the next level of technical support for further instructions on restoring the hard disk drives and the main controller (MC) module into service.

- If the fuse blew again and you did *not* replace the PRI/SEC fuse, replace the circuit pack associated with the fuse, then replace the fuse again.
  - — If the fuse blows again, return the original circuit pack to the module and call your system administrator or the next level of technical support.
  - — If the fuse does not blow again, you have corrected the problem.
- If the fuse did *not* blow again and you did *not* replace the PRI/SEC fuse, reboot the system by simultaneously toggling the RESET ENABLE switch and pressing the RESET button.

  During the reset, you may see boot messages on any terminals connected to CILINK-1 or CILINK-2. On CILINK-1, these boot messages are output at 1200 baud. On CILINK-2, the baud rate depends on the type of enhanced communications interface (ECI) circuit pack installed in the frame. For an ECI2, the baud rate is 1200; for an ECI5, 2400.

  Reset completion time may be up to 6 minutes for a fully equipped 2048-size system. Smaller systems should take less time.

  - — If the system successfully reboots, the main controller (MC) module will be in-service (`IS`) and you will see the following message:

    ```
    login:

       <TID#0 YY-MM-DD HH:MM:SS>
    A  001 REPT RST EQPT
       /* LOC:STATE */
       "MC:IS"
    ;
    login:
    ```

    With the main controller (MC) module in-service (`IS`), you have corrected the problem.
  - — If the system does *not* reboot, meaning you do not receive the REPT RST EQPT message shown above or you do receive a boot message of either `BOOT FAIL` or `RESET STOPPED`, call your system administrator or the next level of technical support.

Blown Secondary Fuse in Switch Power Module

When the secondary fuse in a switch power module blows, use the procedure that follows to correct the problem.

Procedure 9-30. Clearing Blown Secondary Fuse in Switch Power Modules

CAUTION:
Electrostatic discharge (ESD) damage.
ESD can cause damage to the components of a DACS III-2000 system.
Wear an ESD wrist strap when working around the frame.

1. Identify the fuse that failed in the switch power module by checking
   - the alarm message
   - the LEDs on fuse boards (FBA and FBB)
   - Table 9-21 for a 1024-size system; Table 9-22 for a 2048-size system
2. Physically remove the DS3SW CTR circuit pack, which has the lighted red alarm LED, from the frame.
3. Remove the identified failed fuse by prying the fuse from its location using an orange stick or other flat wooden object that fits behind the head of the fuse.
4. Insert a replacement fuse.
5. Check to see if the fuse blew again.
   - If the fuse blew again, the failure cannot be cleared by replacing a circuit pack or a fuse. Refer to the schematic drawing and check the wiring between the switch power module and the switch module. If you need technical assistance, call your system administrator or the next level of technical support.
   - If the fuse did *not* blow again, continue the procedure at Step 6.
6. Reinsert the circuit pack that was removed in Step 2.
7. Check to see if the fuse blew again.
   - If the fuse blew again, perform the following steps:
     a. Physically remove the circuit pack, identified in Step 2, again.
     b. Replace the blown fuse again.
   c. Obtain a replacement DS3SW CTR circuit pack.

d. Insert the new circuit pack into the slot.

e. Check to see if the fuse blew again.

— If the fuse blew again, check the connectors on the back of the circuit pack and backplane. If any pins are bent, straighten them.

— If the fuse blew again, but everything checks out on the circuit pack and backplane, try another circuit pack.

— If you have checked the preceding two steps and you still have a problem, call your system administrator or the next level of technical support.

— If the fuse did *not* blow again, you have successfully corrected the problem.

- If the fuse did *not* blow again and more alarms exist on the frame, return to Procedure 9-1, "How to Clear Alarms," to determine the next corrective action to take.
- If the fuse did *not* blow again and there are no more alarms on the frame, you have corrected the problem.

Table 9-21. DS3SW CTR Fuse Chart—(1024) System

SW PWR MOD		SW MOD			
		Terminal			
Fuse Board	Fuse Pos.	+5 V	Ret	Mod	DS3W CTR
FBA	C	E1	E26	2	1
"	D	E2	E26	2	2
"	E	E3	E26	2	3
"	F	E4	E26	2	4
"	G	E5	E26	2	5
"	H	E6	E26	2	6
"	J	E7	E26	2	7
"	K	E8	E26	2	8
"	L	E9	E26	2	9
"	M	E10	E26	2	10
"	N	E11	E26	2	11
"	P	E12	E26	2	12
FBB(1)	A	E13	E26	2	13
"	B	E14	E26	2	14
"	C	E15	E26	2	15
"	D	E16	E26	2	16
FBB(1)	E	E1	E26	1	1
"	F	E2	E26	1	2
"	G	E3	E26	1	3
"	H	E4	E26	1	4
"	J	E5	E26	1	5
"	K	E6	E26	1	6
"	L	E7	E26	1	7
"	M	E8	E26	1	8
"	N	E9	E26	1	9
"	P	E10	E26	1	10
FBB(2)	A	E11	E26	1	11
"	B	E12	E26	1	12
"	C	D13	E26	1	13
"	D	E14	E26	1	14
"	E	E15	E26	1	15
"	F	E16	E26	1	16

Table 9-22. DS3SW CTR Fuse Chart—(2048) System

SW PWR MOD			SW MOD			
			Terminal			
Fuse Board	Fuse Pos.	Mod	+5 V	Ret	Mod	DS3SW CTR
FBB(1)	E	1	E1	E26	1	1
"	F	1	E2	E26	1	2
"	G	1	E3	E26	1	3
"	H	1	E4	E26	1	4
"	J	1	E5	E26	1	5
"	K	1	E6	E26	1	6
"	L	1	E7	E26	1	7
"	M	1	E8	E26	1	8
"	N	1	E9	E26	1	9
"	P	1	E10	E26	1	10
FBB(2)	A	1	E11	E26	1	11
"	B	1	E12	E26	1	12
"	C	1	E13	E26	1	13
"	D	1	E14	E26	1	14
"	E	1	E15	E26	1	15
"	F	1	E16	E26	1	16
FBA	C	1	E1	E26	2	1
"	D	1	E2	E26	2	2
"	E	1	E3	E26	2	3
"	F	1	E4	E26	2	4
"	G	1	E5	E26	2	5
"	H	1	E6	E26	2	6
"	J	1	E7	E26	2	7
"	K	1	E8	E26	2	8
"	L	1	E9	E26	2	9
"	M	1	E10	E26	2	10
"	N	1	E11	E26	2	11
"	P	1	E12	E26	2	12
FBB(1)	A	1	E13	E26	2	13
"	B	1	E14	E26	2	14
"	C	1	E15	E26	2	15
"	D	1	E16	E26	2	16

SW PWR MOD			SW MOD			
			Terminal			
Fuse Board	Fuse Pos.	Mod	+5 V	Ret	Mod	DS3SW CTR
FBB(1)	E	2	E1	E26	3	1
"	F	2	E2	E26	3	2
"	G	2	E3	E26	3	3
"	H	2	E4	E26	3	4
"	J	2	E5	E26	3	5
"	K	2	E6	E26	3	6
"	L	2	E7	E26	3	7
"	M	2	E8	E26	3	8
"	N	2	E9	E26	3	9
"	P	2	E10	E26	3	10
FBB(2)	A	2	E11	E26	3	11
"	B	2	E12	E26	3	12
"	C	2	E13	E26	3	13
"	D	2	E14	E26	3	14
"	E	2	E15	E26	3	15
"	F	2	E16	E26	3	16
FBA	C	2	E1	E26	4	1
"	D	2	E2	E26	4	2
"	E	2	E3	E26	4	3
"	F	2	E4	E26	4	4
"	G	2	E5	E26	4	5
"	H	2	E6	E26	4	6
"	J	2	E7	E26	4	7
"	K	2	E8	E26	4	8
"	L	2	E9	E26	4	9
"	M	2	E10	E26	4	10
"	N	2	E11	E26	4	11
"	P	2	E12	E26	4	12
FBB(1)	A	2	E13	E26	4	13
"	B	2	E14	E26	4	14
"	C	2	E15	E26	4	15
"	D	2	E16	E26	4	16

REPT CMPR MEM Messages

The DACS III-2000 system performs self-monitoring activities to detect errors. These random checks are known as frame audits. Should the system discover memory mismatches, they are reported to the user through the REPT CMPR MEM message.

A sample of a memory comparison report follows:

```
   FJ123455#3 91-07-01 10:26:44
A  010 REPT CMPR MEM
   /* MEM1,ADDR1,MEM2,ADDR2:DATA1,DATA2 */
   " PRI,4215802,WKG,42234445:O,O "
;
```

Procedure 9-31. Responding to REPT CMPR MEM Message

If the REPT CMPR MEM message is displayed more than three times in 24 hours or is seen repeatedly for more than three days, call your system administrator or the next level of technical support.

REPT EXCPTN SYS Messages

The REPT EXCPTN SYS message reports detailed information about events that indicate system problems. If the event is related to an actual failure in the system, a subsequent REPT ALM EQPT message is generated. REPT EXCPTN SYS messages that possibly require action can be identified by the ECASE parameter that is part of the CONDDESCR parameter.

```
   <TID #n YY-MM-DD HH:MM:SS>
A  <ASEQ> REPT EXCPTN SYS
    /* LOC:CONDTYPE,CONDDESCR, (MULTI-LINE), */
    /* AIDET, */
    /* MEASURED (MULTI-LINE) */
    " <LOC:CONDTYPE,CONDDESCR> "
    " <DETAILED LOCATION> "
    " <MEASURED DATA> "
;
```

where

LOC = the type of equipment involved in the reporting: CPU, ECI, UC, PRI, SEC, DISKA, DISKB, or SSC

CONDTYPE = the type of indications associated with the specified equipment entity. Possible CONDTYPEs are CONTR, INT, MISC [1], MISC [100], PROGFLT and SSERROR.

CONDDESCR = a detailed description of the reporting condition. The condition description includes one or more of the following parameters:

- exception case (ECASE)
- return code (RC)
- sequence of the event (SEQ)
- name of the system process executing when the event occurred (PROC)
- name of the file containing the software (FILE)
- decision point defined in the program (DP)

Save copies of all REPT EXCPTN SYS messages in case you are unable to resolve the problem and need to call your system administrator or the next level of technical support.

The procedure for handling a REPT EXCPTN SYS message follows.

Procedure 9-32. Responding to REPT EXCPTN SYS

Check the LOC and CONDDESCR fields in the REPT EXCPTN SYS message.

- If ECASE=EXCEPTION and LOC=CPU, ECI, or UC-{1 through 8}- {IN,OUT}, the piece of equipment is so badly corrupted that it stopped all processing and parked. The required action depends on the equipment involved:

  — If the equipment involved is the CPU or the ECI, reboot the system by simultaneously toggling the RESET ENABLE switch and pressing the RESET button.

  During the reset, you may see boot messages on any terminals connected to CILINK-1 or CILINK-2. On CILINK-1, these boot messages are output at 1200 baud. On CILINK-2, the baud rate depends on the type of enhanced communications interface (ECI) circuit pack installed in the frame. For an ECI2, the baud rate is 1200; for an ECI5, 2400.

  Reset completion time may be up to 6 minutes for a fully equipped 2048-size system. Smaller systems should take less time.

  - If the system successfully reboots, you will see the following message:

```
login:

   <TID#0 YY-MM-DD HH:MM:SS>
A   001 REPT RST EQPT
   /*  LOC:STATE */
   "MC:IS"
;

login:
```

  - If the system does *not* reboot, meaning you do not receive the REPT RST EQPT message shown above or you do receive a boot message of either `BOOT FAIL` or `RESET STOPPED`, call your system administrator or the next level of technical support.

  — If the equipment involved is a unit controller, perform the following steps:

a. remove the unit controller from service by entering:

```
RMV-EQPT::ELOC;
```

where

ELOC = the unit controller, identified as
UC-{1 through 4}-{IN,OUT} on a 1024-size system or
UC-{1 through 8}-{IN,OUT} on a 2048-size system

b. restore that unit controller by entering:

```
RST-EQPT::ELOC;
```

where

ELOC = the unit controller removed from service

- If ECASE=PWRA-SW-{1 through 3}, PWRA-SW-{1,2}-{1 through 4}, PWRA-{1-4}-{IN,OUT}-{1-3} or PWRA-{1-8}-{IN,OUT}-{1-3}, a center stage power circuit pack or one of the three power circuit packs in the unit controller is suspect.

  The required action depends on whether any activity has occurred within the last minute. Activity is defined as extraction or insertion of a power circuit pack or the loss of primary power, whether momentary or long-term, to a power circuit pack. For example, a common activity that causes momentary power loss is the replacement of a fuse.

  — If no activity has occurred, call your system administrator or the next level of technical support.

  — If activity has occurred, ignore the message. Most likely, something caused the power feed to send an alarm and then the power feed cleared itself.

- For any other ECASE messages, call your system administrator or the next level of technical support.

Transmission Problems Reported by Personnel

The procedure that follows is to be used if a transmission problem, detected by downstream equipment, has been tracked to your DACS III-2000 system and there is no indication of the problem on your system.

Procedure 9-33. Clearing Transmission Problems Reported by Personnel

CAUTION:
Electrostatic discharge (ESD) damage.
ESD can cause damage to the components of a DACS III-2000 system.
Wear an ESD wrist strap when working around the frame.

1. Check office records to determine which output port is being indicated by the downstream office.
2. Determine and write down the input, output, and DS3SW circuit packs involved in the problem by entering:

   `RTRV-PATH-{STS1|T3}::TOPT;`

   where

   `TOPT` = the port specified in Step 1.
3. Switch the output circuit pack to protection by entering:

   `SW-TOPROTN-EQPT::ELOC;`

   where

   `ELOC` = the output circuit pack recorded in Step 2

   - If the transmission problem at the downstream equipment clears, continue this procedure at Step 4.
   - If the transmission problem at the downstream equipment does *not* clear, perform the following steps:

     a. Allow the output circuit pack back to switch to working by entering:

     `ALW-SW-EQPT::ELOC::WKG;`

     where

     `ELOC` = the output circuit pack specified and recorded in Step 2

     b. Continue this procedure at Step 5

4. Having isolated the problem to the output circuit pack, perform the following steps:

   a. Obtain a new output circuit pack.

   b. Unseat the output circuit pack specified in Step 2. If you need detailed instructions, see Procedure 3-2, "Removing Circuit Packs."

   c. Set the LBO to match those of the unseated output circuit pack. If you need detailed instructions, see Procedure 3-6, "Setting Line Buildout (LBO)."

   d. Insert the new output circuit pack. If you need detailed instructions, see Procedure 3-1, "Installing Circuit Packs."

   e. Allow the output circuit pack to switch to working by entering:

      ALW-SW-EQPT::ELOC::WKG;

      where

      ELOC = the output circuit pack specified and recorded in Step 2

      - If the problem clears, you have successfully corrected the problem.
      - If the problem does *not* clear, call your system administrator or the next level of technical support.

5. Switch the input circuit pack to protection by entering:

   SW-TOPROTN-EQPT::ELOC;

   where

   ELOC = the input circuit pack recorded in Step 2

   - If the transmission problem at the downstream equipment clears, continue this procedure at Step 6.
   - If the transmission problem at the downstream equipment does *not* clear, perform the following steps:

     a. Allow the input circuit pack back to switch to working by entering:

        ALW-SW-EQPT::ELOC::WKG;

        where

        ELOC = the input circuit pack recorded in Step 2

     b. Continue this procedure at Step 7.

6. Having isolated the problem to the input circuit pack, perform the following steps:

   a. Obtain a new input circuit pack.

   b. Unseat the input circuit pack specified in Step 2. If you need detailed instructions, see Procedure 3-2, "Removing Circuit Packs."

   c. Insert the new input circuit pack. If you need detailed instructions, see Procedure 3-1, "Installing Circuit Packs."

   d. Allow the input circuit pack back to switch to working by entering:

   ALW-SW-EQPT::ELOC::WKG;

   where

   ELOC = the input circuit pack specified and recorded in Step 2

   - If the problem clears, you have successfully corrected the problem.
   - If the problem does *not* clear, call your system administrator or the next level of technical support.

7. Switch the DS3SW circuit pack to protection by entering:

   SW-TOPROTN-EQPT::ELOC;

   where

   ELOC = the DS3SW circuit pack recorded in Step 2

   - If the transmission problem at the downstream equipment clears, continue this procedure at Step 8.
   - If the transmission problem at the downstream equipment does *not* clear, perform the following steps:

     a. Allow the DS3SW circuit pack back to switch to working by entering:

     ALW-SW-EQPT::ELOC::WKG;

     where

     ELOC = the DS3SW circuit pack specified and recorded in Step 2

     b. Call your system administrator or the next level of technical support.

8. Having isolated the problem to the DS3SW circuit pack, perform the following steps:

   a. Obtain a new DS3SW circuit pack.

   b. Unseat the DS3SW circuit pack specified in Step 2. If you need detailed instructions, see Procedure 3-2, "Removing Circuit Packs."

c. Insert the new DS3SW circuit pack. If you need detailed instructions, see Procedure 3-1, "Installing Circuit Packs."

d. Allow the DS3SW circuit pack back to switch to working by entering:

```
ALW-SW-EQPT::ELOC::WKG;
```

where

ELOC = the DS3SW circuit pack specified and recorded in Step 2

- If the problem clears, you have successfully corrected the problem.
- If the problem does *not* clear, call your system administrator or the next level of technical support.

9. If more alarms exist on the frame, return to Procedure 9-1, "How to Clear Alarms," to determine the next corrective action to take.

Replacing an FBE Fuse Board in the MC

When the FBE fuse board in the MC blows, use the procedure that follows to correct the problem. You must have the privilege code of M5 to perform this procedure.

CAUTION:
Electrostatic discharge (ESD) damage.
ESD can cause damage to the components of a DACS III-2000 system.
Wear an ESD wrist strap when working around the frame.

Procedure 9-34. Replace an FBE Fuse Board in the MC

1. Remove the backplane cover and visually inspect the backplane pins for connector 0148; verify that pins 000, 100, 001 and 101 (four pins in the bottom rows) are not shorted together. See Figure 9-8 for pin positions.

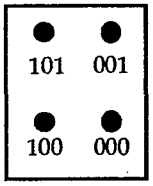

Figure 9-8. Backplane Pin Positions (000, 100, 001, and 101)

2. Verify that the replacement FBE is appropriately fused. For information on fusing see Table 9-20.
3. Verify that no alarms exist on the system by entering:

   RTRV-ALM-ALL;

   — If there are no alarms, the system responds with the following message:

   ```
   <TID n# YY-MM-DD HH:MM:SS>
   M RTRV ALM ALL::<ELOC:CTAG:NOCD,COTY,SRV> COMPLD
   ;
   ```

   — If there *are* alarms, the system responds with the following message:

```
  <TID n# YY-MM-DD HH:MM:SS>
M RTRV ALM ALL::<ELOC:CTAG:NOCD,COTY,SRV> COMPLD
 /* LOC:NTFCNDE,CONDTYPE,SRVEFF */
  "<LOC:NTFCNDE,CONDTYPE,SRVEFF>"
;
```

where

NTFCNCDE = the notification code: CR, indicates a critical alarm; MJ a major alarm; MN, a minor alarm.

4. If alarms exist, clear the alarms before proceeding. See Procedure 9-1, "How to Clear Alarms," to determine the next corrective action to take.
5. Remove the optical cartridge. See Procedure 3-8, "Removing Optical Cartridges," for detailed instructions.
6. While the MC is still in service, issue the following command to back up the frame's database to the secondary storage media. If you need detailed information on this command, see Procedure 8-3, "Making Backups to Optical Cartridges."
   - If you do *not* have alternate maps, enter the command:

     CPY-MEM:::PRI,SEC,DBASE;

   - If you have alternate maps, enter the command:

     CPY-MEM:::PRI,SEC,BOTH;

     — If the system responds with the COMPLD message, the copy completed successfully.

     — If the system responds with the DENY message, check the error code in Appendix C for an explanation. Call your system administrator or the next level of technical support for assistance, if necessary.
7. Enter the command to put the MC in the OOS-MCOND state:

   ED-STATE-EQPT::MC::OOS-MCOND;
8. Remove the primary storage unit from the frame using the following commands for frames running R3.0 or later:
   - **RMV-EQPT::DISKA;**
   - **RMV-EQPT::DISKB::Y;** (DISKB must be forced)
9. Disengage the PRI3 and SEC packs from the backplane connectors; leave them in their slots.
10. Remove the PWRB (AWN1) pack from the shelf and store it in an ESD-safe bag. Inspect the same backplane pins as in (Step 1) from the front (circuit pack) side of the backplane.
11. Remove the ECI pack from the shelf and store it in an ESD-safe bag.

12. Insert an insulated 3/16" screwdriver under the lock spring on the bottom of the FBE pack.
13. Place your fingers behind the fuse blocks on the fuse board and pull the FBE pack from the shelf. The MJ, FAIL, CPU and SSC red LEDs will light.
14. Replace the FBE pack with the spare which was verified in Step 2.
15. Reseat the PRI and SEC3 packs.
16. Re-insert the ECI pack.
17. Reseat the PWRB (AWN1) pack. The PRI, SEC, SSC, CPU and ECI red LEDs will light.
18. Insert the optical cartridge. See Procedure 3-7, "Inserting Optical Cartridges," if you need detailed instructions.
19. Initiate a hard RESET of the MC. See Procedure 10-1, "Recovering from DISKA failure when DISKB and SEC are In-service," Step 8, if you need detailed instructions. The system boots from SEC.
20. Log in to the system with the default login.
21. Validate the system with **ENT-SYSID**.
22. To clear the alarm, enter:
    - **RST-EQPT::DISKA:::Y;**
    - **RST-EQPT::DISKB;**
23. Reset the MC again.
24. Ignore the following REPT EXCPTN SYS message that appears:

```
"ECI:PROGFLT,\"ECASE=E101, RC=0-0, SEQ=<value>,,
 PROC=CIx1Hdlr2, FILE=CIXL13xmt.c, DP=1\"
,
\" <value>
    05\""
;
```

25. Enter **ED-DATE** to clear TODC alarm (see Procedure 9-22).

26. Verify that no alarms exist on the system by entering:

RTRV-ALM-ALL;

— If there are no alarms, the system responds with the following message:

```
  <TID n# YY-MM-DD HH:MM:SS>
M RTRV ALM ALL::<ELOC:CTAG:NOCD,COTY,SRV> COMPLD
;
```

— If there *are* alarms, the system responds with the following message:

```
  <TID n# YY-MM-DD HH:MM:SS>
M RTRV ALM ALL::<ELOC:CTAG:NOCD,COTY,SRV>
   COMPLD
 /* LOC:NTFCNDE,CONDTYPE,SRVEFF */
  "<LOC:NTFCNDE,CONDTYPE,SRVEFF>"
;
```

where

NTFCNCDE = the notification code: CR, indicates a critical alarm; MJ a major alarm; MN, a minor alarm.

27. If alarms exist, clear the alarms using Procedure 9-1, "How to Clear Alarms," to determine the next corrective action to take. Call your system administrator or the next level of technical support for assistance, if necessary.

Clearing DEPROVSLOT

The condition type DEPROVSLOT occurs only on DACS III-2000 frames provisioned for dual power when one of slots 27 through 30 of the input or output module of an STS-1 unit is *not* equipped with a BUS EXT circuit pack.

Procedure 9-35. Clearing DEPROVSLOT

CAUTION:
Electrostatic discharge (ESD) damage.
ESD can cause damage to the components of a DACS III-2000 system.
Wear an ESD wrist strap when working around the frame.

The condition type DEPROVSLOT can occur in two instances. Use the appropriate procedure for your situation.

- The condition type DEPROVSLOT can occur when *all* of the statements that follow are true:
  - — BUS EXT circut packs are present in slots 27 through 30, of both the input and the output modules of an STS-1 unit, in a frame provisioned for dual power.
  - — One or more of the BUS EXT circuit packs is physically extracted.

  Clear the DEPROVSLOT condition by physically inserting each BUS EXT circuit pack that has been removed. If you need detailed instructions, see Procedure 3-1, "Installing Circuit Packs."
- The condition type DEPROVSLOT can also occur when *all* of the statements that follow are true:
  - — You are converting a DS3 bay provisioned for dual power to STS-1
  - — You attempted the `RST-EQPT` command on a unit controller of either the input or output module of the bay you are converting.
  - — At least one of slots 27 through 30 of either the input or the output module is not equipped with a BUS EXT circuit pack.

  Clear the DEPROVSLOT condition by replacing the non-BUS EXT packs, in slots 27 through 30 of both the input and the output module, with BUS EXT circuit packs. If you need detailed instructions, see Procedure 3-1, "Installing Circuit Packs."

Troubleclearing—Secondary Storage Subsystem

10

Contents

INT Condition Type on DISKA, DISKB, and SEC 10-1

Procedure 10-1.
Recovering from DISKA Failure when DISKB and SEC are In-Service 10-3

Procedure 10-2.
Recovering from DISKB Failure when DISKA and SEC are In-Service 10-7

Procedure 10-3.
Recovering from Failure of DISKA and DISKB when SEC is In-Service 10-13

Procedure 10-4.
Recovering from SEC Failure when DISKA and DISKB are In-Service 10-29

Procedure 10-5.
Recovering from SEC and DISKA Failure when DISKB is In-Service 10-34

Procedure 10-6.
Recovering from SEC and DISKB Failure when DISKA is In-Service 10-43

Troubleclearing—Secondary Storage Subsystem

10

INT Condition Type on DISKA, DISKB, and SEC

CAUTION:
Improper troubleclearing.
Use of the procedures in Chapter 10 before executing Procedure 9-1 will result in improper troubleclearing.
Execute Procedure 9-1 and come to this chapter ***only*** *if instructed to do so.*

Procedures are provided for

- recovering from DISKA failure when DISKB and SEC are in service
- recovering from DISKB failure when DISKA and SEC are in service
- recovering from DISKA and DISKB failure when SEC is in service
- recovering from SEC failure when DISKA and DISKB are in service
- recovering from SEC and DISKA failure when DISKB is in service
- recovering from SEC and DISKB failure when DISKA is in service

Table 10-1 assists you in locating the proper procedure to use depending on which disk and optical drives have failed and which remain in service.

Table 10-1. DISKA, DISKB, and SEC Failure Decision Tree

Failed Disk and Optical Drive(s)	and Disk and Optical Drive(s) In-Service	Procedure to Use
DISKA	DISKB SEC	Procedure 10-1
DISKB	DISKA SEC	Procedure 10-2
DISKA DISKB	SEC	Procedure 10-3
SEC	DISKA DISKB	Procedure 10-4
SEC DISKA	DISKB	Procedure 10-5
SEC DISKB	DISKA	Procedure 10-6

Procedure 10-1. Recovering from DISKA Failure when DISKB and SEC are In-Service

Use Procedure 10-1 if DISKA hard disk drive fails, but DISKB hard disk drive and the optical drive (SEC) are still in service.

CAUTION:
Service interruption.
Failure to follow the procedure in the exact order as written affects traffic on the frame. If you are not thoroughly familiar with the DACS III-2000 system and this procedure, read Procedure 10-1 completely before executing it. If you still are uncertain how to proceed, call your system administrator or the next level of technical support.

CAUTION:
Electrostatic discharge (ESD) damage.
ESD can cause damage to the components of a DACS III-2000 system. Wear an ESD wrist strap when working around the frame.

1. Verify the state of the main controller (MC) module, the DISKA and DISKB hard disk drives, and the optical drive (SEC) using the following steps:

   a. Verify the state of the main controller (MC) module by entering:

   ```
   RTRV-STATE-EQPT::MC;
   ```

   The system response should show that the main controller (MC) module is in the in-service (IS) state.

   - If the state of the main controller (MC) module is in-service (IS), continue with checking the state of the hard disk drive at Step 1b.
   - If the state of the main controller (MC) module is out-of-service fault (OOS-FLT), out-of-service maintenance (OOS-MTCE), or out-of-service maintenance condition (OOS-MCOND), call your system administrator or the next level of technical support.

   b. Verify the state of DISKA and DISKB hard disk drives and the optical drive (SEC) by entering:

   ```
   RTRV-STATE-EQPT::DISKA&DISKB&SEC;
   ```

   The system response should show that DISKA is in the out-of-service fault (OOS-FLT) state, DISKB is in the in-service active (IS-ACT) state, and SEC is in the in-service (IS) state.

   If *all* of the following are *true*, continue this procedure at Step 2:

   — DISKA is OOS-FLT *and* the red alarm LED on DISKA is lighted

— DISKB is IS-ACT

— SEC is IS

- If *any* of the items in the previous list are *false*, return to Table 10-1 to find the correct procedure or call your system administrator or the next level of technical support:
- If the state of DISKA is OOS-FLT and the red alarm LED is *not* lighted, call your system administrator or the next level of technical support.
- If the state of DISKA is not OOS-FLT, but DISKA is not functioning, call your system administrator or the next level of technical support.

2. Obtain a spare PRI3 circuit pack and label it "SPARE PRI3."
   - If a spare is available, continue this procedure at Step 3.
   - If a spare is not available, the system should be kept in service until a spare is located. Do *not* continue with this procedure.
3. Place the main controller (MC) module into the out-of-service maintenance condition (OOS-MCOND) state by entering:

   ED-STATE-EQPT::MC::OOS-MCOND;

   - If the system responds with the DENY message, call your system administrator or the next level of technical support.
   - If the system responds with the COMPLD message,

     ```
       <TID #n YY-MM-DD HH:MM:SS>
     M  ED-STATE-EQPT::MC::OOS-MCOND COMPLD
     ;
     ```

     a major alarm with the MAN condition type will be reported for the main controller (MC) module. Continue this procedure at Step 4.
4. Remove the PRI3 circuit pack and label it "WORKING PRI3" and add the frame identification and any other information required by your local practices. If you need detailed instructions, see Procedure 3-2, "Removing Circuit Packs."
5. Install the PRI3 circuit pack labeled "SPARE PRI3." If you need detailed instructions, see Procedure 3-1, "Installing Circuit Packs."
6. Restore the DISKA hard disk drive to service by entering:

   RST-EQPT::DISKA;

   The restore command automatically copies the contents of DISKB to DISKA. The LEDs on the drives light as the copying takes place.

- If the system responds with the COMPLD message, DISKA was restored to service and the DISKA alarm cleared. Continue this procedure at Step 7.
- If the system responds with the DENY message, DISKA was not restored. Call your system administrator or the next level of technical support.

7. Restore the main controller (MC) module to service by entering:

   RST-EQPT::MC;

   This step may take up to three minutes.

   - If the system responds with the COMPLD message, the main controller (MC) module was restored to service. Continue this procedure at Step 9.
   - If the system responds with the DENY message, the main controller (MC) module was not restored. Continue this procedure at Step 8.

8. Having received the DENY message in Step 7, reboot the system by simultaneously toggling the RESET ENABLE switch and pressing the RESET button.

   During the reset, you may see boot messages on any terminals connected to CILINK-1 or CILINK-2. On CILINK-1, these boot messages are output at 1200 baud. On CILINK-2, the baud rate depends on the type of enhanced communications interface (ECI) circuit pack installed in the frame. For an ECI2, the baud rate is 1200; for an ECI5 the baud rate is 2400.

   Reset completion time may be up to six minutes for a fully equipped (2048) system. Smaller systems should take less time.

   - If the system successfully reboots, you will see the following message:

     ```
     login:

        <TID#0 YY-MM-DD HH:MM:SS>
     A   001 REPT RST EQPT
         /* LOC:STATE */
         "MC:IS"
     ;

     login:
     ```

     With the system successfully rebooted, continue this procedure at Step 9.

- If the system does *not* reboot, meaning you do not receive the REPT RST EQPT message shown above or you do receive a boot message of either `BOOT FAIL` or `RESET STOPPED`, call your system administrator or the next level of technical support.

9. Update the labeling on the PRI3 circuit packs as follows:

   a. Relabel your spare PRI3 circuit pack that is now installed in the frame as "IN-SERVICE PRI3." Include the frame identification, date, and any other information required by your local practices.

   b. Relabel the PRI3 circuit pack that was removed from the frame in Step 4 as "DEFECTIVE." Return the circuit pack to the factory for repair. If you need detailed instructions, see Procedure 3-11, "Returning Circuit Packs for Repair."

Procedure 10-2. Recovering from DISKB Failure when DISKA and SEC are In-Service

Use Procedure 10-2 if the DISKB hard disk drive in the SEC3 circuit pack fails, but the DISKA hard disk drive and the optical drive (SEC) are still in service.

CAUTION:
Service interruption.
Failure to follow the procedure in the exact order as written affects traffic on the frame. If you are not thoroughly familiar with the DACS III-2000 system and this procedure, read Procedure 10-2 completely before executing it. If you still are uncertain how to proceed, call your system administrator or the next level of technical support.

CAUTION:
Electrostatic discharge (ESD) damage.
ESD can cause damage to the components of a DACS III-2000 system. Wear an ESD wrist strap when working around the frame.

1. Verify the state of the main controller (MC) module, the DISKA and DISKB hard disk drives, and the optical drive (SEC) using the following steps:

   a. Verify the state of the main controller (MC) module by entering:

   ```
   RTRV-STATE-EQPT::MC;
   ```

   The system response should be that the main controller (MC) module is in the in-service (IS) state.

   - If the state of the main controller (MC) module is IS, continue with checking the state of the hard disk drive at Step 1b.
   - If the state of the main controller (MC) module is out-of-service fault (OOS-FLT), out-of-service maintenance (OOS-MTCE), or out-of-service maintenance condition (OOS-MCOND), call your system administrator or the next level of technical support.

   b. Verify the state of DISKA and DISKB hard disk drives and the optical drive (SEC) by entering:

   ```
   RTRV-STATE-EQPT::DISKA&DISKB&SEC;
   ```

   The system response should show that DISKA is in the in-service active (IS-ACT) state, DISKB is in the out-of-service fault (OOS-FLT) state, and SEC is in the in-service (IS) state.

- If *all* of the following are *true*, continue this procedure at Step 2:
  - — DISKA is IS-ACT
  - — DISKB is OOS-FLT *and* the red alarm LED is lighted
  - — SEC is IS
- If *any* of the items in the previous list are *false*, return to Table 10-1 for the correct procedure or call your system administrator or the next level of technical support.
- If the state of DISKB is OOS-FLT and the red alarm LED is *not* lighted, call your system administrator or next level of technical support.
- If the state of DISKB is not OOS-FLT, but DISKB is not functioning, call your system administrator or the next level of technical support.

2. Retrieve automatic backup information by entering:

   RTRV-BKUPSCHED-MEM;

   The system responds with the following message:

```
  <TID #n YY-MM-DD HH:MM:SS>
M  RTRV BKUPSCHED MEM::::PRI,,SEC COMPLD
   /* :FROMMEM,,TOMEM:MEMCLASS:INVL,BKUPDAT,BKUPTM: */
   ":PRI,,SEC:BOTH:,,:"
;
```

3. Check the date (BKUPDAT) and time (BKUPTM) parameters to see if any backups are scheduled for the next half hour. If BKUPDAT or BKUPTM values do not appear in the message, no backups are scheduled.
   - If no backups are scheduled for the next half hour, continue this procedure at Step 4.
   - If backups are scheduled for the next half hour, get permission from your system administrator to cancel the scheduled backup (using the SCHED-BKUP-MEM command). When you know the system is ready, continue this procedure at Step 4.
4. Check for any pending commands by entering:

   RTRV-CMD-STAT::::ALL;

   The system responds with the following message:

```
  <TID #n YY-MM-DD HH:MM:SS>
M  RTRV CMD STAT::::ALL COMPLD
   /* CMDCTAG, INPUT CMD, CMDSTAT */
   " <CMDCTAG, INPUT CMD, CMDSTAT> "
;
```

   where

INPUT CMD = the commands that are pending execution

CMDSTAT = the status of the pending command. IP means the command is in-progress; WRTSCE means the command is waiting for resources

- If you do *not* find any pending commands, continue this procedure at Step 5.
- If you find any pending commands, wait a minute or two, reenter RTRV-CMD-STAT until you receive the message that no commands are executing or waiting for execution, then continue this procedure at Step 5.

  The system response will look like the following message:

```
  <TID #n YY-MM-DD HH:MM:SS>
M  RTRV CMD STAT::::ALL COMPLD
  ;
```

5. Check for an optical cartridge in the optical drive (SEC), and if one is present, remove it by performing the following steps:

   a. Look at the LED on the optical drive (SEC).

      - If you find the LED is *not* lighted or flashing, continue this procedure at Step 5b.
      - If you find the LED is lighted or flashing, wait until the LED goes out, then continue this procedure at Step 5b.

   b. Press the eject button on the optical drive and continue this procedure at Step 6.

      If the optical cartridge does not eject, or you need detailed instructions for removing an optical cartridge, see Procedure 3-8, "Removing Optical Cartridges."

6. Obtain a spare SEC3 circuit pack and label it "SPARE SEC3."

   - If a spare is available, continue this procedure at Step 7.
   - If a spare is not available, the system should be kept in service until a spare is located. Do *not* continue with this procedure.

7. Place the main controller (MC) module into the out-of-service maintenance condition (OOS-MCOND) state by entering:

```
ED-STATE-EQPT::MC::OOS-MCOND;
```

   - If the system responds with the DENY message, call your system administrator or the next level of technical support.

- If the system responds with the COMPLD message,

```
  <TID #n YY-MM-DD HH:MM:SS>
M  ED-STATE-EQPT::MC::OOS-MCOND COMPLD
;
```

  a major alarm with the MAN condition type for the main controller (MC) module will be reported. Continue this procedure at Step 8.

8. Put the optical drive (SEC) into the out-of-service fault (OOS-FLT) state by entering:

   RMV-EQPT::SEC;

   Regardless of whether you receive the COMPLD or DENY message, continue this procedure at Step 9.

9. Remove the SEC3 circuit pack and label it with "WORKING SEC3," the frame identification, and any other information required by your local practices. If you need detailed instructions, see Procedure 3-2, "Removing Circuit Packs."

10. Install the spare SEC3 circuit pack. If you need detailed instructions, see Procedure 3-1, "Installing Circuit Packs."

11. Look for the autonomous message that indicates the optical drive (SEC) autorestored:

```
  <TID #n YY-MM-DD HH:MM:SS>
A <ASEQ> REPT RST EQPT
   /* LOC:STATE */
   "SEC:IS"
;
```

    - If SEC restored automatically, continue this procedure at Step 12.
    - If SEC did not autorestore, wait at least 30 seconds, then restore it manually by entering:

      RST-EQPT::SEC;

      — If the system responds with the COMPLD message, continue this procedure at Step 12. If no optical cartridge was present in SEC, the system generates a REPT EXCPTN SYS message.

      — If the system responds with the DENY message, call your system administrator or the next level of technical support.

12. If an optical cartridge was found in Step 5,wait at least 30 seconds, then reinsert it into the optical drive (SEC).

13. Restore the DISKB hard disk drive to service by entering:

    RST-EQPT::DISKB;

The restore command automatically copies the contents of DISKA to DISKB.

- If the system responds with the COMPLD message, DISKB was restored to service and the minor alarm cleared. Continue this procedure at Step 14.
- If the system responds with the DENY message, DISKB was not restored. Call your system administrator or the next level of technical support.

14. Restore the main controller (MC) module to service by entering:

    RST-EQPT::MC;

    This step may take up to three minutes.

    - If the system responds with the COMPLD message, the main controller (MC) module was restored to service. Continue this procedure at Step 16.
    - If the system responds with the DENY message, the main controller (MC) module was not restored. Continue this procedure at Step 15.

15. Having received the DENY message in Step 14, reboot the system by simultaneously toggling the RESET ENABLE switch and pressing the RESET button.

    During the reset, you may see boot messages on any terminals connected to CILINK-1 or CILINK-2. On CILINK-1, these boot messages are output at 1200 baud. On CILINK-2, the baud rate depends on the type of enhanced communications interface (ECI) circuit pack installed in the frame. For an ECI2, the baud rate is 1200; for an ECI5, 2400.

    Reset completion time may be up to six minutes for a fully equipped 2048-size system. Smaller systems should take less time.

    - If the system successfully reboots, you will see the following message:

      ```
      login:

         <TID#0 YY-MM-DD HH:MM:SS>
      A   001 REPT RST EQPT
          /* LOC:STATE */
          "MC:IS"
      ;

      login:
      ```

      With the system successfully rebooted, continue this procedure at Step 16.

- If the system does *not* reboot, meaning you do not receive the `REPT RST EQPT` message shown above or you do receive a boot message of either `BOOT FAIL` or `RESET STOPPED`, call your system administrator or the next level of technical support.

16. Update the labeling on the SEC3 circuit packs as follows:

    a. Relabel your spare SEC3 circuit pack that is now installed in the frame as "IN-SERVICE SEC3." Include the frame identification, date, and any other information required by your local practices.

    b. Relabel the SEC3 circuit pack that was removed from the frame in Step 9 as "DEFECTIVE." Return the circuit pack to the factory for repair. If you need detailed instructions, see Procedure 3-11, "Returning Circuit Packs for Repair."

Procedure 10-3. Recovering from Failure of DISKA and DISKB when SEC is In-Service

Use Procedure 10-3 if both DISKA and DISKB hard disk drives fail, but SEC is still in service.

CAUTION:
Service interruption.
Failure to follow the procedure in the exact order as written affects traffic on the frame. If you are not thoroughly familiar with the DACS III-2000 system and this procedure, read Procedure 10-3 completely before executing it. If you still are uncertain how to proceed, call your system administrator or the next level of technical support.

CAUTION:
Electrostatic discharge (ESD) damage.
ESD can cause damage to the components of a DACS III-2000 system. Wear an ESD wrist strap when working around the frame.

1. Verify the state of the main controller (MC) module, the DISKA and DISKB hard disk drives, and the optical drive (SEC) using the following steps:

   a. Verify the state of the main controller (MC) module by entering:

   ```
   RTRV-STATE-EQPT::MC;
   ```

   The system response should show that the main controller (MC) module is in the out-of-service maintenance condition (OOS-MCOND) state.

   - If the state of the main controller (MC) module is OOS-MCOND, continue with checking the states of the disk drives at Step 1b.
   - If the state of the main controller (MC) module is out-of-service fault (OOS-FLT), in-service (IS), or out-of-service maintenance (OOS-MTCE), call your system administrator or the next level of technical support.

   b. Verify the state of the DISKA and DISKB hard disk drives and the optical drive (SEC) by entering:

   ```
   RTRV-STATE-EQPT::DISKA&DISKB&SEC;
   ```

   The system response should show that DISKA and DISKB are in the out-of-service fault (OOS-FLT) state and SEC is in the in-service (IS) state.

   - If *all* of the following are *true*, continue this procedure at Step 2:
     - — DISKA is OOS-FLT and the red alarm LED is lighted
     - — DISKB is OOS-FLT and the red alarm LED is lighted

— SEC is IS

- If *any* of the items in the previous list are *false*, return to Table 10-1 to find the correct procedure or call your system administrator or the next level of technical support:
- If the state of either DISKA or DISKB is not out-of-service fault (OOS-FLT), but that DISK is not functioning, call your system administrator or the next level of technical support.

2. Obtain a system backup optical cartridge that contains the system program and most current backups of the database and alternate maps, if used.

CAUTION:
Loss of service.
If service has been rerouted since the backup cartridge was made, you may experience loss of service when using that cartridge.
Before restoring a database, make sure you have the correct backup cartridge by checking the DATE and TIME fields in a RTRV-SYSID message and also checking office records for database changes that may have occurred since the backup cartridge was made.

- If the correct backup optical cartridge is available, continue this procedure at Step 3.
- If the correct backup optical cartridge is *not* available, call your system administrator or the next level of technical support.

3. Obtain spare PRI3 and SEC3 circuit packs and label them "SPARE PRI3" and "SPARE SEC3" respectively.
   - If you have spares for both PRI3 and SEC3 circuit packs, continue this procedure at Step 4.
   - If you have only a spare PRI3 circuit pack, continue this procedure at Step 5.
   - If you have only a spare SEC3 circuit pack, continue this procedure at Step 6.
4. Having spares for both the PRI3 and SEC3 circuit packs, perform the following steps:
   a. Remove the PRI3 circuit pack, label it "WORKING PRI3," and add the frame identification and any other information required by your local practices. If you need detailed instructions, see Procedure 3-2, "Removing Circuit Packs."
   b. Install the PRI3 circuit pack labeled "SPARE PRI3." If you need detailed instructions, see Procedure 3-1, "Installing Circuit Packs."
   c. Place the DISKA hard disk drive in the out-of-service maintenance condition (OOS-MCOND) by entering:

```
ED-STATE-EQPT::DISKA::OOS-MCOND;
```

- If the system responds with the DENY message, call your system administrator or the next level of technical support.
- If the system responds with the COMPLD message, continue this procedure at Step 4d.

d. Insert the optical cartridge that contains the software release and system backups into the optical drive (SEC). If you need detailed instructions, see Procedure 3-7, "Inserting Optical Cartridges."

e. Wait at least 30 seconds, then verity that you used the correct optical cartridge by entering:

```
RTRV-SYSID;
```

The message from the RTRV-SYSID command will resemble the example that follows:

```
   <TID#n YY-MM-DD HH:MM:SS>
M  RTRV SYSID::: COMPLD
   /* MEMORY_TYPE,SIGNATURE,SYSTEM_TYPE,SYSTEM_RELEASE,
         TID,STAT,DATE,TIME */
   "SYS,PROG,DACS III-2000(2048),Release 4,,,,"
   "PRI,PROG,UNKNOWN,UNKNOWN,,,,"
   "SEC,PROG,DACS III-2000(2048),Release 4,,,,"
   "WKG,DBASE,DACS III-2000(2048),Release 4,TID,
         PRESENT,YYMMDD,HHMMSS
   "PRI,DBASE,UNKNOWN,UNKNOWN,UNKNOWN,UNKNOWN,UNKNOWN,
         UNKNOWN"
   "SEC,DBASE,DACS III-2000(2048),Release 4,TID,
         PRESENT,YYMMDD,HHMMSS
   "PRI,MAPS,DACS III-2000(2048),Release 4,TID,,
         YYMMDD,HHMMSS"
   "SEC,MAPS,DACS III-2000(2048),Release 4,TID,,
         YYMMDD,HHMMSS"
;
```

f. Verify the following pieces of information in the RTRV-SYSID output:

— Verify that the SYS,PROG and SEC,PROG lines contain identical information.

— Verify that the DATE and TIME fields on the SEC,DBASE line match the DATE and TIME fields on the WKG,DBASE line.

— If alternate maps are used, verify that the DATE and TIME fields on the PRI,MAPS and SEC,MAPS lines match.

Do one of the following:

- If you have the correct release and the latest backup, continue this procedure at Step 4g.

- If it is not the release you want, or you do not have the most current backup, remove the optical cartridge. Find the correct one with the most recent backup and repeat this procedure beginning at Step 4d.

CAUTION:
Possible loss of service.
If the SYSTEM TYPE is incorrect, you may experience a loss of service. Visually check the system to verify that the SYSTEM TYPE matches it and check that the SYSTEM RELEASE is correct.

g. Copy the program from the backup optical cartridge (SEC) to PRIMARY by entering:

```
CPY-MEM:::SEC,PRI,PROG;
```

The LEDs on the drives light as the copying takes place.

- If the system responds with the COMPLD message, the program was copied from SEC to PRIMARY. Continue this procedure at Step 4h.
- If the system responds with the DENY message, the program was not copied. Call your system administrator or the next level of technical support.

h. Copy the database from the backup optical cartridge (SEC) to PRIMARY by entering:

```
CPY-MEM:::SEC,PRI,DBASE;
```

CAUTION:
Loss of traffic.
Using the incorrect backup database when restoring the system can lead to loss of traffic. Use only the most recent database backup for this frame.

The LEDs on the drives light as the copying takes place.

- If the system responds with the COMPLD message, the database was copied from SEC to PRIMARY.
  - — If you use alternate maps, continue this procedure at Step 4i.
  - — If you do *not* use alternate maps, continue this procedure at Step 4j.
- If the system responds with the DENY message, the database was not copied. Call your system administrator or the next level of technical support.

i. If you use alternate maps, copy the alternate maps from SEC to PRIMARY by entering:

```
CPY-MEM:::SEC,PRI,MAPS;
```

The LEDs on the drives light as the copying takes place.

- If the system responds with the COMPLD message, the alternate maps were copied from SEC to PRIMARY. Continue this procedure at Step 4j.
- If the system responds with the DENY message, the alternate maps were not copied. Call your system administrator or the next level of technical support.

j. Restore the DISKA hard disk drive to service by entering:

```
RST-EQPT::DISKA;
```

- If the system responds with the COMPLD message, DISKA was restored to service and the alarm cleared. Continue this procedure at Step 4k.
- If the system responds with the DENY message, DISKA was not restored. Call your system administrator or the next level of technical support.

k. Remove the optical cartridge from the optical drive (SEC). If you need detailed instructions, see Procedure 3-8, "Removing Optical Cartridges."

l. Remove the SEC3 circuit pack and label it "WORKING SEC3." Add the frame identification and any other information required by your local practices. If you need detailed instructions, see Procedure 3-2, "Removing Circuit Packs."

m. Install the SEC3 circuit pack labeled "SPARE SEC3." If you need detailed instructions, see Procedure 3-1, "Installing Circuit Packs."

n. Look for the autonomous message that indicates the optical drive (SEC) autorestored:

```
   <TID #n YY-MM-DD HH:MM:SS>
A  <ASEQ> REPT RST EQPT
   /* LOC:STATE */
   "SEC:IS"
;
```

- If SEC restored automatically, continue this procedure at Step 4o.
- If SEC did not autorestore, wait at least 30 seconds, and then restore it manually by entering:

```
RST-EQPT::SEC;
```

— If the system responds with the COMPLD message, continue this procedure at Step 4o. If no optical cartridge was present in SEC, the system generates a REPT EXCPTN SYS message.

— If the system responds with the DENY message, call your system administrator or the next level of technical support.

o. Restore DISKB to service by entering:

```
RST-EQPT::DISKB;
```

This command copies the contents of DISKA to DISKB.

- If the system responds with the COMPLD message, DISKB was restored to service and the DISKB alarm cleared. Continue this procedure at Step 4p.
- If the system responds with the DENY message, DISKB was not restored to service. Call your system administrator or the next level of technical support.

p. Restore the main controller (MC) module to service by entering:

```
RST-EQPT::MC::PRI;
```

PRI must be specified in this command because in copying the database from SEC to PRI, the database contained in working memory (WKG) was invalidated. This step may take up to three minutes.

- If the system responds with the COMPLD message, the main controller (MC) module was restored to service and the alarm for the main controller (MC) module cleared. Continue this procedure at Step 4r.
- If the system responds with the DENY message, the main controller (MC) module was not restored. Continue this procedure at Step 4q.

q. Having received the DENY message in Step 4p, reboot the system by simultaneously toggling the RESET ENABLE switch and pressing the RESET button.

During the reset, you may see boot messages on any terminals connected to CILINK-1 or CILINK-2. On CILINK-1, these boot messages are output at 1200 baud. On CILINK-2, the baud rate depends on the type of enhanced communications interface (ECI) circuit pack installed in the frame. For an ECI2, the baud rate is 1200; for an ECI5 the baud rate is 2400.

Reset completion time may be up to six minutes for a fully equipped 2048-size system. Smaller systems should take less time.

- If the system successfully reboots, you will see the following message:

```
login:
  <TID#0 YY-MM-DD HH:MM:SS>
A  001 REPT RST EQPT
   /* LOC:STATE */
   "MC:IS"
;
login:
```

With the system successfully rebooted, continue this procedure at Step 4r.

- If the system does *not* reboot, meaning you do not receive the `REPT RST EQPT` message shown above or you do receive a boot message of either `BOOT FAIL` or `RESET STOPPED`, call your system administrator or the next level of technical support.

r. Update the labeling on the PRI3 and SEC3 circuit packs as follows:

r-1 Relabel your spare PRI3 circuit pack that is now installed in the frame as "IN-SERVICE PRI3." Include the frame identification, date, and any other information required by your local practices.

r-2 Relabel the PRI3 circuit pack that was removed from the frame in Step 4a as "DEFECTIVE." Return the circuit pack to the factory for repair. If you need detailed instructions, see Procedure 3-11, "Returning Circuit Packs for Repair."

r-3 Relabel your spare SEC3 circuit pack that is now installed in the frame as "IN-SERVICE SEC3." Include the frame identification, date, and any other information required by your local practices.

r-4 Relabel the SEC3 circuit pack that was removed from the frame in Step 4e as "DEFECTIVE." Return the circuit pack to the factory for repair. If you need detailed instructions, see Procedure 3-11, "Returning Circuit Packs for Repair." You have completed this procedure.

5. Having only a spare PRI3 circuit pack, perform the following steps:

a. Do *not* remove the SEC3 circuit pack from the main controller module.

b. Remove the PRI3 circuit pack and label it "WORKING PRI3." Add the frame identification and any other information required by your local practices. If you need detailed instructions, see Procedure 3-2, "Removing Circuit Packs."

c. Install the PRI3 circuit pack labeled "SPARE PRI3." If you need detailed instructions, see Procedure 3-1, "Installing Circuit Packs."

d. Place DISKA into the out-of-service maintenance condition (OOS-MCOND) state by entering:

ED-STATE-EQPT::DISKA::OOS-MCOND;

- If the system responds with the DENY message, call your system administrator or the next level of technical support.
- If the system responds with the COMPLD message, continue this procedure at Step 5f:

```
   <TID #n YY-MM-DD HH:MM:SS>
M  ED-STATE-EQPT::DISKA:: COMPLD
;
```

e. Insert the optical cartridge that contains the software release and system backups into the optical drive (SEC). If you need detailed instructions, see Procedure 3-7, "Inserting Optical Cartridges."

f. Wait at least 30 seconds, then verify that you used the correct optical cartridge by entering:

RTRV-SYSID;

The message from the RTRV-SYSID command will resemble the example that follows:

```
  <TID#n YY-MM-DD HH:MM:SS>
M RTRV SYSID::: COMPLD
   /* MEMORY_TYPE,SIGNATURE,SYSTEM_TYPE,SYSTEM_RELEASE,
         TID,STAT,DATE,TIME */
   "SYS,PROG,DACS III-2000(2048),Release 4,,,,"
   "PRI,PROG,UNKNOWN,UNKNOWN,,,,"
   "SEC,PROG,DACS III-2000(2048),Release 4,,,,"
   "WKG,DBASE,DACS III-2000(2048),Release 4,TID,
         PRESENT,YYMMDD,HHMMSS
   "PRI,DBASE,UNKNOWN,UNKNOWN,UNKNOWN,UNKNOWN,UNKNOWN,
         UNKNOWN"
   "SEC,DBASE,DACS III-2000(2048),Release 4,TID,
         PRESENT,YYMMDD,HHMMSS
   "PRI,MAPS,DACS III-2000(2048),Release 4,TID,,
         YYMMDD,HHMMSS"
   SEC,MAPS,DACS III-2000(2048),Release 4,TID,,
         YYMMDD,HHMMSS"
;
```

g. Verify the following pieces of information in the RTRV-SYSID output:

— Verify that the SYS,PROG and SEC,PROG lines contain identical information.

— Verify that the DATE and TIME fields on the SEC,DBASE line match the DATE and TIME fields on the WKG,DBASE line.

— If alternate maps are used, verify that the DATE and TIME fields on the PRI,MAPS and SEC,MAPS lines match.

- If you have the correct release and the latest backup, continue this procedure at Step 5h.
- If it is not the release you want or you do not have the most current backup, remove the optical cartridge and find the correct one with the most recent backup and repeat this procedure beginning at Step 5e.

h. Copy the program from the backup optical cartridge (SEC) to PRIMARY by entering:

```
CPY-MEM:::SEC,PRI,PROG;
```

The LEDs on the drives light as the copying takes place.

- If the system responds with the COMPLD message, the program was copied from SEC to PRIMARY. Continue this procedure at Step 5i.
- If the system responds with the DENY message, the program was not copied. Call your system administrator or the next level of technical support.

i. Copy the database from the backup optical cartridge (SEC) to PRIMARY by entering:

```
CPY-MEM:::SEC,PRI,DBASE;
```

CAUTION:
Loss of traffic.
Using the incorrect backup database when restoring the system can lead to loss of traffic. Use only the most recent database backup for this frame.

The LEDs on the drives light as the copying takes place.

- If the system responds with the COMPLD message, the database was copied from SEC to PRIMARY.
  — If you use alternate maps, continue this procedure at Step 5j.
  — If you do *not* use alternate maps, continue this procedure at Step 5k.
- If the system responds with the DENY message, the database was not copied. Call your system administrator or the next level of technical support.

j. If you use alternate maps, copy the alternate maps from SEC to PRIMARY by entering:

```
CPY-MEM:::SEC,PRI,MAPS;
```

The LEDs on the drives light as the copying takes place.

- If the system responds with the COMPLD message, the alternate maps were copied from SEC to PRIMARY. Continue this procedure at Step 5k.
- If the system responds with the DENY message, the alternate maps were not copied. Call your system administrator or the next level of technical support.

k. Restore the DISKA hard disk drive to service by entering:

```
RST-EQPT::DISKA;
```

If the system responds with the COMPLD message, DISKA was restored to service and the DISKA alarm cleared. Continue this procedure at Step 5l.

- If the system responds with the DENY message, DISKA was not restored. Call your system administrator or the next level of technical support.

l. Restore the main controller (MC) module to service by entering:

```
RST-EQPT::MC::PRI;
```

PRI must be specified in this command because in copying the database from SEC to PRI, the database contained in working memory (WKG) was invalidated. This step may take up to three minutes.

- If the system responds with the COMPLD message, the main controller (MC) module was restored to service, but there is still a minor alarm for DISKB. Continue this procedure at Step 5n.
- If the system responds with the DENY message, the main controller (MC) module was not restored. Continue this procedure at Step 5m.

m. Having received the DENY message in Step 5l, reboot the system by simultaneously toggling the RESET ENABLE switch and pressing the RESET button.

During the reset, you may see boot messages on any terminals connected to CILINK-1 or CILINK-2. On CILINK-1, these boot messages are output at 1200 baud. On CILINK-2, the baud rate depends on the type of enhanced communications interface (ECI) circuit pack installed in the frame. For an ECI2, the baud rate is 1200; for an ECI5 the baud rate is 2400.

Reset completion time may be up to six minutes for a fully equipped 2048-size system. Smaller systems should take less time.

- If the system successfully reboots, you will see the following message:

```
login:

   <TID#0 YY-MM-DD HH:MM:SS>
A   001 REPT RST EQPT
    /* LOC:STATE */
    "MC:IS"
;

login:
```

  Even with the system successfully rebooted, there is still a minor alarm on DISKB. Continue this procedure at Step 5n.

- If the system does *not* reboot, meaning you do not receive the REPT RST EQPT message shown above or you do receive a boot message of either `BOOT FAIL` or `RESET STOPPED`, call your system administrator or the next level of technical support.

n. Update the labeling on the PRI3 and SEC3 circuit packs as follows:

n-1 Relabel your spare PRI3 circuit pack that is now installed in the frame as "IN-SERVICE PRI3." Include the frame identification, date, and any other information required by your local practices.

n-2 Relabel the PRI3 circuit pack that was removed from the frame in Step 5b as "DEFECTIVE." Return the circuit pack to the factory for repair. If you need detailed instructions, see Procedure 3-11, "Returning Circuit Packs for Repair."

n-3 Label your in-service SEC3 circuit pack with a note about the defective DISKB hard drive.

n-4 Obtain a replacement SEC3 circuit pack. When it arrives, use Procedure 10-2, "Recovering from DISKB Failure when DISKA and SEC are In-Service" to replace the SEC3 circuit pack. You have completed this procedure.

6. Having only a spare SEC3 circuit pack, perform the following steps:

a. Do *not* remove the PRI3 circuit pack from the main controller module.

b. Remove the SEC3 circuit pack and label it "WORKING SEC3." Add the frame identification and any other information required by your local practices. If you need detailed instructions, see Procedure 3-2, "Removing Circuit Packs."

c. Install the SEC3 circuit pack labeled "SPARE SEC3." If you need detailed instructions, see Procedure 3-1, "Installing Circuit Packs."

d. Look for the autonomous message that indicates the optical drive (SEC) autorestored:

```
  <TID #n YY-MM-DD HH:MM:SS>
A <ASEQ> REPT RST EQPT
  /* LOC:STATE */
  "SEC:IS"
;
```

- If SEC restored automatically, continue this procedure at Step 6e.
- If SEC did not autorestore, wait at least 30 seconds, then restore it manually by entering:

  RST-EQPT::SEC;

  — If the system responds with the COMPLD message, continue this procedure at Step 6e. If no optical cartridge was present in SEC, the system generates a REPT EXCPTN SYS message.

  — If the system responds with the DENY message, call your system administrator or the next level of technical support.

e. Wait at least 30 seconds, then insert the optical cartridge that contains the software release and system backups into the optical drive (SEC). If you need detailed instructions, see Procedure 3-7, "Inserting Optical Cartridges."

f. Place DISKB into the out-of-service maintenance condition (OOS-MCOND) state by entering:

ED-STATE-EQPT::DISKB::OOS-MCOND;

- If the system responds with the DENY message, call your system administrator or the next level of technical support.

```
  <TID #n YY-MM-DD HH:MM:SS>
M  ED-STATE-EQPT::DISKB:: DENY
   SNIS
;
```

- If the system responds with the COMPLD message, continue this procedure at Step 6g.

```
  <TID #n YY-MM-DD HH:MM:SS>
M  ED-STATE-EQPT::DISKB:: COMPLD
;
```

g. Wait at least 30 seconds, then verify that you used the correct optical cartridge by entering:

RTRV-SYSID;

The message from the RTRV-SYSID command will resemble the example that follows:

```
  <TID#n YY-MM-DD HH:MM:SS>
M  RTRV SYSID::: COMPLD
   /* MEMORY_TYPE,SIGNATURE,SYSTEM_TYPE,SYSTEM_RELEASE,
         TID,STAT,DATE,TIME */
   "SYS,PROG,DACS III-2000(2048),Release 4,,,,"
   "PRI,PROG,UNKNOWN,UNKNOWN,,,,"
   "SEC,PROG,DACS III-2000(2048),Release 4,,,,"
   "WKG,DBASE,DACS III-2000(2048),Release 4,TID,
         PRESENT,YYMMDD,HHMMSS
   "PRI,DBASE,UNKNOWN,UNKNOWN,UNKNOWN,UNKNOWN,UNKNOWN,
         UNKNOWN"
   "SEC,DBASE,DACS III-2000(2048),Release 4,TID,
         PRESENT,YYMMDD,HHMMSS
   "PRI,MAPS,DACS III-2000(2048),Release 4,TID,,
            YYMMDD,HHMMSS"
   "SEC,MAPS,DACS III-2000(2048),Release 4,TID,,
            YYMMDD,HHMMSS"
;
```

h. Verify the following pieces of information in the RTRV-SYSID output:

— Verify that the `SYS,PROG` and `SEC,PROG` lines contain identical information.

— Verify that the `DATE` and `TIME` fields on the `SEC,DBASE` line match the `DATE` and `TIME` fields on the `WKG,DBASE` line.

— If alternate maps are used, verify that the `DATE` and `TIME` fields on the `PRI,MAPS` and `SEC,MAPS` lines match.

Do one of the following:

- If you have the correct release and the latest backup, continue this procedure at Step 6i.
- If it is not the release you wan,t or you do not have the most current backup, remove the optical cartridge. Find the correct one with the most recent backup. and repeat this procedure beginning at Step 6e.

i. Copy the program from the backup optical cartridge (SEC) to PRIMARY by entering:

```
CPY-MEM:::SEC,PRI,PROG;
```

The LEDs on the drives light as the copying takes place.

- If the system responds with the `COMPLD` message, the program was copied from SEC to PRIMARY. Continue this procedure at Step 6j.

- If the system responds with the DENY message, the program was not copied. Call your system administrator or the next level of technical support.

j. Copy the database from the backup optical cartridge (SEC) to PRIMARY by entering:

```
CPY-MEM:::SEC,PRI,DBASE;
```

CAUTION:
Loss of traffic.
Using the incorrect backup database when restoring the system can lead to loss of traffic. Use only the most recent database backup for this frame.

The LEDs on the drives light as the copying takes place.

- If the system responds with the COMPLD message, the database was copied from SEC to PRIMARY.
  - — If you use alternate maps, continue this procedure at Step 6k.
  - — If you do *not* use alternate maps, continue this procedure at Step 6l.
- If the system responds with the DENY message, the database was not copied. Call your system administrator or the next level of technical support.

k. If you use alternate maps, copy the alternate maps from SEC to PRIMARY by entering:

```
CPY-MEM:::SEC,PRI,MAPS;
```

The LEDs on the drives light as the copying takes place.

- If the system responds with the COMPLD message, the alternate maps were copied from SEC to PRIMARY. Continue this procedure at Step 6l.
- If the system responds with the DENY message, the alternate maps were not copied. Call your system administrator or the next level of technical support.

l. Restore the DISKB hard disk drive to service by entering:

```
RST-EQPT::DISKB;
```

- If the system responds with the COMPLD message, DISKB was restored to service and the DISKB alarm cleared. Continue this procedure at Step 6m.
- If the system responds with the DENY message, DISKA was not restored. Call your system administrator or the next level of technical support.

m. Restore the main controller (MC) module to service by entering:

m. Restore the main controller (MC) module to service by entering:

RST-EQPT::MC::PRI;

PRI must be specified in this command because in copying the database from SEC to PRI, the database contained in working memory (WKG) was invalidated.

This step may take up to three minutes.

- If the system responds with the COMPLD message, the main controller (MC) module was restored to service, but there is still a minor alarm for DISKA. Continue this procedure at Step 6o.
- If the system responds with the DENY message, the main controller (MC) module was not restored. Continue this procedure at Step 6n.

n. Having received the DENY message in Step 6m, reboot the system by simultaneously toggling the RESET ENABLE switch and pressing the RESET button.

During the reset, you may see boot messages on any terminals connected to CILINK-1 or CILINK-2. On CILINK-1, these boot messages are output at 1200 baud. On CILINK-2, the baud rate depends on the type of enhanced communications interface (ECI) circuit pack installed in the frame. For an ECI2, the baud rate is 1200; for an ECI5 the baud rate is 2400.

Reset completion time may be up to six minutes for a fully equipped 2048-size system. Smaller systems should take less time.

- If the system successfully reboots, you will see the following message:

```
login:

    <TID#0 YY-MM-DD HH:MM:SS>
A    001 REPT RST EQPT
     /* LOC:STATE */
     "MC:IS"
;

login:
```

  Even with the system successfully rebooted, there is still a minor alarm for DISKA. Continue this procedure at Step 6o.

- If the system does *not* reboot, meaning you do not receive the REPT RST EQPT message shown above or you do receive a boot message of either BOOT FAIL or RESET STOPPED, call your system administrator or the next level of technical support.

o. Update the labeling on the PRI3 and SEC3 circuit packs as follows:

o-1 Relabel the PRI3 circuit pack in the frame as "DEFECTIVE."

o-2 Obtain a replacement PRI3 circuit pack. When it arrives, use Procedure 10-1, "Recovering from DISKA Failure when DISKB and SEC are In-Service" to replace the PRI3 circuit pack.

o-3 Relabel your spare SEC3 circuit pack that is now installed in the frame as "IN-SERVICE SEC3." Include the frame identification, date, and any other information required by your local practices.

o-4 Relabel the SEC3 circuit pack that was removed from the frame in Step 6b as "DEFECTIVE." Return the circuit pack to the factory for repair. If you need detailed instructions, see Procedure 3-11, "Returning Circuit Packs for Repair."

Procedure 10-4. Recovering from SEC Failure when DISKA and DISKB are In-Service

Use Procedure 10-4 if the optical drive (SEC) fails, but the DISKA and DISKB hard disk drives are still in-service.

CAUTION:
Service interruption.
Failure to follow the procedure in the exact order as written affects traffic on the frame. If you are not thoroughly familiar with the DACS III-2000 system and this procedure, read Procedure 10-4 completely before executing it. If you still are uncertain how to proceed, call your system administrator or the next level of technical support.

CAUTION:
Electrostatic discharge (ESD) damage.
ESD can cause damage to the components of a DACS III-2000 system. Wear an ESD wrist strap when working around the frame.

1. Verify the state of the main controller (MC) module, the DISKA and DISKB hard disk drives, and the optical drive (SEC) using the following steps:

   a. Verify the state of the main controller (MC) module by entering:

   ```
   RTRV-STATE-EQPT::MC;
   ```

   The system response should show that the main controller (MC) module is in the in-service (IS) state.

   - If the state of the main controller (MC) module is IS, continue this procedure at Step 1b.
   - If the state of the main controller (MC) module is out-of-service fault (OOS-FLT), out-of-service maintenance (OOS-MTCE), or out-of-service maintenance condition (OOS-MCOND), call your system administrator or the next level of technical support.

   b. Verify the state of the DISKA and DISKB hard disk drives and the optical drive (SEC) by entering:

   ```
   RTRV-STATE-EQPT::DISKA&DISKB&SEC;
   ```

   The system response should show that DISKA is in the in-service active (IS-ACT) state, DISKB is in the in-service standby (IS-STBY) state, and SEC is in the out-of-service fault (OOS-FLT) state.

- If *all* of the following are *true*, continue this procedure at Step 2:
  - — DISKA is `IS-ACT`
  - — DISKB is `IS-STBY`
  - — SEC is `OOS-FLT` and the red alarm LED on SEC is lighted
- If *any* of the items in the previous list are *false*, return to Table 10-1 to find the correct procedure or call your system administrator or the next level of technical support.
- If the state of SEC is not `OOS-FLT`, but SEC is not functioning, call your system administrator or the next level of technical support.

2. Retrieve automatic backup information by entering:

   `RTRV-BKUPSCHED-MEM;`

   The system responds with the following message:

```
  <TID #n YY-MM-DD HH:MM:SS>
M  RTRV BKUPSCHED MEM::::PRI,,SEC COMPLD
   /* :FROMMEM,,TOMEM:MEMCLASS:INVL,BKUPDAT,BKUPTM:
   */ ":PRI,,SEC:BOTH:,,:"
;
```

3. Check the date (`BKUPDAT`) and time (`BKUPTM`) parameters to see if any backups are scheduled for the next half hour. If `BKUPDAT` or `BKUPTM` values do not appear in the message, no backups are scheduled.
   - If no backups are scheduled for the next half hour, continue this procedure at Step 4.
   - If backups are scheduled for the next half hour, get permission from your system administrator to cancel the scheduled backup (using the SCHED-BKUP-MEM command). When you know the system is ready, continue this procedure at Step 4.

4. Check for any pending commands by entering:

   `RTRV-CMD-STAT:::ALL;`

   The system responds with the following message:

```
  <TID #n YY-MM-DD HH:MM:SS>
M  RTRV CMD STAT::::ALL COMPLD
   /* CMDCTAG, INPUT CMD, CMDSTAT */
   " <CMDCTAG, INPUT CMD, CMDSTAT> "
;
```

   where

`INPUT CMD=` the commands that are pending execution

`CMDSTAT =` the status of the pending command. `IP` means the command is in-progress; `WRTSCE` means the command is waiting for resources

- If you do *not* find any pending commands, continue this procedure at Step 5.
- If you find any pending commands, wait a minute or two, reenter RTRV-CMD-STAT until you receive the message that no commands are executing or waiting for execution, then continue this procedure at Step 5.

The system response will look like the following message:

```
  <TID #n YY-MM-DD HH:MM:SS>
M  RTRV CMD STAT::::ALL COMPLD
;
```

5. Check for an optical cartridge in the optical drive (SEC), and if one is present, remove it by performing the following steps:
   a. Look at the LED on the optical drive (SEC).
      - If you find the LED is *not* lighted or flashing, continue this procedure at Step 5b.
      - If you find the LED is lighted or flashing, wait until the LED goes out, then continue this procedure at Step 5b.
   b. Press the eject button on the optical drive and remove the optical cartridge. If the optical cartridge does not eject, or you need detailed instructions, see Procedure 3-8, "Removing Optical Cartridges."
6. Obtain a spare SEC3 circuit pack and label it "SPARE SEC3."
   - If a spare is available, continue this procedure at Step 7.
   - If a spare is not available, the system should be kept in service until a spare is located. Do *not* continue with this procedure.
7. Place the main controller (MC) module into the out-of-service maintenance condition (`OOS-MCOND`) state by entering:

```
ED-STATE-EQPT::MC::OOS-MCOND;
```

   - If the system responds with the `DENY` message, call your system administrator or the next level of technical support.
   - If the system responds with the `COMPLD` message, continue this procedure at Step 7.

```
  <TID #n YY-MM-DD HH:MM:SS>
M  ED-STATE-EQPT::MC:: COMPLD
;
```

8. Park the heads on the DISKB hard disk drive by entering:

   RMV-EQPT::DISKB;

   This protects DISKB during transportation when returning the circuit pack for repair.

9. Remove the SEC3 circuit pack and label it "WORKING SEC3" and add the frame identification and any other information required by your local practices. If you need detailed instructions, see Procedure 3-2, "Removing Circuit Packs."

10. Install the SEC3 circuit pack labeled "SPARE SEC3." If you need detailed instructions, see Procedure 3-1, "Installing Circuit Packs."

11. Check the system response to see if the optical drive (SEC) restored autonomously and if the alarm cleared. The message should show the optical drive (SEC) in the in-service (IS) state.

```
   <TID #n YY-MM-DD HH:MM:SS>
A  <ASEQ> REPT RST EQPT
    /* LOC:STATE */
    " SEC:IS "
;
```

    - If the system response shows that the optical drive (SEC) restored to the in-service (IS) state, continue this procedure at Step 13.
    - If the system response does *not* show that the optical drive (SEC) restored to the in-service (IS) state, continue this procedure at Step 12.

12. Wait at least 30 seconds, then restore the optical drive (SEC) to service by entering:

    RST-EQPT::SEC;

    - If the system responds with the COMPLD message, SEC was restored to service. If no optical cartridge was present in SEC, the system generates a REPT EXCPTN SYS message. Continue this procedure at Step 13.
    - If the system responds with the DENY message, SEC was not restored. Note the problem, then continue this procedure at Step 13.

13. If an optical cartridge was found in the optical drive in Step 5, return it to the optical drive (SEC).

14. Wait at least 30 seconds, then restore the DISKB hard disk drive to service by entering:

    RST-EQPT::DISKB;

    The restore command automatically copies the contents of DISKA to DISKB.

- If the system responds with the COMPLD message, DISKB was restored to service. Continue this procedure at Step 15.
- If the system responds with the DENY message, DISKB was not restored. Call your system administrator or the next level of technical support.

15. Restore the main controller (MC) module to service by entering:

    RST-EQPT::MC;

    This step may take up to three minutes.

    - If the system responds with the COMPLD message, the main controller (MC) module was restored to service. Continue this procedure at Step 17.
    - If the system responds with the DENY message, the main controller (MC) module was not restored. Continue this procedure at Step 16.

16. Having received the DENY message in Step 14, reboot the system by simultaneously toggling the RESET ENABLE switch and pressing the RESET button.

    This step may take up to five minutes.

    - If the system successfully reboots, continue this procedure at Step 17.
    - If the system does *not* reboot, call your system administrator or the next level of technical support.

17. Update the labeling on the SEC3 circuit packs as follows:

    a. Relabel your spare SEC3 circuit pack that is now installed in the frame as "IN-SERVICE SEC3." Include the frame identification, date, and any other information required by your local practices.

    b. Relabel the SEC3 circuit pack that was removed from the frame in Step 9 as "DEFECTIVE." Return the circuit pack to the factory for repair. If you need detailed instructions, see Procedure 3-11, "Returning Circuit Packs for Repair."

Procedure 10-5. Recovering from SEC and DISKA Failure when DISKB is In-Service

Use Procedure 10-5 if both the optical drive (SEC) and the DISKA hard disk drive fail, but the DISKB hard disk drive is still in-service.

CAUTION:
Service interruption.
Failure to follow the procedure in the exact order as written affects traffic on the frame. If you are not thoroughly familiar with the DACS III-2000 system and this procedure, read Procedure 10-5 completely before executing it. If you still are uncertain how to proceed, call your system administrator or the next level of technical support.

CAUTION:
Electrostatic discharge (ESD) damage.
ESD can cause damage to the components of a DACS III-2000 system. Wear an ESD wrist strap when working around the frame.

1. Verify the state of the main controller (MC) module, the DISKA and DISKB hard disk drives, and the optical drive (SEC) using the following steps:

   a. Verify the state of the main controller (MC) module by entering:

   ```
   RTRV-STATE-EQPT::MC;
   ```

   The system response should show that the main controller (MC) module is in the in-service (`IS`) state.

   - If the state of the main controller (MC) module is `IS`, continue with checking the state of DISKB at Step 1b.
   - If the state of the main controller (MC) module is not `IS`, call your system administrator or the next level of technical support.

   b. Verify the states of the DISKA and DISKB hard drives and the optical drive (SEC) by entering:

   ```
   RTRV-STATE-EQPT::DISKA&DISKB&SEC;
   ```

   The system response should show that DISKA and SEC are in the out-of-service fault (`OOS-FLT`) state and DISKB is in the in-service active (`IS-ACT`) state.

- If *all* of the following are *true*, continue this procedure at Step 2:
  - — DISKA is OOS-FLT and the red alarm LED is lighted
  - — DISKB is IS-ACT
  - — SEC is OOS-FLT and the red alarm LED is lighted
- If *any* of the items in the previous list are *false*, return to Table 10-1 for the correct procedure or call your system administrator or the next level of technical support.
- If the state of DISKA is OOS-FLT and the LED is not lighted, call your system administrator or the next level of technical support.
- If the state of DISKA is not OOS-FLT, but DISKA is not functioning, call your system administrator or the next level of technical support.
- If the state of SEC is OOS-FLT and the LED is not lighted, call your system administrator or the next level of technical support.
- If the state of SEC is not OOS-FLT, but SEC is not functioning, call your system administrator or the next level of technical support.

2. Retrieve automatic backup information by entering:

   RTRV-BKUPSCHED-MEM;

   The system responds with the following message:

```
  <TID #n YY-MM-DD HH:MM:SS>
M  RTRV BKUPSCHED MEM::::PRI,,SEC COMPLD
   /* :FROMMEM,,TOMEM:MEMCLASS:INVL,BKUPDAT,BKUPTM: */
   ":PRI,,SEC:BOTH:,,:"
;
```

3. Check the date (BKUPDAT) and time (BKUPTM) parameters to see if any backups are scheduled for the next half hour. If BKUPDAT or BKUPTM values do not appear in the message, no backups are scheduled.
   - If no backups are scheduled for the next half hour, continue this procedure at Step 4.
   - If backups are scheduled for the next half hour, get permission from your system administrator to cancel the scheduled backup (using the SCHED-BKUP-MEM command). When you know the system is ready, continue this procedure at Step 4.

4. Check for any pending commands by entering:

   RTRV-CMD-STAT::::ALL;

   The system responds with the following message:

```
   <TID #n YY-MM-DD HH:MM:SS>
M   RTRV CMD STAT::::ALL COMPLD
    /* CMDCTAG, INPUT CMD, CMDSTAT */
    " <CMDCTAG, INPUT CMD, CMDSTAT> "
;
```

   where

   `INPUT CMD` = the commands that are pending execution

   `CMDSTAT` = the status of the pending command. `IP` means the command is in-progress; `WRTSCE` means the command is waiting for resources

   - If you do *not* find any pending commands, continue this procedure at Step 5.
   - If you find any pending commands, wait a minute or two, reenter RTRV-CMD-STAT until you receive the message that no commands are executing or waiting for execution, then continue this procedure at Step 5.
   - The system response will look like the following message:

```
   <TID #n YY-MM-DD HH:MM:SS>
M   RTRV CMD STAT::::ALL COMPLD
;
```

5. Check for an optical cartridge in the optical drive (SEC), and if one is present, remove it by performing the following steps:

   a. Look at the LED on the optical drive (SEC).

      - If you find the LED is *not* lighted or flashing, continue this procedure at Step 5b.
      - If you find the LED is lighted or flashing, wait until the LED goes out, then continue this procedure at Step 5b.

   b. Press the eject button on the optical drive and remove the optical cartridge. If the optical cartridge does not eject, or you need detailed instructions, see Procedure 3-8, "Removing Optical Cartridges."

6. Obtain spare PRI3 and SEC3 circuit packs and label them "SPARE PRI3" and "SPARE SEC3," respectively.

   - If you have only a spare SEC3 circuit pack, order a PRI3 circuit pack but do *not* continue with this procedure until the PRI3 circuit pack arrives.

- If you have spares for both PRI3 and SEC3 circuit packs, continue this procedure at Step 7.
- If you have only a spare PRI3 circuit pack, continue this procedure at Step 8.

7. Having spares for both the PRI3 and SEC3 circuit packs, perform the following steps:

   a. Place the main controller (MC) module into the out-of-service maintenance condition (OOS-MCOND) state by entering:

   ED-STATE-EQPT::MC::OOS-MCOND;

   The system response will look like the following message:

   ```
      <TID #n YY-MM-DD HH:MM:SS>
   M  ED-STATE-EQPT::MC:: COMPLD
   ;
   ```

   - If the system responds with the DENY message, call your system administrator or the next level of technical support.
   - If the system responds with the COMPLD message, continue with this procedure at Step 7b.

   b. Even though DISKA is in the out-of-service fault (OOS-FLT) state, attempt to park the heads on the DISKA hard disk drive by entering:

   RMV-EQPT::DISKA;

   This protects DISKA during transportation when returning the PRI3 circuit pack for repair. When the system responds with either the COMPLD message or the DENY message, continue this procedure at Step 7c.

   c. Remove the PRI3 circuit pack from the main controller (MC) module and label it "WORKING PRI3." Add the frame identification and any other information required by your local practices. If you need detailed instructions, see Procedure 3-2, "Removing Circuit Packs."

   d. Install the spare PRI3 circuit pack labeled "SPARE PRI3." If you need detailed instructions, see Procedure 3-1, "Installing Circuit Packs."

   e. Put the spare PRI3 circuit pack into service by entering:

   RST-EQPT::DISKA;

   The restore command automatically copies the contents of DISKB to DISKA.

   - If the system responds with the COMPLD message, DISKA was restored to service and the DISKA alarm cleared. Continue this procedure at Step 7f.

- If the system responds with the DENY message, call your system administrator or the next level of technical support.

f. Park the heads on the DISKB hard disk drive by entering:

```
RMV-EQPT::DISKB;
```

This protects DISKB during handling.

- If the system responds with the COMPLD message and the minor alarm on DISKB clears, continue this procedure at Step 7g.
- If the system responds with the DENY message, call your system administrator or the next level of technical support.

g. Remove the SEC3 circuit pack and label it "WORKING SEC3." Add the frame identification and any other information required by your local practices. If you need detailed instructions, see Procedure 3-2, "Removing Circuit Packs."

h. Install the SEC3 circuit pack labeled "SPARE SEC3." If you need detailed instructions, see Procedure 3-1, "Installing Circuit Packs."

i. Look for the autonomous message that indicates the optical drive (SEC) autorestored:

```
   <TID #n YY-MM-DD HH:MM:SS>
A  <ASEQ> REPT RST EQPT
    /* LOC:STATE */
    SEC:IS"
;
```

- If SEC restored automatically, continue this procedure at Step 7j.
- If SEC did not autorestore, wait at least 30 seconds, then restore it manually by entering:

```
RST-EQPT::SEC;
```

  — If the system responds with the COMPLD message, continue this procedure at Step 7j. If no optical cartridge was present in SEC, the system generates a REPT EXCPTN SYS message.

  — If the system responds with the DENY message, call your system administrator or the next level of technical support.

j. If an optical cartridge was found in Step 5, wait at least 30 seconds, then reinsert it into the optical drive (SEC).

k. Put DISKB into service by entering:

```
RST-EQPT::DISKB;
```

The restore command automatically copies the contents of DISKA to DISKB.

- If the system responds with the COMPLD message, DISKB was restored to service and the DISKB alarm cleared. Continue this procedure at Step 7l.
- If the system responds with the DENY message, call your system administrator or the next level of technical support.

l. Restore the main controller (MC) module to service by entering:

```
RST-EQPT::MC;
```

This step may take up to three minutes.

- If the system responds with the COMPLD message, the main controller (MC) module was restored to service. Continue this procedure at Step 9.
- If the system responds with the DENY message, the main controller (MC) module was not restored. Continue this procedure at Step 7m.

m. Having received the DENY message in Step 6l, reboot the system by simultaneously toggling the RESET ENABLE switch and pressing the RESET button.

During the reset, you may see boot messages on any terminals connected to CILINK-1 or CILINK-2. On CILINK-1, these boot messages are output at 1200 baud. On CILINK-2, the baud rate depends on the type of enhanced communications interface (ECI) circuit pack installed in the frame. For an ECI2, the baud rate is 1200; for an ECI5 the baud rate is 2400.

Reset completion time may be up to six minutes for a fully equipped 2048-size system. Smaller systems should take less time.

- If the system successfully reboots, you will see the following message:

```
login:

  <TID#0 YY-MM-DD HH:MM:SS>
A  001 REPT RST EQPT
   /* LOC:STATE */
   "MC:IS"
;

login:
```

With the system successfully rebooted, continue this procedure at Step 9.

- If the system does *not* reboot, meaning you do not receive the REPT RST EQPT message shown above or you do receive a boot message of either BOOT FAIL or RESET STOPPED, call your system administrator or the next level of technical support.

8. Having only a spare PRI3 circuit pack, perform the following steps:

   a. Place the main controller (MC) module into the out-of-service maintenance condition (OOS-MCOND) state by entering:

   ED-STATE-EQPT::MC::OOS-MCOND;

   If the system responds with the DENY message, call your system administrator or the next level of technical support.

   - If the system responds with the COMPLD message, continue with this procedure at Step 8b.

   ```
     <TID #n YY-MM-DD HH:MM:SS>
   M  ED-STATE-EQPT::MC:: COMPLD
   ;
   ```

   b. Park the heads on the DISKA hard disk drive by entering:

   RMV-EQPT::DISKA;

   This protects DISKA during handling.

   Regardless of whether you receive the COMPLD or DENY message, continue this procedure at Step 8c.

   c. Remove the PRI3 circuit pack and label it "WORKING PRI3." Add the frame identification and any other information required by your local practices. If you need detailed instructions, see Procedure 3-2, "Removing Circuit Packs."

   d. Install the PRI3 circuit pack labeled "SPARE PRI3." If you need detailed instructions, see Procedure 3-1, "Installing Circuit Packs."

   e. Restore DISKA to service by entering:

   RST-EQPT::DISKA;

   The restore command automatically copies the contents of DISKB to DISKA.

   - If the system responds with the COMPLD message, DISKA was restored to service and the DISKA alarm cleared. Continue this procedure at Step 8f.
   - If the system responds with the DENY message, DISKA was not restored to service. Call your system administrator or the next level of technical support.

f. Restore the main controller (MC) module to service by entering:

RST-EQPT::MC;

This step may take up to three minutes.

- If the system responds with the COMPLD message, the main controller (MC) module was restored to service and the major alarm on the main controller (MC) module cleared.

  Because a spare SEC3 circuit pack was not available, you still have a failure and a minor alarm on SEC. Continue this procedure at Step 9.

- If the system responds with the DENY message, the main controller (MC) module was not restored. Continue this procedure at Step 8g.

g. Having received the DENY message in Step 8f, reboot the system by simultaneously toggling the RESET ENABLE switch and pressing the RESET button.

During the reset, you may see boot messages on any terminals connected to CILINK-1 or CILINK-2. On CILINK-1, these boot messages are output at 1200 baud. On CILINK-2, the baud rate depends on the type of enhanced communications interface (ECI) circuit pack installed in the frame. For an ECI2, the baud rate is 1200; for an ECI5 the baud rate is 2400.

Reset completion time may be up to six minutes for a fully equipped 2048-size system. Smaller systems should take less time.

- If the system successfully reboots, you will see the following message:

```
login:

  <TID#0 YY-MM-DD HH:MM:SS>
A  001 REPT RST EQPT
   /* LOC:STATE */
   "MC:IS"
;

login:
```

With the system successfully rebooted, you have completed the procedure for recovering the DISKA hard disk drive. However, a failure still exists on the optical drive (SEC).

Continue this procedure at Step 9.

- If the system does *not* reboot, meaning you do not receive the `REPT RST EQPT` message shown above or you do receive a boot message of either `BOOT FAIL` or `RESET STOPPED`, call your system administrator or the next level of technical support.

9. Update the circuit pack labeling as follows:

   - If you performed Step 7, the replacement of both the PRI3 and SEC3 circuit packs, make the following changes:

     a. Relabel your spare PRI3 circuit pack that is now installed in the frame as "IN-SERVICE PRI3." Include the frame identification, date, and any other information required by your local practices.

     b. Relabel your spare SEC3 circuit pack that is now installed in the frame as "IN-SERVICE SEC3." Include the frame identification, date, and any other information required by your local practices.

     c. Relabel the PRI3 circuit pack that was removed from the frame in Step 6c as "DEFECTIVE." Return the circuit pack to the factory for repair. If you need detailed instructions, see Procedure 3-11, "Returning Circuit Packs for Repair."

     d. Relabel the SEC3 circuit pack that was removed from the frame in Step 7g as "DEFECTIVE." Return the circuit pack to the factory for repair. If you need detailed instructions, see Procedure 3-11, "Returning Circuit Packs for Repair."

   - If you performed Step 8, the replacement of only a PRI3 circuit pack, perform the following steps:

     a. Relabel your spare PRI3 circuit pack that is now installed in the frame as "IN-SERVICE PRI3." Include the frame identification, date, and any other information required by your local practices.

     b. Relabel the PRI3 circuit pack that was removed from the frame in Step 8b as "DEFECTIVE." Return the circuit pack to the factory for repair. If you need detailed instructions, see Procedure 3-11, "Returning Circuit Packs for Repair."

     c. Label your in-service SEC3 circuit pack with a note about the defective optical drive (SEC).

     d. Obtain a replacement SEC3 circuit pack. When it arrives, use Procedure 10-4, "Recovering from SEC Failure when DISKA and DISKB are In-Service" to replace the SEC3 circuit pack.

Procedure 10-6. Recovering from SEC and DISKB Failure when DISKA is In-Service

Use Procedure 10-6 if both the optical drive (SEC) and the DISKB hard disk drive fail, but the DISKA hard disk drive is still in-service.

CAUTION:
Service interruption.
Failure to follow the procedure in the exact order as written affects traffic on the frame. If you are not thoroughly familiar with the DACS III-2000 system and this procedure, read Procedure 10-6 completely before executing it. If you still are uncertain how to proceed, call your system administrator or the next level of technical support.

CAUTION:
Electrostatic discharge (ESD) damage.
ESD can cause damage to the components of a DACS III-2000 system. Wear an ESD wrist strap when working around the frame.

1. Verify the state of the main controller (MC) module, the DISKA and DISKB hard disk drives, and the optical drive (SEC) using the following steps:

   a. Verify the state of the main controller (MC) module by entering:

   ```
   RTRV-STATE-EQPT::MC;
   ```

   The system response should show that the main controller (MC) module is in the in-service (IS) state.

   - If the state of the main controller (MC) module is IS, continue with checking the state of the hard disk drives and optical drive at Step 1b.
   - If the state of the main controller (MC) module is out-of-service fault (OOS-FLT), out-of-service maintenance (OOS-MTCE), or out-of-service maintenance condition (OOS-MCOND), call your system administrator or the next level of technical support.

   b. Verify the state of the DISKA and DISKB hard disk drives and the optical drive (SEC) by entering:

   ```
   RTRV-STATE-EQPT::DISKA&DISKB&SEC;
   ```

   The system response should show that DISKA is in the in-service (IS) state, and DISKB and SEC are in the out-of-service fault (OOS-FLT) state.

   - If *all* of the following are *true*, continue this procedure at Step 2:
     — DISKA is IS-ACT

— DISKB is OOS-FLT *and* the red alarm LED is lighted

— SEC is OOS-FLT *and* the red alarm LED is lighted

- If *any* of the items in the previous list are *false*, return to Table 10-1 to find the correct procedure or call your system administrator or the next level of technical support.
- If DISKA is IS-ACT and the state of DISKB and SEC is OOS-FLT and the red alarm LEDs are *not* lighted, call your system administrator or the next level of technical support.
- If the state of DISKB and SEC is not OOS-FLT, but DISKB or SEC is not functioning, call your system administrator or the next level of technical support.

2. Retrieve automatic backup information by entering:

RTRV-BKUPSCHED-MEM;

The system responds with the following message:

```
   <TID #n YY-MM-DD HH:MM:SS>
M  RTRV BKUPSCHED MEM::::PRI,,SEC COMPLD
   /* :FROMMEM,,TOMEM:MEMCLASS:INVL,BKUPDAT,BKUPTM: */
   ":PRI,,SEC:BOTH:,,:"
;
```

3. Check the date (BKUPDAT) and time (BKUPTM) parameters to see if there are any backups scheduled during the next half hour. If BKUPDAT or BKUPTM values do not appear in the message, no backups are scheduled.
   - If no backups are scheduled for the next half hour, continue this procedure at Step 4.
   - If backups are scheduled for the next half hour, get permission from your system administrator to cancel the scheduled backup (using the SCHED-BKUP-MEM command). When you know the system is ready, continue this procedure at Step 4.
4. Check for any pending commands by entering:

RTRV-CMD-STAT:::ALL;

The system responds with the following message:

```
   <TID #n YY-MM-DD HH:MM:SS>
M  RTRV CMD STAT::::ALL COMPLD
   /* CMDCTAG, INPUT CMD, CMDSTAT */
   " <CMDCTAG, INPUT CMD, CMDSTAT> "
;
```

where

INPUT CMD = the commands that are pending execution

CMDSTAT = the status of the pending command. IP means the command is in-progress; WRTSCE means the command is waiting for resources

- If you do *not* find any pending commands, continue this procedure at Step 5.
- If you find any pending commands, wait a minute or two, re-enter RTRV-CMD-STAT until you receive the message that no commands are executing or waiting for execution, then continue this procedure at Step 5.

  The system response will look like the following message:

```
  <TID #n YY-MM-DD HH:MM:SS>
M  RTRV CMD STAT::::ALL COMPLD
;
```

5. Check for an optical cartridge in the optical drive (SEC), and if one is present, remove it by performing the following steps:

   a. Look at the LED on the optical drive (SEC).

      - If you find the LED is *not* lighted or flashing, continue this procedure at Step 5b.
      - If you find the LED is lighted or flashing, wait until the LED goes out, then continue this procedure at Step 5b.

   b. Press the eject button on the optical drive and remove the optical cartridge. If the optical cartridge does not eject, or you need detailed instructions, see Procedure 3-8, "Removing Optical Cartridges."

6. Obtain a spare SEC3 circuit pack and label it "SPARE SEC3."

   - If a spare is available, continue this procedure at Step 7.
   - If a spare is not available, the system should be kept in service until a spare is located. Do *not* continue with this procedure.

7. Place the main controller (MC) module into the out-of-service maintenance condition (OOS-MCOND) state by entering:

```
ED-STATE-EQPT::MC::OOS-MCOND;
```

   - If the system responds with the DENY message, call your system administrator or the next level of technical support.

- If the system responds with the COMPLD message, a major alarm with a MAN condition type will be reported on the main controller (MC) module. Continue this procedure at Step 8.

```
  <TID #n YY-MM-DD HH:MM:SS>
M  ED-STATE-EQPT::MC:: COMPLD
;
```

8. Remove the SEC3 circuit pack and label it "WORKING SEC3." Add the frame identification and any other information required by your local practices. If you need detailed instructions, see Procedure 3-2, "Removing Circuit Packs."

9. Install the SEC3 circuit pack labeled "SPARE SEC3." If you need detailed instructions, see Procedure 3-1, "Installing Circuit Packs."

10. Check the system response to see if the optical drive (SEC) restored autonomously and if the alarm cleared. The message should show the optical drive (SEC) in the in-service (IS) state.

```
  <TID #n YY-MM-DD HH:MM:SS>
A <ASEQ> REPT RST EQPT
   /* LOC:STATE */
   " SEC:IS "
;
```

- If the system response shows that the optical drive (SEC) restored to the in-service (IS) state, continue this procedure at Step 12.
- If the system response does *not* show that the optical drive (SEC) restored to the in-service (IS) state, continue this procedure at Step 11.

11. Wait at least 30 seconds, then restore the optical drive (SEC) to service by entering:

```
RST-EQPT::SEC;
```

- If the system responds with the COMPLD message, SEC was restored to service. If no optical cartridge was present in SEC, the system generates a REPT EXCPTN SYS message. Continue this procedure at Step 12.
- If the system responds with the DENY message, SEC was not restored. Note the problem, then continue this procedure at Step 12.

12. If an optical cartridge was found in the optical drive in Step 5, wait at least 30 seconds, then return it to the optical drive (SEC).

13. Restore the DISKB hard disk drive to service by entering:

```
RST-EQPT::DISKB;
```

The restore command automatically copies the contents of DISKA to DISKB.

- If the system responds with the COMPLD message, DISKB was restored to service. The DISKB alarms clear. Continue this procedure at Step 14.
- If the system responds with the DENY message, DISKB was not restored. Call your system administrator or the next level of technical support.

14. Restore the main controller (MC) module to service by entering:

    RST-EQPT::MC;

    This step may take up to three minutes.

    - If the system responds with the COMPLD message, the main controller (MC) module was restored to service. The alarm on the main controller (MC) module has cleared. Continue this procedure at Step 16.
    - If the system responds with the DENY message, the main controller (MC) module was not restored. Continue this procedure at Step 15.

15. Having receive the DENY message in Step 14, reboot the system by simultaneously toggling the RESET ENABLE switch and pressing the RESET button. Upon rebooting, the system autonomously restores SEC.

    During the reset, you may see boot messages on any terminals connected to CILINK-1 or CILINK-2. On CILINK-1, these boot messages are output at 1200 baud. On CILINK-2, the baud rate depends on the type of enhanced communications interface (ECI) circuit pack installed in the frame. For an ECI2, the baud rate is 1200; for an ECI5 the baud rate is 2400.

    Reset completion time may be up to six minutes for a fully equipped 2048-size system. Smaller systems should take less time.

    - If the system successfully reboots, you will see the following message:

      ```
      login:

        <TID#0 YY-MM-DD HH:MM:SS>
      A  001 REPT RST EQPT
         /* LOC:STATE */
         "MC:IS"
      ;

      login:
      ```

      With the system successfully rebooted, continue this procedure at Step 16.

    - If the system does *not* reboot, meaning you do not receive the REPT RST EQPT message shown above or you do receive a boot message of either BOOT FAIL or RESET STOPPED, call your system administrator or the next level of technical support.

16. Update the labeling on the SEC3 circuit packs as follows:

    a. Relabel your spare SEC3 circuit pack that is now installed in the frame as "IN-SERVICE SEC3." Include the frame identification, date, and any other information required by your local practices.

    b. Relabel the SEC3 circuit pack that was removed from the frame in Step 8 as "DEFECTIVE." Return the circuit pack to the factory for repair. If you need detailed instructions, see Procedure 3-11, "Returning Circuit Packs for Repair."

Troubleclearing—DS3 Fault Isolation

11

Contents

PAINTGRT Condition Type for DS3 Circuit Packs 11-1

Procedure 11-1.
Clearing PAINTGRT Condition Type on DS3IN, DS3OUT, and DS3SW Circuit Packs 11-2

Procedure 11-2.
DS3IN:MN,PAINTGRT Alarm with No Other DS3IN or DS3SW Circuit Packs Showing PAINTGRT 11-5

Procedure 11-3.
DS3OUT:MN,PAINTGRT Alarm with No Other DS3OUT or DS3SW Circuit Packs Showing PAINTGRT 11-21

Procedure 11-4.
DS3IN:MN,PAINTGRT and DS3SW:MN, PAINTGRT Alarms with No Other DS3IN or DS3SW Circuit-Packs Showing PAINTGRT 11-38

Procedure 11-5.
DS3IN:MJ,PAINTGRT and DS3SW:MN, PAINTGRT Alarms with No Other DS3IN or DS3SW Circuit Packs Showing PAINTGRT 11-49

Procedure 11-6.
DS3IN:MJ,PAINTGRT, DS3IN:MN,PAINTGRT and DS3SW:MN,PAINTGRT Alarms with No Other DS3IN or DS3SW Circuit Packs Showing PAINTGRT 11-65

Contents

Procedure 11-7.
DS3OUT:MN,PAINTGRT and DS3SW:MN, PAINTGRT Alarms with No Other DS3OUT or DS3SW Circuit Packs Showing PAINTGRT 11-73

Procedure 11-8.
DS3OUT:MJ,PAINTGRT and DS3SW:MN, PAINTGRT Alarms with No Other DS3OUT or DS3SW Circuit Packs Showing PAINTGRT 11-84

Procedure 11-9.
DS3OUT:MJ,PAINTGRT, DS3OUT:MN, PAINTGRT, and DS3SW:MN,PAINTGRT Alarms with No Other DS3OUT or DS3SW Circuit Packs Showing PAINTGRT 11-100

Procedure 11-10.
DS3SW:MN,PAINTGRT Alarm with No DS3IN or DS3OUT Circuit Packs or Other DS3SW Circuit Packs Showing PAINTGRT 11-108

Troubleclearing—DS3 Fault Isolation

11

PAINTGRT Condition Type for DS3 Circuit Packs

CAUTION:
Improper troubleclearing.
Use of the procedures in Chapter 11 before executing Procedure 9-1 will result in improper troubleclearing. Execute Procedure 9-1 and come to this chapter ***only*** *if instructed to do so.*

The condition type PAINTGRT occurs as a result of the DACS III-2000 system's detection of the loss of a valid signal internal to the frame. This loss includes any failure from an output channel of the DS3IN interface circuit pack, through the DS3SW CTR circuit pack, and into the DS3OUT interface circuit pack.

Depending on the type and location of the actual failure, a single failure can point to, and cause the autonomous switching of, either one or two circuit packs. Additionally, the alarm levels of the PAINTGRT conditions may vary, depending upon other conditions that may be present in the frame at the same time.

Because DACS III-2000 treats mated circuit packs as a single protectable entity, there is a small class of failures that cannot be isolated to a single pack of the pair. In very rare cases fault isolation may alarm the mate of a faulty circuit pack but not the faulty circuit pack itself. In these cases, the procedures tell you to stop and call your system administrator or next level of technical support. Do not try to replace either circuit pack yourself because, if protection is not available, replacing the wrong one will cause a loss of service.

CAUTION:
Inappropriate troubleclearing.
Use of individual PAINTGRT procedures for DS3 circuit packs without first executing Procedure 11-1 will result in inappropriate troubleclearing activities. Procedure 11-1 should be considered the "umbrella" procedure that is ***always*** *executed first before moving to one of the subordinate procedures, which are numbered 11-2 through 11-10.*

Procedure 11-1. Clearing PAINTGRT Condition Type on DS3IN, DS3OUT, and DS3SW Circuit Packs

CAUTION:
Electrostatic discharge (ESD) damage.
ESD can cause damage to the components of a DACS III-2000 system. Wear an ESD wrist strap when working around the frame.

1. Begin to determine the conditions that are currently affecting the frame by entering:

   RTRV-ALM-EQPT::ALL;

   The system responds with one of the following messages that identifies the circuit pack(s) associated with the PAINTGRT condition type:

   — For *Message Set 1*:

   ```
     <TID #n YY-MM-DD HH:MM:SS>
   M  RTRV ALM EQPT::ALL COMPLD
      /* LOC:NTFCNCDE,CONDTYPE,SRVEFF */
      "<LOC:NTFCNCDE,CONDTYPE,SRVEFF>"
   ;
   ```

   — For *Message Set 2*:

   ```
     <TID YY-MM-DD HH:MM:SS>
   M  RTRV ALM EQPT::ALL COMPLD
      "<LOC:NTFCNCDE,CONDTYPE,SRVEFF>"
   ;
   ```

   where

LOC	=	the equipment location(s)
NTFCNCDE	=	the notification code; MJ is a major alarm, MN is a minor alarm
CONDTYPE	=	the condition type
SRVEFF	=	the effect on the system's service; SA is service-affecting, NSA is not service-affecting

A failed circuit pack will also have a lighted red LED. (If a circuit pack has the PAINTGRT condition active but no red LED is lighted on the pack, it is likely that the LED is not functional for that pack. This can be verified by pressing the LAMP TEST pushbutton, and verifying that the LED for that pack remains out when the rest of the LEDs for that shelf are lighted.)

2. Write down the system response.
3. Select from Table 11-1 the scenario that matches your system response.
4. Correct the PAINTGRT condition type using the procedure listed next to the scenario that you identified in Step 3.

Table 11-1. PAINTGRT Decision Tree

IF, for circuit pack(s)...	the system response from RTRV-ALM-EQPT is...	AND there is (are)...	THEN use...
DS3IN	DS3IN:MN,PAINTGRT	no other DS3IN or DS3SW circuit pack(s) with PAINTGRT condition	Procedure 11-2
	DS3IN:MN,PAINTGRT DS3IN:MN,PAINTGRT ...	more than one DS3IN and/or DS3SW circuit pack with PAINTGRT condition	Procedure 11-2*
DS3OUT	DS3OUT:MN,PAINTGRT	no other DS3OUT, DS3IN or DS3SW circuit pack(s) with PAINTGRT condition	Procedure 11-3
	DS3OUT:MN,PAINTGRT DS3OUT:MN,PAINTGRT ...	more than one DS3OUT and/or DS3SW circuit pack (but no DS3IN circuit packs) with PAINTGRT condition	Procedure 11-3*
DS3IN (including P1 and P2), DS3SW	DS3IN:MN,PAINTGRT DS3SW:MN,PAINTGRT	no other DS3IN or DS3SW circuit pack(s) with PAINTGRT condition	Procedure 11-4
	DS3IN:MJ,PAINTGRT DS3SW:MN,PAINTGRT	no other DS3OUT or DS3SW circuit pack(s) with PAINTGRT condition	Procedure 11-5
	DS3IN:MJ,PAINTGRT DS3IN:MN,PAINTGRT DS3SW:MN,PAINTGRT	no other DS3OUT or DS3SW circuit pack(s) with PAINTGRT condition	Procedure 11-6
DS3OUT (including P1 and P2), DS3SW	DS3OUT:MN,PAINTGRT DS3SW:MN,PAINTGRT	no other DS3OUT or DS3SW circuit pack(s) with PAINTGRT condition	Procedure 11-7
	DS3OUT:MJ,PAINTGRT DS3SW:MN,PAINTGRT	no other DS3OUT or DS3SW circuit pack(s) with PAINTGRT condition	Procedure 11-8
	DS3OUT:MJ,PAINTGRT DS3OUT:MN,PAINTGRT DS3SW:MN,PAINTGRT	no other DS3OUT or DS3SW circuit pack(s) with PAINTGRT condition	Procedure 11-9
DS3SW	DS3SW:MN,PAINTGRT	no DS3IN or DS3OUT circuit packs(s) or other DS3SW circuit pack(s) with PAINTGRT condition	Procedure 11-10

*If there is more than one DS3IN or DS3OUT circuit pack with the PAINTGRT condition type, clear the PAINTGRT alarm on the DS3IN circuit pack(s) first, then the DS3OUT circuit.

Procedure 11-2. DS3IN:MN,PAINTGRT Alarm with No Other DS3IN or DS3SW Circuit Packs Showing PAINTGRT

Please note that there are three sections within Procedure 11-2; each section represents one possible source of the PAINTGRT condition:

- Checking the DS3IN Circuit Pack
- Checking the DS3SW Circuit Pack
- Checking the Cables.

Sometimes you will use the steps in all three sections to clear the PAINTGRT condition; other times only the first, or first and second, sections will be needed. *However, regardless of the number of sections you use, the steps must be executed in the order presented.*

CAUTION:
Electrostatic discharge (ESD) damage.
ESD can cause damage to the components of a DACS III-2000 system. Wear an ESD wrist strap when working around the frame.

Checking the DS3IN Circuit Pack

1. Have the system output from Procedure 11-1, in which you identified the affected DS3IN circuit pack, available for referencing.
2. Obtain a spare DS3IN (ARW1) circuit pack.
   - If a spare circuit pack is not available, stop here and call your system administrator or the next level of technical support.
   - If a spare circuit pack is available, continue this procedure at Step 3.
3. At the craft interface terminal, verify that the DS3IN circuit pack is in the out-of-service fault (OOS-FLT) state by entering:

   RTRV-STATE-EQPT::ELOC::ALL;

   where

   ELOC = the DS3IN circuit pack identified in Step 1, specified as DS3IN-{1 through 8}-{1 through 30}

   The system should respond with one of the following messages:

— For *Message Set 1*:

```
  <TID #n YY-MM-DD HH:MM:SS>
M  RTRV STATE EQPT::<ELOC>::ALL COMPLD
   /* LOC:STATE */
   " DS3IN-<unit-slot>:OOS-FLT "
;
```

— For *Message Set 2*:

```
  <TID YY-MM-DD HH:MM:SS>
M  RTRV STATE EQPT::<ELOC>::ALL COMPLD
   " DS3IN-<unit-slot>:OOS-FLT "
;
```

Do one of the following:

- If the system shows the DS3IN circuit pack is out-of-service fault (OOS-FLT), continue this procedure at Step 4.
- If the system responds with any other state, stop here and call your system administrator or the next level of technical support.

4. At the craft interface terminal, verify that the related protection circuit packs are in the active (ACT) state by entering:

RTRV-STATE-EQPT::ELOC::ALL;

where

ELOC = the protection packs; identified as DS3IN-{1 through 8}-P1&-P2

The system should respond with one of the following messages:

— For *Message Set 1*:

```
  <TID #n YY-MM-DD HH:MM:SS>
M  RTRV STATE EQPT::<ELOC>::ALL COMPLD
   /* LOC:STATE */
   " DS3IN-<unit>-P1:ACT "
   " DS3IN-<unit>-P2:ACT "
;
```

— For *Message Set 2*:

```
  <TID YY-MM-DD HH:MM:SS>
M  RTRV STATE EQPT::<ELOC>::ALL COMPLD
   " DS3IN-<unit>-P1:ACT "
   " DS3IN-<unit>-P2:ACT "
;
```

- If the system shows the protection circuit packs are active (ACT), continue this procedure at Step 5.
- If the system responds with any other state, stop here and call your system administrator or the next level of technical support.

5. Go to the DACS III-2000 frame and remove the protected DS3IN circuit pack that was identified in Step 1. If you need detailed instructions, see Procedure 3-2, "Removing Circuit Packs."

6. Using standard office procedures, write down the
   - serial number of the removed DS3IN circuit pack
   - unit and slot from which it was removed Set aside the removed DS3IN circuit pack until the procedure instructs you to do something with it.
7. Insert the spare DS3IN circuit pack into the empty slot. If you need detailed instructions, see Procedure 3-1, "Installing Circuit Packs."
8. At the craft interface terminal, check to see if the previous steps have cleared the problem by entering:

   TEST-PATH-T3::::PAINTGRT;

   The system responds with one of the following messages:

   - For *Message Set 1*:

```
  <TID #n YY-MM-DD HH:MM:SS>
M TEST PATH T3::::PAINTGRT COMPLD
   /* DS3_IN,DS3_OUT:LOC,CHAN_OUT:LOC,CHAN_IN,
         CHAN_OUT:LOC,CHAN_IN:TAG:RESULT */
   " <DS3_IN,DS3_OUT:LOC,CHAN_OUT:LOC,CHAN_IN,
         CHAN_OUT:LOC,CHAN_IN:TAG:RESULT> "
;
```

   - For *Message Set 2*:

```
  <TID YY-MM-DD HH:MM:SS>
M TEST PATH T3::::PAINTGRT COMPLD
   " <DS3_IN,DS3_OUT:LOC,CHAN_OUT:LOC,CHAN_IN,
         CHAN_OUT:LOC,CHAN_IN:TAG:RESULT> "
;
```

   where

   LOC = the DS3IN circuit pack location

   RESULT = the test results; NULL means that the test could not be run at the time it was requested, PASS means the specified path is fault-free, FAIL means the associated path is failed

   Do one of the following:

   - If the system responds with NULL, continue this procedure at Step 9.
   - If the system responds with PASS, continue this procedure at Step 10.
   - If the system responds with FAIL, continue this procedure at Step 11.

9. Having received a NULL response, check to see that *all* the statements that follow are true:

   a. The input and output unit controllers, associated with the DS3IN circuit pack identified in Step 1, are in the in-service (IS) state.

   b. The protection switch circuit packs within the input unit, associated with the DS3IN circuit pack identified in Step 1, are in the in-service (IS) state.

   c. The circuit packs along the failed path, associated with the DS3IN circuit pack identified in Step 1, are present and provisioned and have no active failure conditions other than the PAINTGRT condition.

   d. The input port, associated with the DS3IN circuit pack identified in Step 1, has a valid incoming DS3 signal present.

   Do one of the following:

   - If this is the first time you received the NULL response and all of the previous statements are *true*, you have a problem that needs to be reported to your system administrator or next level of technical support.
   - If this is the first time you received the NULL response and any or all of the previous statements are *false*, correct the situation(s) and repeat Step 8 from the beginning.
   - If this is the second time you've executed Step 8 and received the NULL response, stop here and call your system administrator or the next level of technical support.

10. Having received the PASS response, perform the following steps:

    a. Check the craft interface terminal for one of the following autonomous messages:

       — For *Message Set 1*:

```
  <TID #n YY-MM-DD HH:MM:SS>
A <ASEQ> REPT SW EQPT
    /* WORKING ENTITY,SWITCH DIRECTION */
    " <WORKING ENTITY>,WKG "
;
```

       — For *Message Set 2*:

```
  <TID YY-MM-DD HH:MM:SS>
A <ASEQ> REPT SW EQPT
    " <WORKING ENTITY>,WKG "
;
```

       where

       WORKING ENTITY = the DS3IN circuit pack identified in Step 1

b. Verify that the DS3IN circuit pack identified in Step 1 no longer generates an alarm, by entering the two commands that follow:

RTRV-ALM-EQPT::ALL::,PAINTGRT;

and

RTRV-PATH-T3::ALL::PAINTGRT;

In both system responses, the DS3IN circuit pack identified in Step 1 should *not* appear in the message.

c. Using standard office procedures, label and record the DS3IN circuit pack, set aside in Step 6, as failed and in need of repair. If you need instructions for returning a failed circuit pack, see Procedure 3-11, "Returning Circuit Packs for Repair."

d. You have successfully corrected the problem. If more alarms exist on the frame, return to Procedure 9-1, "How to Clear Alarms," to determine the next corrective action to take.

Checking the DS3SW Circuit Pack

11. Having received the FAIL response, check for the DS3SW circuit pack that is associated with the failed path by entering:

RTRV-PATH-T3::ALL::PAINTGRT;

The system should respond with one of the following messages:

— For *Message Set 1*:

```
  <TID #n YY-MM-DD HH:MM:SS>
M  RTRV PATH T3::: COMPLD
   /* DS3_IN,DS3_OUT:LOC,CHAN_OUT:LOC,CHAN_IN,
         CHAN_OUT:LOC,CHAN_IN */
   " <DS3_IN,DS3_OUT:LOC,CHAN_OUT:LOC,CHAN_IN,
         CHAN_OUT:LOC,CHAN_IN> "
;
```

— For *Message Set 2*:

```
  <TID YY-MM-DD HH:MM:SS>
M  RTRV PATH T3::: COMPLD
   " <DS3_IN,DS3_OUT:LOC,CHAN_OUT:LOC,CHAN_IN,
         CHAN_OUT:LOC,CHAN_IN> "
;
```

Do one of the following:

- If the system responds with COMPLD, perform the following steps:

a. Determine the number of failed paths in the message. If there is only one failed path, continue this procedure at Step 11c.

b. Examine the DS3SW circuit pack contained in each line of the message to determine if the DS3SW is the same in each line of the message or if more than one DS3SW appears. The second LOC parameter shows the DS3SW location, specified as DS3SW-{1 through 4}-{1 through 16}.

   — If the same DS3SW circuit pack appears in each and every line of the message, continue this procedure at Step 11c.

   — If more than one DS3SW circuit pack appears in the message, continue this procedure at Step 20.

c. Write down the location of the DS3SW circuit pack identified in the message. The second LOC parameter shows the DS3SW location, specified as DS3SW-{1 through 4}-{1 through 16}.

   Remember, when you look at the frame this DS3SW circuit pack will *not* have a lighted red LED.

d. Continue this procedure at Step 12.

- If the system responds with DENY, stop here and call your system administrator or the next level of technical support.

12. Obtain a spare DS3SW (AWL1 or AYJ1) circuit pack.

    - If a spare circuit pack is not available, stop here and call your system administrator or the next level of technical support.
    - If a spare circuit pack is available, continue this procedure at Step 13.

13. Switch the DS3SW circuit pack to protection by entering:

    SW-TOPROTN-EQPT::ELOC;

    where

    ELOC = the DS3SW circuit pack identified in Step 11, specified as DS3SW-{1 through 4}-{1 through 16}

14. Go to the DACS III-2000 frame and remove the DS3SW circuit pack that was identified in Step 11.

    - If you are working on a 1024-size frame and need detailed instructions, see Procedure 3-2, "Removing Circuit Packs."
    - If you are working on a 2048-size frame and need detailed instructions, see Procedure 3-4, "Removing DS3SWL CTR Circuit Packs."

15. Using standard office procedures, write down the
    - — serial number of the removed DS3SW circuit pack
    - — the slot from which it was removed Set aside the removed DS3SW circuit pack until the procedure instructs you to do something with it.
16. Insert the spare DS3SW circuit pack into the empty slot.
    - If you are working on a 1024-size frame and need detailed instructions, see Procedure 3-1, "Installing Circuit Packs."
    - If you are working on a 2048-size frame and need detailed instructions, see Procedure 3-3, "Installing DS3SWL CTR Circuit Packs."
17. At the craft interface terminal, check to see if the previous steps have cleared the problem by entering:

    TEST-PATH-T3::::PAINTGRT;

    The system responds with one of the following messages:

    — For *Message Set 1*:

```
  <TID #n YY-MM-DD HH:MM:SS>
M  TEST PATH T3::::PAINTGRT COMPLD
   /* DS3_IN,DS3_OUT:LOC,CHAN_OUT:LOC,CHAN_IN,
         CHAN_OUT:LOC,CHAN_IN:TAG:RESULT */
   " <DS3_IN,DS3_OUT:LOC,CHAN_OUT:LOC,CHAN_IN,
         CHAN_OUT:LOC,CHAN_IN:TAG:RESULT> "
;
```

    — For *Message Set 2*:

```
  <TID YY-MM-DD HH:MM:SS>
M  TEST PATH T3::::PAINTGRT COMPLD
   " <DS3_IN,DS3_OUT:LOC,CHAN_OUT:LOC,CHAN_IN,
         CHAN_OUT:LOC,CHAN_IN:TAG:RESULT> "
;
```

    where

    `LOC` = the DS3SW circuit pack location identified in Step 11, specified as DS3SW-{1 through 4}-{1 through 16}

    `RESULT` = the test results; `NULL` means that the test could not be run at the time it was requested, `PASS` means the specified path is fault-free, `FAIL` means the associated path is failed

    Do one of the following:

    - If the system responds with `NULL`, continue this procedure at Step 18.
    - If the system responds with `PASS`, continue this procedure at Step 19.
    - If the system responds with `FAIL`, continue this procedure at Step 20.

18. Having received a NULL response, check to see that *all* the statements that follow are true:

    a. The input and output unit controllers, associated with the DS3IN circuit pack identified in Step 1, are in the in-service (IS) state.

    b. The protection switch circuit packs within the input unit, associated with the DS3IN circuit pack identified in Step 1, are in the in-service (IS) state.

    c. The circuit packs along the failed path, associated with the DS3IN circuit pack identified in Step 1, are present and provisioned and have no active failure conditions other than the PAINTGRT condition.

    d. The input port, associated with the DS3IN circuit pack identified in Step 1, has a valid incoming DS3 signal present.

    Do one of the following:

    - If this is the first time you received the NULL response and all of the previous statements are *true*, you have a problem that needs to be reported to your system administrator or next level of technical support.
    - If this is the first time you received the NULL response and any or all of the previous statements are *false*, correct the situation(s) and repeat Step 17 from the beginning.
    - If this is the second time you've executed Step 17 and received the NULL response, stop here and call your system administrator or the next level of technical support.

19. Having received the PASS response, perform the following steps:

    a. Check the craft interface terminal for one of the following autonomous messages:

    — For *Message Set 1*:

```
  <TID #n YY-MM-DD HH:MM:SS>
A <ASEQ> REPT SW EQPT
    /* WORKING ENTITY,SWITCH DIRECTION */
    " <WORKING ENTITY>,WKG "
;
```

    — For *Message Set 2*:

```
  <TID YY-MM-DD HH:MM:SS>
A <ASEQ> REPT SW EQPT
    " <WORKING ENTITY>,WKG "
;
```

    where

    WORKING ENTITY = the DS3IN circuit pack identified in Step 1

b. Verify that the DS3IN circuit pack identified in Step 1 no longer generates an alarm, by entering the two commands that follow:

RTRV-ALM-EQPT::ALL::,PAINTGRT;

and

RTRV-PATH-T3::ALL::PAINTGRT;

In both system responses, the DS3IN circuit pack identified in Step 1 should *not* appear in the message and the red LED should no longer be lighted.

c. At the craft interface terminal, switch the DS3SW to a working state by entering:

ALW-SW-EQPT::ELOC::WKG;

where

ELOC = the DS3SW circuit pack location identified in Step 11, specified by DS3SW-{1 through 4}-{1 through 16}

d. Verify a successful switch to working of the DS3SW circuit pack identified in Step 11 by entering:

RTRV-STATE-EQPT::ELOC;

where

ELOC = the DS3SW circuit pack

The system output should be one of the following messages:

— For *Message Set 1*:

```
  <TID #n YY-MM-DD HH:MM:SS>
M  RTRV STATE EQPT::<ELOC>::ALL COMPLD
   /* LOC:STATE */
   " <LOC>:ACT "
;
```

— For *Message Set 2*:

```
  <TID YY-MM-DD HH:MM:SS>
M  RTRV STATE EQPT::<ELOC>::ALL COMPLD
   " <LOC>:ACT "
;
```

where

LOC = the DS3SW circuit pack identified in Step 11

- If the system shows the DS3SW circuit pack identified in Step 11 is ACT, continue this procedure at Step 19e.
- If the system responds with any other state, stop here and call your system administrator or the next level of technical support.

e. Using standard office procedures, label and record the DS3SW circuit pack, set aside in Step 15, as failed and in need of repair. If you need instructions for returning a failed circuit pack, see Procedure 3-11, "Returning Circuit Packs for Repair."

f. Since the original DS3IN circuit pack is not at fault, it can be put in the spares storage cabinet for future use.

g. You have successfully corrected the problem. If more alarms exist on the frame, return to Procedure 9-1, "How to Clear Alarms," to determine the next corrective action to take.

Checking the Cables

20. Identify the failed cable by entering:

RTRV-CABLE-T3::ALL::PAINTGRT;

The system responds with one of the following messages:

— For *Message Set 1*:

```
  <TID #n YY-MM-DD HH:MM:SS>
M  RTRV CABLE T3::::PAINTGRT COMPLD
   /* DS3IN,CABLE,PIN #:DS3SW_IN,CABLE,PIN #:
         DS3SW_OUT,CABLE,PIN #:DS3OUT,CABLE,PIN # */
   " <DS3IN,CABLE,PIN #:DS3SW_IN,CABLE,PIN #:
         DS3SW_OUT,CABLE,PIN #:DS3OUT,CABLE,PIN #> "
;
```

— For *Message Set 2*:

```
   <TID YY-MM-DD HH:MM:SS>
M   RTRV CABLE T3::::PAINTGRT COMPLD
    " <DS3IN,CABLE,PIN #:DS3SW_IN,CABLE,PIN #:
         DS3SW_OUT,CABLE,PIN #:DS3OUT,CABLE,PIN #> "
;
```

Be certain to note the cable that is associated with the DS3IN circuit pack identified in Step 1. The numbers in the CABLE field, those starting with J, correlate to the numbers on the octopus cable connectors attached to the backplane. The suspected cable segment will be that segment between the DS3 input interface (DS3IN INTFC) module and the DS3 switch (DS3SW) module.

21. Make sure you have written down the cable's location for future use.

22. Wearing an ESD wrist strap, remove the backplane covers. Using the cable identification from Step 21, visually examine, at both ends, the cable that runs between the DS3IN module and the DS3SW module.

23. Visually verify that the cable is correctly plugged in and that there are no offset, misaligned, or cocked connectors.

- If you observe any of the above problems, continue this procedure at Step 24.
- If you do *not* observe any problems with the cable, continue this procedure at Step 28.

24. Rectify the problem observed with the cable identified in Step 21.

25. At the craft interface terminal, check to see if the previous steps have cleared the problem by entering:

    TEST-PATH-T3::::PAINTGRT;

    The system responds with one of the following messages:

    — For *Message Set 1*:

    ```
      <TID #n YY-MM-DD HH:MM:SS>
    M  TEST PATH T3:::PAINTGRT COMPLD
       /* DS3_IN,DS3_OUT:LOC,CHAN_OUT:LOC,CHAN_IN,
             CHAN_OUT:LOC,CHAN_IN:TAG:RESULT */
       " <DS3_IN,DS3_OUT:LOC,CHAN_OUT:LOC,CHAN_IN,
             CHAN_OUT:LOC,CHAN_IN:TAG:RESULT> "
    ;
    ```

    — For *Message Set 2*:

    ```
      <TID YY-MM-DD HH:MM:SS>
    M  TEST PATH T3:::PAINTGRT COMPLD
       " <DS3_IN,DS3_OUT:LOC,CHAN_OUT:LOC,CHAN_IN,
             CHAN_OUT:LOC,CHAN_IN:TAG:RESULT> "
    ;
    ```

    where,

    LOC = the DS3IN circuit pack location

    RESULT = the test results; NULL means that the test could not be run at the time it was requested, PASS means the specified path is fault-free, FAIL means the associated path is failed

    Do one of the following:

    - If the system responds with NULL, continue this procedure at Step 26.
    - If the system responds with PASS, continue this procedure at Step 27.
    - If the system responds with FAIL, continue this procedure at Step 28.

26. Having received a NULL response, check to see that *all* the statements that follow are true:

    a. The input and output unit controllers, associated with the DS3IN circuit pack identified in Step 1, are in the in-service (IS) state.

b. The protection switch circuit packs within the input unit, associated with the DS3IN circuit pack identified in Step 1, are in the in-service (IS) state.

c. The circuit packs along the failed path, associated with the DS3IN circuit pack identified in Step 1, are present and provisioned and have no active failure conditions other than the PAINTGRT condition.

d. The input port, associated with the DS3IN circuit pack identified in Step 1, has a valid incoming DS3 signal present.

Do one of the following:

- If this is the first time you received the NULL response and all of the previous statements are *true*, you have a problem that needs to be reported to your system administrator or next level of technical support.
- If this is the first time you received the NULL response and any or all of the previous statements are *false*, correct the situation(s) and repeat Step 25 from the beginning.
- If this is the second time you have executed Step 25 and received the NULL response, stop here and call your system administrator or the next level of technical support.

27. Having received the PASS response, perform the following steps:

a. Check the craft interface terminal for one of the following autonomous messages.

— For *Message Set 1*:

```
  <TID #n YY-MM-DD HH:MM:SS>
A <ASEQ> REPT SW EQPT
    /* WORKING ENTITY,SWITCH DIRECTION */
    " <WORKING ENTITY>,WKG "
;
```

— For *Message Set 2*:

```
  <TID YY-MM-DD HH:MM:SS>
A <ASEQ> REPT SW EQPT
    " <WORKING ENTITY>,WKG "
;
```

where

WORKING ENTITY = the DS3IN circuit pack identified in Step 1

b. Verify that the DS3IN circuit pack identified in Step 1 no longer generates an alarm, by entering the two commands that follow:

```
RTRV-ALM-EQPT::ALL::,PAINTGRT;
```

and

RTRV-PATH-T3::ALL::PAINTGRT;

In both system responses, the DS3IN circuit pack identified in Step 1 should *not* appear in the message and the red LED should no longer be lighted.

c. At the craft interface terminal, switch the DS3SW to a working state by entering:

ALW-SW-EQPT::ELOC::WKG;

where

ELOC = the DS3SW circuit pack identified in Step 11, specified as DS3SW-{1 through 4}-{1 through 16}

d. Verify a successful switch to working of the DS3SW circuit pack by entering:

RTRV-STATE-EQPT::ELOC;

where

ELOC = the DS3SW circuit pack identified in Step 11

The system response should be one of the following messages:

— For *Message Set 1*:

```
  <TID #n YY-MM-DD HH:MM:SS>
M  RTRV STATE EQPT::<ELOC>::ALL COMPLD
   /* LOC:STATE */
   " <LOC>:ACT "
;
```

— For *Message Set 2*:

```
  <TID YY-MM-DD HH:MM:SS>
M  RTRV STATE EQPT::<ELOC>::ALL COMPLD
   " <LOC>:ACT "
;
```

where

LOC = the DS3SW circuit pack identified in Step 11

e. Since the original DS3IN and DS3SW circuit packs are not at fault, they can be put in the spares storage cabinet for future use.

f. Wearing an ESD wrist strap, reattach the backplane covers.

g. You have successfully corrected the problem. If more alarms exist on the frame, return to Procedure 9-1, "How to Clear Alarms," to determine the next corrective action to take.

28. Having arrived at this step because you did *not* observe cable problems in Step 23 or because you received the FAIL response in Step 25, call your system administrator or the next level of technical support to fix the cable. Note the number of this procedure and the number of the next step so that you can return to the correct location once the failed cable is repaired.

29. After the failed cable has been repaired by your system administrator or the next level of technical support, continue this procedure at Step 30.

30. At the craft interface terminal, verify that the problem has been corrected by entering:

    TEST-PATH-T3::::PAINTGRT;

    The system responds with one of the following messages:

    — For *Message Set 1*:

    ```
      <TID #n YY-MM-DD HH:MM:SS>
    M  TEST PATH T3::::PAINTGRT COMPLD
       /* DS3_IN,DS3_OUT:LOC,CHAN_OUT:LOC,CHAN_IN,
             CHAN_OUT:LOC,CHAN_IN:TAG:RESULT */
       " <DS3_IN,DS3_OUT:LOC,CHAN_OUT:LOC,CHAN_IN,
             CHAN_OUT:LOC,CHAN_IN:TAG:>PASS "
    ;
    ```

    — For *Message Set 2*:

    ```
      <TID YY-MM-DD HH:MM:SS>
    M  TEST PATH T3::::PAINTGRT COMPLD
       " <DS3_IN,DS3_OUT:LOC,CHAN_OUT:LOC,CHAN_IN,
             CHAN_OUT:LOC,CHAN_IN:TAG:>PASS "
    ;
    ```

31. Verify that the system output is PASS. Having received the PASS response, perform the following steps:

    a. Check the craft interface terminal for one of the following autonomous messages:

    — For *Message Set 1*:

    ```
      <TID #n YY-MM-DD HH:MM:SS>
    A <ASEQ> REPT SW EQPT
       /* WORKING ENTITY,SWITCH DIRECTION */
       " <WORKING ENTITY>,WKG "
    ;
    ```

    — For *Message Set 2*:

    ```
      <TID YY-MM-DD HH:MM:SS>
    A <ASEQ> REPT SW EQPT
       " <WORKING ENTITY>,WKG "
    ;
    ```

where

WORKING ENTITY = the DS3IN circuit pack identified in Step 1

b. Verify that the DS3IN circuit pack identified in Step 1 no longer generates an alarm, by entering the two commands that follow:

RTRV-ALM-EQPT::ALL::,PAINTGRT;

and

RTRV-PATH-T3::ALL::PAINTGRT;

In both system responses, the DS3IN circuit pack identified in Step 1 should *not* appear in the message and the red LED should no longer be lighted.

c. At the craft interface terminal, switch the DS3SW to a working state by entering:

ALW-SW-EQPT::ELOC::WKG;

where

ELOC = the DS3SW circuit pack identified in Step 11, specified as DS3SW-{1 through 4}-{1 through 16}

d. Verify a successful switch to working of the DS3SW circuit pack by entering:

RTRV-STATE-EQPT::ELOC;

where

ELOC = the DS3SW circuit pack identified in Step 11

The system response should be one of the following messages:

— For *Message Set 1*:

```
  <TID #n YY-MM-DD HH:MM:SS>
M  RTRV STATE EQPT::<ELOC>::ALL COMPLD
   /* LOC:STATE */
   " <LOC>:ACT "
;
```

— For *Message Set 2*:

```
  <TID YY-MM-DD HH:MM:SS>
M  RTRV STATE EQPT::<ELOC>::ALL COMPLD
   " <LOC>:ACT "
;
```

where

LOC = the DS3SW circuit pack identified in Step 11

e. Since the original DS3IN and DS3SW circuit packs are not at fault, they can be put in the spares storage cabinet for future use.

f. Wearing an ESD wrist strap, reattach the backplane covers.

g. You have successfully corrected the problem. If more alarms exist on the frame, return to Procedure 9-1, "How to Clear Alarms," to determine the next corrective action to take.

Procedure 11-3. DS3OUT:MN,PAINTGRT Alarm with No Other DS3OUT or DS3SW Circuit Packs Showing PAINTGRT

Please note that there are three sections within Procedure 11-3; each section represents one possible source of the PAINTGRT condition:

- Checking the DS3OUT Circuit Pack
- Checking the DS3SW Circuit Pack
- Checking the Cables

Sometimes you will use the steps in all three sections to clear the PAINTGRT condition; other times only the first, or first and second, sections will be needed. *However, regardless of the number of sections you use, the steps must be executed in the order presented.*

CAUTION:
Electrostatic discharge (ESD) damage.
ESD can cause damage to the components of a DACS III-2000 system. Wear an ESD wrist strap when working around the frame.

Checking the DS3OUT Circuit Pack

1. Have the system output from Procedure 11-1, in which you identified the affected DS3OUT circuit pack, available for referencing.
2. Obtain a spare DS3OUT (ARW2) circuit pack.
   - If a spare circuit pack is not available, stop here and call your system administrator or the next level of technical support.
   - If a spare circuit pack is available, continue this procedure at Step 3.
3. At the craft interface terminal, verify that the DS3OUT circuit pack is in the out-of-service fault (`OOS-FLT`) state by entering:

   `RTRV-STATE-EQPT::ELOC::ALL;`

   where

   `ELOC` = the DS3OUT circuit pack identified in Step 1, specified as DS3OUT-{1 through 8}-{1 through 30}

   The system should respond with one of the following messages:

— For *Message Set 1*:

```
  <TID #n YY-MM-DD HH:MM:SS>
M  RTRV STATE EQPT::<ELOC>::ALL COMPLD
   /* LOC:STATE */
   " DS3OUT-<unit-slot>:OOS-FLT "
;
```

— For *Message Set 2*:

```
  <TID YY-MM-DD HH:MM:SS>
M  RTRV STATE EQPT::<ELOC>::ALL COMPLD
   " DS3OUT-<unit-slot>:OOS-FLT "
;
```

- If the system shows the DS3OUT circuit pack is out-of-service fault (OOS-FLT), continue this procedure at Step 4.
- If the system responds with any other state, stop here and call your system administrator or the next level of technical support.

4. At the craft interface terminal, verify that the related protection circuit packs are in the active (ACT) state by entering:

RTRV-STATE-EQPT::ELOC::ALL;

where

ELOC = the protection pack, identified as DS3OUT-{1 through 8}-P1&-P2

The system should respond with one of the following messages:

— For *Message Set 1*:

```
  <TID #n YY-MM-DD HH:MM:SS>
M  RTRV STATE EQPT::<ELOC>::ALL COMPLD
   /* LOC:STATE */
   " DS3IN-<unit>-P1:ACT "
   " DS3IN-<unit>-P2:ACT "
;
```

— For *Message Set 2*:

```
  <TID YY-MM-DD HH:MM:SS>
M  RTRV STATE EQPT::<ELOC>::ALL COMPLD
   " DS3IN-<unit>-P1:ACT "
   " DS3IN-<unit>-P2:ACT "
;
```

Do one of the following:

- If the system shows the protection circuit packs are active (ACT), continue this procedure at Step 5.

- If the system responds with any other state, stop here and call your system administrator or next level of technical support.

5. Go to the DACS III-2000 frame and remove the protected DS3OUT circuit pack that was identified in Step 1. If you need detailed instructions, see Procedure 3-2, "Removing Circuit Packs."
6. Using standard office procedures, write down the
   - serial number of the removed DS3OUT circuit pack
   - unit and slot from which it was removed Set aside the removed DS3OUT circuit pack until the procedure instructs you to do something with it.
7. On the spare DS3OUT circuit pack, set the LBO to match those of the extracted DS3OUT circuit pack. If you need detailed instructions, see Procedure 3-6, "Setting Line Buildout (LBO)."
8. Insert the spare DS3OUT circuit pack into the empty slot. If you need detailed instructions, see Procedure 3-1, "Installing Circuit Packs."
9. At the craft interface terminal, check to see if the previous steps have cleared the problem by entering:

   TEST-PATH-T3::::PAINTGRT;

   The system responds with one of the following messages:

   - For *Message Set 1*:

```
  <TID #n YY-MM-DD HH:MM:SS>
M  TEST PATH T3::::PAINTGRT COMPLD
   /* DS3_IN,DS3_OUT:LOC,CHAN_OUT:LOC,CHAN_IN,
         CHAN_OUT:LOC,CHAN_IN:TAG:RESULT */
   " <DS3_IN,DS3_OUT:LOC,CHAN_OUT:LOC,CHAN_IN,
         CHAN_OUT:LOC,CHAN_IN:TAG:RESULT> "
;
```

   - For *Message Set 2*:

```
  <TID YY-MM-DD HH:MM:SS>
M  TEST PATH T3::::PAINTGRT COMPLD
   " <DS3_IN,DS3_OUT:LOC,CHAN_OUT:LOC,CHAN_IN,
         CHAN_OUT:LOC,CHAN_IN:TAG:RESULT> "
;
```

   where

   `LOC` = the DS3OUT circuit pack location

   `RESULT` = the test results; `NULL` means that the test could not be run at the time it was requested, `PASS` means the specified path is fault-free, `FAIL` means the associated path is failed

Do one of the following:

- If the system responds with NULL, continue this procedure at Step 10.
- If the system responds with PASS, continue this procedure at Step 11.
- If the system responds with FAIL, continue this procedure at Step 12.

10. Having received a NULL response, check to see that *all* the statements that follow are true:

    a. The input and output unit controllers, associated with the DS3OUT circuit pack identified in Step 1, are in the in-service (IS) state.

    b. The protection switch circuit packs within the input unit, associated with the DS3OUT circuit pack identified in Step 1, are in the in-service (IS) state.

    c. The circuit packs along the failed path, associated with the DS3OUT circuit pack identified in Step 1, are present and provisioned and have no active failure conditions other than the PAINTGRT condition.

    d. The input port, associated with the DS3OUT circuit pack identified in Step 1, has a valid incoming DS3 signal present.

    Do one of the following:

    - If this is the first time you received the NULL response and all of the previous statements are *true*, you have a problem that needs to be reported to your system administrator or next level of technical support.
    - If this is the first time you received the NULL response and any or all of the previous statements are *false*, correct the situation(s) and repeat Step 9 from the beginning.
    - If this is the second time you've executed Step 9 and received the NULL response, stop here and call your system administrator or the next level of technical support.

11. Having received the PASS response, perform the following steps:

    a. Check the craft interface terminal for one of the following autonomous messages:

    — For *Message Set 1*:

```
  <TID #n YY-MM-DD HH:MM:SS>
A <ASEQ> REPT SW EQPT
   /* WORKING ENTITY,SWITCH DIRECTION */
   " <WORKING ENTITY>,WKG "
;
```

— For *Message Set 2*:

```
  <TID YY-MM-DD HH:MM:SS>
A <ASEQ> REPT SW EQPT
   " <WORKING ENTITY>,WKG "
;
```

where

`WORKING ENTITY` = the DS3OUT circuit pack identified in Step 1

b. Verify that the DS3OUT circuit pack identified in Step 1 no longer generates an alarm, by entering the two commands that follow:

`RTRV-ALM-EQPT::ALL::,PAINTGRT;`

and

`RTRV-PATH-T3::ALL::PAINTGRT;`

In both system responses, the DS3OUT circuit pack identified in Step 1 should *not* appear in the message.

c. Using standard office procedures, label and record the DS3OUT circuit pack, set aside in Step 6, as failed and in need of repair. If you need instructions for returning a failed circuit pack, see Procedure 3-11, "Returning Circuit Packs for Repair."

d. You have successfully corrected the problem. If more alarms exist on the frame, return to Procedure 9-1, "How to Clear Alarms," to determine the next corrective action to take.

Checking the DS3SW Circuit Pack

12. Having received the `FAIL` response, check for the DS3SW circuit pack that is associated with the failed path by entering:

`RTRV-PATH-T3::ALL::PAINTGRT;`

The system should respond with one of the following messages:

— *Message Set 1*:

```
  <TID #n YY-MM-DD HH:MM:SS>
M  RTRV PATH T3::: COMPLD
   /* DS3_IN,DS3_OUT:LOC,CHAN_OUT:LOC,CHAN_IN,
         CHAN_OUT:LOC,CHAN_IN */
   " <DS3_IN,DS3_OUT:LOC,CHAN_OUT:LOC,CHAN_IN,
         CHAN_OUT:LOC,CHAN_IN> "
;
```

— For *Message Set 2*:

```
  <TID YY-MM-DD HH:MM:SS>
M  RTRV PATH T3::: COMPLD
   " <DS3_IN,DS3_OUT:LOC,CHAN_OUT:LOC,CHAN_IN,
        CHAN_OUT:LOC,CHAN_IN> "
;
```

- If the system responds with COMPLD, perform the following steps:

  a. Determine the number of failed paths in the message. If there is only one failed path, continue this procedure at Step 12c.

  b. Examine the DS3SW circuit pack contained in each line of the message to determine if the DS3SW is the same in each line of the message or if more than one DS3SW appears. The second LOC parameter shows the DS3SW location, specified as DS3SW-{1 through 4}-{1 through 16}

     — If the same DS3SW circuit pack appears in each and every line of the message, continue this procedure at Step 12c.

     — If more than one DS3SW circuit pack appears in the message, continue this procedure at Step 20

  c. Write down the location of the DS3SW circuit pack identified in the message. The second LOC parameter shows the DS3SW location, specified as DS3SW-{1 through 4}-{1 through 16}.

     Remember, when you look at the frame this DS3SW circuit pack will *not* have a lighted red LED.

  d. Continue this procedure at Step 13.

- If the system responds with DENY, stop here and call your system administrator or the next level of technical support.

13. Obtain a spare DS3SW (AWL1 or AYJ1) circuit pack.

    - If a spare circuit pack is not available, stop here and call your system administrator or the next level of technical support.

    - If a spare circuit pack is available, continue this procedure at Step 14.

14. Switch the DS3SW circuit pack to protection by entering:

```
SW-TOPROTN-EQPT::ELOC;
```

where

ELOC = the DS3SW circuit pack identified in Step 12, specified as DS3SW-{1 through 4}-{1 through 16}

15. Go to the DACS III-2000 frame and remove the DS3SW circuit pack that was identified in Step 12.
    - If you are working on a 1024-size frame and need detailed instructions, see Procedure 3-2, "Removing Circuit Packs."
    - If you are working on a 2048-size frame and need detailed instructions, see Procedure 3-4, "Removing DS3SWL CTR Circuit Packs."
16. Using standard office procedures, write down the
    - serial number of the removed DS3SW circuit pack
    - the slot from which it was removed

    Set aside the removed DS3SW circuit pack until the procedure instructs you to do something with it.
17. Insert the spare DS3SW circuit pack into the empty slot.
    - If you are working on a 1024-size frame and need detailed instructions, see Procedure 3-1, "Installing Circuit Packs."
    - If you are working on a 2048-size frame and need detailed instructions, see Procedure 3-3, "Installing DS3SWL CTR Circuit Packs."
18. At the craft interface terminal, check to see if the previous steps have cleared the problem by entering:

    TEST-PATH-T3::::PAINTGRT;

    The system responds with one of the following messages:

    — For *Message Set 1*:

```
  <TID #n YY-MM-DD HH:MM:SS>
M  TEST PATH T3::::PAINTGRT COMPLD
   /* DS3_IN,DS3_OUT:LOC,CHAN_OUT:LOC,CHAN_IN,
         CHAN_OUT:LOC,CHAN_IN:TAG:RESULT */
   " <DS3_IN,DS3_OUT:LOC,CHAN_OUT:LOC,CHAN_IN,
         CHAN_OUT:LOC,CHAN_IN:TAG:RESULT> "
;
```

    — For *Message Set 2*:

```
  <TID YY-MM-DD HH:MM:SS>
M  TEST PATH T3::::PAINTGRT COMPLD
   " <DS3_IN,DS3_OUT:LOC,CHAN_OUT:LOC,CHAN_IN,
         CHAN_OUT:LOC,CHAN_IN:TAG:RESULT> "
;
```

where

LOC = the DS3SW circuit pack location identified in Step 12, specified as DS3SW-{1 through 4}-{1 through 16}

RESULT = the test results; NULL means that the test could not be run at the time it was requested, PASS means the specified path is fault-free, FAIL means the associated path is failed

Do one of the following:

- If the system responds with NULL, continue this procedure at Step 19.
- If the system responds with PASS, continue this procedure at Step 20.
- If the system responds with FAIL, continue this procedure at Step 21.

19. Having received a NULL response, check to see that *all* the statements that follow are true:

    a. The input and output unit controllers, associated with the DS3OUT circuit pack identified in Step 1, are in the in-service (IS) state.

    b. The protection switch circuit packs within the input unit, associated with the DS3OUT circuit pack identified in Step 1, are in the in-service (IS) state.

    c. The circuit packs along the failed path, associated with the DS3OUT circuit pack identified in Step 1, are present and provisioned and have no active failure conditions other than the PAINTGRT condition.

    d. The input port, associated with the DS3OUT circuit pack identified in Step 1, has a valid incoming DS3 signal present.

    Do one of the following:

    - If this is the first time you received the NULL response and all of the previous statements are *true*, you have a problem that needs to be reported to your system administrator or next level of technical support.
    - If this is the first time you received the NULL response and any or all of the previous statements are *false*, correct the situation(s) and repeat Step 18 from the beginning.
    - If this is the second time you have executed Step 18 and received the NULL response, stop here and call your system administrator or the next level of technical support.

20. Having received the PASS response, perform the following steps:

    a. Check the craft interface terminal for one of the following autonomous messages:

       — For *Message Set 1*:

```
  <TID #n YY-MM-DD HH:MM:SS>
A <ASEQ> REPT SW EQPT
   /* WORKING ENTITY,SWITCH DIRECTION */
   " <WORKING ENTITY>,WKG "
;
```

       — For *Message Set 2*:

```
  <TID YY-MM-DD HH:MM:SS>
A <ASEQ> REPT SW EQPT
   " <WORKING ENTITY>,WKG "
;
```

       where

       WORKING ENTITY = the DS3OUT circuit pack identified in Step 1

    b. Verify that the DS3OUT circuit pack identified in Step 1 no longer generates an alarm, by entering the two commands that follow:

       RTRV-ALM-EQPT::ALL::,PAINTGRT;

       and

       RTRV-PATH-T3::ALL::PAINTGRT;

       In both system responses, the DS3OUT circuit pack identified in Step 1 should *not* appear in the message and the red LED should no longer be lighted.

    c. At the craft interface terminal, switch the DS3SW to a working state by entering:

       ALW-SW-EQPT::ELOC::WKG;

       where

       ELOC = the DS3SW circuit pack location identified in Step 12, specified by DS3SW-{1 through 4}-{1 through 16}

    d. Verify a successful switch to working of the DS3SW circuit pack identified in Step 12 by entering:

       RTRV-STATE-EQPT::ELOC;

       where

       ELOC = the DS3SW circuit pack

The system output should be one of the following messages:

— For *Message Set 1*:

```
  <TID #n YY-MM-DD HH:MM:SS>
M  RTRV STATE EQPT::<ELOC>::ALL COMPLD
   /* LOC:STATE */
   " <LOC>:ACT "
;
```

— For *Message Set 2*:

```
  <TID YY-MM-DD HH:MM:SS>
M  RTRV STATE EQPT::<ELOC>::ALL COMPLD
   " <LOC>:ACT "
;
```

where

LOC = the DS3SW circuit pack identified in Step 12

- If the system shows the DS3SW circuit pack identified in Step 12 is active (ACT), continue this procedure at Step 20e.
- If the system responds with any other state, stop here and call your system administrator or the next level of technical support.

e. Using standard office procedures, label and record the DS3SW circuit pack, set aside in Step 16, as failed and in need of repair. If you need instructions for returning a failed circuit pack, see Procedure 3-11, "Returning Circuit Packs for Repair."

f. Since the original DS3OUT circuit pack is not at fault, it can be put in the spares storage cabinet for future use.

g. You have successfully corrected the problem. If more alarms exist on the frame, return to Procedure 9-1, "How to Clear Alarms," to determine the next corrective action to take.

Checking the Cables

21. Having received the FAIL response, identify the failed cable by entering:

    RTRV-CABLE-T3::ALL::PAINTGRT;

    The system responds with one of the following messages:

    — For *Message Set 1*:

    ```
      <TID #n YY-MM-DD HH:MM:SS>
    M  RTRV CABLE T3::::PAINTGRT COMPLD
       /* DS3IN,CABLE,PIN #:DS3SW_IN,CABLE,PIN #:
             DS3SW_OUT,CABLE,PIN #:DS3OUT,CABLE,PIN #
    */
       " <DS3IN,CABLE,PIN #:DS3SW_IN,CABLE,PIN #:
             DS3SW_OUT,CABLE,PIN #:DS3OUT,CABLE,PIN
    #> "
    ;
    ```

    — For *Message Set 2*:

    ```
      <TID YY-MM-DD HH:MM:SS>
    M RTRV CABLE T3::::PAINTGRT COMPLD
    " <DS3IN,CABLE,PIN #:DS3SW_IN,CABLE,PIN #:
          DS3SW_OUT,CABLE,PIN #:DS3OUT,CABLE,PIN #> "
    ;
    ```

    Be certain to note the cable that is associated with the DS3OUT circuit pack identified in Step 1. The numbers in the CABLE field, those starting with J, correlate to the numbers on the octopus cable connectors attached to the backplane. The suspected cable segment will be that segment between the DS3 switch (DS3SW) module and the DS3 output interface (DS3OUT INTFC) module.

22. Make sure you have written down the cable's location for future use.

23. Wearing an ESD wrist strap, remove the backplane covers. Using the cable identification from Step 22, visually examine, at both ends, the cable that runs between the DS3SW module and the DS3OUT module.

24. Visually verify that the cable is correctly plugged in and that there are no offset, misaligned, or cocked connectors.

    - If you observe any of the above problems, continue this procedure at Step 25.
    - If you do *not* observe any problems with the cable, continue this procedure at Step 29.

25. Rectify the problem observed with the cable identified in Step 22.

26. At the craft interface terminal, check to see if the previous steps have cleared the problem by entering:

    TEST-PATH-T3::::PAINTGRT;

    The system responds with one of the following messages:

    — For *Message Set 1*:

    ```
      <TID #n YY-MM-DD HH:MM:SS>
    M  TEST PATH T3:::PAINTGRT COMPLD
       /* DS3_IN,DS3_OUT:LOC,CHAN_OUT:LOC,CHAN_IN,
             CHAN_OUT:LOC,CHAN_IN:TAG:RESULT */
       " <DS3_IN,DS3_OUT:LOC,CHAN_OUT:LOC,CHAN_IN,
             CHAN_OUT:LOC,CHAN_IN:TAG:RESULT> "
    ;
    ```

    — For *Message Set 2*:

    ```
      <TID YY-MM-DD HH:MM:SS>
    M  TEST PATH T3:::PAINTGRT COMPLD
       " <DS3_IN,DS3_OUT:LOC,CHAN_OUT:LOC,CHAN_IN,
             CHAN_OUT:LOC,CHAN_IN:TAG:RESULT> "
    ;
    ```

    where

    LOC = the DS3OUT circuit pack location

    RESULT = the test results; NULL means that the test could not be run at the time it was requested, PASS means the specified path is fault-free, FAIL means the associated path is failed

    Do one of the following:

    - If the system responds with NULL, continue this procedure at Step 27.
    - If the system responds with PASS, continue this procedure at Step 28.
    - If the system responds with FAIL, continue this procedure at Step 29.

27. Having received a NULL response, check to see that *all* the statements that follow are true:

    a. The input and output unit controllers, associated with the DS3OUT circuit pack identified in Step 1, are in the in-service (IS) state.

    b. The protection switch circuit packs within the input unit, associated with the DS3OUT circuit pack identified in Step 1, are in the in-service (IS) state.

    c. The circuit packs along the failed path, associated with the DS3OUT circuit pack identified in Step 1, are present and provisioned and have no active failure conditions other than the PAINTGRT condition.

d. The input port, associated with the DS3OUT circuit pack identified in Step 1, has a valid incoming DS3 signal present.

Do one of the following

- If this is the first time you received the NULL response and all of the previous statements are *true*, you have a problem that needs to be reported to your system administrator or next level of technical support.
- If this is the first time you received the NULL response and any or all of the previous statements are *false*, correct the situation(s) and repeat Step 26 from the beginning.
- If this is the second time you have executed Step 26 and received the NULL response, stop here and call your system administrator or the next level of technical support.

28. Having received the PASS response, perform the following steps:

a. Check the craft interface terminal for one of the following autonomous messages:

— For *Message Set 1*:

```
  <TID #n YY-MM-DD HH:MM:SS>
A <ASEQ> REPT SW EQPT
    /* WORKING ENTITY,SWITCH DIRECTION */
    " <WORKING ENTITY>,WKG "
;
```

— For *Message Set 2*:

```
  <TID YY-MM-DD HH:MM:SS>
A <ASEQ> REPT SW EQPT
    " <WORKING ENTITY>,WKG "
;
```

where

WORKING ENTITY = the DS3OUT circuit pack identified in Step 1

b. Verify that the DS3OUT circuit pack identified in Step 1 no longer generates an alarm, by entering the two commands that follow:

RTRV-ALM-EQPT::ALL::,PAINTGRT;

and

RTRV-PATH-T3::ALL::PAINTGRT;

In both system responses, the DS3OUT circuit pack identified in Step 1 should *not* appear in the message and the red LED should no longer be lighted.

c. At the craft interface terminal, switch the DS3SW to a working state by entering:

ALW-SW-EQPT::ELOC::WKG;

where

ELOC = the DS3SW circuit pack identified in Step 12, specified as DS3SW-{1 through 4}-{1 through 16}

d. Verify a successful switch to working of the DS3SW circuit pack by entering:

RTRV-STATE-EQPT::ELOC;

where

ELOC = the DS3SW circuit pack identified in Step 12

The system response should be one of the following messages:

— For *Message Set 1*:

```
  <TID #n YY-MM-DD HH:MM:SS>
M  RTRV STATE EQPT::<ELOC>::ALL COMPLD
   /* LOC:STATE */
   " <LOC>:ACT "
;
```

— For *Message Set 2*:

```
  <TID YY-MM-DD HH:MM:SS>
M  RTRV STATE EQPT::<ELOC>::ALL COMPLD
   " <LOC>:ACT "
;
```

where

LOC = the DS3SW circuit pack identified in Step 12

e. Since the original DS3OUT and DS3SW circuit packs are not at fault, they can be put in the spares storage cabinet for future use.

f. Wearing an ESD wrist strap, reattach the backplane covers.

g. You have successfully corrected the problem. If more alarms exist on the frame, return to Procedure 9-1, "How to Clear Alarms," to determine the next corrective action to take.

29. Having arrived at this step because you did *not* observe cable problems in Step 24 or because you received the FAIL response in Step 26, call your system administrator or the next level of technical support to fix the cable. Note the number of this procedure and the number of the next step so that you can return to the correct location once the failed cable is repaired.

30. After the failed cable has been repaired by your system administrator or the next level of technical support, continue this procedure at Step 31.

31. At the craft interface terminal, verify that the problem has been corrected by entering:

    TEST-PATH-T3::::PAINTGRT;

    The system responds with one of the following messages:

    — For *Message Set 1*:

```
  <TID #n YY-MM-DD HH:MM:SS>
M  TEST PATH T3::::PAINTGRT COMPLD
   /* DS3_IN,DS3_OUT:LOC,CHAN_OUT:LOC,CHAN_IN,
         CHAN_OUT:LOC,CHAN_IN:TAG:RESULT */
   " <DS3_IN,DS3_OUT:LOC,CHAN_OUT:LOC,CHAN_IN,
         CHAN_OUT:LOC,CHAN_IN:TAG:>PASS "
;
```

    — For *Message Set 2*:

```
  <TID YY-MM-DD HH:MM:SS>
M  TEST PATH T3::::PAINTGRT COMPLD
   " <DS3_IN,DS3_OUT:LOC,CHAN_OUT:LOC,CHAN_IN,
         CHAN_OUT:LOC,CHAN_IN:TAG:>PASS "
;
```

32. Verify that the system output is PASS. Having received the PASS response, perform the following steps:

    a. Check the craft interface terminal for one of the following autonomous messages:

    — For *Message Set 1*:

```
    <TID #n YY-MM-DD HH:MM:SS>
A <ASEQ> REPT SW EQPT
    /* WORKING ENTITY,SWITCH DIRECTION */
    " <WORKING ENTITY>,WKG "
;
```

    — For *Message Set 2*:

```
    <TID YY-MM-DD HH:MM:SS>
A <ASEQ> REPT SW EQPT
    " <WORKING ENTITY>,WKG "
;
```

    where

    WORKING ENTITY = the DS3OUT circuit pack identified in Step 1

b. Verify that the DS3OUT circuit pack identified in Step 1 no longer generates an alarm, by entering the two commands that follow:

RTRV-ALM-EQPT::ALL::,PAINTGRT;

and

RTRV-PATH-T3::ALL::PAINTGRT;

In both system responses, the DS3OUT circuit pack identified in Step 1 should *not* appear in the message and the red LED should no longer be lighted.

c. At the craft interface terminal, switch the DS3SW to a working state by entering:

ALW-SW-EQPT::ELOC::WKG;

where

ELOC = the DS3SW circuit pack identified in Step 12, specified as DS3SW-{1 through 4}-{1 through 16}

d. Verify a successful switch to working of the DS3SW circuit pack by entering:

RTRV-STATE-EQPT::ELOC;

where

ELOC = the DS3SW circuit pack identified in Step 12

The system response should be one of the following messages:

— For *Message Set 1*:

```
  <TID #n YY-MM-DD HH:MM:SS>
M  RTRV STATE EQPT::<ELOC>::ALL COMPLD
   /* LOC:STATE */
   " <LOC>:ACT "
;
```

— For *Message Set 2*:

```
  <TID YY-MM-DD HH:MM:SS>
M  RTRV STATE EQPT::<ELOC>::ALL COMPLD
   " <LOC>:ACT "
;
```

where

LOC = the DS3SW circuit pack identified in Step 12

e. Since the original DS3OUT and DS3SW circuit packs are not at fault, they can be put in the spares storage cabinet for future use.

f. Wearing an ESD wrist strap, reattach the backplane covers.

g. You have successfully corrected the problem. If more alarms exist on the frame, return to Procedure 9-1, "How to Clear Alarms," to determine the next corrective action to take.

Procedure 11-4. DS3IN:MN,PAINTGRT and DS3SW:MN,PAINTGRT Alarms with No Other DS3IN or DS3SW Circuit Packs Showing PAINTGRT

Please note that there are two sections within Procedure 11-4; each section represents one possible source of the PAINTGRT condition:

- Checking the DS3SW Circuit Pack
- Checking the Cables

Sometimes you will use the steps in both sections to clear the PAINTGRT condition; other times only the first or second sections will be needed. *However, regardless of the number of sections you use, the steps must be executed in the order presented.*

CAUTION:
Electrostatic discharge (ESD) damage.
ESD can cause damage to the components of a DACS III-2000 system. Wear an ESD wrist strap when working around the frame.

Checking the DS3SW Circuit Pack

1. Have the system output from Procedure 11-1, in which you identified the affected DS3IN and DS3SW circuit packs, available for referencing.

WARNING:
Potential for service disruption.
Only one DS3IN and DS3SW circuit pack, and no other types of circuit packs, should have an active PAINTGRT condition. If more than these two packs show PAINTGRT, do NOT execute this procedure. Return to Table 11-1, "PAINTGRT Decision Tree," check the "Additional Conditions" column, and select the appropriate procedure.

2. Obtain a spare DS3SW (AWL1 or AYJ1) circuit pack.
   - If a spare circuit pack is not available, stop here and call your system administrator or the next level of technical support.
   - If a spare circuit pack is available, continue this procedure at Step 3.
3. At the craft interface terminal, verify that the DS3SW circuit pack is in the out-of-service fault (`OOS-FLT`) state by entering:

```
RTRV-STATE-EQPT::ELOC::ALL;
```

where

ELOC = the DS3SW circuit pack identified in Step 1, specified as DS3SW-{1 through 4}-{1 through 16}

The system should respond with one of the following messages:

— For *Message Set 1*:

```
  <TID #n YY-MM-DD HH:MM:SS>
M  RTRV STATE EQPT::<ELOC>::ALL COMPLD
   /* LOC:STATE */
   " DS3SW-<unit-slot>:OOS-FLT "
;
```

— For *Message Set 2*:

```
  <TID YY-MM-DD HH:MM:SS>
M  RTRV STATE EQPT::<ELOC>::ALL COMPLD
   " DS3SW-<unit-slot>:OOS-FLT "
;
```

- If the system shows the DS3SW circuit pack is out-of-service fault (OOS-FLT), continue this procedure at Step 4.
- If the system responds with any other state, stop here and call your system administrator or the next level of technical support.

4. At the craft interface terminal, verify that the protection circuit pack, related to the DS3SW circuit pack identified in Step 1, is in the active (ACT) state by entering:

RTRV-STATE-EQPT::ELOC::ALL;

where

ELOC = the protection packs; identified as DS3SW-1-16 for a 1024-size system; DS3SW-4-15&-16 for a 2048-size system

The system should respond with one of the following messages:

— For *Message Set 1*:

```
  <TID #n YY-MM-DD HH:MM:SS>
M RTRV STATE EQPT::<ELOC>::ALL COMPLD
   /* LOC:STATE */
   " DS3SW-<unit-slot>:ACT"
;
```

— For *Message Set 2*:

```
  <TID YY-MM-DD HH:MM:SS>
M  RTRV STATE EQPT::<ELOC>::ALL COMPLD
   " DS3SW-<unit-slot>:ACT"
;
```

- If the system shows the protection circuit pack is active (ACT), continue this procedure at Step 5.
- If the system responds with any other state, stop here and call your system administrator or the next level of technical support.

5. Go to the DACS III-2000 frame and remove the DS3SW circuit pack that was identified in Step 1.
   - If you are working on a 1024-size frame and need detailed instructions, see Procedure 3-2, "Removing Circuit Packs."
   - If you are working on a 2048-size frame and need detailed instructions, see Procedure 3-4, "Removing DS3SWL CTR Circuit Packs."
6. Using standard office procedures, write down the
   - — serial number of the removed DS3SW circuit pack
   - — the slot from which it was removed Set aside the removed DS3SW circuit pack until the procedure instructs you to do something with it.
7. Insert the spare DS3SW circuit pack into the empty slot.
   - If you are working on a 1024-size frame and need detailed instructions, see Procedure 3-1, "Installing Circuit Packs."
   - If you are working on a 2048-size frame and need detailed instructions, see Procedure 3-3, "Installing DS3SWL CTR Circuit Packs."
8. At the craft interface terminal, check to see if the previous steps have cleared the problem by entering:

   TEST-PATH-T3::::PAINTGRT;

   The system responds with one of the following messages:

   — For *Message Set 1*:

```
  <TID #n YY-MM-DD HH:MM:SS>
M  TEST PATH T3::::PAINTGRT COMPLD
   /* DS3_IN,DS3_OUT:LOC,CHAN_OUT:LOC,CHAN_IN,
         CHAN_OUT:LOC,CHAN_IN:TAG:RESULT */
   " <DS3_IN,DS3_OUT:LOC,CHAN_OUT:LOC,CHAN_IN,
         CHAN_OUT:LOC,CHAN_IN:TAG:RESULT> "
;
```

   — For *Message Set 2*:

```
  <TID YY-MM-DD HH:MM:SS>
M  TEST PATH T3::::PAINTGRT COMPLD
   " <DS3_IN,DS3_OUT:LOC,CHAN_OUT:LOC,CHAN_IN,
         CHAN_OUT:LOC,CHAN_IN:TAG:RESULT> "
;
```

where

LOC = the DS3SW circuit pack location identified in Step 1, specified as DS3SW-{1 through 4}-{1 through 16}

RESULT = the test results; NULL means that the test could not be run at the time it was requested, PASS means the specified path is fault-free, FAIL means the associated path is failed

Do one of the following:

- If the system responds with NULL, continue this procedure at Step 9.
- If the system responds with PASS, continue this procedure at Step 10.
- If the system responds with FAIL, continue this procedure at Step 11.

9. Having received a NULL response, check to see that *all* the statements that follow are true:

   a. The input and output unit controllers, associated with the DS3IN circuit pack identified in Step 1, are in the in-service (IS) state.

   b. The protection switch circuit packs within the input unit, associated with the DS3IN circuit pack identified in Step 1, are in the in-service (IS) state.

   c. The circuit packs along the failed path, associated with the DS3IN circuit pack identified in Step 1, are present and provisioned and have no active failure conditions other than the PAINTGRT condition.

   d. The input port, associated with the DS3IN circuit pack identified in Step 1, has a valid incoming DS3 signal present.

   Do one of the following:

   - If this is the first time you received the NULL response and all of the previous statements are *true*, you have a problem that needs to be reported to your system administrator or next level of technical support.
   - If this is the first time you received the NULL response and any or all of the previous statements are *false*, correct the situation(s) and repeat Step 8 from the beginning.
   - If this is the second time you've executed Step 8 and received the NULL response, stop here and call your system administrator or the next level of technical support.

10. Having received the PASS response, perform the following steps:

a. Check the craft interface terminal for the two autonomous messages that follow:

— first message—*Message Set 1*:

```
  <TID #n YY-MM-DD HH:MM:SS>
A <ASEQ> REPT SW EQPT
    /* WORKING ENTITY,SWITCH DIRECTION */
    " <WORKING ENTITY>,WKG "
;
```

— first message—*Message Set 2*:

```
  <TID YY-MM-DD HH:MM:SS>
A <ASEQ> REPT SW EQPT
    " <WORKING ENTITY>,WKG "
;
```

where

`WORKING ENTITY` = the DS3IN circuit pack identified in Step 1

— second message—*Message Set 1*:

```
  <TID #n YY-MM-DD HH:MM:SS>
A <ASEQ> REPT SW EQPT
    /* WORKING ENTITY,SWITCH DIRECTION */
    " <WORKING ENTITY>,WKG "
;
```

— second message—*Message Set 2*:

```
  <TID YY-MM-DD HH:MM:SS>
A <ASEQ> REPT SW EQPT
    " <WORKING ENTITY>,WKG "
;
```

where

`WORKING ENTITY` = the DS3SW circuit pack identified in Step 1

b. Verify that the DS3IN and DS3SW circuit packs identified in Step 1 no longer generate alarms by entering the two commands that follow:

`RTRV-ALM-EQPT::ALL::,PAINTGRT;`

and

`RTRV-PATH-T3::ALL::PAINTGRT;`

In both system responses, the DS3IN and DS3SW circuit packs identified in Step 1 should *not* appear in the message and the red LEDs should no longer be lighted.

c. Using standard office procedures, label and record the DS3SW circuit pack, set aside in Step 6, as failed and in need of repair. If you need instructions for returning a failed circuit pack, see Procedure 3-11, "Returning Circuit Packs for Repair."

d. You have successfully corrected the problem. If more alarms exist on the frame, return to Procedure 9-1, "How to Clear Alarms," to determine the next corrective action to take.

Checking the Cables

11. Having received the FAIL response, identify the failed cable by entering:

```
RTRV-CABLE-T3::ALL::PAINTGRT;
```

The system responds with one of the following messages:

— For *Message Set 1*:

```
  <TID #n YY-MM-DD HH:MM:SS>
M  RTRV CABLE T3::::PAINTGRT COMPLD
   /* DS3IN,CABLE,PIN #:DS3SW_IN,CABLE,PIN #:
         DS3SW_OUT,CABLE,PIN #:DS3OUT,CABLE,PIN #
*/
   " <DS3IN,CABLE,PIN #:DS3SW_IN,CABLE,PIN #:
         DS3SW_OUT,CABLE,PIN #:DS3OUT,CABLE,PIN
#> "
;
```

— For *Message Set 2*:

```
  <TID YY-MM-DD HH:MM:SS>
M  RTRV CABLE T3::::PAINTGRT COMPLD
   " <DS3IN,CABLE,PIN #:DS3SW_IN,CABLE,PIN #:
         DS3SW_OUT,CABLE,PIN #:DS3OUT,CABLE,PIN
#> "
;
```

Be certain to note the cable that is associated with the DS3IN circuit pack identified in Step 1. The numbers in the CABLE field, those starting with J, correlate to the numbers on the octopus cable connectors attached to the backplane. The suspected cable segment will be that segment between the DS3 input interface (DS3IN INTFC) module and the DS3 switch (DS3SW) module.

12. Make sure you have written down the cable's location for future use.

13. Wearing an ESD wrist strap, remove the backplane covers. Using the cable identification from Step 12, visually examine, at both ends, the cable that runs between the DS3IN module and the DS3SW module.

14. Visually verify that the cable is correctly plugged in and that there are no offset, misaligned, or cocked connectors.
    - If you observe any of the above problems, continue this procedure at Step 15.
    - If you do *not* observe any problems with the cable, continue this procedure at Step 19.
15. Rectify the problem observed with the cable identified in Step 12.
16. At the craft interface terminal, check to see if the previous steps have cleared the problem by entering:

    TEST-PATH-T3::::PAINTGRT;

    The system responds with one of the following messages:

    — For *Message Set 1*:

```
  <TID #n YY-MM-DD HH:MM:SS>
M  TEST PATH T3:::PAINTGRT COMPLD
   /* DS3_IN,DS3_OUT:LOC,CHAN_OUT:LOC,CHAN_IN,
          CHAN_OUT:LOC,CHAN_IN:TAG:RESULT */
   " <DS3_IN,DS3_OUT:LOC,CHAN_OUT:LOC,CHAN_IN,
          CHAN_OUT:LOC,CHAN_IN:TAG:RESULT> "
;
```

    — For *Message Set 2*:

```
  <TID YY-MM-DD HH:MM:SS>
M  TEST PATH T3:::PAINTGRT COMPLD
   " <DS3_IN,DS3_OUT:LOC,CHAN_OUT:LOC,CHAN_IN,
          CHAN_OUT:LOC,CHAN_IN:TAG:RESULT> "
;
```

    where

    LOC = the DS3SW circuit pack location

    RESULT = the test results; NULL means that the test could not be run at the time it was requested, PASS means the specified path is fault-free, FAIL means the associated path is failed

    Do one of the following:

    - If the system responds with NULL, continue this procedure at Step 17.
    - If the system responds with PASS, continue this procedure at Step 18.
    - If the system responds with FAIL, continue this procedure at Step 19.

17. Having received a NULL response, check to see that *all* the statements that follow are true:

    a. The input and output unit controllers, associated with the DS3IN circuit pack identified in Step 1, are in the in-service (IS) state.

    b. The protection switch circuit packs within the input unit, associated with the DS3IN circuit pack identified in Step 1, are in the in-service (IS) state.

    c. The circuit packs along the failed path, associated with the DS3IN circuit pack identified in Step 1, are present and provisioned and have no active failure conditions other than the PAINTGRT condition.

    d. The input port, associated with the DS3IN circuit pack identified in Step 1, has a valid incoming DS3 signal present.

    Do one of the following:

    - If this is the first time you received the NULL response and all of the previous statements are *true*, you have a problem that needs to be reported to your system administrator or next level of technical support.
    - If this is the first time you received the NULL response and any or all of the previous statements are *false*, correct the situation(s) and repeat Step 16 from the beginning.
    - If this is the second time you have executed Step 16 and received the NULL response, stop here and call your system administrator or the next level of technical support.

18. Having received the PASS response, perform the following steps:

    a. Check the craft interface terminal for the two autonomous messages that follow:

    — first message—*Message Set 1*:

```
  <TID #n YY-MM-DD HH:MM:SS>
A <ASEQ> REPT SW EQPT
    /* WORKING ENTITY,SWITCH DIRECTION */
    " <WORKING ENTITY>,WKG "
;
```

    — first message—*Message Set 2*:

```
  <TID YY-MM-DD HH:MM:SS>
A <ASEQ> REPT SW EQPT
    " <WORKING ENTITY>,WKG "
;
```

    where

    WORKING ENTITY = the DS3IN circuit pack identified in Step 1

— second message—*Message Set 1*:

```
  <TID #n YY-MM-DD HH:MM:SS>
A <ASEQ> REPT SW EQPT
   /* WORKING ENTITY,SWITCH DIRECTION */
   " <WORKING ENTITY>,WKG "
;
```

— second message—*Message Set 2*:

```
  <TID YY-MM-DD HH:MM:SS>
A <ASEQ> REPT SW EQPT
   " <WORKING ENTITY>,WKG "
;
```

where

WORKING ENTITY = the DS3SW circuit pack identified in Step 1

b. Verify that the DS3IN and DS3SW circuit packs identified in Step 1 no longer generate alarms by entering the two commands that follow:

RTRV-ALM-EQPT::ALL::,PAINTGRT;

and

RTRV-PATH-T3::ALL::PAINTGRT;

In both system responses, the DS3IN and DS3SW circuit packs identified in Step 1 should *not* appear in the message and the red LEDs should no longer be lighted.

c. Since the original DS3SW circuit pack is not at fault, it can be put in the spares storage cabinet for future use.

d. Wearing an ESD wrist strap, reattach the backplane covers.

e. You have successfully corrected the problem. If more alarms exist on the frame, return to Procedure 9-1, "How to Clear Alarms," to determine the next corrective action to take.

19. Having arrived at this step because you did *not* observe cable problems in Step 14 or because you received the FAIL response in Step 16, call your system administrator or the next level of technical support to fix the cable. Note the number of this procedure and the number of the next step so that you can return to the correct location once the failed cable is repaired.

20. After the failed cable has been repaired by your system administrator or the next level of technical support, continue this procedure at Step 21.

21. At the craft interface terminal, verify that the problem has been corrected by entering:

    TEST-PATH-T3::::PAINTGRT;

    The system responds with one of the following messages:

    — For *Message Set 1*:

```
  <TID #n YY-MM-DD HH:MM:SS>
M  TEST PATH T3::::PAINTGRT COMPLD
   /* DS3_IN,DS3_OUT:LOC,CHAN_OUT:LOC,CHAN_IN,
         CHAN_OUT:LOC,CHAN_IN:TAG:RESULT */
   " <DS3_IN,DS3_OUT:LOC,CHAN_OUT:LOC,CHAN_IN,
         CHAN_OUT:LOC,CHAN_IN:TAG:>PASS "
;
```

    — For *Message Set 2*:

```
  <TID YY-MM-DD HH:MM:SS>
M  TEST PATH T3::::PAINTGRT COMPLD
   " <DS3_IN,DS3_OUT:LOC,CHAN_OUT:LOC,CHAN_IN,
         CHAN_OUT:LOC,CHAN_IN:TAG:>PASS "
;
```

22. Verify that the system output is PASS. Having received the PASS response, perform the following steps:

    a. Check the craft interface terminal for the two autonomous messages that follow:

    — first message—*Message Set 1*

```
      <TID #n YY-MM-DD HH:MM:SS>
    A <ASEQ> REPT SW EQPT
       /* WORKING ENTITY,SWITCH DIRECTION */
       " <WORKING ENTITY>,WKG "
    ;
```

    — first message—*Message Set 2*:

```
      <TID YY-MM-DD HH:MM:SS>
    A <ASEQ> REPT SW EQPT
       " <WORKING ENTITY>,WKG "
    ;
```

    where

    WORKING ENTITY = the DS3IN circuit pack identified in Step 1

— second message—*Message Set 1*

```
  <TID #n YY-MM-DD HH:MM:SS>
A <ASEQ> REPT SW EQPT
   /* WORKING ENTITY,SWITCH DIRECTION */
   " <WORKING ENTITY>,WKG "
;
```

— second message—*Message Set 2*:

```
  <TID YY-MM-DD HH:MM:SS>
A <ASEQ> REPT SW EQPT
   " <WORKING ENTITY>,WKG "
;
```

where

`WORKING ENTITY` = the DS3SW circuit pack identified in Step 1

b. Verify that the DS3IN and DS3SW circuit packs identified in Step 1 no longer generate alarms by entering the two commands that follow:

`RTRV-ALM-EQPT::ALL::,PAINTGRT`;

and

`RTRV-PATH-T3::ALL::PAINTGRT`;

In both system responses, the DS3IN and DS3SW circuit packs identified in Step 1 should *not* appear in the message and the red LEDs should no longer be lighted.

c. Since the original DS3SW circuit pack is not at fault, it can be put in the spares storage cabinet for future use.

d. Wearing an ESD wrist strap, reattach the backplane covers.

e. You have successfully corrected the problem. If more alarms exist on the frame, return to Procedure 9-1, "How to Clear Alarms," to determine the next corrective action to take.

Procedure 11-5. DS3IN:MJ,PAINTGRT and DS3SW:MN,PAINTGRT Alarms with No Other DS3IN or DS3SW Circuit Packs Showing PAINTGRT

Please note that there are three sections within Procedure 11-5; each section represents one possible source of the PAINTGRT condition:

- Checking the DS3IN Circuit Pack
- Checking the DS3SW Circuit Pack
- Checking the Cables

Sometimes you will use the steps in all three sections to clear the PAINTGRT condition; other times only the first, or first and second, sections will be needed. *However, regardless of the number of sections you use, the steps must be executed in the order presented.*

CAUTION:
Electrostatic discharge (ESD) damage.
ESD can cause damage to the components of a DACS III-2000 system. Wear an ESD wrist strap when working around the frame.

Checking the DS3IN Circuit Pack

1. Have the system output from Procedure 11-1, in which you identified the affected DS3IN and DS3SW circuit packs, available for referencing.

   If all non-PAINTGRT equipment alarms have been cleared as instructed in Procedure 9-1, then the affected DS3IN circuit pack will be a protection pack (that is, P1/P2).

WARNING:
Potential for service disruption.
Only one DS3IN and one DS3SW circuit pack, and no other types of circuit packs, should have an active PAINTGRT condition. If more than these two circuit packs show PAINTGRT, do NOT execute this procedure. Return to Table 11-1, "PAINTGRT Decision Tree," check the "Additional Conditions" column, and select the appropriate procedure.

2. Obtain a spare DS3IN protection circuit pack (ARW6).
   - If a spare circuit pack is not available, stop here and call your system administrator or the next level of technical support.
   - If a spare circuit pack is available, continue this procedure at Step 3.

3. At the craft interface terminal, verify that the DS3IN-P1/P2 circuit pack is in the out-of-service fault (OOS-FLT) state by entering:

   RTRV-STATE-EQPT::ELOC::ALL;

   where

   ELOC = the DS3IN circuit pack identified in Step 1,specified as DS3IN-{1 through 8}-{P1/P2}

   The system should respond with one of the following messages:

   — For *Message Set 1*:

   ```
     <TID #n YY-MM-DD HH:MM:SS>
   M  RTRV STATE EQPT::<ELOC>::ALL COMPLD
      /* LOC:STATE */
      " DS3IN-<unit-slot>:OOS-FLT "
   ;
   ```

   — For *Message Set 2*:

   ```
     <TID YY-MM-DD HH:MM:SS>
   M  RTRV STATE EQPT::<ELOC>::ALL COMPLD
      " DS3IN-<unit-slot>:OOS-FLT "
   ;
   ```

   - If the system shows the DS3IN circuit pack is out-of-service fault (OOS-FLT), continue this procedure at Step 4.
   - If the system responds with any other state, stop here and call your system administrator or the next level of technical support.

4. Go to the DACS III-2000 frame and remove the DS3IN circuit pack that was identified in Step 1. If you need detailed instructions, see Procedure 3-2, "Removing Circuit Packs."

5. Using standard office procedures, write down the

   — serial number of the removed DS3IN circuit pack

   — unit and slot from which it was removed. Set aside the removed DS3IN circuit pack until the procedure instructs you to do something with it.

6. Insert the spare DS3IN circuit pack into the empty slot. If you need detailed instructions, see Procedure 3-1, "Installing Circuit Packs."

7. At the craft interface terminal, check to see if the previous steps have cleared the problem by entering:

   TEST-PATH-T3:::PAINTGRT;

   The system responds with one of the following messages:

— For *Message Set 1*:

```
  <TID #n YY-MM-DD HH:MM:SS>
M  TEST PATH T3::::PAINTGRT COMPLD
   /* DS3_IN,DS3_OUT:LOC,CHAN_OUT:LOC,CHAN_IN,
         CHAN_OUT:LOC,CHAN_IN:TAG:RESULT */
   " <DS3_IN,DS3_OUT:LOC,CHAN_OUT:LOC,CHAN_IN,
         CHAN_OUT:LOC,CHAN_IN:TAG:RESULT> "
;
```

— For *Message Set 2*:

```
  <TID YY-MM-DD HH:MM:SS>
M  TEST PATH T3::::PAINTGRT COMPLD
   " <DS3_IN,DS3_OUT:LOC,CHAN_OUT:LOC,CHAN_IN,
         CHAN_OUT:LOC,CHAN_IN:TAG:RESULT> "
;
```

where

`LOC` = the DS3IN circuit pack location

`RESULT` = the test results; `NULL` means that the test could not be run at the time it was requested, `PASS` means the specified path is fault-free, `FAIL` means the associated path is failed

Do one of the following:

- If the system responds with `NULL`, continue this procedure at Step 8.
- If the system responds with `PASS`, continue this procedure at Step 9.
- If the system responds with `FAIL`, continue this procedure at Step 10.

8. Having received a `NULL` response, check to see that *all* the statements that follow are true:

   a. The input and output unit controllers, associated with the DS3IN circuit pack identified in Step 1, are in the in-service (`IS`) state.

   b. The protection switch circuit packs within the input unit, associated with the DS3IN circuit pack identified in Step 1, are in the in-service (`IS`) state.

   c. The circuit packs along the failed path, associated with the DS3IN circuit pack identified in Step 1, are present and provisioned and have no active failure conditions other than the PAINTGRT condition.

Do one of the following:

- If this is the first time you received the NULL response and all of the previous statements are *true*, you have a problem that needs to be reported to your system administrator or next level of technical support.
- If this is the first time you received the NULL response and any or all of the previous statements are *false*, correct the situation(s) and repeat Step 7 from the beginning.
- If this is the second time you've executed Step 7 and received the NULL response, stop here and call your system administrator or the next level of technical support.

9. Having received the PASS response, perform the following steps:

   a. Check the craft interface terminal for one of the following autonomous messages:

      — For *Message Set 1*:

```
  <TID #n YY-MM-DD HH:MM:SS>
A <ASEQ> REPT SW EQPT
    /* WORKING ENTITY,SWITCH DIRECTION */
    " <WORKING ENTITY>,WKG "
;
```

      — For *Message Set 2*:

```
  <TID YY-MM-DD HH:MM:SS>
A <ASEQ> REPT SW EQPT
    " <WORKING ENTITY>,WKG "
;
```

      where

      WORKING ENTITY = the DS3SW circuit pack identified in Step 1

   b. Verify that the DS3IN and DS3SW circuit packs identified in Step 1 no longer generate alarms by entering the two commands that follow:

      RTRV-ALM-EQPT::ALL::,PAINTGRT;

      and

      RTRV-PATH-T3::ALL::PAINTGRT;

      In both system responses, the DS3IN and DS3SW circuit packs identified in Step 1 should *not* appear in the message and the red LEDs should no longer be lighted.

   c. Verify a successful switch to working of the DS3SW circuit pack by entering:

      RTRV-STATE-EQPT::ELOC;

where

ELOC = the DS3SW circuit pack identified in Step 1

The system response should be one of the following messages:

— For *Message Set 1*:

```
  <TID #n YY-MM-DD HH:MM:SS>
M  RTRV STATE EQPT::<ELOC>::ALL COMPLD
   /* LOC:STATE */
   " <LOC>:ACT "
;
```

— For *Message Set 2*:

```
  <TID YY-MM-DD HH:MM:SS>
M  RTRV STATE EQPT::<ELOC>::ALL COMPLD
   " <LOC>:ACT "
;
```

where

LOC = the DS3SW circuit pack identified in Step 1

d. Using standard office procedures, label and record the DS3IN circuit pack, set aside in Step 5, as failed and in need of repair. If you need instructions for returning a failed circuit pack, see Procedure 3-11, "Returning Circuit Packs for Repair."

e. You have successfully corrected the problem. If more alarms exist on the frame, return to Procedure 9-1, "How to Clear Alarms," to determine the next corrective action to take.

Checking the DS3SW Circuit Pack

10. Obtain a spare DS3SW (AWL1 or AYJ1) circuit pack.

    - If a spare circuit pack is not available, stop here and call your system administrator or the next level of technical support.
    - If a spare circuit pack is available, continue this procedure at Step 11.

11. At the craft interface terminal, verify that the DS3SW circuit pack is in the out-of-service fault (OOS-FLT) state by entering:

    RTRV-STATE-EQPT::ELOC::ALL;

    where

    ELOC = the DS3SW circuit pack identified in Step 1, specified as DS3SW-{1 through 4}-{1 through 16}

    The system should respond with one of the following messages:

— For *Message Set 1*:

```
  <TID #n YY-MM-DD HH:MM:SS>
M  RTRV STATE EQPT::<ELOC>::ALL COMPLD
   /* LOC:STATE */
   " DS3SW-<unit-slot>:OOS-FLT "
;
```

— For *Message Set 2*:

```
  <TID YY-MM-DD HH:MM:SS>
M  RTRV STATE EQPT::<ELOC>::ALL COMPLD
   " DS3SW-<unit-slot>:OOS-FLT "
;
```

- If the system shows the DS3SW circuit pack is out-of-service fault (OOS-FLT), continue this procedure at Step 12.
- If the system responds with any other state, stop here and call your system administrator or the next level of technical support.

12. At the craft interface terminal, verify that the protection circuit pack, related to the DS3SW circuit pack identified in Step 1, is in the active (ACT) state by entering:

RTRV-STATE-EQPT::ELOC::ALL;

where

ELOC = the protection pack; identified as DS3SW-1-16 for a 1024-size system; DS3SW-4-15&-16 for a 2048-size system

The system should respond with one of the following messages:

— For *Message Set 1*:

```
  <TID #n YY-MM-DD HH:MM:SS>
M  RTRV STATE EQPT::<ELOC>::ALL COMPLD
   /* LOC:STATE */
   " DS3SW-<unit-slot>:ACT"
;
```

— For *Message Set 2*:

```
  <TID YY-MM-DD HH:MM:SS>
M  RTRV STATE EQPT::<ELOC>::ALL COMPLD
   " DS3SW-<unit-slot>:ACT"
;
```

- If the system shows the protection circuit pack is active (ACT), continue this procedure at Step 13.
- If the system responds with any other state, stop here and call your system administrator or the next level of technical support.

13. Go to the DACS III-2000 frame and remove the DS3SW circuit pack that was identified in Step 1.
    - If you are working on a 1024-size frame and need detailed instructions, see Procedure 3-2, "Removing Circuit Packs."
    - If you are working on a 2048-size frame and need detailed instructions, see Procedure 3-4, "Removing DS3SWL CTR Circuit Packs."
14. Using standard office procedures, write down the
    - — serial number of the removed DS3SW circuit pack
    - — the slot from which it was removed

    Set aside the removed DS3SW circuit pack until the procedure instructs you to do something with it.
15. Insert the spare DS3SW circuit pack into the empty slot.
    - If you are working on a 1024-size frame and need detailed instructions, see Procedure 3-1, "Installing Circuit Packs."
    - If you are working on a 2048-size frame and need detailed instructions, see Procedure 3-3, "Installing DS3SWL CTR Circuit Packs."
16. At the craft interface terminal, check to see if the previous steps have cleared the problem by entering:

    TEST-PATH-T3::::PAINTGRT;

    The system responds with one of the following messages:

    — For *Message Set 1*:

```
  <TID #n YY-MM-DD HH:MM:SS>
M  TEST PATH T3::::PAINTGRT COMPLD
   /* DS3_IN,DS3_OUT:LOC,CHAN_OUT:LOC,CHAN_IN,
         CHAN_OUT:LOC,CHAN_IN:TAG:RESULT */
   " <DS3_IN,DS3_OUT:LOC,CHAN_OUT:LOC,CHAN_IN,
         CHAN_OUT:LOC,CHAN_IN:TAG:RESULT> "
;
```

    — For *Message Set 2*:

```
  <TID YY-MM-DD HH:MM:SS>
M  TEST PATH T3::::PAINTGRT COMPLD
   " <DS3_IN,DS3_OUT:LOC,CHAN_OUT:LOC,CHAN_IN,
         CHAN_OUT:LOC,CHAN_IN:TAG:RESULT> "
;
```

where

LOC = the DS3SW circuit pack location identified in Step 1, specified as DS3SW-{1 through 4}-{1 through 16}

RESULT = the test results; NULL means that the test could not be run at the time it was requested, PASS means the specified path is fault-free, FAIL means the associated path is failed

Do one of the following:

- If the system responds with NULL, continue this procedure at Step 17.
- If the system responds with PASS, continue this procedure at Step 18.
- If the system responds with FAIL, continue this procedure at Step 19.

17. Having received a NULL response, check to see that *all* the statements that follow are true:

    a. The input and output unit controllers, associated with the DS3IN circuit pack identified in Step 1, are in the in-service (IS) state.

    b. The protection switch circuit packs within the input unit, associated with the DS3IN circuit pack identified in Step 1, are in the in-service (IS) state.

    c. The circuit packs along the failed path, associated with the DS3IN circuit pack identified in Step 1, are present and provisioned and have no active failure conditions other than the PAINTGRT condition.

    Do one of the following:

    - If this is the first time you received the NULL response and all of the previous statements are *true*, you have a problem that needs to be reported to your system administrator or next level of technical support.
    - If this is the first time you received the NULL response and any or all of the previous statements are *false*, correct the situation(s) and repeat Step 16 from the beginning.
    - If this is the second time you've executed Step 16 and received the NULL response, stop here and call your system administrator or the next level of technical support.

18. Having received the PASS response, perform the following steps:

    a. Check the craft interface terminal for one of the following autonomous messages:

— For *Message Set 1*:

```
  <TID #n YY-MM-DD HH:MM:SS>
A <ASEQ> REPT SW EQPT
  /* WORKING ENTITY,SWITCH DIRECTION */
  " <WORKING ENTITY>,WKG "
;
```

— For *Message Set 2*:

```
  <TID YY-MM-DD HH:MM:SS>
A <ASEQ> REPT SW EQPT
   " <WORKING ENTITY>,WKG "
;
```

where

WORKING ENTITY = the DS3SW circuit pack identified in Step 1

b. Verify that the DS3IN and DS3SW circuit packs identified in Step 1 no longer generate alarms by entering the two commands that follow:

RTRV-ALM-EQPT::ALL::,PAINTGRT;

and

RTRV-PATH-T3::ALL::PAINTGRT;

In both system responses, the DS3IN and DS3SW circuit packs identified in Step 1 should *not* appear in the message and the red LEDs should no longer be lighted.

c. Verify a successful switch to working of the DS3SW circuit pack identified in Step 1 by entering:

RTRV-STATE-EQPT::ELOC;

where

ELOC = the DS3SW circuit pack

The system output should be one of the following messages:

— For *Message Set 1*:

```
  <TID #n YY-MM-DD HH:MM:SS>
M RTRV STATE EQPT::<ELOC>::ALL COMPLD
  /* LOC:STATE */
  " <LOC>:ACT "
;
```

— For *Message Set 2*:

```
  <TID YY-MM-DD HH:MM:SS>
M  RTRV STATE EQPT::<ELOC>::ALL COMPLD
   " <LOC>:ACT "
  ;
```

where

LOC = the DS3SW circuit pack identified in Step 1

- If the system shows the DS3SW circuit pack identified in Step 1 is active (ACT), continue this procedure at Step 18d.
- If the system responds with any other state, stop here and call your system administrator or the next level of technical support.

d. Using standard office procedures, label and record the DS3SW circuit pack, set aside in Step 14, as failed and in need of repair. If you need instructions for returning a failed circuit pack, see Procedure 3-11, "Returning Circuit Packs for Repair."

e. Since the original DS3IN circuit pack is not at fault, it can be put in the spares storage cabinet for future use.

f. You have successfully corrected the problem. If more alarms exist on the frame, return to Procedure 9-1, "How to Clear Alarms," to determine the next corrective action to take.

Checking the Cables

19. Having received the FAIL response, identify the failed cable by entering:

RTRV-CABLE-T3::ALL::PAINTGRT;

The system responds with one of the following messages:

— For *Message Set 1*:

```
  <TID #n YY-MM-DD HH:MM:SS>
M  RTRV CABLE T3::::PAINTGRT COMPLD
   /* DS3IN,CABLE,PIN #:DS3SW_IN,CABLE,PIN #:
         DS3SW_OUT,CABLE,PIN #:DS3OUT,CABLE,PIN #
*/
   " <DS3IN,CABLE,PIN #:DS3SW_IN,CABLE,PIN #:
         DS3SW_OUT,CABLE,PIN #:DS3OUT,CABLE,PIN
#> "
;
```

— For *Message Set 2*:

```
  <TID YY-MM-DD HH:MM:SS>
 M RTRV CABLE T3::::PAINTGRT COMPLD
   " <DS3IN,CABLE,PIN #:DS3SW_IN,CABLE,PIN #:
        DS3SW_OUT,CABLE,PIN #:DS3OUT,CABLE,PIN
#> "
  ;
```

Be certain to note the cable that is associated with the DS3IN circuit pack identified in Step 1. The numbers in the CABLE field, those starting with J, correlate to the numbers on the octopus cable connectors attached to the backplane. The suspected cable segment will be that segment between the DS3 input interface (DS3IN INTFC) module and the DS3 switch (DS3SW) module.

20. Make sure you have written down the cable's location for future use.
21. Wearing an ESD wrist strap, remove the backplane covers. Using the cable identification from Step 20, visually examine, at both ends, the cable that runs between the DS3IN module and the DS3SW module.
22. Visually verify that the cable is correctly plugged in and that there are no offset, misaligned, or cocked connectors.
    - If you observe any of the above problems, continue this procedure at Step 23.
    - If you do *not* observe any problems with the cable, continue this procedure at Step 27.
23. Rectify the problem observed with the cable identified in Step 20.
24. At the craft interface terminal, check to see if the previous steps have cleared the problem by entering:

    TEST-PATH-T3::::PAINTGRT;

    The system responds with one of the following messages:

    — For *Message Set 1*:

```
  <TID #n YY-MM-DD HH:MM:SS>
M  TEST PATH T3:::PAINTGRT COMPLD
   /* DS3_IN,DS3_OUT:LOC,CHAN_OUT:LOC,CHAN_IN,
         CHAN_OUT:LOC,CHAN_IN:TAG:RESULT */
   " <DS3_IN,DS3_OUT:LOC,CHAN_OUT:LOC,CHAN_IN,
         CHAN_OUT:LOC,CHAN_IN:TAG:RESULT> "
;
```

— For *Message Set 2*:

```
  <TID YY-MM-DD HH:MM:SS>
M  TEST PATH T3:::PAINTGRT COMPLD
   " <DS3_IN,DS3_OUT:LOC,CHAN_OUT:LOC,CHAN_IN,
        CHAN_OUT:LOC,CHAN_IN:TAG:RESULT> "
;
```

where

LOC = the DS3IN circuit pack location

RESULT = the test results; NULL means that the test could not be run at the time it was requested, PASS means the specified path is fault-free, FAIL means the associated path is failed.

Do one of the following:

- If the system responds with NULL, continue this procedure at Step 25.
- If the system responds with PASS, continue this procedure at Step 26.
- If the system responds with FAIL, continue this procedure at Step 27.

25. Having received a NULL response, check to see that *all* the statements that follow are true:

    a. The input and output unit controllers, associated with the DS3IN circuit pack identified in Step 1, are in the in-service (IS) state.

    b. The protection switch circuit packs within the input unit, associated with the DS3IN circuit pack identified in Step 1, are in the in-service (IS) state.

    c. The circuit packs along the failed path, associated with the DS3IN circuit pack identified in Step 1, are present and provisioned and have no active failure conditions other than the PAINTGRT condition.

    Do one of the following:

    - If this is the first time you received the NULL response and all of the previous statements are *true*, you have a problem that needs to be reported to your system administrator or next level of technical support.
    - If this is the first time you received the NULL response and any or all of the previous statements are *false*, correct the situation(s) and repeat Step 24 from the beginning.
    - If this is the second time you have executed Step 24 and received the NULL response, stop here and call your system administrator or the next level of technical support.

26. Having received the PASS response, perform the following steps:

a. Check the craft interface terminal for one of the following autonomous messages:

— For *Message Set 1*:

```
  <TID #n YY-MM-DD HH:MM:SS>
A <ASEQ> REPT SW EQPT
   /* WORKING ENTITY,SWITCH DIRECTION */
   " <WORKING ENTITY>,WKG "
;
```

— For *Message Set 2*:

```
  <TID YY-MM-DD HH:MM:SS>
A <ASEQ> REPT SW EQPT
   " <WORKING ENTITY>,WKG "
;
```

where

`WORKING ENTITY` = the DS3SW circuit pack identified in Step 1

b. Verify that the DS3IN and DS3SW circuit packs identified in Step 1 no longer generate alarms by entering the two commands that follow:

`RTRV-ALM-EQPT::ALL::,PAINTGRT;`

and

`RTRV-PATH-T3::ALL::PAINTGRT;`

In both system responses, the DS3IN and DS3SW circuit packs identified in Step 1 should *not* appear in the message and the red LEDs should no longer be lighted.

c. Verify a successful switch to working of the DS3SW circuit pack by entering:

`RTRV-STATE-EQPT::ELOC;`

where

`ELOC` = the DS3SW circuit pack identified in Step 1

The system response should be one of the following messages:

— For *Message Set 1*:

```
  <TID #n YY-MM-DD HH:MM:SS>
M  RTRV STATE EQPT::<ELOC>::ALL COMPLD
   /* LOC:STATE */
   " <LOC>:ACT "
;
```

— For *Message Set 2*:

```
  <TID YY-MM-DD HH:MM:SS>
M  RTRV STATE EQPT::<ELOC>::ALL COMPLD
   " <LOC>:ACT "
;
```

where

LOC = the DS3SW circuit pack identified in Step 1

d. Since the original DS3IN and DS3SW circuit packs are not at fault, they can be put in the spares storage cabinet for future use.

e. Wearing an ESD wrist strap, reattach the backplane covers.

f. You have successfully corrected the problem. If more alarms exist on the frame, return to Procedure 9-1, "How to Clear Alarms," to determine the next corrective action to take.

27. Having arrived at this step because you did *not* observe cable problems in Step 22 or because you received the FAIL response in Step 24, call your system administrator or the next level of technical support to fix the cable. Note the number of this procedure and the number of the next step so that you can return to the correct location once the failed cable is repaired.

28. After the failed cable has been repaired by your system administrator or the next level of technical support, continue this procedure at Step 29.

29. At the craft interface terminal, verify that the problem has been corrected by entering:

TEST-PATH-T3:::PAINTGRT;

The system responds with one of the following messages:

— For *Message Set 1*:

```
  <TID #n YY-MM-DD HH:MM:SS>
M  TEST PATH T3::::PAINTGRT COMPLD
   /* DS3_IN,DS3_OUT:LOC,CHAN_OUT:LOC,CHAN_IN,
         CHAN_OUT:LOC,CHAN_IN:TAG:RESULT */
   " <DS3_IN,DS3_OUT:LOC,CHAN_OUT:LOC,CHAN_IN,
         CHAN_OUT:LOC,CHAN_IN:TAG:>PASS "
;
```

— For *Message Set 2*:

```
  <TID YY-MM-DD HH:MM:SS>
M  TEST PATH T3::::PAINTGRT COMPLD
   " <DS3_IN,DS3_OUT:LOC,CHAN_OUT:LOC,CHAN_IN,
         CHAN_OUT:LOC,CHAN_IN:TAG:>PASS "
;
```

30. Having received the PASS response, perform the following steps:

    a. Check the craft interface terminal for one of the following autonomous messages:

    — For *Message Set 1*:

```
  <TID #n YY-MM-DD HH:MM:SS>
A <ASEQ> REPT SW EQPT
   /* WORKING ENTITY,SWITCH DIRECTION */
   " <WORKING ENTITY>,WKG "
;
```

    — For *Message Set 2*:

```
  <TID YY-MM-DD HH:MM:SS>
A <ASEQ> REPT SW EQPT
   " <WORKING ENTITY>,WKG "
;
```

    where

    WORKING ENTITY = the DS3SW circuit pack identified in Step 1

    b. Verify that the DS3IN and DS3SW circuit packs identified in Step 1 no longer generate alarms by entering the two commands that follow:

    RTRV-ALM-EQPT::ALL::,PAINTGRT;

    and

    RTRV-PATH-T3::ALL::PAINTGRT;

    In both system responses, the DS3IN and DS3SW circuit packs identified in Step 1 should *not* appear in the message and the red LEDs should no longer be lighted.

    c. Verify a successful switch to working of the DS3SW circuit pack by entering:

    RTRV-STATE-EQPT::ELOC;

    where

    ELOC = the DS3SW circuit pack identified in Step 1

    The system response should be one of the following messages:

    — For *Message Set 1*:

```
  <TID #n YY-MM-DD HH:MM:SS>
M  RTRV STATE EQPT::<ELOC>::ALL COMPLD
   /* LOC:STATE */
   " <LOC>:ACT "
;
```

— For *Message Set 2*:

```
  <TID YY-MM-DD HH:MM:SS>
M  RTRV STATE EQPT::<ELOC>::ALL COMPLD
   " <LOC>:ACT "
;
```

where

LOC = the DS3SW circuit pack identified in Step 1

d. Since the original DS3IN and DS3SW circuit packs are not at fault, they can be put in the spares storage cabinet for future use.

e. Wearing an ESD wrist strap, reattach the backplane covers.

f. You have successfully corrected the problem. If more alarms exist on the frame, return to Procedure 9-1, "How to Clear Alarms," to determine the next corrective action to take.

Procedure 11-6. DS3IN:MJ,PAINTGRT, DS3IN:MN,PAINTGRT and DS3SW:MN,PAINTGRT Alarms with No Other DS3IN or DS3SW Circuit Packs Showing PAINTGRT

Please note that there are two sections within Procedure 11-6; each section represents one possible source of the PAINTGRT condition:

- Checking the DS3IN Circuit Pack
- Checking the Cables

Sometimes you will use the steps in both sections to clear the PAINTGRT condition; other times only the first or second sections will be needed. *However, regardless of the number of sections you use, the steps must be executed in the order presented.*

CAUTION:
Electrostatic discharge (ESD) damage.
ESD can cause damage to the components of a DACS III-2000 system. Wear an ESD wrist strap when working around the frame.

Checking the DS3IN Circuit Pack

1. Have the system output from Procedure 11-1, in which you identified the affected DS3IN and DS3SW circuit packs, available for referencing.

   If all non-PAINTGRT equipment alarms have been cleared as instructed in Procedure 9-1, then the affected DS3IN circuit pack, with an MJ alarm level, will be a protection pack (that is, P1/P2).

   This DS3IN circuit pack (with the MJ alarm level) will be the DS3IN pack that will be referenced throughout this procedure. All references in subsequent steps to the affected DS3IN circuit pack refer to the pack with the MJ alarm, NOT the pack with the MN alarm.

WARNING:
Potential for service disruption.
Only two DS3IN circuit packs and one DS3SW circuit pack, and no other types of circuit packs, should have an active PAINTGRT condition.
If more than these three circuit packs show PAINTGRT, do NOT execute this procedure. Return to Table 11-1, "PAINTGRT Decision Tree," check the "Additional Conditions" column, and select the appropriate procedure.

2. Obtain a spare DS3IN (ARW6) circuit pack.
   - If a spare circuit pack is not available, stop here and call your system administrator or the next level of technical support.

- If a spare circuit pack is available, continue this procedure at Step 3.

3. At the craft interface terminal, verify that the DS3IN-P1/P2 circuit pack is in the active fault (ACT-FLT) state by entering:

   RTRV-STATE-EQPT::ELOC::ALL;

   where

   ELOC = the DS3IN circuit pack identified in Step 1, specified as DS3IN-{1 through 8}-{P1,P2}.

   The system should respond with one of the following messages:

   — For *Message Set 1*:

   ```
     <TID #n YY-MM-DD HH:MM:SS>
   M  RTRV STATE EQPT::<ELOC>::ALL COMPLD
      /* LOC:STATE */
      " DS3IN-<unit-slot>:ACT-FLT "
   ;
   ```

   — For *Message Set 2*:

   ```
     <TID YY-MM-DD HH:MM:SS>
   M  RTRV STATE EQPT::<ELOC>::ALL COMPLD
      " DS3IN-<unit-slot>:ACT-FLT "
   ;
   ```

   - If the system shows the DS3IN circuit pack is in the active fault (ACT-FLT) state, continue this procedure at Step 4.
   - If the system responds with any other state, stop here and call your system administrator or the next level of technical support.

4. Go to the DACS III-2000 frame and remove the DS3IN circuit pack that was identified in Step 1. If you need detailed instructions, see Procedure 3-2, "Removing Circuit Packs."

5. Using standard office procedures, write down the

   — serial number of the removed DS3IN circuit pack

   — unit and slot from which it was removed

   Set aside the removed DS3IN circuit pack until the procedure instructs you to do something with it.

6. Insert the spare DS3IN circuit pack into the empty slot. If you need detailed instructions, see Procedure 3-1, "Installing Circuit Packs."

7. At the craft interface terminal, check to see if the previous steps have cleared the problem by entering:

   TEST-PATH-T3::::PAINTGRT;

   The system responds with one of the following messages:

   — For *Message Set 1*:

```
  <TID #n YY-MM-DD HH:MM:SS>
M  TEST PATH T3::::PAINTGRT COMPLD
   /* DS3_IN,DS3_OUT:LOC,CHAN_OUT:LOC,CHAN_IN,
         CHAN_OUT:LOC,CHAN_IN:TAG:RESULT */
   " <DS3_IN,DS3_OUT:LOC,CHAN_OUT:LOC,CHAN_IN,
         CHAN_OUT:LOC,CHAN_IN:TAG:RESULT> "
;
```

   — For *Message Set 2*:

```
  <TID YY-MM-DD HH:MM:SS>
M  TEST PATH T3::::PAINTGRT COMPLD
   " <DS3_IN,DS3_OUT:LOC,CHAN_OUT:LOC,CHAN_IN,
         CHAN_OUT:LOC,CHAN_IN:TAG:RESULT> "
;
```

   where

   `LOC` = the DS3IN circuit pack location, identified in Step 1

   `RESULT` = the test results; `NULL` means that the test could not be run at the time it was requested, `PASS` means the specified path is fault-free, `FAIL` means the associated path is failed

NOTE:
More than one path may be tested, which would result in more than one `RESULT` being reported in the message. Make sure that the path you are observing is the one containing the DS3IN circuit pack identified in Step 1.

Do one of the following:

- If the system responds with `NULL`, continue this procedure at Step 8.
- If the system responds with `PASS`, continue this procedure at Step 9.
- If the system responds with `FAIL`, continue this procedure at Step 10.

8. Having received a `NULL` response, check to see that *all* the statements that follow are true:

   a. The input and output unit controllers, associated with the DS3IN circuit pack identified in Step 1, are in the in-service (`IS`) state.

b. The protection switch circuit packs within the input unit, associated with the DS3IN circuit pack identified in Step 1, are in the in-service (IS) state.

c. The circuit packs along the failed path, associated with the DS3IN circuit pack identified in Step 1, are present and provisioned and have no active failure conditions other than the PAINTGRT condition.

Do one of the following:

- If this is the first time you received the NULL response and all of the previous statements are *true*, you have a problem that needs to be reported to your system administrator or next level of technical support.
- If this is the first time you received the NULL response and any or all of the previous statements are *false*, correct the situation(s) and repeat Step 7 from the beginning.
- If this is the second time you've executed Step 7 and received the NULL response, stop here and call your system administrator or the next level of technical support.

9. Having received the PASS response, perform the following steps:

a. Verify that the DS3IN circuit pack identified in Step 1 no longer generates an alarm, by entering the two commands that follow:

```
RTRV-ALM-EQPT::ALL::,PAINTGRT;
```

and

```
RTRV-PATH-T3::ALL::PAINTGRT;
```

In both system responses, the DS3IN circuit pack identified in Step 1 should *not* appear in the message.

b. Using standard office procedures, label and record the DS3IN circuit pack, set aside in Step 5, as failed and in need of repair. If you need instructions for returning a failed circuit pack, see Procedure 3-11, "Returning Circuit Packs for Repair."

c. You have successfully corrected the problem. If more alarms exist on the frame, return to Procedure 9-1, "How to Clear Alarms," to determine the next corrective action to take.

Checking the Cables

10. Having received the FAIL response, identify the failed cable by entering:

    RTRV-CABLE-T3::ALL::PAINTGRT;

    The system responds with one of the following messages:

    — For *Message Set 1*:

    ```
      <TID #n YY-MM-DD HH:MM:SS>
    M  RTRV CABLE T3::::PAINTGRT COMPLD
       /* DS3IN,CABLE,PIN #:DS3SW_IN,CABLE,PIN #:
             DS3SW_OUT,CABLE,PIN #:DS3OUT,CABLE,PIN #
    */
       " <DS3IN,CABLE,PIN #:DS3SW_IN,CABLE,PIN #:
             DS3SW_OUT,CABLE,PIN #:DS3OUT,CABLE,PIN
    #> "
    ;
    ```

    — For *Message Set 2*:

    ```
      <TID YY-MM-DD HH:MM:SS>
    M  RTRV CABLE T3::::PAINTGRT COMPLD
       " <DS3IN,CABLE,PIN #:DS3SW_IN,CABLE,PIN #:
             DS3SW_OUT,CABLE,PIN #:DS3OUT,CABLE,PIN
    #> "
    ;
    ```

    Be certain to note the cable that is associated with the DS3IN circuit pack identified in Step 1. The numbers in the CABLE field, those starting with *J*, correlate to the numbers on the octopus cable connectors attached to the backplane. The suspected cable segment will be that segment between the DS3 input interface (DS3IN INTFC) module and the DS3 switch (DS3SW) module.

11. Make sure you have written down the cable's location for future use.

12. Wearing an ESD wrist strap, remove the backplane covers. Using the cable identification from Step 11, visually examine, at both ends, the cable that runs between the DS3IN module and the DS3SW module.

13. Visually verify that the cable is correctly plugged in and that there are no offset, misaligned, or cocked connectors.

    - If you observe any of the above problems, continue this procedure at Step 14.
    - If you do *not* observe any problems with the cable, continue this procedure at Step 18.

14. Rectify the problem observed with the cable identified in Step 11.

15. At the craft interface terminal, check to see if the previous steps have cleared the problem by entering:

    TEST-PATH-T3::::PAINTGRT;

    The system responds with one of the following messages:

    — For *Message Set 1*:

    ```
      <TID #n YY-MM-DD HH:MM:SS>
    M  TEST PATH T3:::PAINTGRT COMPLD
       /* DS3_IN,DS3_OUT:LOC,CHAN_OUT:LOC,CHAN_IN,
             CHAN_OUT:LOC,CHAN_IN:TAG:RESULT */
       " <DS3_IN,DS3_OUT:LOC,CHAN_OUT:LOC,CHAN_IN,
             CHAN_OUT:LOC,CHAN_IN:TAG:RESULT> "
    ;
    ```

    — For *Message Set 2*:

    ```
      <TID YY-MM-DD HH:MM:SS>
    M  TEST PATH T3:::PAINTGRT COMPLD
       " <DS3_IN,DS3_OUT:LOC,CHAN_OUT:LOC,CHAN_IN,
             CHAN_OUT:LOC,CHAN_IN:TAG:RESULT> "
    ;
    ```

    where

    LOC = the DS3IN circuit pack location, identified in Step 1

    RESULT = the test results; NULL means that the test could not be run at the time it was requested, PASS means the specified path is fault-free, FAIL means the associated path is failed

NOTE:
More than one path may be tested, which would result in more than one RESULT being reported in the message. Make sure that the path you are observing is the one containing the DS3IN circuit pack identified in Step 1.

Do one of the following:

- If the system responds with NULL, continue this procedure at Step 16.
- If the system responds with PASS, continue this procedure at Step 17.
- If the system responds with FAIL, continue this procedure at Step 18.

16. Having received a NULL response, check to see that *all* the statements that follow are true:

    a. The input and output unit controllers, associated with the DS3IN circuit pack identified in Step 1, are in the in-service (IS) state.

b. The protection switch circuit packs within the input unit, associated with the DS3IN circuit pack identified in Step 1, are in the in-service (IS) state.

c. The circuit packs along the failed path, associated with the DS3IN circuit pack identified in Step 1, are present and provisioned and have no active failure conditions other than the PAINTGRT condition.

Do one of the following:

- If this is the first time you received the NULL response and all of the previous statements are *true*, you have a problem that needs to be reported to your system administrator or next level of technical support.
- If this is the first time you received the NULL response and any or all of the previous statements are *false*, correct the situation(s) and repeat Step 15 from the beginning.
- If this is the second time you have executed Step 15 and received the NULL response, stop here and call your system administrator or the next level of technical support.

17. Having received the PASS response, perform the following steps:

    a. Verify that the DS3IN circuit pack identified in Step 1 no longer generates an alarm, by entering the two commands that follow:

    RTRV-ALM-EQPT::ALL::,PAINTGRT;

    and

    RTRV-PATH-T3::ALL::PAINTGRT;

    In both system responses, the DS3IN circuit pack identified in Step 1 should *not* appear in the message and the red LED should no longer be lighted.

    b. Since the original DS3IN circuit pack is not at fault, it can be put in the spares storage cabinet for future use.

    c. Wearing an ESD wrist strap, reattach the backplane covers.

    d. You have successfully corrected the problem. If more alarms exist on the frame, return to Procedure 9-1, "How to Clear Alarms," to determine the next corrective action to take.

18. Having arrived at this step because you did *not* observe cable problems in Step 13 or because you received the FAIL response in Step 15, call your system administrator or the next level of technical support to fix the cable. Note the number of this procedure and the number of the next step so that you can return to the correct location once the failed cable is repaired.

19. After the failed cable has been repaired by your system administrator or the next level of technical support, continue this procedure at Step 20.

20. At the craft interface terminal, verify that the problem has been corrected by entering:

    TEST-PATH-T3::::PAINTGRT;

    The system responds with one of the following messages:

    — For *Message Set 1*:

    ```
      <TID #n YY-MM-DD HH:MM:SS>
    M  TEST PATH T3::::PAINTGRT COMPLD
       /* DS3_IN,DS3_OUT:LOC,CHAN_OUT:LOC,CHAN_IN,
             CHAN_OUT:LOC,CHAN_IN:TAG:RESULT */
       " <DS3_IN,DS3_OUT:LOC,CHAN_OUT:LOC,CHAN_IN,
             CHAN_OUT:LOC,CHAN_IN:TAG:>PASS "
    ;
    ```

    — For *Message Set 2*:

    ```
      <TID YY-MM-DD HH:MM:SS>
    M  TEST PATH T3::::PAINTGRT COMPLD
       " <DS3_IN,DS3_OUT:LOC,CHAN_OUT:LOC,CHAN_IN,
             CHAN_OUT:LOC,CHAN_IN:TAG:>PASS "
    ;
    ```

21. Verify that the system output is PASS. Having received the PASS response, perform the following steps:

    a. Verify that the DS3IN circuit pack identified in Step 1 no longer generates an alarm, by entering the two commands that follow:

       RTRV-ALM-EQPT::ALL::,PAINTGRT;

       and

       RTRV-PATH-T3::ALL::PAINTGRT;

       In both system responses, the DS3IN circuit pack identified in Step 1 should *not* appear in the message and the red LED should no longer be lighted.

    b. Since the original DS3IN circuit pack is not at fault, it can be put in the spares storage cabinet for future use.

    c. Wearing an ESD wrist strap, reattach the backplane covers.

    d. You have successfully corrected the problem. If more alarms exist on the frame, return to Procedure 9-1, "How to Clear Alarms," to determine the next corrective action to take.

Procedure 11-7. DS3OUT:MN,PAINTGRT and DS3SW:MN,PAINTGRT Alarms with No Other DS3OUT or DS3SW Circuit Packs Showing PAINTGRT

Please note that there are two sections within Procedure 11-7; each section represents one possible source of the PAINTGRT condition:

- Checking the DS3SW Circuit Pack
- Checking the Cables

Sometimes you will use the steps in both sections to clear the PAINTGRT condition; other times only the first or second sections will be needed. *However, regardless of the number of sections you use, the steps must be executed in the order presented.*

CAUTION:
Electrostatic discharge (ESD) damage.
ESD can cause damage to the components of a DACS III-2000 system. Wear an ESD wrist strap when working around the frame.

Checking the DS3SW Circuit Pack

1. Have the system output from Procedure 11-1, in which you identified the affected DS3OUT and DS3SW circuit packs, available for referencing.

WARNING:
Potential for service disruption.
Only one DS3OUT and DS3SW circuit pack, and no other types of circuit packs, should have an active PAINTGRT condition.
If more than these two packs show PAINTGRT, do NOT execute this procedure. Return to Table 11-1, "PAINTGRT Decision Tree," check the "Additional Conditions" column, and select the appropriate procedure.

2. Obtain a spare DS3SW (AWL1 or AYJ1) circuit pack.
   - If a spare circuit pack is not available, stop here and call your system administrator or the next level of technical support.
   - If a spare circuit pack is available, continue this procedure at Step 3.
3. At the craft interface terminal, verify that the DS3SW circuit pack is in the out-of-service fault (`OOS-FLT`) state by entering:

   `RTRV-STATE-EQPT::ELOC::ALL;`

   where

   `ELOC` = the DS3SW circuit pack identified in Step 1, specified as DS3SW-{1 through 4}-{1 through 16}

The system should respond with one of the following messages:

— For *Message Set 1*:

```
  <TID #n YY-MM-DD HH:MM:SS>
M  RTRV STATE EQPT::<ELOC>::ALL COMPLD
   /* LOC:STATE */
   " DS3SW-<unit-slot>:OOS-FLT "
;
```

— For *Message Set 2*:

```
  <TID YY-MM-DD HH:MM:SS>
M  RTRV STATE EQPT::<ELOC>::ALL COMPLD
   " DS3SW-<unit-slot>:OOS-FLT "
;
```

- If the system shows the DS3SW circuit pack is out-of-service fault (OOS-FLT), continue this procedure at Step 4.
- If the system responds with any other state, stop here and call your system administrator or the next level of technical support.

4. At the craft interface terminal, verify that the related protection circuit pack is in the active (ACT) state by entering:

RTRV-STATE-EQPT::ELOC::ALL;

where

ELOC = the protection pack; identified as DS3SW-1-16 for a 1024-size system; DS3SW-4-15&-16 for a 2048-size system

The system should respond with one of the following messages:

— For *Message Set 1*:

```
  <TID #n YY-MM-DD HH:MM:SS>
M RTRV STATE EQPT::<ELOC>::ALL COMPLD
   /* LOC:STATE */
   " DS3SW-<unit-slot>:ACT"
;
```

— For *Message Set 2*:

```
  <TID YY-MM-DD HH:MM:SS>
M  RTRV STATE EQPT::<ELOC>::ALL COMPLD
   " DS3SW-<unit-slot>:ACT"
;
```

- If the system shows the protection circuit pack is active (ACT), continue this procedure at Step 5.
- If the system responds with any other state, stop here and call your system administrator or the next level of technical support.

5. Go to the DACS III-2000 frame and remove the DS3SW circuit pack that was identified in Step 1.
   - If you are working on a 1024-size frame and need detailed instructions, see Procedure 3-2, "Removing Circuit Packs."
   - If you are working on a 2048-size frame and need detailed instructions, see Procedure 3-4, "Removing DS3SWL CTR Circuit Packs."
6. Using standard office procedures, write down the
   — serial number of the removed DS3SW circuit pack
   — the slot from which it was removed

   Set aside the removed DS3SW circuit pack until the procedure instructs you to do something with it.
7. Insert the spare DS3SW circuit pack into the empty slot.
   - If you are working on a 1024-size frame and need detailed instructions, see Procedure 3-1, "Installing Circuit Packs."
   - If you are working on a 2048-size frame and need detailed instructions, see Procedure 3-3, "Installing DS3SWL CTR Circuit Packs."
8. At the craft interface terminal, check to see if the previous steps have cleared the problem by entering:

   TEST-PATH-T3::::PAINTGRT;

   The system responds with one of the following messages:

   — For *Message Set 1*:

```
. <TID #n YY-MM-DD HH:MM:SS>
M  TEST PATH T3::::PAINTGRT COMPLD
   /* DS3_IN,DS3_OUT:LOC,CHAN_OUT:LOC,CHAN_IN,
         CHAN_OUT:LOC,CHAN_IN:TAG:RESULT */
   " <DS3_IN,DS3_OUT:LOC,CHAN_OUT:LOC,CHAN_IN,
         CHAN_OUT:LOC,CHAN_IN:TAG:RESULT> "
;
```

   — For *Message Set 2*:

```
  <TID YY-MM-DD HH:MM:SS>
M  TEST PATH T3::::PAINTGRT COMPLD
   " <DS3_IN,DS3_OUT:LOC,CHAN_OUT:LOC,CHAN_IN,
         CHAN_OUT:LOC,CHAN_IN:TAG:RESULT> "
;
```

   where

   LOC = the DS3SW circuit pack location identified in Step 1, specified as DS3SW-{1 through 4}-{1 through 16}

RESULT = the test results; NULL means that the test could not be run at the time it was requested, PASS means the specified path is fault-free, FAIL means the associated path is failed

Do one of the following:

- If the system responds with NULL, continue this procedure at Step 9.
- If the system responds with PASS, continue this procedure at Step 10.
- If the system responds with FAIL, continue this procedure at Step 11.

9. Having received a NULL response, check to see that *all* the statements that follow are true:

   a. The input and output unit controllers, associated with the DS3OUT circuit pack identified in Step 1, are in the in-service (IS) state.

   b. The protection switch circuit packs within the input unit, associated with the DS3OUT circuit pack identified in Step 1, are in the in-service (IS) state.

   c. The circuit packs along the failed path, associated with the DS3OUT circuit pack identified in Step 1, are present and provisioned and have no active failure conditions other than the PAINTGRT condition.

   Do one of the following:

   - If this is the first time you received the NULL response and all of the previous statements are *true*, you have a problem that needs to be reported to your system administrator or next level of technical support.
   - If this is the first time you received the NULL response and any or all of the previous statements are *false*, correct the situation(s) and repeat Step 8 from the beginning.
   - If this is the second time you've executed Step 8 and received the NULL response, stop here and call your system administrator or the next level of technical support.

10. Having received the PASS response, perform the following steps:

    a. Check the craft interface terminal for the two autonomous messages that follow:

— first message—*Message Set 1*:

```
  <TID #n YY-MM-DD HH:MM:SS>
A <ASEQ> REPT SW EQPT
    /* WORKING ENTITY,SWITCH DIRECTION */
    " <WORKING ENTITY>,WKG "
;
```

— first message—*Message Set 2*:

```
  <TID YY-MM-DD HH:MM:SS>
A <ASEQ> REPT SW EQPT
    " <WORKING ENTITY>,WKG "
;
```

where

`WORKING ENTITY` = the DS3OUT circuit pack identified in Step 1

— second message—*Message Set 1*:

```
  <TID #n YY-MM-DD HH:MM:SS>
A <ASEQ> REPT SW EQPT
    /* WORKING ENTITY,SWITCH DIRECTION */
    " <WORKING ENTITY>,WKG "
;
```

— second message—*Message Set 2*:

```
  <TID YY-MM-DD HH:MM:SS>
A <ASEQ> REPT SW EQPT
    " <WORKING ENTITY>,WKG "
;
```

where

`WORKING ENTITY` = the DS3SW circuit pack identified in Step 1

b. Verify that the DS3OUT and DS3SW circuit packs identified in Step 1 no longer generate alarms by entering the two commands that follow:

`RTRV-ALM-EQPT::ALL::,PAINTGRT;`

and

`RTRV-PATH-T3::ALL::PAINTGRT;`

In both system responses, the DS3OUT and DS3SW circuit packs identified in Step 1 should *not* appear in the message and the red LEDs should no longer be lighted.

c. Using standard office procedures, label and record the DS3SW circuit pack, set aside in Step 6, as failed and in need of repair. If you need instructions for returning a failed circuit pack, see Procedure 3-11, "Returning Circuit Packs for Repair."

d. You have successfully corrected the problem. If more alarms exist on the frame, return to Procedure 9-1, "How to Clear Alarms," to determine the next corrective action to take.

Checking the Cables

11. Having received the FAIL response, identify the failed cable by entering:

RTRV-CABLE-T3::ALL::PAINTGRT;

The system responds with one of the following messages:

— For *Message Set 1*:

```
  <TID #n YY-MM-DD HH:MM:SS>
M  RTRV CABLE T3::::PAINTGRT COMPLD
   /* DS3IN,CABLE,PIN #:DS3SW_IN,CABLE,PIN #:
         DS3SW_OUT,CABLE,PIN #:DS3OUT,CABLE,PIN #
*/
   " <DS3IN,CABLE,PIN #:DS3SW_IN,CABLE,PIN #:
         DS3SW_OUT,CABLE,PIN #:DS3OUT,CABLE,PIN
#> "
;
```

— For *Message Set 2*:

```
  <TID YY-MM-DD HH:MM:SS>
M  RTRV CABLE T3::::PAINTGRT COMPLD
   " <DS3IN,CABLE,PIN #:DS3SW_IN,CABLE,PIN #:
         DS3SW_OUT,CABLE,PIN #:DS3OUT,CABLE,PIN
#> "
;
```

Be certain to note the cable that is associated with the DS3OUT circuit pack identified in Step 1. The numbers in the CABLE field, those starting with J, correlate to the numbers on the octopus cable connectors attached to the backplane. The suspected cable segment will be that segment between the DS3 switch (DS3SW) module and the DS3 output interface (DS3OUT INTFC) module.

12. Make sure you have written down the cable's location for future use.

13. Wearing an ESD wrist strap, remove the backplane covers. Using the cable identification from Step 12, visually examine, at both ends, the cable that runs between the DS3SW module and the DS3OUT module.

14. Visually verify that the cable is correctly plugged in and that there are no offset, misaligned, or cocked connectors.

- If you observe any of the above problems, continue this procedure at Step 15.
- If you do *not* observe any problems with the cable, continue this procedure at Step 19.

15. Rectify the problem observed with the cable identified in Step 12.
16. At the craft interface terminal, check to see if the previous steps have cleared the problem by entering:

    TEST-PATH-T3::::PAINTGRT;

    The system responds with one of the following messages:

    — For *Message Set 1*:

    ```
      <TID #n YY-MM-DD HH:MM:SS>
    M  TEST PATH T3:::PAINTGRT COMPLD
       /* DS3_IN,DS3_OUT:LOC,CHAN_OUT:LOC,CHAN_IN,
             CHAN_OUT:LOC,CHAN_IN:TAG:RESULT */
       " <DS3_IN,DS3_OUT:LOC,CHAN_OUT:LOC,CHAN_IN,
             CHAN_OUT:LOC,CHAN_IN:TAG:RESULT> "
    ;
    ```

    — For *Message Set 2*:

    ```
      <TID YY-MM-DD HH:MM:SS>
    M  TEST PATH T3:::PAINTGRT COMPLD
       " <DS3_IN,DS3_OUT:LOC,CHAN_OUT:LOC,CHAN_IN,
             CHAN_OUT:LOC,CHAN_IN:TAG:RESULT> "
    ;
    ```

    where

    LOC = the DS3SW circuit pack location

    RESULT = the test results; NULL means that the test could not be run at the time it was requested, PASS means the specified path is fault-free, FAIL means the associated path is failed

    Do one of the following:

    - If the system responds with NULL, continue this procedure at Step 17.
    - If the system responds with PASS, continue this procedure at Step 18.
    - If the system responds with FAIL, continue this procedure at Step 19.

17. Having received a NULL response, check to see that *all* the statements that follow are true:

    a. The input and output unit controllers, associated with the DS3OUT circuit pack identified in Step 1, are in the in-service (IS) state.

b. The protection switch circuit packs within the input unit, associated with the DS3OUT circuit pack identified in Step 1, are in the in-service (IS) state.

c. The circuit packs along the failed path, associated with the DS3OUT circuit pack identified in Step 1, are present and provisioned and have no active failure conditions other than the PAINTGRT condition.

Do one of the following:

- If this is the first time you received the NULL response and all of the previous statements are *true*, you have a problem that needs to be reported to your system administrator or next level of technical support.
- If this is the first time you received the NULL response and any or all of the previous statements are *false*, correct the situation(s) and repeat Step 16 from the beginning.
- If this is the second time you have executed Step 16 and received the NULL response, stop here and call your system administrator or the next level of technical support.

18. Having received the PASS response, perform the following steps:

a. Check the craft interface terminal for the two autonomous messages that follow:

— first message—*Message Set 1*:

```
  <TID #n YY-MM-DD HH:MM:SS>
A <ASEQ> REPT SW EQPT
    /* WORKING ENTITY,SWITCH DIRECTION */
    " <WORKING ENTITY>,WKG "
;
```

— first message—*Message Set 2*:

```
  <TID YY-MM-DD HH:MM:SS>
A <ASEQ> REPT SW EQPT
    " <WORKING ENTITY>,WKG "
;
```

where

WORKING ENTITY = the DS3OUT circuit pack identified in Step 1

— second message—*Message Set 1*:

```
  <TID #n YY-MM-DD HH:MM:SS>
A <ASEQ> REPT SW EQPT
    /* WORKING ENTITY,SWITCH DIRECTION */
    " <WORKING ENTITY>,WKG "
;
```

— second message—*Message Set 2*:

```
  <TID YY-MM-DD HH:MM:SS>
A <ASEQ> REPT SW EQPT
  " <WORKING ENTITY>,WKG "
;
```

where

`WORKING ENTITY`= the DS3SW circuit pack identified in Step 1

b. Verify that the DS3OUT and DS3SW circuit packs identified in Step 1 no longer generate alarms by entering the two commands that follow:

`RTRV-ALM-EQPT::ALL::,PAINTGRT;`

and

`RTRV-PATH-T3::ALL::PAINTGRT;`

In both system responses, the DS3OUT and DS3SW circuit packs identified in Step 1 should *not* appear in the message and the red LEDs should no longer be lighted.

c. Since the original DS3SW circuit pack is not at fault, it can be put in the spares storage cabinet for future use.

d. Wearing an ESD wrist strap, reattach the backplane covers.

e. You have successfully corrected the problem. If more alarms exist on the frame, return to Procedure 9-1, "How to Clear Alarms," to determine the next corrective action to take.

19. Having arrived at this step because you did *not* observe cable problems in Step 14 or because you received the `FAIL` response in Step 16, call your system administrator or the next level of technical support to fix the cable. Note the number of this procedure and the number of the next step so that you can return to the correct location once the failed cable is repaired.

20. After the failed cable has been repaired by your system administrator or the next level of technical support, continue this procedure at Step 21.

21. At the craft interface terminal, verify that the problem has been corrected by entering:

`TEST-PATH-T3:::PAINTGRT;`

The system responds with one of the following messages:

— For *Message Set 1*:

```
  <TID #n YY-MM-DD HH:MM:SS>
M  TEST PATH T3::::PAINTGRT COMPLD
   /* DS3_IN,DS3_OUT:LOC,CHAN_OUT:LOC,CHAN_IN,
         CHAN_OUT:LOC,CHAN_IN:TAG:RESULT */
   " <DS3_IN,DS3_OUT:LOC,CHAN_OUT:LOC,CHAN_IN,
    CHAN_OUT:LOC,CHAN_IN:TAG:>PASS "
;
```

— For *Message Set 2*:

```
  <TID YY-MM-DD HH:MM:SS>
M  TEST PATH T3::::PAINTGRT COMPLD
   " <DS3_IN,DS3_OUT:LOC,CHAN_OUT:LOC,CHAN_IN,
         CHAN_OUT:LOC,CHAN_IN:TAG:>PASS "
;
```

22. Verify that the system output is PASS. Having received the PASS response, perform the following steps:

    a. Check the craft interface terminal for the two autonomous messages that follow:

    — first message—*Message Set 1*:

```
  <TID #n YY-MM-DD HH:MM:SS>
A <ASEQ> REPT SW EQPT
    /* WORKING ENTITY,SWITCH DIRECTION */
    " <WORKING ENTITY>,WKG "
;
```

    — first message—*Message Set 2*:

```
  <TID YY-MM-DD HH:MM:SS>
A <ASEQ> REPT SW EQPT
    " <WORKING ENTITY>,WKG "
;
```

    where

    WORKING ENTITY = the DS3OUT circuit pack identified in Step 1

    — second message—*Message Set 1*:

```
  <TID #n YY-MM-DD HH:MM:SS>
A <ASEQ> REPT SW EQPT
    /* WORKING ENTITY,SWITCH DIRECTION */
    " <WORKING ENTITY>,WKG "
;
```

— second message—*Message Set 2*:

```
  <TID YY-MM-DD HH:MM:SS>
A <ASEQ> REPT SW EQPT
   " <WORKING ENTITY>,WKG "
;
```

where

`WORKING ENTITY` = the DS3SW circuit pack identified in Step 1

b. Verify that the DS3OUT and DS3SW circuit packs identified in Step 1 no longer generate alarms by entering the two commands that follow:

`RTRV-ALM-EQPT::ALL::,PAINTGRT;`

and

`RTRV-PATH-T3::ALL::PAINTGRT;`

In both system responses, the DS3OUT and DS3SW circuit packs identified in Step 1 should *not* appear in the message and the red LEDs should no longer be lighted.

c. Since the original DS3SW circuit pack is not at fault, it can be put in the spares storage cabinet for future use.

d. Wearing an ESD wrist strap, reattach the backplane covers.

e. You have successfully corrected the problem. If more alarms exist on the frame, return to Procedure 9-1, "How to Clear Alarms," to determine the next corrective action to take.

Procedure 11-8. DS3OUT:MJ,PAINTGRT and DS3SW:MN,PAINTGRT Alarms with No Other DS3OUT or DS3SW Circuit Packs Showing PAINTGRT

Please note that there are three sections within Procedure 11-8; each section represents one possible source of the PAINTGRT condition:

- Checking the DS3OUT Circuit Pack
- Checking the DS3SW Circuit Pack
- Checking the Cables

Sometimes you will use the steps in all three sections to clear the PAINTGRT condition; other times only the first, or first and second, sections will be needed. *However, regardless of the number of sections you use, the steps must be executed in the order presented.*

CAUTION:
Electrostatic discharge (ESD) damage.
ESD can cause damage to the components of a DACS III-2000 system. Wear an ESD wrist strap when working around the frame.

Checking the DS3OUT Circuit Pack

1. Have the system output from Procedure 11-1, in which you identified the affected DS3OUT and DS3SW circuit packs, available for referencing.

   If all non-PAINTGRT equipment alarms have been cleared as instructed in Procedure 9-1, then the affected DS3OUT circuit pack will be a protection pack (that is, P1/P2).

WARNING:
Potential for service disruption.
Only one DS3OUT and one DS3SW circuit pack, and no other types of circuit packs, should have an active PAINTGRT condition. If more than these two circuit packs show PAINTGRT, do NOT execute this procedure. Return to Table 11-1, "PAINTGRT Decision Tree," check the "Additional Conditions" column, and select the appropriate procedure.

2. Obtain a spare DS3OUT (ARW2) circuit pack.
   - If a spare circuit pack is not available, stop here and call your system administrator or the next level of technical support.
   - If a spare circuit pack is available, continue this procedure at Step 3.

3. At the craft interface terminal, verify that the DS3OUT-P1/P2 circuit pack is in the out-of-service fault (OOS-FLT) state by entering:

   RTRV-STATE-EQPT::ELOC::ALL;

   where

   ELOC = the DS3OUT circuit pack identified in Step 1, specified as DS3OUT-{1 through 8}-{P1/P2}

   The system should respond with one of the following messages:

   — For *Message Set 1*:

   ```
     <TID #n YY-MM-DD HH:MM:SS>
   M  RTRV STATE EQPT::<ELOC>::ALL COMPLD
      /* LOC:STATE */
      " DS3OUT-<unit-slot>:OOS-FLT "
   ;
   ```

   — For *Message Set 2*:

   ```
     <TID YY-MM-DD HH:MM:SS>
   M  RTRV STATE EQPT::<ELOC>::ALL COMPLD
      " DS3OUT-<unit-slot>:OOS-FLT "
   ;
   ```

   - If the system shows the DS3OUT circuit pack is out-of-service fault (OOS-FLT), continue this procedure at Step 4.
   - If the system responds with any other state, stop here and call your system administrator or the next level of technical support.

4. Go to the DACS III-2000 frame and remove the DS3OUT circuit pack that was identified in Step 1. If you need detailed instructions, see Procedure 3-2, "Removing Circuit Packs."

5. Using standard office procedures, write down the

   — serial number of the removed DS3OUT circuit pack

   — unit and slot from which it was removed

   Set aside the removed DS3OUT circuit pack until the procedure instructs you to do something with it.

6. On the spare DS3OUT circuit pack, set the LBO to match those of the extracted DS3OUT circuit pack. If you need detailed instructions, see Procedure 3-6, "Setting Line Buildout."

7. Insert the spare DS3OUT circuit pack into the empty slot. If you need detailed instructions, see Procedure 3-1, "Installing Circuit Packs."

8. At the craft interface terminal, check to see if the previous steps have cleared the problem by entering:

   TEST-PATH-T3:::PAINTGRT;

The system responds with one of the following messages:

— For *Message Set 1*:

```
  <TID #n YY-MM-DD HH:MM:SS>
M  TEST PATH T3::::PAINTGRT COMPLD
   /* DS3_IN,DS3_OUT:LOC,CHAN_OUT:LOC,CHAN_IN,
         CHAN_OUT:LOC,CHAN_IN:TAG:RESULT */
   " <DS3_IN,DS3_OUT:LOC,CHAN_OUT:LOC,CHAN_IN,
         CHAN_OUT:LOC,CHAN_IN:TAG:RESULT> "
;
```

— For *Message Set 2*:

```
  <TID YY-MM-DD HH:MM:SS>
M  TEST PATH T3::::PAINTGRT COMPLD
   " <DS3_IN,DS3_OUT:LOC,CHAN_OUT:LOC,CHAN_IN,
         CHAN_OUT:LOC,CHAN_IN:TAG:RESULT> "
;
```

where

`LOC` = the DS3OUT circuit pack location

`RESULT` = the test results; `NULL` means that the test could not be run at the time it was requested, `PASS` means the specified path is fault-free, `FAIL` means the associated path is failed

Do one of the following:

- If the system responds with `NULL`, continue this procedure at Step 9.
- If the system responds with `PASS`, continue this procedure at Step 10.
- If the system responds with `FAIL`, continue this procedure at Step 11.

9. Having received a `NULL` response, check to see that *all* the statements that follow are true:

   a. The input and output unit controllers, associated with the DS3OUT circuit pack identified in Step 1, are in the in-service (`IS`) state.

   b. The protection switch circuit packs within the input unit, associated with the DS3OUT circuit pack identified in Step 1, are in the in-service (`IS`) state.

   c. The circuit packs along the failed path, associated with the DS3OUT circuit pack identified in Step 1, are present and provisioned and have no active failure conditions other than the PAINTGRT condition.

Do one of the following:

- If this is the first time you received the NULL response and all of the previous statements are *true*, you have a problem that needs to be reported to your system administrator or next level of technical support.
- If this is the first time you received the NULL response and any or all of the previous statements are *false*, correct the situation(s) and repeat Step 8 from the beginning.
- If this is the second time you've executed Step 8 and received the NULL response, stop here and call your system administrator or the next level of technical support.

10. Having received the PASS response, perform the following steps:

    a. Check the craft interface terminal for one of the following autonomous messages:

    — For *Message Set 1*:

```
  <TID #n YY-MM-DD HH:MM:SS>
A <ASEQ> REPT SW EQPT
    /* WORKING ENTITY,SWITCH DIRECTION */
    " <WORKING ENTITY>,WKG "
;
```

    — For *Message Set 2*:

```
  <TID YY-MM-DD HH:MM:SS>
A <ASEQ> REPT SW EQPT
    " <WORKING ENTITY>,WKG "
;
```

    where

    WORKING ENTITY = the DS3SW circuit pack identified in Step 1

    b. Verify that the DS3OUT and DS3SW circuit packs identified in Step 1 no longer generate alarms by entering the two commands that follow:

    RTRV-ALM-EQPT::ALL::,PAINTGRT;

    and

    RTRV-PATH-T3::ALL::PAINTGRT;

    In both system responses, the DS3OUT and DS3SW circuit packs identified in Step 1 should *not* appear in the message and the red LEDs should no longer be lighted.

    c. Verify a successful switch to working of the DS3SW circuit pack by entering:

    RTRV-STATE-EQPT::ELOC;

where

ELOC = the DS3SW circuit pack identified in Step 1

The system response should be one of the following messages:

— For *Message Set 1*:

```
  <TID #n YY-MM-DD HH:MM:SS>
M  RTRV STATE EQPT::<ELOC>::ALL COMPLD
   /* LOC:STATE */
   " <LOC>:ACT "
;
```

— For *Message Set 2*:

```
  <TID YY-MM-DD HH:MM:SS>
M  RTRV STATE EQPT::<ELOC>::ALL COMPLD
   " <LOC>:ACT "
;
```

where

LOC = the DS3SW circuit pack identified in Step 1

d. Using standard office procedures, label and record the DS3OUT circuit pack, set aside in Step 5, as failed and in need of repair. If you need instructions for returning a failed circuit pack, see Procedure 3-11, "Returning Circuit Packs for Repair."

e. You have successfully corrected the problem. If more alarms exist on the frame, return to Procedure 9-1, "How to Clear Alarms," to determine the next corrective action to take.

Checking the DS3SW Circuit Pack

11. Obtain a spare DS3SW (AWL1 or AYJ1) circuit pack.

    - If a spare circuit pack is not available, stop here and call your system administrator or the next level of technical support.
    - If a spare circuit pack is available, continue this procedure at Step 12.

12. At the craft interface terminal, verify that the DS3SW circuit pack is in the out-of-service fault (OOS-FLT) state by entering:

    RTRV-STATE-EQPT::ELOC::ALL;

    where

    ELOC = the DS3SW circuit pack identified in Step 1, specified as DS3SW-{1 through 4}-{1 through 16}

    The system should respond with one of the following messages:

— For *Message Set 1*:

```
  <TID #n YY-MM-DD HH:MM:SS>
M  RTRV STATE EQPT::<ELOC>::ALL COMPLD
   /* LOC:STATE */
   " DS3SW-<unit-slot>:OOS-FLT "
;
```

— For *Message Set 2*:

```
  <TID YY-MM-DD HH:MM:SS>
M  RTRV STATE EQPT::<ELOC>::ALL COMPLD
   " DS3SW-<unit-slot>:OOS-FLT "
;
```

- If the system shows the DS3SW circuit pack is out-of-service fault (OOS-FLT), continue this procedure at Step 13.
- If the system responds with any other state, stop here and call your system administrator or the next level of technical support.

13. At the craft interface terminal, verify that the protection circuit pack, related to the DS3SW circuit pack identified in Step 1, is in the active (ACT) state by entering:

RTRV-STATE-EQPT::ELOC::ALL;

where

ELOC = the protection pack, identified as DS3SW-1-16 for a 1024-size system; DS3SW-4-15&-16 for a 2048-size system

The system should respond with one of the following messages:

— For *Message Set 1*:

```
  <TID #n YY-MM-DD HH:MM:SS>
M  RTRV STATE EQPT::<ELOC>::ALL COMPLD
   /* LOC:STATE */
   " DS3SW-<unit-slot>:ACT"
;
```

— For *Message Set 2*:

```
  <TID YY-MM-DD HH:MM:SS>
M  RTRV STATE EQPT::<ELOC>::ALL COMPLD
   " DS3SW-<unit-slot>:ACT"
;
```

- If the system shows the protection circuit pack is active (ACT), continue this procedure at Step 14.
- If the system responds with any other state, stop here and call your system administrator or the next level of technical support.

14. Go to the DACS III-2000 frame and remove the DS3SW circuit pack that was identified in Step 1.
    - If you are working on a 1024-size frame and need detailed instructions, see Procedure 3-2, "Removing Circuit Packs."
    - If you are working on a 2048-size frame and need detailed instructions, see Procedure 3-4, "Removing DS3SWL CTR Circuit Packs."
15. Using standard office procedures, write down the
    — serial number of the removed DS3SW circuit pack
    — the slot from which it was removed

    Set aside the removed DS3SW circuit pack until the procedure instructs you to do something with it.
16. Insert the spare DS3SW circuit pack into the empty slot.
    - If you are working on a 1024-size frame and need detailed instructions, see Procedure 3-1, "Installing Circuit Packs."
    - If you are working on a 2048-size frame and need detailed instructions, see Procedure 3-3, "Installing DS3SWL CTR Circuit Packs."
17. At the craft interface terminal, check to see if the previous steps have cleared the problem by entering:

    TEST-PATH-T3::::PAINTGRT;

    The system responds with one of the following messages:

    — For *Message Set 1*:

```
  <TID #n YY-MM-DD HH:MM:SS>
M  TEST PATH T3::::PAINTGRT COMPLD
   /* DS3_IN,DS3_OUT:LOC,CHAN_OUT:LOC,CHAN_IN,
         CHAN_OUT:LOC,CHAN_IN:TAG:RESULT */
   " <DS3_IN,DS3_OUT:LOC,CHAN_OUT:LOC,CHAN_IN,
         CHAN_OUT:LOC,CHAN_IN:TAG:RESULT> "
;
```

    — For *Message Set 2*:

```
  <TID YY-MM-DD HH:MM:SS>
M  TEST PATH T3::::PAINTGRT COMPLD
   " <DS3_IN,DS3_OUT:LOC,CHAN_OUT:LOC,CHAN_IN,
         CHAN_OUT:LOC,CHAN_IN:TAG:RESULT> "
;
```

    where

    LOC = the DS3SW circuit pack location identified in Step 1, specified as DS3SW-{1 through 4}-{1 through 16}

RESULT = the test results; NULL means that the test could not be run at the time it was requested, PASS means the specified path is fault-free, FAIL means the associated path is failed

Do one of the following:

- If the system responds with NULL, continue this procedure at Step 18.
- If the system responds with PASS, continue this procedure at Step 19.
- If the system responds with FAIL, continue this procedure at Step 20.

18. Having received a NULL response, check to see that *all* the statements that follow are true:

    a. The input and output unit controllers, associated with the DS3OUT circuit pack identified in Step 1, are in the in-service (IS) state.

    b. The protection switch circuit packs within the input unit, associated with the DS3OUT circuit pack identified in Step 1, are in the in-service (IS) state.

    c. The circuit packs along the failed path, associated with the DS3OUT circuit pack identified in Step 1, are present and provisioned and have no active failure conditions other than the PAINTGRT condition.

    Do one of the following:

    - If this is the first time you received the NULL response and all of the previous statements are *true*, you have a problem that needs to be reported to your system administrator or next level of technical support.
    - If this is the first time you received the NULL response and any or all of the previous statements are *false*, correct the situation(s) and repeat Step 17 from the beginning.
    - If this is the second time you've executed Step 17 and received the NULL response, stop here and call your system administrator or the next level of technical support.

19. Having received the PASS response, perform the following steps:

    a. Check the craft interface terminal for one of the following autonomous messages:

— For *Message Set 1*:

```
  <TID #n YY-MM-DD HH:MM:SS>
A <ASEQ> REPT SW EQPT
  /* WORKING ENTITY,SWITCH DIRECTION */
  " <WORKING ENTITY>,WKG "
;
```

— For *Message Set 2*:

```
  <TID YY-MM-DD HH:MM:SS>
A <ASEQ> REPT SW EQPT
   " <WORKING ENTITY>,WKG "
;
```

where

`WORKING ENTITY` = the DS3SW circuit pack identified in Step 1

b. Verify that the DS3OUT and DS3SW circuit packs identified in Step 1 no longer generate alarms by entering the two commands that follow:

RTRV-ALM-EQPT::ALL::,PAINTGRT;

and

RTRV-PATH-T3::ALL::PAINTGRT;

In both system responses, the DS3OUT and DS3SW circuit packs identified in Step 1 should *not* appear in the message and the red LEDs should no longer be lighted.

c. Verify a successful switch to working of the DS3SW circuit pack identified in Step 1 by entering:

RTRV-STATE-EQPT::ELOC;

where

ELOC = the DS3SW circuit pack

The system output should be one of the following messages:

— For *Message Set 1*:

```
  <TID #n YY-MM-DD HH:MM:SS>
M  RTRV STATE EQPT::<ELOC>::ALL COMPLD
   /* LOC:STATE */
   " <LOC>:ACT "
;
```

— For *Message Set 2*:

```
  <TID YY-MM-DD HH:MM:SS>
M  RTRV STATE EQPT::<ELOC>::ALL COMPLD
   " <LOC>:ACT "
;
```

where

LOC = the DS3SW circuit pack identified in Step 1

- If the system shows the DS3SW circuit pack identified in Step 1 is active (ACT), continue this procedure at Step 19d.
- If the system responds with any other state, stop here and call your system administrator or the next level of technical support.

d. Using standard office procedures, label and record the DS3SW circuit pack, set aside in Step 15, as failed and in need of repair. If you need instructions for returning a failed circuit pack, see Procedure 3-11, "Returning Circuit Packs for Repair."

e. Since the original DS3OUT circuit pack is not at fault, it can be put in the spares storage cabinet for future use.

f. You have successfully corrected the problem. If more alarms exist on the frame, return to Procedure 9-1, "How to Clear Alarms," to determine the next corrective action to take.

Checking the Cables

20. Having received the FAIL response, identify the failed cable by entering:

RTRV-CABLE-T3::ALL::PAINTGRT;

The system responds with one of the following messages:

— For *Message Set 1*:

```
  <TID #n YY-MM-DD HH:MM:SS>
M  RTRV CABLE T3::::PAINTGRT COMPLD
   /* DS3IN,CABLE,PIN #:DS3SW_IN,CABLE,PIN #:
         DS3SW_OUT,CABLE,PIN #:DS3OUT,CABLE,PIN #
*/
    " <DS3IN,CABLE,PIN #:DS3SW_IN,CABLE,PIN #:
         DS3SW_OUT,CABLE,PIN #:DS3OUT,CABLE,PIN
#> "
;
```

— For *Message Set 2*:

```
  <TID YY-MM-DD HH:MM:SS>
M  RTRV CABLE T3::::PAINTGRT COMPLD
   " <DS3IN,CABLE,PIN #:DS3SW_IN,CABLE,PIN #:
         DS3SW_OUT,CABLE,PIN #:DS3OUT,CABLE,PIN
#> "
;
```

Be certain to note the cable that is associated with the DS3OUT circuit pack identified in Step 1. The numbers in the CABLE field, those starting with J,
correlate to the numbers on the octopus cable connectors attached to the backplane. The suspected cable segment will be that segment between the DS3 switch (DS3SW) module and the DS3 output interface (DS3OUT INTFC) module.

21. Make sure you have written down the cable's location for future use.

22. Wearing an ESD wrist strap, remove the backplane covers. Using the cable identification from Step 21, visually examine, at both ends, the cable that runs between the DS3SW module and the DS3OUT module.

23. Visually verify that the cable is correctly plugged in and that there are no offset, misaligned, or cocked connectors.

    - If you observe any of the above problems, continue this procedure at Step 24.
    - If you do *not* observe any problems with the cable, continue this procedure at Step 28.

24. Rectify the problem observed with the cable identified in Step 21.

25. At the craft interface terminal, check to see if the previous steps have cleared the problem by entering:

    TEST-PATH-T3::::PAINTGRT;

    The system responds with one of the following messages:

    — For *Message Set 1*:

```
  <TID #n YY-MM-DD HH:MM:SS>
M  TEST PATH T3:::PAINTGRT COMPLD
   /* DS3_IN,DS3_OUT:LOC,CHAN_OUT:LOC,CHAN_IN,
         CHAN_OUT:LOC,CHAN_IN:TAG:RESULT */
   " <DS3_IN,DS3_OUT:LOC,CHAN_OUT:LOC,CHAN_IN,
         CHAN_OUT:LOC,CHAN_IN:TAG:RESULT> "
;
```

— For *Message Set 2*:

```
  <TID YY-MM-DD HH:MM:SS>
M  TEST PATH T3:::PAINTGRT COMPLD
   " <DS3_IN,DS3_OUT:LOC,CHAN_OUT:LOC,CHAN_IN,
         CHAN_OUT:LOC,CHAN_IN:TAG:RESULT> "
;
```

where

LOC = the DS3OUT circuit pack location

RESULT = the test results; NULL means that the test could not be run at the time it was requested, PASS means the specified path is fault-free, FAIL means the associated path is failed

Do one of the following:

- If the system responds with NULL, continue this procedure at Step 26.
- If the system responds with PASS, continue this procedure at Step 27.
- If the system responds with FAIL, continue this procedure at Step 28.

26. Having received a NULL response, check to see that *all* the statements that follow are true:

    a. The input and output unit controllers, associated with the DS3OUT circuit pack identified in Step 1, are in the in-service (IS) state.

    b. The protection switch circuit packs within the input unit, associated with the DS3OUT circuit pack identified in Step 1, are in the in-service (IS) state.

    c. The circuit packs along the failed path, associated with the DS3OUT circuit pack identified in Step 1, are present and provisioned and have no active failure conditions other than the PAINTGRT condition.

    Do one of the following:

    - If this is the first time you received the NULL response and all of the previous statements are *true*, you have a problem that needs to be reported to your system administrator or next level of technical support.
    - If this is the first time you received the NULL response and any or all of the previous statements are *false*, correct the situation(s) and repeat Step 25 from the beginning.
    - If this is the second time you have executed Step 25 and received the NULL response, stop here and call your system administrator or the next level of technical support.

27. Having received the PASS response, perform the following steps:

    a. Check the craft interface terminal for one of the following autonomous messages:

    — For *Message Set 1*:

```
  <TID #n YY-MM-DD HH:MM:SS>
A <ASEQ> REPT SW EQPT
    /* WORKING ENTITY,SWITCH DIRECTION */
    " <WORKING ENTITY>,WKG "
;
```

    — For *Message Set 2*:

```
  <TID YY-MM-DD HH:MM:SS>
A <ASEQ> REPT SW EQPT
    " <WORKING ENTITY>,WKG "
;
```

    where

    WORKING ENTITY = the DS3SW circuit pack identified in Step 1

    b. Verify that the DS3OUT and DS3SW circuit packs identified in Step 1 no longer generate alarms by entering the two commands that follow:

    RTRV-ALM-EQPT::ALL::,PAINTGRT;

    and

    RTRV-PATH-T3::ALL::PAINTGRT;

    In both system responses, the DS3OUT and DS3SW circuit packs identified in Step 1 should *not* appear in the message and the red LEDs should no longer be lighted.

    c. Verify a successful switch to working of the DS3SW circuit pack by entering:

    RTRV-STATE-EQPT::ELOC;

    where

    ELOC = the DS3SW circuit pack identified in Step 1

    The system response should be one of the following messages:

    — For *Message Set 1*:

```
  <TID #n YY-MM-DD HH:MM:SS>
M  RTRV STATE EQPT::<ELOC>::ALL COMPLD
    /* LOC:STATE */
    " <LOC>:ACT "
;
```

— For *Message Set 2*:

```
  <TID YY-MM-DD HH:MM:SS>
M  RTRV STATE EQPT::<ELOC>::ALL COMPLD
   " <LOC>:ACT "
;
```

where

LOC = the DS3SW circuit pack identified in Step 1

d. Since the original DS3OUT and DS3SW circuit packs are not at fault, they can be put in the spares storage cabinet for future use.

e. Wearing an ESD wrist strap, reattach the backplane covers.

f. You have successfully corrected the problem. If more alarms exist on the frame, return to Procedure 9-1, "How to Clear Alarms," to determine the next corrective action to take.

28. Having arrived at this step because you did *not* observe cable problems in Step 25 or because you received the FAIL response in Step 27, call your system administrator or the next level of technical support to fix the cable. Note the number of this procedure and the number of the next step so that you can return to the correct location once the failed cable is repaired.

29. After the failed cable has been repaired by your system administrator or the next level of technical support, continue this procedure at Step 30.

30. At the craft interface terminal, verify that the problem has been corrected by entering:

TEST-PATH-T3::::PAINTGRT;

The system responds with one of the following messages:

— For *Message Set 1*:

```
  <TID #n YY-MM-DD HH:MM:SS>
M  TEST PATH T3::::PAINTGRT COMPLD
   /* DS3_IN,DS3_OUT:LOC,CHAN_OUT:LOC,CHAN_IN,
         CHAN_OUT:LOC,CHAN_IN:TAG:RESULT */
   " <DS3_IN,DS3_OUT:LOC,CHAN_OUT:LOC,CHAN_IN,
         CHAN_OUT:LOC,CHAN_IN:TAG:>PASS "
;
```

— For *Message Set 2*:

```
  <TID YY-MM-DD HH:MM:SS>
M  TEST PATH T3::::PAINTGRT COMPLD
   " <DS3_IN,DS3_OUT:LOC,CHAN_OUT:LOC,CHAN_IN,
         CHAN_OUT:LOC,CHAN_IN:TAG:>PASS "
;
```

31. Having received the PASS response, perform the following steps:

    a. Check the craft interface terminal for one of the following autonomous messages:

    — For *Message Set 1*:

```
  <TID #n YY-MM-DD HH:MM:SS>
A <ASEQ> REPT SW EQPT
   /* WORKING ENTITY,SWITCH DIRECTION */
   " <WORKING ENTITY>,WKG "
;
```

    — For *Message Set 2*:

```
  <TID YY-MM-DD HH:MM:SS>
A <ASEQ> REPT SW EQPT
   " <WORKING ENTITY>,WKG "
;
```

    where

    WORKING ENTITY = the DS3SW circuit pack identified in Step 1

    b. Verify that the DS3OUT and DS3SW circuit packs identified in Step 1 no longer generate alarms by entering the two commands that follow:

    RTRV-ALM-EQPT::ALL::,PAINTGRT;

    and

    RTRV-PATH-T3::ALL::PAINTGRT;

    In both system responses, the DS3OUT and DS3SW circuit packs identified in Step 1 should *not* appear in the message and the red LEDs should no longer be lighted.

    c. Verify a successful switch to working of the DS3SW circuit pack by entering:

    RTRV-STATE-EQPT::ELOC;

    where

    ELOC = the DS3SW circuit pack identified in Step 1

    The system response should be one of the following messages:

    — For *Message Set 1*:

```
  <TID #n YY-MM-DD HH:MM:SS>
M  RTRV STATE EQPT::<ELOC>::ALL COMPLD
   /* LOC:STATE */
   " <LOC>:ACT "
;
```

— For *Message Set 2*:

```
  <TID YY-MM-DD HH:MM:SS>
M  RTRV STATE EQPT::<ELOC>::ALL COMPLD
   " <LOC>:ACT "
;
```

where

LOC = the DS3SW circuit pack identified in Step 1

d. Since the original DS3OUT and DS3SW circuit packs are not at fault, they can be put in the spares storage cabinet for future use.

e. Wearing an ESD wrist strap, reattach the backplane covers.

f. You have successfully corrected the problem. If more alarms exist on the frame, return to Procedure 9-1, "How to Clear Alarms," to determine the next corrective action to take.

Procedure 11-9. DS3OUT:MJ,PAINTGRT, DS3OUT:MN,PAINTGRT, and DS3SW:MN,PAINTGRT Alarms with No Other DS3OUT or DS3SW Circuit Packs Showing PAINTGRT

Please note that there are two sections within Procedure 11-9; each section represents one possible source of the PAINTGRT condition:

- Checking the DS3OUT Circuit Pack
- Checking the Cables

Sometimes you will use the steps in both sections to clear the PAINTGRT condition; other times only the first or second sections will be needed. *However, regardless of the number of sections you use, the steps must be executed in the order presented.*

CAUTION:
Electrostatic discharge (ESD) damage.
ESD can cause damage to the components of a DACS III-2000 system. Wear an ESD wrist strap when working around the frame.

Checking the DS3OUT Circuit Pack

1. Have the system output from Procedure 11-1, in which you identified the affected DS3OUT and DS3SW circuit packs, available for referencing.

   If all non-PAINTGRT equipment alarms have been cleared, as instructed in Procedure 9-1, then the affected DS3OUT circuit pack, with an MJ alarm level, will be a protection pack (that is, P1/P2).

   This DS3OUT circuit pack (with the MJ alarm level) will be the DS3OUT pack that will be referenced throughout this procedure. All references in subsequent steps to the affected DS3OUT circuit pack refer to the pack with the MJ alarm, NOT the pack with the MN alarm.

WARNING:
Potential for service disruption.
Only two DS3OUT circuit packs and one DS3SW circuit pack, and no other types of circuit packs, should have an active PAINTGRT condition.
If more than these three circuit packs show PAINTGRT, do NOT execute this procedure. Return to Table 11-1, "PAINTGRT Decision Tree," check the "Additional Conditions" column, and select the appropriate procedure.

2. Obtain a spare DS3OUT (ARW2) circuit pack.
   - If a spare circuit pack is not available, stop here and call your system administrator or the next level of technical support.
   - If a spare circuit pack is available, continue this procedure at Step 3.
3. At the craft interface terminal, verify that the DS3OUT circuit pack is in the active fault (ACT-FLT) state by entering:

   RTRV-STATE-EQPT::ELOC::ALL;

   where

   ELOC = the DS3OUT circuit pack identified in Step 1, specified as DS3OUT-{1 through 8}-{P1/P2}

   The system should respond with one of the following messages:

   — For *Message Set 1*:

   ```
     <TID #n YY-MM-DD HH:MM:SS>
   M  RTRV STATE EQPT::<ELOC>::ALL COMPLD
      /* LOC:STATE */
      " DS3OUT-<unit-slot>:ACT-FLT "
   ;
   ```

   — For *Message Set 2*:

   ```
     <TID YY-MM-DD HH:MM:SS>
   M  RTRV STATE EQPT::<ELOC>::ALL COMPLD
      " DS3OUT-<unit-slot>:ACT-FLT "
   ;
   ```

   - If the system shows the DS3OUT circuit pack is active fault (ACT-FLT), continue this procedure at Step 4.
   - If the system responds with any other state, stop here and call your system administrator or the next level of technical support.
4. Go to the DACS III-2000 frame and remove the DS3OUT circuit pack that was identified in Step 1. If you need detailed instructions, see Procedure 3-2, "Removing Circuit Packs."
5. Using standard office procedures, write down the

   — serial number of the removed DS3OUT circuit pack

   — unit and slot from which it was removed

   Set aside the removed DS3OUT circuit pack until the procedure instructs you to do something with it.
6. On the spare DS3OUT circuit pack, set the LBO to match those of the extracted DS3OUT circuit pack. If you need detailed instructions, see Procedure 3-6, "Setting Line Buildout (LBO)."

7. Insert the spare DS3OUT circuit pack into the empty slot. If you need detailed instructions, see Procedure 3-1, "Installing Circuit Packs."

8. At the craft interface terminal, check to see if the previous steps have cleared the problem by entering:

   TEST-PATH-T3::::PAINTGRT;

   The system responds with one of the following messages:

   — For *Message Set 1*:

   ```
     <TID #n YY-MM-DD HH:MM:SS>
   M  TEST PATH T3::::PAINTGRT COMPLD
      /* DS3_IN,DS3_OUT:LOC,CHAN_OUT:LOC,CHAN_IN,
            CHAN_OUT:LOC,CHAN_IN:TAG:RESULT */
      " <DS3_IN,DS3_OUT:LOC,CHAN_OUT:LOC,CHAN_IN,
            CHAN_OUT:LOC,CHAN_IN:TAG:RESULT> "
   ;
   ```

   — For *Message Set 2*:

   ```
     <TID YY-MM-DD HH:MM:SS>
   M  TEST PATH T3::::PAINTGRT COMPLD
      " <DS3_IN,DS3_OUT:LOC,CHAN_OUT:LOC,CHAN_IN,
   CHAN_OUT:LOC,CHAN_IN:TAG:RESULT> "
   ;
   ```

   where

   LOC = the DS3OUT circuit pack location, identified in Step 1

   RESULT = the test results; NULL means that the test could not be run at the time it was requested, PASS means the specified path is fault-free, FAIL means the associated path is failed

NOTE:
More than one path may be tested, which would result in more than one RESULT being reported in the message. Make sure that the path you are observing is the one containing the DS3OUT circuit pack identified in Step 1.

Do one of the following:

- If the system responds with NULL, continue this procedure at Step 9.
- If the system responds with PASS, continue this procedure at Step 10.
- If the system responds with FAIL, continue this procedure at Step 11.

9. Having received a NULL response, check to see that *all* the statements that follow are true:

a. The input and output unit controllers, associated with the DS3OUT circuit pack identified in Step 1, are in the in-service (IS) state.

b. The protection switch circuit packs within the input unit, associated with the DS3OUT circuit pack identified in Step 1, are in the in-service (IS) state.

c. The circuit packs along the failed path, associated with the DS3OUT circuit pack identified in Step 1, are present and provisioned and have no active failure conditions other than the PAINTGRT condition.

Do one of the following:

- If this is the first time you received the NULL response and all of the previous statements are *true*, you have a problem that needs to be reported to your system administrator or next level of technical support.
- If this is the first time you received the NULL response and any or all of the previous statements are *false*, correct the situation(s) and repeat Step 8 from the beginning.
- If this is the second time you've executed Step 8 and received the NULL response, stop here and call your system administrator or the next level of technical support.

10. Having received the PASS response, perform the following steps:

a. Verify that the DS3OUT circuit pack identified in Step 1 no longer generates an alarm, by entering the two commands that follow:

```
RTRV-ALM-EQPT::ALL::,PAINTGRT;
```

and

```
RTRV-PATH-T3::ALL::PAINTGRT;
```

In both system responses, the DS3OUT circuit pack identified in Step 1 should *not* appear in the message.

b. Using standard office procedures, label and record the DS3OUT circuit pack, set aside in Step 5, as failed and in need of repair. If you need instructions for returning a failed circuit pack, see Procedure 3-11, "Returning Circuit Packs for Repair."

c. You have successfully corrected the problem. If more alarms exist on the frame, return to Procedure 9-1, "How to Clear Alarms," to determine the next corrective action to take.

Checking the Cables

11. Having received the FAIL response, identify the failed cable by entering:

    RTRV-CABLE-T3::ALL::PAINTGRT;

    The system responds with one of the following messages:

    — For *Message Set 1*:

    ```
      <TID #n YY-MM-DD HH:MM:SS>
    M  RTRV CABLE T3::::PAINTGRT COMPLD
       /* DS3IN,CABLE,PIN #:DS3SW_IN,CABLE,PIN #:
            DS3SW_OUT,CABLE,PIN #:DS3OUT,CABLE,PIN #
    */
       " <DS3IN,CABLE,PIN #:DS3SW_IN,CABLE,PIN #:
            DS3SW_OUT,CABLE,PIN #:DS3OUT,CABLE,PIN
    #> "
    ;
    ```

    — For *Message Set 2*:

    ```
      <TID YY-MM-DD HH:MM:SS>
    M  RTRV CABLE T3::::PAINTGRT COMPLD
       " <DS3IN,CABLE,PIN #:DS3SW_IN,CABLE,PIN #:
            DS3SW_OUT,CABLE,PIN #:DS3OUT,CABLE,PIN
    #> "
    ;
    ```

    Be certain to note the cable that is associated with the DS3OUT circuit pack identified in Step 1. The numbers in the CABLE field, those starting with J,
    correlate to the numbers on the octopus cable connectors attached to the backplane. The suspected cable segment will be that segment between the DS3 switch (DS3SW) module and the DS3 output interface (DS3OUT INTFC) module.

12. Make sure you have written down the cable's location for future use.

13. Wearing an ESD wrist strap, remove the backplane covers. Using the cable identification from Step 12, visually examine, at both ends, the cable that runs between the DS3SW module and the DS3OUT module.

14. Visually verify that the cable is correctly plugged in and that there are no offset, misaligned, or cocked connectors.

    - If you observe any of the above problems, continue this procedure at Step 15.
    - If you do *not* observe any problems with the cable, continue this procedure at Step 19.

15. Rectify the problem observed with the cable identified in Step 12.

16. At the craft interface terminal, check to see if the previous steps have cleared the problem by entering:

    TEST-PATH-T3::::PAINTGRT;

    The system responds with one of the following messages:

    — For *Message Set 1*:

    ```
      <TID #n YY-MM-DD HH:MM:SS>
    M  TEST PATH T3:::PAINTGRT COMPLD
       /* DS3_IN,DS3_OUT:LOC,CHAN_OUT:LOC,CHAN_IN,
             CHAN_OUT:LOC,CHAN_IN:TAG:RESULT */
       " <DS3_IN,DS3_OUT:LOC,CHAN_OUT:LOC,CHAN_IN,
             CHAN_OUT:LOC,CHAN_IN:TAG:RESULT> "
    ;
    ```

    — For *Message Set 2*:

    ```
      <TID YY-MM-DD HH:MM:SS>
    M  TEST PATH T3:::PAINTGRT COMPLD
       " <DS3_IN,DS3_OUT:LOC,CHAN_OUT:LOC,CHAN_IN,
             CHAN_OUT:LOC,CHAN_IN:TAG:RESULT> "
    ;
    ```

    where

    LOC = the DS3OUT circuit pack location, identified in Step 1

    RESULT = the test results; NULL means that the test could not be run at the time it was requested, PASS means the specified path is fault-free, FAIL means the associated path is failed

NOTE:
More than one path may be tested, which would result in more than one RESULT being reported in the message. Make sure that the path you are observing is the one containing the DS3OUT circuit pack identified in Step 1.

Do one of the following:

- If the system responds with NULL, continue this procedure at Step 17.
- If the system responds with PASS, continue this procedure at Step 18.
- If the system responds with FAIL, continue this procedure at Step 19.

17. Having received a NULL response, check to see that *all* the statements that follow are true:

    a. The input and output unit controllers, associated with the DS3OUT circuit pack identified in Step 1, are in the in-service (IS) state.

b. The protection switch circuit packs within the input unit, associated with the DS3OUT circuit pack identified in Step 1, are in the in-service (IS) state.

c. The circuit packs along the failed path, associated with the DS3OUT circuit pack identified in Step 1, are present and provisioned and have no active failure conditions other than the PAINTGRT condition.

Do one of the following:

- If this is the first time you received the NULL response and all of the previous statements are *true*, you have a problem that needs to be reported to your system administrator or next level of technical support.
- If this is the first time you received the NULL response and any or all of the previous statements are *false*, correct the situation(s) and repeat Step 16 from the beginning.
- If this is the second time you have executed Step 16 and received the NULL response, stop here and call your system administrator or the next level of technical support.

18. Having received the PASS response, perform the following steps:

    a. Verify that the DS3OUT circuit pack identified in Step 1 no longer generates an alarm, by entering the two commands that follow:

    RTRV-ALM-EQPT::ALL::,PAINTGRT;

    and

    RTRV-PATH-T3::ALL::PAINTGRT;

    In both system responses, the DS3OUT circuit pack identified in Step 1 should *not* appear in the message and the red LED should no longer be lighted.

    b. Since the original DS3OUT circuit pack is not at fault, it can be put in the spares storage cabinet for future use.

    c. Wearing an ESD wrist strap, reattach the backplane covers.

    d. You have successfully corrected the problem. If more alarms exist on the frame, return to Procedure 9-1, "How to Clear Alarms," to determine the next corrective action to take.

19. Having arrived at this step because you did *not* observe cable problems in Step 14 or because you received the FAIL response in Step 16, call your system administrator or the next level of technical support to fix the cable. Note the number of this procedure and the number of the next step so that you can return to the correct location once the failed cable is repaired.

20. After the failed cable has been repaired by your system administrator or the next level of technical support, continue this procedure at Step 21.

21. At the craft interface terminal, verify that the problem has been corrected by entering:

    TEST-PATH-T3::::PAINTGRT;

    The system responds with one of the following messages:

    — For *Message Set 1*:

    ```
      <TID #n YY-MM-DD HH:MM:SS>
    M  TEST PATH T3::::PAINTGRT COMPLD
       /* DS3_IN,DS3_OUT:LOC,CHAN_OUT:LOC,CHAN_IN,
             CHAN_OUT:LOC,CHAN_IN:TAG:RESULT */
       " <DS3_IN,DS3_OUT:LOC,CHAN_OUT:LOC,CHAN_IN,
             CHAN_OUT:LOC,CHAN_IN:TAG:>PASS "
    ;
    ```

    — For *Message Set 2*:

    ```
      <TID YY-MM-DD HH:MM:SS>
    M  TEST PATH T3::::PAINTGRT COMPLD
       " <DS3_IN,DS3_OUT:LOC,CHAN_OUT:LOC,CHAN_IN,
             CHAN_OUT:LOC,CHAN_IN:TAG:>PASS "
    ;
    ```

22. Verify that the system output is PASS. Having received the PASS response, perform the following steps:

    a. Verify that the DS3OUT circuit pack identified in Step 1 no longer generates an alarm, by entering the two commands that follow:

       RTRV-ALM-EQPT::ALL::,PAINTGRT;

       and

       RTRV-PATH-T3::ALL::PAINTGRT;

       In both system responses, the DS3OUT circuit pack identified in Step 1 should *not* appear in the message and the red LED should no longer be lighted.

    b. Since the original DS3OUT circuit pack is not at fault, it can be put in the spares storage cabinet for future use.

    c. Wearing an ESD wrist strap, reattach the backplane covers.

    d. You have successfully corrected the problem. If more alarms exist on the frame, return to Procedure 9-1, "How to Clear Alarms," to determine the next corrective action to take.

Procedure 11-10. DS3SW:MN,PAINTGRT Alarm with No DS3IN or DS3OUT Circuit Packs or Other DS3SW Circuit Packs Showing PAINTGRT

Please note that there are four sections within Procedure 11-10; each section represents one possible source of the PAINTGRT condition:

- Checking the DS3SW Circuit Pack
- Checking the DS3IN Circuit Pack
- Checking the DS3OUT Circuit Pack
- Checking the Cables

Sometimes you will use the steps in all four sections to clear the PAINTGRT condition; other times only some of the sections will be needed. *However, regardless of the number of sections you use, the steps must be executed in the order presented.*

CAUTION:
Electrostatic discharge (ESD) damage.
ESD can cause damage to the components of a DACS III-2000 system. Wear an ESD wrist strap when working around the frame.

Checking the DS3SW Circuit Pack

1. Have the system output from Procedure 11-1, in which you identified the affected DS3SW circuit pack, available for referencing.

WARNING:
Potential for service disruption.
Only one DS3SW circuit pack, and no other types of circuit packs, should have an active PAINTGRT condition. If more than one circuit pack shows PAINTGRT, do NOT execute this procedure. Return to Table 11-1, "PAINTGRT Decision Tree," check the "Additional Conditions" column, and select the appropriate procedure.

2. Check for the DS3IN and DS3OUT circuit packs associated with the PAINTGRT condition by entering:

   ```
   RTRV-PATH-T3::ALL::PAINTGRT;
   ```

   The system should respond with one of the following messages:

— For *Message Set 1*:

```
  <TID #n YY-MM-DD HH:MM:SS>
M  RTRV PATH T3::: COMPLD
   /* DS3_IN,DS3_OUT:LOC,CHAN_OUT:LOC,CHAN_IN,
          CHAN_OUT:LOC,CHAN_IN */
   " <DS3_IN,DS3_OUT:LOC,CHAN_OUT:LOC,CHAN_IN,
          CHAN_OUT:LOC,CHAN_IN> "
;
```

— For *Message Set 2*:

```
  <TID YY-MM-DD HH:MM:SS>
M  RTRV PATH T3::: COMPLD
   " <DS3_IN,DS3_OUT:LOC,CHAN_OUT:LOC,CHAN_IN,
          CHAN_OUT:LOC,CHAN_IN> "
;
```

- If the system responds with COMPLD, perform the following steps:

  a. Write down the location of the DS3IN circuit pack identified in the message. The first LOC parameter shows the DS3IN location, specified as DS3IN-{1 through 8}-{1 through 30,P1,P2}.

     Remember, when you look at the frame this DS3IN circuit pack will *not* have a lighted red LED.

  b. Write down the location of the DS3OUT circuit pack identified in the message. The third *LOC* parameter shows the DS3OUT location, specified as DS3OUT-{1 through 8}-{1 through 30,P1,P2}.

     Remember, when you look at the frame this DS3OUT circuit pack will *not* have a lighted red LED.

  c. Continue this procedure at Step 3.

- If the system responds with DENY, stop here and call your system administrator or the next level of technical support.

3. Obtain a spare DS3SW (AWL1 or AYJ1) circuit pack.

   - If a spare circuit pack is not available, stop here and call your system administrator or the next level of technical support.
   - If a spare circuit pack is available, continue this procedure at Step 4.

4. At the craft interface terminal, verify that the DS3SW circuit pack is in the out-of-service fault (OOS-FLT) state by entering:

   RTRV-STATE-EQPT::ELOC::ALL;

where

ELOC = the DS3SW circuit pack identified in Step 1, specified as DS3SW-{1 through 4}-{1 through 16}

The system should respond with one of the following messages:

— For *Message Set 1*:

```
  <TID #n YY-MM-DD HH:MM:SS>
M  RTRV STATE EQPT::<ELOC>::ALL COMPLD
   /* LOC:STATE */
   " DS3SW-<unit-slot>:OOS-FLT "
;
```

— For *Message Set 2*:

```
  <TID YY-MM-DD HH:MM:SS>
M  RTRV STATE EQPT::<ELOC>::ALL COMPLD
   " DS3SW-<unit-slot>:OOS-FLT "
;
```

- If the system shows the DS3SW circuit pack is out-of-service fault (OOS-FLT), continue this procedure at Step 5.
- If the system responds with any other state, stop here and call your system administrator or the next level of technical support.

5. At the craft interface terminal, verify that the related protection circuit pack is in the active (ACT) state by entering:

RTRV-STATE-EQPT::ELOC::ALL;

where

ELOC = the protection pack; identified as DS3SW-1-16 for a 1024-size system; DS3SW-4-15&-16 for a 2048-size system.

The system should respond with one of the following messages:

— For *Message Set 1*:

```
  <TID #n YY-MM-DD HH:MM:SS>
M  RTRV STATE EQPT::<ELOC>::ALL COMPLD
   /* LOC:STATE */
   " <LOC>,ACT"
;
```

— For *Message Set 2*:

```
  <TID YY-MM-DD HH:MM:SS>
M  RTRV STATE EQPT::<ELOC>::ALL COMPLD
   " <LOC>,ACT"
;
```

- If the system shows the protection circuit pack is active (ACT), continue this procedure at Step 6.
- If the system responds with any other state, stop here and call your system administrator or the next level of technical support.

6. Go to the DACS III-2000 frame and remove the DS3SW circuit pack that was identified in Step 1.
   - If you are working on a 1024-size frame and need detailed instructions, see Procedure 3-2, "Removing Circuit Packs."
   - If you are working on a 2048-size frame and need detailed instructions, see Procedure 3-4, "Removing DS3SWL CTR Circuit Packs."
7. Using standard office procedures, write down the
   — serial number of the removed DS3SW circuit pack
   — the slot from which it was removed

   Set aside the removed DS3SW circuit pack until the procedure instructs you to do something with it.
8. Insert the spare DS3SW circuit pack into the empty slot.
   - If you are working on a 1024-size frame and need detailed instructions, see Procedure 3-1, "Installing Circuit Packs."
   - If you are working on a 2048-size frame and need detailed instructions, see Procedure 3-3, "Installing DS3SWL CTR Circuit Packs."
9. At the craft interface terminal, check to see if the previous steps have cleared the problem by entering:

   TEST-PATH-T3::::PAINTGRT;

   The system responds with one of the following messages:

   — For *Message Set 1*:

```
  <TID #n YY-MM-DD HH:MM:SS>
M  TEST PATH T3::::PAINTGRT COMPLD
   /* DS3_IN,DS3_OUT:LOC,CHAN_OUT:LOC,CHAN_IN,
         CHAN_OUT:LOC,CHAN_IN:TAG:RESULT */
   " <DS3_IN,DS3_OUT:LOC,CHAN_OUT:LOC,CHAN_IN,
         CHAN_OUT:LOC,CHAN_IN:TAG:RESULT> "
;
```

   — For *Message Set 2*:

```
  <TID YY-MM-DD HH:MM:SS>
M  TEST PATH T3::::PAINTGRT COMPLD
   " <DS3_IN,DS3_OUT:LOC,CHAN_OUT:LOC,CHAN_IN,
         CHAN_OUT:LOC,CHAN_IN:TAG:RESULT> "
;
```

where

LOC = the DS3SW circuit pack location identified in Step 1, specified as DS3SW-{1 through 4}-{1 through 16}

RESULT = the test results; NULL means that the test could not be run at the time it was requested, PASS means the specified path is fault-free, FAIL means the associated path is failed

Do one of the following:

- If the system responds with NULL, continue this procedure at Step 10.
- If the system responds with PASS, continue this procedure at Step 11.
- If the system responds with FAIL, continue this procedure at Step 12.

10. Having received a NULL response, check to see that *all* the statements that follow are true:

    a. The input and output unit controllers, associated with the DS3IN and DS3OUT circuit packs identified in Step 2, are in the in-service (IS) state.

    b. The protection switch circuit packs within the input unit, associated with the DS3IN circuit pack identified in Step 2, are in the in-service (IS) state.

    c. The DS3IN and DS3OUT circuit packs identified in Step 2 are present and provisioned and have no active failure conditions other than the PAINTGRT condition.

    d. The input port, associated with the DS3IN circuit pack identified in Step 2, has a valid incoming DS3 signal present.

    Do one of the following:

    - If this is the first time you received the NULL response and all of the previous statements are *true*, you have a problem that needs to be reported to your system administrator or next level of technical support.
    - If this is the first time you received the NULL response and any or all of the previous statements are *false*, correct the situation(s) and repeat Step 9 from the beginning.
    - If this is the second time you've executed Step 9 and received the NULL response, stop here and call your system administrator or the next level of technical support.

11. Having received the PASS response, perform the following steps:

    a. Check the craft interface terminal for one of the following autonomous messages:

    — For *Message Set 1*:

```
  <TID #n YY-MM-DD HH:MM:SS>
A <ASEQ> REPT SW EQPT
    /* WORKING ENTITY,SWITCH DIRECTION */
    " <WORKING ENTITY>,WKG "
;
```

    — For *Message Set 2*:

```
  <TID YY-MM-DD HH:MM:SS>
A <ASEQ> REPT SW EQPT
    " <WORKING ENTITY>,WKG "
;
```

    where

    WORKING ENTITY = the DS3SW circuit pack identified in Step 1

    b. Verify that the DS3SW circuit pack identified in Step 1 no longer generates an alarm, by entering the two commands that follow:

    RTRV-ALM-EQPT::ALL::,PAINTGRT;

    and

    RTRV-PATH-T3::ALL::PAINTGRT;

    In both system responses, the DS3SW circuit pack identified in Step 1 should *not* appear in the message and the red LED should no longer be lighted.

    c. Using standard office procedures, label and record the DS3SW circuit pack, set aside in Step 7, as failed and in need of repair. If you need instructions for returning a failed circuit pack, see Procedure 3-11, "Returning Circuit Packs for Repair."

    d. You have successfully corrected the problem. If more alarms exist on the frame, return to Procedure 9-1, "How to Clear Alarms," to determine the next corrective action to take.

Checking the DS3IN Circuit Pack

12. Obtain a spare DS3IN (ARW1) circuit pack.

    - If a spare DS3IN circuit pack is *not* available, stop here and call your system administrator or the next level of technical support.
    - If you have a spare DS3IN circuit pack *and* the DS3IN circuit pack identified in Step 2 is *not* a protection circuit pack, continue this procedure at Step 13.

- If you have a spare DS3IN circuit pack *and* the DS3IN circuit pack identified in Step 2 *is* a protection circuit pack, continue this procedure at Step 14.

13. Switch the DS3IN circuit pack to protection by entering:

    SW-TOPROTN-EQPT::ELOC;

    where

    ELOC = the DS3IN circuit pack identified in Step 2, specified as DS3IN-{1 through 8}-{1 through 30}

14. Go to the DACS III-2000 frame and remove the DS3IN circuit pack that was identified in Step 2. If you need detailed instructions, see Procedure 3-2, "Removing Circuit Packs."

15. Using standard office procedures, write down the

    — serial number of the removed DS3IN circuit pack

    — unit and slot from which it was removed

    Set aside the removed DS3IN circuit pack until the procedure instructs you to do something with it.

16. Insert the spare DS3IN circuit pack into the empty slot. If you need detailed instructions, see Procedure 3-1, "Installing Circuit Packs."

17. At the craft interface terminal, check to see if the previous steps have cleared the problem by entering:

    TEST-PATH-T3::::PAINTGRT;

    The system responds with one of the following messages:

    — For *Message Set 1*:

    ```
      <TID #n YY-MM-DD HH:MM:SS>
    M  TEST PATH T3::::PAINTGRT COMPLD
       * DS3_IN,DS3_OUT:LOC,CHAN_OUT:LOC,CHAN_IN,
             CHAN_OUT:LOC,CHAN_IN:TAG:RESULT */
       " <DS3_IN,DS3_OUT:LOC,CHAN_OUT:LOC,CHAN_IN,
             CHAN_OUT:LOC,CHAN_IN:TAG:RESULT> "
    ;
    ```

    — For *Message Set 2*:

    ```
      <TID YY-MM-DD HH:MM:SS>
    M  TEST PATH T3::::PAINTGRT COMPLD
       " <DS3_IN,DS3_OUT:LOC,CHAN_OUT:LOC,CHAN_IN,
             CHAN_OUT:LOC,CHAN_IN:TAG:RESULT> "
    ;
    ```

    where

LOC = the DS3SW circuit pack location identified in Step 1, specified as DS3SW-{1 through 4}-{1 through 16}.

RESULT = the test results; NULL means that the test could not be run at the time it was requested, PASS means the specified path is fault-free, FAIL means the associated path is failed

Do one of the following:

- If the system responds with NULL, continue this procedure at Step 18.
- If the system responds with PASS, continue this procedure at Step 19.
- If the system responds with FAIL, continue this procedure at Step 20.

18. Having received a NULL response, check to see that *all* the statements that follow are true:

    a. The input and output unit controllers, associated with the DS3IN and DS3OUT circuit packs identified in Step 2, are in the in-service (IS) state.

    b. The protection switch circuit packs within the input unit, associated with the DS3IN circuit pack identified in Step 2, are in the in-service (IS) state.

    c. The DS3IN and DS3OUT circuit packs identified in Step 2 are present and provisioned and have no active failure conditions other than the PAINTGRT condition.

    d. The input port, associated with the DS3IN circuit pack identified in Step 2, has a valid incoming DS3 signal present.

    Do one of the following:

    - If this is the first time you received the NULL response and all of the previous statements are *true*, you have a problem that needs to be reported to your system administrator or next level of technical support.
    - If this is the first time you received the NULL response and any or all of the previous statements are *false*, correct the situation(s) and repeat Step 17 from the beginning.
    - If this is the second time you have executed Step 17 and received the NULL response, stop here and call your system administrator or the next level of technical support.

19. Having received the PASS response, perform the following steps:

    a. Check the craft interface terminal for one of the following autonomous messages:

— For *Message Set 1*:

```
  <TID #n YY-MM-DD HH:MM:SS>
A <ASEQ> REPT SW EQPT
   /* WORKING ENTITY,SWITCH DIRECTION */
  " <WORKING ENTITY>,WKG "
;
```

— For *Message Set 2*:

```
  <TID YY-MM-DD HH:MM:SS>
A <ASEQ> REPT SW EQPT
   " <WORKING ENTITY>,WKG "
;
```

where

WORKING ENTITY = the DS3SW circuit pack identified in Step 1

b. Verify that the DS3SW circuit pack identified in Step 1 no longer generates an alarm, by entering the two commands that follow:

RTRV-ALM-EQPT::ALL::,PAINTGRT;

and

RTRV-PATH-T3::ALL::PAINTGRT;

In both system responses, the DS3SW circuit pack identified in Step 1 should *not* appear in the message and the red LED should no longer be lighted.

- If the DS3IN circuit pack identified in Step 2 is *not* a protection circuit pack, continue this procedure at Step 19c.
- If the DS3IN circuit pack identified in Step 2 *is* a protection circuit pack, continue this procedure at Step 19e.

c. At the craft interface terminal, switch the DS3IN to a working state by entering:

ALW-SW-EQPT::ELOC::WKG;

where

ELOC = the DS3IN circuit pack location identified in Step 2, specified by DS3IN-{1 through 8}-{1 through 30}

d. Verify a successful switch to working of the DS3IN circuit pack identified in Step 2 by entering:

RTRV-STATE-EQPT::ELOC;

where

ELOC = the DS3IN circuit pack

The system output should be one of the following messages:

— For *Message Set 1*:

```
  <TID #n YY-MM-DD HH:MM:SS>
M  RTRV STATE EQPT::<ELOC>::ALL COMPLD
   /* LOC:STATE */
   " <LOC>,ACT "
;
```

— For *Message Set 2*:

```
  <TID YY-MM-DD HH:MM:SS>
M  RTRV STATE EQPT::<ELOC>::ALL COMPLD
   " <LOC>,ACT "
;
```

where

LOC = the DS3IN circuit pack identified in Step 2

- If the system shows the DS3IN circuit pack identified in Step 2 is active (ACT), continue this procedure at Step 19e.
- If the system responds with any other state, stop here and call your system administrator or the next level of technical support.

e. Using standard office procedures, label and record the DS3IN circuit pack, set aside in Step 15, as failed and in need of repair. If you need instructions for returning a failed circuit pack, see Procedure 3-11, "Returning Circuit Packs for Repair."

f. Since the original DS3SW circuit pack is not at fault, it can be put in the spares storage cabinet for future use.

g. You have successfully corrected this problem. If more alarms exist on the frame, return to Procedure 9-1, "How to Clear Alarms," to determine the next corrective action to take.

Checking the DS3OUT Circuit Pack

20. At the craft interface terminal, switch the DS3IN to a working state by entering:

ALW-SW-EQPT::ELOC::WKG;

where

ELOC = the DS3IN circuit pack location identified in Step 2, specified by DS3IN-{1 through 8}-{1 through 30}

21. Verify a successful switch to working of the DS3IN circuit pack identified in Step 2 by entering:

    RTRV-STATE-EQPT::ELOC;

    where

    ELOC = the DS3IN circuit pack The system output should be one of the following messages:

    — For *Message Set 1*:

    ```
      <TID #n YY-MM-DD HH:MM:SS>
    M  RTRV STATE EQPT::<ELOC>::ALL COMPLD
       /* LOC:STATE */
       " <LOC>,ACT "
    ;
    ```

    — For *Message Set 2*:

    ```
      <TID YY-MM-DD HH:MM:SS>
    M  TRV STATE EQPT::<ELOC>::ALL COMPLD
       " <LOC>,ACT "
    ;
    ```

    where

    LOC = the DS3IN circuit pack identified in Step 2

    - If the system shows the DS3IN circuit pack identified in Step 2 is active (ACT), continue this procedure at Step 22.
    - If the system responds with any other state, stop here and call your system administrator or the next level of technical support.

22. Obtain a spare DS3OUT (ARW2) circuit pack.

    - If a spare circuit pack is *not* available, stop here and call your system administrator or the next level of technical support.
    - If you have a spare DS3OUT circuit pack *and* the DS3OUT circuit pack identified in Step 2 is *not* a protection circuit pack, continue this procedure at Step 23.
    - If you have a spare DS3OUT circuit pack *and* the DS3OUT circuit pack identified in Step 2 *is* a protection circuit pack, continue this procedure at Step 24.

23. Switch the DS3OUT circuit pack to protection by entering:

    SW-TOPROTN-EQPT::ELOC;

    where

    ELOC = the DS3OUT circuit pack identified in Step 2, specified as DS3OUT-{1 through 8}-{1 through 30}

24. Go to the DACS III-2000 frame and remove the DS3OUT circuit pack that was identified in Step 2. If you need detailed instructions, see Procedure 3-2, "Removing Circuit Packs."

25. Using standard office procedures, write down the

    — serial number of the removed DS3OUT circuit pack

    — unit and slot from which it was removed

    Set aside the removed DS3OUT circuit pack until the procedure instructs you to do something with it.

26. On the spare DS3OUT circuit pack, set the LBO to match those of the extracted DS3OUT circuit pack. If you need detailed instructions, see Procedure 3-6, "Setting Line Buildout (LBO)."

27. Insert the spare DS3OUT circuit pack into the empty slot. If you need detailed instructions, see Procedure 3-1, "Installing Circuit Packs."

28. At the craft interface terminal, check to see if the previous steps have cleared the problem by entering:

    TEST-PATH-T3::::PAINTGRT;

    The system responds with one of the following messages:

    — For *Message Set 1*:

```
  <TID #n YY-MM-DD HH:MM:SS>
M  TEST PATH T3::::PAINTGRT COMPLD
   /* DS3_IN,DS3_OUT:LOC,CHAN_OUT:LOC,CHAN_IN,
         CHAN_OUT:LOC,CHAN_IN:TAG:RESULT */
   " <DS3_IN,DS3_OUT:LOC,CHAN_OUT:LOC,CHAN_IN,
         CHAN_OUT:LOC,CHAN_IN:TAG:RESULT> "
;
```

    — For *Message Set 2*:

```
  <TID YY-MM-DD HH:MM:SS>
M  TEST PATH T3::::PAINTGRT COMPLD
   " <DS3_IN,DS3_OUT:LOC,CHAN_OUT:LOC,CHAN_IN,
         CHAN_OUT:LOC,CHAN_IN:TAG:RESULT> "
;
```

    where

    LOC = the DS3SW circuit pack location identified in Step 1, specified as DS3SW-{1 through 4}-{1 through 16}

    RESULT = the test results; NULL means that the test could not be run at the time it was requested, PASS means the specified path is fault-free, FAIL means the associated path is failed

Do one of the following:

- If the system responds with NULL, continue this procedure at Step 29.
- If the system responds with PASS, continue this procedure at Step 30.
- If the system responds with FAIL, continue this procedure at Step 31.

29. Having received a NULL response, check to see that *all* the statements that follow are true:

    a. The input and output unit controllers, associated with the DS3IN and DS3OUT circuit packs identified in Step 2, are in the in-service (IS) state.

    b. The protection switch circuit packs within the input unit, associated with the DS3IN circuit pack identified in Step 2, are in the in-service (IS) state.

    c. The DS3IN and DS3OUT circuit packs identified in Step 2 are present and provisioned and have no active failure conditions other than the PAINTGRT condition.

    d. The input port, associated with the DS3OUT circuit pack identified in Step 2, has a valid incoming DS3 signal present.

    Do one of the following:

    - If this is the first time you received the NULL response and all of the previous statements are *true*, you have a problem that needs to be reported to your system administrator or next level of technical support.
    - If this is the first time you received the NULL response and any or all of the previous statements are *false*, correct the situation(s) and repeat Step 28 from the beginning.
    - If this is the second time you've executed Step 28 and received the NULL response, stop here and call your system administrator or the next level of technical support.

30. Having received the PASS response, perform the following steps:

    a. Check the craft interface terminal for one of the following autonomous messages:

    — For *Message Set 1*:

```
  <TID #n YY-MM-DD HH:MM:SS>
A <ASEQ> REPT SW EQPT
    /* WORKING ENTITY,SWITCH DIRECTION */
    " <WORKING ENTITY>,WKG "
;
```

— For *Message Set 2*:

```
  <TID YY-MM-DD HH:MM:SS>
A <ASEQ> REPT SW EQPT
   " <WORKING ENTITY>,WKG "
;
```

where

WORKING ENTITY = the DS3SW circuit pack identified in Step 1

b. Verify that the DS3SW circuit pack identified in Step 1 no longer generates an alarm, by entering the two commands that follow:

RTRV-ALM-EQPT::ALL::,PAINTGRT;

and

RTRV-PATH-T3::ALL::PAINTGRT;

In both system responses, the DS3SW circuit pack identified in Step 1 should *not* appear in the message, and the red LED should no longer be lighted.

- If the DS3OUT circuit pack identified in Step 2 is *not* a protection circuit pack, continue this procedure at Step 30c.
- If the DS3OUT circuit pack identified in Step 2 *is* a protection circuit pack, continue this procedure at Step 30e.

c. At the craft interface terminal, switch the DS3OUT to a working state by entering:

ALW-SW-EQPT::ELOC::WKG;

where

ELOC = the DS3OUT circuit pack location identified in Step 2; specified by DS3OUT-{1 through 8}-{1 through 30}

d. Verify a successful switch to working of the DS3OUT circuit pack identified in Step 2 by entering:

RTRV-STATE-EQPT::ELOC;

where

ELOC = the DS3OUT circuit pack The system output should be one of the following messages:

— For *Message Set 1*:

```
  <TID #n YY-MM-DD HH:MM:SS>
M  RTRV STATE EQPT::<ELOC>::ALL COMPLD
   /* LOC:STATE */
   " <LOC>,ACT "
;
```

— For *Message Set 2*:

```
  <TID YY-MM-DD HH:MM:SS>
M  TRV STATE EQPT::<ELOC>::ALL COMPLD
   " <LOC>,ACT "
;
```

LOC = the DS3OUT circuit pack identified in Step 2

- If the system shows the DS3OUT circuit pack identified in Step 2 is active (ACT), continue this procedure at Step 28e.
- If the system responds with any other state, stop here and call your system administrator or the next level of technical support.

e. Using standard office procedures, label and record the DS3OUT circuit pack, set aside in Step 25, as failed and in need of repair. If you need instructions for returning a failed circuit pack, see Procedure 3-11, "Returning Circuit Packs for Repair."

f. Since the original DS3SW and DS3IN circuit packs are not at fault, they can be put in the spares storage cabinet for future use.

g. You have successfully corrected the problem. If more alarms exist on the frame, return to Procedure 9-1, "How to Clear Alarms," to determine the next corrective action to take.

Checking the Cables

31. Having received the FAIL response, at the craft interface terminal, switch the DS3OUT to a working state by entering:

    ALW-SW-EQPT::ELOC::WKG;

    where

    ELOC = the DS3OUT circuit pack location identified in Step 2, specified by DS3OUT-{1 through 8}-{1 through 30}

32. Verify a successful switch to working of the DS3OUT circuit pack identified in Step 2 by entering:

    RTRV-STATE-EQPT::ELOC;

    where

    ELOC = the DS3OUT circuit pack

The system output should be one of the following messages:

— For *Message Set 1*:

```
  <TID #n YY-MM-DD HH:MM:SS>
M  RTRV STATE EQPT::<ELOC>::ALL COMPLD
   /* LOC:STATE */
   " <LOC>,ACT "
;
```

— For *Message Set 2*:

```
  <TID YY-MM-DD HH:MM:SS>
M  RTRV STATE EQPT::<ELOC>::ALL COMPLD
" <LOC>,ACT "
;
```

LOC = the DS3OUT circuit pack identified in Step 2

- If the system shows the DS3OUT circuit pack identified in Step 2 is active (ACT), continue this procedure at Step 30e.
- If the system responds with any other state, stop here and call your system administrator or the next level of technical support.

33. Identify the potentially failed cable by entering:

RTRV-CABLE-T3::ALL::PAINTGRT;

The system responds with one the following messages:

— For *Message Set 1*:

```
  <TID #n YY-MM-DD HH:MM:SS>
M  RTRV CABLE T3::::PAINTGRT COMPLD
   /* DS3IN,CABLE,PIN #:DS3SW_IN,CABLE,PIN #:
         DS3SW_OUT,CABLE,PIN #:DS3OUT,CABLE,PIN #
*/
   " <DS3IN,CABLE,PIN #:DS3SW_IN,CABLE,PIN #:
         DS3SW_OUT,CABLE,PIN #:DS3OUT,CABLE,PIN
#> "
;
```

— For *Message Set 2*:

```
  <TID YY-MM-DD HH:MM:SS>
M  RTRV CABLE T3::::PAINTGRT COMPLD
   " <DS3IN,CABLE,PIN #:DS3SW_IN,CABLE,PIN #:
         DS3SW_OUT,CABLE,PIN #:DS3OUT,CABLE,PIN
#> "
;
```

Be certain to note the cable that is associated with the DS3SW circuit pack identified in Step 1. The numbers in the CABLE field, those starting with J, correlate to the numbers on the octopus cable connectors attached to the backplane. The suspected cable segment could be either the segment between the DS3 input interface (DS3IN INTFC) module and the DS3 switch (DS3SW) module, or the segment between the DS3 switch (DS3SW) module and the DS3 output interface (DS3OUT INTFC) module.

34. Make sure you have written down the cable's location for future use.

35. Wearing an ESD wrist strap, remove the backplane covers and visually examine, at both ends, the cables identified in Step 34.

36. Visually verify that the cable is correctly plugged in and that there are no offset, misaligned, or cocked connectors.

    - If you observe any of the above problems, continue this procedure at Step 37.
    - If you do *not* observe any problems with the cables, continue this procedure at Step 41.

37. Rectify the problem observed with the cable identified in Step 34.

38. At the craft interface terminal, check to see if the previous steps have cleared the problem by entering:

    TEST-PATH-T3::::PAINTGRT;

    The system responds with one of the following messages:

    — For *Message Set 1*:

```
  <TID #n YY-MM-DD HH:MM:SS>
M  TEST PATH T3:::PAINTGRT COMPLD
   /* DS3_IN,DS3_OUT:LOC,CHAN_OUT:LOC,CHAN_IN,
          CHAN_OUT:LOC,CHAN_IN:TAG:RESULT */
   " <DS3_IN,DS3_OUT:LOC,CHAN_OUT:LOC,CHAN_IN,
          CHAN_OUT:LOC,CHAN_IN:TAG:RESULT> "
;
```

    — For *Message Set 2*:

```
  <TID YY-MM-DD HH:MM:SS>
M  TEST PATH T3:::PAINTGRT COMPLD
   " <DS3_IN,DS3_OUT:LOC,CHAN_OUT:LOC,CHAN_IN,
          CHAN_OUT:LOC,CHAN_IN:TAG:RESULT> "
;
```

    where

    LOC = the DS3SW circuit pack location

    RESULT = the test results; NULL means that the test could not be run at the time it was requested, PASS means the specified path is fault-free, FAIL means the associated path is failed

Do one of the following:

- If the system responds with NULL, continue this procedure at Step 39.
- If the system responds with PASS, continue this procedure at Step 40.
- If the system responds with FAIL, continue this procedure at Step 41.

39. Having received a NULL response, check to see that *all* the statements that follow are true:

    a. The input and output unit controllers, associated with the DS3IN and DS3OUT circuit packs identified in Step 2, are in the in-service (IS) state.

    b. The protection switch circuit packs within the input unit, associated with the DS3IN circuit pack identified in Step 2, are in the in-service (IS) state.

    c. The DS3IN and DS3OUT circuit packs identified in Step 2 are present and provisioned and have no active failure conditions other than the PAINTGRT condition.

    d. The input port, associated with the DS3OUT circuit pack identified in Step 2, has a valid incoming DS3 signal present.

    Do one of the following:

    - If this is the first time you received the NULL response and all of the previous statements are *true*, you have a problem that needs to be reported to your system administrator or next level of technical support.
    - If this is the first time you received the NULL response and any or all of the previous statements are *false*, correct the situation(s) and repeat Step 38 from the beginning.
    - If this is the second time you have executed Step 38 and received the NULL response, stop here and call your system administrator or the next level of technical support.

40. Having received the PASS response, perform the following steps:

    a. Check the craft interface terminal for one of the following autonomous messages:

    — For *Message Set 1*:

```
  <TID #n YY-MM-DD HH:MM:SS>
A <ASEQ> REPT SW EQPT
   /* WORKING ENTITY,SWITCH DIRECTION */
   " <WORKING ENTITY>,WKG "
;
```

— For *Message Set 2*:

```
  <TID YY-MM-DD HH:MM:SS>
A <ASEQ> REPT SW EQPT
   " <WORKING ENTITY>,WKG "
;
```

where

`WORKING ENTITY` = the DS3SW circuit pack identified in Step 1

b. Verify that the DS3SW circuit pack identified in Step 1 no longer generates an alarm, by entering the two commands that follow:

`RTRV-ALM-EQPT::ALL::,PAINTGRT;`

and

`RTRV-PATH-T3::ALL::PAINTGRT;`

In both system responses, the DS3SW circuit pack identified in Step 1 should *not* appear in the message and the red LED should no longer be lighted.

c. Since the original DS3SW, DS3IN, and DS3OUT circuit packs are not at fault, they can be put in the spares storage cabinet for future use.

d. Wearing an ESD wrist strap, reattach the backplane covers.

e. You have successfully corrected the problem. If more alarms exist on the frame, return to Procedure 9-1, "How to Clear Alarms," to determine the next corrective action to take.

41. Having arrived at this step because you did *not* observe cable problems in Step 36 or because you received the `FAIL` response in Step 38, call your system administrator or the next level of technical support to fix the cable. Note the number of this procedure and the number of the next step so that you can return to the correct location once the failed cable is repaired.

42. After the failed cable has been repaired by your system administrator or the next level of technical support, continue this procedure at Step 43.

43. At the craft interface terminal, verify that the problem has been corrected by entering:

`TEST-PATH-T3::::PAINTGRT;`

The system responds with one of the following messages:

— For *Message Set 1*:

```
  <TID #n YY-MM-DD HH:MM:SS>
MTEST PATH T3::::PAINTGRT COMPLD
/* DS3_IN,DS3_OUT:LOC,CHAN_OUT:LOC,CHAN_IN,
       CHAN_OUT:LOC,CHAN_IN:TAG:RESULT */
" <DS3_IN,DS3_OUT:LOC,CHAN_OUT:LOC,CHAN_IN,
       CHAN_OUT:LOC,CHAN_IN:TAG:>PASS "
;
```

— For *Message Set 2*:

```
  <TID YY-MM-DD HH:MM:SS>
M  TEST PATH T3::::PAINTGRT COMPLD
   " <DS3_IN,DS3_OUT:LOC,CHAN_OUT:LOC,CHAN_IN,
        CHAN_OUT:LOC,CHAN_IN:TAG:>PASS "
;
```

44. Having received the PASS response, perform the following steps:

a. Check the craft interface terminal for one of the following autonomous messages:

— For *Message Set 1*:

```
  <TID #n YY-MM-DD HH:MM:SS>
A <ASEQ> REPT SW EQPT
   /* WORKING ENTITY,SWITCH DIRECTION */
   " <WORKING ENTITY>,WKG "
;
```

— For *Message Set 2*:

```
  <TID YY-MM-DD HH:MM:SS>
A <ASEQ> REPT SW EQPT
   " <WORKING ENTITY>,WKG "
;
```

where

WORKING ENTITY = the DS3SW circuit pack identified in Step 1

b. Verify that the DS3SW circuit pack identified in Step 1 no longer generates an alarm, by entering the two commands that follow:

RTRV-ALM-EQPT::ALL::,PAINTGRT;

and

RTRV-PATH-T3::ALL::PAINTGRT;

In both system responses, the DS3SW circuit pack identified in Step 1 should *not* appear in the message and the red LED should no longer be lighted.

c. Since the original DS3SW, DS3IN, and DS3OUT circuit packs are not at fault, they can be put in the spares storage cabinet for future use.

d. Wearing an ESD wrist strap, reattach the backplane covers.

e. You have successfully corrected the problem. If more alarms exist on the frame, return to Procedure 9-1, "How to Clear Alarms," to determine the next corrective action to take.

Troubleclearing—STS-1 Fault Isolation

12

Contents

PAINTGRT Condition Type for STS-1 Circuit Packs 12-1

Procedure 12-1.
Clearing PAINTGRT Condition Type on STS1IN, STS1OUT, and DS3SW Circuit Packs 12-2

Procedure 12-2.
STS1IN:MN,PAINTGRT and STS1OUT:MN, PAINTGRT Alarms with No Other Circuit Packs Showing PAINTGRT 12-5

Procedure 12-3.
STS1OUT:MN,PAINTGRT Alarm with No Other Circuit Packs Showing PAINTGRT 12-22

Procedure 12-4.
STS1IN:MN, PAINTGRT and DS3SW:MN, PAINTGRT, and STS1OUT:MN,PAINTGRT Alarms with No Other Circuit Packs Showing PAINTGRT 12-38

Procedure 12-5.
STS1IN:MN,PAINTGRT and DS3SW:MN, PAINTGRT Alarms with No Other Circuit Packs Showing PAINTGRT 12-55

Procedure 12-6.
STS1OUT:MN,PAINTGRT and DS3SW:MN, PAINTGRT Alarms with No Other Circuit Packs Showing PAINTGRT 12-76

Procedure 12-7.
STS1IN:MN,PAINTGRT Alarm with No Other Circuit Packs Showing PAINTGRT 12-97

Troubleclearing—STS-1 Fault Isolation

12

PAINTGRT Condition Type for STS-1 Circuit Packs

CAUTION:
Improper troubleclearing.
Use of the procedures in Chapter 12 before executing Procedure 9-1 will result in improper troubleclearing. Execute Procedure 9-1 and come to this chapter ***only*** *if instructed to do so.*

The condition type PAINTGRT occurs as a result of the DACS III-2000 system's detection of the loss of a valid signal internal to the frame. This loss includes any failure from an output channel of the STS1IN interface circuit pack, through the DS3SW CTR circuit pack, and into the STS1OUT interface circuit pack.

Depending on the type and location of the actual failure, a single failure can point to, and cause the autonomous switching of, either one, two, or three circuit packs. Additionally, the alarm levels of the PAINTGRT conditions may vary, depending upon other conditions that may be present in the frame at the same time.

Because DACS III-2000 treats mated circuit packs as a single protectable entity, there is a small class of failures that cannot be isolated to a single pack of the pair. In very rare cases Fault Isolation may alarm the mate of a faulty circuit pack but not the faulty circuit pack itself. In these cases, the procedures tell you to stop and call your system administrator or next level of technical support. Do not try to replace either circuit pack yourself because, if protection is not available, replacing the wrong one will cause a loss of service.

CAUTION:
Inappropriate troubleclearing.
Use of individual PAINTGRT procedures without first executing Procedure 12-1 will result in inappropriate troubleclearing activities. Procedure 12-1 should be considered the "umbrella" procedure that is **always** *executed first before moving to one of the subordinate procedures, which are numbered 12-2 through 12-10.*

Procedure 12-1. Clearing PAINTGRT Condition Type on STS1IN, STS1OUT, and DS3SW Circuit Packs

CAUTION:
Electrostatic discharge (ESD) damage.
ESD can cause damage to the components of a DACS III-2000 system. Wear an ESD wrist strap when working around the frame.

1. Begin to determine the conditions that are currently affecting the frame by entering:

   RTRV-ALM-EQPT::ALL;

   The system responds with one of the following messages which identifies the circuit pack(s) associated with the PAINTGRT condition type:

   — For *Message Set 1*:

   ```
     <TID #n YY-MM-DD HH:MM:SS>
   M  RTRV ALM EQPT::ALL COMPLD
      /* LOC:NTFCNCDE,CONDTYPE,SRVEFF */
      "<LOC:NTFCNCDE,CONDTYPE,SRVEFF>"
   ;
   ```

   — For *Message Set 2*:

   ```
     <TID YY-MM-DD HH:MM:SS>
   M  RTRV ALM EQPT::ALL COMPLD
      "<LOC:NTFCNCDE,CONDTYPE,SRVEFF>"
   ;
   ```

   where

LOC	=	the equipment location(s)
NTFCNCDE	=	the notification code; MJ is a major alarm, MN is a minor alarm
CONDTYPE	=	the condition type
SRVEFF	=	the effect on the system's service; SA is service-affecting, NSA is not service-affecting

A failed circuit pack will also have a lighted red LED. (If a circuit pack has the PAINTGRT condition active but no red LED is lighted on the pack, it is likely that the LED is not functional for that pack. This can be verified by pressing the LAMP TEST push-button, and verifying that the LED for that pack remains out when the rest of the LEDs for that shelf are lighted.)

2. Write down the system response.
3. Select from Table 12-1 the scenario that matches your system response.
4. Correct the PAINTGRT condition type using the procedure listed next to the scenario that you identified in Step 3.

Table 12-1. PAINTGRT Decision Tree

If the system response from RTRV-ALM-EQPT is...	THEN use...
STS1IN:MN,PAINTGRT STS1OUT:MN,PAINTGRT	Procedure 12-2
STS1OUT:MN,PAINTGRT	Procedure 12-3
STS1IN:MN,PAINTGRT DS3SW:MN,PAINTGRT STS1OUT:MN,PAINTGRT	Procedure 12-4
STS1IN:MN,PAINTGRT DS3SW:MN,PAINTGRT	Procedure 12-5
STS1OUT:MN,PAINTGRT DS3SW:MN,PAINTGRT	Procedure 12-6
STS1IN:MN,PAINTGRT	Procedure 12-7

Procedure 12-2. STS1IN:MN,PAINTGRT and STS1OUT:MN,PAINTGRT Alarms with No Other Circuit Packs Showing PAINTGRT

Please note that there are three sections within Procedure 12-2; each section represents one possible source of the PAINTGRT condition:

- Checking the STS1IN Circuit Pack
- Checking the DS3SW Circuit Pack
- Checking the Cables

Sometimes you will use the steps in all three sections to clear the PAINTGRT condition; other times only the first, or first and second, sections will be needed. *However, regardless of the number of sections you use, the steps must be executed in the order presented.*

CAUTION:
Electrostatic discharge (ESD) damage.
ESD can cause damage to the components of a DACS III-2000 system. Wear an ESD wrist strap when working around the frame.

Checking the STS1IN Circuit Pack

1. Have the system output from Procedure 12-1, in which you identified the affected STS1IN and STS1OUT circuit packs, available for referencing.
2. Obtain a spare STS1IN (ARW11) circuit pack.
   - If a spare circuit pack is not available, stop here and call your system administrator or the next level of technical support.
   - If a spare circuit pack is available, continue this procedure at Step 3.
3. At the craft interface terminal, verify that the STS1IN circuit pack is in the out-of-service fault (OOS-FLT) state by entering:

   RTRV-STATE-EQPT::ELOC::ALL;

   where

   ELOC = the STS1IN circuit pack identified in Step 1, specified as STS1IN-{1 through 8}-{1 through 30}

   The system should respond with one of the following messages:

— For *Message Set 1*:

```
  <TID #n YY-MM-DD HH:MM:SS>
M  RTRV STATE EQPT::<ELOC>::ALL COMPLD
   /* LOC:STATE */
   " STS1IN-<unit-slot>:OOS-FLT "
;
```

— For *Message Set 2*:

```
  <TID YY-MM-DD HH:MM:SS>
M  RTRV STATE EQPT::<ELOC>::ALL COMPLD
   " STS1IN-<unit-slot>:OOS-FLT "
;
```

- If the system shows the STS1IN circuit pack is out-of-service fault (OOS-FLT), continue this procedure at Step 4.
- If the system responds with any other state, stop here and call your system administrator or the next level of technical support.

4. At the craft interface terminal, verify that the related protection circuit packs are in the active (ACT) state by entering:

RTRV-STATE-EQPT::ELOC::ALL;

where

ELOC = the protection packs; identified as STS1IN-{1 through 8}-P1&-P2

The system should respond with one of the following messages:

— For *Message Set 1*:

```
  <TID #n YY-MM-DD HH:MM:SS>
M  RTRV STATE EQPT::<ELOC>::ALL COMPLD
   /* LOC:STATE */
   " STS1IN-<unit>-P1:ACT "
   " STS1IN-<unit>-P2:ACT "
;
```

— For *Message Set 2*:

```
  <TID YY-MM-DD HH:MM:SS>
M  RTRV STATE EQPT::<ELOC>::ALL COMPLD
   " STS1IN-<unit>-P1:ACT "
   " STS1IN-<unit>-P2:ACT "
;
```

- If the system shows the protection circuit packs are active (ACT), continue this procedure at Step 5.
- If the system responds with any other state, stop here and call your system administrator or the next level of technical support.

5. Go to the DACS III-2000 frame and remove the protected STS1IN circuit pack that was identified in Step 1. If you need detailed instructions, see Procedure 3-2, "Removing Circuit Packs."

6. Using standard office procedures, write down the
   - — serial number of the removed STS1IN circuit pack
   - — unit and slot from which it was removed.

   Set aside the removed STS1IN circuit pack until the procedure instructs you to do something with it.

7. Insert the spare STS1IN circuit pack into the empty slot. If you need detailed instructions, see Procedure 3-1, "Installing Circuit Packs."

8. At the craft interface terminal, check to see if the previous steps have cleared the problem by entering:

   TEST-PATH-STS1::::PAINTGRT;

   The system responds with one of the following messages:

   — For *Message Set 1*:

```
  <TID #n YY-MM-DD HH:MM:SS>
M  TEST PATH STS1::::PAINTGRT COMPLD
   /* STS1_IN,STS1_OUT:LOC,CHAN_OUT:LOC,CHAN_IN,
         CHAN_OUT:LOC,CHAN_IN:TAG:RESULT */
   " <STS1_IN,STS1_OUT:LOC,CHAN_OUT:LOC,CHAN_IN,
         CHAN_OUT:LOC,CHAN_IN:TAG:RESULT> "
;
```

   — For *Message Set 2*:

```
  <TID YY-MM-DD HH:MM:SS>
M  TEST PATH STS1::::PAINTGRT COMPLD
   " STS1_IN,STS1_OUT:LOC,CHAN_OUT:LOC,CHAN_IN,
         CHAN_OUT:LOC,CHAN_IN:TAG:RESULT> "
;
```

   where

   LOC = the STS1IN circuit pack location

   RESULT = the test results; NULL means that the test could not be run at the time it was requested, PASS means the specified path is fault-free, FAIL means the associated path is failed

   Do one of the following:

   - If the system responds with NULL, continue this procedure at Step 9.
   - If the system responds with PASS, continue this procedure at Step 10.
   - If the system responds with FAIL, continue this procedure at Step 11, "Checking the DS3SW Circuit Pack."

9. Having received a NULL response, check to see that *all* the following statements are true:

   a. The input and output unit controllers, associated with the STS1IN circuit pack identified in Step 1, are in the in-service (IS) state.

   b. The protection switch circuit packs within the input unit, associated with the STS1IN circuit pack identified in Step 1, are in the in-service (IS) state.

   c. The circuit packs along the failed path, associated with the STS1IN circuit pack identified in Step 1, are present and provisioned and have no active failure conditions other than the PAINTGRT condition.

   d. The input port, associated with the STS1IN circuit pack identified in Step 1, has a valid incoming STS-1 signal present.

   Do one of the following:

   - If this is the first time you received the NULL response and all of the previous statements are *true*, you have a problem that needs to be reported to your system administrator or next level of technical support.
   - If this is the first time you received the NULL response and any or all of the previous statements are *false*, correct the situation(s) and repeat Step 8 from the beginning.
   - If this is the second time you have executed Step 8 and received the NULL response, stop here and call your system administrator or the next level of technical support.

10. Having received the PASS response, perform the following steps:

    a. Check the craft interface terminal for the two autonomous messages that follow:

       — First message for *Message Set 1*:

```
  <TID #n YY-MM-DD HH:MM:SS>
A <ASEQ> REPT SW EQPT
    /* WORKING ENTITY,SWITCH DIRECTION */
    " <WORKING ENTITY>,WKG "
;
```

       — First message for *Message Set 2*:

```
  <TID YY-MM-DD HH:MM:SS>
A <ASEQ> REPT SW EQPT
    " <WORKING ENTITY>,WKG "
;
```

where

`WORKING ENTITY` = the STS1IN circuit pack identified in Step 1

— Second message for *Message Set 1*:

```
  <TID #n YY-MM-DD HH:MM:SS>
A <ASEQ> REPT SW EQPT
    /* WORKING ENTITY,SWITCH DIRECTION */
    " <WORKING ENTITY>,WKG "
;
```

— Second message for *Message Set 2*:

```
  <TID YY-MM-DD HH:MM:SS>
A <ASEQ> REPT SW EQPT
    " <WORKING ENTITY>,WKG "
;
```

where

`WORKING ENTITY` = the STS1OUT circuit pack identified in Step 1

b. Verify that the STS1IN and STS1OUT circuit packs identified in Step 1 no longer generate alarms by entering the two commands that follow:

`RTRV-ALM-EQPT::ALL::,PAINTGRT;`

and

`RTRV-PATH-STS1::ALL::PAINTGRT;`

In both system responses, the STS1IN and STS1OUT circuit packs identified in Step 1 should *not* appear in the message and the red LEDs should no longer be lighted.

c. Using standard office procedures, label and record the STS1IN circuit pack, set aside in Step 6, as failed and in need of repair. If you need instructions for returning a failed circuit pack, see Procedure 3-11, "Returning Circuit Packs for Repair."

d. You have successfully corrected the problem. If more alarms exist on the frame, return to Procedure 9-1, "How to Clear Alarms," to determine the next corrective action to take.

Checking the DS3SW Circuit Pack

11. Having received the FAIL response, check for the DS3SW circuit pack that is associated with the failed path by entering:

    RTRV-PATH-STS1::ALL::PAINTGRT;

    The system should respond with one of the following messages:

    — For *Message Set 1*:

    ```
      <TID #n YY-MM-DD HH:MM:SS>
    M  RTRV PATH STS1::: COMPLD
       /* STS1_IN,STS1_OUT:LOC,CHAN_OUT:LOC,CHAN_IN,
             CHAN_OUT:LOC,CHAN_IN */
       " <STS1_IN,STS1_OUT:LOC,CHAN_OUT:LOC,CHAN_IN,
             CHAN_OUT:LOC,CHAN_IN> "
    ;
    ```

    — For *Message Set 2*:

    ```
      <TID YY-MM-DD HH:MM:SS>
    M  RTRV PATH STS1::: COMPLD
       " <STS1_IN,STS1_OUT:LOC,CHAN_OUT:LOC,CHAN_IN,
             CHAN_OUT:LOC,CHAN_IN> "
    ;
    ```

    - If the system responds with COMPLD, perform the following steps:

      a. Write down the location of the DS3SW circuit pack identified in the message. The second LOC parameter shows the DS3SW location, specified as DS3SW-{1 through 4}-{1 through 16}. (There will be two failed paths identified in the message. This is fine; the DS3SW pack will be the same in each path.) Remember, when you look at the frame this DS3SW circuit pack will *not* have a lighted red LED.

      b. Continue this procedure at Step 12.

    - If the system responds with DENY, stop here and call your system administrator or the next level of technical support.

12. Obtain a spare DS3SW (AWL1 or AYJ1) circuit pack.

    - If a spare circuit pack is not available, stop here and call your system administrator or the next level of technical support.
    - If a spare circuit pack is available, continue this procedure at Step 13.

13. Switch the DS3SW circuit pack to protection by entering:

    SW-TOPROTN-EQPT::ELOC;

    where

ELOC = the DS3SW circuit pack identified in Step 11, specified as DS3SW-{1 through 4}-{1 through 16}

14. Go to the DACS III-2000 frame and remove the DS3SW circuit pack that was identified in Step 11.
    - If you are working on a 1024-size frame and need detailed instructions, see Procedure 3-2, "Removing Circuit Packs."
    - If you are working on a 2048-size frame and need detailed instructions, see Procedure 3-4, "Removing DS3SWL CTR Circuit Packs."
15. Using standard office procedures, write down the
    - serial number of the removed DS3SW circuit pack
    - slot from which it was removed

    Set aside the removed DS3SW circuit pack until the procedure instructs you to do something with it.
16. Insert the spare DS3SW circuit pack into the empty slot.
    - If you are working on a 1024-size frame and need detailed instructions, see Procedure 3-1, "Installing Circuit Packs."
    - If you are working on a 2048-size frame and need detailed instructions, see Procedure 3-3, "Installing DS3SWL CTR Circuit Packs."
17. At the craft interface terminal, check to see if the previous steps have cleared the problem by entering:

    TEST-PATH-STS1::::PAINTGRT;

    The system responds with one of the following messages:

    — For *Message Set 1*:

```
  <TID #n YY-MM-DD HH:MM:SS>
M  TEST PATH STS1::::PAINTGRT COMPLD
   /* EC1_IN,EC1_OUT:LOC,CHAN_OUT:LOC,CHAN_IN,
         CHAN_OUT:LOC,CHAN_IN:TAG:RESULT */
   " <EC1_IN,EC1_OUT:LOC,CHAN_OUT:LOC,CHAN_IN,
         CHAN_OUT:LOC,CHAN_IN:TAG:RESULT> "
;
```

    — For *Message Set 2*:

```
  <TID YY-MM-DD HH:MM:SS>
M  TEST PATH STS1::::PAINTGRT COMPLD
   " <EC1_IN,EC1_OUT:LOC,CHAN_OUT:LOC,CHAN_IN,
         CHAN_OUT:LOC,CHAN_IN:TAG:RESULT> "
;
```

where

LOC = the DS3SW circuit pack location identified in Step 11, specified as DS3SW-{1 through 4}-{1 through 16}

RESULT = the test results; NULL means that the test could not be run at the time it was requested, PASS means the specified path is fault-free, FAIL means the associated path is failed

- If the system responds with NULL, continue this procedure at Step 18.
- If the system responds with PASS, continue this procedure at Step 19.
- If the system responds with FAIL, continue this procedure at Step 20, "Checking the Cables."

18. Having received a NULL response, check to see that *all* the statements that follow are true:

    a. The input and output unit controllers, associated with the STS1IN circuit pack identified in Step 1, are in the in-service (IS) state.

    b. The protection switch circuit packs within the input unit, associated with the STS1IN circuit pack identified in Step 1, are in the in-service (IS) state.

    c. The circuit packs along the failed path, associated with the STS1IN circuit pack identified in Step 1, are present and provisioned and have no active failure conditions other than the PAINTGRT condition.

    d. The input port, associated with the STS1IN circuit pack identified in Step 1, has a valid incoming STS1IN signal present.

    Do one of the following:

    - If this is the first time you received the NULL response and all of the previous statements are *true*, you have a problem that needs to be reported to your system administrator or next level of technical support.
    - If this is the first time you received the NULL response and any or all of the previous statements are *false*, correct the situation(s) and repeat Step 17 from the beginning.
    - If this is the second time you have executed Step 17 and received the NULL response, stop here and call your system administrator or the next level of technical support.

19. Having received the PASS response, perform the following steps:

    a. Check the craft interface terminal for the two autonomous messages that follow:

— First message for *Message Set 1*:

```
  <TID #n YY-MM-DD HH:MM:SS>
A <ASEQ> REPT SW EQPT
   /* WORKING ENTITY,SWITCH DIRECTION */
   " <WORKING ENTITY>,WKG "
;
```

— First message for *Message Set 2*:

```
  <TID YY-MM-DD HH:MM:SS>
A <ASEQ> REPT SW EQPT
   " <WORKING ENTITY>,WKG "
;
```

where

`WORKING ENTITY` = the STS1IN circuit pack identified in Step 1

— Second message for *Message Set 1*:

```
  <TID #n YY-MM-DD HH:MM:SS>
A <ASEQ> REPT SW EQPT
   /* WORKING ENTITY,SWITCH DIRECTION */
   " <WORKING ENTITY>,WKG "
;
```

— Second message for *Message Set 2*:

```
  <TID YY-MM-DD HH:MM:SS>
A <ASEQ> REPT SW EQPT
   " <WORKING ENTITY>,WKG "
;
```

where

`WORKING ENTITY` = the STS1OUT circuit pack identified in Step 1

b. Verify that the STS1IN and STS1OUT circuit packs identified in Step 1 no longer generate alarms by entering the two commands that follow:

`RTRV-ALM-EQPT::ALL::,PAINTGRT;`

and

`RTRV-PATH-STS1::ALL::PAINTGRT;`

In both system responses, the STS1IN and STS1OUT circuit packs identified in Step 1 should *not* appear in the message and the red LEDs should no longer be lighted.

c. At the craft interface terminal, switch the DS3SW to a working state by entering:

```
ALW-SW-EQPT::ELOC::WKG;
```

where

ELOC = the DS3SW circuit pack location identified in Step 11; specified by DS3SW-{1 through 4}-{1 through 16}

d. Verify a successful switch to working of the DS3SW circuit pack identified in Step 11 by entering:

```
RTRV-STATE-EQPT::ELOC;
```

where

ELOC = the DS3SW circuit pack

The system output should be one of the following messages:

— For *Message Set 1*:

```
  <TID #n YY-MM-DD HH:MM:SS>
M  RTRV STATE EQPT::<ELOC>::ALL COMPLD
   /* LOC:STATE */
   " <LOC>:ACT "
;
```

— For *Message Set 2*:

```
  <TID YY-MM-DD HH:MM:SS>
M  RTRV STATE EQPT::<ELOC>::ALL COMPLD
   " <LOC>:ACT "
;
```

where

LOC = the DS3SW circuit pack identified in Step 11

- If the system shows the DS3SW circuit pack identified in Step 11 is ACT, continue this procedure at Step 19e.
- If the system responds with any other state stop here and call your system administrator or the next level of technical support.

e. Using standard office procedures, label and record the DS3SW circuit pack, set aside in Step 15, as failed and in need of repair. If you need instructions for returning a failed circuit pack, see Procedure 3-11, "Returning Circuit Packs for Repair."

f. Since the original STS1IN circuit pack is not at fault, it can be put in the spares storage cabinet for future use.

g. You have successfully corrected the problem. If more alarms exist on the frame, return to Procedure 9-1, "How to Clear Alarms," to determine the next corrective action to take.

Checking the Cables

20. Having received the FAIL response, identify the failed cable by entering:

```
RTRV-CABLE-STS1::ALL::PAINTGRT;
```

The system responds with one of the following messages:

— For *Message Set 1*:

```
  <TID #n YY-MM-DD HH:MM:SS>
M  RTRV CABLE STS1::::PAINTGRT COMPLD
   /* STS1IN,CABLE,PIN #:DS3SW_IN,CABLE,PIN #:
      DS3SW_OUT,CABLE,PIN #:STS1OUT,CABLE,PIN # */
   " <STS1IN,CABLE,PIN #:DS3SW_IN,CABLE,PIN #:
      DS3SW_OUT,CABLE,PIN #:STS1OUT,CABLE,PIN #> "
;
```

— For *Message Set 2*:

```
   <TID YY-MM-DD HH:MM:SS>
M   RTRV CABLE STS1::::PAINTGRT COMPLD
    " <STS1IN,CABLE,PIN #:DS3SW_IN,CABLE,PIN #:
       DS3SW_OUT,CABLE,PIN #:STS1OUT,CABLE,PIN #> "
;
```

Find the output line that identifies the STS1IN circuit pack that you noted in Step 1. The numbers in the CABLE field, those starting with J, correlate to the numbers on the octopus cable connectors attached to the backplane. The suspected cable segment will be that segment between the STS1 input interface (STS1IN INTFC) module and the DS3 switch (DS3SW) module. (There will be two failed cables identified in the message. This is fine; the failed segment will be the same in each cable.)

21. Make sure you have written down the failed cable's location for future use.

22. Wearing an ESD wrist strap, remove the backplane covers. Using the cable identification from Step 21, visually examine, at both ends, the cable that runs between the STS1IN module and the DS3SW module.

23. Visually verify that the cable is correctly plugged in and that there are no offset, misaligned, or cocked connectors.

    - If you observe any of the above problems, continue this procedure at Step 24.
    - If you do *not* observe any problems with the cable, continue this procedure at Step 28.

24. Rectify the problem observed with the cable identified in Step 21.

25. At the craft interface terminal, check to see if the previous steps have cleared the problem by entering:

TEST-PATH-STS1::::PAINTGRT;

The system responds with one of the following messages:

— For *Message Set 1*:

```
  <TID #n YY-MM-DD HH:MM:SS>
M  TEST PATH STS1:::PAINTGRT COMPLD
   /* EC1_IN,EC1_OUT:LOC,CHAN_OUT:LOC,CHAN_IN,
         CHAN_OUT:LOC,CHAN_IN:TAG:RESULT */
   " <EC1_IN,EC1_OUT:LOC,CHAN_OUT:LOC,CHAN_IN,
         CHAN_OUT:LOC,CHAN_IN:TAG:RESULT> "
;
```

— For *Message Set 2*:

```
  <TID YY-MM-DD HH:MM:SS>
M  TEST PATH STS1:::PAINTGRT COMPLD
   " <EC1_IN,EC1_OUT:LOC,CHAN_OUT:LOC,CHAN_IN,
         CHAN_OUT:LOC,CHAN_IN:TAG:RESULT> "
;
```

where

`LOC` = the STS1IN circuit pack location

`RESULT` = the test results; `NULL` means that the test could not be run at the time it was requested, `PASS` means the specified path is fault-free, `FAIL` means the associated path is failed

Do one of the following:

- If the system responds with `NULL`, continue this procedure at Step 26.
- If the system responds with `PASS`, continue this procedure at Step 27.
- If the system responds with `FAIL`, continue this procedure at Step 28.

26. Having received a `NULL` response, check to see that *all* the statements that follow are true:

    a. The input and output unit controllers, associated with the STS1IN circuit pack identified in Step 1, are in the in-service (`IS`) state.

    b. The protection switch circuit packs within the input unit, associated with the STS1IN circuit pack identified in Step 1, are in the in-service (`IS`) state.

    c. The circuit packs along the failed path, associated with the STS1IN circuit pack identified in Step 1, are present and provisioned and have no active failure conditions other than the PAINTGRT condition.

d. The input port, associated with the STS1IN circuit pack identified in Step 1, has a valid incoming STS-1 signal present.

Do one of the following:

- If this is the first time you received the NULL response and all of the previous statements are *true*, you have a problem that needs to be reported to your system administrator or next level of technical support.
- If this is the first time you received the NULL response and any or all of the previous statements are *false*, correct the situation(s) and repeat Step 25 from the beginning.
- If this is the second time you have executed Step 25 and received the NULL response, stop here and call your system administrator or the next level of technical support.

27. Having received the PASS response, perform the following steps:

a. Check for the two autonomous messages that follow from the list of messages that appears:

— First message for *Message Set 1*:

```
  <TID #n YY-MM-DD HH:MM:SS>
A <ASEQ> REPT SW EQPT
    /* WORKING ENTITY,SWITCH DIRECTION */
    " <WORKING ENTITY>,WKG "
;
```

— First message for *Message Set 2*:

```
  <TID YY-MM-DD HH:MM:SS>
A <ASEQ> REPT SW EQPT
    " <WORKING ENTITY>,WKG "
;
```

where

WORKING ENTITY = the STS1IN circuit pack identified in Step 1

— Second message for *Message Set 1*:

```
  <TID #n YY-MM-DD HH:MM:SS>
A <ASEQ> REPT SW EQPT
    /* WORKING ENTITY,SWITCH DIRECTION */
    " <WORKING ENTITY>,WKG "
;
```

— Second message for *Message Set 2*:

```
  <TID YY-MM-DD HH:MM:SS>
A <ASEQ> REPT SW EQPT
    " <WORKING ENTITY>,WKG "
;
```

where

WORKING ENTITY = the STS1OUT circuit pack identified in Step 1

b. Verify that the STS1IN and STS1OUT circuit packs identified in Step 1 no longer generate alarms by entering the two commands that follow:

RTRV-ALM-EQPT::ALL::PAINTGRT;

and

RTRV-PATH-STS1::ALL::PAINTGRT;

In both system responses, the STS1IN and STS1OUT circuit packs identified in Step 1 should *not* appear in the message and each red LED should no longer be lighted.

c. At the craft interface terminal, switch the DS3SW to a working state by entering:

ALW-SW-EQPT::ELOC::WKG;

where

ELOC = the DS3SW circuit pack identified in Step 11, specified as DS3SW-{1 through 4}-{1 through 16}

d. Verify a successful switch to working of the DS3SW circuit pack by entering:

RTRV-STATE-EQPT::ELOC;

where

ELOC = the DS3SW circuit pack identified in Step 11

The system response should be one of the following messages:

— For *Message Set 1*:

```
  <TID #n YY-MM-DD HH:MM:SS>
M  RTRV STATE EQPT::<ELOC>::ALL COMPLD
   /* LOC:STATE */
   " <LOC>:ACT "
;
```

— For *Message Set 2*:

```
  <TID YY-MM-DD HH:MM:SS>
M  RTRV STATE EQPT::<ELOC>::ALL COMPLD
   " <LOC>:ACT "
;
```

where

LOC = the DS3SW circuit pack identified in Step 11

e. Since the original STS1IN and DS3SW circuit packs are not at fault, they can be put in the spares storage cabinet for future use.

f. Wearing an ESD wrist strap, reattach the backplane covers.

g. You have successfully corrected the problem. If more alarms exist on the frame, return to Procedure 9-1, "How to Clear Alarms," to determine the next corrective action to take.

28. Having arrived at this step because you did *not* observe cable problems in Step 23 or because you received the FAIL response in Step 25, call your system administrator or the next level of technical support to fix the cable. Note the number of this procedure and the number of the next step so that you can return to the correct location once the failed cable is repaired.

29. After the failed cable has been repaired by your system administrator or the next level of technical support, continue this procedure at Step 30.

30. At the craft interface terminal, verify that the problem has been corrected by entering:

    TEST-PATH-STS1::::PAINTGRT;

    The system responds with one of the following messages:

    — For *Message Set 1*:

```
  <TID #n YY-MM-DD HH:MM:SS>
M TEST PATH STS1::::PAINTGRT COMPLD
  /* EC1_IN,EC1_OUT:LOC,CHAN_OUT:LOC,CHAN_IN,
        CHAN_OUT:LOC,CHAN_IN:TAG:RESULT */
  " <EC1_IN,EC1_OUT:LOC,CHAN_OUT:LOC,CHAN_IN,
        CHAN_OUT:LOC,CHAN_IN:TAG:>PASS "
;
```

    — For *Message Set 2*:

```
  <TID YY-MM-DD HH:MM:SS>
M TEST PATH STS1::::PAINTGRT COMPLD
  " <EC1_IN,EC1_OUT:LOC,CHAN_OUT:LOC,CHAN_IN,
        CHAN_OUT:LOC,CHAN_IN:TAG:>PASS "
;
```

31. Verify that the system output is PASS. Having received the PASS response, perform the following steps:

    a. Check the craft interface terminal for the two autonomous messages that follow:

    — First message for *Message Set 1*:

```
  <TID #n YY-MM-DD HH:MM:SS>
A <ASEQ> REPT SW EQPT
   /* WORKING ENTITY,SWITCH DIRECTION */
   " <WORKING ENTITY>,WKG "
;
```

— First message for *Message Set 2*:

```
  <TID YY-MM-DD HH:MM:SS>
A <ASEQ> REPT SW EQPT
   " <WORKING ENTITY>,WKG "
;
```

where

`WORKING ENTITY` = the STS1IN circuit pack identified in Step 1

— Second message for *Message Set 1*:

```
  <TID #n YY-MM-DD HH:MM:SS>
A <ASEQ> REPT SW EQPT
   /* WORKING ENTITY,SWITCH DIRECTION */
   " <WORKING ENTITY>,WKG "
;
```

— Second message for *Message Set 2*:

```
  <TID YY-MM-DD HH:MM:SS>
A <ASEQ> REPT SW EQPT
   " <WORKING ENTITY>,WKG "
;
```

where

`WORKING ENTITY` = the STS1OUT circuit pack identified in Step 1

b. Verify that the STS1IN and STS1OUT circuit packs identified in Step 1 no longer generate alarms by entering the two commands that follow:

`RTRV-ALM-EQPT::ALL::,PAINTGRT;`

and

`RTRV-PATH-STS1::ALL::PAINTGRT;`

In both system responses, the STS1IN and STS1OUT circuit packs identified in Step 1 should *not* appear in the message and the red LEDs should no longer be lighted.

c. At the craft interface terminal, switch the DS3SW to a working state by entering:

`ALW-SW-EQPT::ELOC::WKG;`

where

ELOC = the DS3SW circuit pack identified in Step 11, specified as DS3SW-{1 through 4}-{1 through 16}

d. Verify a successful switch to working of the DS3SW circuit pack by entering:

`RTRV-STATE-EQPT::ELOC;`

where

ELOC = the DS3SW circuit pack identified in Step 11

The system response should be one of the following messages:

— For *Message Set 1*:

```
  <TID #n YY-MM-DD HH:MM:SS>
M  RTRV STATE EQPT::<ELOC>::ALL COMPLD
   /* LOC:STATE */
   " <LOC>:ACT "
;
```

— For *Message Set 2*:

```
  <TID YY-MM-DD HH:MM:SS>
M  RTRV STATE EQPT::<ELOC>::ALL COMPLD
   " <LOC>:ACT "
;
```

where

LOC = the DS3SW circuit pack identified in Step 11

e. Since the original STS1IN and DS3SW circuit packs are not at fault, they can be put in the spares storage cabinet for future use.

f. Wearing an ESD wrist strap, reattach the backplane covers.

g. You have successfully corrected the problem. If more alarms exist on the frame, return to Procedure 9-1, "How to Clear Alarms," to determine the next corrective action to take.

Procedure 12-3. STS1OUT:MN,PAINTGRT Alarm with No Other Circuit Packs Showing PAINTGRT

Please note that there are three sections within Procedure 12-3; each section represents one possible source of the PAINTGRT condition:

- Checking the STS1OUT Circuit Pack
- Checking the DS3SW Circuit Pack
- Checking the Cables

Sometimes you will use the steps in all three sections to clear the PAINTGRT condition; other times only the first, or first and second, sections will be needed. *However, regardless of the number of sections you use, the steps must be executed in the order presented.*

CAUTION:
Electrostatic discharge (ESD) damage.
ESD can cause damage to the components of a DACS III-2000 system.
Wear an ESD wrist strap when working around the frame.

Checking the STS1OUT Circuit Pack

1. Have the system output from Procedure 12-1, in which you identified the affected STS1OUT circuit pack, available for referencing.
2. Obtain a spare STS1OUT (ARW12) circuit pack.
   - If a spare circuit pack is not available, stop here and call your system administrator or the next level of technical support.
   - If a spare circuit pack is available, continue this procedure at Step 3.
3. At the craft interface terminal, verify that the STS1OUT circuit pack is in the out-of-service fault (OOS-FLT) state by entering:

   RTRV-STATE-EQPT::ELOC::ALL;

   where

   ELOC = the STS1OUT circuit pack identified in Step 1, specified as STS1OUT-{1 through 8}-{1 through 30}

   The system should respond with one of the messages that follow:

— For *Message Set 1*:

```
  <TID #n YY-MM-DD HH:MM:SS>
M  RTRV STATE EQPT::<ELOC>::ALL COMPLD
   /* LOC:STATE */
   " STS1OUT-<unit-slot>:OOS-FLT "
;
```

— For *Message Set 2*:

```
  <TID YY-MM-DD HH:MM:SS>
M  RTRV STATE EQPT::<ELOC>::ALL COMPLD
   " STS1OUT-<unit-slot>:OOS-FLT "
;
```

- If the system shows the STS1OUT circuit pack is out-of-service fault (OOS-FLT), continue this procedure at Step 4.
- If the system responds with any other state, stop here and call your system administrator or the next level of technical support.

4. At the craft interface terminal, verify that the related protection circuit packs are in the active (ACT) state by entering:

RTRV-STATE-EQPT::ELOC::ALL;

where

ELOC = the protection pack; identified as STS1OUT-{1 through 8}-P1&-P2

The system should respond with one of the following messages:

— For *Message Set 1*:

```
  <TID #n YY-MM-DD HH:MM:SS>
M  RTRV STATE EQPT::<ELOC>::ALL COMPLD
   /* LOC:STATE */
   " STS1OUT-<unit>-P1:ACT "
   " STS1OUT-<unit>-P2:ACT "
;
```

— For *Message Set 2*:

```
  <TID YY-MM-DD HH:MM:SS>
M  RTRV STATE EQPT::<ELOC>::ALL COMPLD
   " STS1OUT-<unit>-P1:ACT "
   " STS1OUT-<unit>-P2:ACT "
;
```

- If the system shows the protection circuit packs are active (ACT), continue this procedure at Step 5.
- If the system responds with any other state, stop here and call your system administrator or next level of technical support.

5. Go to the DACS III-2000 frame and remove the protected STS1OUT circuit pack that was identified in Step 1. If you need detailed instructions, see Procedure 3-2, "Removing Circuit Packs."

6. Using standard office procedures, write down the

   — serial number of the removed STS1OUT circuit pack

   — unit and slot from which it was removed.

   Set aside the removed STS1OUT circuit pack until the procedure instructs you to do something with it.

7. On the spare STS1OUT circuit pack, set the LBO to match those of the extracted STS1OUT circuit pack. If you need detailed instructions, see Procedure 3-6, "Setting Line Buildout (LBO)."

8. Insert the spare STS1OUT circuit pack into the empty slot. If you need detailed instructions, see Procedure 3-1, "Installing Circuit Packs."

9. At the craft interface terminal, check to see if the previous steps have cleared the problem by entering:

   TEST-PATH-STS1::::PAINTGRT;

   The system responds with one of the following messages:

   — For *Message Set 1*:

```
  <TID #n YY-MM-DD HH:MM:SS>
M  TEST PATH STS1::::PAINTGRT COMPLD
   /* EC1_IN,EC1_OUT:LOC,CHAN_OUT:LOC,CHAN_IN,
         CHAN_OUT:LOC,CHAN_IN:TAG:RESULT */
   " <EC1_IN,EC1_OUT:LOC,CHAN_OUT:LOC,CHAN_IN,
         CHAN_OUT:LOC,CHAN_IN:TAG:RESULT> "
;
```

   — For *Message Set 2*:

```
  <TID YY-MM-DD HH:MM:SS>
M  TEST PATH STS1::::PAINTGRT COMPLD
   " <EC1_IN,EC1_OUT:LOC,CHAN_OUT:LOC,CHAN_IN,
         CHAN_OUT:LOC,CHAN_IN:TAG:RESULT> "
;
```

   where

   `LOC` = the STS1OUT circuit pack location

   `RESULT` = the test results; `NULL` means that the test could not be run at the time it was requested, `PASS` means the specified path is fault-free, `FAIL` means the associated path is failed

- If the system responds with NULL, continue this procedure at Step 10.
- If the system responds with PASS, continue this procedure at Step 11.
- If the system responds with FAIL, continue this procedure at Step 12, "Checking the DS3SW Circuit Pack."

10. Having received a NULL response, check to see that *all* the statements that follow are true:

    a. The input and output unit controllers, associated with the STS1OUT circuit pack identified in Step 1, are in the in-service (IS) state.

    b. The protection switch circuit packs within the input unit, associated with the STS1OUT circuit pack identified in Step 1, are in the in-service (IS) state.

    c. The circuit packs along the failed path, associated with the STS1OUT circuit pack identified in Step 1, are present and provisioned and have no active failure conditions other than the PAINTGRT condition.

    d. The input port, associated with the STS1OUT circuit pack identified in Step 1, has a valid incoming STS-1 signal present.

    Do one of the following:

    - If this is the first time you received the NULL response and all of the previous statements are *true*, you have a problem that needs to be reported to your system administrator or next level of technical support.
    - If this is the first time you received the NULL response and any or all of the previous statements are *false*, correct the situation(s) and repeat Step 9 from the beginning.
    - If this is the second time you have executed Step 9 and received the NULL response, stop here and call your system administrator or the next level of technical support.

11. Having received the PASS response, perform the following steps:

    a. Check the craft interface terminal for one of the following autonomous messages:

    — For *Message Set 1*:

```
  <TID #n YY-MM-DD HH:MM:SS>
A <ASEQ> REPT SW EQPT
   /* WORKING ENTITY,SWITCH DIRECTION */
   " <WORKING ENTITY>,WKG "
;
```

— For *Message Set 2*:

```
  <TID YY-MM-DD HH:MM:SS>
A <ASEQ> REPT SW EQPT
   " <WORKING ENTITY>,WKG "
;
```

where

WORKING ENTITY = the STS1OUT circuit pack identified in Step 1

b. Verify that the STS1OUT circuit pack identified in Step 1 no longer generates an alarm, by entering the two commands that follow:

RTRV-ALM-EQPT::ALL::,PAINTGRT;

and

RTRV-PATH-STS1::ALL::PAINTGRT;

In both system responses, the STS1OUT circuit pack identified in Step 1 should *not* appear in the message.

c. Using standard office procedures, label and record the STS1OUT circuit pack, set aside in Step 6, as failed and in need of repair. If you need instructions for returning a failed circuit pack, see Procedure 3-11, "Returning Circuit Packs for Repair."

d. You have successfully corrected the problem. If more alarms exist on the frame, return to Procedure 9-1, "How to Clear Alarms," to determine the next corrective action to take.

Checking the DS3SW Circuit Pack

12. Having received the FAIL response, check for the DS3SW circuit pack that is associated with the failed path by entering:

RTRV-PATH-STS1::ALL::PAINTGRT;

The system should respond with one of the following messages:

— For *Message Set 1*:

```
  <TID #n YY-MM-DD HH:MM:SS>
M  RTRV PATH STS1::: COMPLD
   /* EC1_IN,EC1_OUT:LOC,CHAN_OUT:LOC,CHAN_IN,
         CHAN_OUT:LOC,CHAN_IN */
   " <EC1_IN,EC1_OUT:LOC,CHAN_OUT:LOC,CHAN_IN,
         CHAN_OUT:LOC,CHAN_IN> "
;
```

— For *Message Set 2*:

```
  <TID YY-MM-DD HH:MM:SS>
M  RTRV PATH STS1::: COMPLD
   " <EC1_IN,EC1_OUT:LOC,CHAN_OUT:LOC,CHAN_IN,
        CHAN_OUT:LOC,CHAN_IN> "
;
```

- If the system responds with COMPLD, perform the following steps:

  a. Write down the location of the DS3SW circuit pack identified in the message. The second LOC parameter shows the DS3SW location, specified as DS3SW-{1 through 4}-{1 through 16}.

     Remember, when you look at the frame this DS3SW circuit pack will *not* have a lighted red LED.

  b. Continue this procedure at Step 13.

- If the system responds with DENY, stop here and call your system administrator or the next level of technical support.

13. Obtain a spare DS3SW (AWL1 or AYJ1) circuit pack.

    - If a spare circuit pack is not available, stop here and call your system administrator or the next level of technical support.
    - If a spare circuit pack is available, continue this procedure at Step 14.

14. Switch the DS3SW circuit pack to protection by entering:

    SW-TOPROTN-EQPT::ELOC;

    where

    ELOC = the DS3SW circuit pack identified in Step 12, specified as DS3SW-{1 through 4}-{1 through 16}

15. Go to the DACS III-2000 frame and remove the DS3SW circuit pack that was identified in Step 12.

    - If you are working on a 1024-size frame and need detailed instructions, see Procedure 3-2, "Removing Circuit Packs."
    - If you are working on a 2048-size frame and need detailed instructions, see Procedure 3-4, "Removing DS3SWL CTR Circuit Packs."

16. Using standard office procedures, write down the

    — serial number of the removed DS3SW circuit pack

    — slot from which it was removed.

    Set aside the removed DS3SW circuit pack until the procedure instructs you to do something with it.

17. Insert the spare DS3SW circuit pack into the empty slot.
    - If you are working on a 1024-size frame and need detailed instructions, see Procedure 3-1, "Installing Circuit Packs."
    - If you are working on a 2048-size frame and need detailed instructions, see Procedure 3-3, "Installing DS3SWL CTR Circuit Packs."
18. At the craft interface terminal, check to see if the previous steps have cleared the problem by entering:

    TEST-PATH-STS1::::PAINTGRT;

    The system responds with one of the following messages:

    — For *Message Set 1*:

```
  <TID #n YY-MM-DD HH:MM:SS>
M TEST PATH STS1::::PAINTGRT COMPLD
   /* EC1_IN,EC1_OUT:LOC,CHAN_OUT:LOC,CHAN_IN,
         CHAN_OUT:LOC,CHAN_IN:TAG:RESULT */
   " <EC1_IN,EC1_OUT:LOC,CHAN_OUT:LOC,CHAN_IN,
         CHAN_OUT:LOC,CHAN_IN:TAG:RESULT> "
;
```

    — For *Message Set 2*:

```
  <TID YY-MM-DD HH:MM:SS>
M TEST PATH STS1::::PAINTGRT COMPLD
   " <EC1_IN,EC1_OUT:LOC,CHAN_OUT:LOC,CHAN_IN,
         CHAN_OUT:LOC,CHAN_IN:TAG:RESULT> "
;
```

    where

    LOC = the DS3SW circuit pack location identified in Step 12, specified as DS3SW-{1 through 4}-{1 through 16}

    RESULT = the test results; NULL means that the test could not be run at the time it was requested, PASS means the specified path is fault-free, FAIL means the associated path is failed

    Do one of the following:

    - If the system responds with NULL, continue this procedure at Step 19.
    - If the system responds with PASS, continue this procedure at Step 20.
    - If the system responds with FAIL, continue this procedure at Step 21, "Checking the Cables."

19. Having received a NULL response, check to see that *all* the statements that follow are true:

    a. The input and output unit controllers, associated with the STS1OUT circuit pack identified in Step 1, are in the in-service (IS) state.

    b. The protection switch circuit packs within the input unit, associated with the STS1OUT circuit pack identified in Step 1, are in the in-service (IS) state.

    c. The circuit packs along the failed path, associated with the STS1OUT circuit pack identified in Step 1, are present and provisioned and have no active failure conditions other than the PAINTGRT condition.

    d. The input port, associated with the STS1OUT circuit pack identified in Step 1, has a valid incoming STS-1 signal present.

    Do one of the following:

    - If this is the first time you received the NULL response and all of the previous statements are *true*, you have a problem that needs to be reported to your system administrator or next level of technical support.
    - If this is the first time you received the NULL response and any or all of the previous statements are *false*, correct the situation(s) and repeat Step 18 from the beginning.
    - If this is the second time you have executed Step 18 and received the NULL response, stop here and call your system administrator or the next level of technical support.

20. Having received the PASS response, perform the following steps:

    a. Check the craft interface terminal for one of the following autonomous messages:

    — For *Message Set 1*:

```
  <TID #n YY-MM-DD HH:MM:SS>
A <ASEQ> REPT SW EQPT
   /* WORKING ENTITY,SWITCH DIRECTION */
   " <WORKING ENTITY>,WKG "
;
```

    — For *Message Set 2*:

```
  <TID YY-MM-DD HH:MM:SS>
A <ASEQ> REPT SW EQPT
   " <WORKING ENTITY>,WKG "
;
```

    where

    WORKING ENTITY = the STS1OUT circuit pack identified in Step 1

b. Verify that the STS1OUT circuit pack identified in Step 1 no longer generates an alarm, by entering the two commands that follow:

RTRV-ALM-EQPT::ALL::,PAINTGRT;

and

RTRV-PATH-STS1::ALL::PAINTGRT;

In both system responses, the STS1OUT circuit pack identified in Step 1 should *not* appear in the message and the red LED should no longer be lighted.

c. At the craft interface terminal, switch the DS3SW to a working state by entering:

ALW-SW-EQPT::ELOC::WKG;

where

ELOC = the DS3SW circuit pack location identified in Step 12, specified by DS3SW-{1 through 4}-{1 through 16}

d. Verify a successful switch to working of the DS3SW circuit pack identified in Step 12 by entering:

RTRV-STATE-EQPT::ELOC;

where

ELOC = the DS3SW circuit pack

The system output should be one of the following messages:

— For *Message Set 1*:

```
  <TID #n YY-MM-DD HH:MM:SS>
M  RTRV STATE EQPT::<ELOC>::ALL COMPLD
   /* LOC:STATE */
   " <LOC>:ACT "
;
```

— For *Message Set 2*:

```
  <TID YY-MM-DD HH:MM:SS>
M  RTRV STATE EQPT::<ELOC>::ALL COMPLD
   " <LOC>:ACT "
;
```

where

LOC = the DS3SW circuit pack identified in Step 12

- If the system shows the DS3SW circuit pack identified in Step 12 is active (ACT), continue this procedure at Step 20e.
- If the system responds with any other state, stop here and call your system administrator or the next level of technical support.

e. Using standard office procedures, label and record the DS3SW circuit pack, set aside in Step 16, as failed and in need of repair. If you need instructions for returning a failed circuit pack, see Procedure 3-11, "Returning Circuit Packs for Repair."

f. Since the original STS1OUT circuit pack is not at fault, it can be put in the spares storage cabinet for future use.

g. You have successfully corrected the problem. If more alarms exist on the frame, return to Procedure 9-1, "How to Clear Alarms," to determine the next corrective action to take.

Checking the Cables

21. Having received the FAIL response, identify the failed cable by entering:

RTRV-CABLE-STS1::ALL::PAINTGRT;

The system responds with one of the following messages:

— For *Message Set 1*:

```
  <TID #n YY-MM-DD HH:MM:SS>
M  RTRV CABLE STS1::::PAINTGRT COMPLD
   /* STS1IN,CABLE,PIN #:DS3SW_IN,CABLE,PIN #:
         DS3SW_OUT,CABLE,PIN #:STS1OUT,CABLE,PIN
# */
   " <STS1IN,CABLE,PIN #:DS3SW_IN,CABLE,PIN #:
         DS3SW_OUT,CABLE,PIN #:STS1OUT,CABLE,PIN
#> "
;
```

— For *Message Set 2*:

```
  <TID YY-MM-DD HH:MM:SS>
M RTRV CABLE STS1::::PAINTGRT COMPLD
" <STS1IN,CABLE,PIN #:DS3SW_IN,CABLE,PIN #:
      DS3SW_OUT,CABLE,PIN #:STS1OUT,CABLE,PIN #> "
;
```

Be certain to note the cable that is associated with the STS1OUT circuit pack identified in Step 1. The numbers in the CABLE field, those starting with J, correlate to the numbers on the octopus cable connectors attached to the backplane. The suspected cable segment will be that segment between the DS3 switch (DS3SW) module and the STS1 output interface (STS1OUT INTFC) module.

22. Make sure you have written down the failed cable's location for future use.
23. Wearing an ESD wrist strap, remove the backplane covers. Using the cable identification from Step 22, visually examine, at both ends, the cable that runs between the DS3SW module and the STS1OUT module.
24. Visually verify that the cable is correctly plugged in and that there are no offset, misaligned, or cocked connectors.
    - If you observe any of the above problems, continue this procedure at Step 25.
    - If you do *not* observe any problems with the cable, continue this procedure at Step 29.
25. Rectify the problem observed with the cable identified in Step 22.
26. At the craft interface terminal, check to see if the previous steps have cleared the problem by entering:

    TEST-PATH-STS1::::PAINTGRT;

    The system responds with one of the following messages:

    — For *Message Set 1*:

```
  <TID #n YY-MM-DD HH:MM:SS>
M TEST PATH STS1:::PAINTGRT COMPLD
   /* EC1_IN,EC1_OUT:LOC,CHAN_OUT:LOC,CHAN_IN,
         CHAN_OUT:LOC,CHAN_IN:TAG:RESULT */
   " <EC1_IN,EC1_OUT:LOC,CHAN_OUT:LOC,CHAN_IN,
         CHAN_OUT:LOC,CHAN_IN:TAG:RESULT> "
;
```

    — For *Message Set 2*:

```
  <TID YY-MM-DD HH:MM:SS>
M TEST PATH STS1:::PAINTGRT COMPLD
   " <EC1_IN,EC1_OUT:LOC,CHAN_OUT:LOC,CHAN_IN,
         CHAN_OUT:LOC,CHAN_IN:TAG:RESULT> "
;
```

    where

    `LOC` = the STS1OUT circuit pack location

    `RESULT` = the test results; `NULL` means that the test could not be run at the time it was requested, `PASS` means the specified path is fault-free, `FAIL` means the associated path is failed

- If the system responds with NULL, continue this procedure at Step 27.
- If the system responds with PASS, continue this procedure at Step 28.
- If the system responds with FAIL, continue this procedure at Step 29.

27. Having received a NULL response, check to see that *all* the statements that follow are true:

    a. The input and output unit controllers, associated with the STS1OUT circuit pack identified in Step 1, are in the in-service (IS) state.

    b. The protection switch circuit packs within the input unit, associated with the STS1OUT circuit pack identified in Step 1, are in the in-service (IS) state.

    c. The circuit packs along the failed path, associated with the STS1OUT circuit pack identified in Step 1, are present and provisioned and have no active failure conditions other than the PAINTGRT condition.

    d. The input port, associated with the STS1OUT circuit pack identified in Step 1, has a valid incoming STS-1 signal present.

    Do one of the following:

    - If this is the first time you received the NULL response and all of the previous statements are *true*, you have a problem that needs to be reported to your system administrator or next level of technical support.
    - If this is the first time you received the NULL response and any or all of the previous statements are *false*, correct the situation(s) and repeat Step 26 from the beginning.
    - If this is the second time you have executed Step 26 and received the NULL response, stop here and call your system administrator or the next level of technical support.

28. Having received the PASS response, perform the following steps:

    a. Check the craft interface terminal for one of the following autonomous messages:

    — For *Message Set 1*:

```
  <TID #n YY-MM-DD HH:MM:SS>
A <ASEQ> REPT SW EQPT
   /* WORKING ENTITY,SWITCH DIRECTION */
   " <WORKING ENTITY>,WKG "
;
```

— For *Message Set 2*:

```
  <TID YY-MM-DD HH:MM:SS>
A <ASEQ> REPT SW EQPT
    " <WORKING ENTITY>,WKG "
;
```

where

WORKING ENTITY = the STS1OUT circuit pack identified in Step 1

b. Verify that the STS1OUT circuit pack identified in Step 1 no longer generates an alarm, by entering the two commands that follow:

RTRV-ALM-EQPT::ALL::,PAINTGRT;

and

RTRV-PATH-STS1::ALL::PAINTGRT;

In both system responses, the STS1OUT circuit pack identified in Step 1 should *not* appear in the message and the red LED should no longer be lighted.

c. At the craft interface terminal, switch the DS3SW to a working state by entering:

ALW-SW-EQPT::ELOC::WKG;

where

ELOC = the DS3SW circuit pack identified in Step 12, specified as DS3SW-{1 through 4}-{1 through 16}

d. Verify a successful switch to working of the DS3SW circuit pack by entering:

RTRV-STATE-EQPT::ELOC;

where

ELOC = the DS3SW circuit pack identified in Step 12

The system response should be one of the following messages:

— For *Message Set 1*:

```
  <TID #n YY-MM-DD HH:MM:SS>
M  RTRV STATE EQPT::<ELOC>::ALL COMPLD
   /* LOC:STATE */
   " <LOC>:ACT "
;
```

— For *Message Set 2*:

```
  <TID YY-MM-DD HH:MM:SS>
M  RTRV STATE EQPT::<ELOC>::ALL COMPLD
   " <LOC>:ACT "
;
```

where

LOC = the DS3SW circuit pack identified in Step 12

e. Since the original STS1OUT and DS3SW circuit packs are not at fault, they can be put in the spares storage cabinet for future use.

f. Wearing an ESD wrist strap, reattach the backplane covers.

g. You have successfully corrected the problem. If more alarms exist on the frame, return to Procedure 9-1, "How to Clear Alarms," to determine the next corrective action to take.

29. Having arrived at this step because you did *not* observe cable problems in Step 24 or because you received the FAIL response in Step 26, call your system administrator or the next level of technical support to fix the cable. Note the number of this procedure and the number of the next step so that you can return to the correct location once the failed cable is repaired.

30. After the failed cable has been repaired by your system administrator or the next level of technical support, continue this procedure at Step 31.

31. At the craft interface terminal, verify that the problem has been corrected by entering:

TEST-PATH-STS1::::PAINTGRT;

The system responds with one of the following messages:

— For *Message Set 1*:

```
  <TID #n YY-MM-DD HH:MM:SS>
M  TEST PATH STS1::::PAINTGRT COMPLD
   /* EC1_IN,EC1_OUT:LOC,CHAN_OUT:LOC,CHAN_IN,
         CHAN_OUT:LOC,CHAN_IN:TAG:RESULT */
   " <EC1_IN,EC1_OUT:LOC,CHAN_OUT:LOC,CHAN_IN,
         CHAN_OUT:LOC,CHAN_IN:TAG:>PASS "
;
```

— For *Message Set 2*:

```
  <TID YY-MM-DD HH:MM:SS>
M  TEST PATH STS1::::PAINTGRT COMPLD
   " <EC1_IN,EC1_OUT:LOC,CHAN_OUT:LOC,CHAN_IN,
         CHAN_OUT:LOC,CHAN_IN:TAG:>PASS "
;
```

32. Verify that the system output is PASS. Having received the PASS response, perform the following steps:

    a. Check the craft interface terminal for one of the following autonomous messages:

    — For *Message Set 1*:

```
  <TID #n YY-MM-DD HH:MM:SS>
A <ASEQ> REPT SW EQPT
   /* WORKING ENTITY,SWITCH DIRECTION */
   " <WORKING ENTITY>,WKG "
;
```

    — For *Message Set 2*:

```
  <TID YY-MM-DD HH:MM:SS>
A <ASEQ> REPT SW EQPT
   " <WORKING ENTITY>,WKG "
;
```

    where

    WORKING ENTITY = the STS1OUT circuit pack identified in Step 1

    b. Verify that the STS1OUT circuit pack identified in Step 1 no longer generates an alarm, by entering the two commands that follow:

    RTRV-ALM-EQPT::ALL::,PAINTGRT;

    and

    RTRV-PATH-STS1::ALL::PAINTGRT;

    In both system responses, the STS1OUT circuit pack identified in Step 1 should *not* appear in the message and the red LED should no longer be lighted.

    c. At the craft interface terminal, switch the DS3SW to a working state by entering:

    ALW-SW-EQPT::ELOC::WKG;

    where

    ELOC = the DS3SW circuit pack identified in Step 12, specified as DS3SW-{1 through 4}-{1 through 16}

    d. Verify a successful switch to working of the DS3SW circuit pack by entering:

    RTRV-STATE-EQPT::ELOC;

    where

    ELOC = the DS3SW circuit pack identified in Step 12

The system response should be one of the following messages:

— For *Message Set 1*:

```
  <TID #n YY-MM-DD HH:MM:SS>
M  RTRV STATE EQPT::<ELOC>::ALL COMPLD
   /* LOC:STATE */
   " <LOC>:ACT "
;
```

— For *Message Set 2*:

```
  <TID YY-MM-DD HH:MM:SS>
M  RTRV STATE EQPT::<ELOC>::ALL COMPLD
   " <LOC>:ACT "
;
```

where

LOC = the DS3SW circuit pack identified in Step 12

e. Since the original STS1OUT and DS3SW circuit packs are not at fault, they can be put in the spares storage cabinet for future use.

f. Wearing an ESD wrist strap, reattach the backplane covers.

g. You have successfully corrected the problem. If more alarms exist on the frame, return to Procedure 9-1, "How to Clear Alarms" to determine the next corrective action to take.

Procedure 12-4. STS1IN:MN, PAINTGRT and DS3SW:MN, PAINTGRT, and STS1OUT:MN,PAINTGRT Alarms with No Other Circuit Packs Showing PAINTGRT

Please note that there are three sections within Procedure 12-4:

- Checking the DS3SW Circuit Pack
- Checking the Cables (Input side)
- Checking the Cables (Output side)

Sometimes you will use the steps in all sections to clear the PAINTGRT condition; other times only some of the sections will be needed. *However, regardless of the number of sections you use, the steps must be executed in the order presented.*

CAUTION:
Electrostatic discharge (ESD) damage.
ESD can cause damage to the components of a DACS III-2000 system.
Wear an ESD wrist strap when working around the frame.

Checking the DS3SW Circuit Pack

1. Have the system output from Procedure 12-1, in which you identified the affected STS1IN, DS3SW, and STS1OUT circuit packs, available for referencing.

WARNING:
Potential for service disruption.
Only one STS1IN, DS3SW, and STS1OUT circuit pack, and no other types of circuit packs, should have an active PAINTGRT condition.
If more than these three packs show PAINTGRT, do NOT execute this procedure. Return to Flowchart 12-1, "PAINTGRT Decision Tree," check the "Additional Conditions" column, and select the appropriate procedure.

2. Obtain a spare DS3SW (AWL1 or AYJ1) circuit pack.
   - If a spare circuit pack is not available, stop here and call your system administrator or the next level of technical support.
   - If a spare circuit pack is available, continue this procedure at Step 3.
3. At the craft interface terminal, verify that the DS3SW circuit pack is in the out-of-service fault (OOS-FLT) state by entering:

```
RTRV-STATE-EQPT::ELOC::ALL;
```

where

ELOC = the DS3SW circuit pack identified in Step 1, specified as DS3SW-{1 through 4}-{1 through 16}

The system should respond with one of the following messages:

— For *Message Set 1*:

```
  <TID #n YY-MM-DD HH:MM:SS>
M  RTRV STATE EQPT::<ELOC>::ALL COMPLD
   /* LOC:STATE */
   " DS3SW-<unit-slot>:OOS-FLT "
;
```

— For *Message Set 2*:

```
  <TID YY-MM-DD HH:MM:SS>
M  RTRV STATE EQPT::<ELOC>::ALL COMPLD
   " DS3SW-<unit-slot>:OOS-FLT "
;
```

- If the system shows the DS3SW circuit pack is out-of-service fault (OOS-FLT), continue this procedure at Step 4.
- If the system responds with any other state, stop here and call your system administrator or the next level of technical support.

4. At the craft interface terminal, verify that the protection circuit pack, related to the DS3SW circuit pack identified in Step 1, is in the active (ACT) state by entering:

RTRV-STATE-EQPT::ELOC::ALL;

where

ELOC = the protection packs; identified as DS3SW-1-16 for a 1024-size system; DS3SW-4-15&-16 for a 2048-size system

The system should respond with one of the following messages:

— For *Message Set 1*:

```
  <TID #n YY-MM-DD HH:MM:SS>
M RTRV STATE EQPT::<ELOC>::ALL COMPLD
   /* LOC:STATE */
   " DS3SW-<unit-slot>:ACT"
;
```

— For *Message Set 2*:

```
  <TID YY-MM-DD HH:MM:SS>
M  RTRV STATE EQPT::<ELOC>::ALL COMPLD
   " DS3SW-<unit-slot>:ACT"
;
```

- If the system shows the protection circuit pack is active (ACT), continue this procedure at Step 5.
- If the system responds with any other state, stop here and call your system administrator or the next level of technical support.

5. Go to the DACS III-2000 frame and remove the DS3SW circuit pack that was identified in Step 1.
   - If you are working on a 1024-size frame and need detailed instructions, see Procedure 3-2, "Removing Circuit Packs."
   - If you are working on a 2048-size frame and need detailed instructions, see Procedure 3-4, "Removing DS3SWL CTR Circuit Packs."
6. Using standard office procedures, write down the
   — serial number of the removed DS3SW circuit pack
   — slot from which it was removed.

   Set aside the removed DS3SW circuit pack until the procedure instructs you to do something with it.
7. Insert the spare DS3SW circuit pack into the empty slot.
   - If you are working on a 1024-size frame and need detailed instructions, see Procedure 3-1, "Installing Circuit Packs."
   - If you are working on a 2048-size frame and need detailed instructions, see Procedure 3-3, "Installing DS3SWL CTR Circuit Packs."
8. At the craft interface terminal, check to see if the previous steps have cleared the problem by entering:

   TEST-PATH-STS1::::PAINTGRT;

   The system responds with one of the following messages:

   — For *Message Set 1*:

```
  <TID #n YY-MM-DD HH:MM:SS>
M  TEST PATH STS1::::PAINTGRT COMPLD
   /* EC1_IN,EC1_OUT:LOC,CHAN_OUT:LOC,CHAN_IN,
         CHAN_OUT:LOC,CHAN_IN:TAG:RESULT */
   " <EC1_IN,EC1_OUT:LOC,CHAN_OUT:LOC,CHAN_IN,
         CHAN_OUT:LOC,CHAN_IN:TAG:RESULT> "
;
```

   — For *Message Set 2*:

```
  <TID YY-MM-DD HH:MM:SS>
M  TEST PATH STS1::::PAINTGRT COMPLD
   " <EC1_IN,EC1_OUT:LOC,CHAN_OUT:LOC,CHAN_IN,
         CHAN_OUT:LOC,CHAN_IN:TAG:RESULT> "
;
```

where

LOC = the DS3SW circuit pack location identified in Step 1, specified as DS3SW-{1 through 4}-{1 through 16}

RESULT = the test results; NULL means that the test could not be run at the time it was requested, PASS means the specified path is fault-free, FAIL means the associated path is failed

Do one of the following:

- If the system responds with NULL, continue this procedure at Step 9.
- If the system responds with PASS, continue this procedure at Step 10.
- If the system responds with FAIL, continue this procedure at Step 11.

9. Having received a NULL response, check to see that *all* the statements that follow are true:

   a. The input and output unit controllers, associated with the STS1IN circuit pack identified in Step 1, are in the in-service (IS) state.

   b. The protection switch circuit packs within the input unit, associated with the STS1IN circuit pack identified in Step 1, are in the in-service (IS) state.

   c. The circuit packs along the failed path, associated with the STS1IN circuit pack identified in Step 1, are present and provisioned and have no active failure conditions other than the PAINTGRT condition.

   d. The input port, associated with the STS1IN circuit pack identified in Step 1, has a valid incoming STS-1 signal present.

   Do one of the following:

   - If this is the first time you received the NULL response and all of the previous statements are *true*, you have a problem that needs to be reported to your system administrator or next level of technical support.
   - If this is the first time you received the NULL response and any or all of the previous statements are *false*, correct the situation(s) and repeat Step 8 from the beginning.
   - If this is the second time you have executed Step 8 and received the NULL response, stop here and call your system administrator or the next level of technical support.

10. Having received the PASS response, perform the following steps:

    a. Check the craft interface terminal for the three autonomous messages that follow:

— First message for *Message Set 1*:

```
  <TID #n YY-MM-DD HH:MM:SS>
A <ASEQ> REPT SW EQPT
    /* WORKING ENTITY,SWITCH DIRECTION */
    " <WORKING ENTITY>,WKG "
;
```

— First message for *Message Set 2*:

```
  <TID YY-MM-DD HH:MM:SS>
A <ASEQ> REPT SW EQPT
    " <WORKING ENTITY>,WKG "
;
```

where

`WORKING ENTITY` = the STS1IN circuit pack identified in Step 1

— Second message for *Message Set 1*:

```
  <TID #n YY-MM-DD HH:MM:SS>
A <ASEQ> REPT SW EQPT
    /* WORKING ENTITY,SWITCH DIRECTION */
    " <WORKING ENTITY>,WKG "
;
```

— Second message for *Message Set 2*:

```
  <TID YY-MM-DD HH:MM:SS>
A <ASEQ> REPT SW EQPT
    " <WORKING ENTITY>,WKG "
;
```

where

`WORKING ENTITY`= the DS3SW circuit pack identified in Step 1

— Third message for *Message Set 1*:

```
  <TID #n YY-MM-DD HH:MM:SS>
A <ASEQ> REPT SW EQPT
    /* WORKING ENTITY,SWITCH DIRECTION */
    " <WORKING ENTITY>,WKG "
;
```

— Third message for *Message Set 2*:

```
  <TID YY-MM-DD HH:MM:SS>
A <ASEQ> REPT SW EQPT
    " <WORKING ENTITY>,WKG "
;
```

where

`WORKING ENTITY`= the STS1OUT circuit pack identified in Step 1

b. Verify that the STS1IN, DS3SW, and STS1OUT circuit packs identified in Step 1 no longer generate alarms by entering the two commands that follow:

— For *Message Set 1*:

RTRV-ALM-EQPT::ALL::,PAINTGRT;

and

RTRV-PATH-STS1::ALL::PAINTGRT;

— For *Message Set 2*:

RTRV-ALM-EQPT::ALL:::,PAINTGRT;

and

RTRV-PATH-STS1::ALL::PAINTGRT;

In both system responses, the STS1IN, DS3SW, and STS1OUT circuit packs identified in Step 1 should *not* appear in the message and the red LEDs should no longer be lighted.

c. Using standard office procedures, label and record the DS3SW circuit pack, set aside in Step 6, as failed and in need of repair. If you need instructions for returning a failed circuit pack, see Procedure 3-11, "Returning Circuit Packs for Repair."

d. You have successfully corrected the problem. If more alarms exist on the frame, return to Procedure 9-1, "How to Clear Alarms," to determine the next corrective action to take.

Checking the Cables (Input Side)

11. Having received the fail response, identify the failed input cable by entering:

RTRV-CABLE-STS1::ALL::PAINTGRT;

The system responds with one of the following messages:

— For *Message Set 1*:

```
  <TID #n YY-MM-DD HH:MM:SS>
M   RTRV CABLE STS1::ALL::PAINTGRT COMPLD
    /* STS1IN,CABLE,PIN #:DS3SW_IN,CABLE,PIN #:
        DS3SW_OUT,CABLE,PIN #:STS1OUT,CABLE,
         PIN # */
    " <STS1IN,CABLE,PIN #:DS3SW_IN,CABLE,PIN #:
        DS3SW_OUT,CABLE,PIN #:STS1OUT,CABLE,
         PIN #> "
;
```

— For *Message Set 2*:

```
  <TID YY-MM-DD HH:MM:SS>
M  RTRV CABLE STS1::ALL::PAINTGRT COMPLD
   " <STS1IN,CABLE,PIN #:DS3SW_IN,CABLE,PIN #:
        DS3SW_OUT,CABLE,PIN #:STS1OUT,CABLE,
         PIN #> "
;
```

Be certain to note the cable that is associated with the STS1IN circuit pack identified in Step 1. The numbers in the CABLE field, those starting with J, correlate to the numbers on the octopus cable connectors attached to the backplane. The suspected cable segment will be that segment between the STS1 input interface (STS1IN INTFC) module and the DS3 switch (DS3SW) module.

12. Make sure you have written down the failed cable's location for future use.
13. Wearing an ESD wrist strap, remove the backplane covers. Using the cable identification from Step 12, visually examine, at both ends, the cable that runs between the STS1IN module and the DS3SW module.
14. Visually verify that the cable is correctly plugged in and that there are no offset, misaligned, or cocked connectors.
    - If you observe any of the above problems, continue this procedure at Step 15.
    - If you do *not* observe any problems with the cable, continue this procedure at Step 19.
15. Rectify the problem observed with the cable identified in Step 12.
16. At the craft interface terminal, check to see if the previous steps have cleared the problem by entering:

    TEST-PATH-STS1::::PAINTGRT;

    The system responds with one of the following messages:

    — For *Message Set 1*:

```
  <TID #n YY-MM-DD HH:MM:SS>
M  TEST PATH STS1:::PAINTGRT COMPLD
   /* STS1_IN,STS1_OUT:LOC,CHAN_OUT:LOC,CHAN_IN,
          CHAN_OUT:LOC,CHAN_IN:TAG:RESULT */
   " <STS1_IN,STS1_OUT:LOC,CHAN_OUT:LOC,CHAN_IN,
          CHAN_OUT:LOC,CHAN_IN:TAG:RESULT> "
;
```

— For *Message Set 2*:

```
  <TID YY-MM-DD HH:MM:SS>
M  TEST PATH STS1:::PAINTGRT COMPLD
   " <STS1_IN,STS1_OUT:LOC,CHAN_OUT:LOC,CHAN_IN,
          CHAN_OUT:LOC,CHAN_IN:TAG:RESULT> "
;
```

where

LOC = the DS3SW circuit pack location

RESULT = the test results; NULL means that the test could not be run at the time it was requested, PASS means the specified path is fault-free, FAIL means the associated path is failed

Do one of the following:

- If the system responds with NULL, continue this procedure at Step 17.
- If the system responds with PASS, continue this procedure at Step 18.
- If the system responds with FAIL, continue this procedure at Step 19.

17. Having received a NULL response, check to see that *all* the statements that follow are true:

    a. The input and output unit controllers, associated with the STS1IN circuit pack identified in Step 1, are in the in-service (IS) state.

    b. The protection switch circuit packs within the input unit, associated with the STS1IN circuit pack identified in Step 1, are in the in-service (IS) state.

    c. The circuit packs along the failed path, associated with the STS1IN circuit pack identified in Step 1, are present and provisioned and have no active failure conditions other than the PAINTGRT condition.

    d. The input port, associated with the STS1IN circuit pack identified in Step 1, has a valid incoming STS-1 signal present.

    Do one of the following:

    - If this is the first time you received the NULL response and all of the previous statements are *true*, you have a problem that needs to be reported to your system administrator or next level of technical support.
    - If this is the first time you received the NULL response and any or all of the previous statements are *false*, correct the situation(s) and repeat Step16 from the beginning.

- If this is the second time you have executed Step 16 and received the NULL response, stop here and call your system administrator or the next level of technical support.

18. Having received the PASS response, perform the following steps:

    a. Check the craft interface terminal for the three REPT ALM EQPT and REPT SW EQPT autonomous messages that follow:

    — First message for *Message Set 1*:

```
  <TID #n YY-MM-DD HH:MM:SS>
<ALCD ASEQ> REPT ALM EQPT
  /* LOC:NTFCNCDE,CONDTYPE,SRVEFF:TROUBLE */
   "<LOC:NTFCNCDE,CONDTYPE,SRVEFF:TROUBLE>"
;

  <TID #n YY-MM-DD HH:MM:SS>
A <ASEQ> REPT SW EQPT
   /* WORKING ENTITY,SWITCH DIRECTION */
   " <WORKING ENTITY>,WKG "
;
```

    — First message for *Message Set 2*:

```
  <TID YY-MM-DD HH:MM:SS>
<ALCD ASEQ> REPT ALM EQPT
"<LOC:NTFCNCDE,CONDTYPE,SRVEFF,,,,::,TROUBLE>"
;

  <TID YY-MM-DD HH:MM:SS>
A <ASEQ> REPT SW EQPT
   " <WORKING ENTITY>,WKG "
;
```

where

WORKING ENTITY= the STS1IN circuit pack identified in Step 1

    — Second message for *Message Set 1*:

```
  <TID #n YY-MM-DD HH:MM:SS>
<ALCD ASEQ> REPT ALM EQPT
  /* LOC:NTFCNCDE,CONDTYPE,SRVEFF:TROUBLE */
   "<LOC:NTFCNCDE,CONDTYPE,SRVEFF:TROUBLE>"

  <TID #n YY-MM-DD HH:MM:SS>
A <ASEQ> REPT SW EQPT
   /* WORKING ENTITY,SWITCH DIRECTION */
   " <WORKING ENTITY>,WKG "
;
```

— Second message for *Message Set 2*:

```
  <TID YY-MM-DD HH:MM:SS>
<ALCD ASEQ> REPT ALM EQPT
"<LOC:NTFCNCDE,CONDTYPE,SRVEFF,,,,::,TROUBLE>"
;

  <TID YY-MM-DD HH:MM:SS>
A <ASEQ> REPT SW EQPT
   " <WORKING ENTITY>,WKG "
;
```

where

WORKING ENTITY=the DS3SW circuit pack identified in Step 1

— Third message for *Message Set 1*:

```
  <TID #n YY-MM-DD HH:MM:SS>
<ALCD ASEQ> REPT ALM EQPT
  /* LOC:NTFCNCDE,CONDTYPE,SRVEFF:TROUBLE */
   "<LOC:NTFCNCDE,CONDTYPE,SRVEFF:TROUBLE>"
  ;

  <TID #n YY-MM-DD HH:MM:SS>
A <ASEQ> REPT SW EQPT
   /* WORKING ENTITY,SWITCH DIRECTION */
   " <WORKING ENTITY>,WKG "
;
```

— Third message for *Message Set 2*:

```
  <TID YY-MM-DD HH:MM:SS>
<ALCD ASEQ> REPT ALM EQPT
"<LOC:NTFCNCDE,CONDTYPE,SRVEFF,,,,::,TROUBLE>"
;

  <TID YY-MM-DD HH:MM:SS>
A <ASEQ> REPT SW EQPT
   " <WORKING ENTITY>,WKG "
;
```

where

WORKING ENTITY=the STS1OUT circuit pack identified in Step 1

b. Verify that the STS1IN, DS3SW, and STS1OUT circuit packs identified in Step 1 no longer generate alarms by entering the two commands that follow:

— For *Message Set 1*:

RTRV-ALM-EQPT::ALL::,PAINTGRT;

and

RTRV-PATH-STS1::ALL::PAINTGRT;

— For *Message Set 2*:

RTRV-ALM-EQPT::ALL:::,PAINTGRT;

and

RTRV-PATH-STS1::ALL::PAINTGRT;

In both system responses, the STS1IN, DS3SW, and STS1OUT circuit packs identified in Step 1 should *not* appear in the message and the red LEDs should no longer be lighted.

c. Since the original DS3SW circuit packs is not at fault, it can be put in the spares storage cabinet for future use.

d. Wearing an ESD wrist strap, reattach the backplane covers.

e. You have successfully corrected the problem. If more alarms exist on the frame, return to Procedure 9-1, "How to Clear Alarms," to determine the next corrective action to take.

Checking the Cables (Output Side)

19. Having arrived at this step because you did not observe cable problems in Step 14 or because you received the FAIL response in Step 16, identify the failed output cable by entering:

RTRV-CABLE-STS1::ALL::PAINTGRT;

The system responds with one of the following messages:

— For *Message Set 1*:

```
  <TID #n YY-MM-DD HH:MM:SS>
M  RTRV CABLE STS1::::PAINTGRT COMPLD
  /* STS1IN,CABLE,PIN #:DS3SW_IN,CABLE,PIN #:
     DS3SW_OUT,CABLE,PIN #:STS1OUT,CABLE,PIN # */
  " <STS1IN,CABLE,PIN #:DS3SW_IN,CABLE,PIN #:
     DS3SW_OUT,CABLE,PIN #:STS1OUT,CABLE,PIN #> "
;
```

— For *Message Set 2*:

```
  <TID YY-MM-DD HH:MM:SS>
M  RTRV CABLE STS1::::PAINTGRT COMPLD
   " <STS1IN,CABLE,PIN #:DS3SW_IN,CABLE,PIN #:
     DS3SW_OUT,CABLE,PIN #:STS1OUT,CABLE,PIN #> "
;
```

Note the cable that is associated with the STS1OUT circuit pack identified in Step 1. The numbers in the *CABLE* field, those starting with *J*, correlate to the numbers on the octopus cable connectors attached to the backplane. The suspected cable segment will be that segment between the DS3 switch (DS3SW) module and the STS1 output interface (STS1OUT INTFC) module.

20. Make sure you have written down the failed cable's location for future use.
21. Wearing an ESD wrist strap, remove the backplane covers. Using the cable identification from Step 20, visually examine, at both ends, the cable that runs between the DS3SW module and the STS1OUT module.
22. Visually verify that the cable is correctly plugged in and that there are no offset, misaligned, or cocked connectors.
    - If you observe any of the above problems, continue this procedure at Step 23.
    - If you do *not* observe any problems with the cable, continue this procedure at Step 27.
23. Rectify the problem observed with the cable identified in Step 20.
24. At the craft interface terminal, check to see if the previous steps have cleared the problem by entering:

    TEST-PATH-STS1::::PAINTGRT;

    The system responds with one of the following messages:

    — For *Message Set 1*:

```
  <TID #n YY-MM-DD HH:MM:SS>
M  TEST PATH STS1:::PAINTGRT COMPLD
   /* STS1_IN,STS1_OUT:LOC,CHAN_OUT:LOC,CHAN_IN,
         CHAN_OUT:LOC,CHAN_IN:TAG:RESULT */
   " <STS1_IN,STS1_OUT:LOC,CHAN_OUT:LOC,CHAN_IN,
         CHAN_OUT:LOC,CHAN_IN:TAG:RESULT> "
;
```

    — For *Message Set 2*:

```
  <TID YY-MM-DD HH:MM:SS>
M  TEST PATH STS1:::PAINTGRT COMPLD
   " <STS1_IN,STS1_OUT:LOC,CHAN_OUT:LOC,CHAN_IN,
         CHAN_OUT:LOC,CHAN_IN:TAG:RESULT> "
;
```

    where

    LOC = the DS3SW circuit pack location

    RESULT= the test results; NULL means that the test could not be run at the time it was requested, PASS means the specified path is fault-free, FAIL means the associated path is failed

    Do one of the following:

    - If the system responds with NULL, continue this procedure at Step 25.
    - If the system responds with PASS, continue this procedure at Step 26.

- If the system responds with FAIL, continue this procedure at Step 27.

25. Having received a NULL response, check to see that *all* the statements that follow are true:

    a. The input and output unit controllers, associated with the STS1OUT circuit pack identified in Step 1, are in the in-service (IS) state.

    b. The protection switch circuit packs within the input unit, associated with the STS1OUT circuit pack identified in Step 1, are in the in-service (IS) state.

    c. The circuit packs along the failed path, associated with the STS1OUT circuit pack identified in Step 1, are present and provisioned and have no active failure conditions other than the PAINTGRT condition.

    Do one of the following:

    - If this is the first time you received the NULL response and all of the previous statements are *true*, you have a problem that needs to be reported to your system administrator or next level of technical support.
    - If this is the first time you received the NULL response and any or all of the previous statements are *false*, correct the situation(s) and repeat Step 24 from the beginning.
    - If this is the second time you have executed Step 24 and received the NULL response, stop here and call your system administrator or the next level of technical support.

26. Having received the PASS response, perform the following steps:

    a. Check the craft interface terminal for the three autonomous messages that follow:

    — First message for *Message Set 1*:

```
  <TID #n YY-MM-DD HH:MM:SS>
A <ASEQ> REPT SW EQPT
    /* WORKING ENTITY,SWITCH DIRECTION */
    " <WORKING ENTITY>,WKG "
;
```

    — First message for *Message Set 2*:

```
  <TID YY-MM-DD HH:MM:SS>
A <ASEQ> REPT SW EQPT
    " <WORKING ENTITY>,WKG "
;
```

    where

    WORKING ENTITY = the STS1IN circuit pack identified in Step 1

— Second message for *Message Set 1*:

```
  <TID #n YY-MM-DD HH:MM:SS>
A <ASEQ> REPT SW EQPT
   /* WORKING ENTITY,SWITCH DIRECTION */
   " <WORKING ENTITY>,WKG "
;
```

— Second message for *Message Set 2*:

```
  <TID YY-MM-DD HH:MM:SS>
A <ASEQ> REPT SW EQPT
  " <WORKING ENTITY>,WKG "
;
```

where

`WORKING ENTITY`= the DS3SW circuit pack identified in Step 1

— Third message for *Message Set 1*:

```
  <TID #n YY-MM-DD HH:MM:SS>
A <ASEQ> REPT SW EQPT
   /* WORKING ENTITY,SWITCH DIRECTION */
   " <WORKING ENTITY>,WKG "
;
```

— Third message for *Message Set 2*:

```
  <TID YY-MM-DD HH:MM:SS>
A <ASEQ> REPT SW EQPT
  " <WORKING ENTITY>,WKG "
;
```

where

`WORKING ENTITY`= the STS!OUT circuit pack identified in Step 1

b. Verify that the STS1IN, DS3SW, and STS1OUT circuit packs identified in Step 1 no longer generate alarms by entering the two commands that follow:

— For *Message Set 1*:

`RTRV-ALM-EQPT::ALL::,PAINTGRT;`

and

`RTRV-PATH-STS1::ALL::PAINTGRT;`

— For *Message Set 2*:

`RTRV-ALM-EQPT::ALL:::,PAINTGRT;`

and

`RTRV-PATH-STS1::ALL::PAINTGRT;`

In both system responses, the STS1IN, DS3SW, and STS1OUT circuit packs identified in Step 1 should *not* appear in the message and the red LEDs should no longer be lighted.

c. Since the original DS3SW circuit pack is not at fault, it can be put in the spares storage cabinet for future use.

d. Wearing an ESD wrist strap, reattach the backplane covers.

e. You have successfully corrected the problem. If more alarms exist on the frame, return to Procedure 9-1, "How to Clear Alarms," to determine the next corrective action to take.

27. Having arrived at this step because you did *not* observe cable problems in Step 22 or because you received the FAIL response in Step 24, call your system administrator or the next level of technical support to fix the cable. Note the number of this procedure and the number of the next step so that you can return to the correct location once the failed cable is repaired.

28. After the failed cable has been repaired by your system administrator or the next level of technical support, continue this procedure at Step 29.

29. At the craft interface terminal, verify that the problem has been corrected by entering:

TEST-PATH-STS1::::PAINTGRT;

The system responds with one of the following messages:

— For *Message Set 1*:

```
  <TID #n YY-MM-DD HH:MM:SS>
M  TEST PATH STS1::::PAINTGRT COMPLD
   /* STS1_IN,STS1_OUT:LOC,CHAN_OUT:LOC,CHAN_IN,
         CHAN_OUT:LOC,CHAN_IN:TAG:RESULT */
   " <STS1_IN,STS1_OUT:LOC,CHAN_OUT:LOC,CHAN_IN,
    CHAN_OUT:LOC,CHAN_IN:TAG:>PASS "
;
```

— For *Message Set 2*:

```
  <TID YY-MM-DD HH:MM:SS>
M  TEST PATH STS1::::PAINTGRT COMPLD
   " <STS1_IN,STS1_OUT:LOC,CHAN_OUT:LOC,CHAN_IN,
         CHAN_OUT:LOC,CHAN_IN:TAG:>PASS "
;
```

30. Verify that the system output is **PASS**. Having received the **PASS** response, perform the following steps:

    a. Check the craft interface terminal for the three autonomous messages that follow:

    — First message for *Message Set 1*:

```
  <TID #n YY-MM-DD HH:MM:SS>
A <ASEQ> REPT SW EQPT
   /* WORKING ENTITY,SWITCH DIRECTION */
   " <WORKING ENTITY>,WKG "
;
```

    — First message for *Message Set 2*:

```
  <TID YY-MM-DD HH:MM:SS>
A <ASEQ> REPT SW EQPT
   " <WORKING ENTITY>,WKG "
;
```

where

`WORKING ENTITY` = the STS1IN circuit pack identified in Step 1

    — Second message for *Message Set 1*:

```
  <TID #n YY-MM-DD HH:MM:SS>
A <ASEQ> REPT SW EQPT
   /* WORKING ENTITY,SWITCH DIRECTION */
   " <WORKING ENTITY>,WKG "
;
```

    — Second message for *Message Set 2*:

```
  <TID YY-MM-DD HH:MM:SS>
A <ASEQ> REPT SW EQPT
   " <WORKING ENTITY>,WKG "
;
```

where

`WORKING ENTITY` = the DS3SW circuit pack identified in Step 1.

    — Third message for *Message Set 1*:

```
  <TID #n YY-MM-DD HH:MM:SS>
A <ASEQ> REPT SW EQPT
   /* WORKING ENTITY,SWITCH DIRECTION */
   " <WORKING ENTITY>,WKG "
;
```

— Third message for *Message Set 2*:

```
  <TID YY-MM-DD HH:MM:SS>
A <ASEQ> REPT SW EQPT
   " <WORKING ENTITY>,WKG "
;
```

where

`WORKING ENTITY` = the STS1OUT circuit pack identified in Step 1

In both system responses, the STS1IN, DS3SW, and STS1OUT circuit packs identified in Step 1 should *not* appear in the message and the red LEDs should no longer be lighted.

b. Verify that the STS1IN, DS3SW, and STS1OUT circuit packs identified in Step 1 no longer generate alarms by entering the two commands that follow:

— For *Message Set 1*:

RTRV-ALM-EQPT::ALL::,PAINTGRT;

and

RTRV-PATH-STS1::ALL::PAINTGRT;

— For *Message Set 2*:

RTRV-ALM-EQPT::ALL:::,PAINTGRT;

and

RTRV-PATH-STS1::ALL::PAINTGRT;

c. Since the original DS3SW circuit pack is not at fault, it can be put in the spares storage cabinet for future use.

d. Wearing an ESD wrist strap, reattach the backplane covers.

You have successfully corrected the problem. If more alarms exist on the frame, return to Procedure 9-1, "How to Clear Alarms," to determine the next corrective action to take.

Procedure 12-5. STS1IN:MN,PAINTGRT and DS3SW:MN,PAINTGRT Alarms with No Other Circuit Packs Showing PAINTGRT

Please note that there are four sections within Procedure 12-5; each section represents one possible source of the PAINTGRT condition:

- Checking the DS3SW Circuit Pack
- Checking the STS1OUT Circuit Pack
- Checking the Cables (Input side)
- Checking the Cables (Output side)

Sometimes you will use the steps in all sections to clear the PAINTGRT condition; other times only some of the sections will be needed. *However, regardless of the number of sections you use, the steps must be executed in the order presented.*

CAUTION:
Electrostatic discharge (ESD) damage.
ESD can cause damage to the components of a DACS III-2000 system.
Wear an ESD wrist strap when working around the frame.

Checking the DS3SW Circuit Pack

1. Have the system output from Procedure 12-1, in which you identified the affected STS1IN and DS3SW circuit packs, available for referencing.

WARNING:
Potential for service disruption.
Only one STS1IN and DS3SW circuit pack, and no other types of circuit packs, should have an active PAINTGRT condition.
If more than these two packs show PAINTGRT, do NOT execute this procedure. Return to Flowchart 12-1, "PAINTGRT Decision Tree," check the "Additional Conditions" column, and select the appropriate procedure.

2. Obtain a spare DS3SW (AWL1 or AYJ1) circuit pack.
   - If a spare circuit pack is not available, stop here and call your system administrator or the next level of technical support.
   - If a spare circuit pack is available, continue this procedure at Step 3.
3. At the craft interface terminal, verify that the DS3SW circuit pack is in the out-of-service fault (OOS-MTCE) state by entering:

```
RTRV-STATE-EQPT::ELOC::ALL;
```

where

ELOC = the DS3SW circuit pack identified in Step 1, specified as DS3SW-{1 through 4}-{1 through 16}

The system should respond with one of the following messages:

— For *Message Set 1*:

```
  <TID #n YY-MM-DD HH:MM:SS>
M  RTRV STATE EQPT::<ELOC>::ALL COMPLD
   /* LOC:STATE */
   " DS3SW-<unit-slot>:OOS-FLT "
;
```

— For *Message Set 2*:

```
  <TID YY-MM-DD HH:MM:SS>
M  RTRV STATE EQPT::<ELOC>::ALL COMPLD
   " DS3SW-<unit-slot>:OOS-FLT "
;
```

- If the system shows the DS3SW circuit pack is out-of-service fault (OOS-FLT), continue this procedure at Step 4.
- If the system responds with any other state, stop here and call your system administrator or the next level of technical support.

4. At the craft interface terminal, verify that the protection circuit pack, related to the DS3SW circuit pack identified in Step 1, is in the active (ACT) state by entering:

RTRV-STATE-EQPT::ELOC::ALL;

where

ELOC = the protection packs; identified as DS3SW-1-16 for a 1024-size system; DS3SW-4-15&-16 for a 2048-size system

The system should respond with one of the following messages:

— For *Message Set 1*:

```
  <TID #n YY-MM-DD HH:MM:SS>
M RTRV STATE EQPT::<ELOC>::ALL COMPLD
   /* LOC:STATE */
   " DS3SW-<unit-slot>:ACT"
;
```

— For *Message Set 2*:

```
  <TID YY-MM-DD HH:MM:SS>
M  RTRV STATE EQPT::<ELOC>::ALL COMPLD
   " DS3SW-<unit-slot>:ACT"
;
```

- If the system shows the protection circuit pack is active (ACT), continue this procedure at Step 5.
- If the system responds with any other state, stop here and call your system administrator or the next level of technical support.

5. Go to the DACS III-2000 frame and remove the DS3SW circuit pack that was identified in Step 1.
   - If you are working on a 1024-size frame and need detailed instructions, see Procedure 3-2, "Removing Circuit Packs."
   - If you are working on a 2048-size frame and need detailed instructions, see Procedure 3-4, "Removing DS3SWL CTR Circuit Packs."
6. Using standard office procedures, write down the
   — serial number of the removed DS3SW circuit pack
   — slot from which it was removed.

   Set aside the removed DS3SW circuit pack until the procedure instructs you to do something with it.
7. Insert the spare DS3SW circuit pack into the empty slot.
   - If you are working on a 1024-size frame and need detailed instructions, see Procedure 3-1, "Installing Circuit Packs."
   - If you are working on a 2048-size frame and need detailed instructions, see Procedure 3-3, "Installing DS3SWL CTR Circuit Packs."
8. At the craft interface terminal, check to see if the previous steps have cleared the problem by entering:

   TEST-PATH-STS1::::PAINTGRT;

   The system responds with one of the following messages:

   — For *Message Set 1*:

```
  <TID #n YY-MM-DD HH:MM:SS>
M  TEST PATH STS1::::PAINTGRT COMPLD
   /* STS1_IN,STS1_OUT:LOC,CHAN_OUT:LOC,CHAN_IN,
         CHAN_OUT:LOC,CHAN_IN:TAG:RESULT */
   " <STS1_IN,STS1_OUT:LOC,CHAN_OUT:LOC,CHAN_IN,
         CHAN_OUT:LOC,CHAN_IN:TAG:RESULT> "
;
```

— For *Message Set 2*:

```
  <TID YY-MM-DD HH:MM:SS>
M  TEST PATH STS1::::PAINTGRT COMPLD
   " <STS1_IN,STS1_OUT:LOC,CHAN_OUT:LOC,CHAN_IN,
         CHAN_OUT:LOC,CHAN_IN:TAG:RESULT> "
;
```

where

LOC = the DS3SW circuit pack location identified in Step 1, specified as DS3SW-{1 through 4}-{1 through 16}

RESULT= the test results; NULL means that the test could not be run at the time it was requested, PASS means the specified path is fault-free, FAIL means the associated path is failed

NOTE:
More than one path may be tested, which would result in more than one RESULT being reported in the message. However, each path will contain the DS3SW circuit pack identified in Step 1.

- If the system responds with NULL, continue this procedure at Step 9.
- If the system responds with PASS, continue this procedure at Step 10.
- If the system responds with FAIL, continue this procedure at Step 11.

9. Having received a NULL response, check to see that *all* the statements that follow are true:

   a. The input and output unit controllers, associated with the STS1IN circuit pack identified in Step 1, are in the in-service (IS) state.

   b. The protection switch circuit packs within the input unit, associated with the STS1IN circuit pack identified in Step 1, are in the in-service (IS) state.

   c. The circuit packs along the failed path, associated with the STS1IN circuit pack identified in Step 1, are present and provisioned and have no active failure conditions other than the PAINTGRT condition.

   d. The input port, associated with the STS1IN circuit pack identified in Step 1, has a valid incoming STS-1 signal present.

   Do one of the following:

- If this is the first time you received the NULL response and all of the previous statements are *true*, you have a problem that needs to be reported to your system administrator or next level of technical support.
- If this is the first time you received the NULL response and any or all of the previous statements are *false*, correct the situation(s) and repeat Step 8 from the beginning.
- If this is the second time you have executed Step 8 and received the NULL response, stop here and call your system administrator or the next level of technical support.

10. Having received the PASS response, perform the following steps:

    a. Check the craft interface terminal for the two autonomous messages that follow:

    — First message for *Message Set 1*:

```
  <TID #n YY-MM-DD HH:MM:SS>
A <ASEQ> REPT SW EQPT
   /* WORKING ENTITY,SWITCH DIRECTION */
   " <WORKING ENTITY>,WKG "
;
```

    — First message for *Message Set 2*:

```
  <TID YY-MM-DD HH:MM:SS>
A <ASEQ> REPT SW EQPT
   " <WORKING ENTITY>,WKG "
;
```

    where

    WORKING ENTITY= the STS1IN circuit pack identified in Step 1

    — Second message for *Message Set 1*:

```
  <TID #n YY-MM-DD HH:MM:SS>
A <ASEQ> REPT SW EQPT
   /* WORKING ENTITY,SWITCH DIRECTION */
   " <WORKING ENTITY>,WKG "
;
```

    — Second message for *Message Set 2*:

```
  <TID YY-MM-DD HH:MM:SS>
A <ASEQ> REPT SW EQPT
   " <WORKING ENTITY>,WKG "
;
```

    where

    WORKING ENTITY= the DS3SW circuit pack identified in Step 1

b. Verify that the STS1IN and DS3SW circuit packs identified in Step 1 no longer generate alarms by entering the two commands that follow:

RTRV-ALM-EQPT::ALL::,PAINTGRT;

and

RTRV-PATH-STS1::ALL::PAINTGRT;

In both system responses, the STS1IN and DS3SW circuit packs identified in Step 1 should *not* appear in the message and the red LEDs should no longer be lighted.

c. Using standard office procedures, label and record the DS3SW circuit pack, set aside in Step 6, as failed and in need of repair. If you need instructions for returning a failed circuit pack, see Procedure 3-11, "Returning Circuit Packs for Repair."

d. You have successfully corrected the problem. If more alarms exist on the frame, return to Procedure 9-1, "How to Clear Alarms," to determine the next corrective action to take.

Checking the STS1OUT Circuit Pack

11. Having received the FAIL response, obtain a spare STS1OUT (ARW12) circuit pack.

    - If a spare circuit pack is not available, stop here and call your system administrator or the next level of technical support.
    - If a spare circuit pack is available, continue this procedure at Step 12.

12. At the craft interface terminal, determine the STS1OUT circuit pack that may be at fault by entering:

RTRV-PATH-STS1::ALL::PAINTGRT;

The system responds with one of the following messages:

— For *Message Set 1*:

```
  <TID #n YY-MM-DD HH:MM:SS>
M  RTRV PATH STS1::ALL::PAINTGRT COMPLD
   /* STS1_IN,STS1_OUT:LOC,CHAN_OUT:LOC,CHAN_IN,
       CHAN_OUT:LOC,CHAN_IN */
   "<STS1_IN,STS1_OUT:LOC,CHAN_OUT:LOC,CHAN_IN,
       CHAN_OUT:LOC,CHAN_IN>"
  ;
```

— For *Message Set 2*:

```
  <TID #n YY-MM-DD HH:MM:SS>
M  RTRV PATH STS1::ALL::PAINTGRT COMPLD
   /* STS1_IN,STS1_OUT:LOC,CHAN_OUT:LOC,CHAN_IN,
      CHAN_OUT:LOC,CHAN_IN */
```

The response to the command will contain two failed paths. In each failed path, the STS1OUT circuit pack will be the same. Make a note of this STS1OUT circuit pack.

13. Switch the STS1OUT circuit pack to protection by entering:

SW-TOPROTN-EQPT::ELOC;

where

ELOC = the STS1OUT circuit pack identified in Step 12, specified as STS1OUT-{1 through 8}-{1 through 30}

14. At the craft interface terminal, verify that the STS1OUT circuit pack is in the out-of-service maintenance (OOS-MTCE) state by entering:

RTRV-STATE-EQPT::ELOC::ALL;

where

ELOC = the STS1OUT circuit pack identified in Step 12, specified as STS1OUT-{1 through 8}-{1 through 30}

The system should respond with one of the following messages:

— For *Message Set 1*:

```
  <TID #n YY-MM-DD HH:MM:SS>
M  RTRV STATE EQPT::<ELOC>::ALL COMPLD
   /* LOC:STATE */
   " STS1OUT-<unit-slot>:OOS-MTCE "
;
```

— For *Message Set 2*:

```
  <TID YY-MM-DD HH:MM:SS>
M  RTRV STATE EQPT::<ELOC>::ALL COMPLD
   " STS1OUT-<unit-slot>:OOS-MTCE "
;
```

- If the system shows the STS1OUT circuit pack is out-of-service maintenance (OOS-MTCE), continue this procedure at Step 15.
- If the system responds with any other state, stop here and call your system administrator or the next level of technical support.

15. Go to the DACS III-2000 frame and remove the STS1OUT circuit pack that was identified in Step 12. If you need detailed instructions, see Procedure 3-2, "Removing Circuit Packs."

16. Using standard office procedures, write down the

    — serial number of the removed STS1OUT circuit pack

    — unit and slot from which it was removed.

    Set aside the removed STS1OUT circuit pack until the procedure instructs you to do something with it.

17. On the spare STS1OUT circuit pack, set the LBO to match those of the extracted STS1OUT circuit pack. If you need detailed instructions, see Procedure 3-6, "Setting Line Buildout (LBO)."

18. Insert the spare STS1OUT circuit pack into the empty slot. If you need detailed instructions, see Procedure 3-1, "Installing Circuit Packs."

19. At the craft interface terminal, check to see if the previous steps have cleared the problem by entering:

    TEST-PATH-STS1::::PAINTGRT;

    The system responds with one of the following messages:

    — For *Message Set 1*:

    ```
      <TID #n YY-MM-DD HH:MM:SS>
    M  TEST PATH STS1::::PAINTGRT COMPLD
       /* STS1_IN,STS1_OUT:LOC,CHAN_OUT:LOC,CHAN_IN,
             CHAN_OUT:LOC,CHAN_IN:TAG:RESULT */
       " <STS1_IN,STS1_OUT:LOC,CHAN_OUT:LOC,CHAN_IN,
             CHAN_OUT:LOC,CHAN_IN:TAG:RESULT> "
    ;
    ```

    — For *Message Set 2*:

    ```
      <TID YY-MM-DD HH:MM:SS>
    M  TEST PATH STS1::::PAINTGRT COMPLD
       " <STS1_IN,STS1_OUT:LOC,CHAN_OUT:LOC,CHAN_IN,
    CHAN_OUT:LOC,CHAN_IN:TAG:RESULT> "
    ;
    ```

    where

    LOC = the STS1OUT circuit pack location, identified in Step 12

    RESULT= the test results; NULL means that the test could not be run at the time it was requested, PASS means the specified path is fault-free, FAIL means the associated path is failed

    More than one path may be tested, which would result in more than one RESULT being reported in the message. However, each path will contain the STS1OUT circuit pack identified in Step 12.

Do one of the following:

- If the system responds with NULL, continue this procedure at Step 20.
- If the system responds with PASS, continue this procedure at Step 21.
- If the system responds with FAIL, continue this procedure at Step 22.

20. Having received a NULL response, check to see that *all* the statements that follow are true:

    a. The input and output unit controllers, associated with the STS1OUT circuit pack identified in Step 12, are in the in-service (IS) state.

    b. The protection switch circuit packs within the input unit, associated with the STS1OUT circuit pack identified in Step 12, are in the in-service (IS) state.

    c. The circuit packs along the failed path, associated with the STS1OUT circuit pack identified in Step 12, are present and provisioned and have no active failure conditions other than the PAINT-GRT condition.

    Do one of the following:

    - If this is the first time you received the NULL response and all of the previous statements are *true*, you have a problem that needs to be reported to your system administrator or next level of technical support.
    - If this is the first time you received the NULL response and any or all of the previous statements are *false*, correct the situation(s) and repeat Step 19 from the beginning.
    - If this is the second time you have executed Step 19 and received the NULL response, stop here and call your system administrator or the next level of technical support.

21. Having received the PASS response, perform the following steps:

    a. Check the craft interface terminal for the two autonomous messages that follow:

    — First message for *Message Set 1*:

```
  <TID #n YY-MM-DD HH:MM:SS>
A <ASEQ> REPT SW EQPT
   /* WORKING ENTITY,SWITCH DIRECTION */
  " <WORKING ENTITY>,WKG "
;
```

— First message for *Message Set 2*:

```
  <TID YY-MM-DD HH:MM:SS>
A <ASEQ> REPT SW EQPT
   " <WORKING ENTITY>,WKG "
;
```

where:

WORKING ENTITY = the STS1IN circuit pack identified in Step 1

— Second message for *Message Set 1*:

```
  <TID #n YY-MM-DD HH:MM:SS>
A <ASEQ> REPT SW EQPT
   /* WORKING ENTITY,SWITCH DIRECTION */
  " <WORKING ENTITY>,WKG "
;
```

— Second message for *Message Set 2*:

```
  <TID YY-MM-DD HH:MM:SS>
A <ASEQ> REPT SW EQPT
   " <WORKING ENTITY>,WKG "
;
```

where:

WORKING ENTITY = the DS3SW circuit pack identified in Step 1

b. Verify that the STS1IN and DS3SW circuit packs identified in Step1 no longer generate alarms, by entering the two commands that follow:

RTRV-ALM-EQPT::ALL::,PAINTGRT;

and

RTRV-PATH-STS1::ALL::PAINTGRT;

In both system responses, the STS1IN and DS3SW circuit packs identified in Step 1 should *not* appear in the message and the red LEDs should no longer be lighted. .

c. At the craft interface terminal, switch the STS1OUT to a working state by entering:

ALW-SW-EQPT::ELOC::WKG;

where

ELOC = the STS1OUT circuit pack location identified in Step 12, specified by STS1OUT-{1 through 8}-{1 through 30}

d. Verify a successful switch to working of the STS1OUT circuit pack identified in Step 12 by entering:

RTRV-STATE-EQPT::ELOC;

where

ELOC = the STS1OUT circuit pack

The system output should be one of the following messages:

— For *Message Set 1*:

```
  <TID #n YY-MM-DD HH:MM:SS>
M  RTRV STATE EQPT::<ELOC>::ALL COMPLD
   /* LOC:STATE */
   " <LOC>,ACT "
;
```

— For *Message Set 2*:

```
  <TID YY-MM-DD HH:MM:SS>
M  RTRV STATE EQPT::<ELOC>::ALL COMPLD
   " <LOC>,ACT "
;
```

where

LOC = the STS1OUT circuit pack identified in Step 12

- If the system shows the STS1OUT circuit pack identified in Step 12 is active (ACT), continue this procedure at Step 21e.
- If the system responds with any other state, stop here and call your system administrator or the next level of technical support.

e. Using standard office procedures, label and record the STS1OUT circuit pack, set aside in Step 16, as failed and in need of repair. If you need instructions for returning a failed circuit pack, see Procedure 3-11, "Returning Circuit Packs for Repair."

f. Since the original DS3SW circuit pack is not at fault, it can be put in the spares storage cabinet for future use.

g. You have successfully corrected this problem. If more alarms exist on the frame, return to Procedure 9-1, "How to Clear Alarms," to determine the next corrective action to take.

Checking the Cables (Input Side)

22. At the craft interface terminal, switch the STS1OUT to a working state by entering:

ALW-SW-EQPT::ELOC::WKG;

where

ELOC = the STS1OUT circuit pack location identified in Step 12, specified by STS1OUT-{1 through 8}-{1 through 30}

23. Verify a successful switch to working of the STS1OUT circuit pack identified in Step 12 by entering:

RTRV-STATE-EQPT::ELOC;

where

ELOC = the STS1OUT circuit pack. The system output should be one of the following messages:

— For *Message Set 1*:

```
  <TID #n YY-MM-DD HH:MM:SS>
M RTRV STATE EQPT::<ELOC>::ALL COMPLD
   /* LOC:STATE */
   " <LOC>,ACT "
;
```

— For *Message Set 2*:

```
  <TID YY-MM-DD HH:MM:SS>
M TRV STATE EQPT::<ELOC>::ALL COMPLD
   " <LOC>,ACT "
;
```

where

LOC = the STS1OUT circuit pack identified in Step 12

- If the system shows the STS1OUT circuit pack identified in Step 12 is active (ACT), continue this procedure at Step 24.
- If the system responds with any other state, stop here and call your system administrator or the next level of technical support.

24. Identify the failed input cable by entering:

RTRV-CABLE-STS1::ALL::PAINTGRT;

The system responds with one of the following messages:

— For *Message Set 1*:

```
  <TID #n YY-MM-DD HH:MM:SS>
M   RTRV CABLE STS1:::PAINTGRT COMPLD
    /* STS1IN,CABLE,PIN #:DS3SW_IN,CABLE,PIN #:
        DS3SW_OUT,CABLE,PIN #:STS1OUT,CABLE,
         PIN # */
    " <STS1IN,CABLE,PIN #:DS3SW_IN,CABLE,PIN #:
        DS3SW_OUT,CABLE,PIN #:STS1OUT,CABLE,
         PIN #> "
;
```

— For *Message Set 2*:

```
  <TID YY-MM-DD HH:MM:SS>
M  RTRV CABLE STS1::::PAINTGRT COMPLD
   " <STS1IN,CABLE,PIN #:DS3SW_IN,CABLE,PIN #:
        DS3SW_OUT,CABLE,PIN #:STS1OUT,CABLE,
         PIN #> "
;
```

Be certain to note the cable that is associated with the STS1IN circuit pack identified in Step 1. The numbers in the CABLE field, those starting with J, correlate to the numbers on the octopus cable connectors attached to the backplane. The suspected cable segment will be that segment between the STS1 input interface (STS1IN INTFC) module and the DS3 switch (DS3SW) module.

25. Make sure you have written down the failed cable's location for future use.
26. Wearing an ESD wrist strap, remove the backplane covers. Using the cable identification from Step 25, visually examine, at both ends, the cable that runs between the STS1IN module and the DS3SW module.
27. Visually verify that the cable is correctly plugged in and that there are no offset, misaligned, or cocked connectors.
    - If you observe any of the above problems, continue this procedure at Step 28.
    - If you do *not* observe any problems with the cable, continue this procedure at Step 32.
28. Rectify the problem observed with the cable identified in Step 25.
29. At the craft interface terminal, check to see if the previous steps have cleared the problem by entering:

    TEST-PATH-STS1::::PAINTGRT;

    The system responds with one of the following messages:

    — For *Message Set 1*:

```
  <TID #n YY-MM-DD HH:MM:SS>
M  TEST PATH STS1:::PAINTGRT COMPLD
   /* STS1_IN,STS1_OUT:LOC,CHAN_OUT:LOC,CHAN_IN,
          CHAN_OUT:LOC,CHAN_IN:TAG:RESULT */
   " <STS1_IN,STS1_OUT:LOC,CHAN_OUT:LOC,CHAN_IN,
          CHAN_OUT:LOC,CHAN_IN:TAG:RESULT> "
;
```

— For *Message Set 2*:

```
  <TID YY-MM-DD HH:MM:SS>
M  TEST PATH STS1:::PAINTGRT COMPLD
   " <STS1_IN,STS1_OUT:LOC,CHAN_OUT:LOC,CHAN_IN,
          CHAN_OUT:LOC,CHAN_IN:TAG:RESULT> "
;
```

where

LOC = the DS3SW circuit pack location

RESULT = the test results; NULL means that the test could not be run at the time it was requested, PASS means the specified path is fault-free, FAIL means the associated path is failed

- If the system responds with NULL, continue this procedure at Step 30.
- If the system responds with PASS, continue this procedure at Step 31.
- If the system responds with FAIL, continue this procedure at Step 32.

30. Having received a NULL response, check to see that *all* the statements that follow are true:

    a. The input and output unit controllers, associated with the STS1IN circuit pack identified in Step 1, are in the in-service (IS) state.

    b. The protection switch circuit packs within the input unit, associated with the STS1IN circuit pack identified in Step 1, are in the in-service (IS) state.

    c. The circuit packs along the failed path, associated with the STS1IN circuit pack identified in Step 1, are present and provisioned and have no active failure conditions other than the PAINTGRT condition.

    d. The input port, associated with the STS1IN circuit pack identified in Step 1, has a valid incoming STS-1 signal present.

    Do one of the following:

    - If this is the first time you received the NULL response and all of the previous statements are *true*, you have a problem that needs to be reported to your system administrator or next level of technical support.
    - If this is the first time you received the NULL response and any or all of the previous statements are *false*, correct the situation(s) and repeat Step 29 from the beginning.

- If this is the second time you have executed Step 29 and received the NULL response, stop here and call your system administrator or the next level of technical support.

31. Having received the PASS response, perform the following steps:

    a. Check the craft interface terminal for the two autonomous messages that follow:

    — First message for *Message Set 1*:

```
  <TID #n YY-MM-DD HH:MM:SS>
A <ASEQ> REPT SW EQPT
    /* WORKING ENTITY,SWITCH DIRECTION */
    " <WORKING ENTITY>,WKG "
;
```

    — First message for *Message Set 2*:

```
  <TID YY-MM-DD HH:MM:SS>
A <ASEQ> REPT SW EQPT
    " <WORKING ENTITY>,WKG "
;
```

    where

    WORKING ENTITY= the STS1IN circuit pack identified in Step 1

    — Second message for *Message Set 1*:

```
  <TID #n YY-MM-DD HH:MM:SS>
A <ASEQ> REPT SW EQPT
    /* WORKING ENTITY,SWITCH DIRECTION */
    " <WORKING ENTITY>,WKG "
;
```

    — Second message for *Message Set 2*:

```
  <TID YY-MM-DD HH:MM:SS>
A <ASEQ> REPT SW EQPT
    " <WORKING ENTITY>,WKG "
;
```

    where

    WORKING ENTITY=the DS3SW circuit pack identified in Step 1

    b. Verify that the STS1IN and DS3SW circuit packs identified in Step 1 no longer generate alarms by entering the two commands that follow:

    RTRV-ALM-EQPT::ALL::,PAINTGRT;

    and

    RTRV-PATH-STS1::ALL::PAINTGRT;

In both system responses, the STS1IN and DS3SW circuit packs identified in Step 1 should *not* appear in the message and the red LEDs should no longer be lighted.

c. Since the original DS3SW and STS1OUT circuit packs are not at fault, they can be put in the spares storage cabinet for future use.

d. Wearing an ESD wrist strap, reattach the backplane covers.

e. You have successfully corrected the problem. If more alarms exist on the frame, return to Procedure 9-1, "How to Clear Alarms," to determine the next corrective action to take.

Checking the Cables (Output Side)

32. Having arrived at this step because you did not observe cable problems in Step 27 or because you received the FAIL response in Step 29, identify the failed output cable by entering:

RTRV-CABLE-STS1::ALL::PAINTGRT;

The system responds with one of the following messages:

— For *Message Set 1*:

```
  <TID #n YY-MM-DD HH:MM:SS>
M  RTRV CABLE STS1::::PAINTGRT COMPLD
  /* STS1IN,CABLE,PIN #:DS3SW_IN,CABLE,PIN #:
     DS3SW_OUT,CABLE,PIN #:STS1OUT,CABLE,PIN # */
  " <STS1IN,CABLE,PIN #:DS3SW_IN,CABLE,PIN #:
     DS3SW_OUT,CABLE,PIN #:STS1OUT,CABLE,PIN #> "
;
```

— For *Message Set 2*:

```
  <TID YY-MM-DD HH:MM:SS>
M  RTRV CABLE STS1::::PAINTGRT COMPLD
   " <STS1IN,CABLE,PIN #:DS3SW_IN,CABLE,PIN #:
     DS3SW_OUT,CABLE,PIN #:STS1OUT,CABLE,PIN #> "
;
```

Be certain to note the cable that is associated with the STS1OUT circuit pack identified in Step 12. The numbers in the *CABLE* field, those starting with *J*, correlate to the numbers on the octopus cable connectors attached to the backplane. The suspected cable segment will be that segment between the DS3 switch (DS3SW) module and the STS1 output interface (STS1OUT INTFC) module.

33. Make sure you have written down the failed cable's location for future use.

34. Wearing an ESD wrist strap, remove the backplane covers. Using the cable identification from Step 33, visually examine, at both ends, the cable that runs between the DS3SW module and the STS1OUT module.

35. Visually verify that the cable is correctly plugged in and that there are no offset, misaligned, or cocked connectors.
    - If you observe any of the above problems, continue this procedure at Step 36.
    - If you do *not* observe any problems with the cable, continue this procedure at Step 40.
36. Rectify the problem observed with the cable identified in Step 33.
37. At the craft interface terminal, check to see if the previous steps have cleared the problem by entering:

    TEST-PATH-STS1::::PAINTGRT;

    The system responds with one of the following messages:

    — For *Message Set 1*:

```
  <TID #n YY-MM-DD HH:MM:SS>
M  TEST PATH STS1:::PAINTGRT COMPLD
   /* STS1_IN,STS1_OUT:LOC,CHAN_OUT:LOC,CHAN_IN,
         CHAN_OUT:LOC,CHAN_IN:TAG:RESULT */
   " <STS1_IN,STS1_OUT:LOC,CHAN_OUT:LOC,CHAN_IN,
         CHAN_OUT:LOC,CHAN_IN:TAG:RESULT> "
;
```

    — For *Message Set 2*:

```
  <TID YY-MM-DD HH:MM:SS>
M  TEST PATH STS1:::PAINTGRT COMPLD
   " <STS1_IN,STS1_OUT:LOC,CHAN_OUT:LOC,CHAN_IN,
         CHAN_OUT:LOC,CHAN_IN:TAG:RESULT> "
;
```

    where

    LOC = the DS3SW circuit pack location

    RESULT= the test results; NULL means that the test could not be run at the time it was requested, PASS means the specified path is fault-free, FAIL means the associated path is failed

    Do one of the following:

    - If the system responds with NULL, continue this procedure at Step 38.
    - If the system responds with PASS, continue this procedure at Step 39.
    - If the system responds with FAIL, continue this procedure at Step 40.
38. Having received a NULL response, check to see that *all* the statements that follow are true:

a. The input and output unit controllers, associated with the STS1OUT circuit pack identified in Step 12, are in the in-service (IS) state.

b. The protection switch circuit packs within the input unit, associated with the STS1OUT circuit pack identified in Step 12, are in the in-service (IS) state.

c. The circuit packs along the failed path, associated with the STS1OUT circuit pack identified in Step 12, are present and provisioned and have no active failure conditions other than the PAINTGRT condition.

Do one of the following:

- If this is the first time you received the NULL response and all of the previous statements are *true*, you have a problem that needs to be reported to your system administrator or next level of technical support.
- If this is the first time you received the NULL response and any or all of the previous statements are *false*, correct the situation(s) and repeat Step 37 from the beginning.
- If this is the second time you have executed Step 37 and received the NULL response, stop here and call your system administrator or the next level of technical support.

39. Having received the PASS response, perform the following steps:

a. Check the craft interface terminal for the two autonomous messages that follow:

— First message for *Message Set 1*:

```
  <TID #n YY-MM-DD HH:MM:SS>
A <ASEQ> REPT SW EQPT
    /* WORKING ENTITY,SWITCH DIRECTION */
    " <WORKING ENTITY>,WKG "
;
```

— First message for *Message Set 2*:

```
  <TID YY-MM-DD HH:MM:SS>
A <ASEQ> REPT SW EQPT
    " <WORKING ENTITY>,WKG "
;
```

where

WORKING ENTITY = the STS1IN circuit pack identified in Step 1

— Second message for *Message Set 1*:

```
  <TID #n YY-MM-DD HH:MM:SS>
A <ASEQ> REPT SW EQPT
    /* WORKING ENTITY,SWITCH DIRECTION */
    " <WORKING ENTITY>,WKG "
;
```

— Second message for *Message Set 2*:

```
  <TID YY-MM-DD HH:MM:SS>
A <ASEQ> REPT SW EQPT
  " <WORKING ENTITY>,WKG "
;
```

where

`WORKING ENTITY`= the DS3SW circuit pack identified in Step 1

b. Verify that the STS1IN and DS3SW circuit packs identified in Step 1 no longer generate alarms by entering the two commands that follow:

`RTRV-ALM-EQPT::ALL::,PAINTGRT;`

and

`RTRV-PATH-STS1::ALL::PAINTGRT;`

In both system responses, the STS1IN and DS3SW circuit packs identified in Step 1 should *not* appear in the message and the red LEDs should no longer be lighted.

c. Since the original DS3SW and STS1OUT circuit packs are not at fault, they can be put in the spares storage cabinet for future use.

d. Wearing an ESD wrist strap, reattach the backplane covers.

e. You have successfully corrected the problem. If more alarms exist on the frame, return to Procedure 9-1, "How to Clear Alarms," to determine the next corrective action to take.

40. Having arrived at this step because you did *not* observe cable problems in Step 35 or because you received the `FAIL` response in Step 37, call your system administrator or the next level of technical support to fix the cable. Note the number of this procedure and the number of the next step so that you can return to the correct location once the failed cable is repaired.

41. After the failed cable has been repaired by your system administrator or the next level of technical support, continue this procedure at Step 42.

42. At the craft interface terminal, verify that the problem has been corrected by entering:

`TEST-PATH-STS1::::PAINTGRT;`

The system responds with one of the following messages:

— For *Message Set 1*:

```
  <TID #n YY-MM-DD HH:MM:SS>
M  TEST PATH STS1::::PAINTGRT COMPLD
   /* STS1_IN,STS1_OUT:LOC,CHAN_OUT:LOC,CHAN_IN,
         CHAN_OUT:LOC,CHAN_IN:TAG:RESULT */
   " <STS1_IN,STS1_OUT:LOC,CHAN_OUT:LOC,CHAN_IN,
    CHAN_OUT:LOC,CHAN_IN:TAG:>PASS "
;
```

— For *Message Set 2*:

```
  <TID YY-MM-DD HH:MM:SS>
M  TEST PATH STS1::::PAINTGRT COMPLD
   " <STS1_IN,STS1_OUT:LOC,CHAN_OUT:LOC,CHAN_IN,
         CHAN_OUT:LOC,CHAN_IN:TAG:>PASS "
;
```

43. Verify that the system output is PASS. Having received the PASS response, perform the following steps:

    a. Check the craft interface terminal for the two autonomous messages that follow:

    — First message for *Message Set 1*:

```
  <TID #n YY-MM-DD HH:MM:SS>
A <ASEQ> REPT SW EQPT
    /* WORKING ENTITY,SWITCH DIRECTION */
    " <WORKING ENTITY>,WKG "
;
```

    — First message for *Message Set 2*:

```
  <TID YY-MM-DD HH:MM:SS>
A <ASEQ> REPT SW EQPT
    " <WORKING ENTITY>,WKG "
;
```

    where

    WORKING ENTITY = the STS1IN circuit pack identified in Step 1

    — Second message for *Message Set 1*:

```
  <TID #n YY-MM-DD HH:MM:SS>
A <ASEQ> REPT SW EQPT
    /* WORKING ENTITY,SWITCH DIRECTION */
    " <WORKING ENTITY>,WKG "
;
```

— Second message for *Message Set 2*:

```
  <TID YY-MM-DD HH:MM:SS>
A <ASEQ> REPT SW EQPT
   " <WORKING ENTITY>,WKG "
;
```

where

`WORKING ENTITY` = the DS3SW circuit pack identified in Step 1

b. Verify that the STS1IN and DS3SW circuit packs identified in Step 1 no longer generate alarms by entering the two commands that follow:

`RTRV-ALM-EQPT::ALL::,PAINTGRT;`

and

`RTRV-PATH-STS1::ALL::PAINTGRT;`

In both system responses, the STS1IN and DS3SW circuit packs identified in Step 1 should *not* appear in the message and the red LEDs should no longer be lighted.

c. Since the original DS3SW and STS1OUT circuit packs are not at fault, they can be put in the spares storage cabinet for future use.

d. Wearing an ESD wrist strap, reattach the backplane covers.

e. You have successfully corrected the problem. If more alarms exist on the frame, return to Procedure 9-1, "How to Clear Alarms," to determine the next corrective action to take.

Procedure 12-6. STS1OUT:MN,PAINTGRT and DS3SW:MN,PAINTGRT Alarms with No Other Circuit Packs Showing PAINTGRT

Please note that there are four sections within Procedure 12-6; each section represents one possible source of the PAINTGRT condition:

- Checking the DS3SW Circuit Pack
- Checking the STS1IN Circuit Pack
- Checking the Cables (Input Side)
- Checking the Cables (Output Side)

Sometimes you will use the steps in all sections to clear the PAINTGRT condition; other times only some of the sections will be needed. *However, regardless of the number of sections you use, the steps must be executed in the order presented.*

CAUTION:
Electrostatic discharge (ESD) damage.
ESD can cause damage to the components of a DACS III-2000 system.
Wear an ESD wrist strap when working around the frame.

Checking the DS3SW Circuit Pack

1. Have the system output from Procedure 12-1, in which you identified the affected STS1OUT and DS3SW circuit packs, available for referencing.

WARNING:
Potential for service disruption.
Only one STS1OUT and DS3SW circuit pack, and no other types of circuit packs, should have an active PAINTGRT condition.
If more than these two packs show PAINTGRT, do NOT execute this procedure. Return to Flowchart 12-1, "PAINTGRT Decision Tree," check the "Additional Conditions" column, and select the appropriate procedure.

2. Obtain a spare DS3SW (AWL1 or AYJ1) circuit pack.
   - If a spare circuit pack is not available, stop here and call your system administrator or the next level of technical support.
   - If a spare circuit pack is available, continue this procedure at Step 3.
3. At the craft interface terminal, verify that the DS3SW circuit pack is in the out-of-service fault (`OOS-FLT`) state by entering:

   ```
   RTRV-STATE-EQPT::ELOC::ALL;
   ```

   where

ELOC = the DS3SW circuit pack identified in Step 1, specified as DS3SW-{1 through 4}-{1 through 16}

The system should respond with one of the following messages:

— For *Message Set 1*:

```
  <TID #n YY-MM-DD HH:MM:SS>
M  RTRV STATE EQPT::<ELOC>::ALL COMPLD
   /* LOC:STATE */
   " DS3SW-<unit-slot>:OOS-FLT "
;
```

— For *Message Set 2*:

```
  <TID YY-MM-DD HH:MM:SS>
M  RTRV STATE EQPT::<ELOC>::ALL COMPLD
   " DS3SW-<unit-slot>:OOS-FLT "
;
```

- If the system shows the DS3SW circuit pack is out-of-service fault (OOS-FLT), continue this procedure at Step 4.
- If the system responds with any other state, stop here and call your system administrator or the next level of technical support.

4. At the craft interface terminal, verify that the related protection circuit pack is in the active (ACT) state by entering:

RTRV-STATE-EQPT::ELOC::ALL;

where

ELOC = the protection pack; identified as DS3SW-1-16 for a 1024-size system; DS3SW-4-15&-16 for a 2048-size system

The system should respond with one of the following messages:

— For *Message Set 1*:

```
  <TID #n YY-MM-DD HH:MM:SS>
M RTRV STATE EQPT::<ELOC>::ALL COMPLD
   /* LOC:STATE */
   " DS3SW-<unit-slot>:ACT"
;
```

— For *Message Set 2*:

```
  <TID YY-MM-DD HH:MM:SS>
M  RTRV STATE EQPT::<ELOC>::ALL COMPLD
   " DS3SW-<unit-slot>:ACT"
;
```

- If the system shows the protection circuit pack is active (ACT), continue this procedure at Step 5

- If the system responds with any other state, stop here and call your system administrator or the next level of technical support.

5. Go to the DACS III-2000 frame and remove the DS3SW circuit pack that was identified in Step 1.
   - If you are working on a 1024-size frame and need detailed instructions, see Procedure 3-2, "Removing Circuit Packs."
   - If you are working on a 2048-size frame and need detailed instructions, see Procedure 3-4, "Removing DS3SWL CTR Circuit Packs."
6. Using standard office procedures, write down the
   — serial number of the removed DS3SW circuit pack
   — slot from which it was removed.

   Set aside the removed DS3SW circuit pack until the procedure instructs you to do something with it.
7. Insert the spare DS3SW circuit pack into the empty slot.
   - If you are working on a 1024-size frame and need detailed instructions, see Procedure 3-1, "Installing Circuit Packs."
   - If you are working on a 2048-size frame and need detailed instructions, see Procedure 3-3, "Installing DS3SWL CTR Circuit Packs."
8. At the craft interface terminal, check to see if the previous steps have cleared the problem by entering:

   TEST-PATH-STS1::::PAINTGRT;

   The system responds with one of the following messages:

   — For *Message Set 1*:

```
  <TID #n YY-MM-DD HH:MM:SS>
M  TEST PATH STS1::::PAINTGRT COMPLD
   /* STS1_IN,STS1_OUT:LOC,CHAN_OUT:LOC,CHAN_IN,
         CHAN_OUT:LOC,CHAN_IN:TAG:RESULT */
   " <STS1_IN,STS1_OUT:LOC,CHAN_OUT:LOC,CHAN_IN,
         CHAN_OUT:LOC,CHAN_IN:TAG:RESULT> "
;
```

— For *Message Set 2*:

```
  <TID YY-MM-DD HH:MM:SS>
M  TEST PATH STS1::::PAINTGRT COMPLD
   " <STS1_IN,STS1_OUT:LOC,CHAN_OUT:LOC,CHAN_IN,
        CHAN_OUT:LOC,CHAN_IN:TAG:RESULT> "
;
```

where

LOC = the DS3SW circuit pack location identified in Step 1, specified as DS3SW-{1 through 4}-{1 through 16}

RESULT= the test results; NULL means that the test could not be run at the time it was requested, PASS means the specified path is fault-free, FAIL means the associated path is failed

NOTE:
More than one path will be tested, which would result in more than one RESULT being reported in the message. However, each path will contain the STS1IN circuit pack identified in Step 12.

Do one of the following:

- If the system responds with NULL, continue this procedure at Step 9.
- If the system responds with PASS, continue this procedure at Step 10.
- If the system responds with FAIL, continue this procedure at Step 11.

9. Having received a NULL response, check to see that *all* the statements that follow are true:

   a. The input and output unit controllers, associated with the STS1OUT circuit pack identified in Step 1, are in the in-service (IS) state.

   b. The protection switch circuit packs within the input unit, associated with the STS1OUT circuit pack identified in Step 1, are in the in-service (IS) state.

   c. The circuit packs along the failed path, associated with the STS1OUT circuit pack identified in Step 1, are present and provisioned and have no active failure conditions other than the PAINTGRT condition.

Do one of the following:

- If this is the first time you received the NULL response and all of the previous statements are *true*, you have a problem that needs to be reported to your system administrator or next level of technical support.
- If this is the first time you received the NULL response and any or all of the previous statements are *false*, correct the situation(s) and repeat Step 8 from the beginning.
- If this is the second time you have executed Step 8 and received the NULL response, stop here and call your system administrator or the next level of technical support.

10. Having received the PASS response, perform the following steps:

    a. Check the craft interface terminal for the two autonomous messages that follow:

    — First message for *Message Set 1*:

```
  <TID #n YY-MM-DD HH:MM:SS>
A <ASEQ> REPT SW EQPT
   /* WORKING ENTITY,SWITCH DIRECTION */
   " <WORKING ENTITY>,WKG "
;
```

    — First message for *Message Set 2*:

```
  <TID YY-MM-DD HH:MM:SS>
A <ASEQ> REPT SW EQPT
   " <WORKING ENTITY>,WKG "
;
```

    where

    WORKING ENTITY = the STS1OUT circuit pack identified in Step 1

    — Second message for *Message Set 1*:

```
  <TID #n YY-MM-DD HH:MM:SS>
A <ASEQ> REPT SW EQPT
   /* WORKING ENTITY,SWITCH DIRECTION */
   " <WORKING ENTITY>,WKG "
;
```

    — Second message for *Message Set 2*:

```
  <TID YY-MM-DD HH:MM:SS>
A <ASEQ> REPT SW EQPT
   " <WORKING ENTITY>,WKG "
;
```

where

`WORKING ENTITY` = the DS3SW circuit pack identified in Step 1

b. Verify that the STS1OUT and DS3SW circuit packs identified in Step 1 no longer generate alarms by entering the two commands that follow:

```
RTRV-ALM-EQPT::ALL::,PAINTGRT;
```

and

```
RTRV-PATH-STS1::ALL::PAINTGRT;
```

In both system responses, the STS1OUT and DS3SW circuit packs identified in Step 1 should *not* appear in the message and the red LEDs should no longer be lighted.

c. Using standard office procedures, label and record the DS3SW circuit pack, set aside in Step 6, as failed and in need of repair. If you need instructions for returning a failed circuit pack, see Procedure 3-11, "Returning Circuit Packs for Repair."

d. You have successfully corrected the problem. If more alarms exist on the frame, return to Procedure 9-1, "How to Clear Alarms," to determine the next corrective action to take.

Checking the STS1IN Circuit Pack

11. Having received the FAIL response, obtain a spare STS1IN (ARW11) circuit pack.

    - If a spare circuit pack is not available, stop here and call your system administrator or the next level of technical support.
    - If a spare circuit pack is available, continue this procedure at Step 12.

12. At the craft interface terminal, determine the STS1IN circuit pack that may be at fault by entering:

```
RTRV-PATH-STS1::ALL::PAINTGRT;
```

The system responds with one of the following messages:

— For *Message Set 1*:

```
<TID #n YY-MM-DD HH:MM:SS>
M  RTRV PATH STS1::ALL::PAINTGRT COMPLD
   /* STS1_IN,STS1_OUT:LOC,CHAN_OUT:LOC,CHAN_IN,
      CHAN_OUT:LOC,CHAN_IN */
   "<STS1_IN,STS1_OUT:LOC,CHAN_OUT:LOC,CHAN_IN,
       CHAN_OUT:LOC,CHAN_IN>"
;
```

— For *Message Set 2*:

```
  <TID #n YY-MM-DD HH:MM:SS>
M  RTRV PATH STS1::ALL::PAINTGRT COMPLD
   /* STS1_IN,STS1_OUT:LOC,CHAN_OUT:LOC,CHAN_IN,
      CHAN_OUT:LOC,CHAN_IN */
```

The response to the command will contain two failed paths. In each failed path, the STS1IN circuit pack will be the same. Make a note of this STS1IN circuit pack.

13. Switch the STS1IN circuit pack to protection by entering:

SW-TOPROTN-EQPT::ELOC;

where

ELOC = the STS1IN circuit pack identified in Step 12, specified as STS1IN-{1 through 8}-{1 through 30}

14. At the craft interface terminal, verify that the STS1IN circuit pack is in the out-of-service maintenance (OOS-MTCE) state by entering:

RTRV-STATE-EQPT::ELOC::ALL;

where

ELOC = the STS1IN circuit pack identified in Step 12, specified as STS1IN-{1 through 8}-{1 through 30}

The system should respond with one of the following messages:

— For *Message Set 1*:

```
  <TID #n YY-MM-DD HH:MM:SS>
M  RTRV STATE EQPT::<ELOC>::ALL COMPLD
   /* LOC:STATE */
   " STS1IN-<unit-slot>:OOS-MTCE "
;
```

— For *Message Set 2*:

```
  <TID YY-MM-DD HH:MM:SS>
M  RTRVSTATE EQPT::<ELOC>::ALL COMPLD
   " STS1IN-<unit-slot>:OOS-MTCE "
;
```

- If the system shows the STS1IN circuit pack is out-of-service maintenance (OOS-MTCE), continue this procedure at Step 15.
- If the system responds with any other state, stop here and call your system administrator or the next level of technical support.

15. Go to the DACS III-2000 frame and remove the STS1IN circuit pack that was identified in Step 12. If you need detailed instructions, see Procedure 3-2, "Removing Circuit Packs."

16. Using standard office procedures, write down the
    - serial number of the removed STS1IN circuit pack
    - unit and slot from which it was removed.

    Set aside the removed STS1IN circuit pack until the procedure instructs you to do something with it.

17. Insert the spare STS1IN circuit pack into the empty slot. If you need detailed instructions, see Procedure 3-1, "Installing Circuit Packs."

18. At the craft interface terminal, check to see if the previous steps have cleared the problem by entering:

    TEST-PATH-STS1::::PAINTGRT;

    The system responds with one of the following messages:

    - For *Message Set 1*:

```
  <TID #n YY-MM-DD HH:MM:SS>
MTEST PATH STS1::::PAINTGRT COMPLD
/* STS1_IN,STS1_OUT:LOC,CHAN_OUT:LOC,CHAN_IN,
   CHAN_OUT:LOC,CHAN_IN:TAG:RESULT */
" <STS1_IN,STS1_OUT:LOC,CHAN_OUT:LOC,CHAN_IN,
   CHAN_OUT:LOC,CHAN_IN:TAG:RESULT> "
;
```

    - For *Message Set 2*:

```
  <TID YY-MM-DD HH:MM:SS>
M  TEST PATH STS1::::PAINTGRT COMPLD
   " <STS1_IN,STS1_OUT:LOC,CHAN_OUT:LOC,CHAN_IN,
        CHAN_OUT:LOC,CHAN_IN:TAG:RESULT> "
;
```

where

LOC = the STS1IN circuit pack location, identified in Step 1

RESULT= the test results; NULL means that the test could not be run at the time it was requested, PASS means the specified path is fault-free, FAIL means the associated path is failed

NOTE:
More than one path will be tested, which would result in more than one RESULT being reported in the message. However, each path will contain the STS1IN circuit pack identified in Step 12.

Do one of the following:

- If the system responds with NULL, continue this procedure at Step 19.
- If the system responds with PASS, continue this procedure at Step 20.
- If the system responds with FAIL, continue this procedure at Step 21.

19. Having received a NULL response, check to see that *all* the statements that follow are true:

    a. The input and output unit controllers, associated with the STS1IN circuit pack identified in Step 12, are in the in-service (IS) state.

    b. The protection switch circuit packs within the input unit, associated with the STS1IN circuit pack identified in Step 12, are in the in-service (IS) state.

    c. The circuit packs along the failed path, associated with the STS1IN circuit pack identified in Step 12, are present and provisioned and have no active failure conditions other than the PAINTGRT condition.

    Do one of the following:

    - If this is the first time you received the NULL response and all of the previous statements are *true*, you have a problem that needs to be reported to your system administrator or next level of technical support.
    - If this is the first time you received the NULL response and any or all of the previous statements are *false*, correct the situation(s) and repeat Step 18 from the beginning.
    - If this is the second time you have executed Step 18 and received the NULL response, stop here and call your system administrator or the next level of technical support.

20. Having received the PASS response, perform the following steps:

    a. Check the craft interface terminal for the two autonomous messages that follow:

    — First message for *Message Set 1*:

```
  <TID #n YY-MM-DD HH:MM:SS>
A <ASEQ> REPT SW EQPT
   /* WORKING ENTITY,SWITCH DIRECTION */
  " <WORKING ENTITY>,WKG "
;
```

— First message for *Message Set 2*:

```
  <TID YY-MM-DD HH:MM:SS>
A <ASEQ> REPT SW EQPT
   " <WORKING ENTITY>,WKG "
;
```

where:

WORKING ENTITY = the STS1OUT circuit pack identified in Step 1

— Second message for *Message Set 1*:

```
  <TID #n YY-MM-DD HH:MM:SS>
A <ASEQ> REPT SW EQPT
   /* WORKING ENTITY,SWITCH DIRECTION */
  " <WORKING ENTITY>,WKG "
;
```

— Second message for *Message Set 2*:

```
  <TID YY-MM-DD HH:MM:SS>
A <ASEQ> REPT SW EQPT
   " <WORKING ENTITY>,WKG "
;
```

where:

WORKING ENTITY = the DS3SW circuit pack identified in Step 1

b. Verify that the STS1OUT and DS3SW circuit packs identified in Step 1 no longer generate alarms, by entering the two commands that follow:

RTRV-ALM-EQPT::ALL::,PAINTGRT;

and

RTRV-PATH-STS1::ALL::PAINTGRT;

In both system responses, the STS1OUT and DS3SW circuit packs identified in Step 1 should *not* appear in the message and the red LEDs should no longer be lighted.

c. At the craft interface terminal, switch the STS1IN to a working state by entering:

ALW-SW-EQPT::ELOC::WKG;

where

ELOC = the STS1IN circuit pack location identified in Step 12, specified by STS1IN-{1 through 8}-{1 through 30}

d. Verify a successful switch to working of the STS1IN circuit pack identified in Step 12 by entering:

RTRV-STATE-EQPT::ELOC;

where

ELOC = the STS1IN circuit pack

The system output should be one of the following messages:

— For *Message Set 1*:

```
  <TID #n YY-MM-DD HH:MM:SS>
M  RTRV STATE EQPT::<ELOC>::ALL COMPLD
   /* LOC:STATE */
   " <LOC>,ACT "
;
```

— For *Message Set 2*:

```
  <TID YY-MM-DD HH:MM:SS>
M  RTRV STATE EQPT::<ELOC>::ALL COMPLD
   " <LOC>,ACT "
;
```

where

LOC = the STS1IN circuit pack identified in Step 12

- If the system shows the STS1IN circuit pack identified in Step 12 is active (ACT), continue this procedure at Step 20e.
- If the system responds with any other state, stop here and call your system administrator or the next level of technical support.

e. Using standard office procedures, label and record the STS1IN circuit pack, set aside in Step 16, as failed and in need of repair. If you need instructions for returning a failed circuit pack, see Procedure 3-11, "Returning Circuit Packs for Repair."

f. Since the original DS3SW circuit pack is not at fault, it can be put in the spares storage cabinet for future use.

g. You have successfully corrected this problem. If more alarms exist on the frame, return to Procedure 9-1, "How to Clear Alarms," to determine the next corrective action to take.

Checking the Cables (Input Side)

21. At the craft interface terminal, switch the STS1IN to a working state by entering:

    ALW-SW-EQPT::ELOC::WKG;

    where

    ELOC = the STS1IN circuit pack location identified in Step 12, specified by STS1IN-{1 through 8}-{1 through 30}

22. Verify a successful switch to working of the STS1IN circuit pack identified in Step 12 by entering:

    RTRV-STATE-EQPT::ELOC;

    where

    ELOC = the STS1IN circuit pack

    The system output should be one of the following messages:

    — For *Message Set 1*:

    ```
      <TID #n YY-MM-DD HH:MM:SS>
    M  RTRV STATE EQPT::<ELOC>::ALL COMPLD
       /* LOC:STATE */
       " <LOC>,ACT "
    ;
    ```

    — For *Message Set 2*:

    ```
      <TID YY-MM-DD HH:MM:SS>
    M  TRV STATE EQPT::<ELOC>::ALL COMPLD
       " <LOC>,ACT "
    ;
    ```

    where

    LOC = the STS1IN circuit pack identified in Step 12

    - If the system shows the STS1IN circuit pack identified in Step 12 is active (ACT), continue this procedure at Step 23.
    - If the system responds with any other state, stop here and call your system administrator or the next level of technical support.

23. Identify the failed input cable by entering:

    RTRV-CABLE-STS1::ALL::PAINTGRT;

    The system responds with one of the following messages:

— For *Message Set 1*:

```
  <TID #n YY-MM-DD HH:MM:SS>
M  RTRV CABLE STS1::::PAINTGRT COMPLD
/* STS1IN,CABLE,PIN #:DS3SW_IN,CABLE,PIN #:
    DS3SW_OUT,CABLE,PIN #:STS1OUT,CABLE,PIN # */
" <STS1IN,CABLE,PIN #:DS3SW_IN,CABLE,PIN #:
    DS3SW_OUT,CABLE,PIN #:STS1OUT,CABLE,PIN #> "
;
```

— For *Message Set 2*:

```
  <TID YY-MM-DD HH:MM:SS>
M  RTRV CABLE STS1::::PAINTGRT COMPLD
   " <STS1IN,CABLE,PIN #:DS3SW_IN,CABLE,PIN #:
      DS3SW_OUT,CABLE,PIN #:STS1OUT,CABLE,PIN #> "
;
```

Note the cable that is associated with the STS1IN circuit pack identified in Step 12. The numbers in the CABLE field, those starting with J, correlate to the numbers on the octopus cable connectors attached to the backplane. The suspected cable segment will be that segment between the STS1 input interface (STS1IN INTFC) module and the DS3 switch (DS3SW) module.

24. Make sure you have written down the failed cable's location for future use.

25. Wearing an ESD wrist strap, remove the backplane covers. Using the cable identification from Step 24, visually examine, at both ends, the cable that runs between the STS1IN module and the DS3SW module.

26. Visually verify that the cable is correctly plugged in and that there are no offset, misaligned, or cocked connectors.

    - If you observe any of the above problems, continue this procedure at Step 27.
    - If you do *not* observe any problems with the cable, continue this procedure at Step 31.

27. Rectify the problem observed with the cable identified in Step 24.

28. At the craft interface terminal, check to see if the previous steps have cleared the problem by entering:

    TEST-PATH-STS1::::PAINTGRT;

The system responds with one of the following messages:

— For *Message Set 1*:

```
  <TID #n YY-MM-DD HH:MM:SS>
M  TEST PATH STS1:::PAINTGRT COMPLD
   /* STS1_IN,STS1_OUT:LOC,CHAN_OUT:LOC,CHAN_IN,
           CHAN_OUT:LOC,CHAN_IN:TAG:RESULT */
   " <STS1_IN,STS1_OUT:LOC,CHAN_OUT:LOC,CHAN_IN,
           CHAN_OUT:LOC,CHAN_IN:TAG:RESULT> "
;
```

— For *Message Set 2*:

```
  <TID YY-MM-DD HH:MM:SS>
M  TEST PATH STS1:::PAINTGRT COMPLD
   " <STS1_IN,STS1_OUT:LOC,CHAN_OUT:LOC,CHAN_IN,
           CHAN_OUT:LOC,CHAN_IN:TAG:RESULT> "
;
```

where

`LOC` = the DS3SW circuit pack location

`RESULT` = the test results; `NULL` means that the test could not be run at the time it was requested, `PASS` means the specified path is fault-free, `FAIL` means the associated path is failed

Do one of the following:

- If the system responds with `NULL`, continue this procedure at Step 29.
- If the system responds with `PASS`, continue this procedure at Step 30.
- If the system responds with `FAIL`, continue this procedure at Step 31.

29. Having received a `NULL` response, check to see that *all* the statements that follow are true:

    a. The input and output unit controllers, associated with the STS1OUT circuit pack identified in Step 1, are in the in-service (`IS`) state.

    b. The protection switch circuit packs within the input unit, associated with the STS1OUT circuit pack identified in Step 1, are in the in-service (`IS`) state.

    c. The circuit packs along the failed path, associated with the STS1OUT circuit pack identified in Step 1, are present and provisioned and have no active failure conditions other than the PAINTGRT condition.

    d. The input port, associated with the STS1OUT circuit pack identified in Step 1, has a valid incoming STS-1 signal present.

Do one of the following:

- If this is the first time you received the NULL response and all of the previous statements are *true*, you have a problem that needs to be reported to your system administrator or next level of technical support.
- If this is the first time you received the NULL response and any or all of the previous statements are *false*, correct the situation(s) and repeat Step 28 from the beginning.
- If this is the second time you have executed Step 28 and received the NULL response, stop here and call your system administrator or the next level of technical support.

30. Having received the PASS response, perform the following steps:

    a. Check the craft interface terminal for the two autonomous messages that follow:

    — First message for *Message Set 1*:

```
  <TID #n YY-MM-DD HH:MM:SS>
A <ASEQ> REPT SW EQPT
    /* WORKING ENTITY,SWITCH DIRECTION */
    " <WORKING ENTITY>,WKG "
;
```

    — First message for *Message Set 2*:

```
  <TID YY-MM-DD HH:MM:SS>
A <ASEQ> REPT SW EQPT
    " <WORKING ENTITY>,WKG "
;
```

    where

    WORKING ENTITY= the STS1OUT circuit pack identified in Step 1

    — Second message for *Message Set 1*:

```
  <TID #n YY-MM-DD HH:MM:SS>
A <ASEQ> REPT SW EQPT
    /* WORKING ENTITY,SWITCH DIRECTION */
    " <WORKING ENTITY>,WKG "
;
```

    — Second message for *Message Set 2*:

```
  <TID YY-MM-DD HH:MM:SS>
A <ASEQ> REPT SW EQPT
    " <WORKING ENTITY>,WKG "
;
```

    where

    WORKING ENTITY= the DS3SW circuit pack identified in Step 1.

b. Verify that the STS1OUT and DS3SW circuit packs identified in Step 1 no longer generate alarms by entering the two commands that follow:

RTRV-ALM-EQPT::ALL::,PAINTGRT;

and

RTRV-PATH-STS1::ALL::PAINTGRT;

In both system responses, the STS1OUT and DS3SW circuit packs identified in Step 1 should *not* appear in the message and the red LEDs should no longer be lighted.

c. Since the original DS3SW and STS1IN circuit packs are not at fault, they can be put in the spares storage cabinet for future use.

d. Wearing an ESD wrist strap, reattach the backplane covers.

e. You have successfully corrected the problem. If more alarms exist on the frame, return to Procedure 9-1, "How to Clear Alarms," to determine the next corrective action to take.

Checking the Cables (Output Side)

31. Having arrived at this step because you did not observe cable problems in Step 26 or because you received the FAIL response in Step 28, identify the failed output cable by entering:

RTRV-CABLE-STS1::ALL::PAINTGRT;

The system responds with one of the following messages:

— For *Message Set 1*:

```
  <TID #n YY-MM-DD HH:MM:SS>
M  RTRV CABLE STS1::::PAINTGRT COMPLD
 /* STS1IN,CABLE,PIN #:DS3SW_IN,CABLE,PIN #:
     DS3SW_OUT,CABLE,PIN #:STS1OUT,CABLE,PIN # */
 " <STS1IN,CABLE,PIN #:DS3SW_IN,CABLE,PIN #:
     DS3SW_OUT,CABLE,PIN #:STS1OUT,CABLE,PIN #> "
;
```

— For *Message Set 2*:

```
  <TID YY-MM-DD HH:MM:SS>
M  RTRV CABLE STS1::::PAINTGRT COMPLD
" <STS1IN,CABLE,PIN #:DS3SW_IN,CABLE,PIN #:
   DS3SW_OUT,CABLE,PIN #:STS1OUT,CABLE,PIN #> "
;
```

Be certain to note the cable that is associated with the STS1OUT circuit pack identified in Step 1. The numbers in the *CABLE* field, those starting with *J*, correlate to the numbers on the octopus cable connectors attached to

the backplane. The suspected cable segment will be that segment between the DS3 switch (DS3SW) module and the STS1 output interface (STS1OUT INTFC) module.

32. Make sure you have written down the failed cable's location for future use.
33. Wearing an ESD wrist strap, remove the backplane covers. Using the cable identification from Step 32, visually examine, at both ends, the cable that runs between the DS3SW module and the STS1OUT module.
34. Visually verify that the cable is correctly plugged in and that there are no offset, misaligned, or cocked connectors.
    - If you observe any of the above problems, continue this procedure at Step 35.
    - If you do *not* observe any problems with the cable, continue this procedure at Step 39.
35. Rectify the problem observed with the cable identified in Step 32.
36. At the craft interface terminal, check to see if the previous steps have cleared the problem by entering:

    TEST-PATH-STS1::::PAINTGRT;

    The system responds with one of the following messages:

    — For *Message Set 1*:

```
  <TID #n YY-MM-DD HH:MM:SS>
M  TEST PATH STS1:::PAINTGRT COMPLD
   /* STS1_IN,STS1_OUT:LOC,CHAN_OUT:LOC,CHAN_IN,
         CHAN_OUT:LOC,CHAN_IN:TAG:RESULT */
   " <STS1_IN,STS1_OUT:LOC,CHAN_OUT:LOC,CHAN_IN,
         CHAN_OUT:LOC,CHAN_IN:TAG:RESULT> "
;
```

    — For *Message Set 2*:

```
  <TID YY-MM-DD HH:MM:SS>
M  TEST PATH STS1:::PAINTGRT COMPLD
   " <STS1_IN,STS1_OUT:LOC,CHAN_OUT:LOC,CHAN_IN,
         CHAN_OUT:LOC,CHAN_IN:TAG:RESULT> "
;
```

where

LOC = the DS3SW circuit pack location

RESULT = the test results; NULL means that the test could not be run at the time it was requested, PASS means the specified path is fault-free, FAIL means the associated path is failed

Do one of the following:

- If the system responds with NULL, continue this procedure at Step 37.
- If the system responds with PASS, continue this procedure at Step 38.
- If the system responds with FAIL, continue this procedure at Step 39.

37. Having received a NULL response, check to see that *all* the statements that follow are true:

    a. The input and output unit controllers, associated with the STS1OUT circuit pack identified in Step 1, are in the in-service (IS) state.

    b. The protection switch circuit packs within the input unit, associated with the STS1OUT circuit pack identified in Step 1, are in the in-service (IS) state.

    c. The circuit packs along the failed path, associated with the STS1IOUT circuit pack identified in Step 1, are present and provisioned and have no active failure conditions other than the PAINTGRT condition.

    Do one of the following:

    - If this is the first time you received the NULL response and all of the previous statements are *true*, you have a problem that needs to be reported to your system administrator or next level of technical support.
    - If this is the first time you received the NULL response and any or all of the previous statements are *false*, correct the situation(s) and repeat Step 36 from the beginning.
    - If this is the second time you have executed Step 36 and received the NULL response, stop here and call your system administrator or the next level of technical support.

38. Having received the PASS response, perform the following steps:

    a. Check the craft interface terminal for the two autonomous messages that follow:

    — First message for *Message Set 1*:

```
  <TID #n YY-MM-DD HH:MM:SS>
A <ASEQ> REPT SW EQPT
   /* WORKING ENTITY,SWITCH DIRECTION */
   " <WORKING ENTITY>,WKG "
;
```

— First message for *Message Set 2*:

```
  <TID YY-MM-DD HH:MM:SS>
A <ASEQ> REPT SW EQPT
   " <WORKING ENTITY>,WKG "
;
```

where

`WORKING ENTITY` = the STS1OUT circuit pack identified in Step 1

— Second message for *Message Set 1*:

```
  <TID #n YY-MM-DD HH:MM:SS>
A <ASEQ> REPT SW EQPT
   /* WORKING ENTITY,SWITCH DIRECTION */
   " <WORKING ENTITY>,WKG "
;
```

— Second message for *Message Set 2*:

```
  <TID YY-MM-DD HH:MM:SS>
A <ASEQ> REPT SW EQPT
  " <WORKING ENTITY>,WKG "
;
```

where

`WORKING ENTITY`= the DS3SW circuit pack identified in Step 1

b. Verify that the STS1OUT and DS3SW circuit packs identified in Step 1 no longer generate alarms by entering the two commands that follow:

`RTRV-ALM-EQPT::ALL::,PAINTGRT;`

and

`RTRV-PATH-STS1::ALL::PAINTGRT;`

In both system responses, the STS1OUT and DS3SW circuit packs identified in Step 1 should *not* appear in the message and the red LEDs should no longer be lighted.

c. Since the original DS3SW and STS1IN circuit packs are not at fault, they can be put in the spares storage cabinet for future use.

d. Wearing an ESD wrist strap, reattach the backplane covers.

e. You have successfully corrected the problem. If more alarms exist on the frame, return to Procedure 9-1, "How to Clear Alarms," to determine the next corrective action to take.

39. Having arrived at this step because you did *not* observe cable problems in Step 34 or because you received the FAIL response in Step 36, call your system administrator or the next level of technical support to fix the cable. Note the number of this procedure and the number of the next step so that you can return to the correct location once the failed cable is repaired.

40. After the failed cable has been repaired by your system administrator or the next level of technical support, continue this procedure at Step 41.

41. At the craft interface terminal, verify that the problem has been corrected by entering:

    TEST-PATH-STS1::::PAINTGRT;

    The system responds with one of the following messages:

    — For *Message Set 1*:

    ```
      <TID #n YY-MM-DD HH:MM:SS>
    M  TEST PATH STS1::::PAINTGRT COMPLD
       /* STS1_IN,STS1_OUT:LOC,CHAN_OUT:LOC,CHAN_IN,
           CHAN_OUT:LOC,CHAN_IN:TAG:RESULT */
       " <STS1_IN,STS1_OUT:LOC,CHAN_OUT:LOC,CHAN_IN,
           CHAN_OUT:LOC,CHAN_IN:TAG:>PASS "
    ;
    ```

    — For *Message Set 2*:

    ```
      <TID YY-MM-DD HH:MM:SS>
    M  TEST PATH STS1::::PAINTGRT COMPLD
       " <STS1_IN,STS1_OUT:LOC,CHAN_OUT:LOC,CHAN_IN,
           CHAN_OUT:LOC,CHAN_IN:TAG:>PASS "
    ;
    ```

42. Verify that the system output is PASS. Having received the PASS response, perform the following steps:

    a. Check the craft interface terminal for the two autonomous messages that follow:

    — First message for *Message Set 1*:

    ```
      <TID #n YY-MM-DD HH:MM:SS>
    A <ASEQ> REPT SW EQPT
       /* WORKING ENTITY,SWITCH DIRECTION */
       " <WORKING ENTITY>,WKG "
    ;
    ```

    — First message for *Message Set 2*:

    ```
      <TID YY-MM-DD HH:MM:SS>
    A <ASEQ> REPT SW EQPT
       " <WORKING ENTITY>,WKG "
    ;
    ```

where

WORKING ENTITY = the STS1OUT circuit pack identified in Step 1

— Second message for *Message Set 1*:

```
  <TID #n YY-MM-DD HH:MM:SS>
A <ASEQ> REPT SW EQPT
    /* WORKING ENTITY,SWITCH DIRECTION */
    " <WORKING ENTITY>,WKG "
;
```

— Second message for *Message Set 2*:

```
  <TID YY-MM-DD HH:MM:SS>
A <ASEQ> REPT SW EQPT
    " <WORKING ENTITY>,WKG "
;
```

where

WORKING ENTITY = the DS3SW circuit pack identified in Step 1

b. Verify that the STS1OUT and DS3SW circuit packs identified in Step 1 no longer generate alarms by entering the two commands that follow:

RTRV-ALM-EQPT::ALL::,PAINTGRT;

and

RTRV-PATH-STS1::ALL::PAINTGRT;

In both system responses, the STS1OUT and DS3SW circuit packs identified in Step 1should *not* appear in the message and the red LEDs should no longer be lighted.

c. Since the original DS3SW and STS1IN circuit packs are not at fault, they can be put in the spares storage cabinet for future use.

d. Wearing an ESD wrist strap, reattach the backplane covers.

e. You have successfully corrected the problem. If more alarms exist on the frame, return to Procedure 9-1, "How to Clear Alarms," to determine the next corrective action to take.

Procedure 12-7. STS1IN:MN,PAINTGRT Alarm with No Other Circuit Packs Showing PAINTGRT

Please note that there are three sections within Procedure 12-7; each section represents one possible source of the PAINTGRT condition:

- Checking the STS1IN Circuit Pack
- Checking the DS3SW Circuit Pack
- Checking the Cables

Sometimes you will use the steps in all three sections to clear the PAINTGRT condition; other times only the first, or first and second, sections will be needed. *However, regardless of the number of sections you use, the steps must be executed in the order presented.*

CAUTION:
Electrostatic discharge (ESD) damage.
ESD can cause damage to the components of a DACS III-2000 system.
Wear an ESD wrist strap when working around the frame.

Checking the STS1IN Circuit Pack

1. Have the system output from Procedure 12-1, in which you identified the affected STS1IN circuit pack, available for referencing.
2. Obtain a spare STS1IN (ARW11) circuit pack.
   - If a spare circuit pack is not available, stop here and call your system administrator or the next level of technical support.
   - If a spare circuit pack is available, continue this procedure at Step 3.
3. At the craft interface terminal, verify that the STS1IN circuit pack is in the out-of-service fault (OOS-FLT) state by entering:

   RTRV-STATE-EQPT::ELOC::ALL;

   where

   ELOC = the STS1IN circuit pack identified in Step 1, specified as STS1IN-{1 through 8}-{1 through 30}

   The system should respond with one of the following messages:

— For *Message Set 1*:

```
  <TID #n YY-MM-DD HH:MM:SS>
M  RTRV STATE EQPT::<ELOC>::ALL COMPLD
   /* LOC:STATE */
   " STS1IN-<unit-slot>:OOS-FLT "
;
```

— For *Message Set 2*:

```
  <TID YY-MM-DD HH:MM:SS>
M  RTRV STATE EQPT::<ELOC>::ALL COMPLD
   " STS1IN-<unit-slot>:OOS-FLT "
;
```

- If the system shows the STS1IN circuit pack is out-of-service fault (OOS-FLT), continue this procedure at Step 4.
- If the system responds with any other state, stop here and call your system administrator or the next level of technical support.

4. At the craft interface terminal, verify that the related protection circuit packs are in the active (ACT) state by entering:

RTRV-STATE-EQPT::ELOC::ALL;

where

ELOC = the protection packs; identified as STS1IN-{1 through 8}-P1&-P2

The system should respond with one of the following messages:

— For *Message Set 1*:

```
  <TID #n YY-MM-DD HH:MM:SS>
M  RTRV STATE EQPT::<ELOC>::ALL COMPLD
   /* LOC:STATE */
   " STS1IN-<unit>-P1:ACT "
   " STS1IN-<unit>-P2:ACT "
;
```

— For *Message Set 2*:

```
  <TID YY-MM-DD HH:MM:SS>
M  RTRV STATE EQPT::<ELOC>::ALL COMPLD
   " STS1IN-<unit>-P1:ACT "
   " STS1IN-<unit>-P2:ACT "
;
```

- If the system shows the protection circuit packs are active (ACT), continue this procedure at Step 5.
- If the system responds with any other state, stop here and call your system administrator or the next level of technical support.

5. Go to the DACS III-2000 frame and remove the protected STS1IN circuit pack that was identified in Step 1. If you need detailed instructions, see Procedure 3-2, "Removing Circuit Packs."

6. Using standard office procedures, write down the

   — serial number of the removed STS1IN circuit pack

   — unit and slot from which it was removed.

   Set aside the removed STS1IN circuit pack until the procedure instructs you to do something with it.

7. Insert the spare STS1IN circuit pack into the empty slot. If you need detailed instructions, see Procedure 3-1, "Installing Circuit Packs."

8. At the craft interface terminal, check to see if the previous steps have cleared the problem by entering:

   TEST-PATH-STS1::::PAINTGRT;

   The system responds with one of the following messages:

   — For *Message Set 1*:

```
  <TID #n YY-MM-DD HH:MM:SS>
M  TEST PATH STS1::::PAINTGRT COMPLD
   /* STS1_IN,STS1_OUT:LOC,CHAN_OUT:LOC,CHAN_IN,
         CHAN_OUT:LOC,CHAN_IN:TAG:RESULT */
   " <STS1_IN,STS1_OUT:LOC,CHAN_OUT:LOC,CHAN_IN,
         CHAN_OUT:LOC,CHAN_IN:TAG:RESULT> "
;
```

   — For *Message Set 2*:

```
  <TID YY-MM-DD HH:MM:SS>
M  TEST PATH STS1::::PAINTGRT COMPLD
   " STS1_IN,STS1_OUT:LOC,CHAN_OUT:LOC,CHAN_IN,
         CHAN_OUT:LOC,CHAN_IN:TAG:RESULT> "
;
```

   where

   LOC = the STS1IN circuit pack location

   RESULT = the test results; NULL means that the test could not be run at the time it was requested, PASS means the specified path is fault-free, FAIL means the associated path is failed

Do one of the following:

- If the system responds with NULL, continue this procedure at Step 9.
- If the system responds with PASS, continue this procedure at Step 10.
- If the system responds with FAIL, continue this procedure at Step 11.

9. Having received a NULL response, check to see that *all* the statements that follow are true:

   a. The input and output unit controllers, associated with the STS1IN circuit pack identified in Step 1, are in the in-service (IS) state.

   b. The protection switch circuit packs within the input unit, associated with the STS1IN circuit pack identified in Step 1, are in the in-service (IS) state.

   c. The circuit packs along the failed path, associated with the STS1IN circuit pack identified in Step 1, are present and provisioned and have no active failure conditions other than the PAINTGRT condition.

   d. The input port, associated with the STS1IN circuit pack identified in Step 1, has a valid incoming STS-1 signal present.

   Do one of the following:

   - If this is the first time you received the NULL response and all of the previous statements are *true*, you have a problem that needs to be reported to your system administrator or next level of technical support.
   - If this is the first time you received the NULL response and any or all of the previous statements are *false*, correct the situation(s) and repeat Step 8 from the beginning.
   - If this is the second time you have executed Step 8 and received the NULL response, stop here and call your system administrator or the next level of technical support.

10. Having received the PASS response, perform the following steps:

    a. Check the craft interface terminal for one of the following autonomous messages:

       — For *Message Set 1*:

```
  <TID #n YY-MM-DD HH:MM:SS>
A <ASEQ> REPT SW EQPT
    /* WORKING ENTITY,SWITCH DIRECTION */
    " <WORKING ENTITY>,WKG "
;
```

— For *Message Set 2*:

```
  <TID YY-MM-DD HH:MM:SS>
A <ASEQ> REPT SW EQPT
   " <WORKING ENTITY>,WKG "
;
```

where

`WORKING ENTITY` = the STS1IN circuit pack identified in Step 1

b. Verify that the STS1IN circuit pack identified in Step 1 no longer generates an alarm by entering the two commands that follow:

RTRV-ALM-EQPT::ALL::PAINTGRT;

and

RTRV-PATH-STS1::ALL::PAINTGRT;

In both system responses, the STS1IN circuit pack identified in Step 1 should *not* appear in the message and the red LED should no longer be lighted.

c. Using standard office procedures, label and record the STS1IN circuit pack, set aside in Step 6, as failed and in need of repair. If you need instructions for returning a failed circuit pack, see Procedure 3-11, "Returning Circuit Packs for Repair."

d. You have successfully corrected the problem. If more alarms exist on the frame, return to Procedure 9-1, "How to Clear Alarms," to determine the next corrective action to take.

Checking the DS3SW Circuit Pack

11. Having received the `FAIL` response, check for the DS3SW circuit pack that is associated with the failed path by entering:

RTRV-PATH-STS1::ALL::PAINTGRT;

The system should respond with one of the following messages:

— For *Message Set 1*:

```
  <TID #n YY-MM-DD HH:MM:SS>
M  RTRV PATH STS1::: COMPLD
   /* STS1_IN,STS1_OUT:LOC,CHAN_OUT:LOC,CHAN_IN,
         CHAN_OUT:LOC,CHAN_IN */
   " <STS1_IN,STS1_OUT:LOC,CHAN_OUT:LOC,CHAN_IN,
         CHAN_OUT:LOC,CHAN_IN> "
;
```

— For *Message Set 2*:

```
  <TID YY-MM-DD HH:MM:SS>
M  RTRV PATH STS1::: COMPLD
   " <STS1_IN,STS1_OUT:LOC,CHAN_OUT:LOC,CHAN_IN,
        CHAN_OUT:LOC,CHAN_IN> "
;
```

- If the system responds with COMPLD, perform the following steps:

  a. Write down the location of the DS3SW circuit pack identified in the message. The second LOC parameter shows the DS3SW location, specified as DS3SW-{1 through 4}-{1 through 16}. (There will be two failed paths identified in the message. This is fine; the DS3SW pack will be the same in each path. Remember, when you look at the frame this DS3SW circuit pack will *not* have a lighted red LED.)

  b. Continue this procedure at Step 12.

- If the system responds with DENY, stop here and call your system administrator or the next level of technical support.

12. Obtain a spare DS3SW (AWL1 or AYJ1) circuit pack.

    - If a spare circuit pack is not available, stop here and call your system administrator or the next level of technical support.
    - If a spare circuit pack is available, continue this procedure at Step 13.

13. Switch the DS3SW circuit pack to protection by entering:

    SW-TOPROTN-EQPT::ELOC;

    where

    ELOC = the DS3SW circuit pack identified in Step 11, specified as DS3SW-{1 through 4}-{1 through 16}

14. Go to the DACS III-2000 frame and remove the DS3SW circuit pack that was identified in Step 11.

    - If you are working on a 1024-size frame and need detailed instructions, see Procedure 3-2, "Removing Circuit Packs."
    - If you are working on a 2048-size frame and need detailed instructions, see Procedure 3-4, "Removing DS3SWL CTR Circuit Packs."

15. Using standard office procedures, write down the

    — serial number of the removed DS3SW circuit pack

    — slot from which it was removed

    Set aside the removed DS3SW circuit pack until the procedure instructs you to do something with it.

16. Insert the spare DS3SW circuit pack into the empty slot.
    - If you are working on a 1024-size frame and need detailed instructions, see Procedure 3-1, "Installing Circuit Packs."
    - If you are working on a 2048-size frame and need detailed instructions, see Procedure 3-3, "Installing DS3SWL CTR Circuit Packs."
17. At the craft interface terminal, check to see if the previous steps have cleared the problem by entering:

    TEST-PATH-STS1::::PAINTGRT;

    The system responds with one of the following messages:

    — For *Message Set 1*:

    ```
      <TID #n YY-MM-DD HH:MM:SS>
    M  TEST PATH STS1::::PAINTGRT COMPLD
       /* EC1_IN,EC1_OUT:LOC,CHAN_OUT:LOC,CHAN_IN,
             CHAN_OUT:LOC,CHAN_IN:TAG:RESULT */
       " <EC1_IN,EC1_OUT:LOC,CHAN_OUT:LOC,CHAN_IN,
             CHAN_OUT:LOC,CHAN_IN:TAG:RESULT> "
    ;
    ```

    — For *Message Set 2*:

    ```
      <TID YY-MM-DD HH:MM:SS>
    M  TEST PATH STS1::::PAINTGRT COMPLD
       " <EC1_IN,EC1_OUT:LOC,CHAN_OUT:LOC,CHAN_IN,
             CHAN_OUT:LOC,CHAN_IN:TAG:RESULT> "
    ;
    ```

    where

    LOC = the DS3SW circuit pack location identified in Step 11, specified as DS3SW-{1 through 4}-{1 through 16}

    RESULT = the test results; NULL means that the test could not be run at the time it was requested, PASS means the specified path is fault-free, FAIL means the associated path is failed

    Do one of the following:

    - If the system responds with NULL, continue this procedure at Step 18.
    - If the system responds with PASS, continue this procedure at Step 19.
    - If the system responds with FAIL, continue this procedure at Step 20.
18. Having received a NULL response, check to see that *all* the statements that follow are true:

a. The input and output unit controllers, associated with the STS1IN circuit pack identified in Step 1, are in the in-service (IS) state.

b. The protection switch circuit packs within the input unit, associated with the STS1IN circuit pack identified in Step 1, are in the in-service (IS) state.

c. The circuit packs along the failed path, associated with the STS1IN circuit pack identified in Step 1, are present and provisioned and have no active failure conditions other than the PAINTGRT condition.

d. The input port, associated with the STS1IN circuit pack identified in Step 1, has a valid incoming STS1IN signal present.

Do one of the following:

- If this is the first time you received the NULL response and all of the previous statements are *true*, you have a problem that needs to be reported to your system administrator or next level of technical support.
- If this is the first time you received the NULL response and any or all of the previous statements are *false*, correct the situation(s) and repeat Step 17 from the beginning.
- If this is the second time you have executed Step 17 and received the NULL response, stop here and call your system administrator or the next level of technical support.

19. Having received the PASS response, perform the following steps:

a. Check the craft interface terminal for one of the following autonomous messages:

— For *Message Set 1*:

```
  <TID #n YY-MM-DD HH:MM:SS>
A <ASEQ> REPT SW EQPT
    /* WORKING ENTITY,SWITCH DIRECTION */
    " <WORKING ENTITY>,WKG "
;
```

— For *Message Set 2*:

```
  <TID YY-MM-DD HH:MM:SS>
A <ASEQ> REPT SW EQPT
    " <WORKING ENTITY>,WKG "
;
```

where

WORKING ENTITY = the STS1IN circuit pack identified in Step 1

b. Verify that the STS1IN circuit pack identified in Step 1 no longer generates an alarm by entering the two commands that follow:

RTRV-ALM-EQPT::ALL::PAINTGRT;

and

RTRV-PATH-STS1::ALL::PAINTGRT;

In both system responses, the STS1IN circuit pack identified in Step 1 should *not* appear in the message and the red LED should no longer be lighted.

c. At the craft interface terminal, switch the DS3SW to a working state by entering:

ALW-SW-EQPT::ELOC::WKG;

where

ELOC = the DS3SW circuit pack location identified in Step 11; specified by DS3SW-{1 through 4}-{1 through 16}

d. Verify a successful switch to working of the DS3SW circuit pack identified in Step 11 by entering:

RTRV-STATE-EQPT::ELOC;

where

ELOC = the DS3SW circuit pack

The system output should be one of the following messages:

— For *Message Set 1*:

```
  <TID #n YY-MM-DD HH:MM:SS>
M  RTRV STATE EQPT::<ELOC>::ALL COMPLD
   /* LOC:STATE */
   " <LOC>:ACT "
;
```

— For *Message Set 2*:

```
  <TID YY-MM-DD HH:MM:SS>
M  RTRV STATE EQPT::<ELOC>::ALL COMPLD
   " <LOC>:ACT "
;
```

where

LOC = the DS3SW circuit pack identified in Step 11

- If the system shows the DS3SW circuit pack identified in Step 11 is ACT, continue this procedure at Step 19e.
- If the system responds with any other state stop here and call your system administrator or the next level of technical support.

e. Using standard office procedures, label and record the DS3SW circuit pack, set aside in Step 15, as failed and in need of repair. If you need instructions for returning a failed circuit pack, see Procedure 3-11, "Returning Circuit Packs for Repair."

f. Since the original STS1IN circuit pack is not at fault, it can be put in the spares storage cabinet for future use.

g. You have successfully corrected the problem. If more alarms exist on the frame, return to Procedure 9-1, "How to Clear Alarms," to determine the next corrective action to take.

Checking the Cables

20. Having received the FAIL response, identify the failed cable by entering:

RTRV-CABLE-STS1::ALL::PAINTGRT;

The system responds with one of the following messages:

— For *Message Set 1*:

```
  <TID #n YY-MM-DD HH:MM:SS>
M  RTRV CABLE STS1::::PAINTGRT COMPLD
   /* STS1IN,CABLE,PIN #:DS3SW_IN,CABLE,PIN #:
      DS3SW_OUT,CABLE,PIN #:STS1OUT,CABLE,PIN # */
   " <STS1IN,CABLE,PIN #:DS3SW_IN,CABLE,PIN #:
      DS3SW_OUT,CABLE,PIN #:STS1OUT,CABLE,PIN #> "
;
```

— For *Message Set 2*:

```
   <TID YY-MM-DD HH:MM:SS>
M   RTRV CABLE STS1::::PAINTGRT COMPLD
    " <STS1IN,CABLE,PIN #:DS3SW_IN,CABLE,PIN #:
       DS3SW_OUT,CABLE,PIN #:STS1OUT,CABLE,PIN #> "
;
```

Find the output line that identifies the STS1IN circuit pack that you noted in Step 1. The numbers in the CABLE field, those starting with J, correlate to the numbers on the octopus cable connectors attached to the backplane. The suspected cable segment will be that segment between the STS1 input interface (STS1IN INTFC) module and the DS3 switch (DS3SW) module.

21. Make sure you have written down the failed cable's location for future use.

22. Wearing an ESD wrist strap, remove the backplane covers. Using the cable identification from Step 21, visually examine, at both ends, the cable that runs between the STS1IN module and the DS3SW module.

23. Visually verify that the cable is correctly plugged in and that there are no offset, misaligned, or cocked connectors.

- If you observe any of the above problems, continue this procedure at Step 24.
- If you do *not* observe any problems with the cable, continue this procedure at Step 28.

24. Rectify the problem observed with the cable identified in Step 21.

25. At the craft interface terminal, check to see if the previous steps have cleared the problem by entering:

    TEST-PATH-STS1::::PAINTGRT;

    The system responds with one of the following messages:

    — For *Message Set 1*:

    ```
      <TID #n YY-MM-DD HH:MM:SS>
    M  TEST PATH STS1:::PAINTGRT COMPLD
       /* EC1_IN,EC1_OUT:LOC,CHAN_OUT:LOC,CHAN_IN,
             CHAN_OUT:LOC,CHAN_IN:TAG:RESULT */
       " <EC1_IN,EC1_OUT:LOC,CHAN_OUT:LOC,CHAN_IN,
             CHAN_OUT:LOC,CHAN_IN:TAG:RESULT> "
    ;
    ```

    — For *Message Set 2*:

    ```
      <TID YY-MM-DD HH:MM:SS>
    M  TEST PATH STS1:::PAINTGRT COMPLD
       " <EC1_IN,EC1_OUT:LOC,CHAN_OUT:LOC,CHAN_IN,
             CHAN_OUT:LOC,CHAN_IN:TAG:RESULT> "
    ;
    ```

    where

    LOC = the STS1IN circuit pack location

    RESULT = the test results; NULL means that the test could not be run at the time it was requested, PASS means the specified path is fault-free, FAIL means the associated path is failed

    Do one of the following:

    - If the system responds with NULL, continue this procedure at Step 26.
    - If the system responds with PASS, continue this procedure at Step 27.
    - If the system responds with FAIL, continue this procedure at Step 28.

26. Having received a NULL response, check to see that *all* the statements that follow are true:

    a. The input and output unit controllers, associated with the STS1IN circuit pack identified in Step 1, are in the in-service (IS) state.

b. The protection switch circuit packs within the input unit, associated with the STS1IN circuit pack identified in Step 1, are in the in-service (IS) state.

c. The circuit packs along the failed path, associated with the STS1IN circuit pack identified in Step 1, are present and provisioned and have no active failure conditions other than the PAINTGRT condition.

d. The input port, associated with the STS1IN circuit pack identified in Step 1, has a valid incoming STS-1 signal present.

Do one of the following:

- If this is the first time you received the NULL response and all of the previous statements are *true*, you have a problem that needs to be reported to your system administrator or next level of technical support.
- If this is the first time you received the NULL response and any or all of the previous statements are *false*, correct the situation(s) and repeat Step 25 from the beginning.
- If this is the second time you have executed Step 25 and received the NULL response, stop here and call your system administrator or the next level of technical support.

27. Having received the PASS response, perform the following steps:

a. Check for one of the following autonomous messages from the list that appears:

— For *Message Set 1*:

```
  <TID #n YY-MM-DD HH:MM:SS>
A <ASEQ> REPT SW EQPT
    /* WORKING ENTITY,SWITCH DIRECTION */
    " <WORKING ENTITY>,WKG "
;
```

— For *Message Set 2*:

```
  <TID YY-MM-DD HH:MM:SS>
A <ASEQ> REPT SW EQPT
    " <WORKING ENTITY>,WKG "
;
```

where

WORKING ENTITY = the STS1IN circuit pack identified in Step 1

b. Verify that the STS1IN circuit pack identified in Step 1 no longer generates an alarm by entering the two commands that follow:

```
RTRV-ALM-EQPT::ALL::PAINTGRT;
```

and

RTRV-PATH-STS1::ALL::PAINTGRT;

In both system responses, the STS1IN circuit pack identified in Step 1 should *not* appear in the message and the red LED should no longer be lighted.

c. At the craft interface terminal, switch the DS3SW to a working state by entering:

ALW-SW-EQPT::ELOC::WKG;

where

ELOC = the DS3SW circuit pack identified in Step 11, specified as DS3SW-{1 through 4}-{1 through 16}

d. Verify a successful switch to working of the DS3SW circuit pack by entering:

RTRV-STATE-EQPT::ELOC;

where

ELOC = the DS3SW circuit pack identified in Step 11

The system response should be one of the following messages:

— For *Message Set 1*:

```
    <TID #n YY-MM-DD HH:MM:SS>
M   RTRV STATE EQPT::<ELOC>::ALL COMPLD
    /* LOC:STATE */
    " <LOC>:ACT "
;
```

— For *Message Set 2*:

```
    <TID YY-MM-DD HH:MM:SS>
M   RTRV STATE EQPT::<ELOC>::ALL COMPLD
    " <LOC>:ACT "
;
```

where

LOC = the DS3SW circuit pack identified in Step 11

e. Since the original STS1IN and DS3SW circuit packs are not at fault, they can be put in the spares storage cabinet for future use.

f. Wearing an ESD wrist strap, reattach the backplane covers.

g. You have successfully corrected the problem. If more alarms exist on the frame, return to Procedure 9-1, "How to Clear Alarms," to determine the next corrective action to take.

28. Having arrived at this step because you did *not* observe cable problems in Step 23 or because you received the FAIL response in Step 25, call your system administrator or the next level of technical support to fix the cable. Note the number of this procedure and the number of the next step so that you can return to the correct location once the failed cable is repaired.

29. After the failed cable has been repaired by your system administrator or the next level of technical support, continue this procedure at Step 30.

30. At the craft interface terminal, verify that the problem has been corrected by entering:

    TEST-PATH-STS1::::PAINTGRT;

    The system responds with one of the following messages:

    — For *Message Set 1*:

    ```
      <TID #n YY-MM-DD HH:MM:SS>
    M  TEST PATH STS1::::PAINTGRT COMPLD
       /* EC1_IN,EC1_OUT:LOC,CHAN_OUT:LOC,CHAN_IN,
             CHAN_OUT:LOC,CHAN_IN:TAG:RESULT */
       " <EC1_IN,EC1_OUT:LOC,CHAN_OUT:LOC,CHAN_IN,
             CHAN_OUT:LOC,CHAN_IN:TAG:>PASS "
    ;
    ```

    — For *Message Set 2*:

    ```
      <TID YY-MM-DD HH:MM:SS>
    M  TEST PATH STS1::::PAINTGRT COMPLD
       " <EC1_IN,EC1_OUT:LOC,CHAN_OUT:LOC,CHAN_IN,
             CHAN_OUT:LOC,CHAN_IN:TAG:>PASS "
    ;
    ```

31. Verify that the system output is PASS. Having received the PASS response, perform the following steps:

    a. Check for one of the following autonomous messages from the list that appears:

    — For *Message Set 1*:

    ```
      <TID #n YY-MM-DD HH:MM:SS>
    A <ASEQ> REPT SW EQPT
       /* WORKING ENTITY,SWITCH DIRECTION */
       " <WORKING ENTITY>,WKG "
    ;
    ```

    — For *Message Set 2*:

    ```
      <TID YY-MM-DD HH:MM:SS>
    A <ASEQ> REPT SW EQPT
       " <WORKING ENTITY>,WKG "
    ;
    ```

where

WORKING ENTITY = the STS1IN circuit pack identified in Step 1

b. Verify that the STS1IN circuit pack identified in Step 1 no longer generates an alarm by entering the two commands that follow:

RTRV-ALM-EQPT::ALL::,PAINTGRT;

and

RTRV-PATH-STS1::ALL::PAINTGRT;

In both system responses, the STS1IN circuit pack identified in Step 1 should *not* appear in the message and the red LED should no longer be lighted.

c. At the craft interface terminal, switch the DS3SW to a working state by entering:

ALW-SW-EQPT::ELOC::WKG;

where

ELOC = the DS3SW circuit pack identified in Step 11, specified as DS3SW-{1 through 4}-{1 through 16}

d. Verify a successful switch to working of the DS3SW circuit pack by entering:

RTRV-STATE-EQPT::ELOC;

where

ELOC = the DS3SW circuit pack identified in Step 11

The system response should be one of the following messages:

— For *Message Set 1*:

```
  <TID #n YY-MM-DD HH:MM:SS>
M  RTRV STATE EQPT::<ELOC>::ALL COMPLD
   /* LOC:STATE */
   " <LOC>:ACT "
;
```

— For *Message Set 2*:

```
  <TID YY-MM-DD HH:MM:SS>
M  RTRV STATE EQPT::<ELOC>::ALL COMPLD
   " <LOC>:ACT "
;
```

where

LOC = the DS3SW circuit pack identified in Step 11

e. Since the original STS1IN and DS3SW circuit packs are not at fault, they can be put in the spares storage cabinet for future use.

f. Wearing an ESD wrist strap, reattach the backplane covers.

g. You have successfully corrected the problem. If more alarms exist on the frame, return to Procedure 9-1, "How to Clear Alarms," to determine the next corrective action to take.

Administrative Information

A

Contents

Customer Assistance	A-1
Documentation Orders	A-2
Product Orders	A-2
Equipment Returns	A-2

Administrative Information

A

This section contains administrative information that is useful for obtaining help in troubleshooting problems, ordering documentation and related products, and returning equipment.

Customer Assistance

Support for problems that cannot be resolved through the execution of the procedures contained in this document will vary according to each customers' established procedures for supporting individual DACS III-2000 systems. These procedures usually involve escalation within your own company support staff. For some problems it may be necessary for your support staff to obtain assistance from AT&T.

AT&T has been and continues to be committed to providing excellence in technical customer support for its products and services. AT&T has a hierarchical support structure ready and available to solve technical DACS III-2000 problems. When technical assistance is needed, the Regional Technical Assistance Center (RTAC) is the "first point of contact" into AT&T. RTAC engineers are highly trained and skilled at resolving DACS III-2000 operating and maintenance difficulties and are available 24 hours per day, 7 days a week.

When situations indicate the need for AT&T assistance, call RTAC as follows:

1 800 225-RTAC (1 800 225-7822)

(24 hours a day, 7 days per week)

By using RTAC as the entry point for AT&T support, you will be assured of timely and effective technical support services.

Documentation Orders

Documentation can be ordered through AT&T's Customer Information Center (CIC). The number to call is

Toll Free:	In the U.S.A.	1 800 432-6600
	In Canada	1 800 255-1242
Toll Call:	Worldwide	317 352-8557

Product Orders

Contact your Account Representative.

Equipment Returns

The procedure for returning equipment for repairs can be found in Chapter 3 of this document.

Product Description

B

Contents

DACS III-2000 System Overview B-1

Capacity, Growth, and Protection—
DACS III-2000 (1024) B-5

Capacity, Growth, and Protection—
DACS III-2000 (2048) B-8

Bays and Basic Modules B-11

Circuit Packs B-12

Main Controller (MC) Module B-13

- Main Controller (MC) Module Circuit Packs B-14
- Status Panel B-17
- System Interfaces and Internal Communication B-20
- Interface Connectors B-22
- Alarm Closure and Remote Reset Function Connector Panel B-25

Input Interface Module B-26

- Circuit Pack Descriptions B-26
- Circuit Pack Quantities B-30
- Circuit Pack Interfaces B-33

Switch Module B-33

- Switch Module—DACS III-2000 (1024) System B-34
- Switch Module—DACS III-2000 (2048) System B-36

Contents

Output Interface Module B-38
- Circuit Pack Descriptions—Output Interface Module B-38
- Circuit Pack Quantities B-42
- Circuit Pack Interfaces B-45

Switch Power (SW PWR) Module B-46
- Switch Power Module—DACS III-2000 (1024) B-46
- Switch Power Module—DACS III-2000 (2048) B-48

Power Feed to the System B-49
- Single Power Feed B-49
- Dual Power Feed B-50

Fuse and Alarm Panel B-54

Cooling B-54
- Cooling a DACS III-2000 (1024) System B-54
- Cooling a DACS III-2000 (2048) System B-54

Optional Hardware B-57
- BNC Interconnect Panel B-57
- Electromagnetic Interference (EMI) Shields B-57

Product Description

B

This appendix is intended for those who are new to the DACS III-2000 system and may need background information.

DACS III-2000 System Overview

The DACS III-2000 system is a high-capacity electronic broadband digital cross-connect system that is designed for efficient cross-connecting at the DS3 and STS-1 levels. It connects DS3 to DS3 signals and STS-1 to STS-1 signals, but cannot cross-connect different signal types to each other. The switch network is nonblocking and allows both one-way and two-way cross-connections. It can also bridge any existing cross-connection to multiple output ports *without affecting service.*

Multiple DACS III-2000 systems, located throughout your network, can be managed from a centralized location. Centrally managed functions include:

- rapid network restoration after a cable cut or other major service disruption
- remote surveillance of facilities
- provisioning
- maintenance
- testing

The DACS III-2000 system is available in two sizes: the 1024-size and the 2048-size. The minimum number of ports available for either size DACS III-2000 is 16. Because of the modular design of the DACS III-2000 system, you can increase each size in increments of 16 ports until you reach the maximum capacity, without

affecting service. The system can be used economically in small, medium, or large office applications. Initially, select the DACS III-2000 system size that will accommodate the maximum number of signals you expect to handle.

A brief description of each system size follows .

- 1024-size system

  The 1024-size system has a maximum capacity of 1,024 switch paths. It provides 960 bidirectional service ports, with the extra capacity reserved for protection if a circuit pack fails. The ports on a failed circuit pack switch to the reserved ports on a protection circuit pack. Figure B-1 shows a 1024-size system.

- 2048-size system

  The 2048-size system has a maximum capacity of 2,048 switch paths. It provides 1,920 bidirectional service ports, with the extra capacity reserved for protection if a circuit pack fails. The ports on a failed circuit pack switch to the reserved ports on a protection circuit pack. Figure B-2 shows a 2048-size system.

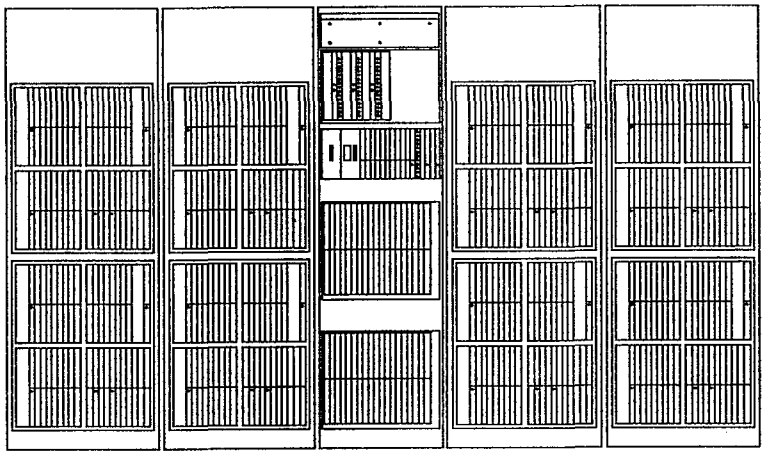

Figure B-1. DACS III-2000 (1024) System

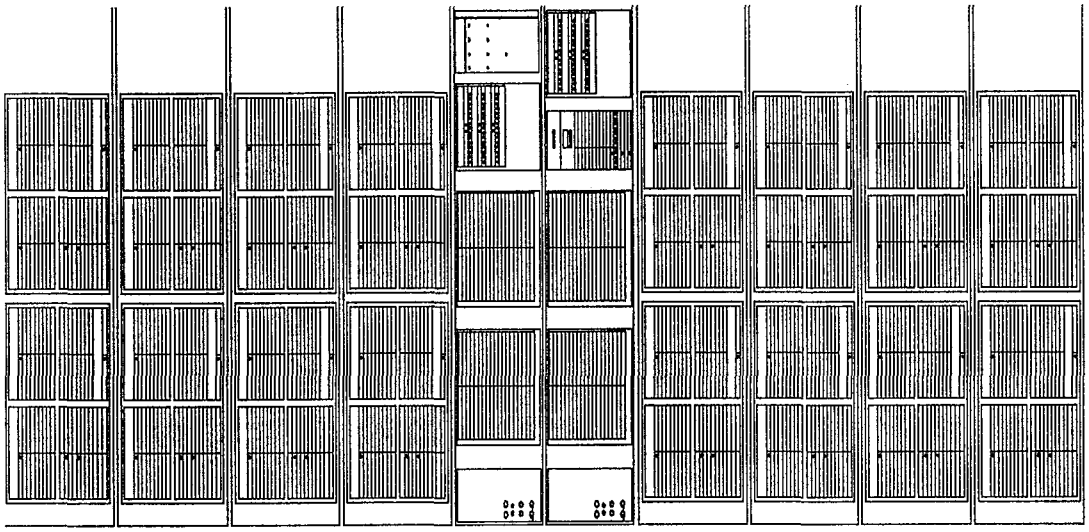

Figure B-2. DACS III-2000 (2048) System

The DACS III-2000 system has four basic parts that work together to perform the system's basic function of cross-connecting DS3 or STS-1 signals. The basic parts are

- the input signal interfaces
- a nonblocking switch network
- the output signal interfaces
- a microprocessor-based main controller module

The DACS III-2000 system takes an input signal and cross-connects it to an output signal. As Figure B-3 shows, the input signal enters the system at the input interface, then passes to the switch network where it is cross-connected to an output interface. The main controller module's function is to

- control the interfaces and the switch network
- maintain the system database and cross-connect maps
- provide the local and remote operations interfaces so that personnel and operations systems can communicate with the system

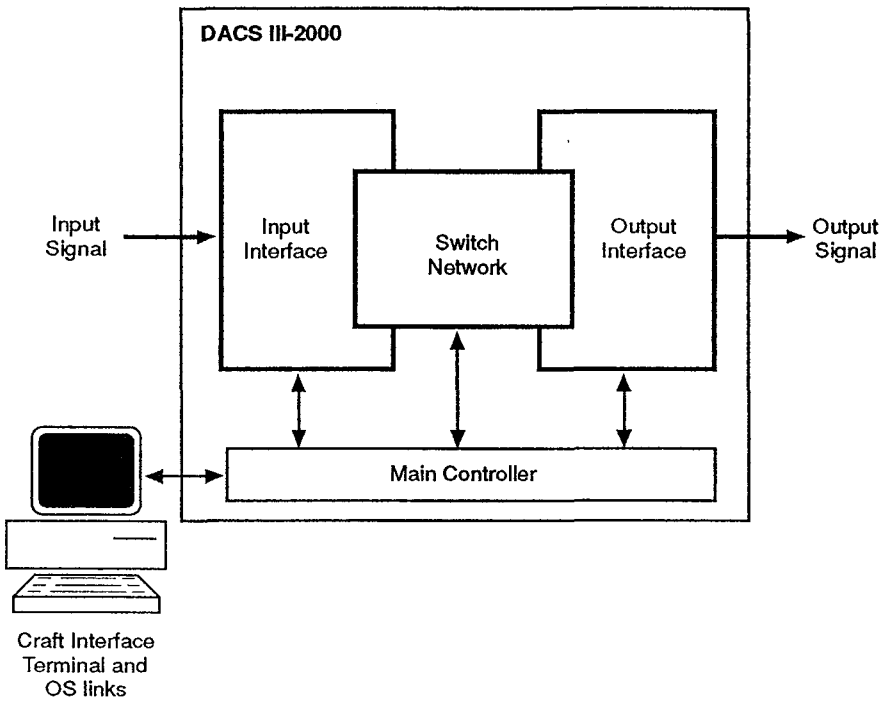

Figure B-3. DACS III-2000 Basic Parts

Capacity, Growth, and Protection—DACS III-2000 (1024)

The DACS III-2000 (1024) system has a maximum switch path capacity of 1,024 switch paths. It provides 960 bidirectional service ports, with the extra capacity reserved for protection if a circuit pack fails. Service through the ports on a failed circuit pack switches to the reserved ports on a protection circuit pack.

The minimum number of ports available for a DACS III-2000 (1024) system is 16. Figure B-4 shows a DACS III-2000 (1024) system in its minimum configuration.

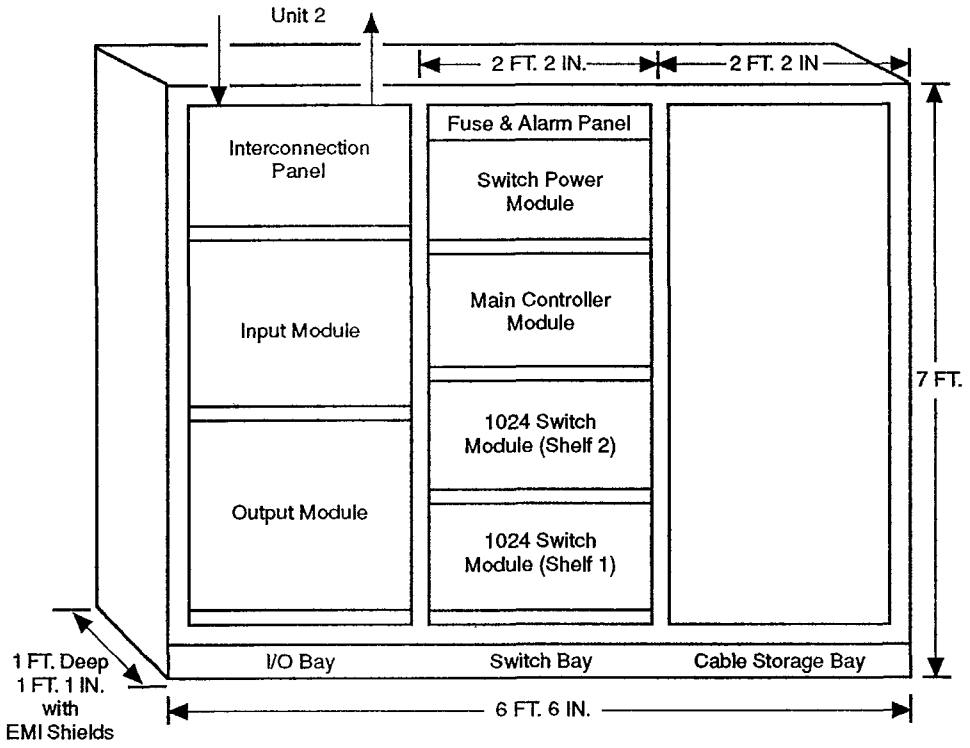

Figure B-4. DACS III-2000 (1024) System—Minimum Configuration

Because of the modular design of the DACS III-2000 system, you can increase the (1024) size in increments of 16 ports until you reach the maximum capacity. Figure B-5 shows a DACS III-2000 (1024) system at its maximum configuration.

If you choose to use the optional dual power feature on a DACS III-2000 EDSX system, each input/output bay powered by dual power units can handle up to 208 STS-1 signals, because of the extra power requirements of the STS-1 circuit packs.

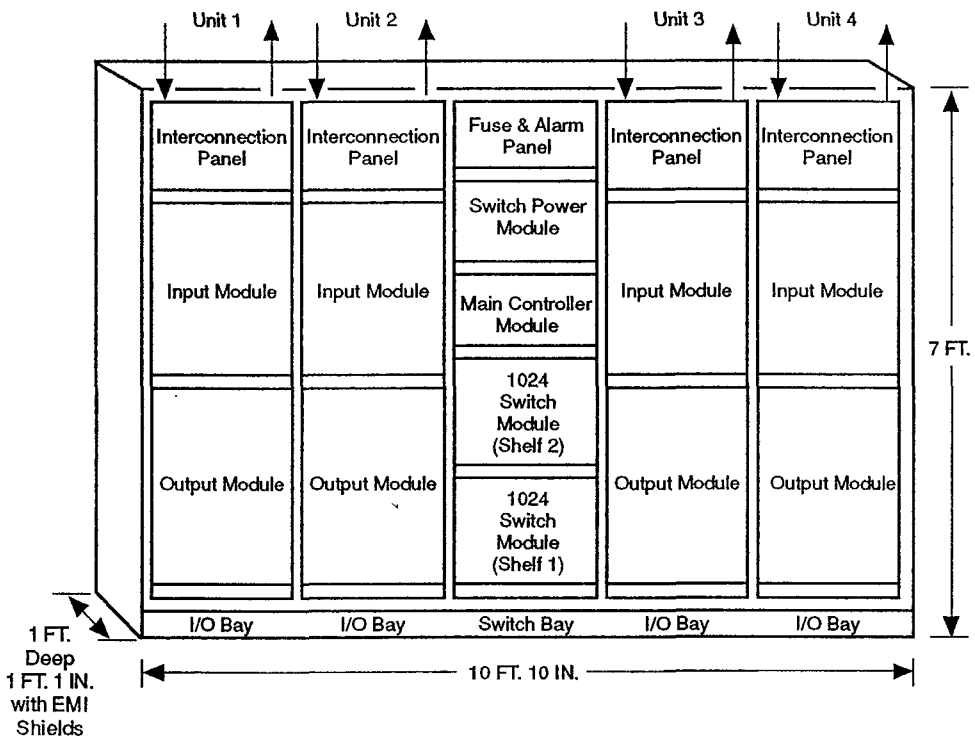

Figure B-5. DACS III-2000 (1024) System—Maximum Configuration

Protection ratios for each module in a DACS III-2000 (1024) system are shown in Table B-1.

Table B-1. Protection Ratios—DACS III-2000 (1024)

Module	Protection Ratio
1024 Switch Module	1 to 31
Input Interface Module	1 to 15*
Output Interface Module	1 to 15*

* The input interface module and the output interface module have two protection circuit packs. If one working circuit pack fails, both it and its mate circuit pack are protected.

Capacity, Growth, and Protection—DACS III-2000 (2048)

The DACS III-2000 (2048) system has a maximum switch path capacity of 2,048 switch paths. It provides 1,920 bidirectional service ports, with the extra capacity reserved for protection if a circuit pack fails. Service through the ports on a failed input/output (I/O) circuit pack switches to the reserved ports on a protection circuit pack.

The minimum number of ports available for a DACS III-2000 (2048) system is 16. Figure B-6 shows a DACS III-2000 (2048) system in its minimum configuration.

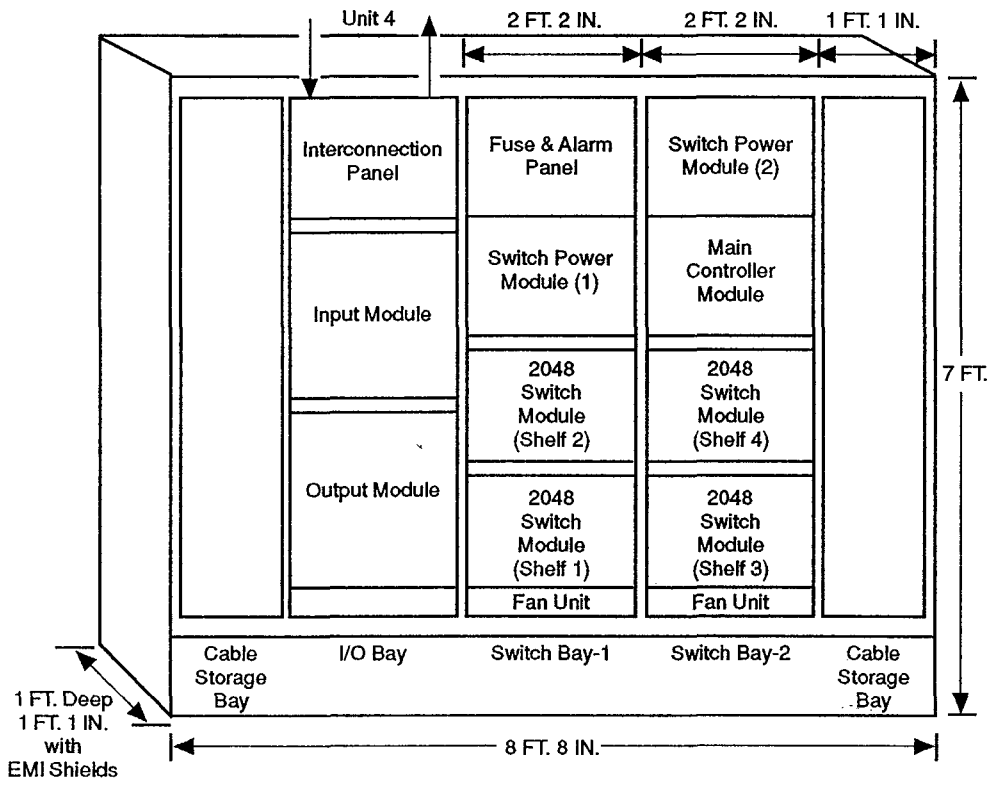

Figure B-6. DACS III-2000 (2048) System—Minimum Configuration

Because of the modular design of the DACS III-2000 system, you can increase the (2048) size in increments of 16 ports, without affecting service, until you reach the maximum capacity. Figure B-7 shows a DACS III-2000 (2048) system at its maximum configuration.

If you choose to use the optional dual power feature on a DACS III-2000 EDSX system, each input/output bay powered by dual power units can handle up to 208 STS-1 signals, because of the extra power requirements of the STS-1 circuit packs.

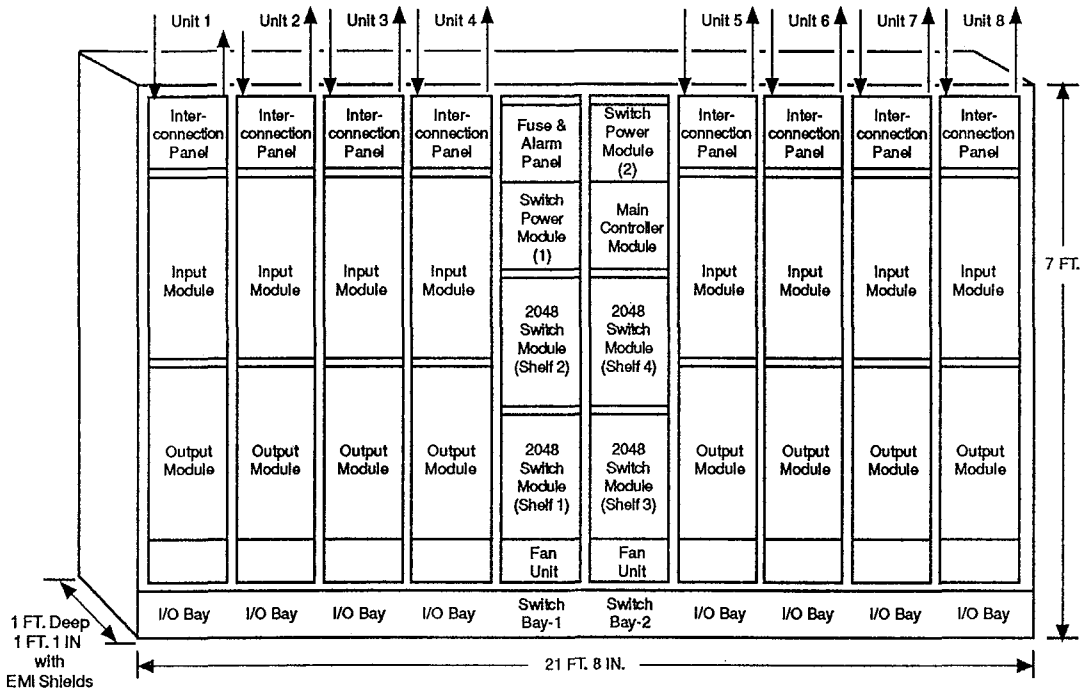

Figure B-7. DACS III-2000 (2048) System—Maximum Configuration

Protection ratios for each module in a DACS III-2000 (2048) system are shown in Table B-2.

Table B-2. Protection Ratios—DACS III-2000 (2048)

Module	Protection Ratio
2048 Size Switch Module	1 to 31
Input Interface Module	1 to 15*
Output Interface Module	1 to 15*

* The input interface module and the output interface module have two protection circuit packs. If one working circuit pack fails, both it and its mate circuit pack are protected.

Bays and Basic Modules

A "bay" is the framework structure into which the modules and equipment for a DACS III-2000 system is mounted. A "module" is a major group of circuit packs mounted together in a bay and appearing in all the bay arrangements.

Each input/output bay can be provisioned for either DS3 signals or STS-1 signals, but not both. DS3 switch bays switch both types of signals.

Table B-3 lists each bay and its contents.

Table B-3. Bays and Their Basic Modules and Equipment

Bay	Module and Equipment
Switch bay (1024)	fuse and alarm panel switch power (SW PWR) module main controller (MC) module one DS3 switch (DS3SW) module containing two shelves
Switch bay 1 (2048)	fuse and alarm panel switch power (SW PWR) module two shelves of DS3 switch (DS3SW) modules fan unit
Switch bay 2 (2048)	switch power (SW PWR) module main controller (MC) module two shelves of DS3 switch (DS3SW) modules fan unit
input/output (I/O) bay	interconnection panel input interface module (either DS3IN INTFC or STS1IN INTFC) output interface module (either DS3OUT INTFC or STS1OUT INTFC)
cable storage bay	cables for current and expanded service

The slots in many modules are numbered along the bottom to help identify the circuit pack location.

Circuit Packs

A "circuit pack" is the smallest building block in a DACS III-2000 system. Circuit packs are installed in modules; modules are installed in bays. Each circuit pack has a latch (to ensure its secure seating in the frame) and a red alarm LED (to aid in fault isolation).

Figure B-8 shows an example of a typical DACS III-2000 circuit pack

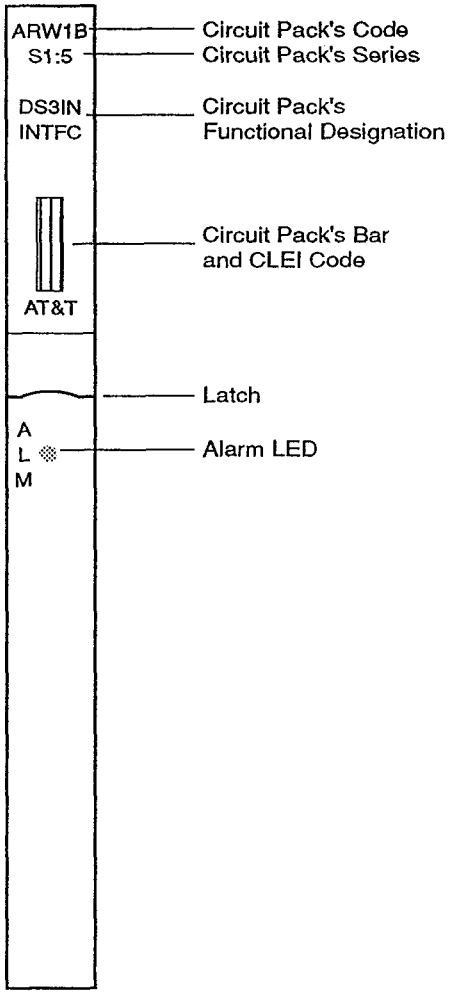

Figure B-8. Typical Circuit Pack

Main Controller (MC) Module

The heart of the DACS III-2000 is the main controller module. The main controller performs the following functions:

- monitors continuously the status of each module in the system
- performs user-specified functions
- coordinates the database management
- coordinates system maintenance
- performs background diagnostic testing
- switches service autonomously to a protection circuit pack if there is an equipment failure
- generates messages and reports

The main controller module components are discussed in the paragraphs that follow.

Main Controller (MC) Module Circuit Packs

Table B-4 lists each component in the main controller module, its abbreviation, and the quantity needed for the two different size systems.

Figure B-9 shows the main controller module located in the switch bay and identifies the position of each of the circuit packs.

Descriptions of the main controller module components follow the table and figure.

Table B-4. Main Controller (MC) Module Components

Component Name	Abbreviation	Quantity	
		1024	2048
PRI3 Circuit Pack	PRI3	1	1
SEC3 Circuit Pack	SEC3	1	1
Secondary Storage Controller	SSC3	1	1
Switch Communications Interface	SCI, SCI2, or SCI3	1	2
Maintenance Interface	MTC or MTC2	1	1
Unit Interface	UI	1	1
Central Processing Unit	CPU	1	1
Memory Expansion	MX2	1	1
Enhanced Communications Interface	ECI2 or ECI5	1	1
Power Circuit Pack B	PWRB	1	1
Fuse Board E	FBE	1	1
Power Circuit Pack C	PWRC	1	1
Power Circuit Pack D	PWRD	1	1
Status Panel	—	1	1

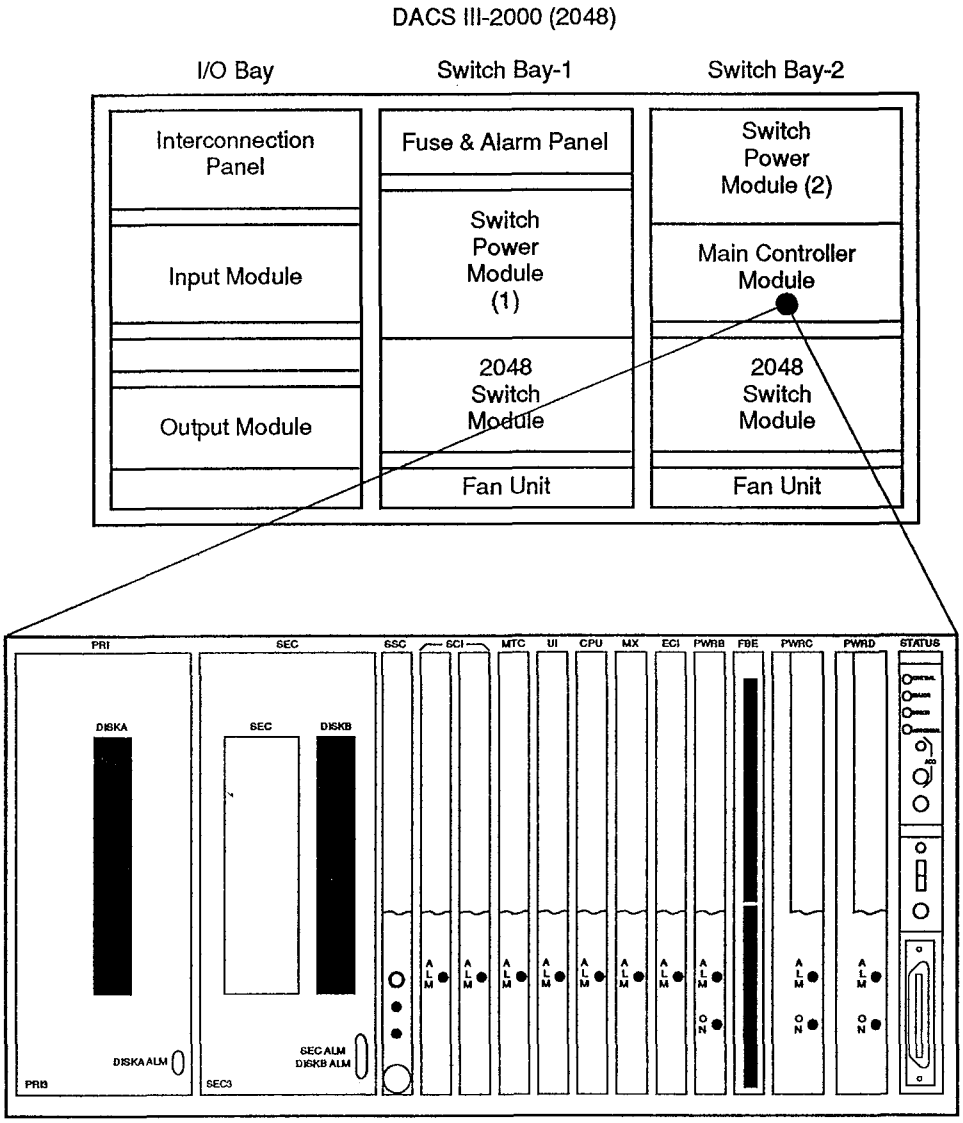

NOTE: DACS III-2000 (1024) contains an SCI, SCI2, or SCI3 in position 1 only. Position 2 contains a blank unit.

Figure B-9. Main Controller (MC) Module—DACS III-2000 (2048) System

Storage Devices and Controller

For a description and illustration of the secondary storage subsystem, see Appendix B, "Features and Benefits from Prior Releases."

Switch Communications Interface (SCI, SCI2, or SCI3)

The SCI, SCI2, and SCI3 circuit packs are functionally equivalent for the DACS III-2000 system. The SCI3 has improved parity diagnostics. The circuit pack provides the interface using a serial bus between the central processing unit (CPU) and the DS3 center stage switch circuit packs. The DACS III-2000 (1024) system has one SCI3; the DACS III-2000 (2048) system has two SCI3s. All new systems have the SCI3.

Maintenance Interface Circuit Pack (MTC or MTC2)

The MTC and MTC2 are functionally equivalent for the DACS III-2000 system. This circuit pack, along with the unit interface (UI), provides the internal local area network (LAN) distribution function for the unit controllers, ECI2, and the CPU. It also detects system errors and provides the contact closures required for the office alarms. (All new systems will have the MTC2 circuit pack.)

Unit Interface (UI)

The unit interface (UI), along with the MTC or MTC2, provides the local area network (LAN) distribution function for the unit controllers, enhanced communications interface, and the CPU. It also provides the error summary functions for the unit controllers.

Central Processing Unit (CPU)

The CPU controls and coordinates all DACS III-2000 system functions. It contains the microprocessor circuitry, 128 kB of read-only memory (ROM), and 2 MB of random access memory (RAM).

Memory Expansion (MX2)

The memory expansion (MX2) circuit Memory pack was introduced in Release 2.0 and replaced the MX of earlier software releases. The MX2 provides an additional 8 MB of RAM available to the CPU.

Enhanced Communications Interface (ECI2 or ECI5)

The ECI2 contains two synchronous and four asynchronous administrative links. These links allow operating personnel and OSs to communicate with the system. It has 2 MB more of RAM than the ECI circuit pack it replaced, for a total of 4 MB of RAM. The circuit pack also includes an internal clock that maintains the time and day, even after the system is reset.

The optional ECI5 can be used in place of the ECI2. The ECI5 is the same as the ECI2 except that the ECI5 provides a start-up firmware baud rate of 2400 for CI-LINK-2. All firmware messages are delivered at 2400 baud. For this baud rate to go into effect, CILINK-2 needs to be provisioned in the system software for 2400 baud, then the link needs to be restored. This software-provisioned baud rate is effective after the system has been reset.

Power Circuit Packs (PWRB, PWRC, and PWRD)

The three power circuit packs (PWRB, PWRC, and PWRD) provide power for the main controller module. They are dedicated to the main controller module and are not dependent on the other power supplies in the system.

Fuse Board (FBE)

The fuse board (FBE) provides fuses for the main controller module circuit packs.

Status Panel

The main controller module status panel provides a visual indication of problems within the system. The enhanced status panel, shipped with new systems, provides additional alarms (CRITICAL and Abnormal) and can be upgraded in the field. Release 4.0 can run with the original or enhanced status panel.

Figure B-10 shows the enhanced status panel with its indicators and manual controls. The indicators include the following LEDs:

CRITICAL	The CRITICAL alarm indicator is a red LED and signals a critical alarm condition. (This appears only on the enhanced status panel.)
MAJOR	The MAJOR alarm indicator is a red LED and signals a major alarm condition.
Minor	The Minor alarm indicator is a yellow LED and signals a minor alarm condition.

Abnormal	The Abnormal alarm indicator is a yellow LED and is reserved for future use. (This appears only on the enhanced status panel.
Alarm Cutoff (ACO) Indicator	The ACO indicator is a green LED and shows that the audible alarms have been silenced (ACO switch activated).
Main Controller Module FAILURE	This indicator is a red LED labeled FAILURE and signals a failure in the main controller module.

The optional Electromagnetic Interference (EMI) shields come with an additional status panel at the top of the switch bay. The EMI shield status panel includes indicators for PWR On, Critical, Major, Minor, and MC Failure, and a Lamp Test switch. See "Electromagnetic Interference (EMI) Shields" at the end of this chapter for more information.

The manual controls on the enhanced status panel include the following pushbutton or toggle switches:

- ACO Switch

  This switch silences the audible alarms for the DACS III-2000 system.

- LED TEST Switch

  This switch tests all LEDs except the 2048 fan units and the ACO LEDs, which have their own test switches.

- RESET and RESET ENABLE Switches

  The RESET switch starts the reset function when operated simultaneously with the RESET ENABLE switch. This combination allows the main controller module to be booted manually. Requiring simultaneous operation of the RESET and RESET ENABLE switches helps to prevent accidental operation of the reset function.

The status panel also has a TTY1 connector that allows the craft interface terminal to be used from the front of the frame (but see CAUTION). Six administrative link connectors (TTY1–TTY6) are located on the back of the MC module.

CAUTION:
Electrical damage.
Connecting terminals or G14 or G15 TTY adaptors to both the status panel TTY1 jack and the interface connector panel TTY1 jack will cause electrical damage to the enhanced communication interface (ECI2 or ECI5) circuit pack.
Never connect terminals or G14 or G15 TTY adaptors to both the TTY1 jack at the status panel and the interface connector panel TTY1 jack.

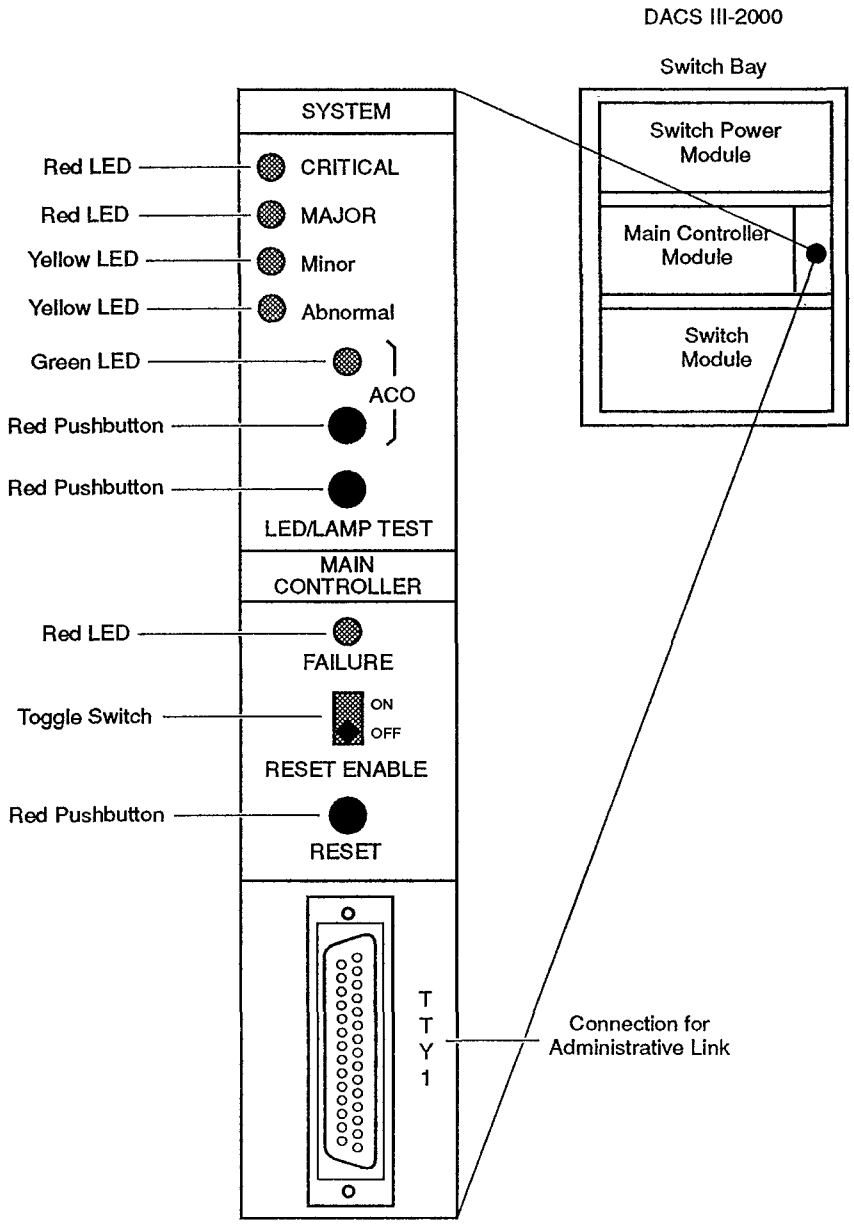

Figure B-10. Enhanced Status Panel

System Interfaces and Internal Communication

Figure B-11 shows a simplified block diagram of the main controller module, its circuit packs, and its interfaces with the system. The diagram also shows the internal communication within the main controller module represented by the following:

- local area network (LAN)

  The LAN carries messages between the central processing unit (CPU), enhanced communications interface (ECI2 or ECI5), and the unit controllers (UNIT CONTR3s) in the interface modules. The LAN interfaces with the UNIT CONTR3s through the maintenance (MTC or MTC2) circuit pack and the unit interface (UI) circuit pack.

- system bus

  The system bus allows the CPU to communicate with the MTC or MTC2, UI, secondary storage controller (SSC3), memory expansion (MX2), and switch communications interface (SCI, SCI2, or SCI3) circuit packs.

The power circuit packs for the main controller module plug into the module backplane and are independent of other system power circuit packs. The hard disk drives and optical drive connect to the main controller module via the SSC3 circuit pack. The main controller module backplane provides two connector fields to connect to the system unit controllers in the input and output interface modules and the DS3SW CTR circuit packs in the switch module. The main controller module also provides administrative links for terminals, office alarm systems, and OSs.

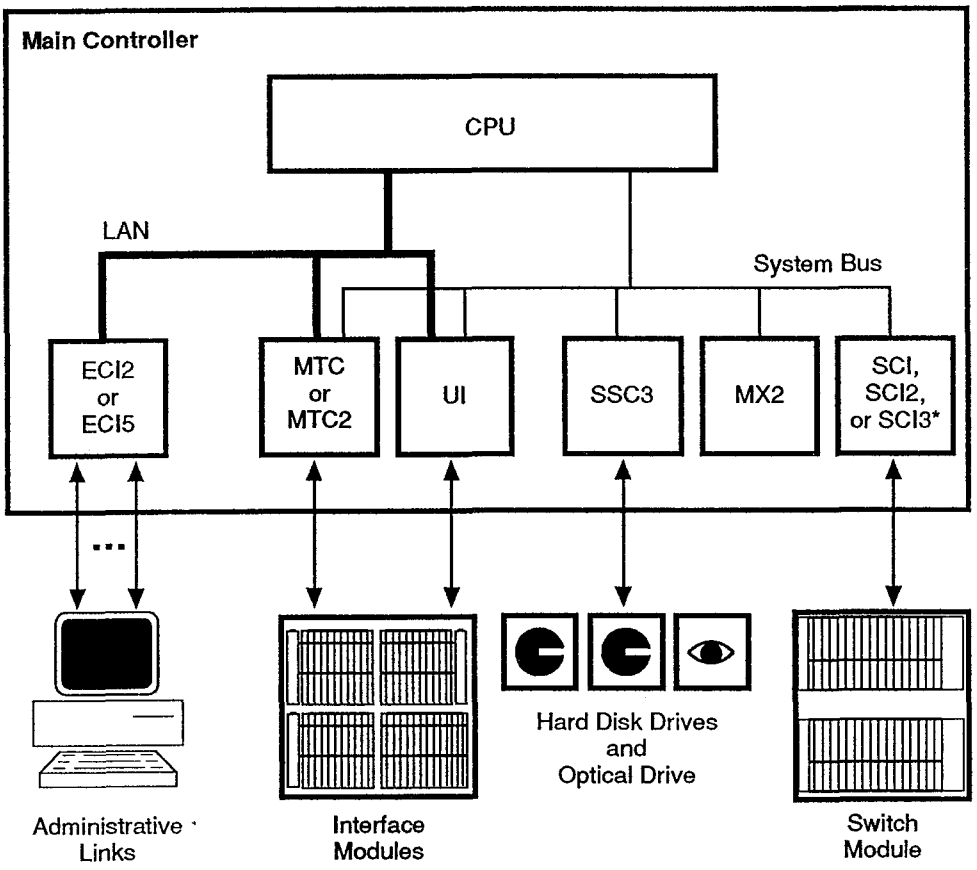

* The DACS III-2000 (2048) has two SCIs, SCI2s, or SCI3s.

Figure B-11. Main Controller—Functional Diagram

Interface Connectors

The DACS III-2000 system has six interface connectors for administrative links located on the back of the frame behind the main controller module. The interface connectors are labeled TTY1, TTY2, TTY3, TTY4, TTY5, and TTY6. TTY1 is duplicated at the front of the frame on the status panel (see CAUTION, earlier in this section).

The six connectors correspond with the six administrative links discussed in Table B-5.

Table B-5. Administrative Link Information

Link Numbers	Electrical Connection	Baud Rates	Protocol	Function
1, 2, and 3	RS-449/RS-423 convertible to RS-232 with an optional passive adaptor	300 to 9600	Asynchronous Snider/TL-1 (Transaction Language 1) compatible message set	Interfaces with local and remote craft interface terminals and OSs
4	RS-485	300 to 9600 (2400 recommended)	Asynchronous TABS/TBOS	Provides AS&C data to remote telemetry-based OSs
5 and 6	RS-449/RS-423	300 to 9600	Synchronous X.25/TL-1 X.25 protocol can provide up to four virtual circuits on each link	Provides remote craftperson and OS interface

Figure 5-9 shows the interface connector panel.

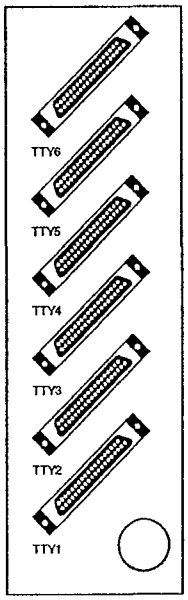

Figure B-12. Interface Connector Panel

TTY Adaptors

AT&T recommends that the AT&T G14 and G15 adaptors be used to improve system defensiveness. The G14 and G15 adaptors detect and allow the software to respond to an unterminated TTY link when:

- a cable is disconnected
- a terminal or printer is powered off
- a terminal or printer malfunctions (for example, a paper jam)

An advantage of the G14 and G15 adaptors over the G1 and G2 adaptors is that when the G1or G2 adaptors are used, craft must manually take the affected Snider link out-of-service in order to avoid slowed frame processing when cables are disconnected, equipment is powered off, or equipment malfunctions.

For Snider link 1, the G14 and G15 adaptors can be installed either at the front connector or the rear connector, but not both. In contrast, the G1 and G2 adaptors can be installed on both the front and rear connectors for Snider link 1.

Table 5-6 summarizes the use of the different adaptors and provides the equipment codes.

Table B-6. TTY Adaptors—Equipment Codes and Uses

Equipment Code	Use	Links
ED2C646-30, G14	Connecting less than 50 feet to a modem. Allows for detection of loss of clear-to-send, receive data, send timing, receive timing, and data mode/receiver ready when the cable is disconnected or the modem is powered off.	Snider links 1, 2, 3 X.25 links 5, 6
ED2C646-30, G15	Connecting to a local terminal/printer. Allows for detection of loss of clear-to-send, receive data, send timing, receive timing, and data mode/receiver ready when the cable is disconnected or the terminal/printer is powered off or malfunctions (for example, a paper jam).	Snider links 1, 2, 3
ED2C646-30, G1	Connecting to a modem (less than 50 feet).	Snider links 1, 2, 3
ED2C646-30, G2	Connecting to a local terminal/printer.	Snider links 1, 2, 3

Alarm Closure and Remote Reset Function Connector Panel

Figure B-13 shows the alarm closure and remote reset function connector. This wirewrap connector is located at the front of the frame in the switch bay, behind the top panel. It connects the system to both local and remote alarm and reset equipment.

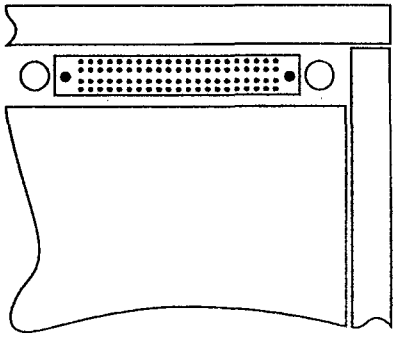

Figure B-13. Alarm Closure and Remote Reset Function Connector Panel

Input Interface Module

The input interface module provides an interface for the incoming signal facilities and contains the input stage of the three-stage switch. It terminates the input signal and passes the information to the switch center module to be cross-connected to an outgoing line. If an interface circuit pack in the module fails, the signals switch the failed circuit pack to a protection interface circuit pack to prevent loss of service.

An input interface module can be equipped and provisioned for either DS3 or STS-1 signals, but not both. The output module paired to it must also be equipped and provisioned for the same signal type. Signal types cannot be mixed within an input module or across a pair of input and output modules.

DS3 input interface modules and STS-1 input interface modules provide identical functionality, except for the signal type.

Circuit Pack Descriptions

An input interface module consists of the following circuit packs:

- unit controller (UNIT CONTR3)
- input interface circuit packs (either DS3IN INTFC or STS1IN INTFC)
- protection switch circuit packs (either DS3 PROTN SW or STS1 PROTN SW)
- protection interface circuit packs (either DS3IN PROTN INTFC or STS1IN PROTN INTFC)
- bus extender (BUS EXT) circuit packs
- power circuit packs
  - single power circuit pack (PWRA)
  - dual power circuit packs (PWRA2 and PWRA2 EXT)

Figure B-14 is a functional diagram of the module. The circuit packs are described in the paragraphs that follow. For a description of the power circuit packs, see "Power Feed to the System," later in this chapter.

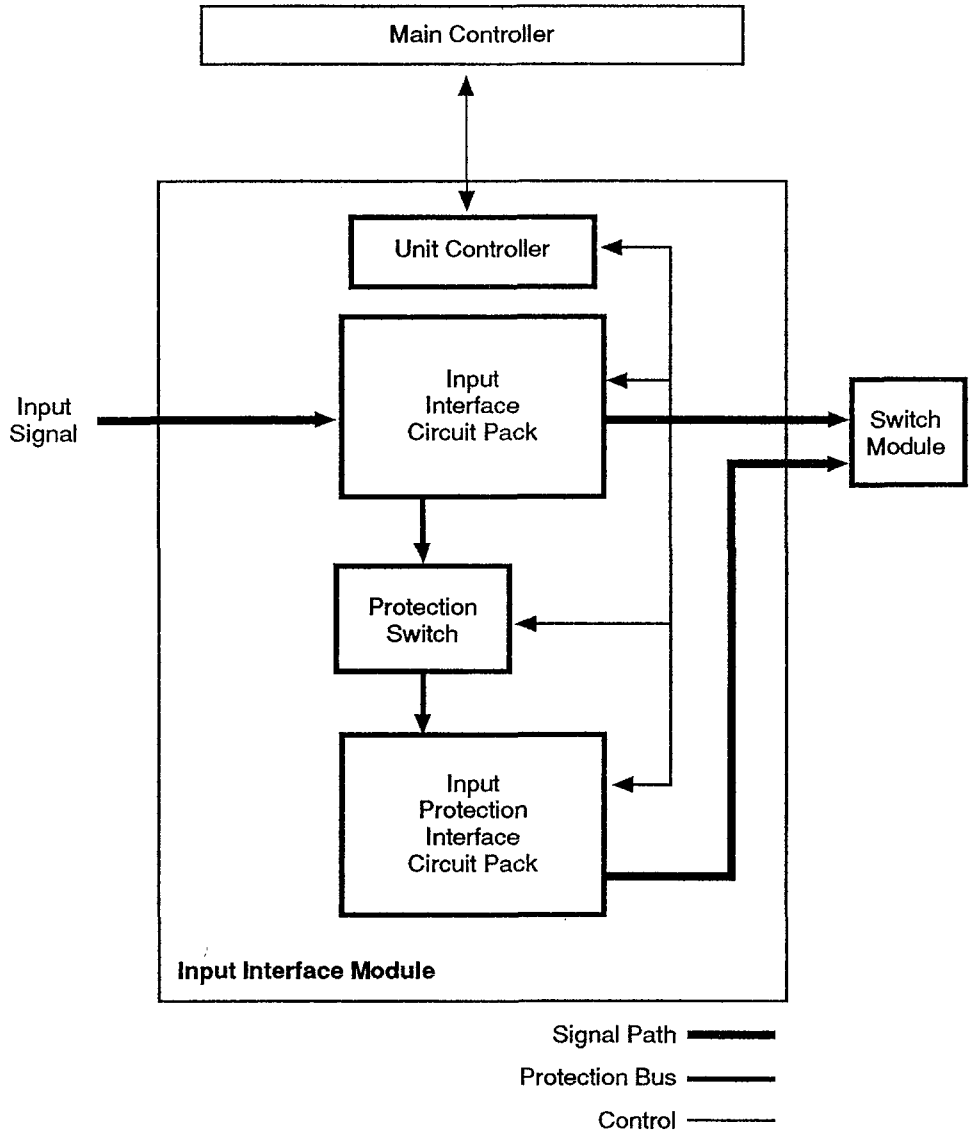

Figure B-14. Input Interface Module—Functional Diagram

Unit Controller (UNIT CONTR3)

The unit controller (UNIT CONTR3) communicates with the main controller module through a local area network and associated interrupt leads. It monitors the input interface hardware to detect and isolate faults and stores facility performance monitoring data. The software for the unit controller is downloaded from the disk through the main controller module.

Input Interface Circuit Packs

The circuit packs for DS3 input interface (DS3IN INTFC) and for STS-1 input interface (STS1IN INTFC) provide identical functionality, except for the signal type.

The input interface module can contain up to 30 input INTFC circuit packs. Each input INTFC circuit pack is mated with another input INTFC circuit pack for a maximum of 15 circuit pack pairs. Working together, these circuit packs perform two functions:

- interface with the incoming signals
- provide the first stage of the three-stage switch network in the DACS III-2000 system

Each circuit pack interfaces with eight incoming signals. The circuit pack checks the health of each signal, then converts it to an internal signal code.

This signal then goes to the input switch stage within the input INTFC circuit pack and is also cross-coupled to the switch stage of its mate input INTFC circuit pack. This switch stage can handle 16 inputs (eight of its own plus eight from its mate).

The switch then connects the signal to one of the 16 outputs that go to the center stage switch, the switch module. This ensures that each input signal has at least two paths to the switch module providing nonblocking operation for one-to-one connections. An additional output is reserved for internal monitoring and testing of incoming signals at the input INTFC circuit pack. An additional channel carries AIS.

When an input INTFC circuit pack fails, its signal and the signal for the mated input INTFC circuit pack are switched to spare input INTFC circuit packs called protection circuit packs.

Protection Switch Circuit Packs

The circuit packs for DS3 protection switch (DS3 PROTN SW) and for STS-1 protection switch (STS1 PROTN SW) provide identical functionality, except for the signal type.

Two protection switch circuit packs do the job of switching incoming signals to protection circuit packs when a failure occurs. The PROTN SW circuit packs are different from the protection circuit packs themselves. Each PROTN SW circuit pack generates an AIS for its signal type, which is autonomously inserted along a cross-connected path when there is a Loss-of-Signal or when the craftperson enters a command to insert AIS. DS3 PROTN SW inserts AIS, and STS1 PROTN SW inserts STS-1 Line-AIS.

Protection Interface Circuit Packs

The circuit packs for DS3 protection interface (DS3IN PROTN INTFC) and for STS-1 protection interface (STS1 PROTN INTFC) provide identical functionality, except for the signal type.

Two DS3 protection interface circuit packs provide the interface function for incoming signals switched around input INTFC circuit pack failures.

Bus Extender (BUS EXT) Circuit Packs

If the input interface module is not filled to capacity, then you must insert BUS EXT circuit packs into each input INTFC slot that is not equipped. The BUS EXT circuit packs provide continuity on the protection bus by establishing a path through the unoccupied slots.

Circuit Pack Quantities

An input interface module contains the same equipment for both a DACS III-2000 (1024) system and a DACS III-2000 (2048) system.

Table B-7 lists each circuit pack in an input interface module, its hardware name, and quantity needed per module.

Figure B-15 shows the circuit packs in a DS3IN interface module. Figure B-16 shows the circuit packs in an STS1IN interface module.

Table B-7. Input Interface Circuit Packs

Circuit Pack Name	Abbreviation	Quantity Per Module (applies to both system sizes)
Input Interface	DS3IN INTFC or STS1IN INTFC	2 to 30 of one type per module; types cannot be mixed
Bus Extender	BUS EXT	As required
Input Protection Interface	DS3IN PROTN INTFC or STS1IN PROTN INTFC	2 of one type per module; types cannot be mixed
Protection Switch	DS3 PROTN SW or STS1 PROTN SW	2 of one type per module; types cannot be mixed
Unit Controller 3	UNIT CONTR3	1 per module
Power Circuit Pack A (standard single power feed)	PWRA	3 per module
Power Circuit Pack A2 (optional dual power feed)	PWRA2	2 per module
Power Circuit Pack Extender (optional dual power feed)	PWRA2 EXT	1 per module

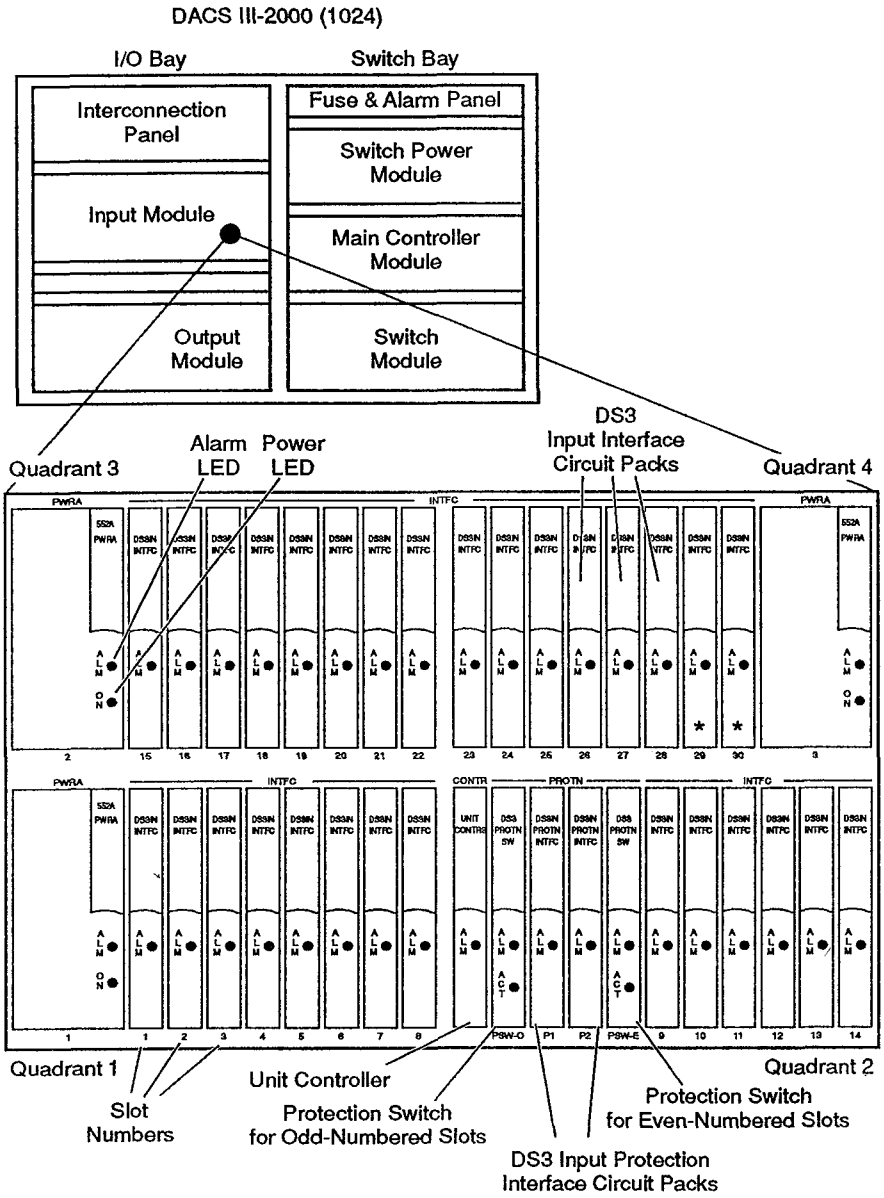

*If slots 29 and 30 of the corresponding DS3 output module contain AISDET circuit packs, then slots 29 and 30 of the DS3 input module will contain bus extender circuit packs.

Figure B-15. DS3IN Interface Module with Single Power Feed

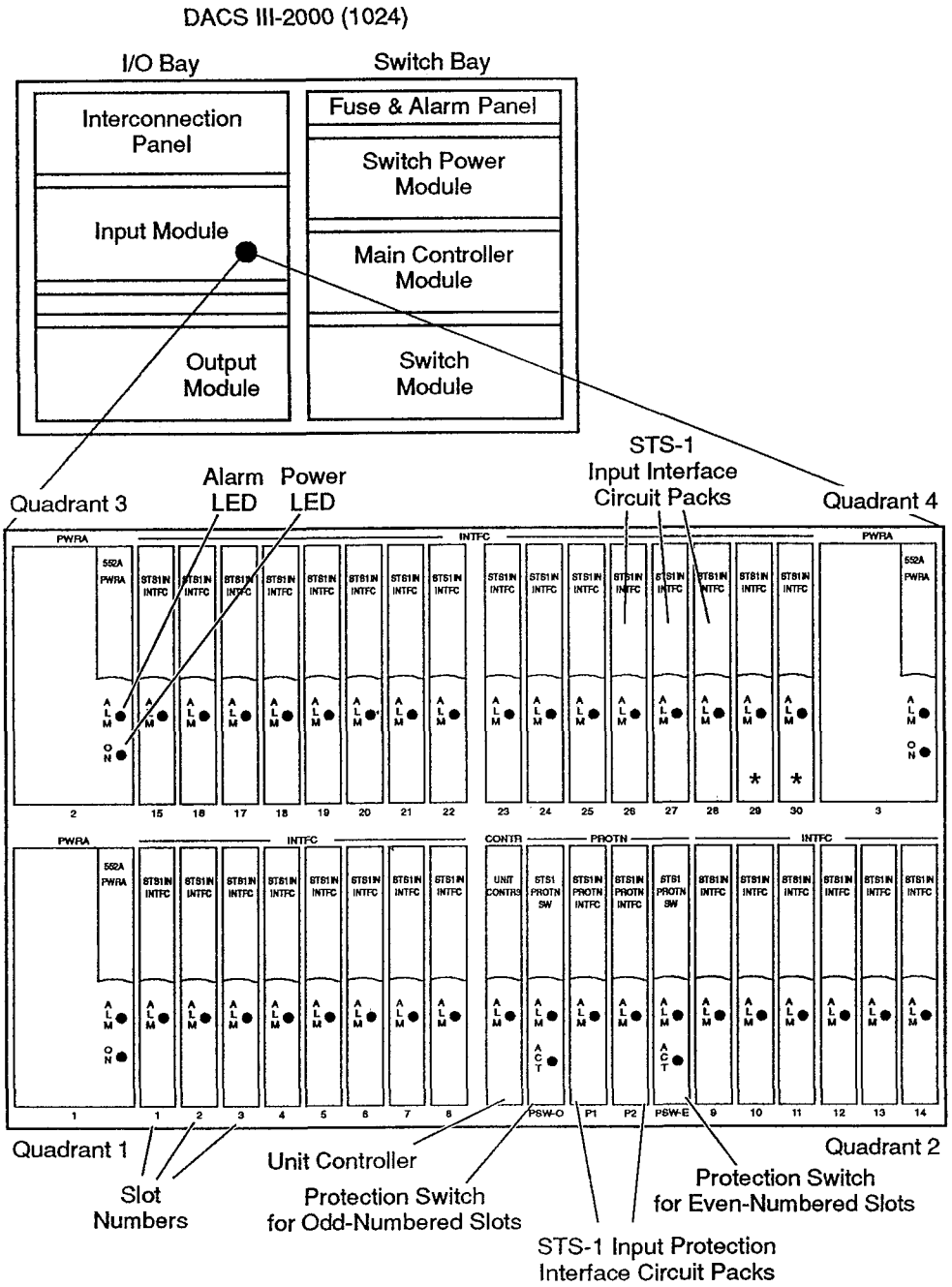

Figure B-16. STS1IN Interface Module with Single Power Feed

Circuit Pack Interfaces

Circuit pack interfaces are the same for DS3 and STS-1 circuit packs.

The UNIT CONTR3 interfaces to the main controller module using a 2-by-8 pin array on the module backplane. An input INTFC circuit pack has two dedicated pin fields on its backplane connectors: a 2-by-16 pin array for connecting to the switch modules (1,024 or 2,048 DS3s) and a 2-by-16 pin array for terminating eight signal coaxial cables.

A single input interface module filled to capacity has a 240 DS3 or STS-1 input capability. Four of these modules provide the full capacity for a DACS III-2000 (1024) system while eight modules provide the full capacity for a DACS III-2000 (2048) system. Any empty input INTFC slot must be filled with a bus extender (BUS EXT) circuit pack.

Switch Module

The switch module contains the center stage of the three-stage switch. This module receives the input signal from an input interface module and sends the cross-connected signal to an output interface module. It is connected to the input and output interface modules by the octopus cable attached to the backplane pin fields associated with each DS3SW CTR circuit pack. Eight 2-by-16 pin arrays per DS3SW CTR circuit pack are dedicated to this purpose.

The DS3SW CTR circuit packs in the switch module switch DS3 input to DS3 output and STS-1 input to STS-1 output, but do not mix or multiplex the different signal types.

Pin fields for the main controller module interface are also provided on the backplane. The protection resources provide a 1-to-31 protection ratio.

The switch module is under the direct control of the main controller module and comes in one of two sizes depending on the size of your DACS III-2000 system.

Figure B-17 shows a functional diagram of the switch module.

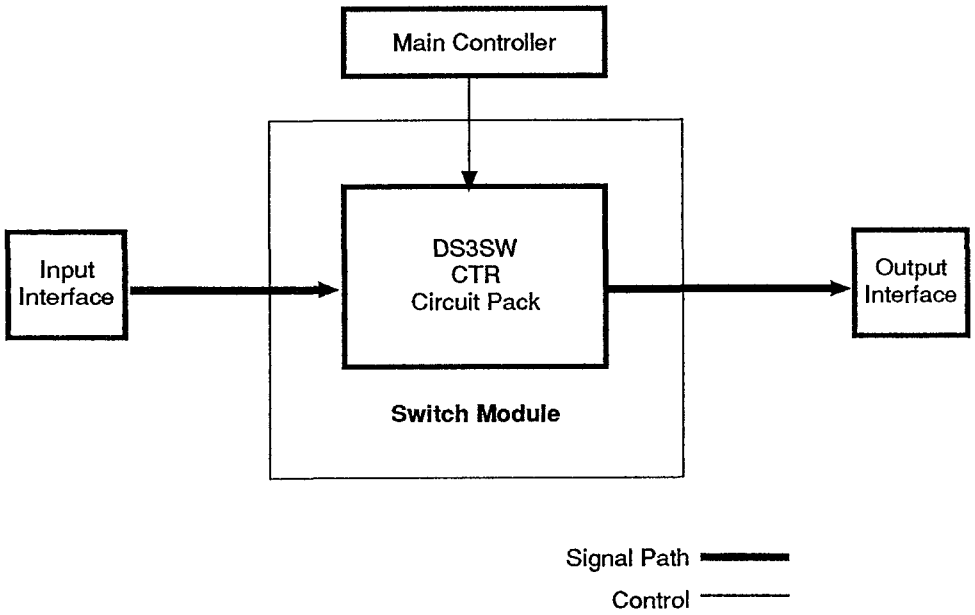

Figure B-17. Switch Module—Functional Diagram

Switch Module—DACS III-2000 (1024) System

The switch module on a DACS III-2000 (1024) system has 1,024 possible switch paths. The module contains thirty-two 64-by-64 DS3SW CTR circuit packs on two single shelves that are cabled together.

Circuit pack 16 in shelf 1 provides protection for the module. Power and ground lugs connect the module to the PWRA power circuit pack in the SW PWR module.

Figure B-18 shows the switch module of a DACS III-2000 (1024) system.

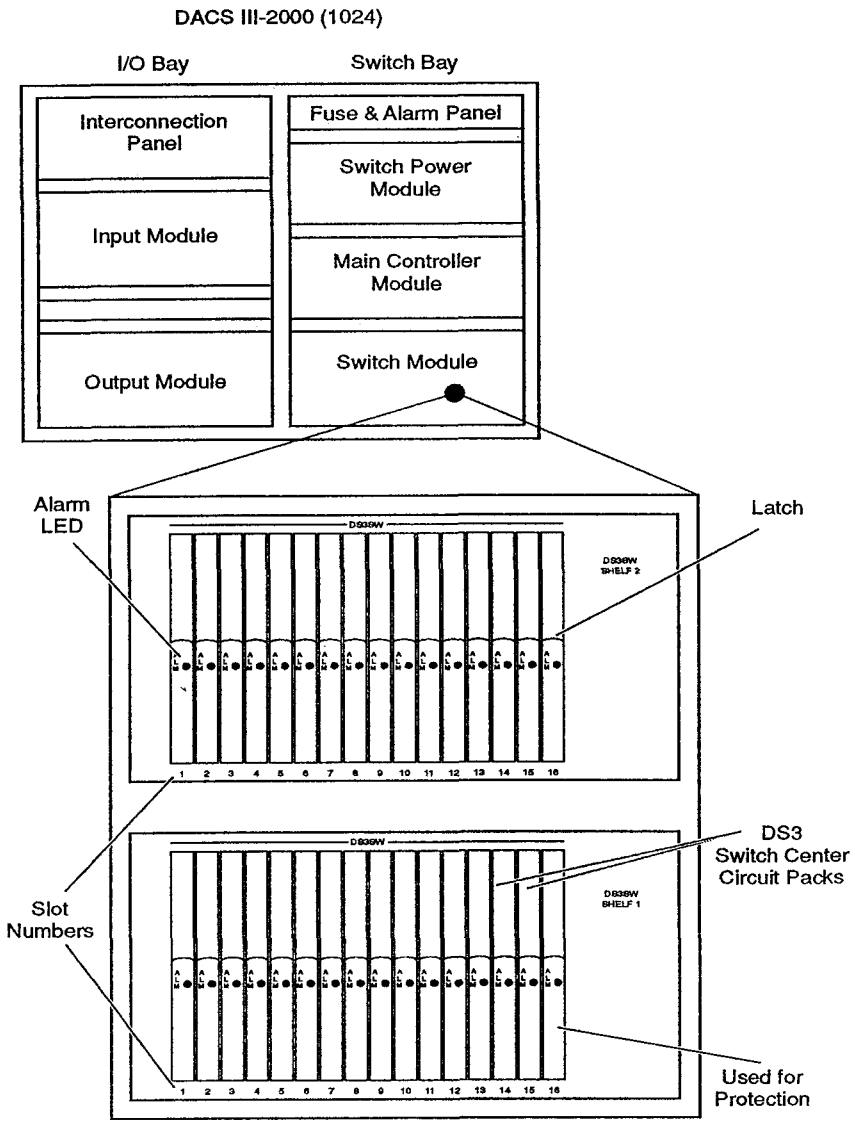

Figure B-18. Switch Module—DACS III-2000 (1024) System

Switch Module—DACS III-2000 (2048) System

The switch module on a DACS III-2000 (2048) system has 2,048 possible switch paths. The switch module is composed of four separate shelves, cabled together with two shelves in each of the two switch bays. Each shelf of the switch module contains sixteen circuit packs that are treated as eight pairs of mated packs. Two mated circuit packs, each containing a 128-by-64 switch, are cross-coupled to make a 128-by-128 switch. The two mated circuit packs are protection switched together. The switch module contains a total of thirty-two 128-by-128 center stage switches.

Circuit packs 15 and 16 in shelf 4 provide protection for the 2048 switch. Power and ground lugs connect the module to the power circuit packs in the SW PWR modules.

Figure B-19 shows the switch module of a DACS III-2000 (2048)

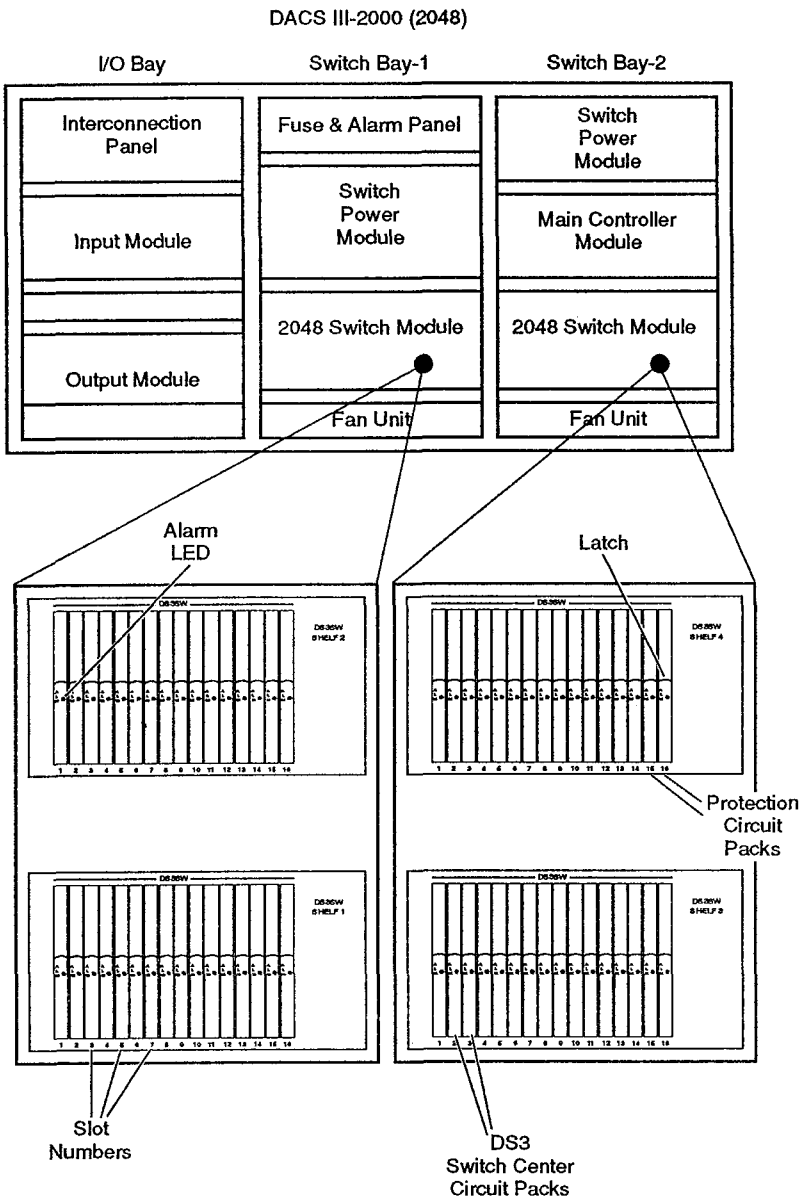

Figure B-19. Switch Module—DACS III-2000 (2048) System

Output Interface Module

The output interface module provides an interface for the outgoing facilities and contains the outgoing stage of the three-stage switch. This module receives signals from the switch module and connects them to an outgoing line. If an interface circuit pack in the module fails, the signal from the switch module is sent to the protection interface circuit pack to prevent loss of service. This output interface circuit pack then sends the signal to the output line.

An output interface module can be equipped and provisioned for either DS3 or STS-1 signals, but not both. The output module paired to it must also be equipped and provisioned for the same signal type. Signal types cannot be mixed within an output module or across a pair of input and output modules.

DS3 output interface modules and STS-1 output interface modules provide identical functionality, except for the signal type and that alarm indication signal detection is not provided for STS-1 modules.

Circuit Pack Descriptions—Output Interface Module

The output interface module consists of the following circuit packs:

- unit controller (UNIT CONTR3)
- output interface circuit packs (either DS3OUT INTFC or STS1OUT INTFC)
- protection switch circuit packs (either DS3 PROTN SW or STS1 PROTN SW)
- bus extender (BUS EXT) circuit packs
- power circuit packs
  - single power circuit pack (PWRA)
  - dual power circuit packs (PWRA2 and PWRA2 EXT)

Figure B-20 is a functional diagram of the module. The circuit packs are described in the paragraphs that follow. For a description of the power circuit packs, see "Power Feed to the System," later in this chapter.

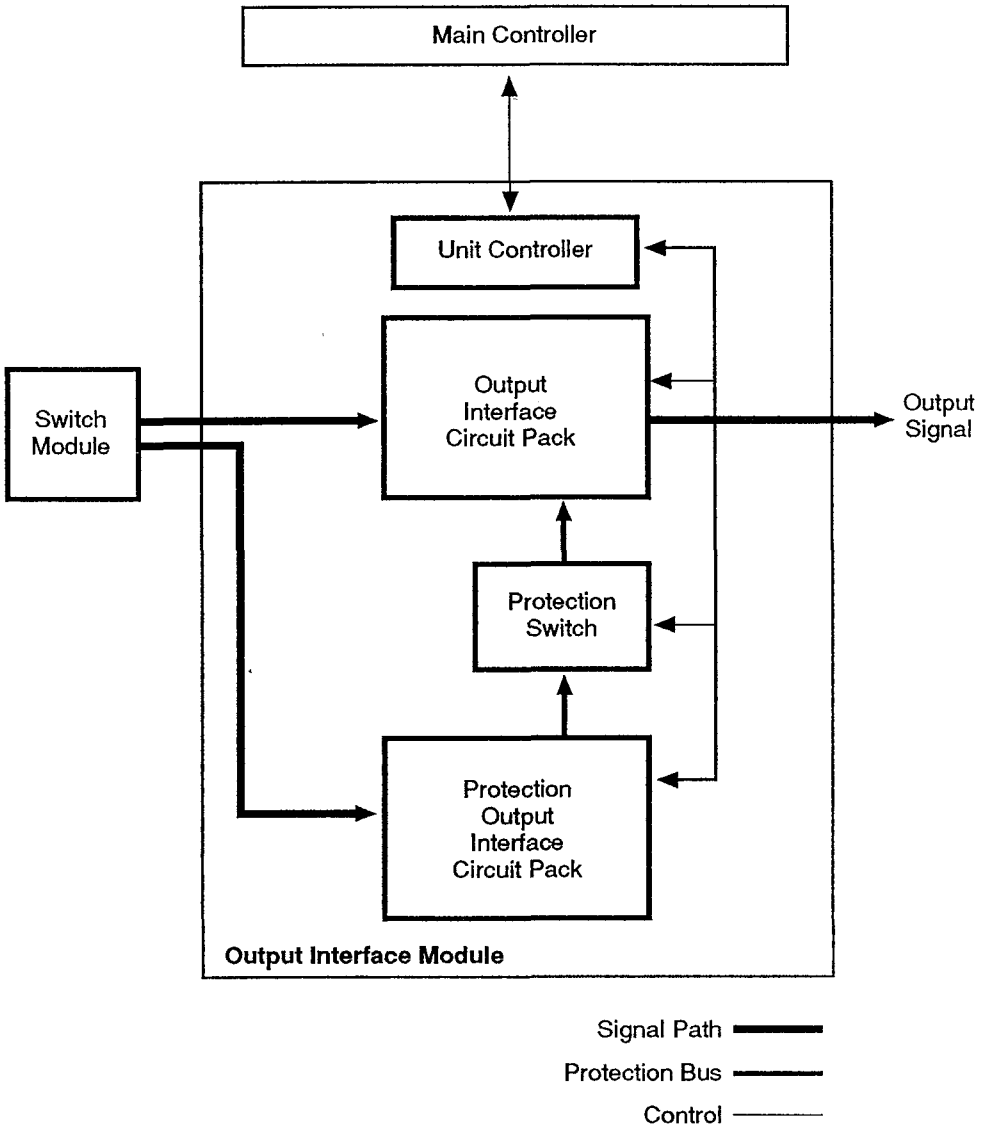

Figure B-20. Output Interface Module—Functional Diagram

Unit Controller (UNIT CONTR3)

The unit controller (UNIT CONTR3) communicates with the main controller module through a local area network and associated interrupt leads. It monitors the output interface hardware to detect and isolate faults. The software for the unit controller is downloaded from the disk through the main controller module.

Output Interface Circuit Packs

The circuit packs for DS3 output interface (DS3OUT INTFC) and for STS-1 output interface (STS1OUT INTFC) provide identical functionality, except for the signal type.

The output interface module can contain up to 32 output interface circuit packs: 30 working interface circuit packs and two protection interface circuit packs. Each output INTFC circuit pack is mated to another output INTFC circuit pack for a maximum of 15 circuit pack pairs. Working together, these circuit packs perform two functions:

- provide the third (output) stage of the three-stage switch network in the DACS III-2000 system
- interface with the outgoing lines

Each circuit pack receives 32 channels from the switch module (16 channels of its own and 16 channels that also go to its mate). An additional channel carries an IDLE signal, if needed. Signals on these channels are then switched to one of eight lines and converted back into DS3 or STS-1 format, as appropriate for the type of circuit pack. If needed, the circuit pack can be set to insert line buildout (LBO) and to send the signal to the outgoing line. When a output INTFC circuit pack fails, its signal and the signal for the mated output INTFC circuit pack are switched to spare output INTFC circuit packs located in the module's protection slots.

Protection Switch Circuit Packs

The circuit packs for DS3 protection switch (DS3 PROTN SW) and for STS-1 protection switch (STS1 PROTN SW) provide identical functionality, except for the signal type.

Two protection switch circuit packs switch outgoing signals to spare protection interface circuit packs when a failure occurs. Each PROTN SW circuit pack generates an IDLE signal for its signal type when an output port is not cross-connected or when the craftperson enters a command to generate an IDLE signal.

Bus Extender (BUS EXT) Circuit Packs

If the output interface module is not filled to capacity, BUS EXT circuit packs must be inserted into each output INTFC slot that is not equipped. The BUS EXT circuit packs provide continuity on the protection bus by establishing a path through the unoccupied slots.

DS3 AIS Detection (AISDET) Circuit Packs (optional)

A DS3 output interface module provisioned for the DS3 AIS Detection feature will have two AISDET circuit packs in slots 29 and 30. These circuit packs scan each incoming DS3 in the corresponding DS3IN interface module on a rotating basis (16 DS3s at a time). If an incoming AIS, Loss-of-Frame (LOF), or IDLE condition is detected, the system alerts the necessary personnel over the alarm telemetry and administrative links.

AISDET circuit packs are not available for STS-1.

Circuit Pack Quantities

An output interface module contains the same equipment for both a DACS III-2000 (1024) system and a DACS III-2000 (2048) system.

Table B-8 lists each circuit pack in the output interface module, its hardware name, and quantity needed per module.

Figure B-21 shows the circuit packs in a DS3OUT interface module. Figure B-22 shows the circuit packs in an STS1OUT interface module.

Table B-8. Output Interface Circuit Packs

Circuit Pack Name	Abbreviation	Quantity Per Module (applies to both system sizes)
Output Interface (two output INTFC circuit packs serve as protection interfaces in positions **P1** and **P2**)	DS3OUT INTFC or STS1OUT INTFC	4 to 32 per module
Bus Extender	BUS EXT	As required
Protection Switch	DS3 PROTN SW or STS1 PROTN SW	2 per module
Unit Controller 3	UNIT CONTR3	1 per module
DS3 AIS Detection Circuit Packs (optional)	AISDET	2 per module for DS3OUT module only
Power Circuit Pack A (standard single power feed)	PWRA	3 per module
Power Circuit Pack A2 (optional dual power feed)	PWRA2	2 per module
Power Circuit Pack Extender (optional dual power feed)	PWRA2 EXT	1 per module

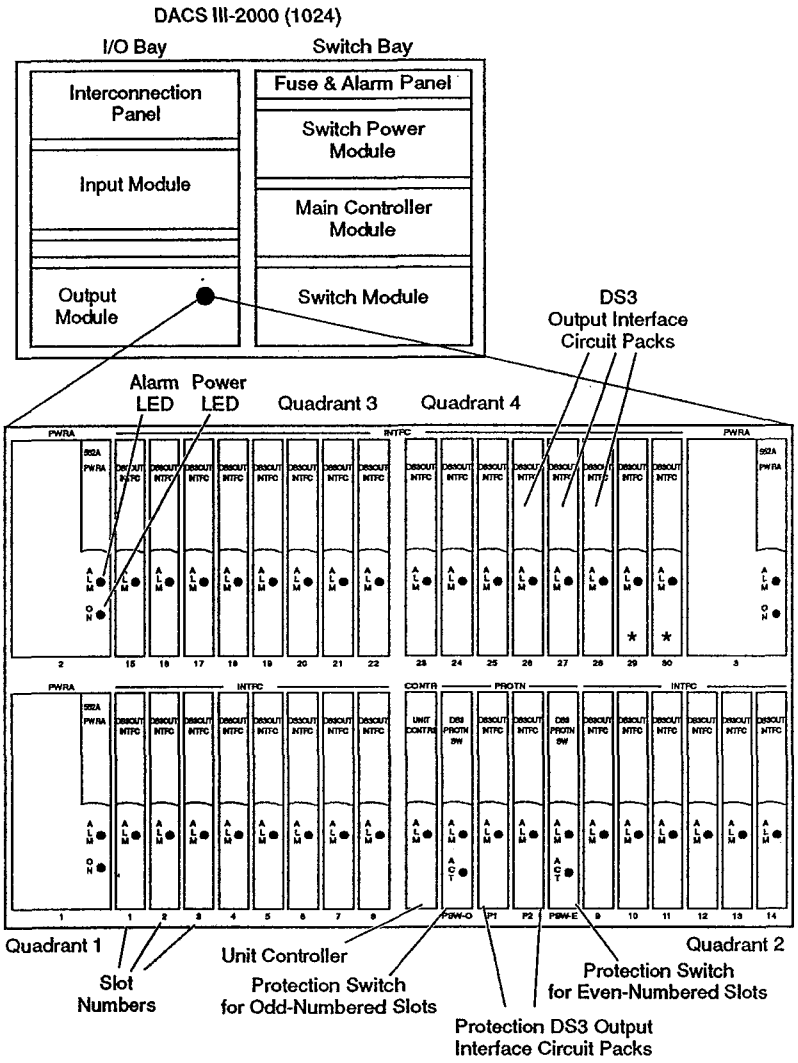

*If the unit is provisioned for the Alarm Indication Signal (AIS) detection feature, slots 29 and 30 will contain AISDET circuit packs. Also, slots 29 and 30 in the DS3 input module will contain bus extender circuit packs.

Figure B-21. DS3OUT Interface Module with Single Power Feed

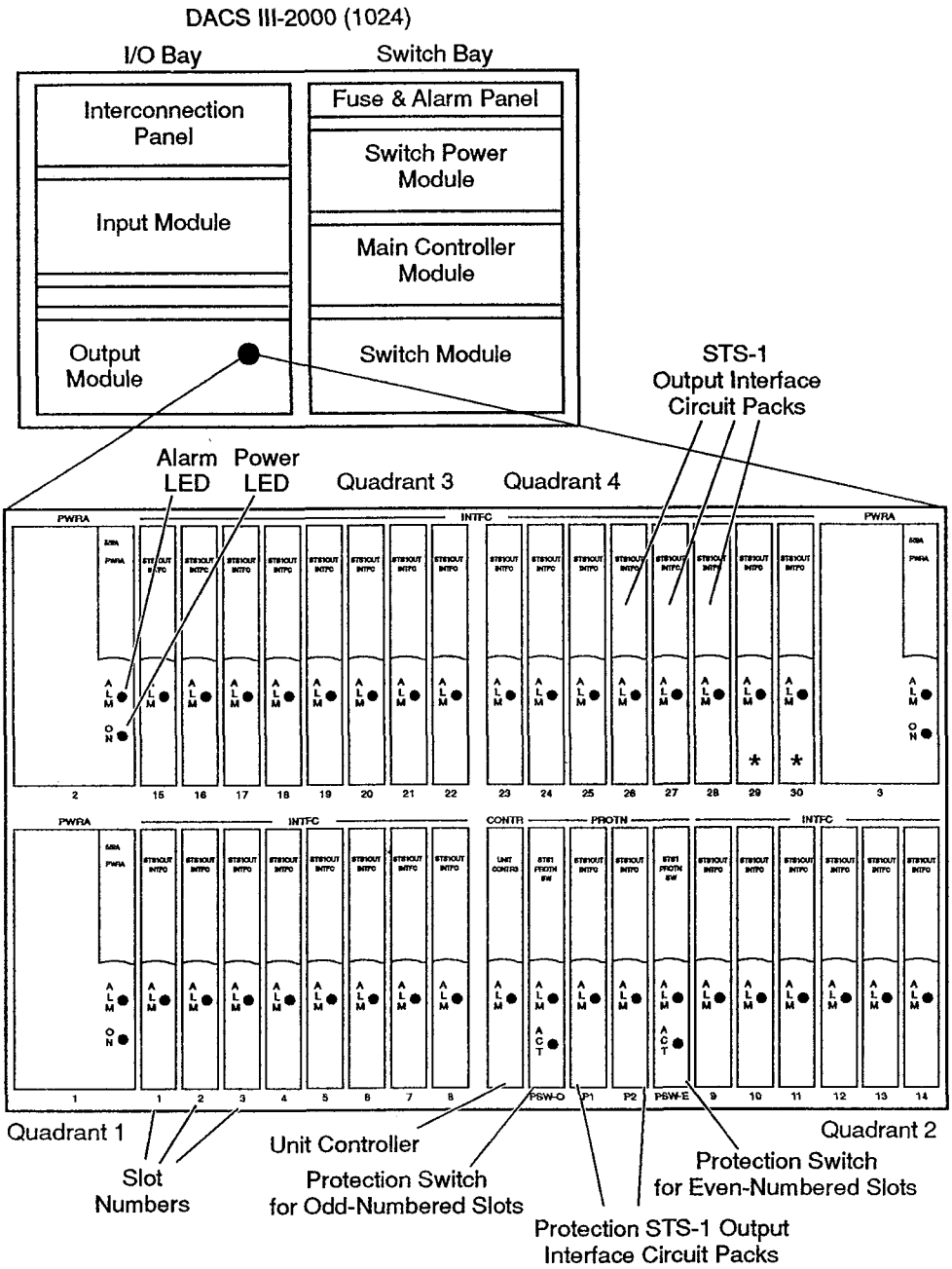

Figure B-22. STS1OUT Interface Module with Single Power Feed

Circuit Pack Interfaces

The unit controller (UNIT CONTR3) interfaces to the main controller (MC) module using a 2-by-8 pin array on the module backplane. The output INTFC circuit packs have two dedicated pin fields on their backplane connectors: a 2-by-16 pin array for connecting to the switch modules (1,024 or 2,048 DS3s) and a 2-by-16 pin array for terminating eight signal coaxial cables.

A single output interface module filled to capacity has a 240 DS3 or STS-1 output capability. Four of these modules provide the full capacity for a DACS III-2000 (1024) system while eight modules provide the full capacity for a DACS III-2000 (2048) system.

Circuit pack interfaces are the same for DS3 and STS-1 circuit packs.

If a DS3 output interface module is provisioned for the DS3 AIS detection feature, then slots 29 and 30 will contain AISDET circuit packs. When slots 29 and 30 contain AISDET circuit packs, slots 29 and 30 in the corresponding DS3IN INTFC module must contain BUS EXT circuit packs. Any empty DS3IN INTFC slot must be filled with a bus extender (BUS EXT) circuit pack. AISDET circuit packs are not available for STS-1.

Switch Power (SW PWR) Module

The switch power (SW PWR) module provides the power and fusing for the switch module. Table 5-9 lists the number of modules required for each system and the circuit packs in the modules.

Table B-9. Switch Power Module and Circuit Packs

Module or Circuit Pack Name	Abbreviation	Quantity	
		1024	2048
Switch Power Module	SW PWR	1 per system	2 per system
Power Circuit Pack A (standard single power feed)	PWRA	3 per module	4 per module
Power Circuit Pack A2 (optional dual power feed)	PWRA2	2 per module	2 per module
Power Circuit Pack Extender (optional dual power feed)	PWRA2 EXT	1 per module	1 per module
Fuse Board A Circuit Pack	FBA	1 per module	1 per module
Fuse Board B Circuit Pack	FBB	2 per module	2 per module

Switch Power Module—DACS III-2000 (1024)

The SW PWR module for the DACS III-2000 (1024) system provides a shelf for three PWRA power circuit packs and associated fuse boards. These PWRA power circuit packs provide power for the switch modules.

Figure B-23 shows the switch power module of a DACS III-2000 (1024) system with single power feed.

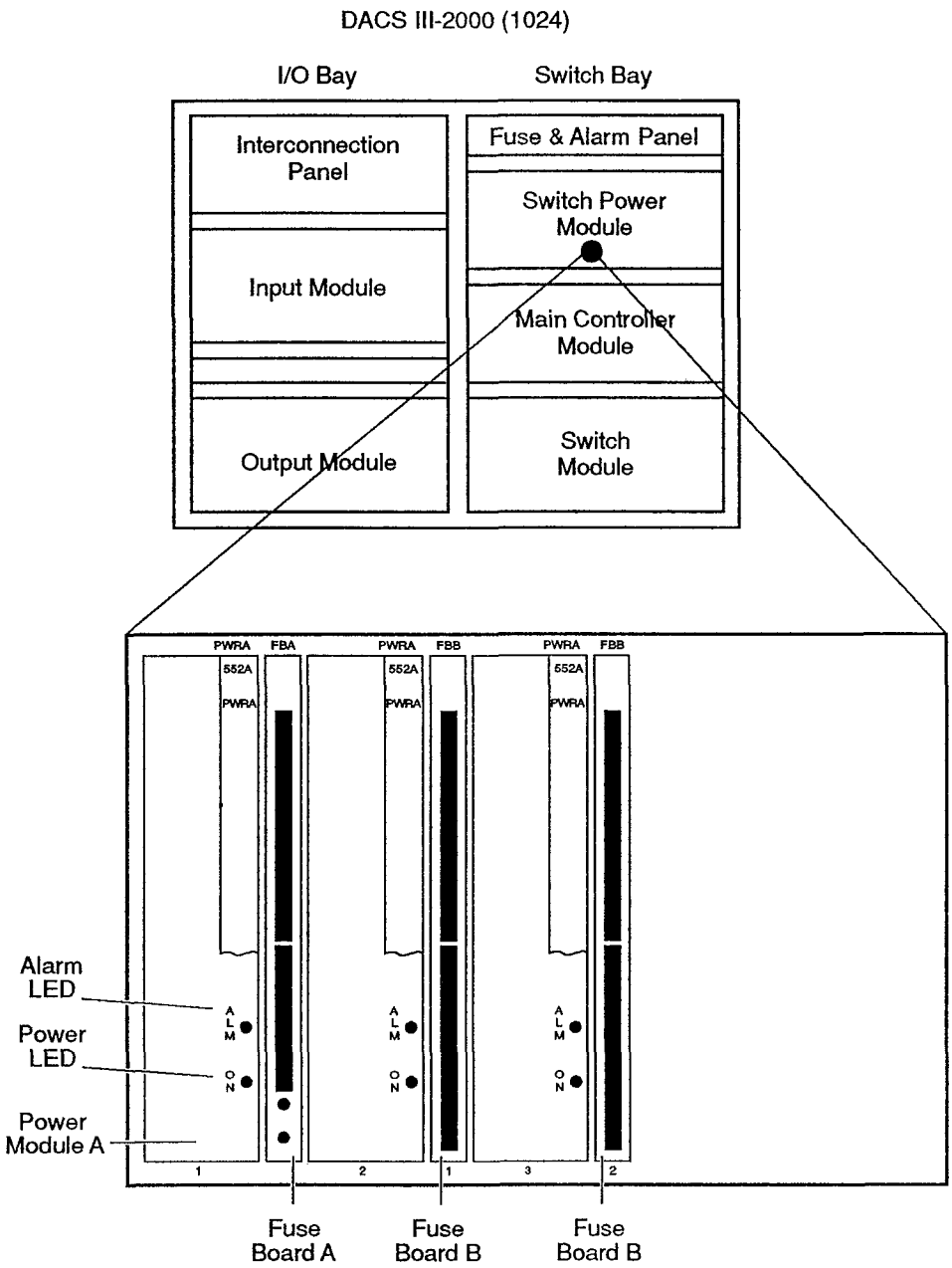

Figure B-23. SW PWR Module—DACS III-2000 (1024)—Single Power Feed

Switch Power Module—DACS III-2000 (2048)

The DACS III-2000 (2048) system contains two power modules. Each power module contains four PWRA power circuit packs and the associated fuse boards. The PWRA power circuit packs provide power for the switch modules.

Figure B-24 shows one of the DACS III-2000 (2048) SW PWR modules with single power feed.

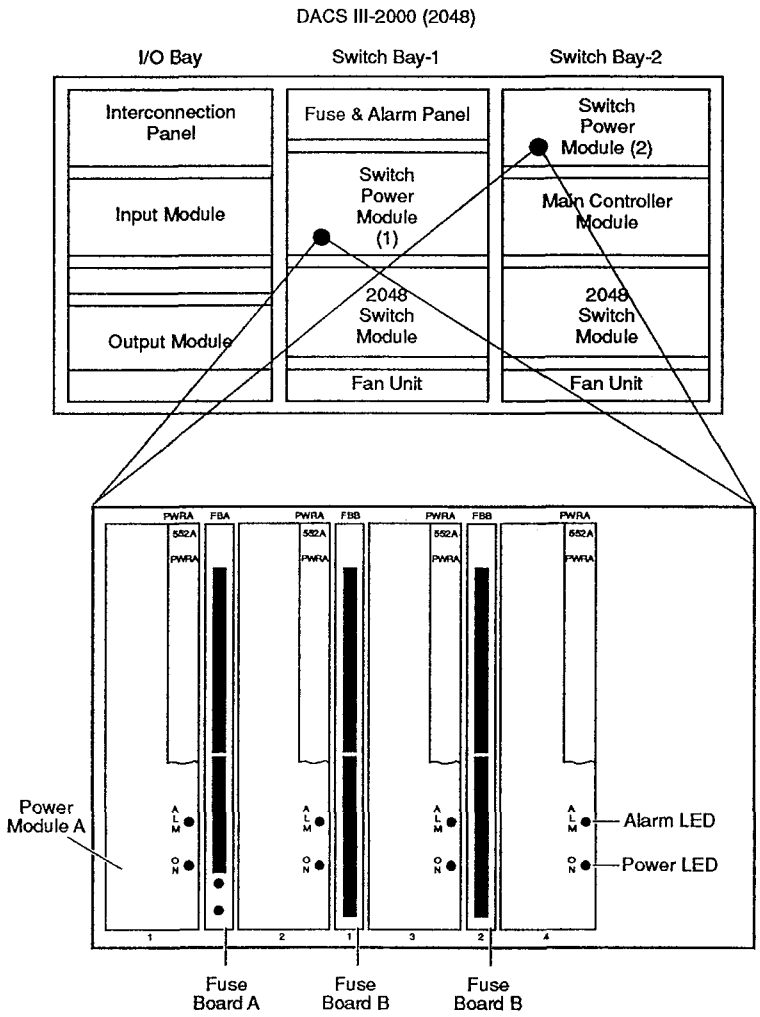

Notice that the DACS III-2000 (2048) system requires two switch power modules: one in switch bay-1; and another in switch bay-2.

Figure B-24. SW PWR Module—DACS III-2000 (2048)—Single Power Feed

Power Feed to the System

A DACS III-2000 system can receive electrical power from one of two powering schemes:

- single power feed
- dual power feed

Each scheme is described in the following sections.

Single Power Feed

The DACS III-2000 system can operate with the 3A and 3B battery plant (–48.0 volts DC nominal).

Single Power Feed—DACS III-2000 (1024)

For the DACS III-2000 (1024) system, there are five power buses connected to the fuse and alarm panel. These buses get their power from five feeders (A, B, C, D, and E) at the battery distribution feeder bay (BDFB). Each feeder is fused separately. Feeders A, B, C, and D have a 50-amp fuse at the BDFB. Feeder E has a 20-amp fuse.

The fuse and alarm panel has five alarm lights to show the status of each of the fuses supplied by the power buses. The E bus feeds the main controller module, while the A, B, C, and D buses feed the power circuit packs in each I/O module. The power circuit packs are fed so that a failure of any one bus will not affect more than one power circuit pack in any I/O or switch module.

The main controller module has three dedicated types of power circuit packs (PWRB, PWRC, and PWRD) and distributes power through fuse board E (FBE). This provides power and fusing to the printed backplane power buses. The main controller module circuit packs are connected to and receive power from these backplane power buses.

In the switch power (SW PWR) module, each power circuit pack output is placed on the appropriate power bus and is connected to the switch module power buses using local cables.

Each input and output interface module contains three PWRA power circuit packs. These are load sharing, dual output power circuit packs that power the appropriate input and output module backplane power buses. The circuit packs in the I/O module are individually fused and draw their power from the power buses. Each PWRA power circuit pack is independently connected to a fused 48-volt DC

source. For the location of the PWRA power circuit pack in input and output interface modules using a single power feed, see Figures B-15 and B-21.

Single Power Feed—DACS III-2000 (2048)

For the DACS III-2000 (2048) system, there are nine power buses connected to the fuse and alarm panel. These buses get their power from nine feeders (A, B, C, D, E, F, G, H, and J) at the BDFB. Each feeder is fused separately with a 50-amp fuse at the BDFB, except for feeder E, which has a 20-amp fuse.

The fuse and alarm panel has nine alarm lights to show the status of each fuse supplied by the power buses. The E bus feeds the main controller module, while the A, B, C, D, F, G, H, and J buses feed the power circuit pack in each I/O module. The power circuit packs are fed so that a failure of any one bus will not affect more than one power circuit pack in any I/O or switch module.

The main controller module has three dedicated types of power circuit packs (PWRB, PWRC, and PWRD) and distributes power through fuse board E (FBE). This provides power and fusing to the printed backplane power buses. The main controller module circuit packs are connected to and receive power from these backplane power buses.

The DACS III-2000 (2048) system contains two switch power (SW PWR) modules. In each SW PWR module, each power circuit pack output is placed on the appropriate power bus and is connected to the switch module power buses using local cables.

Each input and output interface module contains three PWRA power circuit packs. These are load sharing, dual output power circuit packs that power the appropriate I/O module backplane power buses. The circuit packs in the I/O module are individually fused and draw their power from the power buses. Each PWRA power circuit pack is independently connected to a fused 48-volts DC source. For the location of the PWRA circuit pack in input and output interface modules using a single power feed, see Figures B-15 and B-21.

Dual Power Feed

The optional dual power feed feature provides the capability for the DACS III-2000 system to interface with a duplicate central office power plant. This option allows the system to be powered from two different central office battery distribution plants so that a failure of one power plant does not affect existing service on the system.

For an STS-1 bay using dual power, the signal capacity must be reduced by 14 percent to 208 STS-1 ports. Slots 27 through 30 must be equipped with bus extender packs. This de-loading is not needed for a DS3 bay.

In the input and output interface modules, and the DS3 SW PWR module on a DACS III-2000 (1024) system, the three PWRA (552A) power circuit packs are replaced by two new PWRA2 (566A) power circuit packs and one new PWRA2 EXT (567A) power circuit pack extender. In each of the two DS3 SW PWR modules on a DACS III-2000 (2048) system, the four PWRA (552A) power circuit packs are replaced with four new PWRA2 (566A) power circuit packs.

Figure B-25 shows the new power circuit pack and power circuit pack extender.

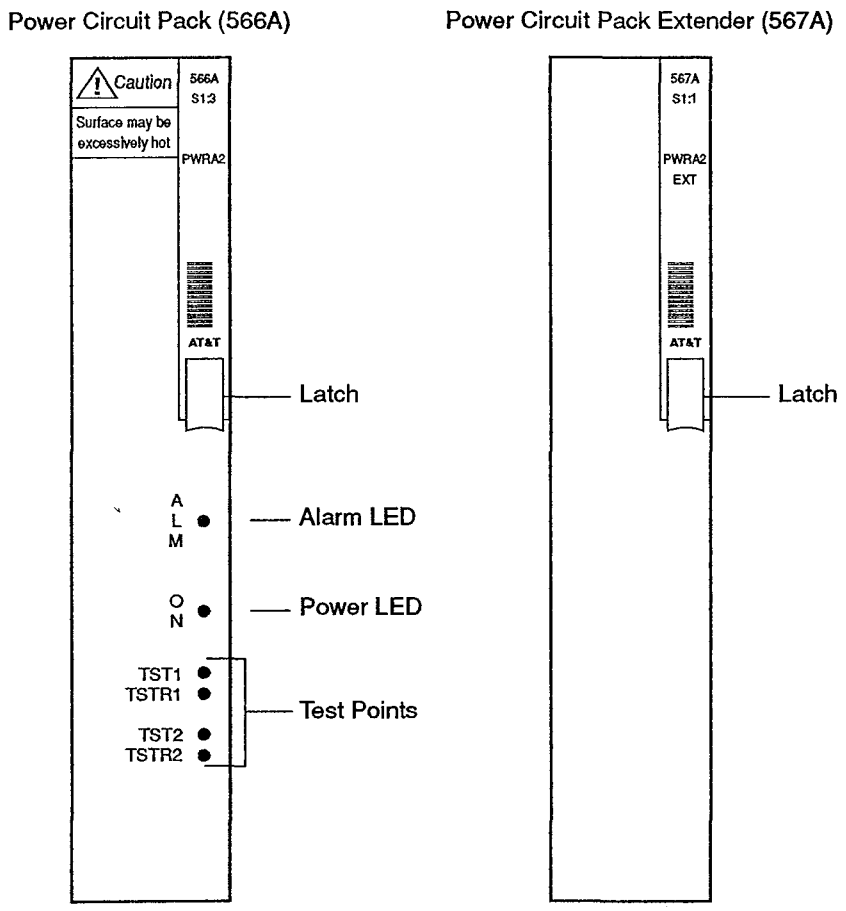

Figure B-25. New Power Circuit Pack (566A) and Extender (567A)

Figure B-26 shows the location of the new power circuit packs in an input/output bay.

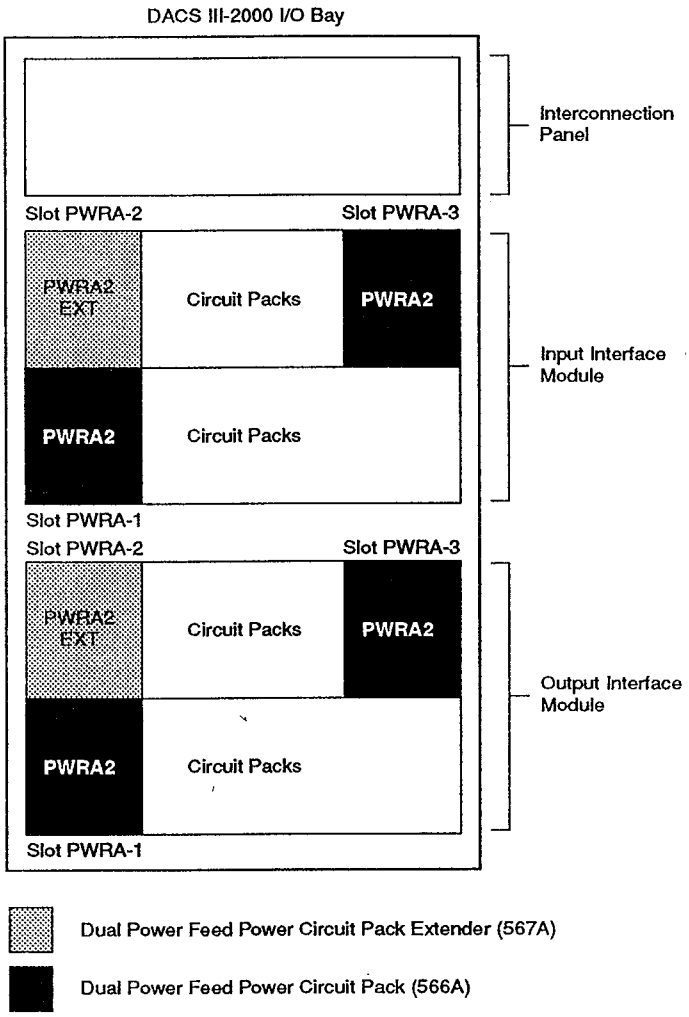

Figure B-26. Dual Power Feed Circuit Packs in an I/O Bay

Figure B-27 shows the location of the two new power circuit packs and one power circuit pack extender in the switch power module of a DACS III-2000 (1024) switch bay.

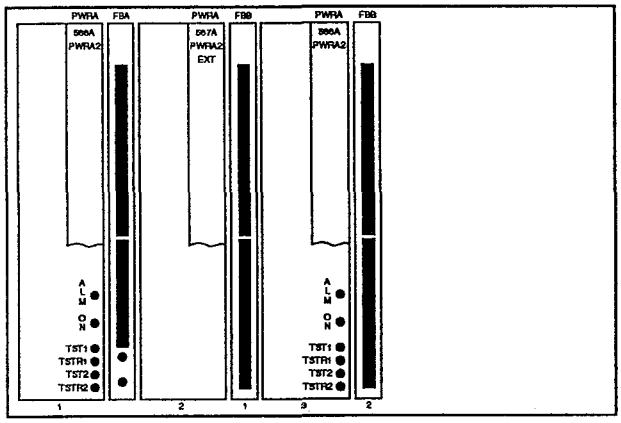

Figure B-27. SW PWR Module—DACS III-2000 (1024)—Dual Power Feed

Figure B-28 shows the location of the four new power circuit packs in each of the two switch power modules of a DACS III-2000 (2048) switch bay.

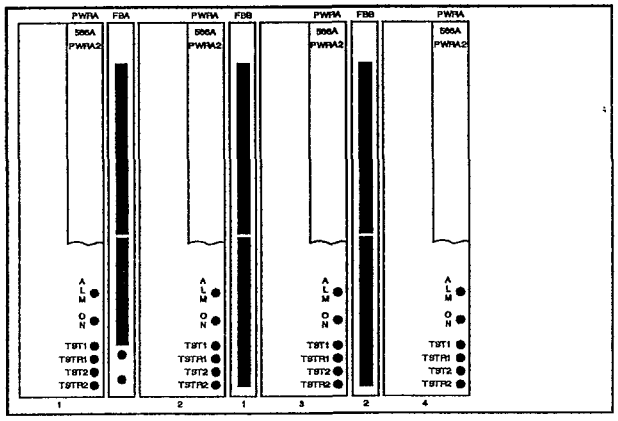

Figure B-28. SW PWR Module—DACS III-2000 (2048)—Dual Power Feed

Fuse and Alarm Panel

The DACS III-2000 system receives power from feeders that enter the system through the fuse and alarm panel. This panel distributes and fuses the -48 volts of input power.

Cooling

How your DACS III-2000 system is cooled depends on the size of the system.

Cooling a DACS III-2000 (1024) System

System cooling on the DACS III-2000 (1024) system occurs through natural convection.

Cooling a DACS III-2000 (2048) System

System cooling on the DACS III-2000 (2048) system occurs through both natural convection and fan units. For the input/output (I/O) bays, the system uses natural convection. For the two switch bays, the system uses fan units, with one fan unit at the bottom of each bay. Air enters under the filtered fan unit and blows through the circuit packs in each bay. A description of the fan unit follows.

Fan Unit—DACS III-2000 (2048)

The DACS III-2000 (2048) system contains a fan unit in each switch bay. The fan units are used to cool vertically mounted equipment in the switch bay only (not in the interface bays). Each fan unit consists of three horizontally mounted fans along with a filter, control switches, and indicators. For the standard fan unit (ED2C906-30, G1), routine maintenance includes keeping the air intake (under the fan unit) free of obstructions, inspecting the filter for obstructions, and changing the filter, if necessary.

The high performance fan unit (ED9C130-30, G3), included with new systems and available as a field modification for old systems, provides an alarm and LED that indicate when the filter needs replacement, is missing, or is ajar, thereby eliminating the need for a craftperson to visually check the filter.

The high performance fan unit generates an alarm when it encounters any of the conditions presented in Table B-10.

Table B-10. Alarm Conditions on New Fan Unit

LED Name (explanation)	LED color	State	Condition
MAIN (main power available)	green	on	Main power is greater than 30 ±1 volts DC.
		off	Main power falls below 30 ±1 volts DC.
AUX (auxiliary power available)	green	on	Auxiliary power is greater than 30 ±1 volts DC.
		off	Auxiliary power falls below 30 ±1 volts DC.
FILTER (air flow restriction)	red	on	Air supply falls below predetermined rate. Filter is physically removed or is ajar.
		off	Air supply reaches predetermined rate. Filter is present and is not ajar.
FAN/PWR (fan or power failure)	red	on	Fan spins below 1600 rpm. Fan controller board is not functioning properly. Fan reaches maximum speed. Filter is physically removed or is ajar. MAIN LED is not lit. AUX LED is not lit.
		off	Fan spins above 1600 rpm. Fan controller is functioning properly. Fan stays below maximum speed. Filter is present and is not ajar. MAIN LED is lit. AUX LED is lit.

Figure B-29 shows the high performance fan unit.

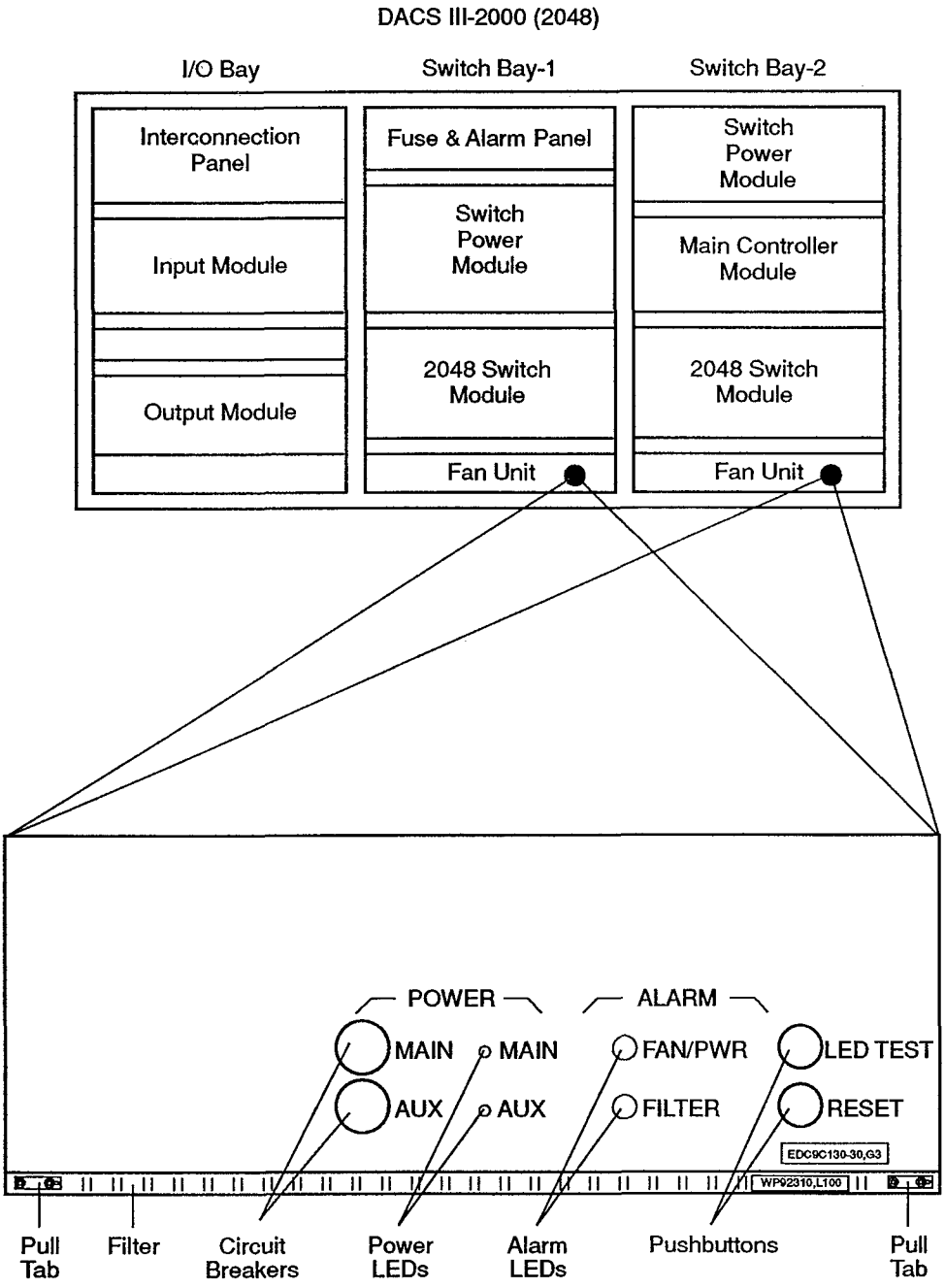

Figure B-29. High Performance Fan Unit—DACS III-2000 (2048)

Optional Hardware

The DACS III-2000 system can be modified with several pieces of optional equipment:

- BNC interconnect panel, described below
- EMI shields, described below
- high performance fan unit, described in "Cooling," earlier in this chapter
- dual power feed, described in "Power Feed to the System," earlier in this chapter
- enhanced status panel, described in "Main Controller (MC) Module," earlier in this chapter
- DS3 alarm indication signal detection (AISDET) circuit packs, described in "Output Interface Module," earlier in this chapter

BNC Interconnect Panel

You can order (with a new system) an optional BNC interconnect panel in place of the standard interconnect panel, if you prefer using BNC connectors instead of 2x2 connectors for connecting the coaxial cable carrying signals to the system.

The BNC interconnect panel accepts mini-coaxial cable, such as AT&T's KS-19224L2 type equipped with BNC connector KS-23558L4, and 735A type cable equipped with BNC connector KS-23558L6. Connecting 734A type cable or other large coaxial cable directly to the panel is not recommended. The loopback cable for this panel has a nonlocking push plug on each end for ease of installation and testing. You can use a connector tool such as the RT1L tool from Trompeter Electronics.

The engineering considerations for the BNC interconnect panel are the same as for the standard panel, except that BNC connectors are used instead of 2x2 connectors. The BNC interconnect panel cannot be installed in the field on a system that is carrying service.

Electromagnetic Interference (EMI) Shields

With the addition of the optional EMI shields, your DACS III-2000 system is compliant with the Federal Communications Commission (FCC) radiated emission requirements for a class A computing device. The shields are designed to provide EMI protection at the bay level. The EMI shields may be ordered with new systems or added to out-of-service frames in the field.

Figure B-30 shows the front of a DACS III-2000 (1024) system that has the EMI shields installed.

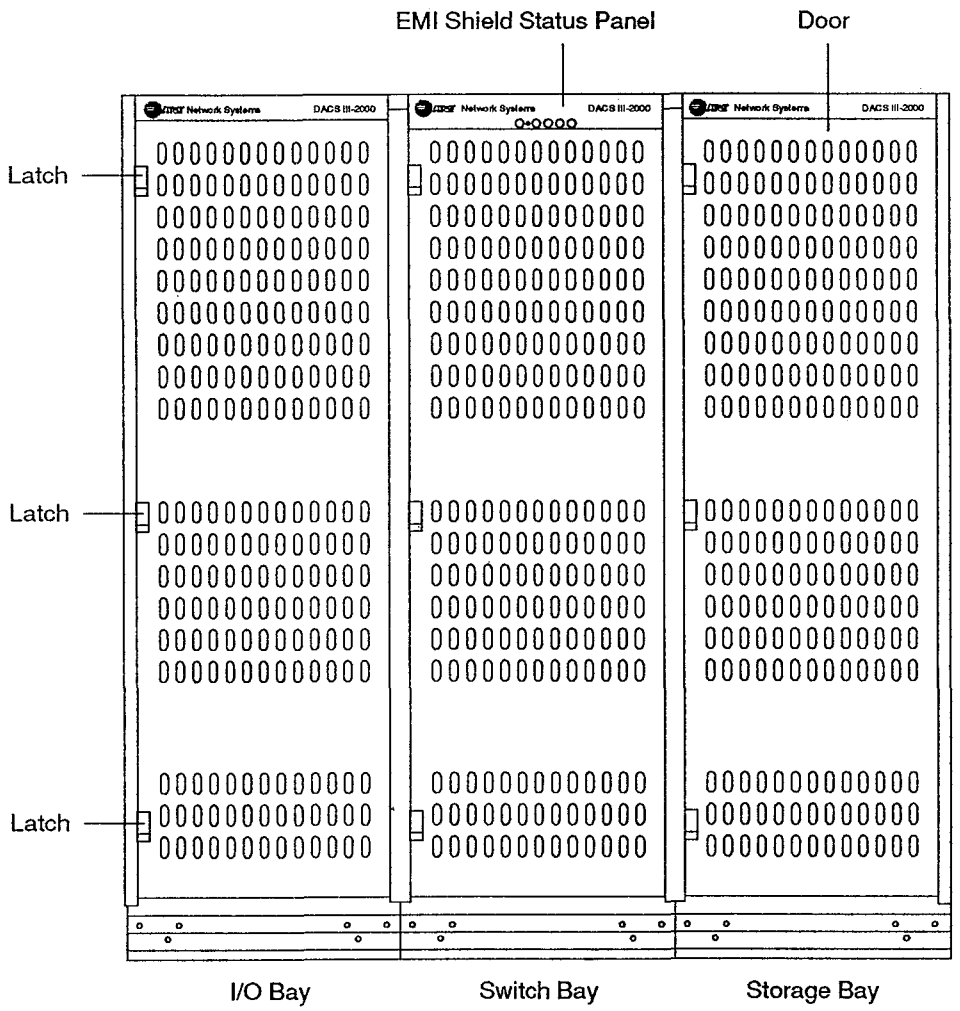

Figure B-30. Front View—EMI Shields on a DACS III-2000 (1024) System

Figure B-31 shows the EMI shield status panel.

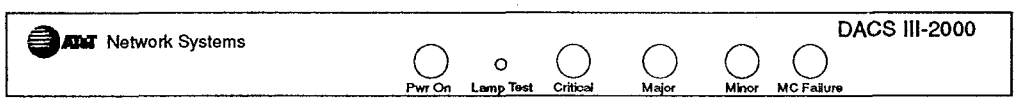

Figure B-31. EMI Shield Status Panel

Error Codes

C

Contents

Error Codes C-1

Contents

Error Codes

C

Error Codes

Whenever the DACS III-2000 denies a message or an action requested by a message, it produces an error message to indicate the condition that triggered the denial. The error condition is described by a four-character error code and, optionally, a corresponding abbreviated text.

The fixed error text is intended for parsing by a recipient operating system (OS), while the free-format error text is intended for human interpretation. Some error codes may not be displayed because the parser may detect, then reject, a command before that type of error reaches the application program.

The error codes are grouped by condition. The first letter of each error code stands for the condition. To find the explanation of an error code, find the table for the condition, then find the error code in that table. The tables and the error codes in each table are in alphabetical order.

Message Set 2 users will find the OPS/INE error codes integrated into the tables.

ERROR CODE	ALTERNATE MAP ERROR CONDITION
AAEX	Alternate map name already exists
AAIU	Alternate map is already in use
ADEX	Alternate map name does not exist
AERB	Alternate map editing resources busy; that is, an editing session is in progress
AMFP	Alternate map force flag (FRCD) is missing
ASNA	Space not available on hard disk for storing alternate map
ASNR	Status not right, that is, status parameter does not match actual status
AVPF	Alternate map verification process failed

ERROR CODE	EQUIPAGE ERROR CONDITION
ENEQ	Not equipped
ENMB	Not a multipoint bridge
ENMD	Equipage, not equipped with memory device.
ENRE	Not recognized
ENRI	Not equipped for retrieving the specified information
ENSI	Not equipped for setting the specified information
EQWT	Wrong type
ERLC	A redlined circuit

ERROR CODE	INPUT ERROR CONDITION
IBEX	Block extra
IBMS	Block missing
IBNC	Block not consistent
ICNC	Command not consistent
ICNV	Command not valid
IDMS	Input data missing
IDNC	Input data not consistent
IDNV	Input data not valid
IDRG	Input data out of range
IISP	Invalid syntax or punctuation
IITA	Invalid input TID target identifier
IPEX	Parameter extra
IPMS	Parameter missing
IPNC	Parameter not consistent
IPNV	Parameter not valid
ISCH	Syntax invalid character
ISPC	Syntax invalid punctuation

ERROR CODE	MULTIPLE ERROR CONDITION
MERR	Multiple error

ERROR CODE	PRIVILEGE ERROR CONDITION
PICC	Illegal command code for user privilege code
PIFC	Illegal field code
PIOC	Illegal operations channel

PIPW	Illegal password/user id code
PIRC	Illegal record control
PIUC	Illegal user code
PIUI	Illegal user identity

ERROR CODE	STATUS ERROR CONDITION
SAAL	Already allowed
SAAS	Already assigned; that is, slot has already been set to pending state
SABT	Aborted; that is, execution stopped abruptly before completion
SACC	Already cross-connected
SADC	Already disconnected
SAIN	Already inhibited
SAIS	Already in service
SAOS	Already out of service
SAPS	Already in protection state
SAPV	Already provisioned
SARB	All resources busy, which can include memory allocation
SARL	Already released
SAWS	Already in working state
SDIN	Date initialized
SDNC	Not consistent
SDNR	Data not ready
SDUN	Data unknown
SETP	Excessive temperature
SFDG	Failed diagnostics
SFFR	Failed to format entity
SFCP	Failed to copy necessary data
SLBM	List below maximum
SLEM	List exceeded maximum
SMPG	Missing program
SMVF	Media validation failed
SNAS	Not assigned, that is, not in pending state
SNBS	Not booted from SEC
SNCC	Not cross-connected
SNIS	Not in service
SNOS	Not out of service
SNPG	No program on the optical cartridge in SEC
SNPV	Not provisioned or not properly provisioned for the specified command (e.g. ED-ATTR-T3 requested for a slot provisioned for AIS detection circuit pack (ARW8))
SNST	Execution could not be started
SNVS	Not in valid state
SOSF	Out of service failed
SOST	Out of service, testing
SPFA	Protection unit failed
SPOS	PRI (DISKA and/or DISKB) not in IS-ACT state
SRID	Remaining in-service hard disk drive (DISKA or DISKB)

SRMI	Restore MC in progress
SRNA	Release not accepted
SROF	Requested operation (that is, your command) failed
SSRE	Resources exceeded
SSTP	Execution stopped gracefully before completion
SUNA	Upgrade not accepted
SWFA	Working unit failed

Acronyms and Abbreviations

D

Contents

Acronyms and Abbreviations D-1

Contents

Acronyms and Abbreviations

D

Acronym	Meaning
ACO	Alarm cutoff
AI	Asynchronous interface
AIS	Alarm indication signal
AISDET	Alarm indication signal detection
AISFRAMED	Alarm indication signal, framed
AISUNFRAMED	Alarm indication signal, unframed
AS&C	Alarm, surveillance, and control
ALM	Alarm
ANSI	American National Standards Institute
ARU	Automated Release Upgrade
ASCII	American Standard Code for Information Interchange
BDFB	Battery distribution feeder bay
BER	Bit error rate
BPV	Bipolar violation
BUS EXT	Bus extender
B3ZS	Bipolar three zero substitution
CCITT	International Telegraph and Telephone Consultative Committee
CI	Craft interface Communications interface

CIT	Craft interface terminal
CO	Central Office
CP	Circuit pack
CPU	Central Processing Unit
DACS	Digital Access and Cross-Connect System
DCSs	Digital cross-connect systems
DIB	Data identification block
DISKA	240 MB hard disk drive
DISKB	240 MB hard disk drive
DMB	Digital multipoint
DPF	Dual power feed
DS3	44.736 Mb/s digital signal
DS3IN	DS3 input
DS3OUT	DS3 output
DS3SW	DS3 switch
DSU	Data service unit
DSX	Digital cross-connect
DSX-3	DS3 digital cross-connect
EC-1	Electrical Carrier-1 signal
ECI	Enhanced communication interface
EID	Entity identification
EMC	Electromagnetic compatibility
EMI	Electromagnetic interference
ESD	Electrostatic discharge
FA	Fuse and alarm
FB	Fuse board
FIT	Failure in time
FMAC	Facility Maintenance and Administration Center
GB	Gigabytes
Gb/s	Gigabits per second
GTP	General Telemetry Processor
INDET	Indeterminate signal

INTFC	Interface
INVL	Interval for scheduled backups
I/O	Input/Output
IS	In-service
ISD	Idle signal detected
LAN	Local area network
LBO	Line buildout
LED	Light-emitting diode
LOF	Loss-of-frame
LSSIG	Loss-of-signal
MB	Megabytes
Mb/s	Megabits per second
MC	Main controller
MCOND	Maintenance condition
MML	Man-machine language
MON	Monitoring resource unavailable
MRB	Monitoring resources busy
MTBF	Mean time between failure
MTC	Maintenance interface
MTTR	Mean time to repair
MX	Memory expansion
NMA	Network monitoring and analysis
NPC	Network processing circuit
NTE	Network terminal equipment
NTEC	Network Terminal Equipment Center
NV-RAM	Nonvolatile random access memory
OAM&P	Operations administration, maintenance, and provisioning
OOS	Out-of-service
OPS/INE	Operations Provisionable System/Intelligent Network Element

OS	Operations system
PRI3	Circuit pack containing DISKA
PROTN	Protection
PWR	Power
QRSS	Quasirandom signal source
RAM	Random access memory
RDLD	Red-lined
ROM	Read-only memory
RTAC	Regional Technical Assistance Center
SCC	Switching control center
SCCS	Switching control center system
SCI	Switch communication interface
SCSI	Small Computer System Interface
SEC	128 MB optical drive
SEC3	Circuit pack containing DISKB and SEC
SFTWR	Software
SLC	Subscriber loop carrier
S/N	Signal-to-noise
SONET	Synchronous Optical NETwork
SPCS	Stored program control system
SSC	Secondary storage controller
STADAT	Starting date for scheduled backups
STATM	Starting time for scheduled backups
STC	Serving test center
STS-1	Synchronous transport signal level 1
SW	Switch
SW CTR	Switch center
SW PWR MOD	Switch power module
T-CVL	Threshold for Coding Violation count-Line (CVL)

T-ESL	Threshold for Errored Second count-Line (ESL)
T-SESL	Threshold for Severely Errored Second count-Line (SESL)
T-UASL	Threshold for Unavailable Second count-Line (UASL)
TABS	Telemetry asynchronous block serial protocol
TASC	Telecommunications alarm surveillance and control protocol
TBOS	Telemetry byte-oriented serial protocol
TCAS	T-Carrier administration system
TID	Target identification
TL-1	Transaction language-1 (TL-1) Issue 4 message set
TSO	Technical Support Organization
UC	Unit controller
UCAL	User community authorization level
UCFC	User community functional category
UI	Unit interface
UID	User identification code
UNIT CONTR	Unit controller
UPC	User privilege code
VMR	Violation monitor and removal
WKG	Working RAM database

Glossary

1xN broadcast
See multiple port (conference) broadcast.

1x2 (bridge) broadcast
Any one existing connection can be cross-connected to a second output port without affecting service. A single cross-connection is referred to as a "bridge;" multiple bridges are referred to as a "conference." *See also* **bridge** and **broadcast.**

A

AIS
See **alarm indication signal.**

alarm
In a DACS III-2000 system, an audible or visual indication or a software message that indicates a problem in the system.

alarm cutoff (ACO) indicator
When active, indicates that the audible alarms have been silenced.

alarm delay
Specifies the alarm delay (in seconds) for software-detected alarm conditions. Initial value is 10 seconds.

alarm indication signal (AIS)
A signal transmitted downstream if the incoming signal is defective.

alphanumeric characters
Letters and digits.

ASCII characters
Letters, digits, and symbols used in the American Standard Code for Information Interchange.

ASEQ
A sequential decimal counter that increments for every REPT message generated. It is used to check for missed output. The counter wraps around from 999 to 001 (skipping 000).

asynchronous
A method of transmitting data in which each transmitted character is preceded by a start bit and followed by a stop bit, thus permitting the interval between characters to vary.

attribute
Alarm indication level—major, minor, or no alarm.

autolock
When the system autolocks an entity, it switches to protection and forbids return to the working entity even if the trouble clears.

automated release upgrade (ARU)
The feature that established the platform for automated release upgrade procedures for any release that follows Release 3.0.

autonomous
Done by the system without direction by a user.

autoprovisioned
Put into the provisioned state automatically by the system.

B

battery distribution feeder bay (BDFB)
The fuse bay where power is distributed to the system. "BDFB" is a generic term for BCB, BDCBB, and Power Equalization Center.

baud rate
Transmission rate (bits per second) on a link.

baud rate, firmware
Baud rate associated with the firmware on a circuit pack. Not changeable by the user.

baud rate, software
Baud rate associated with a particular link. It is stored in the software database and may be changed by the user.

bay
In a DACS III-2000 system, a 7 ft. by 2 ft. 2 in. frame that houses modules and other equipment. There are two types of bays: input/output and switch.

bipolar violation (BPV)
A violation of the alternating +1, -1 pattern.

bipolar with 3-zero substitution (B3ZS)
A DS3 line code.

bit error rate
The rate of the number of erroneous bits transmitted during a one-second period.

blue code
Common reference to the alarm generated by alarm indication signal detection (AISDET).

boot
To transfer contents of backup memory into the system's working memory.

bridge
To cross-connect one connection to a second output port. *See also* **1x2 (bridge) broadcast.**

broadcast
Form a bridge.

bus extender (BUS EXT)
Circuit pack used in vacant input and output interface slots for continuity of the protection bus.

byte
Usually refers to a group of eight consecutive binary digits, but sometimes used for bit groups of other sizes.

C

center stage switch
The part of the DACS III-2000 system responsible for receiving signals from the input stage and passing them on to the output stage.

circuit pack
Term used for hardware that can be inserted into an equipment shelf. Synonymous with plug-in or pack.

command mode
One of two modes used to communicate with the DACS III-2000 system. This mode involves entering commands directly into the system without any prompts.

communications interface link (CILINK)
Snider or X.25 links that provide users with the capability of communicating with the system.

conference
Term used to denote up to 31 bridges.

correlation tag (CTAG)
Used to correlate an input command with its associated output response.

craft interface terminal (CIT)
Device consisting of at least a screen and a keyboard, and used to communicate with the DACS III-2000 system.

create
Enter an entity into the system database so that it can be autoprovisioned.

crosstalk
A signal induced into one transmission line from another transmission line.

cross-connect
Associating DACS III-2000 input port(s) with specific output port(s).

D

DACScan™-2000 Controller
Intelligent windowing system that automates control over all elements.

DACS III-2000 Digital Cross-Connect System
A selfhealing network and broadband digital cross-connect system that can handle SONET signals.

DACS IV-2000 Digital Cross-Connect System
A wideband digital cross-connect system.

database (DBASE)
A record of cross-connections, status of entities and facilities, and other data.

DDM-2000 OC-3/OC-12 Multiplexer
A SONET-standard multiplexer.

default
A value the system automatically employs for a parameter if the user does not specify a value.

delimiter
A punctuation mark (colon or comma) used to separate two parameters in an input message.

demultiplexing
Splitting apart.

diagnostics
A software program that locates hardware malfunctions within the system.

digital signal level
For example, DS1 (1.544 Mb/s), DS1C (3.125 Mb/s), DS2 (6.312 Mb/s), DS3 (44.736 Mb/s).

DS3 IDLE signal
A signal (11001100) applied to any DACS III-2000 output port that is not cross-connected to an input port. This signal lets "downstream" network elements know that the facility is operating normally even though the DACS III-2000 system is not sending a normal signal.

dual power feed
Feature that provides the capability for the DACS III-2000 system to interface with a duplicate central office power plant.

duplex
A communication mode in which transmission can occur in both directions simultaneously (sometimes referred to as full duplex). *See* **half duplex**.

E

echo
Display an input at a terminal (a user ID is echoed, but a password is not).

electrostatic discharge (ESD)
The sudden release (discharge) of the charge associated with static electricity.

entity
A specific piece of hardware (such as a circuit pack, memory device, or link) that has been assigned a name recognized by the system.

entity identifier
The name used by the system to refer to an entity.

equipment
Anything that is physically located in a frame that is not a circuit pack (for example, a fan unit, a status panel.)

equipped (EQPD)
The entity is in the system database but is not yet provisioned. The entity is physically present in its assigned location.

F

facility
A one-way or two-way circuit connected to the DACS III-2000 system that carries a transmission signal (such as a DS3 or STS-1 signal).

facility rolling
Process of transferring traffic from one facility to another.

firmware
Programs stored in nonvolatile, read-only memory in a system to direct basic system operations.

frame
The smallest repetitive block of digital data being transmitted (193 bits in a DS1 signal, which contains twenty-four 8-bit bytes and a synchronizing frame bit). Also, in the context of a DACS III-2000 system, the metal structure that holds the I/O and switch bays that make up the system.

FT-2000 OC-48 Lightwave System
A synchronous, digital signal transmission system provides high-capacity transmission of voice, data, and video signals.

G

generic
See **release.**

H

half duplex
A facility that permits transmission in both directions, but only one direction at a time.

header
The first line of an output message.

hit
A disruption of service that lasts for less than 1 second. *See* **outage.**

I

input/output bay
The unit of the DACS III-2000 system that handles the first and third stages of switching signals.

in service (IS)
The entity is performing normal service functions, either active or standby.

interconnection panel
The panel in each unit that terminates signals.

J

jitter
Short-term variations in properties of a digital signal.

L

line buildout (LBO)
An attenuating (signal-reducing) element used to keep output signal strength between desired limits.

line impedance
The impedance (both resistance and reactance) measured across the terminals of a transmission line.

loopback
A circuit arrangement that causes a received signal to be returned to its source.

loss-of-frame (LOF)
A failure on the incoming signal where the framing pattern is not detected.

loss-of-signal (LSSIG)
The incoming signal is absent or unacceptably low in amplitude.

M

main controller (MC) module
Controls the interfaces and the network switch, maintains the system database and cross-connect maps, and provides local and remote operations interfaces.

maintenance condition (MCOND)
An entity state in which some normal service functions are suspended, either because of a problem or in order to perform special functions (copy memory) that cannot be performed while normal service is being provided.

man-machine language (MML)
A message set.

master release
The optical cartridge with the new DACS III-2000 software that is shipped from the factory when you order a new release.

menu/prompt mode
One of two modes used to communicate with the DACS III-2000 system. When operating in this mode, the system lets you choose commands from menus and then prompts you for information to complete the command.

message set
Message Set 1 includes commands and messages used by existing users and operating systems. *Message Set 2* includes commands and messages specific to NMA and OPS/INE systems and their users.

modem
(Modulator/Demodulator) A device used at the near end of a communications circuit to change digital data into voice signals for transmission over voice channel telephone lines. At the far end, it changes voice signals back into digital data.

multiple port (conference) broadcast
Any input port can be cross-connected to any other output port in the system without affecting service. This type of bridge can be used for multipoint (conference) service and to connect test sets and monitors.

multiplexer
A device that combines several distinct signals into a single signal.

multiplexing
The combining of multiple data channels onto a single transmission medium.

N

network
A system of switches, multiplexers, and interfaces interconnected by transmission lines that carry communications signals from one point to another.

network element (NE)
A DACS III-2000 frame is a network element.

nonblocking
In DACS III-2000 systems, the ability of any input port to be cross-connected to any output port on the system.

nonvolatile storage
Storage devices that do not require continuous power to preserve their contents. Examples in the DACS III-2000 system include the hard disk drives and the optical drive.

notification codes
Indication of the severity of an alarm; CR means critical; MJ means major; MN means minor; NA means no alarm; and CL means cleared alarm.

O

Operations Provisionable System/Intelligent Network Element (OPS/INE)
A Bellcore Operations System (OS).

outage
A disruption of service that persists for more than 1 second. *See* **hit.**

out of service (OOS)
The entity is not providing its normal service function (removed from service or protected) either because of a system problem or because it has been removed from service manually. OOS is also used for out-of-synchronism.

P

pack
See **circuit pack.**

parameters
All the elements of an input command that follow the verb and modifiers.

parity check
To determine whether a block of digital data has been corrupted in transmission, one can use an even-parity format in which an extra bit is added to the block at the transmitter if necessary so that the block always contains an even number of one bits. A parity-checking circuit at the receiving end can determine whether an error has occurred in transmission. An odd-parity format can also be used for the same purpose.

plug-in
See **circuit pack.**

port
The place of access on an interface circuit pack that connects the DACS III-2000 system to the signal.

primary
The system database, program, and alternate maps, which are duplicated on the two hard disk drives, DISKA and DISKB. DISKA is shadowed by DISKB so that in the event that DISKA has a failure, DISKB carries the most current system cross-connections.

priority of action codes
Indicates the alarm code (priority of action), which identifies the severity of the automatic message: ** indicates a major alarm, * indicates a minor alarm, A indicates no alarm; M indicates the results of manual action.

protection ratio
The ratio between the number of protection circuit packs available and the number of working circuit packs.

protection switching
An autonomous function of the DACS III-2000 system that performs fault isolation procedures when improper parity is detected inside the frame.

protocol type
Indicates the protocol supported on a user interface link. Initial values are SNIDER on links 1, 2, and 3; TABS or TBOS on link 4; and X.25 on links 5 and 6.

provisioned (PROV)
The entity is ready to perform its intended function. A provisioned entity can be active, in-service, standby, provisioned out-of-service, or out-of-service.

R

random access memory (RAM)
Volatile, fast-access memory.

redlined (RDLD)
A circuit that is given special protection against unintentional disconnection.

release
The set of software programs used by a computer-type device to perform functions by the user. When a new program set is produced to add new functions or to eliminate troubles, it is given a new release number and is sent to the user on a new optional cartridge.

remote reset function
Enables a remote location to reset the DACS III-2000 system.

rollover
Operation used when the transmission facility between the system and an upstream is to be replaced.

routine maintenance
Scheduled procedures done to keep the DACS III-2000 system in proper working order.

S

SEC BOOT
The momentary physical switch on the SSC3 circuit pack that allows a boot of the system from the program stored on the optical drive (SEC).

secondary storage subsystem
Enhanced feature that improves system availability for restoration and provides real-time database updates to nonvolatile storage. It consists of three new circuit packs: the secondary storage controller (SSC3), PRI3, and SEC3.

Snider
Protocol (message format) used on administrative links 1, 2, and 3. It supports both the menu mode and the command mode.

software identification block (SIB)
Identifies the software version that is running on the system. Maintained with the program on the magnetic storage devices and in program memory.

split (SPLT)
Test access state in which an incoming signal is cross-connected to the receiver of a test set rather than to a previously connected output port, and a signal from the transmitter of the test set is cross-connected to the previously connected output port.

standby hard disk drive
The second hard disk drive in the secondary storage subsystem. Known as DISKB, it shadows DISKA and is ready to go into service should there be a failure on DISKA.

Switched Virtual Circuit (SVC)
See **X.25**

synchronous
A method of transmitting data in which the transmitter and receiver are synchronized, eliminating any need for start and stop bits.

Synchronous Optical NETwork (SONET)
A standard for the base rate, formatting, and multiplexing operations for use in optical interfaces.

system
Refers to both hardware and software.

system administrator
The person who administers a softwarebased system. The system administrator has access to all system software and controls the access for others.

T

target identification (TID)
Specifies the target identifier (name) of the system.

telemetry
External connections to the DACS III-2000 system that monitor the vital components of the system.

three-stage switching
The DACS III-2000 switching design consists of three switching stages: input stage (DS3IN|STS1IN), center stage (DS3SW), and output stage (DS3OUT|STS1OUT).

Transaction Language-1 (TL-1) Issue 4
A message set.

T1
Refers to DS1 (1.544 Mb/s) signals.

T3
Refers to DS3 (44.736 Mb/s) signals.

T-CVL
Condition type meaning Threshold for Coding Violation count-Line (CVL) has been reached or exceeded.

T-CVS

Condition type meaning Threshold for Coding Violation count-Section (CVS) has been reached or exceeded.

T-ESL

Condition type meaning Threshold for Errored Second count-Line (ESL) has been reached or exceeded.

T-ESS
Condition type meaning Threshold for Errored Second count-Section (ESS) has been reached or exceeded.

T-SESL

Condition type meaning Threshold for Severely Errored Second count-Line (SESL) has been reached or exceeded.

T-SESS
Condition type meaning Threshold for Severely Errored Second count-Section (SESS) has been reached or exceeded.

T-UASL

Condition type meaning Threshold for Unavailable Second count-Line (UASL) has been reached or exceeded.

T-UASS
Condition type meaning Threshold for Unavailable Second count-Secton (UASS) has been reached or exceeded.

U

unit
In a DACS III-2000 system, a bay consisting of an interface module, an interface module, and an interconnection panel.

user community authorization level (UCAL)
Specifies the system authorization level; 5 denotes a system administrator; 1 denotes an ordinary user.

user community functional category (UCFC)
Used to specify the category of functions that a user is allowed to perform.

V

virtual circuit
A connection established by circuit configurations rather than by hard wiring.

voice channel
In digital transmission, a signal at the DS0 signal level.

volatile memory
Type of memory where data is lost if electrical power to it is interrupted.

volatile storage
Storage devices that require continuous power to preserve their contents. An example in the DACS III-2000 system includes the RAM in the main controller (MC) module.

W

working memory (WKG)
Fast access memory in the main controller (MC) module and interface modules. Also called random access memory (RAM).

working RAM database
Reflects the physical state of the system. The WKG database is contained in nonvolatile solid-state memory within the secondary storage controller (SSC3).

X

X.25
Protocol (message format) used on links 5 and 6. It supports the command mode but not the menu mode. An X.25 link can be equipped with a PAD (packet assembler-disassembler) to enable four terminals to time share the link as four switched virtual circuits.

Index

Symbols

* alarm code, 9-2
* priority action code, 2-18
** alarm code, 9-2
** priority action code, 2-18
*C alarm code, 9-2
*C priority action code, 2-18
?D command acknowledgment, 2-17
?E command acknowledgment, 2-17
?P command acknowledgment, 2-17
?T command acknowledgment, 2-17
?V command acknowledgment, 2-17
?X command acknowledgment, 2-17

Numerics

552A power circuit pack, 9-38
  fig. in DS3IN INTFC module, 4-6
  fig. in DS3OUT INTFC module, 4-8
566A power circuit pack
  fig., 9-40
567A power circuit pack extender
  fig., 9-40
  fig. locking mechanism, 9-52
728B cable, 9-13, 9-14
734A cable, 9-13, 9-14
735A cable, 9-13, 9-14

A

A alarm code, 9-2
A priority action code, 2-18
AAEX error code, C-2
AAIU error code, C-2
Abbreviations
  list of, D-1
Acceptance process
  checking I/O bays, 4-4
  checking switch bays, 4-10
  initialization, 4-12
  loading software, 4-12
  provisioning I/O bays, 4-16
  setting system date and time, 4-13
  testing alarms, 4-22
  testing alarms and telemetry, 4-35
  testing fan units, 4-40
  testing protection switching, 4-32
  verifying external cable, 4-31
  visual inspection, 4-2
Acknowledgments for commands, 2-17
ACO switch, B-18
ACO. *See* Alarm cutoff (ACO), D-1
Acronyms
  list of, D-1
ADEX error code, C-2
Administration
  of links, 2-1, 2-2, 2-3, 2-6
Administrative links
  baud rates, B-22
  changes to baud rate, 2-7, 2-9
  electrical connections, B-22
  function, B-22
  locked off of, 9-79
  protocol, B-22
  the FRD condition type and, 9-79
Admonishments
  caution, xxxix
  danger, xxxix
  warning, xxxix
AERB error code, C-2
Air inlet
  fig. location on high performance fan unit, 4-41
  fig. location on standard fan unit, 4-46
AIS detection (AISDET) circuit packs
  DS3OUT INTFC module, B-41, B-42
  function, B-41
AIS. *See* Alarm indication signal (AIS), D-1
AISDET circuit pack, 6-16, 6-19
AISDET. *See* Alarm indication signal detection (AISDET), D-1
Alarm closure connector, B-25
Alarm cutoff (ACO)
  LED, 4-20
Alarm indication signal detection (AISDET)
  circuit packs, 6-16, 6-19
  default setting, 5-2
  frame labels, 6-17
  modifying frame for, 6-16
  provisioning, 5-4
  provisioning options, 5-2
Alarm LEDs
  on fan units, 4-20
Alarms
  ** code, 9-2
  *C code, 9-2
  A code, 9-2
  activating critical alarm, 5-37
  audible, 9-2
  code parameters, 9-2

critical (CR), 9-2
error detection and, 9-2
fan unit, B-54
fig. alarm LEDs in DS3OUT INTFC module, 4-6, 4-8
fig. alarm LEDs in STS1IN INTFC module, 4-7
fig. alarm LEDs in STS1OUT INTFC module, 4-9
fig. standard fan unit alarm test LED, 4-46
improved reporting, 1-4
indicated on system, 9-2
levels, 9-2, 9-5
major (MJ), 9-2
message parameters list, 9-2
minor (MN), 9-2
MJ (major), 9-2
MN (minor), 9-2
notification codes, 9-2
power units on (1024) system and, 9-65
priority for clearing, 9-5
procedure for clearing, 9-3
service affecting status, 9-5
system messages and, 9-2
testing during acceptance, 4-22, 4-35
used for problem identification, 9-3
visual, 9-2
ALM TEST switch
fig. location on standard fan unit, 4-46
Alternate maps
changing, 5-11
commands for, 5-7
creating, 5-9
deleting, 5-13
entity identifiers (1024), 2-15
entity identifiers (2048), 2-16
increased capability, 1-5
retrieving, 5-14
scheduling automatic backups, 8-24
use of, 5-6
AMFP error code, C-2
Answerback setting, 2-6
ARW16 circuit pack, 4-27
ARW6 circuit pack, 4-27
ASNA error code, C-2
ASNR error code, C-2
Asynchronous protocol, B-22
Automatic backups
of alternate maps, 8-24
of database, 8-24
Auxiliary power circuit breaker
fig location on standard fan unit, 4-46
AVPF error code, C-2
AWP11 circuit pack, 4-3
AWP12 circuit pack, 4-3
AWP4B circuit pack, 4-3

B

Backups
automatic, 8-24
command format, 8-17
of software release, 8-18
Battery distribution feeder bay (BDFB)
on a (1024), B-49
on a (2048), B-50
Baud rate
on CILINK-4, 2-6
on Snider links, 2-8, 2-9
setting, 2-6, 2-9
Bays
and related modules, B-11
defined, B-11
Benefits
list from Release 4.0, 1-1
Bipolar violations (BPV)
thresholds for, 5-44
BNC interconnect panel, B-57
BPV. *See* Bipolar violations (BPV), D-1
BUS EXT circuit packs, B-30
BUS EXT. *See* Bus extender (BUS EXT) circuit packs, D-1
Bus extender (BUS EXT) circuit packs, B-30, B-42
function, B-29, B-41
input INTFC module, B-29
Output INTFC module, B-41
Bus(es)
blow primary fuse on other buses, 9-83
blown primary fuse on BUS E, 9-82
for high performance fan unit (ED9C130-30,G3), 9-35
for standard fan units (ED2C906-30,G1), 9-32

C

Cables
728B type, 9-13, 9-14
734A type, 9-13, 9-14
735A type, 9-13, 9-14
for DS3OUT interface circuit packs, 6-4
for STS1OUT interface circuit packs, 6-4
KS-19224,L2 type, 9-13, 9-14
testing of interbay, 4-26
verifying external, during acceptance, 4-31
Cartridge(s)
fig. exposing disk surface on optical, 8-12
fig. for cleaning optical drive lens, 8-7
fig. insertion of lens cleaning cartridge into optical drive, 8-9

fig. removal of optical, 8-6
fig. rotating turning knob for cleaning optical cartridge, 8-14
fig. wiping optical cartridge disk surface, 8-15
Caution admonishment, meaning of, xxxix
Central Processing Unit (CPU), B-14, B-16
entity identifier (1024), 2-15
entity identifier (2048), 2-16
fig. in (2048) main controller (MC) module, 4-11
function, B-16
CILINK-4
baud rate, 2-6
communication problems, 2-10
CILINKs
changes to baud rate, 2-7, 2-9
checking during acceptance, 4-14
entity identifiers (1024), 2-15
entity identifiers (2048), 2-16
locked off of, 9-79
the FRD condition type and, 9-79
Circuit breaker
fig. for auxiliary power on standard fan unit, 4-46
fig. for main power on standard fan unit, 4-46
Circuit pack
ARW16, 4-27
Circuit packs
552A, 9-38
adding to service, 6-3
AISDET, 5-4, 6-16, 6-19, B-42
ARW1B, 4-4
ARW2B, 4-4
ARW3, 4-20
ARW6, 4-27
ARW8, 5-4, 6-16
AWP11, 4-3
AWP12, 4-3
AWP4B, 4-3
AWR8, 4-3
AWR9, 4-3
BUS EXT, B-42
bus extender (BUS EXT), B-30
care and handling of, 3-2
description, B-12
DS3 PROTN SW, 4-20, B-30, B-42
DS3IN INTFC, 4-4, B-12, B-26, B-30
DS3IN PROTN INTFC, 4-27, B-30
DS3OUT INTFC, 4-4, 6-16, 6-19, B-38, B-40
ECI2, 4-3
ECI5, 4-3
ED9C127-30,G1, 4-3
ED9C128-30,G1, 4-3
electrostatic discharge (ESD) and, 3-2
FBA, 9-93
FBB, 9-93, B-46
FBE, B-14, B-17, B-49
fig. installation steps for DS3SWL CTR, 3-11, 3-12, 3-13, 3-14
fig. installation steps for Input, Output, DS3SW, PRI3, SEC3, 3-5, 3-6, 3-7, 3-8
fig. side view of output interface circuit pack with LBO IN settings, 6-9
fig. side view of output interface circuit pack with LBO OUT settings, 6-8
fig. slot numbers in DS3IN INTFC module, 4-6
fig. slot numbers in DS3OUT INTFC module, 4-8
fig. slot numbers in STS1IN INTFC module, 4-7
fig. slot numbers in STS1OUT INTFC module, 4-9
input interface, B-26
installation, 3-4
memory expansion (MX2) circuit pack, 4-3
MTC2, 4-3
output INTFC, B-38
PRI3, 4-3
procedure for installing DS3SWL CTR, 3-10
procedure for removing DS3SWL CTR, 3-15
procedure for removing Input, Output, DS3SW, 3-9
PWRA, B-42, B-46
PWRA2, B-42, B-46
PWRA2 EXT, B-42, B-46
removal from frame, 3-4
removing from service, 6-12, 6-27, 6-38
SEC3, 4-3
SSC3, 4-3
STS1 PROTN SW, 4-20, B-30
STS1IN INTFC, 4-4, B-26, B-30
STS1IN PROTN INTFC, 4-27, B-30
STS1OUT INTFC, 4-4, B-38, B-40
SW PWR, B-46
UNIT CONTR3, B-40, B-42
Circuits
provisioning, 5-16
provisioning parameters, 5-16
retrieving one-way cross-connections, 5-18, 6-27, 6-38
retrieving rollover cross-connections, 5-24
retrieving two-way cross-connections, 5-21
CIT. *See* Craft interface terminal, D-2
CL alarm notification code, 9-2
Classes about Release 4.0, xlii
Cleaning
fig. attaching knob to optical cartridge, 8-13
fig. cartridge for optical drive lens, 8-7
fig. inserting optical drive lens cleaning cartridge, 8-9
fig. kit for optical drive lnes, 8-11
fig. of optical drive lens, 8-7
COACH, xliii
Command acknowledgment
?D, 2-17
?E, 2-17
?P, 2-17
?T, 2-17

?V, 2-17
?X, 2-17
IISP, 2-17
NG, 2-17
PF, 2-17
RL, 2-17
Command mode, 2-19, 5-34
Command verification
default setting, 5-2
provisioning, 5-34
provisioning options, 5-2
setting of, 5-34
use of, 5-36
Commands
acknowledgments, 2-17
format, 2-14
function of, 2-14
modifiers, 2-14
parameters, 2-14
punctuation of, 2-14
typeface used for, xxxvii
verbs, 2-14
Communication interface link
entity identifier (1024), 2-15
entity identifier (2048), 2-16
Condition types
EXTERR, 9-78
FRD, 9-79
HITEMP, 9-81
INT on a link, 9-23
INT on DISKA, DISKB, and SEC, 10-1
INT on DS3IN or DS3OUT INTFC and unit controller (UNIT CONTR3), 9-70
INT on DS3SW circuit packs, 9-25, 9-27
INT on high performance fan unit (ED9C130-30,G3), 9-34
INT on input circuit packs, 9-25
INT on main controller (MC) module, 9-23
INT on output circuit packs, 9-25
INT on PWRA (552A) circuit packs, 9-38
INT on PWRA2 (566A) circuit packs, 9-40, 9-43
INT on PWRB circuit packs, 9-67
INT on PWRC circuit packs, 9-67
INT on PWRD circuit packs, 9-67
INT on standard fan unit (ED2C906-30,G1), 9-31
INT on STS1IN or STS1OUT INTFC and unit controller (UNIT CONTR3), 9-70
INT on unit controller (UNIT CONTR3), 9-69
MAN, 9-73
MISC [1], 9-75
MISC [100] on DS3SW circuit packs, 9-25, 9-27
MISC [100] on DS3SWL circuit packs, 9-25
MISC [100] on input circuit packs, 9-25
MISC [100] on output circuit packs, 9-25
on DS3SWL circuit packs, 9-25
TODC, 9-77
Condition types, PAINTGRT, 11-1, 1
Connectors
alarm closure, B-25
interface, B-22
remote reset function, B-25
TTY, B-22
Controller, B-16
Conventions
for parameters, xxxvii
for user input, xxxvii
Converting
DS3 I/O Bay to STS1 I/O Bay, 6-25, 6-36
STS1 I/O Bay to DS3 I/O Bay, 6-25, 6-36
Cooling, B-54
(1024), B-54
(2048), B-54
natural convection, B-54
new fan unit (2048), B-54
Courses about Release 4.0, xlii
CPU. *See* Central Processing Unit (CPU)
CR alarm notification code, 9-2
Craft interface terminal
adding, 6-14
logging on, 2-11
removing, 6-15
Creating
logins, 2-2
user IDs, 2-2
Creation
of logins, 2-2
of user IDs, 2-2
Critical alarms
default setting, 5-2
provisioning options, 5-2
Cross-connections
fig. FROM port, TO port, and TEST port connections, 7-11
fig. split (SPLT) connection, 7-13
Cross-connections
one-way, 5-17
rollovers, 5-23
two-way, 5-20

D

DACS III-2000 (1024)
capacity, B-5
entity identifiers, 2-15
fig. dimensions of frame, 4-16, 5-57
fig. unit numbers, 4-16, 5-57
growth, B-5
power unit alarms and feeders, 9-65

protection, B-5, B-7
service ports, B-2
switch module, B-7
switch paths, B-2
DACS III-2000 (2048)
capacity, B-8
entity identifiers, 2-16
fig. dimensions of frame, xviii, 4-17, 5-58
fig. high performance fan unit, 4-41
fig. main controller (MC) module, 4-11
fig. unit numbers, xviii, 4-17, 5-58
growth, B-8
power unit alarms and feeders, 9-66
protection, B-10
service ports, B-2
standard fan unit (ED2C906-30,G1), 4-46
switch module, B-10
switch paths, B-2
DACSlink, 1-4
DACSmate, 1-4
Danger admonishment, meaning of, xxxix
Database
scheduling automatic backups, 8-24
Database backups, 8-17, 8-18, 8-24
Database change capture buffer
default setting, 5-2
provisioning, 5-38
provisioning options, 5-2
retrieving messages, 5-38
Databits
setting, 2-6
Date
setting during acceptance, 4-13
Decision tree
DISKA, DISKB, and SEC failures, 10-2
RTRV-ALM-{EC1|T3} command, 9-7
RTRV-ALM-EQPT command, 9-8, 9-9, 9-10
Deletion
of logins, 2-3
of user IDs, 2-3
Deprovisioning
I/O bays, 5-62
Description
AIS detection (AISDET) circuit packs, B-41
BNC interconnect panel, B-57
bus extender (BUS EXT) circuit packs, B-29, B-41
central processing unit (CPU), B-16
circuit packs, B-12
DS3 PROTN INTFC circuit packs, B-29
DS3 PROTN SW circuit packs, B-40
DS3OUT INTFC module, B-38
dual power feed, B-50
enhanced communications interface (ECI5), B-17
fuse and alarm panel, B-54
fuse board, B-17
input interface module, B-26
input INTFC module, B-28
maintenance interface (MTC2), B-16
memory expansion (MX2), B-16
output INTFC module, B-38
power circuit packs, B-17
PROTN SW circuit packs, B-29
single power feed, B-49
status panel, B-17
STS1 PROTN INTFC circuit packs, B-29
STS1OUT INTFC module, B-38
switch communications interface (SCI, SCI2, SCI3), B-16
switch module, B-33
switch power module, B-46
unit controller (UNIT CONTR3), B-28, B-40
unit interface (UI), B-16
Disk drives
care and handling of, 3-22
Disk surface
fig. exposing on optical cartridge, 8-12
DISKA
failure decision tree for, 10-2
fig. in (2048) main controller (MC) module, 4-11
INT condition type and, 10-1
DISKB
failure decision tree for, 10-2
fig. in (2048) main controller (MC) module, 4-11
INT condition type and, 10-1
Documentation
comments on, xlv
conventions, xxxvii
for Release 4.0, xl
ordering, xliii
typefaces, xxxvii
Drive(s)
disk, 3-22
optical, 3-22
DS3
signal path, B-3
DS3 AISDET, *See* AISDET.
DS3 Bay
convert to STS1, 6-25, 6-36
DS3 circuit packs
adding additional service and, 6-3
DS3 I/O bay
DS3IN INTFC module, B-11
DS3 line monitoring. *See* DS3 line performance monitoring, 5-2
DS3 line performance monitoring, 5-45
canceling reports, 5-50
default setting, 5-2
inhibiting reports, 5-48
provisioning, 5-39
provisioning options, 5-2

scheduling, 5-45
threshold, 5-41
DS3 PROTN SW
circuit packs, B-30, B-40, B-42
description, B-29
function, B-29, B-40
Output INTFC module, B-40
DS3 PROTN SW circuit pack
fig. in DS3OUT INTFC module, 4-8
DS3 service
adding, 6-3
DS3 switch bay
DS3 switch (DS3SW) module, B-11
fuse and alarm panel, B-11
main controller (MC) module, B-11
switch power (SW PWR) module, B-11
DS3IN INTFC circuit pack, B-30
entity identifier (1024), 2-15
entity identifier (2048), 2-16
fig. in DS3IN INTFC module, 4-6
fig. in STS1IN INTFC module, 4-7
DS3IN INTFC module
bus extenders (BUS EXT), B-29
circuit packs, B-26, B-28, B-30
fig. alarm LEDs, 4-6
fig. location in (1024) system, 4-16
fig. location in (2048) system, xviii, 4-17
fig. power LEDs, 4-6
fig. single power feed, 4-6
fig. slot numbers, 4-6
interfaces, B-33
load sharing, 9-58
power, B-49
power unit alarms and equipment relationship on (1024) system, 9-65
protection, B-7, B-10
DS3IN PROTN INTFC
circuit packs, B-29, B-30
DS3IN PROTN INTFC circuit packs, 4-27
DS3OUT INTFC circuit pack, 6-16, 6-19
entity identifier (1024), 2-15
entity identifier (2048), 2-16
fig. in DS3OUT INTFC module, 4-8
line buildout (LBO) and, 3-18
DS3OUT INTFC module
circuit packs, B-38
fig. alarm LEDs, 4-8
fig. location in (1024) system, 4-16
fig. location in (2048) system, xviii, 4-17
fig. power LEDs, 4-8
fig. single power feed, 4-8
fig. slot numbers, 4-8
function, B-38
power unit alarms and equipment relationship on (1024) system, 9-65
power unit alarms and equipment relationship on (2048) system, 9-66
protection, B-7
DS3PROTN INTFC circuit pack
entity identifier (1024), 2-15
entity identifier (2048), 2-16
fig. in DS3IN INTFC module, 4-6
fig. in DS3OUT INTFC module, 4-8
fig. in STS1IN INTFC module, 4-7
DS3PROTN SW circuit pack
fig. in DS3IN INTFC module, 4-6
fig. in STS1IN INTFC module, 4-7
DS3SW CTR circuit pack
entity identifier (1024), 2-15
entity identifier (2048), 2-16
fuses for (1024) system, 9-95
fuses for (2048) system, 9-96
DS3SW module
power unit alarms and equipment relationship on (1024) system, 9-65
power unit alarms and equipment relationship on (2048) system, 9-66
DS3SW PWR module
entity identifier (1024), 2-15
entity identifier (2048), 2-16
load sharing with four 566A circuit packs, 9-63, 9-64
load sharing with two 566A circuit packs, 9-61, 9-62
DS3SWL CTR circuit pack
removal from frame, 3-15
Dual power feed
adding to frame, 6-1
description, B-50
fig. circuit pack location in I/O bays, 9-41
fig. in (1024) switch power (SW PWR) module, 9-42
fig. in (2048) switch power (SW PWR) module, 9-42
on a (1024), B-53
on a (2048), B-53
Duplex setting, 2-6

E

ECI2 circuit pack, 4-3
ECI2. *See* Enhanced communications interface
ECI5 circuit pack, 4-3
ECI5. *See* Enhanced communications interface
ED2C646-30, G14, B-24
ED9C127-30,G1 circuit pack, 4-3
ED9C128-30,G1 circuit pack, 4-3
EDSX for STS-1, 1-2
Eject tool
fig. for optical cartridge, 8-5
Electromagnetic interference (EMI) shields, xl, B-57
status panel, B-18, B-57

Electrostatic discharge (ESD), 3-2
precautions, 3-2
preventing, 3-2
Emergency eject tool
fig. for optical cartridge, 8-5
fig. optical cartridge and use of, 3-31
EMI. *See* Electromagnetic interference (EMI) shields
ENEQ error code, C-2
Engineering Change Procedure
ECP 3-055, 6-1
ECP 3-056, 6-2
Enhanced communications interface
ECI2 circuit packs, B-14
ECI5 circuit packs, B-14, B-17
function, B-17
Enhanced communications interface (ECI)
entity identifier (1024), 2-15
entity identifier (2048), 2-16
fig. in (2048) main controller (MC) module, 4-11
Enhanced status panel, 4-3
fig. in (2048) main controller (MC) module, 4-11
ENMB error code, C-2
ENMD error code, C-2
ENRE error code, C-2
Entering commands
using command mode, 2-19
using menu/prompt mode, 2-19
Entity identifiers
DACS III-2000 (1024) system, 2-15
DACS III-2000 (2048) system, 2-16
Equipment
optional for (1024), B-57
optional for (2048), B-57
provisioning, 5-53
Equipment code
TTY adaptors, B-24
EQWT error code, C-2
ERLC error code, C-2
Error codes
definition of, C-1
description of, C-1
grouped by condition, C-1
Errors
how identified, 9-2
ESD. *See* Electrostatic discharge (ESD), 3-2
EXTERR condition type, 9-78

F

FA. *See* Fuse and alarm panel, D-2
Facilities provisioning, 5-55
Fan filter
COMCODE for high performance fan filter, 9-36
COMCODE for standard fan unit filter, 8-26
fig. location on high performance fan unit, 4-41
fig. location on standard fan unit, 4-46
replacing on high performance fan unit (ED9C130-30,G3), 9-34
replacing on standard fan unit, 8-26
Fan speed toggle switch
fig. location on standard fan unit (ED2C906-30,G1), 4-46
Fan unit, B-54
alarms, B-54
high performance, B-54
Fan unit(s), 8-26
alarm LEDs, 4-20
entity identifier (2048), 2-16
fig. high performance fan unit, 4-41
fig. location in (2048) system, xviii, 4-17
fig. standard (ED2C906-30,G1), 8-27
fig. standard fan unit (ED2C906-30,G1), 4-46
fuse relationship, 9-32, 9-35
fuse relationship on high performance unit (ED9C130-30,G3), 9-35
high performance, xl
high performance fan unit (ED9C130-30,G3), 9-34
INT condition type on high performance fan unit (ED9C130-30,G3), 9-34
INT condition type on standard fan unit (ED2C906-30,G1), 9-31
maintenance on high performance fan unit (ED9C130-30,G3), 9-34
maintenance on standard, 8-26
replacing, 6-1
standard (ED2C906-30,G1), 8-26
testing during acceptance, 4-40
Fault isolation
default setting, 5-2
provisioning, 5-56
provisioning options, 5-2
FB. *See* Fuse board, D-2
FBA circuit pack, B-46
DS3SW CTR fuse chart for (1024), 9-94
LEDs, 9-93
FBB circuit pack, B-46
DS3SW CTR fuse chart for (1024), 9-94
LEDs, 9-93
FBE circuit pack, B-14, B-17, B-49
fuse designations for (1024) and (2048) systems, 9-91
Features
Alarm indication signal detection (AISDET), 5-2
alternate maps, 5-9
command verification, 5-2, 5-34
DACSmate and DACSlink, 1-4
database capture buffer, 5-38
database change capture buffer, 5-2
DS3 line performance monitoring, 5-2
EDSX for STS-1, 1-2

fault isolation, 5-2
improved alarm reporting, 1-4
increased alternate map capability, 1-5
increased UID length, 1-5
LED indication for manual protection, 5-2
list of Release 4.0, 1-1
STS-1 cross-connects, 1-2
STS1 section performance monitoring, 5-2
test access auto-release, 5-70
Frame
fig. dimensions of (1024) frame, 4-16
fig. dimensions of (2048) frame, xviii, 4-17
Frame alarms
testing during acceptance, 4-22
Frame audits
error detection and, 9-2
Frame modification
adding AISDET circuit packs, 6-16
adding circuit packs, 6-3
adding craft interface terminals, 6-14
adding DS3 service, 6-3
adding DS3OUT circuit packs, 6-19
adding dual power feed, 6-1
adding I/O bay(s), 6-1
adding secondary storage subsystem, 6-2
adding STS1 service, 6-3
deprovisioning I/O bay(s), 5-62
loading new release, 6-1
provisioning I/O bay(s), 5-57
removing AISDET circuit packs, 6-19
removing craft interface terminals, 6-15
removing DS3OUT circuit packs, 6-16
removing existing PRI and SEC, 6-2
removing single power feed, 6-1
replacing fan units, 6-1
FRD condition type, 9-79
Function
PROTN SW circuit packs, B-29
Function of
main controller (MC) module, B-3
Functional diagram
input INTFC module, B-27
main controller (MC) module, B-20
output INTFC module, B-39
switch module, B-34
Fuse and alarm panel
description, B-54
fig. location in (1024) system, 4-16
fig. location in (2048) system, xviii, 4-17
indicators, B-49, B-50
on a (1024), B-49
on a (2048), B-50
power, B-54
Fuse board
FBA circuit pack, B-46
FBB circuit pack, B-46
FBE circuit pack, B-14, B-17, B-49, B-50
function, B-17
main controller module, B-17
power, B-49
Fuses
blown primary on BUS E, 9-82
blown primary on other buses, 9-83
blown secondary in main controller (MC) module, 9-91
blown secondary in switch power (SW PWR) module, 9-93
codes for main controller (MC) module circuit packs, 9-91
fan units and, 9-32, 9-35
for high performance fan unit (ED9C130-30,G3), 9-35
for standard fan units (ED2C906-30,G1), 9-32
in main controller (MC) module, 9-91
values for main controller (MC) module circuit packs, 9-91

G

Generic. *See* Release, 6-1

H

High performance fan unit (ED9C130-30,G3), xl
fig. frame location and LEDs, 4-41
INT condition type and, 9-34
maintenance, 9-34
procedure for testing, 4-41
testing during acceptance, 4-41
HITEMP condition type, 9-81

I

I/O bay
entity identifier (1024), 2-15
entity identifier (2048), 2-16
input INTFC module, B-11
output INTFC module, B-11
IBEX error code, C-2
IBMS error code, C-2
IBNC error code, C-2
ICNC error code, C-2
ICNV error code, C-2
IDMS error code, C-2
IDNC error code, C-2

IDNV error code, C-2
IDRG error code, C-2
IISP command acknowledgment, 2-17
IISP error code, C-2
IITA error code, C-2
Indicators
  on fuse and alarm panel, B-49, B-50
Initialization
  of system during acceptance, 4-12
Input commands. *See* Commands, 2-14
Input interface module
  bus extenders, B-29
  function, B-26
  power, B-49
Input INTFC module
  circuit packs, B-26, B-28, B-30
  functional diagram, B-27
  power, B-50
  protection, B-7, B-10
  PROTN SW circuit packs, B-29
Input module
  interfaces, B-33
Input port
  fig. connected to test port, 7-11
Input power
  entity identifier (1024), 2-15
  entity identifier (2048), 2-16
Input/output (I/O) bays
  adding, 6-1
  checking during acceptance, 4-4
  fig. bay numbers on (1024), 5-57
  fig. bay numbers on (2048), 5-58
  fig. numbering scheme (1024), 4-16
  fig. numbering scheme (2048), xviii, 4-17
  provisioning, 5-57
  provisioning during acceptance, 4-16
  removal of, 5-62
Insertion of
  DS3SWL CTR circuit packs, 3-4, 3-9
  Input, Output, DS3SW, PRI3, SEC3 circuit packs, 3-4
  main controller (MC) module circuit packs, 3-4, 3-16
  optical cartridges, 3-27
Installation Procedures Reference Manual (IPRM), 6-1
INT condition type
  on a link, 9-23
  on DISKA, DISKB, and SEC, 10-1
  on DS3SW circuit packs, 9-25, 9-27
  on DS3SWL circuit packs, 9-25
  on high performance fan unit (ED9C130-30.G3), 9-34
  on main controller (MC) module, 9-23
  on PWRA (522A) circuit packs, 9-38
  on PWRA2 (566A) circuit packs, 9-40, 9-43
  on PWRB circuit packs, 9-67
  on PWRC circuit pack, 9-67
  on PWRD circuit packs, 9-67
  on standard fan unit (ED2C906-30,G1), 9-31
  on unit controller (UNIT CONTR3), 9-69
Interconnection panel, 6-12
  fig. location in (1024) system, 4-16
  fig. location in (2048) system, xviii, 4-17
Interface connector panel
  fig. TTY connectors, 2-7
Interfaces
  DS3IN INTFC module, B-33
  input module, B-33
  Output INTFC module, B-45
  STS1IN INTFC module, B-33
IPEX error code, C-2
IPMS error code, C-2
IPNC error code, C-2
IPNV error code, C-2
ISCH error code, C-2
ISO-9000, 1-5
ISPC error code, C-2

K

KS-19224,L2 cable, 9-13, 9-14

L

Lamp Test switch, B-18
LAN. *See* Local Area Network (LAN)
LBO. *See* Line buildout (LBO), 3-18
LED TEST button
  fig. location on high performance fan unit, 4-41
LED TEST switch, B-18
LEDs
  ACO, B-18
  CRITICAL, B-17
  error detection and, 9-2
  FAILURE, B-18
  main controller module status panel, B-17
  MAJOR, B-17
  test sequence, 4-20, 5-59
  testing, 4-19
Lens
  fig. cleaning of on optical drive, 8-7
Lens cleaning
  fig. kit for optical drive, 8-11
Lens cleaning cartridge
  fig. for optical drive, 8-8
  fig. insertion into optical drive, 8-9
Lens of optical drive
  cleaning, 8-3

Line buildout (LBO), 3-18
cable length limitations for DSX-3 connections, 9-13
cable length limitations for terminal equipment connections, 9-14
cable types for DSX-3 connections, 9-13
cable types for terminal equipment connections, 9-14
connections to DSX-3 and, 9-13
fig. IN Settings, 9-16
fig. IN settings, 3-21, 6-9
fig. OUT settings, 3-20, 6-8, 9-15
settings, 3-18, 6-3
settings for DSX-3 connections, 9-13
settings for terminal equipment connections, 9-14
Line performance monitoring. *See* DS3 line performance monitoring, 5-2
Line-AIS. *See* Line-Alarm indication signal (Line-AIS)
Line-Alarm indication signal (Line-AIS)
Link administration
changing passwords, 2-3
changing user IDs, 2-3
printer settings, 2-6
tasks of, 2-1
terminal settings, 2-6
user IDs and, 2-2
Link baud rate
changes to, 2-7
Links
baud rates, B-22
electrical connections, B-22
function, B-22
protocol, B-22
Load sharing
DS3IN INTFC module, 9-60
DS3OUT INTFC module, 9-58
DS3SW PWR module with four 566A circuit packs, 9-63
DS3SW PWR module with four 566A circuit packs, 9-64
DS3SW PWR module with two 566A circuit packs, 9-61, 9-62
STS1IN INTFC module, 9-60
STS1OUT INTFC module, 9-58
Local Area Network (LAN), B-20
Lock
fig. on PWRA2 EXT (567A) circuit packs, 9-52
LOF. *See* Loss-of-Frame (LOF), D-3
Logins
changing, 2-3, 2-4
creating, 2-2
deleting, 2-3
Logoffs
over Snider link, 2-11
over X.25 link, 2-11
Logons
over Snider link, 2-11
over X.25 link, 2-11, 2-12
Loopback cross-connections, 5-33
operating, 7-18
releasing, 7-19
when to use, 7-18
Loss-of-Frame (LOF), B-41
Loss-of-Signal (LSSIG), B-29
LSSIG. *See* Loss-of Signal (LSSIG), D-3

M

M priority action code, 2-18
Magnetic media
precautions, 3-22
Main controller (MC) module
blown secondary fuse, 9-91
central processing unit (CPU), B-16
circuit pack abbreviations, B-14
circuit pack failures, 9-23
circuit pack quantities, B-14
enhanced communications interface (ECI2), B-17
enhanced communications interface (ECI5), B-17
entity identifier (1024), 2-15
entity identifier (2048), 2-16
fig. location in (1024) system, 4-16
fig. location in (2048) system, xviii, 4-11, 4-17
functional diagram, B-20
functions, B-3, B-13
fuse board (FBE), B-17
fuses on (1024) system, 9-91
fuses on (2048) system, 9-91
internal communications, B-20
list of circuit packs, B-14
maintenance interface (MTC2), B-16
memory expansion (MX2), B-16
power, B-49
power circuit packs, B-17
power entity identifier (1024), 2-15
power entity identifier (2048), 2-16
replacing circuit packs, 3-16
status panel, B-17
switch communications interface (SCI,SCI2,SCI3), B-16
system interface, B-20
unit interface (UI), B-16
Main power circuit breaker
fig. location on standard fan unit, 4-46
Maintenance
frequency, 8-1
preventive schedule, 8-1
standard fan unit (ED2C906-30,G1), 8-26
Maintenance (MTC) interface circuit pack
entity identifier (1024), 2-15
entity identifier (2048), 2-16
fig. in (2048) main controller (MC) module, 4-11
MTC2 circuit packs, 4-3

Maintenance interface, B-14
function, B-16
MTC circuit packs, B-14
MTC2 circuit packs, B-14
MAN condition type, 9-73
Manual backups
release, 8-18
Manual protection indicator
default setting, 5-2
provisioning options, 5-2
Media validation
entering command for, 5-67
information provided with, 5-66
provisioning, 5-66
use of, 5-66
Memory backups
command format, 8-17
Memory expansion
MX2 circuit packs, B-14, B-16
Memory expansion (MX) circuit pack
entity identifier (1024), 2-15
entity identifier (2048), 2-16
fig. in (2048) main controller (MC) module, 4-11
Menu/prompt mode, 2-19, 5-34
entering, 2-20
on-line help, 2-21
screen sequence, 2-20
structure, 2-19
MERR error code, C-2
Message sets
provisioning, 5-68
Messages
error codes, 2-18
function of, 2-14
header, 2-18
primary line, 2-18
priority action codes, 2-18
secondary lines, 2-18
typeface used for, xxxvii
MISC [1] condition type, 9-75
MISC [100] condition type
on DS3SW circuit packs, 9-25, 9-27
on DS3SWL circuit packs, 9-25
MJ alarm notification code, 9-2
MN alarm notification code, 9-2
Mode setting, 2-6
Modes
command, 5-34
command verification, 5-34
menu/prompt, 2-19, 2-20, 2-21, 5-34
Modules
and related bays, B-11
defined, B-11
Monitor (MON) test access, 7-1
conversion from split (SPLT) test access, 7-14
disconnecting, 7-15
Monitoring. *See* DS3 line performance monitoring, 5-2
Monitoring. *See* STS1 section performance monitoring, 5-2
MTC2. *See* Maintenance (MTC) interface circuit pack, 4-3
MTC2. *See* Maintenance interface
Multiple port (conference) broadcast
preventing, 5-28
MX2 circuit pack. *See* Memory expansion
MX2 circuit pack. *See* Memory expansion (MX) circuit pack, 4-3

N

NA alarm notification code, 9-2
NA command acknowledgment, 2-17
NG command acknowledgment, 2-17
Notification codes
CL, 9-2
CR, 9-2
MJ, 9-2
MN, 9-2
NA, 9-2

O

One-way cross-connections
retrieving, 5-18, 6-27, 6-38
Optical cartridge(s)
automatic backups to, 8-24
care and handling of, 3-22
cleaning, 8-11
description, 3-25
fig. attaching turning knob for cleaning, 8-13
fig. back view of shutter, 3-26
fig. back views, 3-26
fig. cleaning disk surface, 8-15
fig. disk surface, 3-26
fig. exposing disk surface, 8-12
fig. front view, 3-24
fig. insertion of, 3-28
fig. lens cleaning kit, 8-11
fig. removal of, 3-32, 8-6
fig. rotating turning knob for cleaning, 8-14
fig. use of emergency eject tool, 3-31
fig. write-protect tab in ON position, 3-26
*fig.*write-protect tab in OFF position, 3-26
for backing up the release, 8-18
insertion, 3-27
removal, 3-27
write-protect tab, 3-25

Optical drive (SEC)
care and handling of, 3-22
decision tree for failures, 10-2
fig. active (in use) LED shown in SEC3 circuit pack, 3-28
fig. eject button shown in SEC3 circuit pack, 3-28
fig. in SEC3 circuit pack, 3-28
fig. inserting lens cleaning cartridge, 8-9
fig. lens cleaning, 8-7
HITEMP condition type and, 9-81
INT condition type and, 10-1
lens cleaning, 8-3
Optical drive lens cleaning cartridge
fig. shutter closed, 8-7
fig. shutter open, 8-8
Optional hardware
list of, B-57
Ordering documentation, xliii
Output INTFC module
AISDET circuit packs for DS3, B-41
bus extenders, B-41
circuit packs, B-38, B-40, B-42
DS3 AISDET circuit packs, B-41
DS3 PROTN SW circuit packs, B-40
function, B-38
functional diagram, B-39
interfaces, B-45
power, B-49, B-50
protection, B-7, B-10
UNIT CONTR3, B-40
Output messages. *See* Messages, 2-18
Output power
entity identifier (1024), 2-15
entity identifier (2048), 2-16

P

PAINTGRT condition type, 11-1, 1
special considerations, 9-5
Parameters
for alarm code, 9-2
for alarm notification code, 9-2
list of, for alarms, 9-2
when optional, xxxvii
when required, xxxvii
when to enter as shown, xxxvii
Passwords
changing, 2-3, 2-4
Path integrity. *See* PAINTGRT condition type, 9-5
performance monitoring
inhibiting reports, 5-48
Performance monitoring. *See* DS3 line performance monitoring, 5-2
Performance monitoring. *See* STS1 section performance monitoring, 5-2
PF command acknowledgment, 2-17
PICC error code, C-2
PIFC error code, C-2
PIOC error code, C-2
PIPW error code, C-3
PIRC error code, C-3
PIUC error code, C-3
PIUI error code, C-3
Power
and fuses, 9-32
and fuses for high performance fan unit (ED9C130-30,G3), 9-35
auxiliary, 9-32, 9-35
fig. high performance fan unit power LEDs, 4-41
fig. power LEDs in DS3IN INTFC module, 4-6
fig. power LEDs in DS3OUT INTFC module, 4-8
fig. power LEDs in STS1IN INTFC module, 4-7
fig. power LEDs in STS1OUT INTFC module, 4-9
fig. standard fan unit power LED, 4-46
input interface module on (1024), B-49
input interface module on (2048), B-50
main, 9-32, 9-35
main controller (MC) module on (1024), B-49
output interface module on (1024), B-49
output interface module on (2048), B-50
switch power module on (1024), B-49
switch power module on (2048), B-50
Power buses
on a (1024), B-49
Power circuit packs
function, B-17
in main controller module, B-17
PWRA, B-30, B-42, B-46
PWRA2, B-30, B-42, B-46
PWRA2 EXT, B-30, B-42, B-46
PWRB, B-14, B-17, B-49, B-50
PWRC, B-14, B-17, B-49, B-50
PWRD, B-14, B-17, B-49, B-50
Power feed description
dual, B-50
fig. single power feed in DS3IN INTFC module, 4-6
fig. single power feed in DS3OUT INTFC module, 4-8
fig. single power feed in STS1IN INTFC module, 4-7
fig. single power feed in STS1OUT INTFC module, 4-9
on a (1024), B-49, B-51, B-53
on a (2048), B-50, B-51, B-53
single, B-49
Power feed specifications
description, B-49
Power feeders
alarms on DACS III-2000 (1024) and, 9-65
Power modules
switch power module (1024), B-46
switch power module (2048), B-48
Power unit alarms
feeders on (2048) system and, 9-66

Precautions
against electrostatic discharge (ESD), 3-2
with disk drive, 3-22
with optical cartridges, 3-22
with optical drive, 3-22
PRI3 circuit pack, 4-3
fig. in (2048) main controller (MC) module, 4-11
verification of spares, 3-33
PRIMARY
entity identifier (1024), 2-15
entity identifier (2048), 2-16
Printers
700 series terminals and, 2-6
options, 2-6
settings, 2-6
Priority action code
*, 2-18
**, 2-18
*C, 2-18
A, 2-18
for messages, 2-18
M, 2-18
Product safety labels, xxxix
Protection ratios
(1024) size, B-7
(2048) size, B-10
Protection switch
description, B-29
function, B-29
Protection switching
testing during acceptance, 4-32
PROTN SW
input INTFC module, B-29
PROTN SW circuit packs, B-29
Protocol
asynchronous, B-22
Snider, B-22
synchronous, B-22
TABS/TBOS, B-22
X.25, B-22
Provisioning
alarm indication signal detection (AISDET), 5-4
circuit connections, 5-16
command verification, 5-34
database capture buffer, 5-38
DS3 line performance monitoring, 5-39
equipment, 5-53
facilities, 5-55
fault isolation, 5-56
features and system components listed, 5-1
I/O bays, 5-57
message sets, 5-68
STS1 section performance monitoring, 5-39
test access auto-release, 5-70
Provisioning group, 6-3
PWRA (552A) circuit pack
failures of, 9-38
fig. in DS3IN INTFC module, 4-6
fig. in DS3OUT INTFC module, 4-8
fig. in STS1IN INTFC module, 4-7
fig. in STS1OUT INTFC module, 4-9
PWRA circuit pack, B-42, B-46
PWRA circuit packs, B-30
PWRA2 (566A) circuit pack
INT condition type on, 9-40
PWRA2 circuit pack, B-42, B-46
PWRA2 circuit packs, B-30
PWRA2 EXT circuit pack, B-42, B-46
PWRA2 EXT circuit packs, B-30
PWRB circuit pack, B-17
failures of, 9-67
PWRB circuit packs, B-14, B-49, B-50
PWRC circuit pack, B-17
failures of, 9-67
fig. in (2048) main controller (MC) module, 4-11
PWRC circuit packs, B-14, B-49
PWRD circuit pack, B-17
failures of, 9-67
fig. in main controller (MC) module, 4-11
PWRD circuit packs, B-14, B-49, B-50

Q

Quantities
input module circuit packs, B-30
Output INTFC module circuit packs, B-42

R

Release
backup of, 8-18
loading new, 6-1
Release 4.0
benefits, 1-1
classes, xlii
courses, xlii
documentation, xl
features, 1-1
Remote reset connector, B-25
Removal
DS3SWL CTR circuit packs, 3-4
fig. of optical cartridge, 8-6
Input, Output, DS3SW, PRI3, SEC3 circuit packs, 3-4
main controller (MC) module circuit packs, 3-4, 3-16
of circuit packs, 3-4
of optical cartridges, 3-30, 8-5

Reports
allowing, 5-48
DS3 line performance monitoring, 5-45
error detection and, 9-2
inhibiting, 5-48
scheduling, 5-45
STS1 section performance monitoring, 5-45
REPT CMPR MEM
responding to messages, 9-98
REPT EXCPTN SYS
corrective procedure, 9-100
message, 9-99, 9-100
RESET button
fig. location on high performance fan unit, 4-41
fig. location on standard fan unit, 4-46
RESET ENABLE switch, B-18
RESET switch, B-18
Returns
of circuit packs, 3-45
RL command acknowledgment, 2-17
Rollover cross-connections
retrieving, 5-24

S

SAAL error code, C-3
SAAS error code, C-3
SABT error code, C-3
SACC error code, C-3
SADC error code, C-3
Safety
caution admonishment, xxxix
danger admonishment, xxxix
warning admonishment, xxxix
Safety labels
meanings, xxxix
symbol, xxxix
SAIN error code, C-3
SAIS error code, C-3
SAOS error code, C-3
SAPS error code, C-3
SAPV error code, C-3
SARB error code, C-3
SARL error code, C-3
SAWS error code, C-3
SCI3. *See* Switch communications interface
SDIN error code, C-3
SDNC error code, C-3
SDNR error code, C-3
SDUN error code, C-3
SEC (optical drive)
decision tree for failures, 10-2
entity identifier (1024), 2-15
entity identifier (2048), 2-16
fig. in main controller (MC) module, 4-11
fig. insertion of optical cartridge, 3-28
HITEMP condition type and, 9-81
INT condition type and, 10-1
SEC3, B-14
SEC3 circuit pack, 4-3
fig. in (2048) main controller (MC) module, 4-11
verification of spares, 3-33
Secondary memory
entity identifier (1024), 2-15
entity identifier (2048), 2-16
Secondary storage
entity identifier (1024), 2-15
entity identifier (2048), 2-16
Secondary storage controller (SSC)
entity identifier (1024), 2-15
entity identifier (2048), 2-16
fig. in (2048) main controller (MC) module, 4-11
SSC3 circuit pack, 4-3
Secondary storage controller (SSC3), B-14
Secondary storage subsystem
storage devices, B-16
Section performance monitoring. *See* STS1 section performance monitoring, 5-2
Security
audit, 2-22
Security audit feature, 2-22
management of, 2-22
Service ports
DACS III-2000 (1024), B-2, B-5
DACS III-2000 (2048), B-2, B-8
SETP error code, C-3
Setting line buildout, 6-3
Settings for
answerback, 2-6
baud rate, 2-6
databits, 2-6
duplex, 2-6
SFCP error code, C-3
SFDG error code, C-3
SFFR error code, C-3
Signal path
of DS3, B-3
of STS-1, B-3
Signal transmission
problems with, 9-102
Single power feed
552A circuit pack, 9-38
description, B-49
fig. in DS3IN INTFC module, 4-6
fig. in DS3OUT INTFC module, 4-8
fig. in STS1IN INTFC module, 4-7
fig. in STS1OUT INTFC module, 4-9
on a (1024), B-49

on a (2048), B-50
removing from frame, 6-1
Size
fig. dimensions of (1024) frame, 4-16, 5-57
fig. dimensions of (2048) frame, xviii, 4-17, 5-58
SLBM error code, C-3
SLEM error code, C-3
SMPG error code, C-3
SMVF error code, C-3
SNAS error code, C-3
SNBS error code, C-3
SNCC error code, C-3
Snider links
checking during acceptance, 4-14
Snider protocol, B-22
SNIS error code, C-3
SNOS error code, C-3
SNPG error code, C-3
SNPV error code, C-3
SNST error code, C-3
SNVS error code, C-3
Software
loading during acceptance, 4-12
Software Release Description (SRD), 6-1
Software releases
backup of, 8-18
SOSF error code, C-3
SOST error code, C-3
Spare circuit packs
verifying PRI3 circuit pack, 3-33
verifying SEC3 circuit pack, 3-33
SPFA error code, C-3
Split (SPLT) test access, 7-1
conversion to monitor (MON) test access, 7-14
fig., 7-13
SPOS error code, C-3
SRID error code, C-3
SRMI error code, C-4
SRNA error code, C-4
SROF error code, C-4
SSRE error code, C-4
SSTP error code, C-4
Standard fan unit (ED2C906-30,G1)
fig., 8-27
fig. frame location and LEDs, 4-46
INT condition type, 9-31
maintenance, 8-26
procedure for testing, 4-40, 4-47
testing during acceptance, 4-46
Status panel, B-14, B-17
Abnormal LED, B-18
ACO indicator, B-18
ACO switch, B-18
CRITICAL LED, B-17
EMI shields, B-18, B-57
LED TEST switch, B-18
LEDs, B-17
main controller module FAILURE LED, B-18
MAJOR LED, B-17
Minor LED, B-17
RESET ENABLE switch, B-18
RESET switch, B-18
TTY connectors, B-18, B-22
STS-1
signal path, B-3
STS1 bay
convert to DS3, 6-25, 6-36
STS1 circuit packs
adding additional service and, 6-3
STS-1 cross-connects, 1-2
STS1 I/O bay
STS1IN INTFC module, B-11
STS1 INTFC module
bus extenders, B-29
circuit packs, B-30
protection, B-7
STS1 PROTN INTFC
circuit packs, B-29
STS1 PROTN INTFC circuit pack
fig. in STS1OUT INTFC module, 4-9
STS1 PROTN SW
description, B-29
function, B-29
STS1 PROTN SW circuit pack
fig. in STS1OUT INTFC module, 4-9
STS1 PROTN SW circuit packs, B-30
STS1 section monitoring. *See* STS1 section performance monitoring, 5-2
STS1 section performance monitoring, 5-45
canceling reports, 5-50
default setting, 5-2
inhibiting reports, 5-48
provisioning, 5-39
provisioning options, 5-2
scheduling, 5-45
STS1 service
adding, 6-3
STS1IN INTFC circuit pack, B-30
entity identifier (1024), 2-15
entity identifier (2048), 2-16
STS1IN INTFC module
circuit packs, B-26, B-28
fig. location in (1024) system, 4-16
fig. location in (2048) system, xviii, 4-17
fig. power LEDs, 4-7
fig. single power feed, 4-7
fig. slot numbers, 4-7
interfaces, B-33
load sharing, 9-58
power, B-49
protection, B-10

STS1IN PROTN INTFC circuit packs, 4-27, B-30
STS1OUT INTFC circuit pack
entity identifier (1024), 2-15
entity identifier (2048), 2-16
fig. in STS1OUT INTFC module, 4-9
line buildout (LBO) and, 3-18
STS1OUT INTFC module
circuit packs, B-38
fig. alarm LEDs, 4-9
fig. location in (1024) system, 4-16
fig. location in (2048) system, xviii, 4-17
fig. single power feed, 4-9
fig. slot numbers, 4-9
function, B-38
protection, B-7
STS1PROTN INTFC circuit pack
entity identifier (1024), 2-15
entity identifier (2048), 2-16
SUNA error code, C-4
Support
technical, xliii
training, xlii
SW PWR module, B-46, B-48
circuit packs, B-46
power, B-49, B-50
SWFA error code, C-4
Switch (DS3SW) module
fig. location in (1024) system, 4-16
fig. location in (2048) system, xviii, 4-17
Switch bays
checking during acceptance, 4-10
Switch communications interface
function, B-16
SCI circuit packs, B-14
SCI2 circuit packs, B-14
Switch communications interface (SCI)
entity identifier (1024), 2-15
entity identifier (2048), 2-16
fig. in (2048) main controller (MC) module, 4-11
Switch module
function, B-33
functional diagram, B-34
Switch paths
DACS III-2000 (1024), B-2, B-5
DACS III-2000 (2048), B-2, B-8
Switch power (SW PWR) module
blown secondary fuse, 9-93
entity identifier (1024), 2-15
entity identifier (2048), 2-16
fig. location in (1024) system, 4-16
fig. location in (2048) system, xviii, 4-17
Switched Virtual Circuit (SVC), 9-79
Switches
ACO, B-18
Lamp Test, B-18
LED TEST, B-18
RESET, B-18
RESET ENABLE, B-18
Synchronous protocol, B-22
System
growth of (1024), B-6
growth of (2048), B-9
System acknowledgments, 2-17
System administrator, xxxiii, xxxiv
changing other parameters, 2-4
changing other parameters IDs, 2-3
changing passwords, 2-3, 2-4
changing user IDs, 2-3, 2-4
controlling access to system, 2-11
replacing PRI3 and SEC3 circuit packs and, 3-16
System bus, B-20
System date
setting during acceptance, 4-13
System errors
how identified, 9-2
System identification. *See* Media validation, 5-66
System login
on Snider link, 2-11
on X.25 link, 2-11
X.25 link, 2-12
System logoff
on Snider link, 2-11
System output. *See* Messages, 2-18
System problems
alarms and, 9-3
System size
fig. dimensions of (1024) frame, 4-16
System time
setting during acceptance, 4-13

T

TABS/TBOS protocol, B-22
Telemetry
testing during acceptance, 4-35
Terminal baud rate
changes to, 2-7, 2-9
Terminal settings, 2-6
Terminals. *See* Craft interface terminal, 6-14
Test access auto-release
provisioning, 5-70
Test connections
disconnecting monitor test, 7-15
monitor test access, 7-1
split test access, 7-1
Test port
fig. connected to input port, 7-11
Test sequence
LEDs, 4-20

Test sets
connecting to incoming circuits, 7-2
disconnecting from incoming circuit, 7-4
disconnecting from outgoing circuit, 7-8
Thresholds
bipolar violations (BPV), 5-44
line performance monitoring, 5-41
Time
setting during acceptance, 4-13
Time lockout
initial value, 9-79
Time-of-day clock (TODC)
condition type for, 9-77
information stored in, 9-77
problems with, 9-77
TODC condition type, 9-77
Tools
fig. eject tool for optical cartridge, 8-5
Training
courses, xlii
for Release 4.0, xlii
Transmission
problems with signals and, 9-102
TTY adaptors, B-24
recommendation, B-24
TTY connectors, 4-14, B-18, B-22
fig. positions in interface connector panel, 2-7
Two-way cross-connections
retrieving, 5-21
Typeface, conventions, xxxvii

U

UI. *See* Unit Interface (UI)
Unit
entity identifier (1024), 2-15
entity identifier (2048), 2-16
Unit controller (UNIT CONTR3), B-28
and DS3IN or DS3OUT INTFC circuit packs with INT condition type, 9-70
and STS1IN or STS1OUT INTFC circuit packs with INT condition type, 9-70
circuit packs, B-42
entity identifier (1024), 2-15
entity identifier (2048), 2-16
fig. in DS3IN INTFC module, 4-6
fig. in STS1IN INTFC module, 4-7
function, B-28, B-40
input INTFC module, B-28
INT condition type and, 9-69
Output INTFC module, B-40
Unit controller (UNIT CONTR3) circuit packs, B-30
Unit interface (UI), B-14, B-16
entity identifier (1024), 2-15
entity identifier (2048), 2-16
fig. in (2048) main controller (MC) module, 4-11
function, B-16
Unit numbers
fig. on (1024) system, 4-16, 5-57
fig. on (2048) system, xviii, 4-17, 5-58
Upgrade procedure
where found, 6-1
User ID (UID) length, 1-5
User IDs
changing, 2-3, 2-4
creating, 2-2
deleting, 2-3
User input, typeface used for, xxxvii
User privilege code (UPC)
assigning, 2-2
changing, 2-3
for creating user IDs, 2-2
for deleting user IDs, 2-2

V

Verification
of command execution, 5-2, 5-34, 5-36
of spare circuit packs, 3-33
of system components during acceptance, 4-2
Visual inspection
during acceptance, 4-2

W

Warning admonishment, meaning of, xxxix
Write-protect tab
fig. from back of optical cartridge, 3-26
fig. from front of optical cartridge, 3-24
fig. in OFF position on optical cartridge, 3-26
fig. in ON position on optical cartridge, 3-26

X

X.25 link
logging on, 2-12
X.25 protocol, B-22