Lucent Technologies
Bell Labs Innovations

Metropolis® Enhanced Optical Networking (EON) (OLS 40G/80G)

Release 8.2

Applications and Planning Guide (APG)

365-575-558 R8.2
Issue 3
March 2002

Copyright © 2002 Lucent Technologies. All Rights Reserved.

This material is protected by the copyright laws of the United States and other countries. It may not be reproduced, distributed, or altered in any fasany entity (either internal or external to Lucent Technologies), except in accordance with applicable agreements, contracts or licensing, without the express written consent of Lucent Technologies and the business management owner of the material.

For permission to reproduce or distribute, please contact the following: your Account Executive

Notice

The information in this document is subject to change without notice. Although every effort has been made to make this document as accurate, complete, and clear as possible, Lucent Technologies and its predecessors assume no responsibility for any errors that may appear in this document.

Mandatory customer information

Federal Communications Commission (FCC) Notification and Repair Information

This equipment is designed to comply with the limits for a Class A digital device, pursuant to Part 15 of the FCC Rules. These limits are designed to provide reasonable protection against harmful interference when the equipment is operated in a commercial environment. This equipment generates, uses, and can radiate radio frequency energy and, if not installed and used in accordance with the instructions manual, may cause interference to radio communications. Operation of this equipment in a residence is likely to cause harmful interference, in which case, the user will be required to correct the interference at his own expense.

Security

In rare instances, unauthorized individuals make connections to the telecommunications network. In such an event, applicable tariffs require that the customer pay all network charges for traffic. Lucent Technologies and its predecessors cannot be responsible for such charges and will not make any allowance or give any credit for charges that result from unauthorized access.

Trademarks

3Com is a registered trademark of 3Com Corporation.

5ESS, LGX, Metropolis, SLC, ST, and WaveStar are registered trademarks of Lucent Technologies, Inc.

Adobe and Acrobat are registered trademarks of Adobe Systems, Inc.

CLEI, CLLI, CLCI, and CLFI are trademarks of Telcordia Technologies, Inc.

COMMON LANGUAGE is a registered trademark of Telcordia Technologies, Inc.

CSA is a registered trademark of Canadian Standards Association.

Ethernet is a trademark of Xerox Corporation USA.

IBM is a registered trademark of International Business Machines Corporation.

Intel and Pentium are registered trademarks of Intel Corporation.

Navis is a trademark of Lucent Technologies, Inc.

Reader (Adobe Acrobat Reader) is a trademark of Adobe Systems, Inc.

UL is a registered trademark of Underwriters Laboratories Inc.

Windows, Windows NT, MS-DOS, and Microsoft are registered trademarks of Microsoft Corporation.

Ordering information

To order more copies of this document or other Lucent documents, please contact the Customer Information Center (CIC) at www.lucentdocs.com

Support

Technical support

For SONET technical assistance, call 1-866-LUCENT8 (866-582-3688), prompt 1. The Lucent Technologies North American Regional Technical Assistance Center (NARTAC) provides a technical assistance telephone number that is monitored 24 hours a day.

For SDH technical assistance, call Technical Support Services (TSS) at +1-630-224-4672: Prompt 2.

Information product support

You can also call these telephone numbers to provide comments on Metropolis® EON or to suggest enhancements

This document was developed by the Lucent Learning Organization (LLO).

Lucent Technologies values your comments!

Lucent Technologies
Bell Labs Innovations

Metropolis® Enhanced Optical Networking (EON) Applications and Planning Guide (APG) Release 8.2

365-575-558 R8.2 Issue 3 Date: March 2002

Lucent Technologies welcomes your comments on this information product. Your opinion is of great value and helps us to improve.

1. Was the information product:

	Yes	*No*	*Not applicable*
In the language of your choice?	☐	☐	☐
In the desired media (paper, CD-ROM, etc.)?	☐	☐	☐
Available when you needed it?	☐	☐	☐

Please provide any additional comments:

_____

_____

2. Please rate the effectiveness of this information product:

	Excellent	*More than satisfactory*	*Satisfactory*	*Less than satisfactory*	*Unsatisfactory*	*Not applicable*
Ease of use	☐	☐	☐	☐	☐	☐
Level of detail	☐	☐	☐	☐	☐	☐
Readability and clarity	☐	☐	☐	☐	☐	☐
Organization	☐	☐	☐	☐	☐	☐
Completeness	☐	☐	☐	☐	☐	☐
Technical accuracy	☐	☐	☐	☐	☐	☐
Quality of translation	☐	☐	☐	☐	☐	☐
Appearance	☐	☐	☐	☐	☐	☐

If your response to any of the above questions is "*Less than satisfactory*" or "*Unsatisfactory,*" please explain your rating.

_____

_____

3. If you could change one thing about this information product, what would it be?

_____

_____

4. Please write any other comments about this information product:

_____

_____

Please complete the following if we may contact you for clarification or to address your concerns:

Name: _____ Date: _____

Company/organization: _____ Telephone number: _____

Address: _____

Email address: _____ Job function: _____

If you choose to complete this form online, go to http://www.lucent-info.com/comments
Otherwise fax to 407 767 2760 (U.S.) or +1 407 767 2760 (outside the U.S.) or email comments to ctiphotline@lucent.com

Contents

About this information product xix

1 Introduction 1-1

Overview of Metropolis® Portfolio 1-2

Metropolis® Products 1-4

Metropolis® EON Functions 1-10

Metropolis® EON Benefits 1-11

Metropolis® EON Release Feature History 1-13

2 Features 2-1

Release 8.2 Features 2-2

3 Network Topologies 3-1

Basic Metropolis® EON Building Blocks 3-3

Linear Applications 3-4

DCC Considerations for Linear Applications 3-11

Ring Applications 3-14

Metropolitan Rings 3-15

Large Ring Applications 3-22

DCC Considerations for Ring Applications 3-25

Managing Ring Traffic 3-31

4	**Product Description**	**4-1**
	Metropolis® EON Equipment Packages	4-3
	Metropolis® EON Architecture	4-14
	Metropolis® EON Shelf Descriptions	4-16
	Circuit Pack/Unit/Modules and Software Compatibility	4-22
	Control Circuit Packs	4-26
	Transmission Circuit Packs	4-44
	Interconnection Panels	4-93
	Power	4-102
	Equipment Interconnection Guidelines	4-107
5	**System Planning and Engineering**	**5-1**
	Metropolis® EON Engineering Rule Conventions	5-3
	Metropolis® EON Engineering Rules for Amplification	5-9
	Engineering Rules for OTU Usage	5-22
	Engineering Rules for OMU/ODU Usage	5-31
	Engineering Rules for Dispersion Compensation	5-32
	Optical Power Target Levels	5-38
	Release 8.2 Easy Install Feature	5-39
	Design for 1.06 Gb/s Traffic Using ELSBB OTU	5-41
	Design for OUPSR Applications	5-42
	Floor Plan Layout	5-44
	Environmental Considerations	5-46
	Power Planning	5-47

6	**Operations, Administration, Maintenance, and Provisioning**	**6-1**
	Operations	6-2
	Administration	6-11
	Maintenance	6-14
	Provisioning	6-35
7	**Ordering**	**7-1**
	How to Order Metropolis® EON	7-3
	Spares Guidelines and Ordering	7-44
8	**Product Support**	**8-1**
	Worldwide Services	8-2
	Training	8-4
9	**Quality and Reliability**	**9-1**
	Lucent's Commitment to Quality and Reliability	9-2
	Quality and Reliability Information	9-4
10	**Technical Specifications**	**10-1**
	System Specifications	10-2
	Optical Interface	10-3
	Optical Power Specifications	10-9
	Environmental Specifications	10-18
	Operations Interfaces	10-20
	Equipment Dimensions	10-22
GL	**Glossary**	GL-1

List of figures

1-1 Metropolis® Portfolio 1-3

1-2 Metropolis® EON Server Applications 1-5

1-3 Metropolis® DMX Server Applications 1-8

1-4 Metropolis® DMXpress Server Applications 1-9

1-5 Divergent Release HIstory 1-13

3-1 Metropolis® EON Single Span with Two-OA Operation 3-5

3-2 Metropolis® EON Single Span with Single-OA Operation 3-6

3-3 Metropolis® EON Single Span with Zero-OA Operation 3-7

3-4 Metropolis® EON Multiple Span System with Repeaters (two-span system shown) 3-8

3-5 Linear Regenerator Application 3-9

3-6 Add/Drop Using Metropolis® EON-compatible Optics and OTU Interfaces 3-10

3-7 Multi Span (Point-to-Point) Linear Chain 3-11

3-8 DCC Extension using TLM 3-12

3-9 DCC Extension using LAN Relay Pack 3-13

3-10 Metropolitan Ring with UPSR Protection 3-16

3-11 Two-OA/Two-OA Metro Ring Terminal 3-17

3-12 Two-OA 4-Node Ring 3-18

3-13 Single-OA/Single-OA Metropolitan Ring Terminal 3-19

3-14 One-OA 4-Node ring 3-20

3-15 Metropolitan Hybrid Ring Four-Node Ring Terminals 3-21

3-16 A Signal Sharing a Large Ring and a Metropolitan Ring 3-23

3-17 DCC Extension via TLM 3-26

3-18 DCC Extension via LAN 3-27

3-19 DCC Connectivity via LAN Cable with Crossover Adapter 3-28

3-20 DCC Connectivity via LAN Cable and Hub 3-29

3-21 DCC Connectivity via TLM Feed-Through 3-30

3-22 Four-Node One-OA Ring 3-31

3-23 Voice Traffic in the Ring 3-32

3-24 Data Traffic in the Ring 3-33

3-25 Fiber Cut between Nodes A and B 3-33

3-26 Fiber Cut between Nodes C and D 3-34

3-27 Channel 5 Added to Bank/Data Center Traffic 3-35

3-28 Channel 5 Moved from Bank to Central Office A Traffic 3-36

3-29 Channels 1 -4 Unaffected by Move of Channel 5 from Bank to Central Office 3-37

4-1 Metropolis® EON Network Seismic Bay Frame 4-6

4-2 Release 8.0 Integrated Bay (Single) 4-8

4-3 Release 8.0 Integrated Bay (Double) 4-10

4-4 Release 8.0 Miscellaneously Mounted Metropolis® EON Shelf with Front Covers 4-12

4-5 Miscellaneously-mounted R8.0 OT Shelf with Front Cover 4-13

4-6 System Control Architecture for Metropolis® EON 4-14

4-7 Metropolis® EON End Terminal Shelf 4-17

4-8 Metropolis® EON Ring Terminal Shelves with LAN Connection 4-18

4-9 Metropolis® EON Repeater Shelf (fully equipped) 4-19

4-10 Miscellaneously-mounted OT System Controller Shelf (8 OTUs; fully equipped) 4-20

4-11 DCM Module 4-21

4-12 Miscellaneously-Mounted DCM Carrier Shelf 4-21

4-13 SYSCTL Circuit Pack Block Diagram 4-27

4-14 SYSMEM Circuit Pack Block Diagram 4-30

4-15 TOHCTL Circuit Pack Block Diagram 4-34

4-16 OTCTL Circuit Pack Block Diagram 4-37

4-17 LDA4 TLM Circuit Pack Block Diagram 4-40

4-18 LDA3 IAOLRP Circuit Pack Block Diagram 4-43

4-19 OA3 (LEA307) Circuit Pack 4-47

4-20 OA3 Block Diagram 4-48

4-21 OA2 (LEA207) Circuit Pack 4-50

4-22 OA2 Block Diagram 4-51

4-23 LIRCV (LEA209) Circuit Pack 4-54

4-24 LIRCV (LEA209) Circuit Pack Block Diagram 4-55

4-25 LITX (LEA211) Circuit Pack 4-56

4-26 LITX (LEA211) Circuit Pack Block Diagram 4-57

4-27 508A and 508B OMU32 (without Combiner) Faceplates 4-58

4-28 OMU16/32 Circuit Pack Block Diagram 4-59

4-29 507A and 507B OMU16 Faceplates 4-60

4-30 OMU16/32 Circuit Pack Block Diagram 4-61

4-31 608A and 608B ODU32 (without Splitter) Faceplates 4-62

4-32 ODU16/32 Circuit Pack Block Diagram 4-63

4-33 607A and 607B ODU16 Faceplates 4-64

4-34 ODU16/32 Circuit Pack Block Diagram 4-65

4-35 LIHTR (LEA210) Circuit Pack 4-66

4-36 LIHTR (LEA210) Circuit Pack Block Diagram 4-67

4-37 UBB Circuit Pack Faceplate 4-68

4-38 UBB Circuit Pack Block Diagram 4-71

4-39 2DM25 Circuit Pack Faceplate 4-73

4-40 2DM25 Circuit Pack Block Diagram 4-74

4-41 Small Form Factor Plug-in (SFP) Module 4-74

4-42 ELSBB Circuit Pack Faceplate 4-76

4-43 ELSBB BLock Diagram 4-77

4-44 10 Gb/s OTU Circuit Pack Faceplate 4-78

4-45 10G OTU Block Diagram 4-79

4-46 Transmission of 10G Signals 4-80

4-47 OTPM 25 Circuit Pack Block Diagram 4-82

4-48 OUPSR (LEP2 and LEP3) 4-83

4-49 Four, Three, or Two OTUs per Office 4-86

4-50 OUPSR (LEP2 and LEP3) Circuit Pack Block Diagram 4-87

4-51 QOTUUB Design 4-88

4-52 QOTU25 Design 4-89

4-53 QOTU Design 4-92

4-54 Metropolis® EON Shelf Interconnection Panel 4-93

4-55 OT System Controller Shelf Interconnection Panel and Cabling 4-94

4-56 OT Complementary Shelf Interconnection Panel and Cabling 4-94

4-57 Metropolis® EON SONET User Panel 4-95

4-58 Metropolis® EON Shelf SDH User Panel 4-97

4-59 Metropolis® EON Fuse Panel 4-99

4-60 Miscellaneously-Mounted OT Complementary Shelf Fuse/Power Indicating Panel 4-100

4-61 Power Distribution in a Three-Shelf Bay Using Miscellaneous Mount Design 4-103

4-62 Power Distribution for the Release 8.0 Integrated Bay 4-104

4-63 Metropolis® EON Power Distribution at Shelf Level 4-105

4-64 ST-Type Build-Out Assembly (enlarged) 4-108

4-65 FC-Type Build-Out Assembly (enlarged) 4-108

4-66 SC-Type Build-Out Assembly (enlarged) 4-109

4-67 LC-Type Connector (enlarged) 4-109

4-68 LBO Location in an End Terminal 4-111

5-1 Metropolis® EON Conventions Used for Two-OA Application 5-5

5-2 Metropolis® EON Conventions Used in Single-OA Application with Line Interface 5-6

5-3 Metropolis® EON Conventions Used in Single-OA Application without Line Interface 5-7

5-4 Metropolis® EON Conventions Used in Zero-OA Application 5-8

5-5 Example of Simple Engineering Rules for Two-OA Application 5-9

5-6 Pass-through Route Example 5-19

5-7 Connecting Remote Network Elements 5-21

5-8 OTU Usage 5-22

5-9 OTUs for Concatenation 5-23

5-10 Drop OTU Usage - Long Optical Line 5-26

5-11 Drop OTU Usage - Pass through Connections 5-27

5-12 Single-span DCM 5-33

5-13 Multiple Spans DCM 5-34

5-14 OUPSR Connections 5-42

5-15 Typical Floor Plan Layout 5-44

5-16 Square Foot Area Used in Power Dissipation Calculation 5-45

6-1 CIT Operations Domain with Standard End Terminals 6-4

6-2 CIT Operations Domain with Dual-facing End Terminal 6-5

6-3 OUPSR with Single-Mode or Multi-mode Interface 6-20

6-4 OUPSR with Single-mode Interface 6-21

6-5 APSD for Optical Line Failure Between Terminals (Two-OA) 6-23

6-6 Restart on an Optical Line Link Between Terminals (Two-OA) 6-24

6-7 APSD from Optical Line Failure (Single-OA) 6-25

6-8 Restarting on an Optical Link Between Terminals (Single-OA) 6-26

6-9 Metropolis® EON End Terminal Shelves (fully equipped) 6-38

7-1 Small Form Factor Plug-in (SFP) Module 7-20

7-2 Integration Cabling - Metropolis® EON Shelf/One OT System Controller Shelf 7-24

7-3 Integration Cabling - Metropolis® EON Shelf/Two OT System Controller Shelves 7-25

7-4 1A-TX-32 End Terminal (2-OA) 7-29

7-5 Sparing Chart -- 10-Day Lead Time 7-47

7-6 Circuit Pack Sparing Chart -- 64-Day Lead Time 7-48

List of tables

2-1 Geographically Dispersed Parallel Sysplex (GDPS) 2-7

4-1 Circuit Packs/Units/Modules and Compatible Software 4-22

4-2 Overhead Bytes 4-35

4-3 E1 Signal Supervisory Channel Byte Allocation 4-41

4-4 OA and TLM Circuit Pack Compatibility 4-42

4-5 UBB Signals and Signal Degrade (SD) Detection 4-70

4-6 Drop OTUs that Detect Signal Degrade (SD) 4-84

4-7 SONET Indicators on Metropolis® EON User Panel 4-96

4-8 SDH Indicators Present on Metropolis® EON User Panel 4-98

4-9 Metropolis® EON and OT Power Specifications 4-101

4-10 Power Cable Color Codes 4-102

5-1 Optical Amplifiers used in Metropolis® EON 5-3

5-2 Two-OA Application Metropolis® EON Conventions 5-4

5-3 Metropolis® EON Conventions Used for Single-OA Application with Line Interface 5-6

5-4 Metropolis® EON Conventions Used for Single-OA Application without Line Interface 5-7

5-5 Metropolis® EON Conventions Used for Zero-OA Application 5-8

5-6 Engineering Rules for 32-channel, Two-OA Metropolis® EON Application 5-11

5-7 Engineering Rules for 16-channel, Two-OA Metropolis® EON Application 5-13

5-8 Engineering Rules for 32- and 16-channel, Single-OA Metropolis® EON Application 5-14

5-9 Engineering Rules for 32-channel, Zero-OA Metropolis® EON Application1 5-15

5-10 Maximum Number of Pass-throughs for Total Channels Equipped: 16-channel OA Only 5-17

5-11 Pass-Through Application Engineering Rules for Spans with One Optical Amplifier (10Gb/s Maximum Data Rate) 5-18

5-12 Example of Using OTUs to Concatenate Metropolis® EON Systems 5-24

5-13 Dispersion Limits for OTUs 5-29

5-14 OMU/ODU Usage in Different Releases 5-31

5-15 PMD Penalties 5-35

5-16 DCM Calculation Values 5-36

5-17 LBO Installation with the Easy Install Feature 5-40

5-18 Wattage Per Unit of a Metropolis® EON Bay 5-49

5-19 Typical Integrated Bay (Single) Power Dissipation 5-51

6-1 OUPSR LED States for Failure Conditions 6-9

6-2 OUPSR LED States for Good Signals 6-10

6-3 Data Muxing OTU LED States 6-10

6-4 Performance Monitoring of Optical Signals 6-27

7-1 Metropolis® EON Control Circuit Pack Ordering 7-4

7-2 Metropolis® EON Transmission Circuit Pack Ordering 7-5

7-3 Metropolis® EON Miscellaneous Ordering 7-6

7-4 Allowed Mix of Pre-release 8.x and Release 8.x Hardware for Desired Feature 7-7

7-5 Metropolis® EON Terminal Equipment Packages 7-9

7-6 SFP Pluggable Modules for the Muxing OTU 7-21

7-7 Cable Ordering Information 7-22

7-8 LAN Cable Ordering Information 7-23

7-9 Metropolis® EON Intraoffice Electrical Non-transmission Cables 7-27

7-10 Intra-Shelf Fiber Jumpers for 1A-TX-32 End Terminal 7-30

7-11 Metropolis® EON Shelf Intra-shelf Fibers 7-31

7-12 LBO Kits 7-32

7-13 Labels for Release 8.2 and Pre-Release 8.0 Equipment 7-33

7-14 Replacement Fan Alarm Cables 7-35

7-15 Cleaning Materials for Optical Fiber Connectors 7-36

7-16 METRAL Pin Ordering Information 7-37

7-17 METRAL Pin Kit/Pin Tool Kit Ordering Information 7-37

7-18 Metropolis® EON/OT Equipment Locations and Pin Types 7-38

7-19 Ordering Information for External Miscellaneous Discrete Unit (EMDU) 7-41

7-20 New System/Upgrade Software and Documentation Ordering 7-42

7-21 Additional Software and Documentation Ordering 7-42

7-22 Circuit Pack FIT Rates for Metropolis® EON/OTU 7-45

7-23 Circuit Pack Ordering Information 7-49

9-1 Circuit Pack FIT Rates per Telcordia RPP 9-4

9-2 Channel Unavailability (min/year/channel) 9-7

9-3 Telemetry Channel Unavailability 9-8

9-4 Mean-Time-Between-Maintenance Activity 9-9

10-1 Optical Safety Data on Laser-Containing Circuit Packs 10-4

10-2 Minimum and Maximum OA Spacing 10-6

10-3 OMU/ODU Insertion Loss 10-6

10-4 Tone Frequencies 10-7

10-5 Optical Power Targets 10-9

10-6 Add OTU/OTPM Input Power Range 10-10

10-7 OMU Input/OTU Output Targets for 32-channel OA 10-12

10-8 OMU Input Targets for 16-channel OA 10-13

10-9 OMU Output/Transmit OA Input Targets 10-14

10-10 Transmit OA Output Power (dBm) 10-15

10-11 Optical Signal Specifications for 1.3m OTU/OTPM 10-17

10-12 Operating Temperature/Humidity Values 10-19

10-13 Handling and Transportation Tolerance Ranges 10-19

10-14 Metropolis® EON/OT Physical Dimensions 10-22

10-15 Metropolis® EON/OTU Circuit Pack Dimensions 10-23

10-16 Metropolis® EON/OT Floor Loads 10-24

About this information product

Purpose

The information product (IP), *Metropolis*® Enhanced Optical Networking (EON) *Applications and Planning Guide (APG)* is used by network planners, analysts and managers. It also can be used by the Lucent Account Team. This guide presents a detailed overview of the Metropolis® EON system, describes its applications, gives planning requirements, engineering rules, ordering information, and technical specifications.

Reason for reissue

The new features for the third issue of *Metropolis*® Enhanced Optical Networking (EON) *Applications and Planning Guide (APG)* are described in Chapter 2.

Safety labels

This section is not applicable to this book.

Intended audience

The intended audience of this information product (IP) primarily is network planners and engineers, as well as for anyone who needs information about the features, applications, operation, engineering, and ordering of Metropolis® EON.

How to use this information product

This IP consists of chapters that describe Metropolis® EON operations.

Assumptions

This information product assumes that readers have the following required skills.

- Basic principles of telecommunication transmission
- Common telecommunication and system terminology (a glossary is provided in this manual to assist you)
- Test sets and tools used in the telecommunication industry
- Local operations and functional procedures of your company
- Personal computer (PC) operation, common PC terminology, and navigational tasks in a windows-style user interface.

Training

Prerequisite training that will allow you to become proficient in understanding and operating the Metropolis® EON is described in “Related training” (xxv) and in Chapter 8, "Product Support".

Information contained in this IP

The following table briefly describes the type of information found in each chapter.

Chapter Title	Description
About this information product	The preface • describes the guide's purpose, intended audience, and organization • lists related documentation • explains how to comment on this document
Chapter 1, "Introduction"	Presents a summary description of Metropolis® EON
Chapter 2, "Features"	Describes the major features of Metropolis® EON. The features are further described in Chapter 3, "Network Topologies," Chapter 4, "Product Description," and Chapter 6, "Operations, Administration, Maintenance, and Provisioning"
Chapter 3, "Network Topologies"	Describes how Metropolis® EON handles linear and ring applications
Chapter 4, "Product Description"	Describes Metropolis® EON architecture. After introducing the various Metropolis® EON and OTU packages, Chapter 4 describes the system control, physical design, transmission, synchronization, protection, and powering down to the circuit pack level
Chapter 5, "System Planning and Engineering"	Summarizes descriptive information used with applications information to plan procurement and deployment of Metropolis® EON
Chapter 6, "Operations, Administration, Maintenance, and Provisioning"	Discusses the features available for monitoring and maintaining Metropolis® EON
Chapter 7, "Ordering"	Contains equipment ordering information for Metropolis® EON
Chapter 8, "Product Support"	Describes how Lucent Technologies supports Metropolis® EON; with information on engineering and installation services, technical support, and training

Chapter Title	Description
Chapter 9, “Quality and Reliability”	Contains the Lucent Technologies quality policy, describes the reliability program, and reliability specifications for Metropolis® EON
Chapter 10, “Technical Specifications”	Lists the technical specifications of Metropolis® EON
Glossary	Defines telecommunication terms and expands common telecommunication abbreviations and acronyms
Index	Lists specific subjects and their corresponding page numbers

Conventions used

The following conventions are used throughout this IP.

Numbering

The chapters of this document are numbered consecutively. The page numbering restarts at *1* in each chapter. To facilitate identifying pages in different chapters, the page numbers are prefixed with the chapter number. For example, page 2-3 is the third page in chapter 2.

Cross references

Cross reference conventions are identical with those used for numbering (for example, the first number in a reference to a particular page refers to the corresponding chapter).

Keyword blocks

This document contains so-called keyword blocks to facilitate the location of specific text passages. The keyword blocks are placed to the left of the main text and indicate the contents of a paragraph or group of paragraphs.

Abbreviations

Abbreviations used in this document can be found in the Glossary unless it can be assumed that the reader is familiar with the abbreviation.

Related documentation

This section briefly describes the documents that are included in the Metropolis® EON documentation set.

- The *Metropolis® Enhanced Optical Networking (EON) Applications and Planning Guide (APG)*, Issue 3, 365-575-558, R8.2 is used by network planners, analysts and managers. It also can be used by the Lucent Account Team. This guide presents a detailed overview of the Metropolis® EON system, describes its applications, gives planning requirements, engineering rules, ordering information, and technical specifications.
- The *Metropolis® Enhanced Optical Networking (EON) User Operations Guide (UOG)*, Issue 3, 365-575-559, R8.2 provides step-by-step information for use in daily system operations. This guide demonstrates how to perform system provisioning, operations, and administrative tasks by use of CIT.
- The *Metropolis® Enhanced Optical Networking (EON) Alarm Messages and Trouble Clearing Guide (AMTCG)*, Issue 3, 365-575-560, R8.2 gives detailed information on each possible alarm message. Furthermore, it provides procedures for routine maintenance, troubleshooting, diagnostics, and component replacement.
- The *Metropolis® Enhanced Optical Networking (EON) Operations Systems Engineering Guide (OSEG)*, Issue 3, 365-575-561, R8.2 gives detailed information on each TL1 command. Furthermore, it includes information on the Operations Interfaces used with
- The *Metropolis® Enhanced Optical Networking (EON) Installation Guide (IG)*, Issue 3, 365-575-562, R8.2 is a step-by-step guide to system installation and setup. It also includes information needed for pre-installation site planning and post-installation acceptance testing.
- *The Metropolis® Enhanced Optical Networking (EON) Software Release Description (SRD)*, Issue 3, 365-575-563, R8.2 is a description of procedural information required to upgrade the Metropolis® EON software to Release 8.2. It also includes a listing of Release 8.2 features, problems fixed, known problems, and other helpful information.
- The *Metropolis® Enhanced Optical Networking (EON) Provisioning Job Aid*, Issue 3, 365-575-564, R8.2 is a set of laminated job aid cards, containing detailed provisioning information, that are used for quick reference.

- The *Metropolis® Enhanced Optical Networking (EON) Threshold-Crossing Alert (TCA) Parameters Provisioning Job Aid*, Issue 3, 365-575-565, R8.2 is a set of laminated job aid cards, containing detailed TCA parameter provisioning information, that are used for quick reference.

The following additional documents can be helpful for planning and ordering:

- *Toll Systems OLS Intercabinet Cables, ED7G028-22.*
- *Toll Systems Cable Assemblies OT Cabinet Framework, ED7G045-20.*
- *Toll Systems OT System Ordering and Installation Information for OT Cabinet, J69000-C-1*.

Related training

Lucent Technologies offers a formal training curriculum to complement your product needs.

Registering for a course

To review the available courses or to enroll in a training course at one of Lucent's corporate training centers,

- Within the United States,
  - Visit **https://www.lucent-product-training.com**
  - Call **1-888-LUCENT8** (888-582-3688): *Prompt 2*.
- Outside the continental United States,
  - Visit **https://www.lucent-product-training.com**
  - Contact your in-country training representative
  - Call: **+1-407-767-2798**
  - Fax: **+1-407-767-2677**

Suitcasing

To arrange for a suitcase session at your facility,

- Within the United States, call **1-888-LUCENT8** (888-582-3688): *Prompt 2*.
- Outside the continental United States,
  - Contact your in-country training representative
  - Call: **+1-407-767-2798**
  - Fax: **+1-407-767-2677**

How to comment

Customer comments on Metropolis® EON documents are welcome. A comment form can be found at the beginning of this document. The comment form can be faxed to *1.407.767.2760.*

How to order

The Metropolis® EON documents can be ordered as individual paper copies or as a set on CD-ROM from the Customer Information Center (CIC).

To order documents, specify the document or CD-ROM you need. Order by contacting your account executive or by using a contact listed below.

RBOC and BOC customers should process orders through their company documentation coordinator.

Standard Mail Address

Lucent Technologies Inc.
Customer Information Center
Attn: Order Entry Section
2855 N. Franklin Road
P. O. Box 19901
Indianapolis, IN 46219

Internet Address

www.lucentdocs.com

Telephone/Fax Numbers

From U.S.A.:

Telephone: 1-888-LUCENT8
Fax: 1-800-566-9568

From North American Region

Telephone: 1-317-322-6619
Fax: 1-317-322-6359

From Asia/Pacific Region and Caribbean and Latin America Region

Telephone: 1-317-322-6411
Fax: 1-317-322-6699

From Europe, Middle East, and Africa

Telephone: 1-317-322-6416
Fax: 1-317-322-6699

□

1 Introduction

Overview

Purpose This chapter presents an overview of the Metropolis® Enhanced Optical Networking (EON) product.

Contents The following sections are included in this chapter:

Overview of Metropolis® Portfolio	1-2
Metropolis® Products	1-4
Metropolis® EON Functions	1-10
Metropolis® EON Benefits	1-11
Metropolis® EON Release Feature History	1-13

Overview of Metropolis® Portfolio

Introduction

Metropolitan networks are the communications networks that link homes and businesses to larger, long-distance core networks. These networks are complex because they are filled with both old and new networking equipment and must carry all types of service traffic, including voice, data and video.

Driven by the exponential growth of the Internet, requirements for metropolitan optical transport networks are changing quickly from pure circuit networks to hybrid networks. This evolution requires metropolitan access networks to bridge the bandwidth gap between local area networks (LANs) and core backbone networks. These requirements are driving metropolitan network evolution from traditional SONET multiplexers into more flexible, higher-speed, data-aware platforms - a necessity for optical edge solutions.

Lucent Technologies is helping service providers cost-effectively deploy Metropolis® solutions that can accommodate a multitude of services, such as voice, private line, Ethernet™, IP, frame relay, and ATM. The Metropolis® portfolio offers a seamless evolution to next-generation metropolitan solutions that can eliminate the bottleneck in the metropolitan network, allowing service providers to deliver new high-speed, revenue-generating services such as Gigabit Ethernet (GbE-1), virtual private networks (VPN), storage area networks and digital subscriber lines (DSL).

Lucent designed its Metropolis® portfolio so its service provider customers will be able to choose the solution that best accommodates their existing network allowing them to bring new services to market quickly and cost effectively.

Next-Generation Platforms

Metropolis® includes the following categories of next-generation products based on the most common types of metropolitan networks:

- Metropolitan Wavelength Division Multiplexing -- Metropolis® EON, a metropolitan Dense Wavelength Division Multiplexing (DWDM) solution for regional and metropolitan traffic.
- Next-Generation SONET -- Metropolis® DMX Access Multiplexer and Metropolis® DMXpress Access Multiplexer, which leverage existing optical equipment while providing a solid foundation for future bandwidth, Gigabit Ethernet (GbE-1), and IP services growth.

The Metropolis® solutions, with a single element management system, Navis™ Optical Element Management System (EMS) and direct optical interfacing without OTUs, provide an integrated TDM and DWDM solution. In addition, Metropolis® solutions can fuse with Lucent new multiservice data switches and existing IP and ATM equipment to provide an end-to-end broadband network that links to long-distance or other metropolitan networks.

Figure 1-1 Metropolis® Portfolio

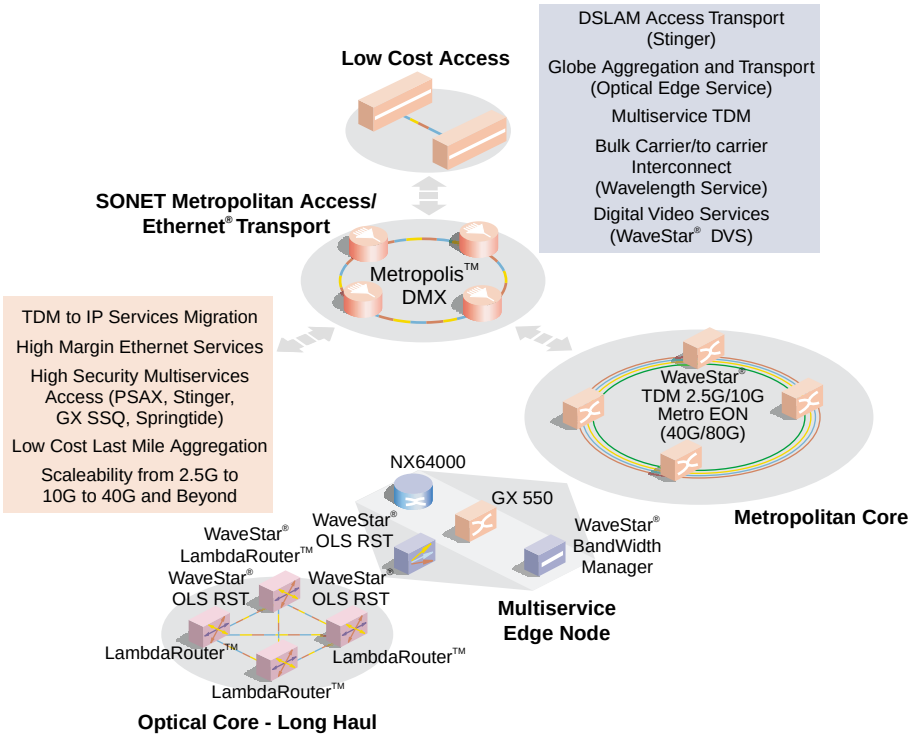

2.5G = WaveStar® TDM 2.5G (OC-48) 2F
10G = WaveStar® TDM 10G (OC-192) 4F
40G = WaveStar® OLS 40G

nc-dmx-111

Metropolis® Products

Introduction

The section provides a brief description of each of the following products which comprise the Metropolis® portfolio:

- Metropolis® Enhanced Optical Networking (EON) also known as Metropolis® EON
- Metropolis® DMX Access Multiplexer also known as Metropolis® DMX
- Metropolis® DMXpress Access Multiplexer also known as Metropolis® DMXpress

Metropolis® Enhanced Optical Networking (EON)

The Metropolis® EON system provides a cost-effective and highly scalable DWDM solution for metropolitan/regional rings with the benefits of low start-up costs, protected or unprotected wavelength channels, ease of maintenance as traffic patterns change, and rapid deployment of services. The same DWDM platform may be used to connect metropolitan/regional rings using long-haul transport features.

Interfaces

The Metropolis® EON is a 32-channel DWDM system designed to deliver up to 320 Gigabits per second (Gb/s) capacity over a single strand of fiber. In Release 8.2 Metropolis® EON supports OC-3/STM-1, OC-12/STM-4, OC-48/STM-16, OC-192/STM-64, Gigabit Ethernet (GbE-1), and 16 Mb/s - 2.5 Gb/s data services across linear and ring topologies.

Metropolis® EON also works with Navis™ Optical EMS. This element management system (EMS) supports synchronous optical network (SONET or SDH) NEs. Navis™ Optical EMS provides fault, provisioning, configuration, and security management functions via a graphical user interface (GUI). Through these functions, Navis™ Optical EMS is able to support communication multiplexing or concentration, guarantee network security, and record all database changes. The Navis™ Optical EMS also provides a cut-through capability, allowing the Navis™ Optical EMS user to access an NE through its native command set.

The Navis™ Optical EMS operates as an enhanced graphical tool and as a general configuration management aid. It provides NE port associations as well as flow-through from provisioning operations systems (OS) to NEs. The Navis™ Optical EMS also provides fault management through subnetwork alarm and event pre-processing prior to sending fault information to a network surveillance system such as the Network Monitoring and Analysis-facility (NMA-F).

Server Applications

The Metropolis® EON supports an optical networking technology that enables protected ring architectures for server applications. This scalable technology provides capabilities for performance monitoring, remote test capability, fault isolation and preventive maintenance on a per wavelength basis.

Figure 1-2 Metropolis® EON Server Applications

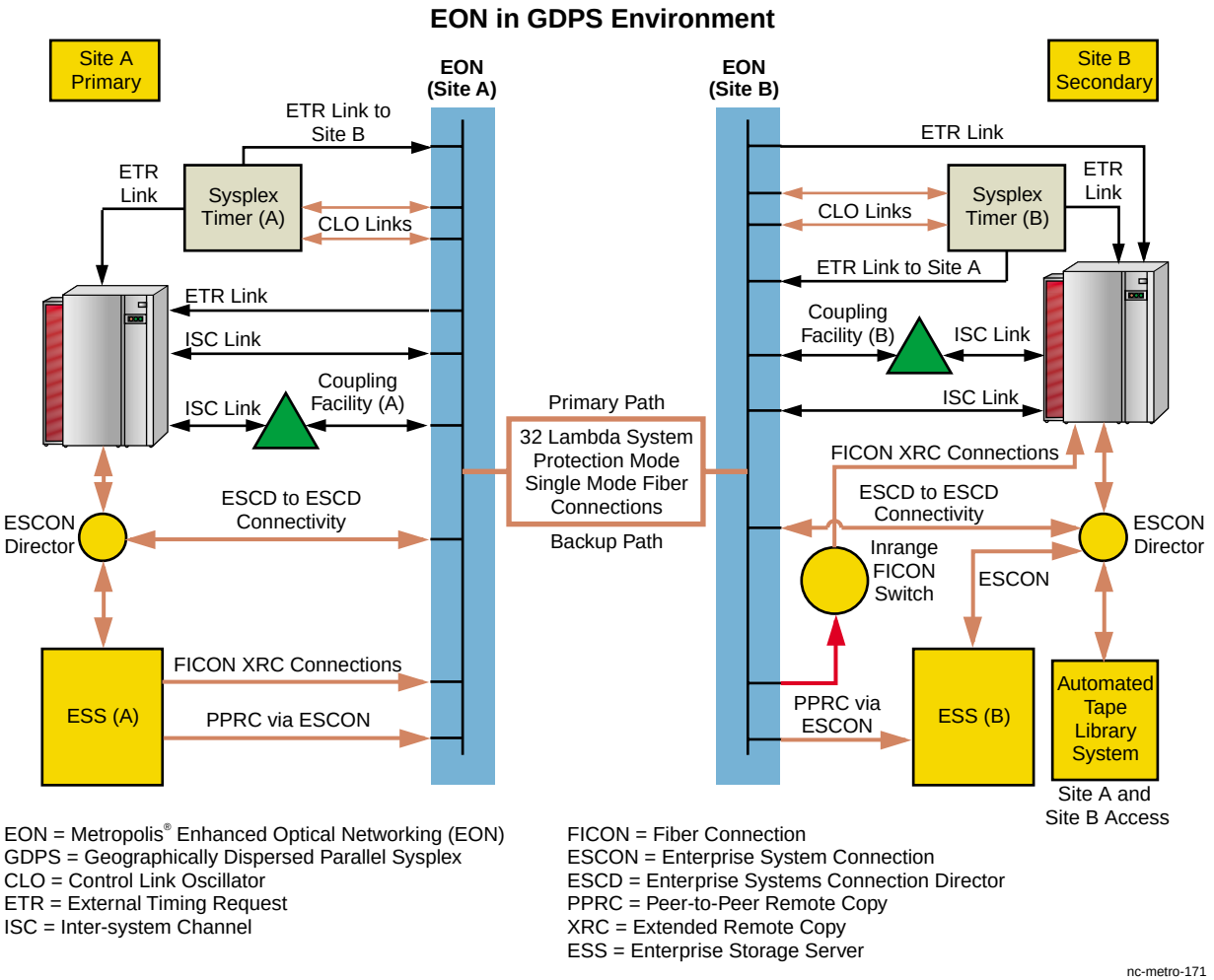

With Release 8.2, Metropolis® EON now supports an IBM-developed technology, Geographically Dispersed Parallel Sysplex (GDPS) which provides the capability to:

- manage the remote copy configuration and storage subsystem(s),
- automate parallel sysplex operational tasks, and
- perform failure recovery from a single point of control.

GDPS combines the characteristics of redundant applications, servers, and storage in the data center with a backup data center. Processing can switch to the backup data center automatically to minimize downtime. Data is mirrored in the backup data center to facilitate a quick recovery time.

In legacy GDPS, supporting GDPS requires the support of:

- Optical Fiber Control (OFC),
- Inter-System Coupling (ISC-2) links at 1.06G, and
- External Timing Reference (ETR)

OFC is an IBM protocol developed to support safety measures in the event of a fiber cut. OFC controls the shut down of lasers when the received signal is no longer present at the receiver interface.

ISC channels provide the connectivity required for data sharing between the Central Facility and the systems directly attached to it.

ETR channels support timing information required by OFC and ISC. Proprietary ETR signals do not allow optical protection. As a result, ETR signals must be provisioned to ensure proper management.

The IBM new Z-series processor no longer requires OFC in GDPS applications. Inter-System Coupling (ISC3) links at 2.12G are used without OFC.

Metropolis® DMX Access Multiplexer

The Metropolis® DMX product provides a solution for service providers with an embedded SONET base who are seeking to migrate to next generation technology and to new next-generation carriers who are seeking to provide SONET and Ethernet services over the proven reliability of SONET transport from speeds of DS-1 to OC-192. The Metropolis® DMX solution helps add revenue opportunities through the addition of new services, and reduces costs through the consolidation of multiple technologies in one network element.

Interfaces

Metropolis® DMX supports a wide array of wideband and broadband transport, including traditional SONET transport of DS1, DS3, EC-1, OC-3, OC-12, OC-48, and OC-192 signals, as well as 10/100/1000 Mb/s LAN transport. This single-shelf product can be equipped to serve many diverse network applications and supports a variety of operations interfaces for current and evolving network operations needs.

Server Applications

Metropolis® DMX provides a wide range of service applications transporting voice and data from the access edge of the network to the core of the network. These applications range from traditional SONET applications to advanced data transport applications. See the following figure.

Figure 1-3 Metropolis® DMX Server Applications

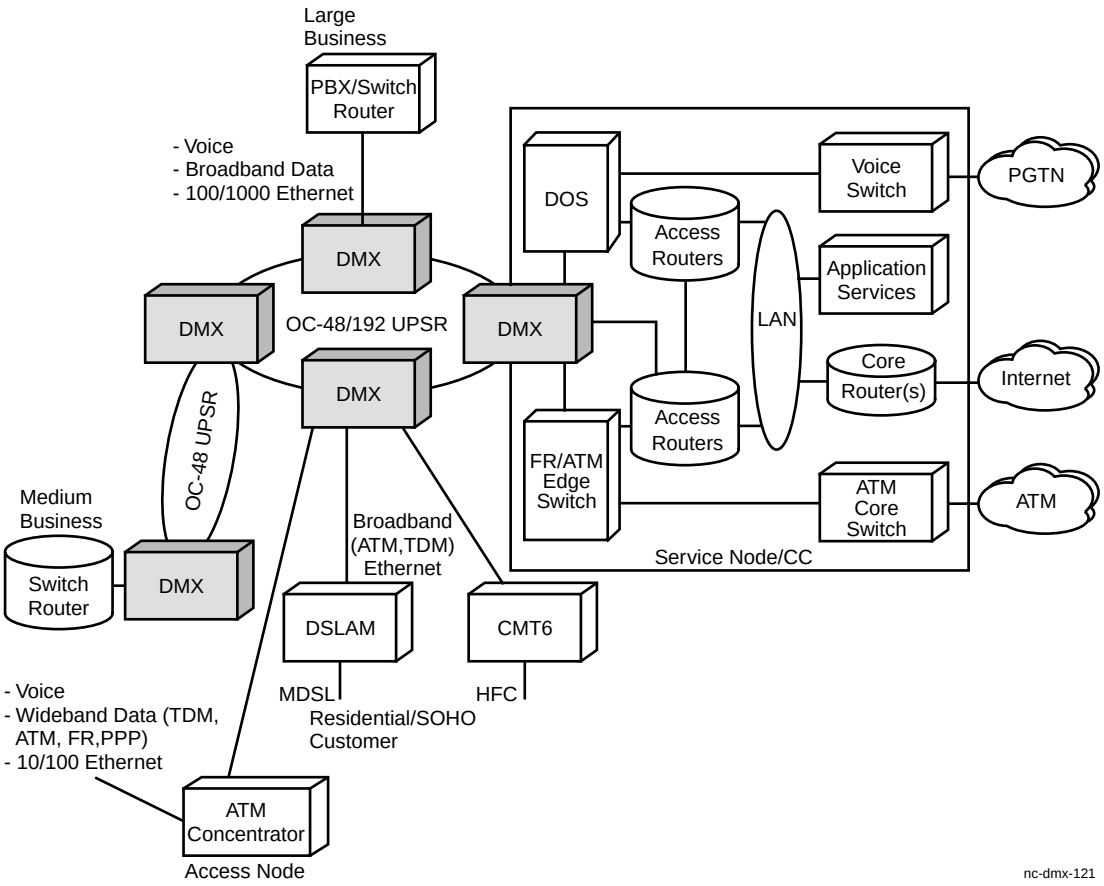

Metropolis® DMXpress

The Metropolis® DMXpress is primarily designed for use in Customer Premises Equipment (CPE) applications in an ILEC/CLEC environment. Metropolis® DMXpress has been developed to serve as a “last mile” optical solution for network-protected bandwidth at the edge of the Metropolitan Optical Network. In addition, Metropolis® DMXpress provides for low-cost service offerings including traditional voice services (TDM), as well as data services (Ethernet).

Interfaces

The Metropolis® DMXpress offers OC-48 Unidirectional Path switched Ring (UPSR) as a standard interface using 1310nm intermediate reach optics. Metropolis® DMXpress is designed to provide DS1, DS3, and either 10/100 (Fast) or Gigabit Ethernet (GbE-1) services to an OC-48 UPSR for transport to a metropolitan optical ring.

Server Applications

Metropolis® DMXpress is optimized for use in small central offices (COs) and CPEs. The following figure provides an overview of the network applications served by Metropolis® DMXpress.

Figure 1-4 Metropolis® DMXpress Server Applications

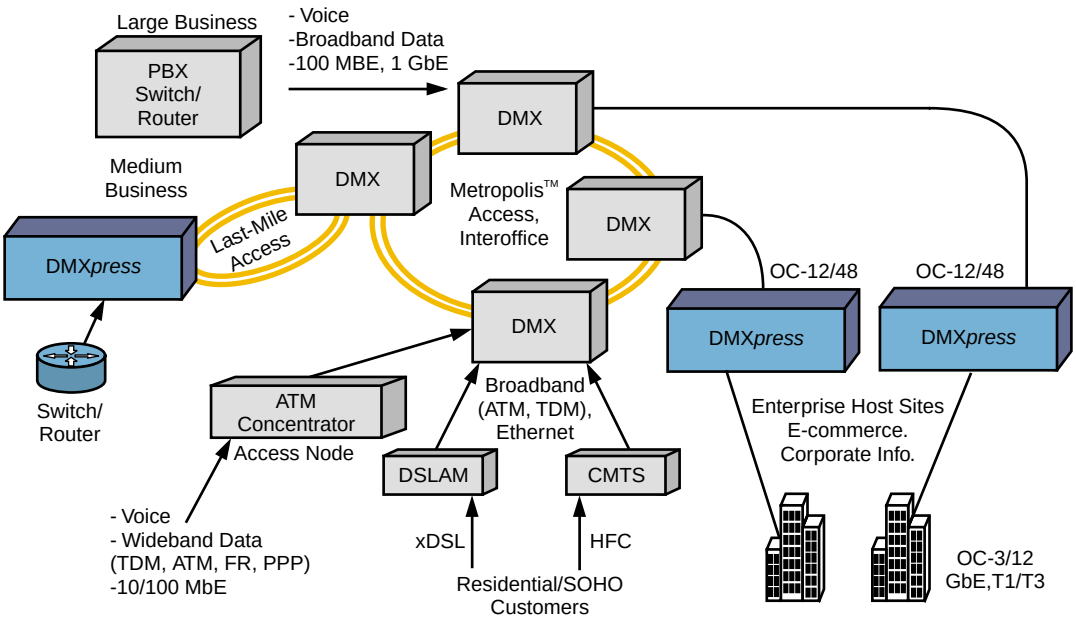

The Metropolis™ DMX*press* allow network providers to choose form a variety of access network deployment strategies to meet their service delivery needs

DMX*press* = Metropolis™ DMX*press* Access Multiplexer
DMX = Metropolis™ DMX Access Multiplexer

NC-Xpress-043

Metropolis® EON Functions

Metropolis® EON has the following functions:

- Receives up to 64 services and transports them using a 32-channel system on one fiber
- Supports any data rate from 16 Mb/s to 2.5 Gb/s, including ETR, ISC2, ISC3, FICON, ESCON, Fiber Channel, and GbE
- Supports any SONET/SDH rate, including OC-3/STM-1, OC-12/STM-4, OC-48/STM-16, and OC-192/STM-64.
- Multiplexes optical signals with an out-of-band supervisory signal that is used for monitoring
- Optionally amplifies signals using an integrated Optical Amplifier (OA) with Automatic Gain Control (AGC)
- Provides a full suite of OAM&P capabilities, including optical monitoring of individual wavelength channels at the OA output and even in configurations without OAs
- Provides optical per-channel protection switching with either protected or unprotected OTUs, as desired, based on loss of signal (LOS) as well as signal degrade (SD)
- Supports unamplified spans, spans with 1-OA, spans with 2-OA, and spans with repeaters
- Provides performance monitoring (PM) based on SONET/SDH overhead and 8-bit/10-bit encoding
- Supports 5-node rings with circumference of 150 km without optical-to-electrical-optical (O-E-O) conversion
- Provides TL1 over X.25, TCP/IP, or OSI/LAN interfaces
- Provides Automatic Power Shut Down (APSD) and restart for optical safety
- Supports bit-rate monitoring and discrepancy reporting for service level agreements (SLAs) using 8bit/10bit encoding scheme or SONET overhead

□

Metropolis® EON Benefits

Introduction

Metropolis® EON provides the following benefits:

- Saves operations time and money
- Saves equipment/plant cost
- Helps generate more revenues

The next few paragraphs describe each of these benefits in more detail.

Saves Operations Time and Money

- Supports capacity growth, one channel at a time, without re-balancing the optical line and rolling traffic
- Supports traffic pattern changes without re-engineering the metropolitan ring
- Prevents wavelength blocking via Wavelength Interchange
- Configurable for a variety of topologies, such as linear and ring configurations
- Provides user-settable alarms and control of equipment collocated with Metropolis® EON

Saves Equipment/Plant Cost

- Provides ability to choose optical protection on a per wavelength basis
- Handles up to 320 Gb/s of traffic on one fiber line
- Zero-OA, Single-OA and Two-OA operations supported
- Repeater sites between terminals to support each span, if required
- Supports through traffic in ring (add/drop) nodes without requiring regeneration

Helps Generate More Revenues

- Provides platinum, gold and silver service level agreements (SLAs) that support the following protection levels:
  - Protection switching based on SD using protected OTUs
  - Protection switching based on LOS with unprotected OTUs
  - External protection without optical protection switching

- Supports lower initial bids by:
  - Minimizing start-up cost for 32-channel rings using modular 16-channel OMU/ODU
- Avoids revenue-affecting service interruptions by providing performance monitoring, fault isolation, and preventive maintenance

□

Divergent Release History

Release 8.2 is based on Release 8.0. The following figure shows how Release 8.0 Metropolis® Enhanced Optical Networking (OLS 40G/ 80G) was derived from the domestic (OLS 40G) and international (OLS 80G) WaveStar® product releases.

Figure 1-5 Divergent Release HIstory

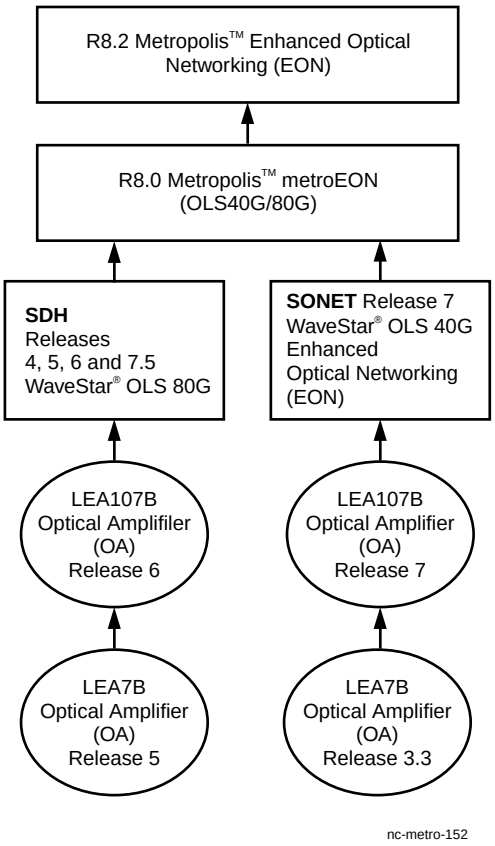

Release 1.0 Features

Release 1.0 included the following features:

- Up to eight wavelengths at OC-48/STM-16 bit rate
- Long Span transmission up to 360 km
- Flexible span engineering (1 to 3 spans)
- Support for up to four bidirectional optical lines
- Redundantly-pumped OAs
- Automatic OA gain control
- Craft Interface Terminal (CIT)

- Transaction Language 1 (TL1) command operations system interface
- Orderwire
- Parallel telemetry
- Automatic fault detection and isolation
- 155 Mb/s customer maintenance signal
- Gateway Network Element (GNE) operation
- Alarm Gateway Network Element (AGNE) support
- Optical signal performance monitoring
- Pump performance monitoring
- Threshold Crossing Alert (TCA) reporting
- Automatic and CIT provisioning
- User software download
- Multi-level security
- Login and password aging.

Release 2.0 Features

Release 2.0 added the following features to R1.0:

- The OC-48/STM-16 Optical Translator Unit (OTU) for open optical interface to multi-vendor OC-48/STM-16 products
- Fully flexible WAD capability
- Long Reach transmission up to 640 km
- Flexible span engineering (1 to 8 spans).

Release 2.1 Features

Release 2.1 added the following features to R2.0:

- Up to sixteen wavelengths with any mix of OC-3/STM-1, OC-12/STM-4, OC-48/STM-16, or 400-700 Mb/s signal rates.
- Open optical interfaces to multi-vendor OC-3/STM-1, OC-12/STM-4, and 400-700 Mb/s products with the Quad Optical Translator Units (QOTUs)
- Single-OA capability for up to sixteen wavelengths
- OA for Short Reach applications
- Dual-facing Shelf
- CenterLink craft interface terminal
- Enhanced security.

Release 3.0 Features

Release 3.0 added the following features to R2.1:

- Full integration of Metropolis® EON and OT systems
- Telemetry feed-through capability
- 16-wavelength transmission on Long Span routes of up to 120 km per span
- Low speed broadband Optical Translator Port Module (OTPM) supporting 100 - 750 Mb/s low speed signal rates
- Automatic power shut-down and restart.

Release 3.1 Features

Release 3.1 added the 1+1, non-revertive protection switching for customer traffic over point-to-point Metropolis® EON systems to R3.0 using:

- The Self-Powered Optical Multiplexer Unit (SPOMU) circuit pack
- The Self-Powered Optical Demultiplexer Unit (SPODU) circuit pack

Releases 3.3 and 3.4 Features

Release 3.3 added the following to R3.0:

- standard GbE signal (1.25 Gb/s)
- LEA7B Optical Amplifier with optical monitor test port connection to an external optical test set.
  - support for a 1532 nm or 1510 nm supervisory channel
  - an optical monitoring test port at the output

Release 3.4 added the X.25 traffic redirect feature to R3.3.

Release 4 Features

Release 4 added the following to R3.1:

- Improved network management via the Common Management Information Service Element (CMISE) feature
- Faster OS/NE connectivity via the IAO LAN
- LEA7B Optical Amplifier with optical monitor test port connection to an external optical test set.
  - support for a 1532 nm or 1510 nm supervisory channel
  - an optical monitoring test port at the output

Release 5 Features

Release 5.0 added the following to R4.0:

- CMISE software download for future releases
- A new TLM pack (LDA4)
  - with a supervisory channel based on 1510 nm OLS optics
  - with a 2Mbps E1 interface
  - which requires use of LEA7B OA

Release 6 Features

Release 6.0 added the following to R5.0:

- A new Optical Amplifier (LEA107B) with:
  - support for a 1532 nm or 1510 nm supervisory channel
  - an optical monitoring test port at the output
- Provisionable Optical Line Loss of Signal (LOS) Severity
- ITM-SC enhancements
- Flexible NSAP area address
- Provisionable NSAP System ID
- Alarm generation on duplicate wavelength
- Additional special characters for the TID field
- Support of 50 nodes in a string

Release 7 Features

Release 7.0 added the following features to Release 3.4:

- A new Optical Amplifier (LEA107B) with:
  - support for a 1532 nm or 1510 nm supervisory channel
  - an optical monitoring test port at the output
- Metropolitan and Regional Ring Applications
  - OMU/ODU pass-through connections
  - Low loss OMU/ODU

Release 7.5 Features

Release 7.5 encompasses the features from Releases 4, 5, and 6 that were not part of Release 7.0.

Important! In Release 7.5 the TL1 over OSI/LAN interface was used instead of CMISE, and Navis™ Optical EMS was the management system instead of WaveStar® ITM-SC.

Release 8.0 Features

Release 8.0 introduced the following new features and enhancements to R7.5:

- Increased channel-ready capacity:
  - A 32-channel Optical Amplifier (LEA207 OA2) which supports 16 channels with 2.5G signals (10G signals will be supported in a future release), automatic gain control (AGC), and the 1510 nm optical supervisory channel (OSC) used in WaveStar® OLS 80G Release 5 and 6
  - 32-wavelength ready Optical Multiplexer Unit 16 (OMU16) and Optical Demultiplexer Unit 16 (ODU16) to allow future in-service growth of channels 17-32
  - Line Interface Transmit (LITX) and Line Interface Receive (LIRCV) circuit packs with supervisory channel (1510 nm) add/drop filter, respectively, for single-OA or zero-OA applications.
- Reduced footprint with Quad Optical Translator Unit 25 (QOTU 25) carrier for 2.5G signals and its OC-48/STM-16 Optical Translator Port Module 25 (OTPM25) with twice the add/drop capacity in the same space of the original 2.5G OTUs.
- Per-wavelength protection switching with the Optical Unidirectional Protection Switched Ring (OUPSR) circuit pack to allow customers to carry and protect signals from unprotected devices, such as ATM switches or IP routers.
- Unamplified span support with OMU16/ODU16 with 5.5 db insertion loss
- Increased operations support with the TL1 Translator, TL1 over TCP/IP, and FTP software features for customers using high speed TCP/IP facilities for managing their systems.

Release 8.2 Features

For information on Metropolis® EON product features for Release 8.2, refer to Chapter 2.

□

2 Features

Overview

Purpose

This chapter summarizes the main features of Release 8.2 Metropolis® EON.

Introduction

Release 8.2 offers additional features to customers in the regional and metropolitan markets and builds on the tradition of long haul transport offered since Release 1, as well as the newer ring flexibility introduced in Release 7. The new features introduced in Release 8.2 give Lucent Technologies a product offering to respond to various customer requests for higher capacity in regional applications and for enhanced data services in metropolitan applications. Additional features eliminate operational costs.

Contents

The following sections are included in this chapter:

Release 8.2 Features	2-2

Release 8.2 Features

Overview

These Release 8.2 features consist of the following hardware and software changes:

- Regional Applications
- Enhanced Data Services
- Operational Improvements

The new Release 8.2 features are discussed in the following paragraphs.

Regional Applications

Metropolis® EON has the following features for regional applications:

- Upgrade to 32 channels using OMU32/ODU32 and the line heater circuit pack (LIHTR) which controls the OMU32/ODU32 temperature
- 10 Gb/s transmission with forward error correction (FEC) or strong FEC
- 32-channel amplifier with 33 dB gain and mid-stage access for dispersion compensation module (DCM)
- Dispersion compensation modules (DCMs) to support 10G long haul applications

Enhanced Data Services

Metropolis® EON has the following features for enhanced data services:

- OTPM universal broadband (UBB) circuit pack with hunt-and-lock as well as bit-rate provisioning for bit-rates 16 Mb/s to 2.5 Gb/s
- Data multiplexing OTU for FICON, Fiber Channel, ESCON, and GbE
- Enhanced low speed broadband (ELSBB) circuit pack
- Enhanced performance monitoring for data signals
- Optical Unidirectional Path Switched Ring (OUPSR) with multi-mode interface
- OUPSR operation with single add and drop OTUs

- Support for IBM geographically dispersed parallel sysplex (GDPS) environment

Operational Improvements

Metropolis® EON has the following features for operational improvements:

- "Easy Install" allowing a user to add channels without replacing any LBO on the OMU
- Operations with R8.0 Navis™ Optical Element Management System (EMS), formerly known as SNMS
- Software download at Navis™ Optical EMS using FTAM over OSI
- Operations with Telcordia™ NMA R11.1
- Operations with Navis™ Optical Network Management System (NMS) R7.0
- Operations with Telcordia™ TIRKS R19.5

Regional Applications

Upgrade to 32 Channels

Release 8.2 introduces the expansion from 16 to 32 channels. This feature is made possible by the design of the new OMU32 and ODU32 and associated LIHTR circuit packs for heater control. This feature allows customers to place more traffic on existing fibers without rolling traffic.

The 32-channel feature includes the following characteristics:

- Builds upon current system architecture
- OMU/ODU with 5.5dB and 8 dB insertion loss
- Interfaces at OC-192/STM-64, OC-48/STM-16, OC-12/STM-4, OC-3/STM-1, and broadband (16 Mb/s - 2.5 Gb/s)

OTUs for Channels 17 - 32

Release 8.2 introduces channels 17-32 for the 2.5G Quad OTU (QOTU) 46Ax. Thirty-two channels are also available for the UBB, the muxing OTU, and 10G OTUs.

10 Gb/s Transmission

Release 8.2 introduces 10 Gb/s transmission through the new 10G OTU circuit pack. This can be provisioned as an OC-192/STM-64 signal with forward error correction (FEC) or as an OCh10G signal with strong FEC.

Strong FEC is accomplished by adding a proprietary digital overhead that contains the FEC check bytes and the optical channel overhead (Och-OH), and transporting the resulting signal at a rate 15/14 times the OC-192 rate (approximately 10 Gb/s). The combination of the FEC and OCh-OH is known as the WaveWrapper™ or “digital wrapper”. Strong FEC enables high-speed transmission more reliably and over longer distances.

New 32-channel Amplifier

Release 8.2 introduces the LEA307, a 32-channel amplifier with 33 dB gain and mid-stage access for DCM. This amplifier will support 32 channels of 10G with engineering rules similar to those of the 16-channel LEA7B amplifier. This 32-channel support will allow the upgrade of existing routes to 32 channels.

DCM

Release 8.2 introduces dispersion compensation modules (DCMs) which allow greater route distances for 10 Gb/s signals.

Enhanced Data Services

OTPM Universal Broadband (UBB)

Release 8.2 introduces the Optical Translator Port Module (OTPM) universal broadband (UBB) circuit pack for data signals. This new circuit pack covers a range of signals from 16 Mb/s per second to 2.5 Gb/s (concatenated OC-48/STM-16). If the bit rate is provisioned as "unknown," the UBB will lock on the incoming bit rate and transport it without bit-rate provisioning. In the case of 16 Mb/s signal (ETR), bit rate provisioning is required.

Muxing OTU

Release 8.2 introduces the data 2:1 multiplexing/demultiplexing OTU (2:1 MUX-OTU). The 2:1 MUX-OTU multiplexes two signals of any one of the following types into a single 2.5G signal:

- Gigabit Ethernet
- Fiber Channel
- FICON
- Inter-system Channel (ISC)
- Inter-system Channel (ISC-2 with OFC)
- ESCON

A single 2:1 MUX-OTU circuit pack receives and transmits up to two services.As a result, up to 64 protected services and 128 unprotected services may be carried using the new multiplexing OTUs.

Enhanced Performance Monitoring for Data Signals

Release 8.2 introduces enhanced performance monitoring (PM) for data signals, based on new software and the new OTPM UBB. The 8-bit /10-bit encoding scheme is accessed to identify loss of frame (LOF) in Gigabit Ethernet, FICON, Fiber Channel, ESCON, and other signals which use 8B/10B encoding. This feature supports proactive maintenance of the Metropolis® EON system for data signals. Potential failures will be identified before a Loss of Signal (LOS) and reported as SD alarms to maintenance personnel. As a result, maintenance personnel will be able to address problems before they become critical.

OUPSR Switch on Signal Degrade

In Release 8.2 the OUPSR provides additional switch initiation criteria based on SD conditions from the UBB circuit pack and SONET/SDH OC-3/STM-1, OC-12/STM-4, and OC-48/STM-16 OTU circuit packs. The 8-bit /10-bit encoding scheme is used to identify signal degrade (SD) in Gigabit Ethernet, FICON, Fiber Channel, and other signals using 8bit/10bit encoding. SONET/SDH overhead is used to switch SONET/SDH signals.

The OUPSR will switch to the protection path based on TCA levels (pre-set 10^{-6} BER threshold) and a protection switch notification will be sent to maintenance personnel. As a result, maintenance personnel will be able to address problems before they become critical.

Bit-rate Provisioning

Release 8.2 introduces the capability to monitor violations of capacity agreements between service providers and enterprise customers. The service provider will provision the bit rate expected on the new UBB OTPM. If the bit-rate inserted is other than what is provisioned, a notification will be sent to the service provider in the form of an alarm. The alarm severity will be provisionable by the service provider.

Enhanced Low Speed Broad band (ELSBB)

Release 8.2 introduces support for ISC2 with Open Fiber Control (OFC), an IBM proprietary protocol used in legacy GDPS environments. The ELSBB supports 16 Mb/s to 1.06G, including ISC-2 with OFC.

Server Applications

With Release 8.2, Metropolis® EON now supports Geographically Dispersed Parallel Sysplex (GDPS), an IBM-developed technology, that provides the capability to:

- manage the remote copy configuration and storage subsystem(s),
- automate Parallel Sysplex operational tasks, and
- perform failure recovery from a single point of control.

GDPS combines the characteristics of redundant applications, servers, and storage in the data center with a backup data center. Processing can switch to the backup data center automatically to minimize downtime. Data is mirrored in the backup data center to facilitate a quick recovery time.

In legacy GDPS, support of GDPS requires the support of Optical Fiber Control (OFC), Inter-System Coupling (IS2) links at 1.06G, and External Timing Reference (ETR). The new IBM Z-series processor no longer requires OFC in GDPS applications. Inter-System Coupling (IS3) links at 2.12G are used without OFC.

OFC, an IBM protocol developed to support safety measures in the event of a fiber cut, controls the shutdown of lasers when the received signal is no longer present at the receiver interface. ISC channels provide the connectivity required for data sharing between the Central Facility and the systems directly attached to it. ETR channels support timing information required by OFC and ISC. ETR signals may not be protected at the optical layer using OUPSR. In addition, ETR signals are not supported with the hunt-and-lock feature (see Chapter 4, UBB circuit pack for more information). Instead, ETR signals must be provisioned.

The following table describes how Metropolis® EON supports IBM GDPS applications.

Table 2-1 Geographically Dispersed Parallel Sysplex (GDPS)

Service	Client-side Interface	Client-side Wavelength	Add OTU
FICON	Multi-mode	850 nm	2DM25: 41Mx
	Multi-mode	1310 nm	2DM25: 41Mx, ELSBB: 44Cx, UBB: 47Ax
	Single-mode	1310 nm	2DM25: 41Mx, ELSBB: 44Cx, UBB: 47Ax
ETR, CLO	Multi-mode	1310 nm	ELSBB: 44Cx, UBB: 47Ax
ISC2	Multi-mode	1310 nm	2DM25: 41Mx, ELSBB: 44Cx
	Single-mode	1310 nm	2DM25: 41Mx, ELSBB: 44Cx
ISC3 in Peer Mode	Multi-mode	1310 nm	ELSBB: 44Cx
	Single-mode	1310 nm	UBB: 47Ax
ESCON	Single-mode	1310 nm	2DM25: 41Mx, ELSBB: 44Cx, UBB: 47Ax
	Multi-mode	1310 nm	2DM25: 41Mx, ELSBB: 44Cx, UBB: 47Ax

For service providers who offer various Service Level Agreements (SLAs) based on the end-customer willingness to pay, the Bit-Rate Provisioning feature with the Universal BroadBand (UBB (add) for multi-mode and single-mode interfaces is available for bit-rates between 16 Mb/s to 2.5 Gb/s.

For cost-effective transport, 64 protected services and 128 unprotected services may be carried using the new multiplexing OTUs. Up to 2 services (any mix of Fiber Channel, ISC-2, GbE, ESCON, and FICON) may be multiplexed into one wavelength.

New OUPSR Operation

Beginning with Release 8.2, the OUPSR circuit pack can operate with a single add and a single drop OTU. This is accomplished by placing the OUPSR between the OMUs/ODUs and the OTUs, instead of between the OTUs and the client signal. In this configuration, switching is based on LOS rather than SD. The LEP2 OUPSR with 1310 single-mode interface will be used in this configuration.

OUPSR with Multi-mode Interface

With the introduction of the LEP3 OUPSR protection circuit pack with multi-mode 1310 nm interface in Release 8.2, Metropolis® EON now supports both multi-mode and single-mode inputs. The new OUPSR protection device with multi-mode 1310 nm interface will be used in the protected OTU configuration, where the protection device is receiving inputs directly from the client source.

Operational Improvements

Easy Install

With Release 8.2 equipment, a user can connect fibers between OTUs/OTPMs and OMUs/ODUs without changing any LBOs. This new Release 8.2 feature greatly reduces installation time. See Chapters 5, 6, and 10 for more information on Easy Install.

□

3 Network Topologies

Overview

Purpose

This chapter describes Metropolis® EON configurations, applications, and the basics of its transmission technology. Network topologies are constrained by engineering rules, which are defined in Chapter 5, "System Planning and Engineering."

Additional Information

For more information about the physical components of Metropolis® EON, see Chapter 4, "Product Description."

For information about Lucent products that are compatible with Metropolis® EON, see the documents referenced in the section "Related Documentation" in "About This Information Product."

Contents The following sections are included in this chapter:

Basic Metropolis® EON Building Blocks	3-3
Linear Applications	3-4
DCC Considerations for Linear Applications	3-11
Ring Applications	3-14
Metropolitan Rings	3-15
Large Ring Applications	3-22
DCC Considerations for Ring Applications	3-25
Managing Ring Traffic	3-31

Basic Metropolis® EON Building Blocks

Configuration Overview

Metropolis® EON can be configured in a variety of ways, ranging from single span, two terminal systems to complex multi span rings involving multiple repeaters and ring terminals. The information in this section describes basic linear and ring configurations in which Metropolis® EON can be used.

All these network configurations are engineered using basic network building blocks:

- End Terminal
- Ring Terminal
- Repeater

Each of these building blocks is described in more detail in Chapter 4, “Product Description.”

□

Linear Applications

Overview

Linear networks are terminated with end terminals and may be configured with the three network configuration building blocks: End Terminals, Repeaters, and Ring Terminals. Metropolis® EON supports both single span and multi span linear applications.

Linear applications may be deployed with either 16- or 32-channel optical amplifiers. These include:

- LEA307 and LEA207 (32-channel),
- LEA7B and LEA107B (16-channel)

Single Span Linear Applications

Single span (point-to-point), linear applications consist of two end terminals. These applications are available with three levels of optical amplification:

- Two-OA
- Single-OA
- Zero-OA (32-channel system only)

Two-OA Single Span Linear Applications

For long spans two-OAs are used to prevent signal degradation. The following figure shows a single, bidirectional Metropolis® EON span with two-OAs in each direction.

Important! In the figures throughout this chapter (Optional) denotes that OTUs are not required when the transmitter/receiver of the optical channel source are Metropolis® EON-compatible. The label OTU is used here to refer to OC-48/STM-16 OTUs/ OTPMs, GbE OTUs, OC-12/STM-4 OTPMs, or 10G OTUs OC-3/STM-1 OTPMs, or 16 Mb/s - 2.5 Gb/s UBBs, or 16 Mb/s - 1.06 Gb/s OTPMs.

Figure 3-1 Metropolis® EON Single Span with Two-OA Operation

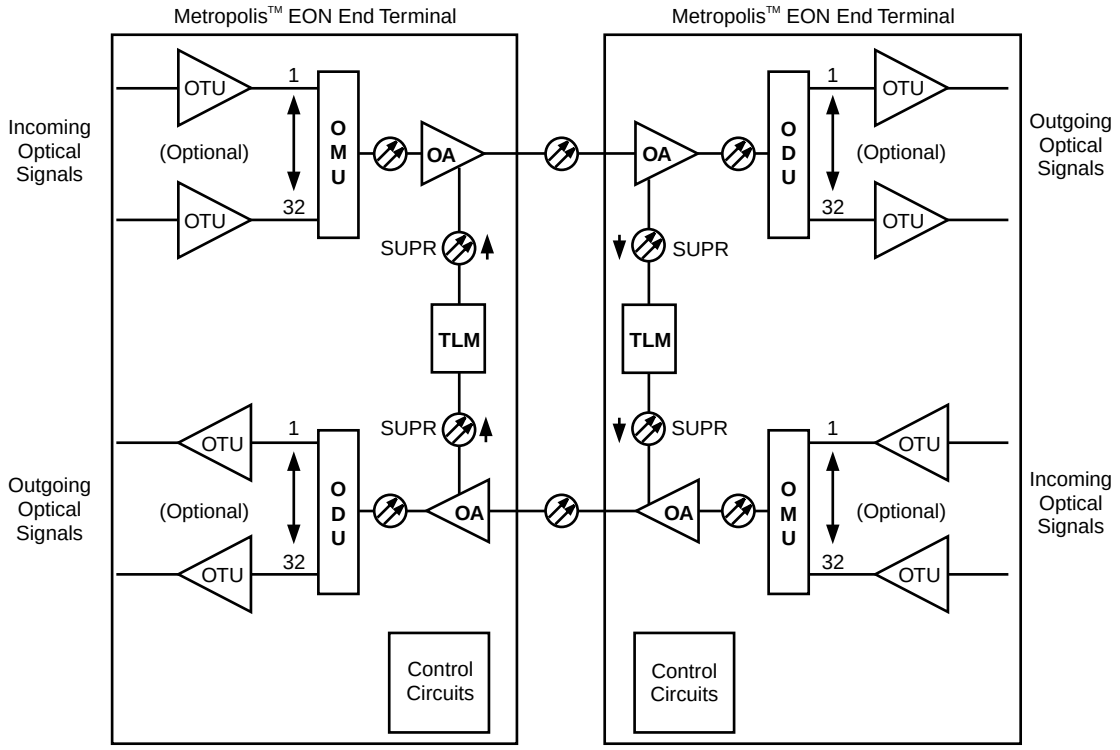

Single-OA Single Span Linear Applications

Over shorter span lengths, pre-amplification before the receive-end ODU is not necessary because signal degradation is less prevalent. The following figure shows a single, bidirectional Metropolis® EON span in a single-OA, single span application. One OA is used on the transmit side of the optical fiber without an OA on the receive end. At the receive end, the line interface receive (LIRCV) unit will pass the supervisory channel to the telemetry (TLM) circuit pack. Except for the absence of a receive pre-amplifier, the operation of this type of end terminal is the same as two-OA end terminals.

Figure 3-2 Metropolis® EON Single Span with Single-OA Operation

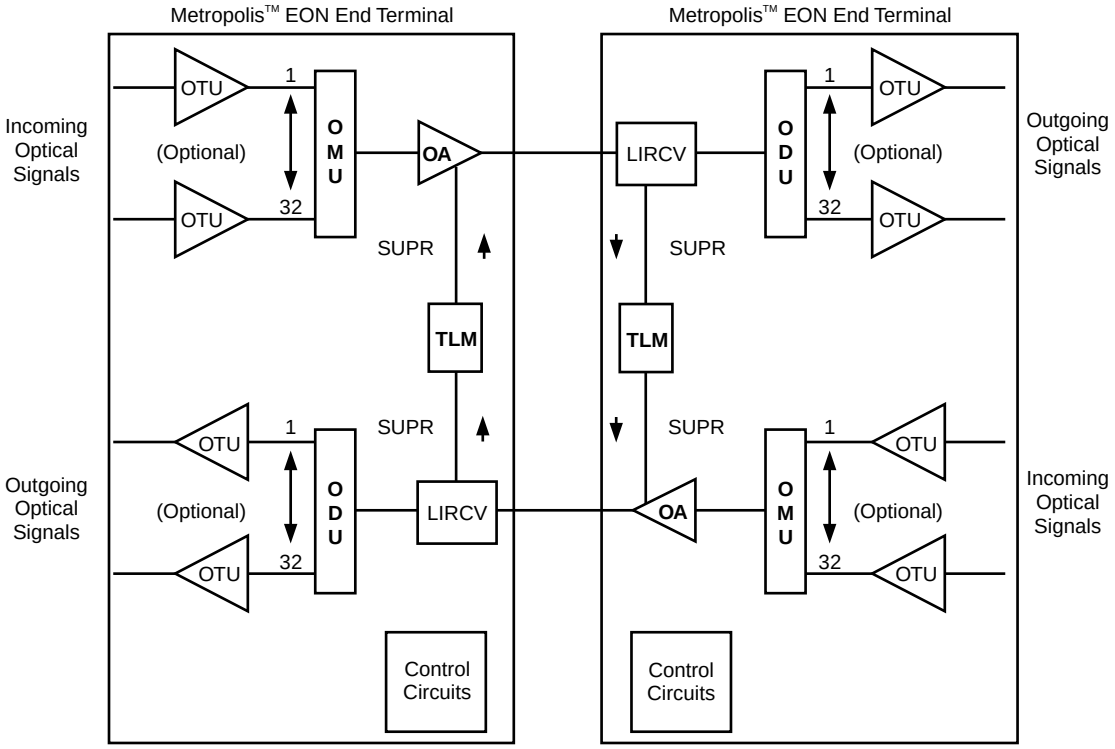

EON = Metropolis™ Enhanced Optical Networking (EON)

nc-metro-019

Zero-OA Single Span Linear Applications

For very short, metropolitan spans, a zero-OA application is available in R8.0. At the transmit end of the application the line interface transmit (LITX) unit adds the supervisory channel from the TLM into the optical multiplexer (OMU16) output. At the receive end the line interface receive (LIRCV) unit passes the supervisory channel to the TLM. The following figure shows a single span, zero-OA application.

Figure 3-3 Metropolis® EON Single Span with Zero-OA Operation

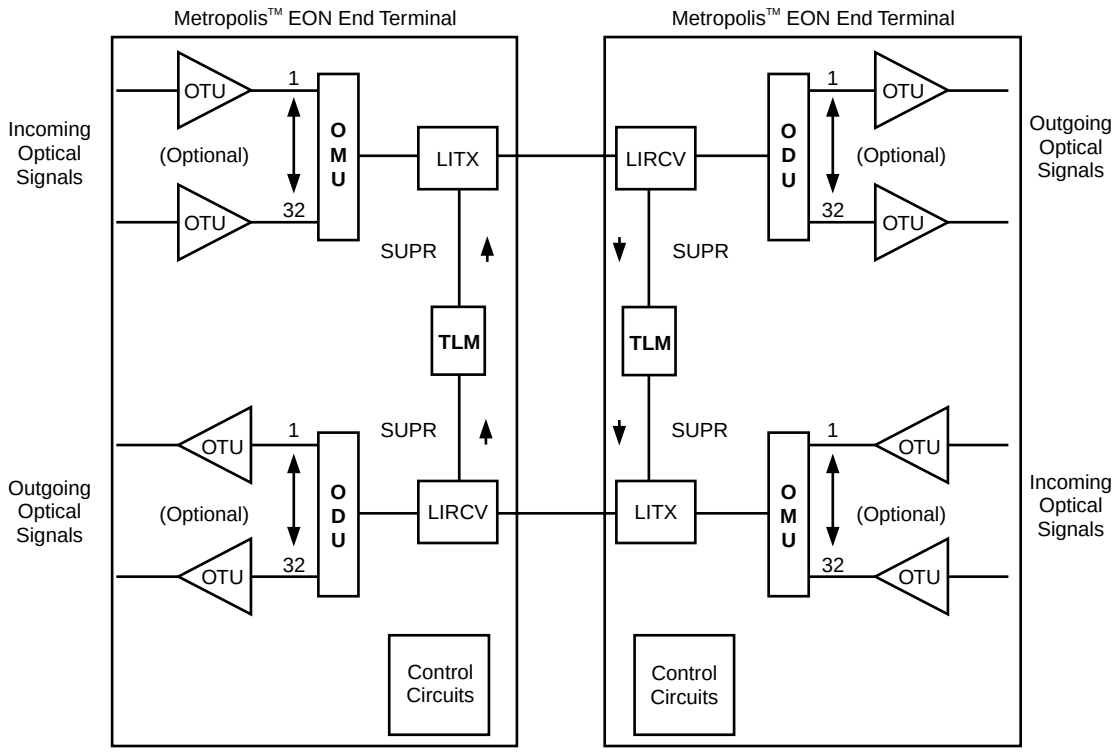

Multi Span Linear Applications

Multi span linear applications may be configured with any of the three network configuration building blocks: End terminals, Repeaters, and Ring Terminals.

Linear Applications with Repeaters

The following figure shows a two-span Metropolis® EON with one repeater.

Figure 3-4 Metropolis® EON Multiple Span System with Repeaters (two-span system shown)

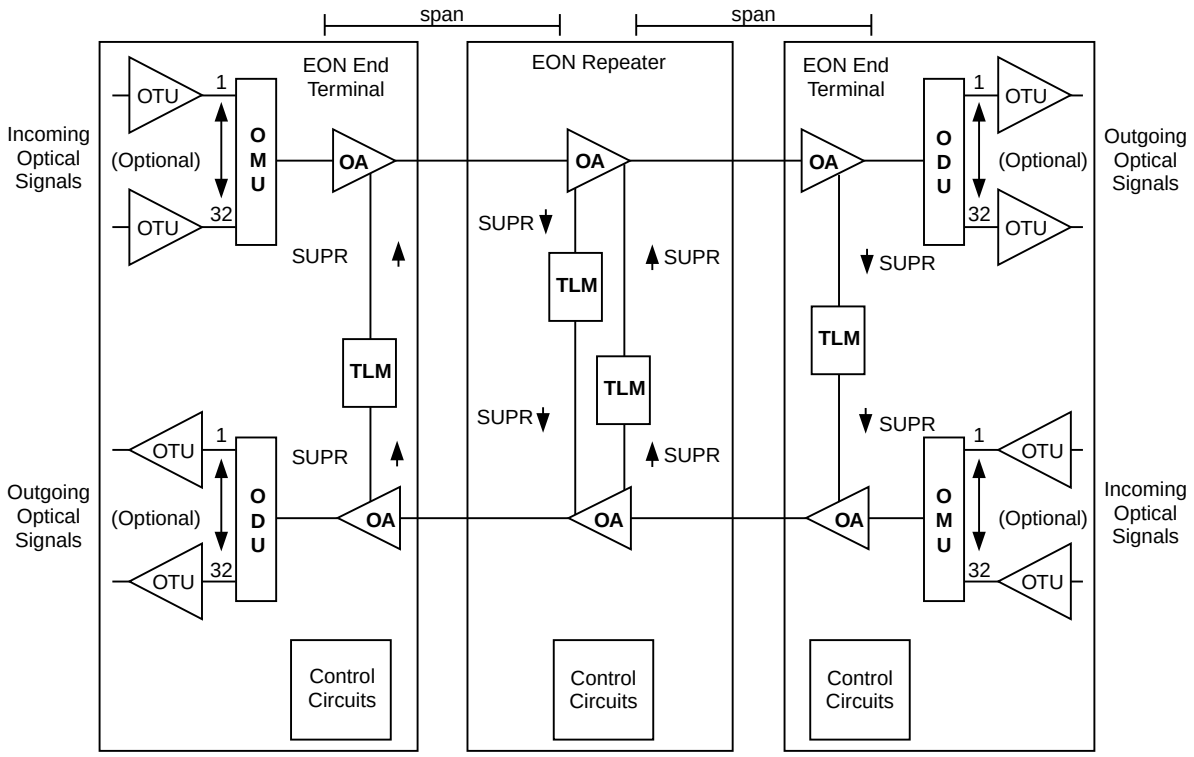

EON = Metropolis™ Enhanced Optical Networking (EON)

nc-metro-020

Linear Applications With Ring Terminals

Ring terminals may be used in linear applications to:

- Add/drop signals to client equipment
- Extend the distance of the network by regeneration of the signals

The following figure is an example of how Metropolis® EON systems can be concatenated for routes extending beyond the span capability of the OA.This figure shows a linear application with 1 end terminal, up to 7 repeaters, a ring terminal used for regeneration, and a repeater in the extended line.

Figure 3-5 Linear Regenerator Application

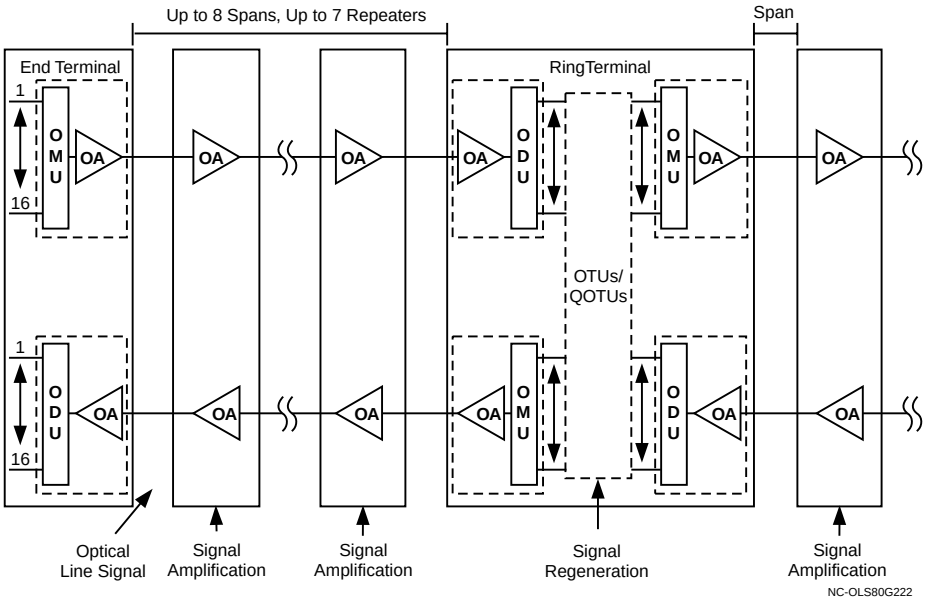

The following figure shows how a ring terminal may be used to add/drop signals in a linear application. A total of 8 channels are being transported. Five of the channels are passed through and three are added/dropped to client equipment.

Figure 3-6 Add/Drop Using Metropolis® EON-compatible Optics and OTU Interfaces

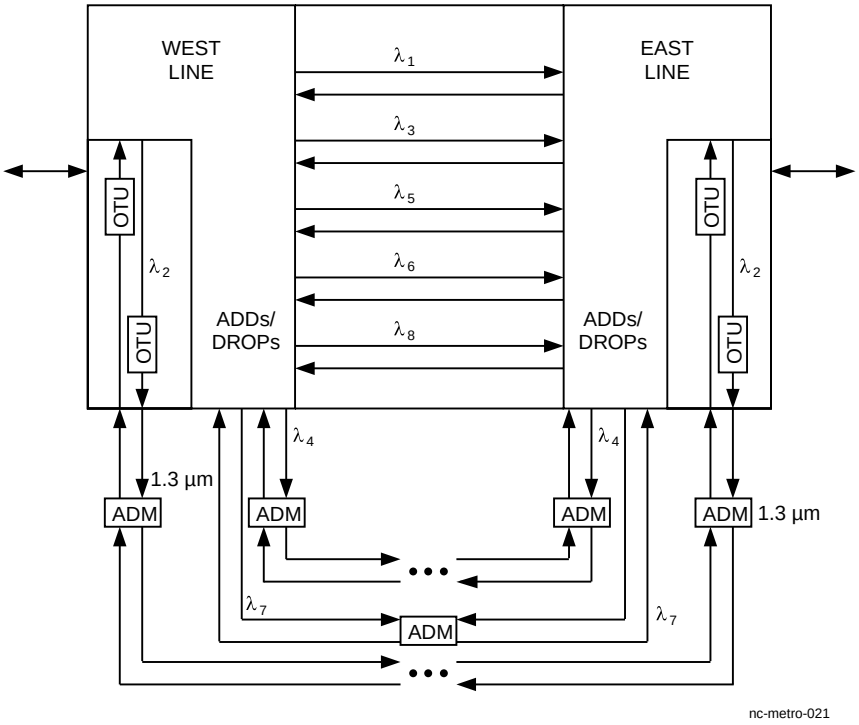

In the previous figure, wavelengths 1, 3, 5, 6, and 8 are carrying optical channels that are being expressed through this location without OTUs. Wavelengths 4 and 7 are provided from ADMs using Metropolis® EON-compatible optics. Wavelength 2 uses an OT to interface to an ADM with a standard interface.

DCC Considerations for Linear Applications

Introduction

The Data Communications Channel (DCC) is carried though the repeaters and ring terminals of a linear application. In addition, Metropolis® EON supports the inclusion of multiple linear applications into one network by passing the DCC from one end terminal to another. A DCC can support up to 50 NEs (repeaters, ring terminals, and/or end terminals) as shown in the following figure.

Figure 3-7 Multi Span (Point-to-Point) Linear Chain

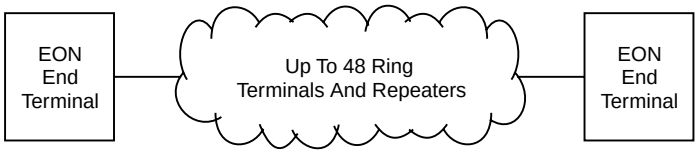

EON = Metropolis™ Enhanced Optical Networking (EON)

DCC Extension

DCC extension between linear applications may be implemented in one of two ways by using either the TLM circuit pack (Figure 3-8, “DCC Extension using TLM”) or the LAN relay pack (Figure 3-9, “DCC Extension using LAN Relay Pack”).

Figure 3-8 DCC Extension using TLM

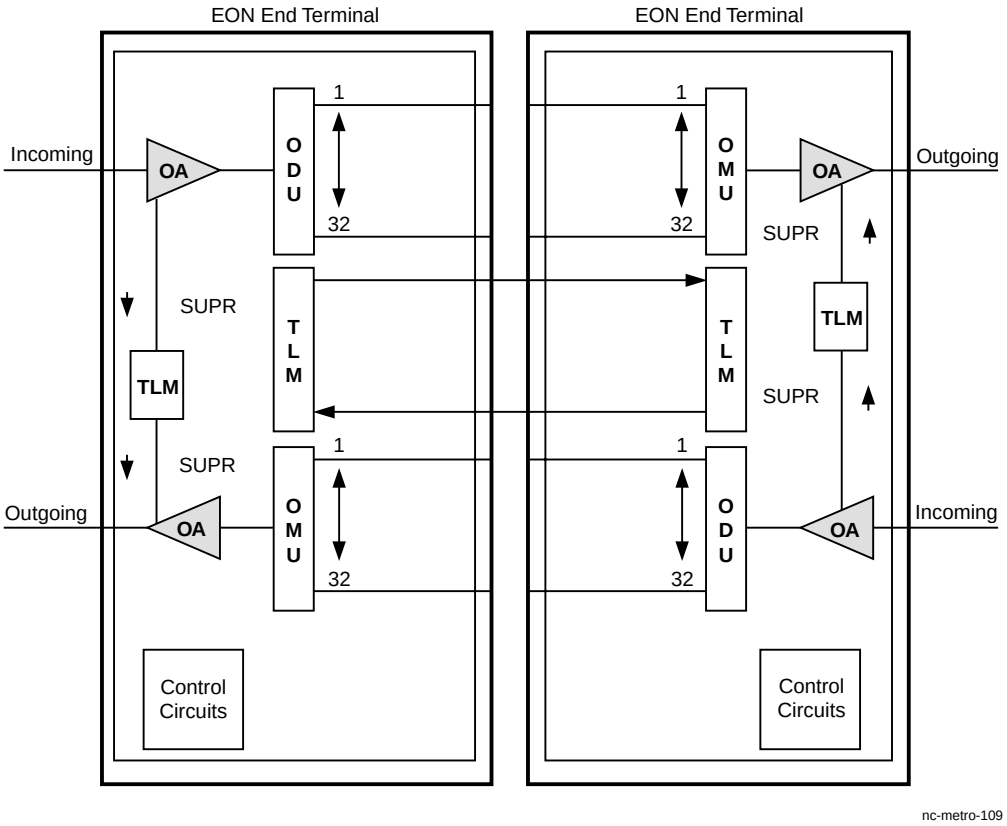

Figure 3-9 DCC Extension using LAN Relay Pack

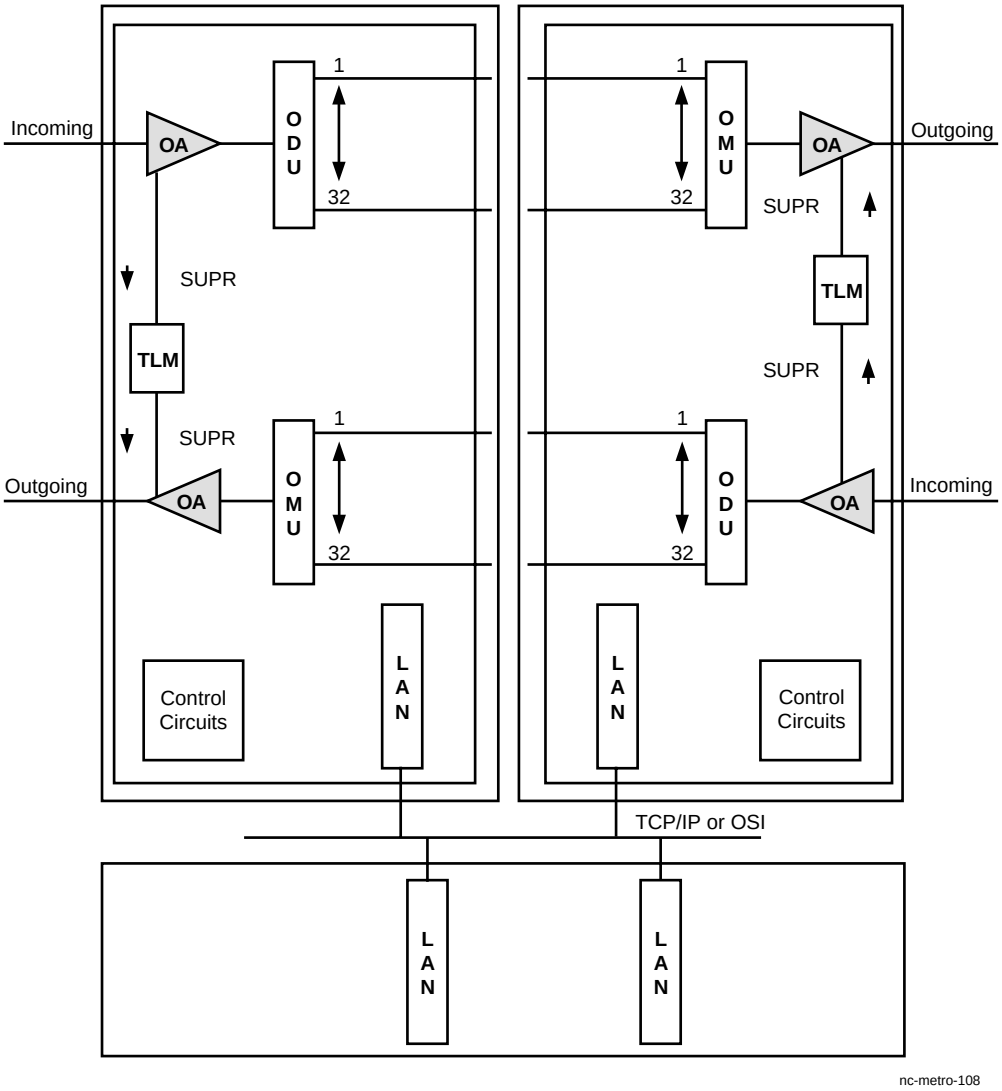

Ring Applications

Introduction

Ring applications are not terminated at end terminals. Instead, ring applications consist of a series of multiple ring terminals and repeaters where individual channels may be terminated at any one of the multiple ring terminals.

The ring terminal faces two directions. In each direction it supports diverse levels of optical amplification as required by the span distance on each side of the ring terminal. Therefore, the ring terminal can support a two-OA, a single-OA, or zero-OA application on one side and another two-OA, single-OA, or zero-OA application on the other side.

□

Metropolitan Rings

Introduction

For the sake of clarity and for purposes of discussion in this document, metropolitan rings are defined as those that require no optical-to-electrical-to-optical (O-E-O) conversion for pass through traffic. This definition automatically rules out rings with bidirectional line-switched ring (BLSR) protection from the scope of this discussion. BLSR protection would be typically implemented with a TDM switch at each node. Therefore, there would be an O-E-O conversion at each node as the signal is dropped from the DWDM system to the TDM system.

The maximum circumference of a Metropolis® EON metropolitan ring is determined by:

- the dispersion characteristics of the OTUs,
- the power budget of the amplifiers, and
- the insertion loss of the OMUs/ODUs.

See Chapter 5 for more details on the parameters associated with this information.

The maximum number of add/drop nodes in a Metropolis® EON metropolitan ring is currently set at:

- five nodes when using 46Ax and 47Ax OTPMs and
- four nodes when using all other OTUs.

Metropolitan Ring with USPR Protection

The following figure depicts a metropolitan ring with Metropolis® DMX terminals managing the traffic and Metropolis® EON transporting traffic around the ring. The service path is between A and B. The protection path goes from A to D to C to B. The protection scheme is unidirectional path-switched ring (UPSR) and the longest path for any channel is three spans (A to D, D to C and C to B). No regeneration is required for through traffic as long as the actual distances are supported by the dispersion characteristics of the OTUs.

Figure 3-10 Metropolitan Ring with UPSR Protection

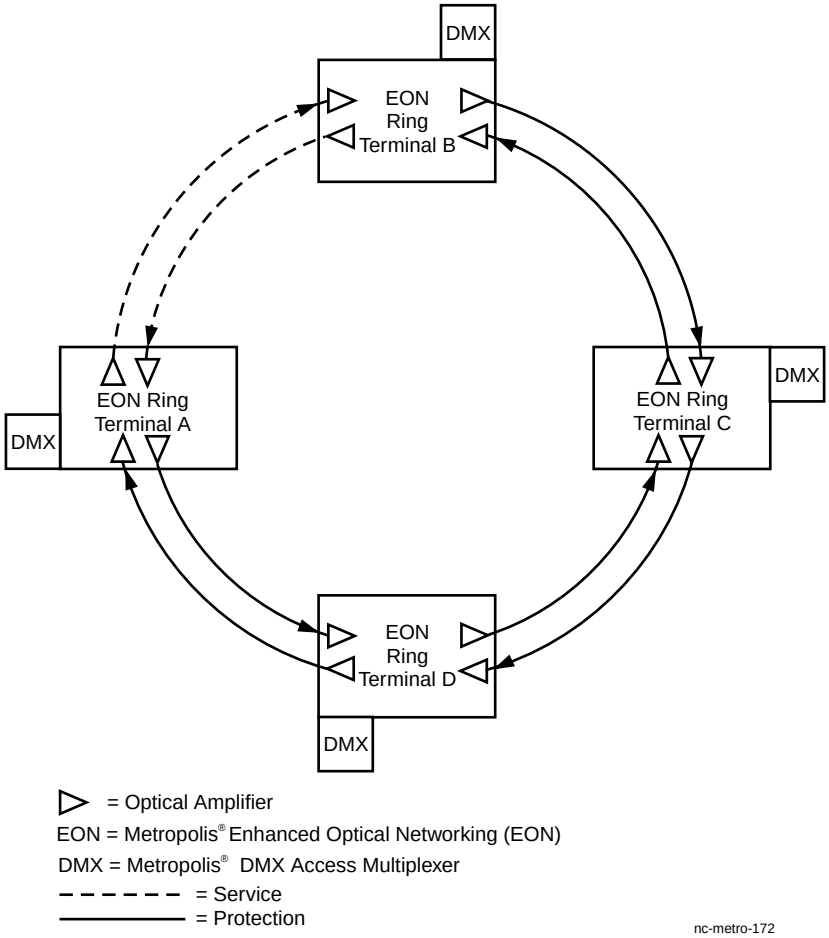

Note that, if traffic consists of data signals or OC-48/STM-16 traffic and the 46Ax or 47Ax OTPMs are used, the metropolitan ring may consist of 5 ring nodes. In this case, the longest path for any channel is four spans (A to E, E to D, D to C, and C to B). The maximum circumference of this ring is 360 km, set by the dispersion characteristics of these OTPMs.

Metropolitan Two-OA and One-OA Rings

The following figure depicts a ring terminal supporting two-OA spans on both sides. One channel is being added/dropped in this terminal and one channel is passed through.

Figure 3-11 Two-OA/Two-OA Metro Ring Terminal

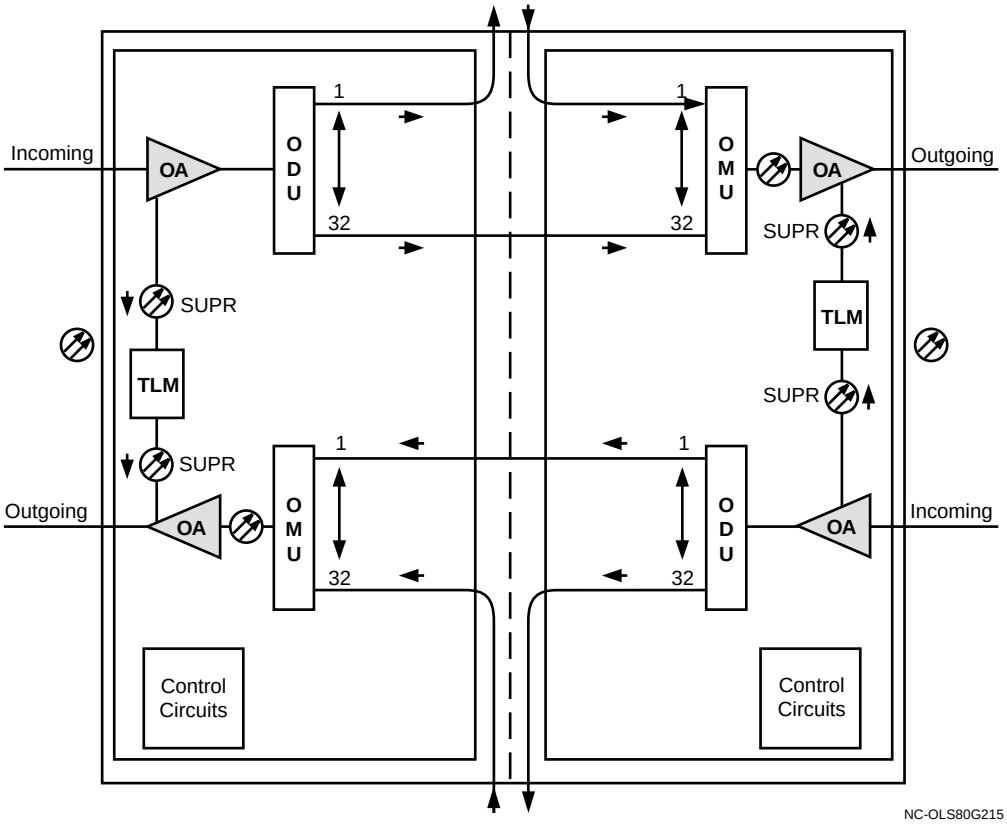

The following figure shows a 4-node ring in which all spans require both a booster amplifier and a receiving amplifier. As a result, all four nodes use two-OA/two-OA ring terminals.

Figure 3-12 Two-OA 4-Node Ring

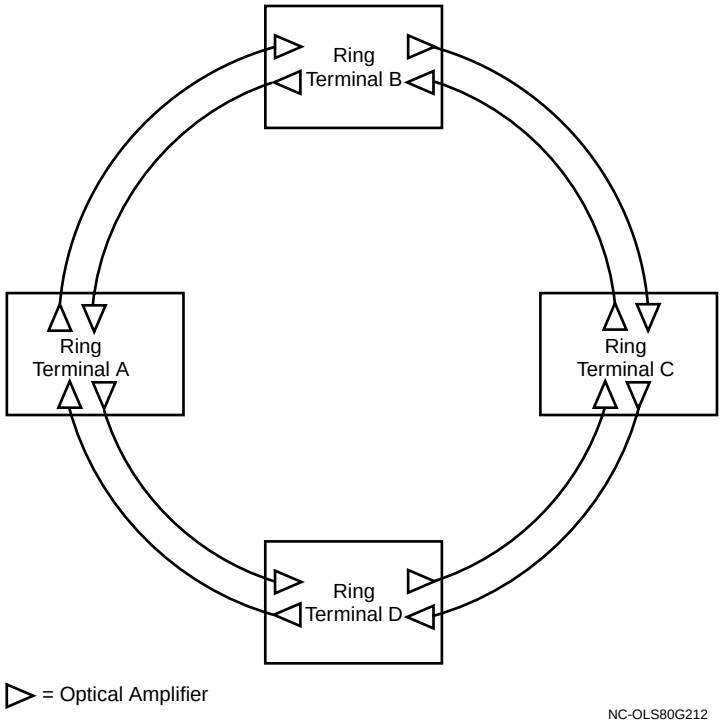

Single-OA Ring Terminals

The following figure illustrates a ring terminal supporting a one-OA span on both sides.

Figure 3-13 Single-OA/Single-OA Metropolitan Ring Terminal

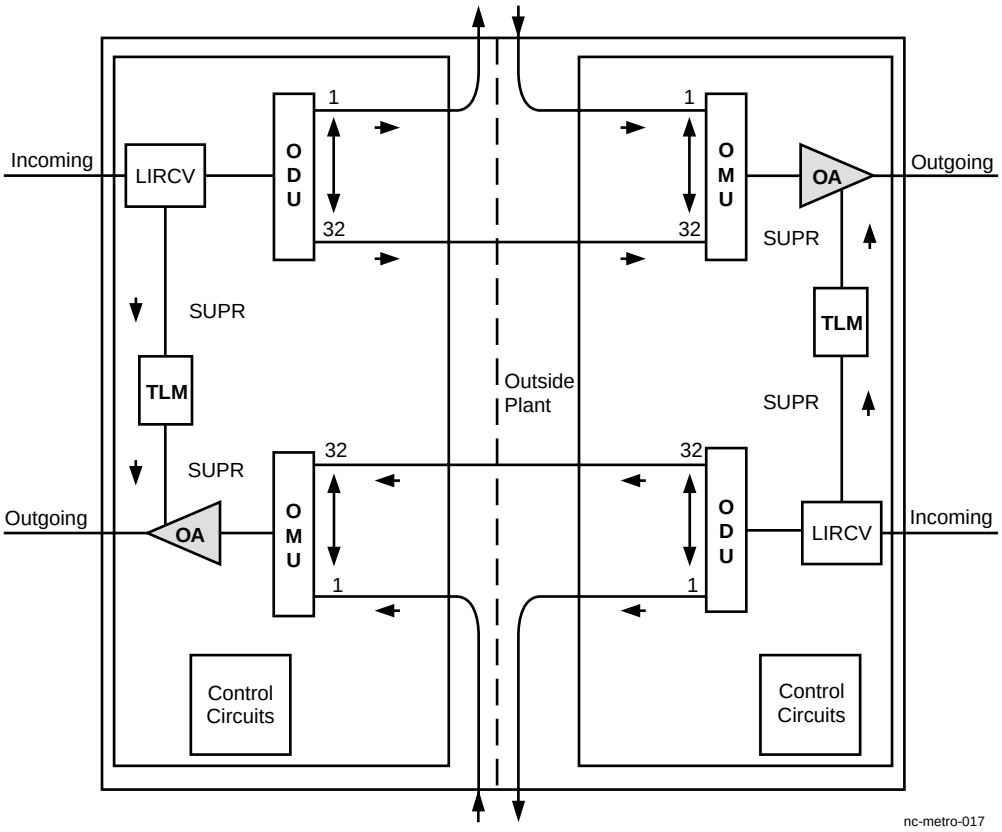

The following figure shows a 4-node ring in which the span distances do not require a receiving amplifier. Therefore, all 4 four nodes in this ring use one-OA/one-OA ring terminals.

Figure 3-14 One-OA 4-Node ring

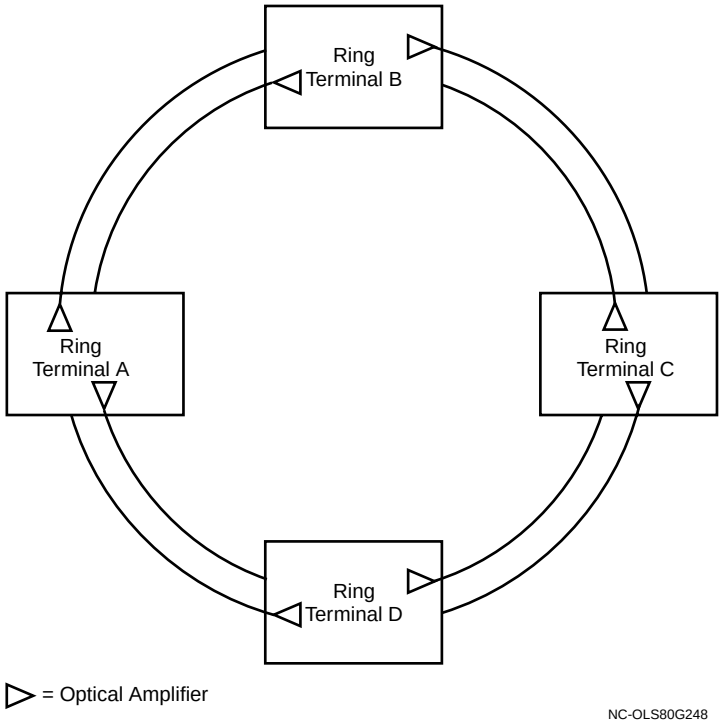

Metropolitan Hybrid Rings

The following figure shows a ring application with 4 ring terminals. This figure is an example of a hybrid ring where span A-B is a 2-OA span with a repeater, span B-C and span C-D are single-OA spans and span D-A is a two-OA span. Therefore, Ring Terminal node A uses a two-OA/two-OA ring terminal; node B uses a two-OA/one-OA ring terminal; node C uses a one-OA/one-OA ring terminal; and node D uses a one-OA/two-OA ring terminal.

Figure 3-15 Metropolitan Hybrid Ring Four-Node Ring Terminals

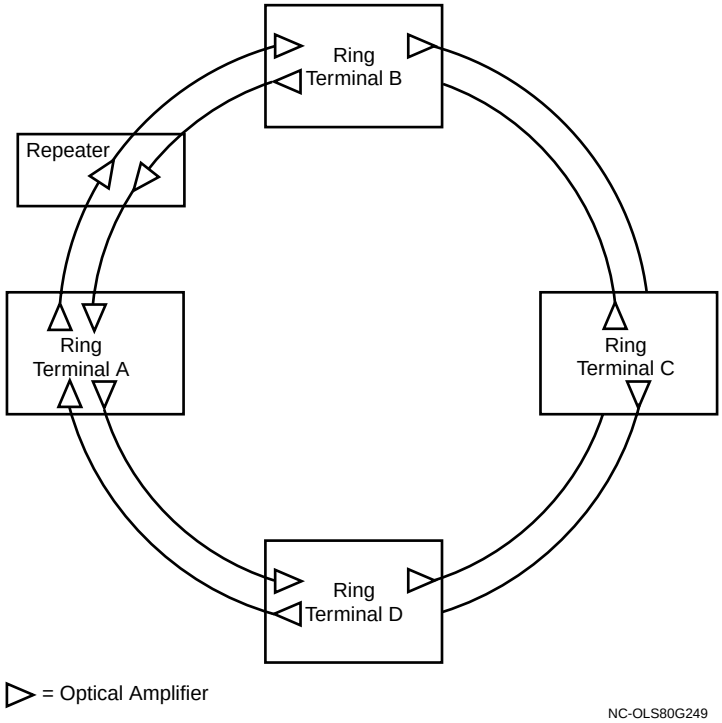

Large Ring Applications

Overview

When a ring consists of more than five nodes or when the distances are not supported by dispersion characteristics of OTUs, signals will require regeneration. With the OTU circuit packs and/or the OTPMs, the Metropolis® EON can be used to create very large ring networks where express wavelengths bypass intermediate offices without going through terminating equipment.

Large ring applications are built with two-OA ring terminals and repeaters. The Engineering Rules in Chapter 5 define the levels of optical amplification as well as regeneration requirements for any particular ring application.

Sometimes a metropolitan ring may be servicing mostly local traffic, with the exception of a small number of signals, which must be transported to a larger ring. Metropolis® EON supports this type of situation by allowing signals from terminating equipment in one Metropolis® EON ring to be terminated on a second Metropolis® EON ring.

The following figure depicts such a situation where most of the traffic is being transported in Metropolis® EON Ring 1 and Metropolis® EON Ring 2. However, some traffic is connected between Ring 1 and Ring 2. The dashed lines in this figure show a channel being terminated on Metropolis® EON Ring 1 at Ring Terminal B and Metropolis® EON Ring 2 at Ring Terminal D.

Figure 3-16 A Signal Sharing a Large Ring and a Metropolitan Ring

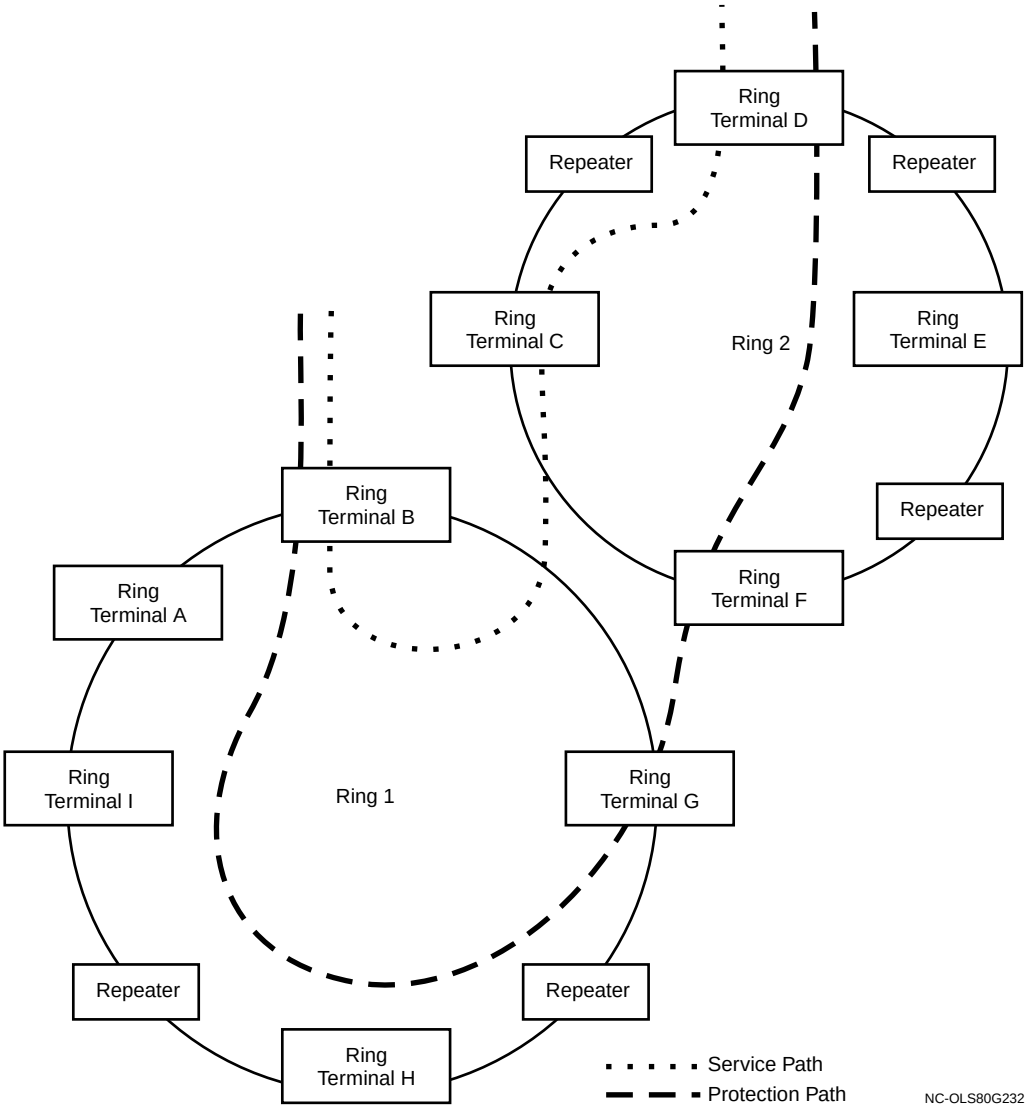

The protection (longer) path (D-E-F-G-H-I-A-B) of the channel shown in the previous figure will require regeneration because the path passes through more than four add/drop nodes. The service (shorter) path (D-C-B) also shown in this figure will not require regeneration if the distances are supported by the dispersion characteristics of the OTUs.

□

DCC Considerations for Ring Applications

Overview

This section describes the following ways of establishing DCC connectivity between the two sides of a ring node:

- DCC connectivity using TLM pack
- DCC connectivity using LAN circuit pack and Ethernet Cat5 crossover adapter
- DCC connectivity using LAN circuit pack and hub equipment
- DCC connectivity using LAN circuit pack

This section also describes the following way of establishing DCC connectivity between two ring nodes in two separate rings: DCC connectivity using LAN circuit pack and hub equipment. In Release 8.1 the whole ring map will be discovered, no matter which solution is chosen.

DCC Connectivity between two ring nodes in two separate rings

Just as the DCC in multiple linear applications may be connected to form a single network, the DCC in multiple rings may be connected to form a single DCC network. In this way multiple rings may be managed centrally at a single location.

DCC extension in ring applications may be implemented at a ring node. In a ring terminal the TLM circuit pack may be used to achieve a network of up to 50 NEs (see Figure 3-17). Alternatively as shown in Figure 3-18, the LAN relay pack may be used to achieve a network of 50 NEs.

Figure 3-17 DCC Extension via TLM

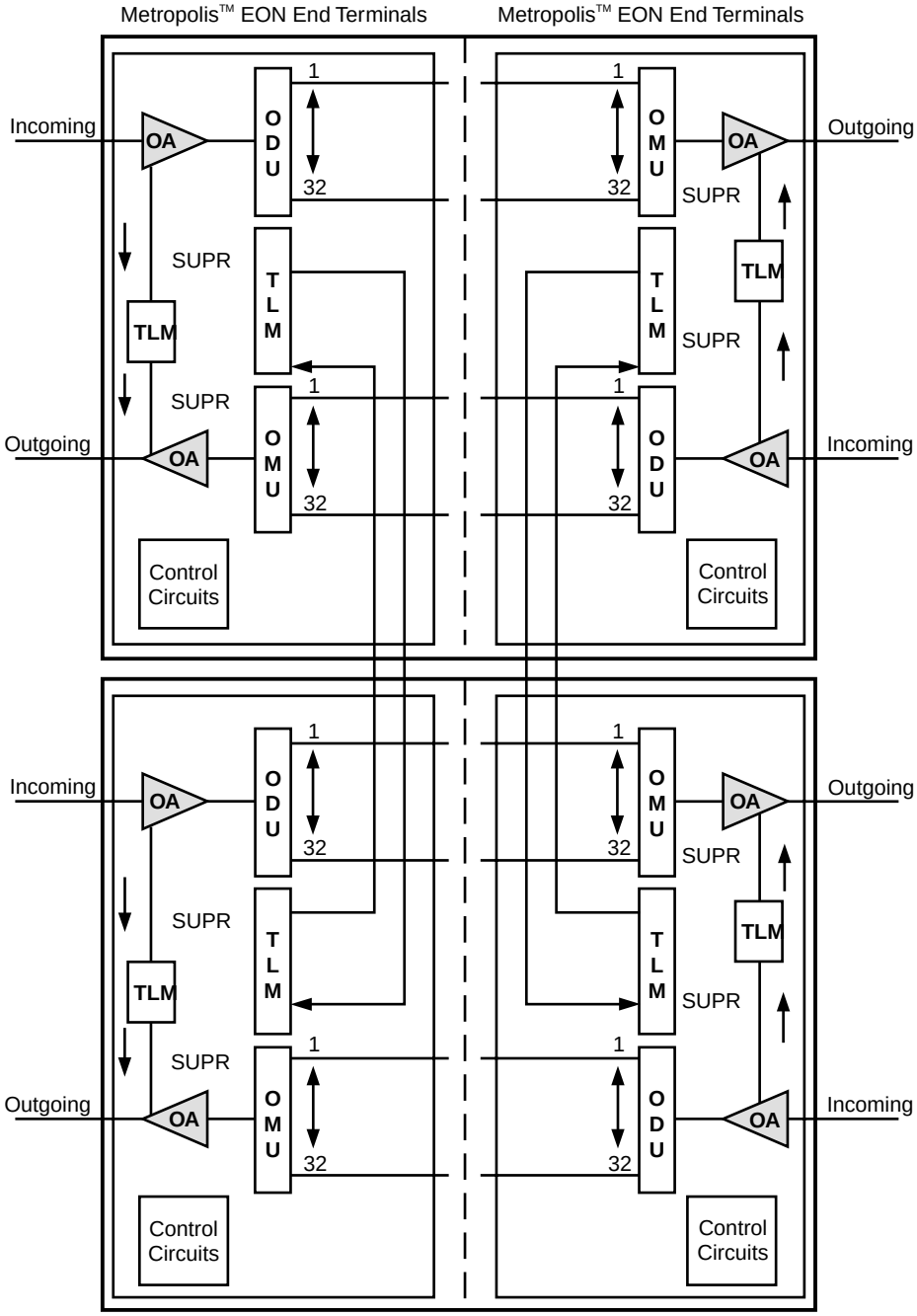

EON = Metropolis™ Enhanced Optical Networking (EON)

nc-metro-22

Figure 3-18 DCC Extension via LAN

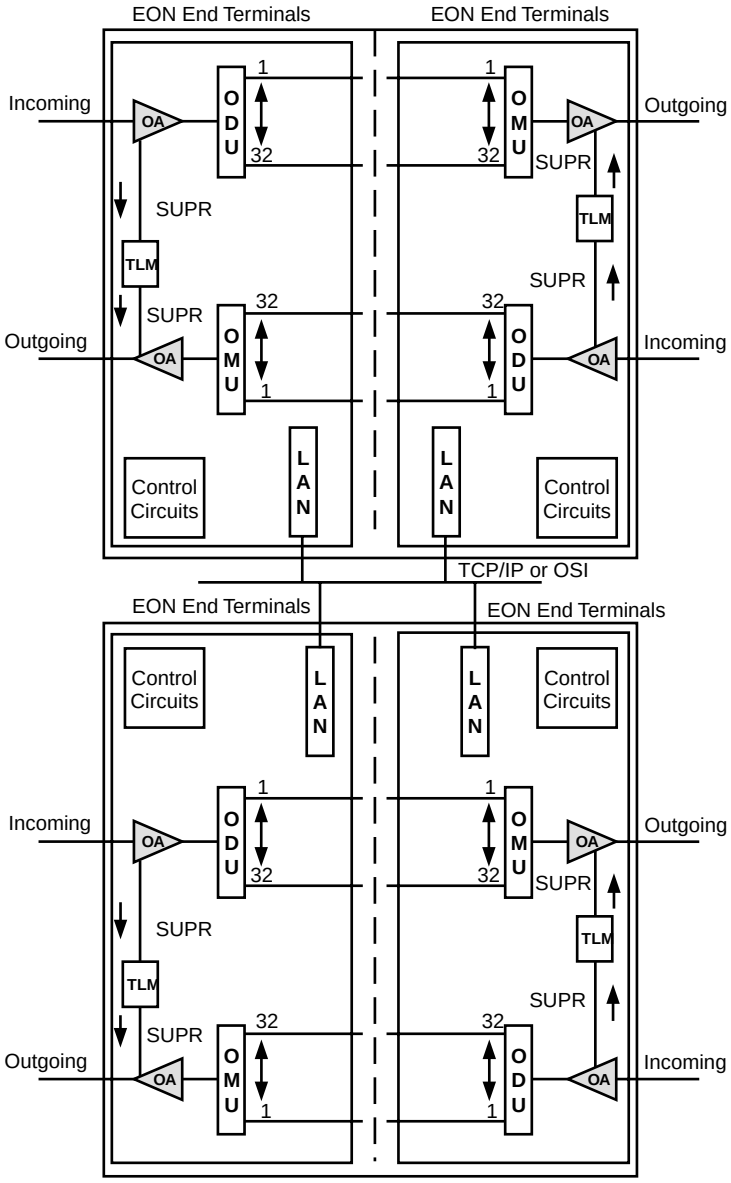

EON = Metropolis™ Enhanced Optical Networking (EON)

nc-metro-016

DCC connectivity between Two Sides of Ring Node

The following figures show different ways to share DCC between two sides of a ring node.

As shown in the following figure, DCC connectivity between two sides of a ring node may be established by installing LAN (IAOLRP) circuit packs into the 1B slots of the two shelves and connecting them with a straight LAN cable and a crossover adapter. (Note that you can also use a crossover LAN cable and an RJ45 to DB15 adapter.) This solution may be used only if two shelves are collocated. Also, this solution cannot be used for OS monitoring nodes or for nodes passing DCC to other rings.

Figure 3-19 DCC Connectivity via LAN Cable with Crossover Adapter

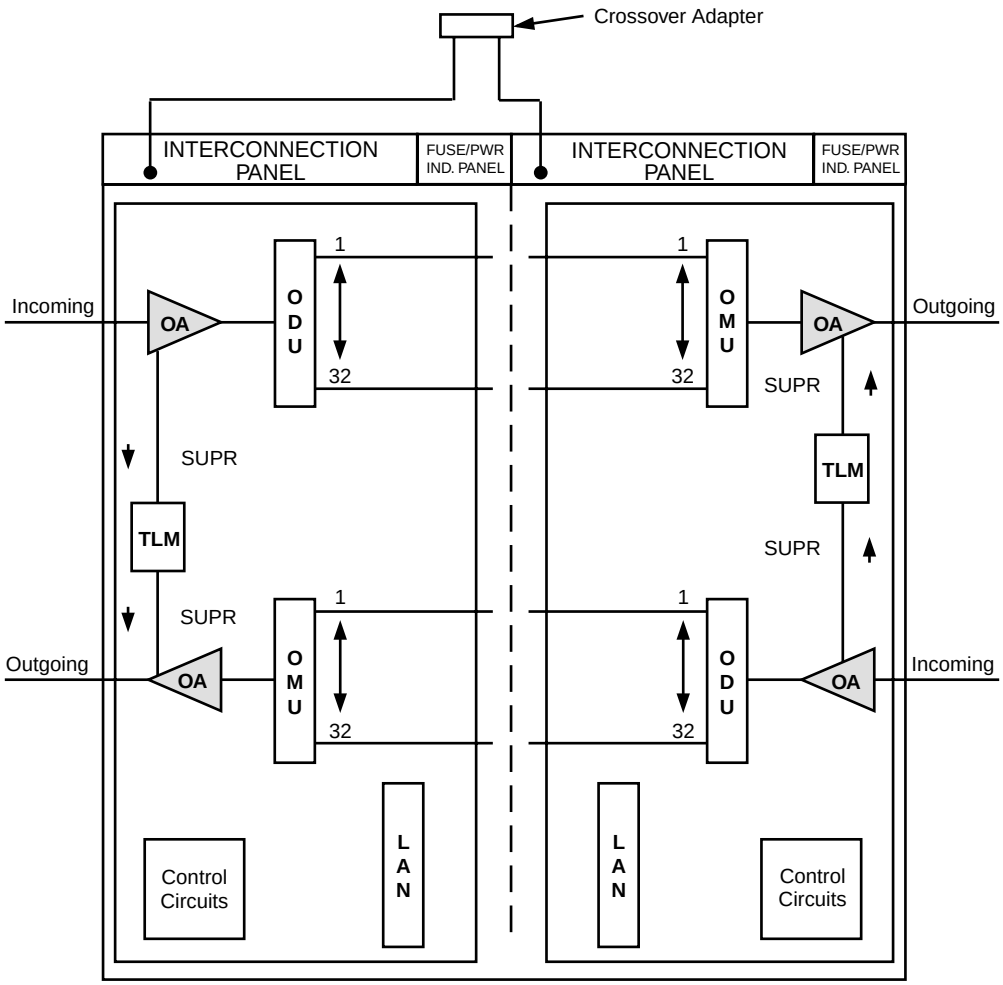

As shown in the following figure, DCC connectivity between two sides of a ring node may be established by installing LAN (IAOLRP) circuit packs into the 1B slots of the two shelves and connecting them to hub office equipment. This solution may be used whether the two shelves are collocated or not. Also, this solution may be used in OS monitoring nodes and nodes passing DCC to other rings.

Figure 3-20 DCC Connectivity via LAN Cable and Hub

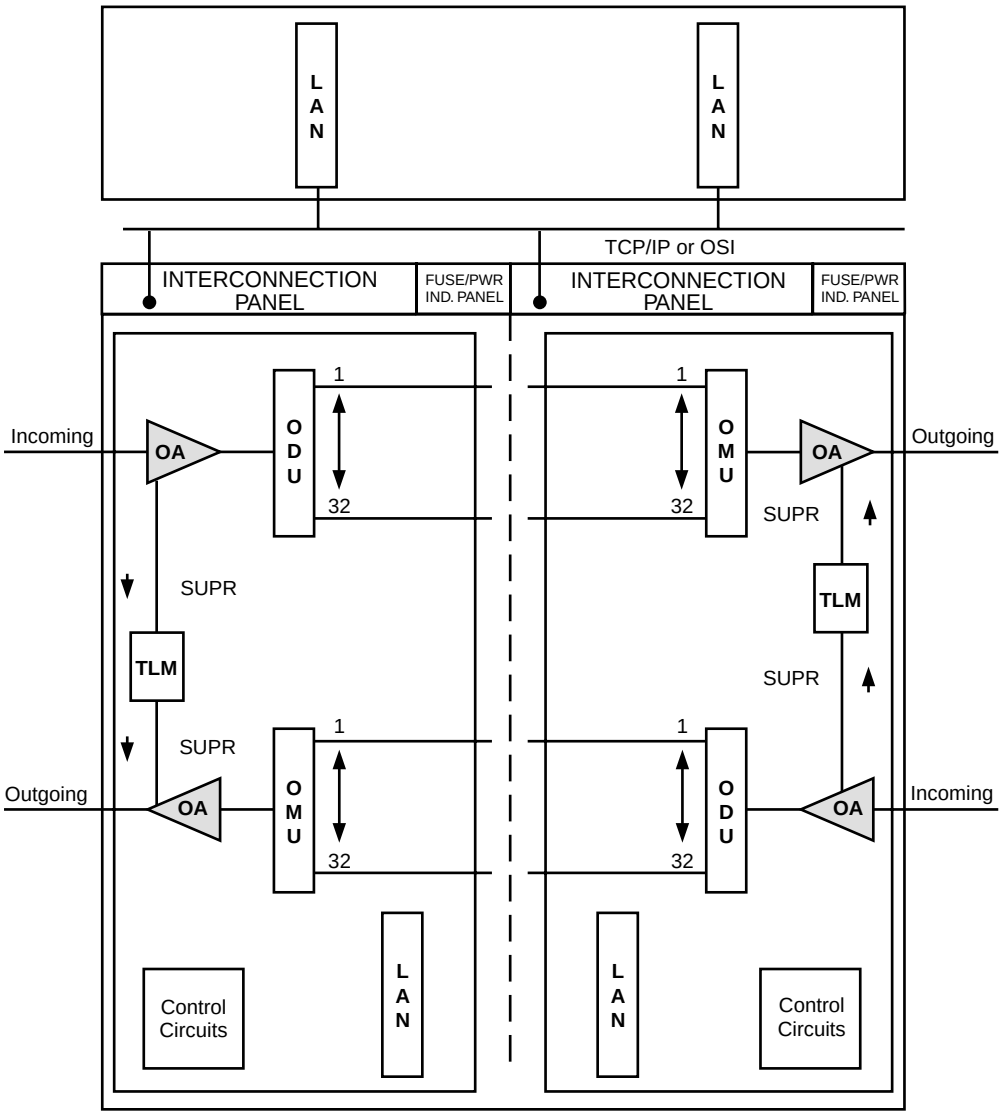

Finally, as shown in the following figure, DCC connectivity between two sides of a ring node may be established by installing TLM circuit packs into the 1B slots of the shelves and connecting them with fibers. This solution may be used whether the two shelves are collocated or not. This solution may not be used in OS monitoring nodes or nodes passing DCC to other rings.

Figure 3-21 DCC Connectivity via TLM Feed-Through

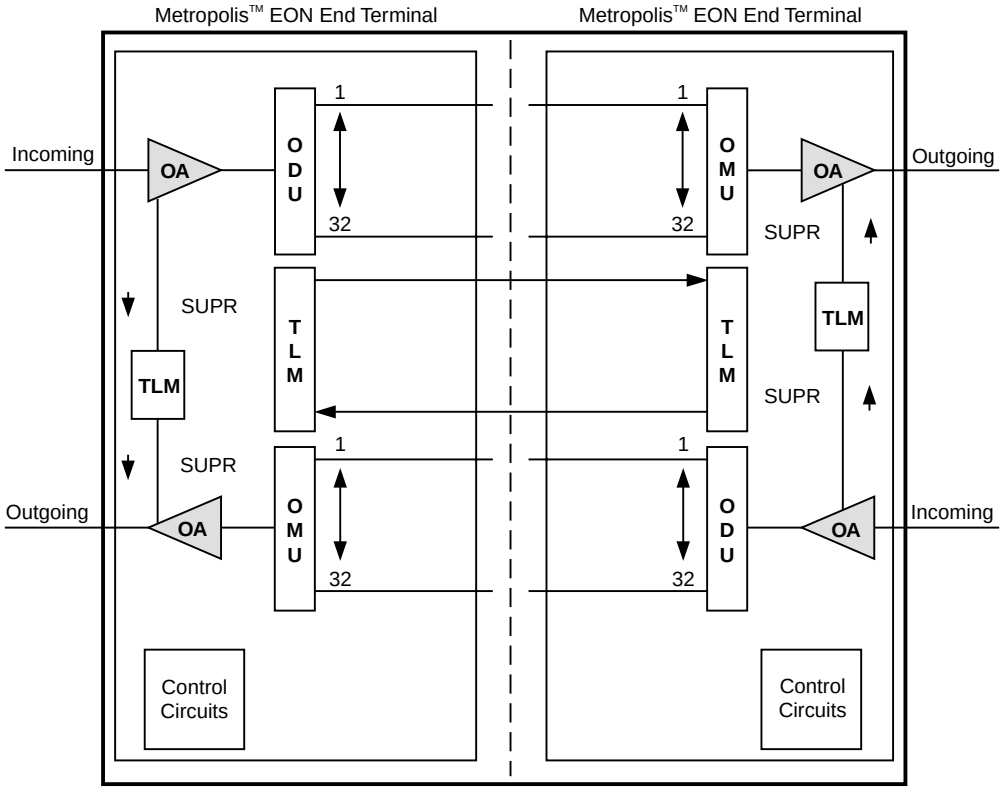

EON = Metropolis™ Enhanced Optical Networking (EON)

nc-metro-078

Managing Ring Traffic

Introduction

Metropolis® EON supports bandwidth management on rings by:

- allowing channels to be added/dropped at any node on a metropolitan ring without requiring OTUs for through-traffic
- providing optional per-channel protection at the optical layer
- providing access to 100% of the capacity at all ring terminals

Metropolis® EON supports hybrid traffic on a single fiber, including data traffic requiring optical protection, voice traffic protected externally as well as unprotected traffic. Figure 3-22, “Four-Node One-OA Ring”, Figure 3-23, “Voice Traffic in the Ring”, Figure 3-24, “Data Traffic in the Ring”, Figure 3-25, “Fiber Cut between Nodes A and B”, and Figure 3-26, “Fiber Cut between Nodes C and D” that follow, illustrate hybrid traffic.

Example

The following figure, a four-node ring with both voice and data traffic on a single fiber, serves as the starting point for the following discussion of ring traffic in this section.

Suppose, for example, that the ring shown in this figure is owned by a service provider who is leasing channels to a Bank to perform data backup and restore at a Data Center. In addition, the service provider is transporting voice traffic on the ring. The service provider has central offices at Nodes A and B. The Bank is located at Node D. The Data Center is located at Node C.

Figure 3-22 Four-Node One-OA Ring

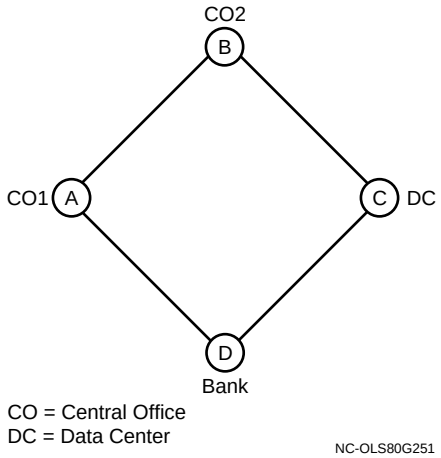

The following figure shows the voice traffic in the ring.

Figure 3-23 Voice Traffic in the Ring

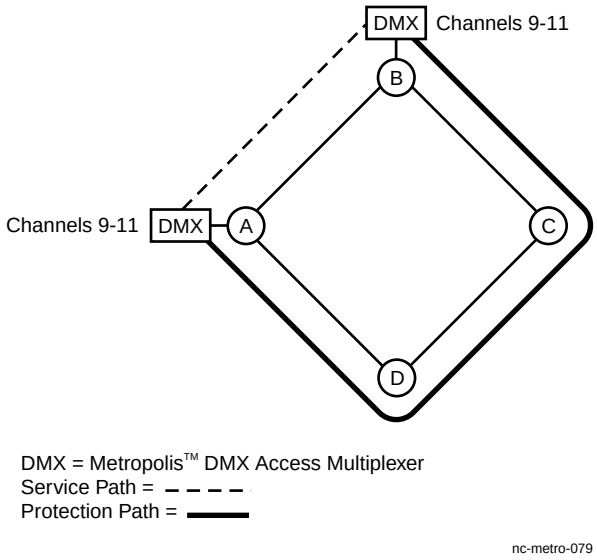

Node A to Node B is the service path for voice traffic (channel 9 - 11) being added/dropped at Nodes A and B. The protection path for the voice traffic is B to C to D to A. Although the protection traffic traverses the Data Center and the Bank, no OTUs are required for the pass-through traffic at these sites. Protection is provided by Metropolis® DMX.

The following figure illustrates the data traffic in the ring.

Figure 3-24 Data Traffic in the Ring

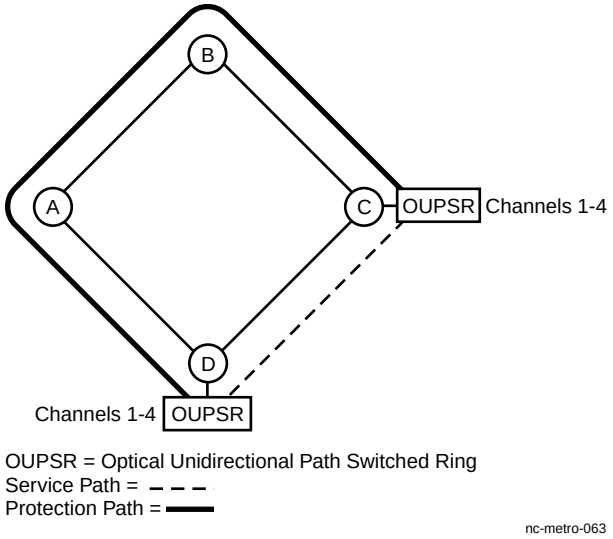

Node C to Node D is the service path for 4 channels of data traffic (channels 1 - 4) being added/dropped at Nodes C and D. The protection path for the data traffic is D to A to B to C. Although the protection traffic traverses the two Central Offices, no OTUs are required for the pass-through traffic at these sites. Protection is provided by Metropolis® EON using the OUPSR circuit pack.

The following figure depicts a fiber cut between Nodes A and B.

Figure 3-25 Fiber Cut between Nodes A and B

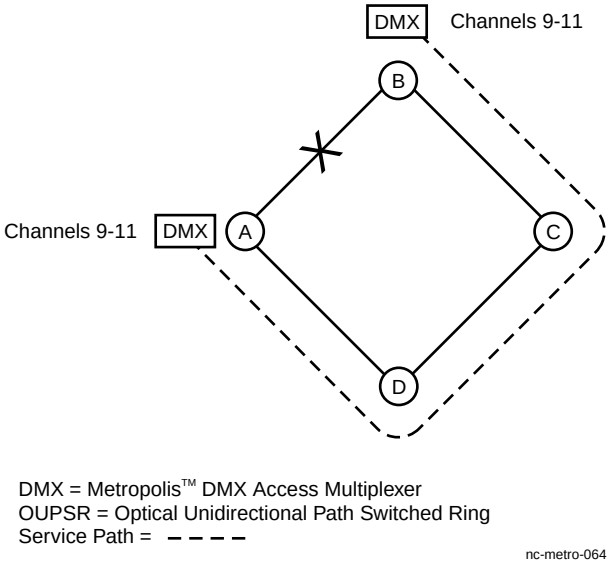

As a result of the fiber cut, Metropolis® DMX switches the voice traffic (channels 9 - 11) to the protection path A-D-C-B. The data traffic is unaffected. When the problem is fixed, traffic could be rolled back to the service path A-B.

The following figure depicts a fiber cut between Nodes C and D.

Figure 3-26 Fiber Cut between Nodes C and D

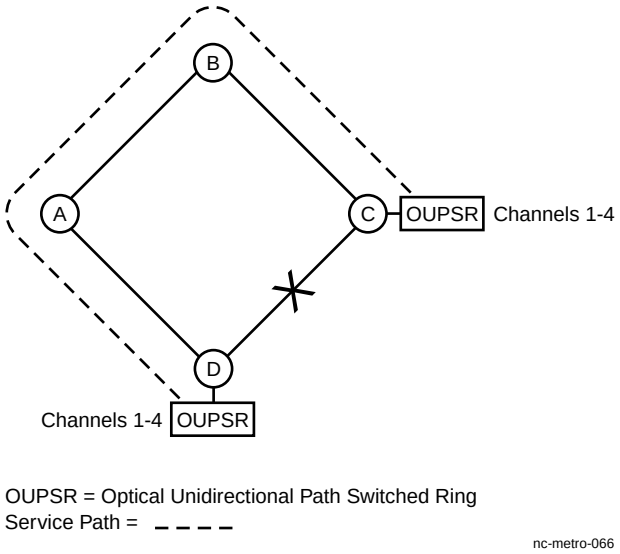

As a result of the fiber cut, Metropolis® EON switches the data traffic (channels 1 - 4) to the protection path D-A-B-C. The voice traffic is unaffected. When the problem is fixed, traffic is rolled back to the service path D-C.

Managing Changes in Traffic Patterns

Metropolis® EON provides access to 100% of the capacity at every ring node. Ring terminals used in Metropolis® EON applications do not band channels in groups, and do not limit add/drop to channels in a band. This limit is important when traffic patterns in a ring change.

For example, the bank (shown in Figure 3-22, “Four-Node One-OA Ring”) might want to terminate an additional data channel on its premises. The service provider assigns a channel to the bank simply by connecting OTUs to both ends of the line and by connecting the OTUs to terminating equipment. No rolling of traffic or network re-engineering is required because all the capacity on the OA is available for add/drop at every node, as long as the channel is not already transporting signals.

As a result of this addition, channels 1 -5 would be terminating in nodes C and D and passing through nodes A and B, as shown in the following figure.

Figure 3-27 Channel 5 Added to Bank/Data Center Traffic

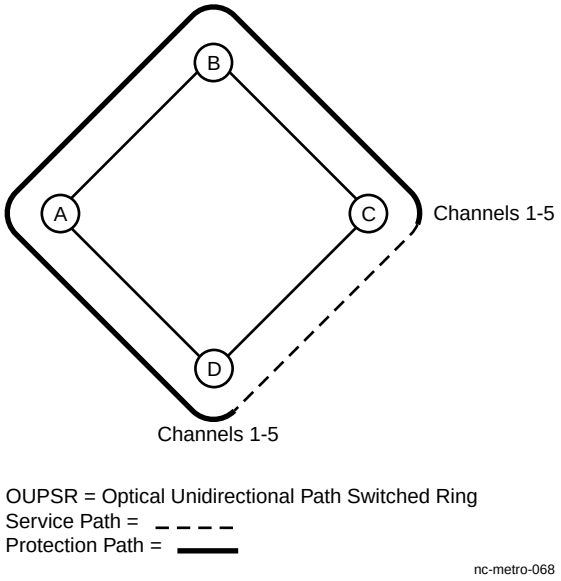

The Bank might decide that 5 data channels are too many and might stop leasing channel 5. In addition, the Data Center might pick up a data channel from a financial institution through Central Office A. The service provider could disconnect the OTUs on channel 5 at the Bank and jumper from ODU to OMU, creating a pass through at the Bank for channel 5.

As depicted in the following figure, the service provider could then connect OTUs to the ends of Channel 5 at the Data Center and Central Office A.

Figure 3-28 Channel 5 Moved from Bank to Central Office A Traffic

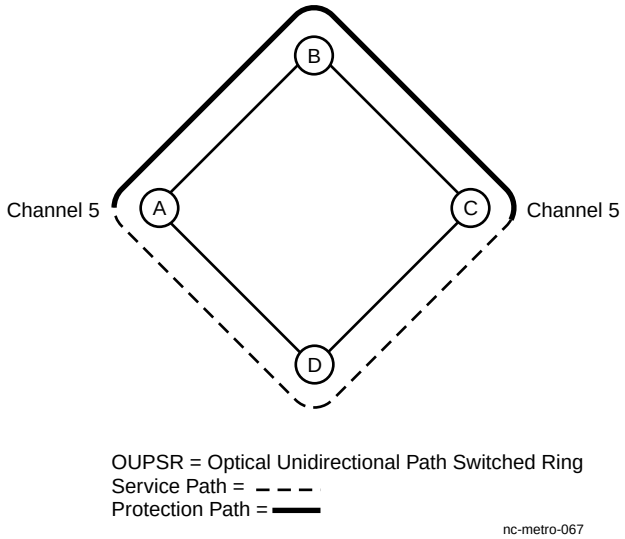

This change would require no network engineering and no traffic rolls. The data center, instead of the bank, would now have access to channel 5 without having affected any other traffic in the ring.

As shown in the next figure, Channels 1 - 4 will continue to carry the Bank traffic unaffected by the move of Channel 5 from the Bank to the Central Office.

Figure 3-29 Channels 1 -4 Unaffected by Move of Channel 5 from Bank to Central Office

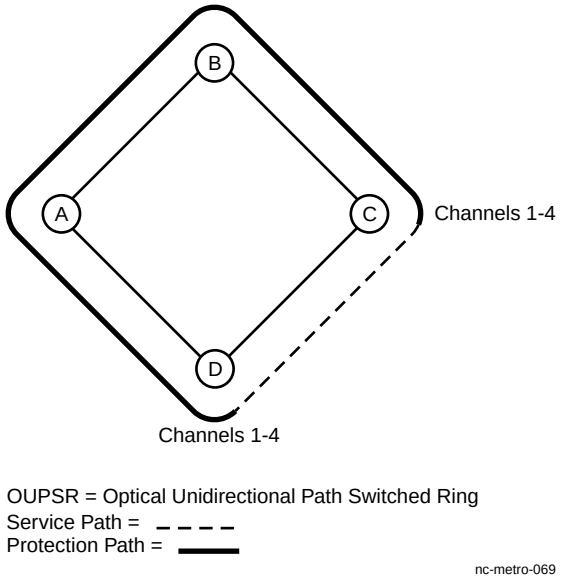

4 Product Description

Overview

Purpose

This chapter provides a detailed functional description of the Metropolis® EON circuit packs, equipment units, and modules.

This chapter describes shelf design, package descriptions, and configuration information for the Metropolis® EON. It also includes package illustrations and information on equipment packages, system control, physical design, transmission, protection, and powering.

Contents

The following sections are included in this chapter:

Metropolis® EON Equipment Packages	4-3
Metropolis® EON Architecture	4-14
Metropolis® EON Shelf Descriptions	4-16
Circuit Pack/Unit/Modules and Software Compatibility	4-22
Circuit Packs	4-24
Control Circuit Packs	4-26
Transmission Circuit Packs	4-44
Interconnection Panels	4-93
Power	4-102

Equipment Interconnection Guidelines	4-107

Metropolis® EON Equipment Packages

Introduction

This section provides a detailed description of the Release 8.0 equipment packages. For a detailed description of pre-release 8.0 packages, please refer to a pre-release 8.0 Applications, Planning and Ordering Guide.

The 32-channel optical amplifier (OA2) and the half-size 2.5G Optical Translator Unit (OTU) introduced in Metropolis® EON Release 8.0 require forced air cooling (fans) for proper heat dissipation. As a result, a new set of shelves were introduced with fans attached at the bottom and heat baffles attached at the top of the shelf. The heat baffle is not needed when the Metropolis® EON shelf is mounted at the top of the integrated bay (see Figure 4-2 and Figure 4-3).

The Release 8.0 Metropolis® EON shelf is required when using a 32-channel optical amplifier. A Release 8.0 OT shelf is required for the 2.5G QOTU. For proper heat dissipation the Metropolis® EON shelf must be installed above the OT shelves.

To ensure forced air flow control it is required that two full-size OTU apparatus blanks be used in each unused OA slot position of the Metropolis® EON shelf. These blanks will not completely fill the OA slots but will provide sufficient air flow containment. In addition, any unused OTU/OTPM slots must be filled with an apparatus blank. See Chapter 7 for ordering apparatus blank fillers. For additional information refer to the *Metropolis®* Enhanced Optical Networking (EON), *Installation Guide*.

Release 8.0 and Pre-Release 8.0 Ordering Equipment Packages

The available ordering packages for Release 8.0 systems and pre-release 8.0 systems are:

- **Release 8.0 Integrated Bay (single):** can be deployed as a ring terminal in a dual-facing shelf configuration or as an end terminal. The Metropolis® EON shelf in this configuration does not have an attached heat baffle.
- **Release 8.0 Integrated Bay (double):** can be deployed as a ring terminal. This double-bay kit also contains the LAN cables required for DCC connectivity between the two bays. The Metropolis® EON shelf in this configuration does not have an attached heat baffle.

- **Release 8.0 Miscellaneously Mounted shelf kit (single):** can be deployed as a ring terminal in a dual-facing shelf configuration or as an end terminal.

  This configuration contains 1 each of Release 8.0 miscellaneously mounted Metropolis® EON shelf, OT System Controller shelf and OT Complementary shelf 1. In addition, the kit contains the power cables and intra-shelf LAN cables for the three-shelf configuration depicted in Figure 4-2, “Release 8.0 Integrated Bay (Single)”, as well as fan, power, and alarm cables. The Metropolis® EON shelf does not have an attached heat baffle.
- **Release 8.0 Miscellaneously Mounted shelf kit (double):** can be deployed as a ring terminal. This configuration contains 2 each of Release 8.0 miscellaneously mounted Metropolis® EON shelf, OT System Controller shelf and OT Complementary shelf 1. In addition, the kit contains the power cables, intra-shelf LAN cables and LAN cables for the 2-bay configuration depicted in Figure 4-3, “Release 8.0 Integrated Bay (double)” as well as the fan, power, and alarm cables. The Metropolis® EON shelf in this configuration does not have an attached heat baffle.
- **Release 8.0 Miscellaneously Mounted Metropolis® EON shelf:** can be deployed as a repeater. This package contains one Release 8.0 Metropolis® EON shelf (including fan and heat baffle) and the power cables required for this shelf.
- **Release 8.0 Miscellaneously Mounted OT system controller shelf:** This package contains 1 Release 8.0 OT system controller shelf (including fan and heat baffle). Also included in this package are the fan power and fan alarm cables as well as the shelf power cables.
- **Release 8.0 Miscellaneously Mounted OT complementary 1 shelf:** This package contains 1 Release 8.0 OT complementary shelf 1 (including fan and heat baffle). Also included in this package are the fan power and fan alarm cables as well as the shelf power cables.
- **Release 8.0 Miscellaneously Mounted OT complementary 2 shelf:** This package contains 1 Release 8.0 OT complementary shelf 2 (including fan and heat baffle). Also included in this package are the fan power and fan alarm cables as well as the shelf power cables.

- **Pre-Release 8.0 Integrated Bay (single):** can be deployed as a ring terminal in a dual-facing shelf configuration or as an end terminal.
- **Pre-Release 8.0 Miscellaneously Mounted Metropolis® EON shelf:** can be deployed as a repeater or as part of a ring terminal in a dual-facing shelf configuration or as part of an end terminal. This package contains 1 pre-release 8.0 Metropolis® EON shelf and the power cables required for this shelf.
- **Pre-Release 8.0 Miscellaneously Mounted OT system controller shelf:** This package contains 1 pre-release 8.0 OT system controller, including the shelf power cables.
- **Pre-Release 8.0 Miscellaneously Mounted OT complementary 1 shelf:** This package contains 1 pre-release 8.0 OT complementary shelf 1, including the shelf power cables.
- **Pre-Release 8.0 Miscellaneously Mounted OT complementary 2 shelf:** This package contains 1 pre-release 8.0 OT complementary shelf 2, including the shelf power cables.

Metropolis® EON Bay

The Metropolis® EON supports a miscellaneous mount design and a pre-mounted design. Equipment deployed outside North America utilizes European Telecommunications Standards Institute (ETSI) racks of various sizes and the miscellaneous mount design. Shelves are mounted into the ETSI rack in the field. Equipment deployed in North America may use either the miscellaneous mount design or the pre-mounted design. The North American Network Seismic bay frame is depicted in the following figure.

Figure 4-1 Metropolis® EON Network Seismic Bay Frame

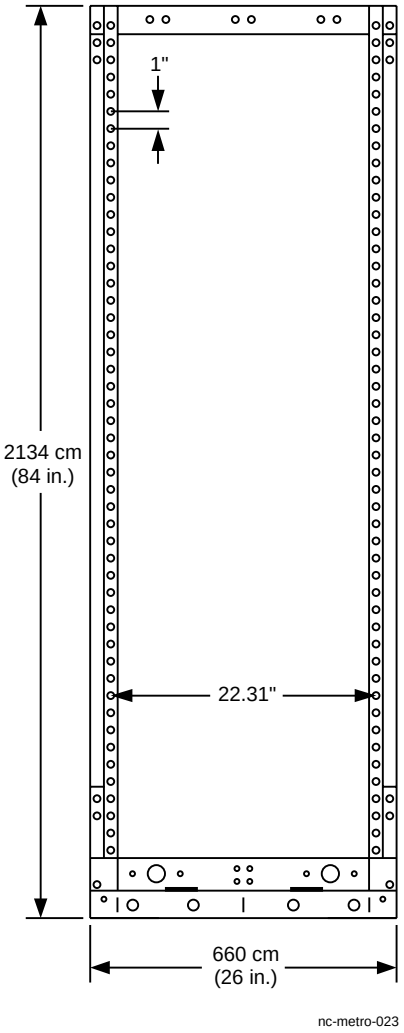

Release 8.0 Integrated Bay (single)

The Release 8.0 integrated bay (single) consists of a North American Network Seismic Bay frame with three pre-mounted shelves. The bottom shelf is an OT complementary 1 shelf, the middle shelf is the OT System Controller shelf and the top shelf is the Metropolis® EON shelf. There is a fan beneath each of the three shelves. There is a heat baffle above each of the two OT shelves.

The following figure depicts a 2-OA end terminal, defined by the OAs in slots 1A and 1B and the empty slots 2A and 2B. This bay may also be deployed as a ring terminal if the Metropolis® EON shelf is configured as a dual-facing shelf by engaging slots 2A and 2B next to slots 1A and 1B in the Metropolis® EON shelf. The ring terminal in the dual-facing shelf configuration will be limited to add/drop of 16 channels.

For customer using ETSI racks, the Release 8.0 Miscellaneously Mounted shelf kit (single) contains the equipment (including cables) depicted in the following figure, except for the bay.

Figure 4-2 Release 8.0 Integrated Bay (Single)

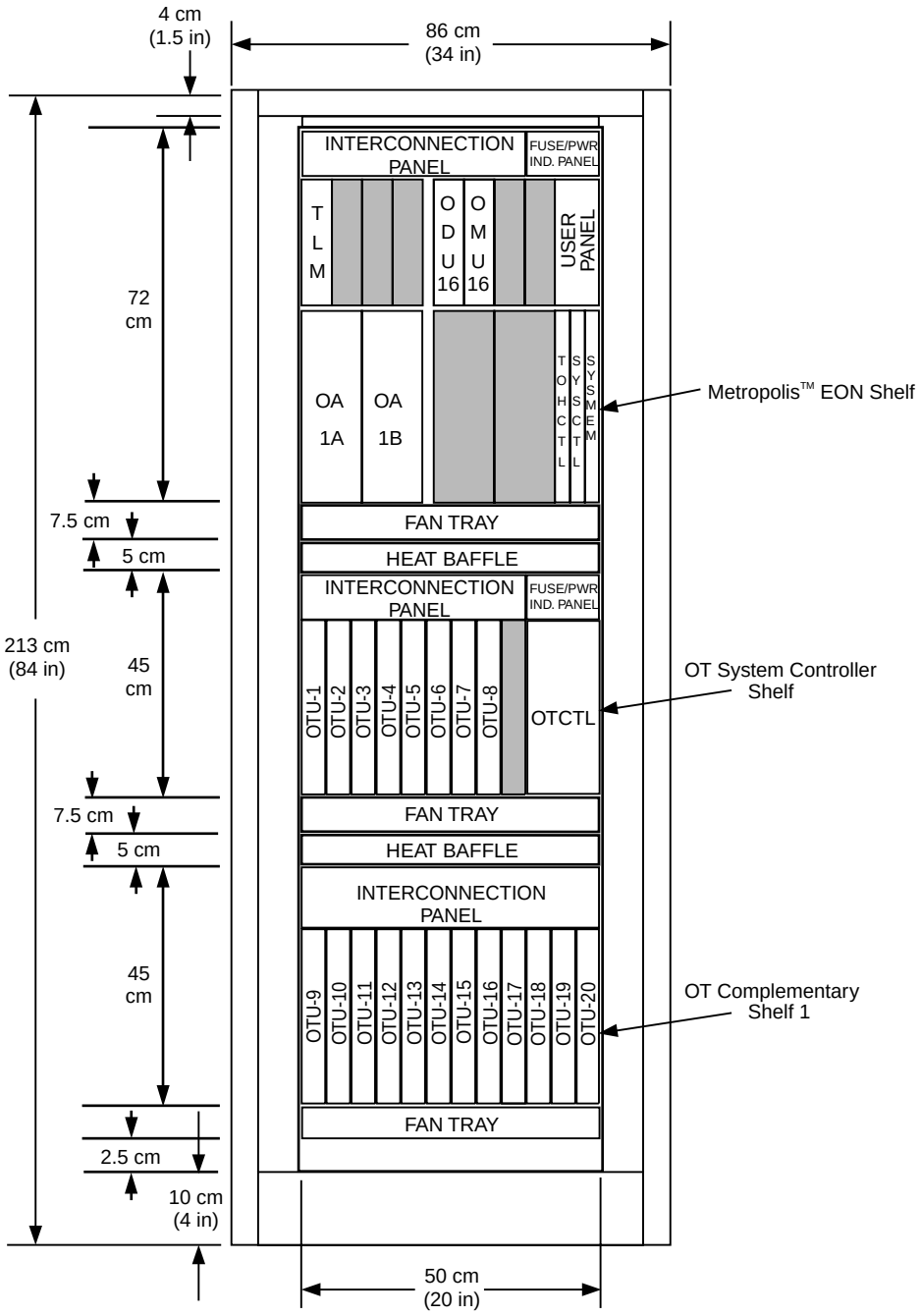

EON = Metropolis™ Enhanced Optical Networking (EON)

nc-metro-080

Release 8.0 Integrated Bay (double)

The Release 8.0 integrated bay (double) consists of 2 North American Network Seismic Bay frames each with three pre-mounted shelves (OT complementary1 shelf on the bottom, OT system controller shelf in the middle and Metropolis® EON shelf on top). There is a fan beneath each of the shelves and a heat baffle above each of the two OT shelves.

For customers using ETSI racks, the Release 8.0 Miscellaneously Mounted shelf kit (double) contains the equipment (including cables) depicted in the following figure, except for the bay. The shelves must be installed as described in the following figure of a double integrated bay.

Figure 4-3 Release 8.0 Integrated Bay (Double)

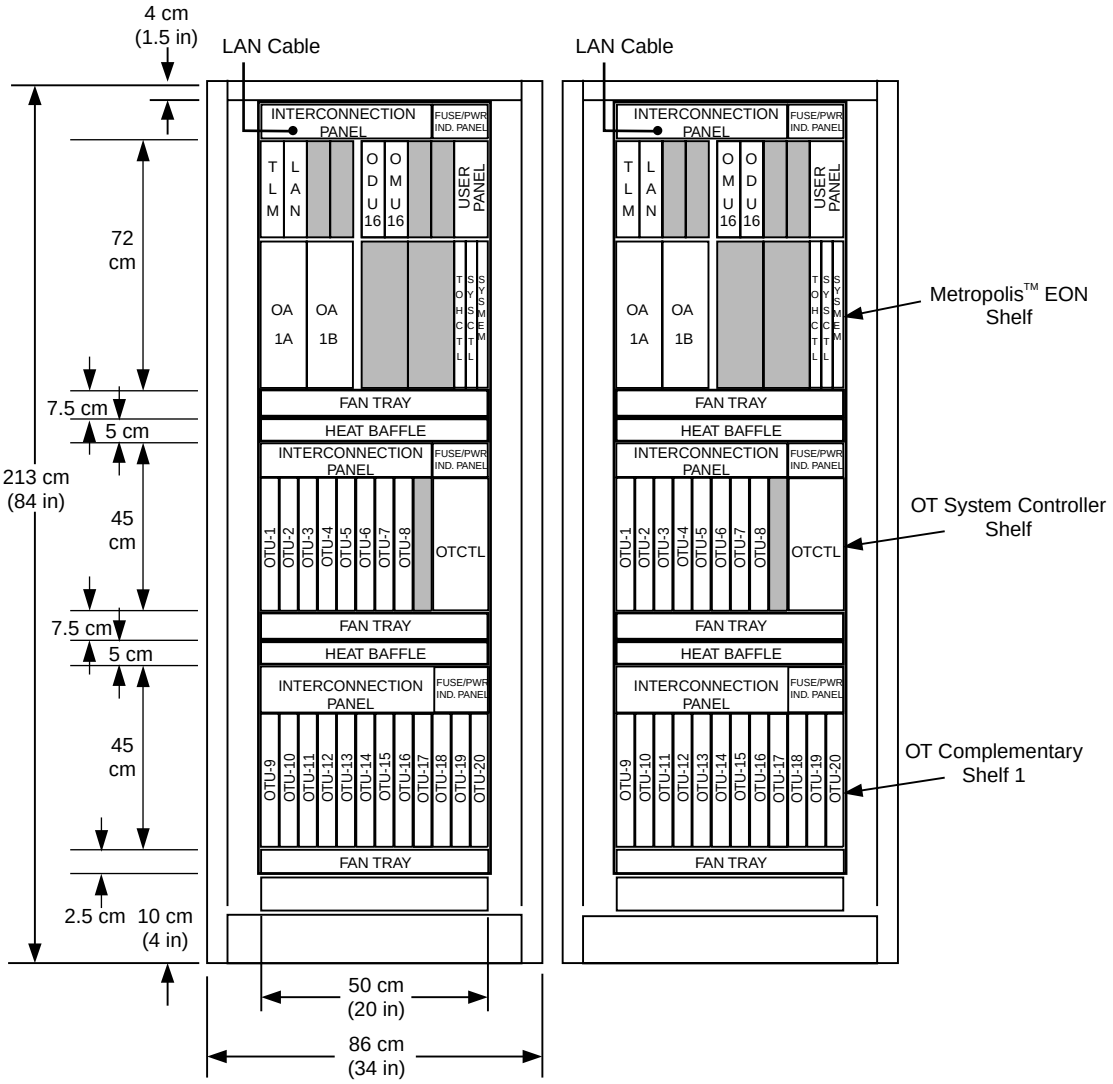

EON = Metropolis™ Enhanced Optical Networking (EON)

Capacity for Growth Bays

The ring terminal packages described in the previous paragraphs support 40 full-sized and 80 half-sized slots for growth. These slots may be filled with any mix of full-sized OTUs, OUPSR circuit packs, and half-sized OTPM25, OTPM UBB, and OTPM DUBB circuit packs. Additional shelves may be required to house a full complement of 64 add OTUs and 64 drop OTUs, as well as 32 OUPSR circuit packs in a fully-loaded ring terminal of a two-node ring with all optically protected channels.

This physical capacity is available because each Metropolis® EON shelf supports up to two OT controller shelves and four complementary shelves. Two Metropolis® EON shelves in each ring terminal support a total of 128 full-sized slots and 256 half-sized slots. This is enough capacity to house 32 full-sized OUPSR circuit packs, 32 full-sized add OTUs, 32 full-sized drop OTUs, 32 half-sized add OTPM25s or OTPM UBBs, and 32 half-sized drop OTPM25s or OTPM DUBBs. This capacity would support a fully-loaded ring terminal of a two-node ring with all optically protected channels.

Release 8.0 Miscellaneously Mounted Metropolis® EON Shelf

The Release 8.0 miscellaneously mounted Metropolis® EON shelf (single) is shipped with two front shelf covers, an attached heat baffle, a user panel, bay mounting brackets, power cables and a fan tray (see the following figure). This shelf may be deployed as an end terminal or, if configured with OAs in slots 2A and 2B, as a ring terminal. It may also be deployed as a repeater.

Figure 4-4 Release 8.0 Miscellaneously Mounted Metropolis® EON Shelf with Front Covers

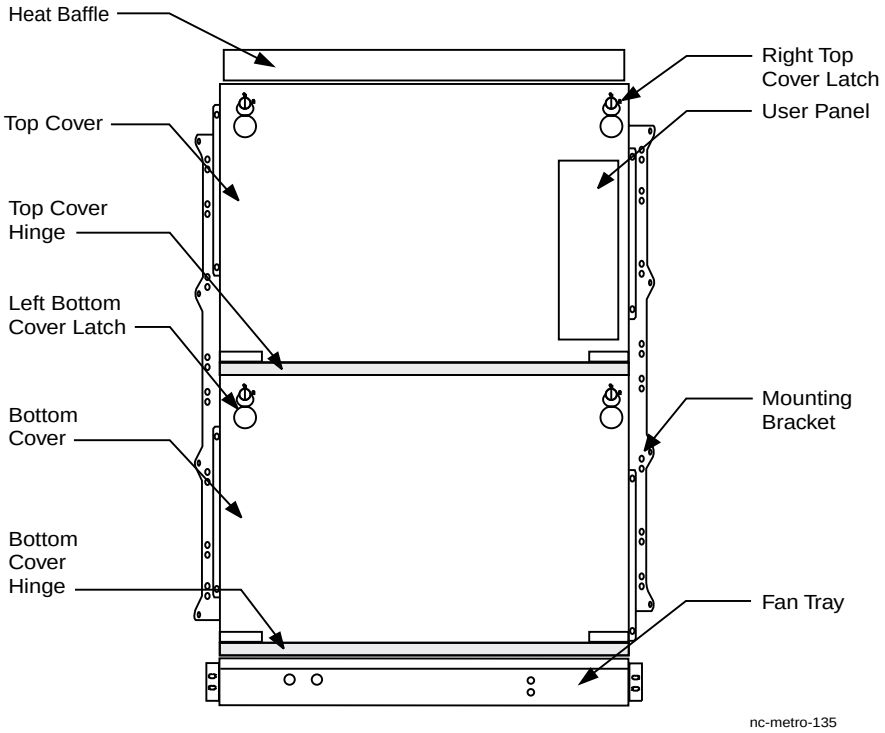

Release 8.0 Miscellaneously Mounted OT Growth Shelf

The miscellaneously mounted OT growth shelf is depicted in the following figure. (Bay-mounted shelves are similar.)

Figure 4-5 Miscellaneously-mounted R8.0 OT Shelf with Front Cover

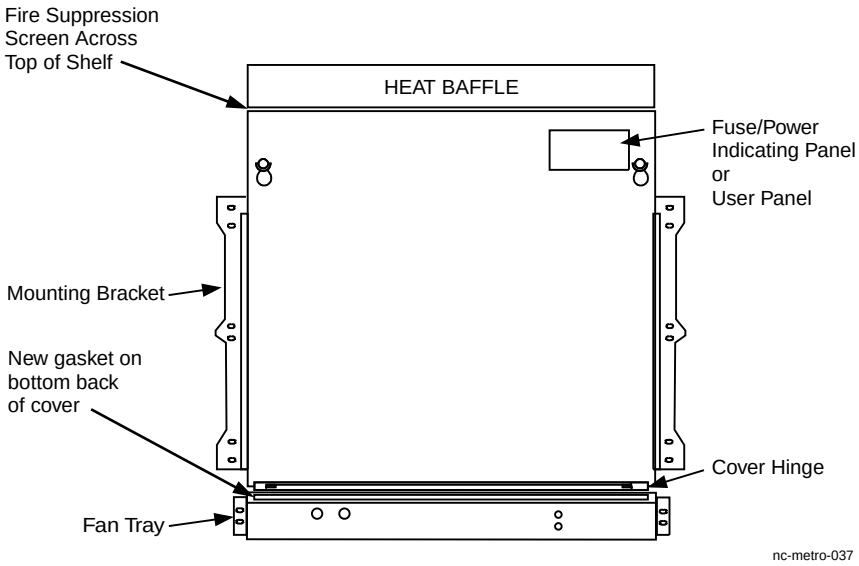

Introduction

Metropolis® EON uses a hierarchical control architecture. The control system hierarchy consists of three levels, the system controller complex, the OT controller, and the board controller. The system controller complex functions as the higher level of control and the board controller, residing on the OA and telemetry (TLM) and OTU/OTPM circuit packs, serve as the lowest level of control. The following figure shows Metropolis® EON system control architecture.

Figure 4-6 System Control Architecture for Metropolis® EON

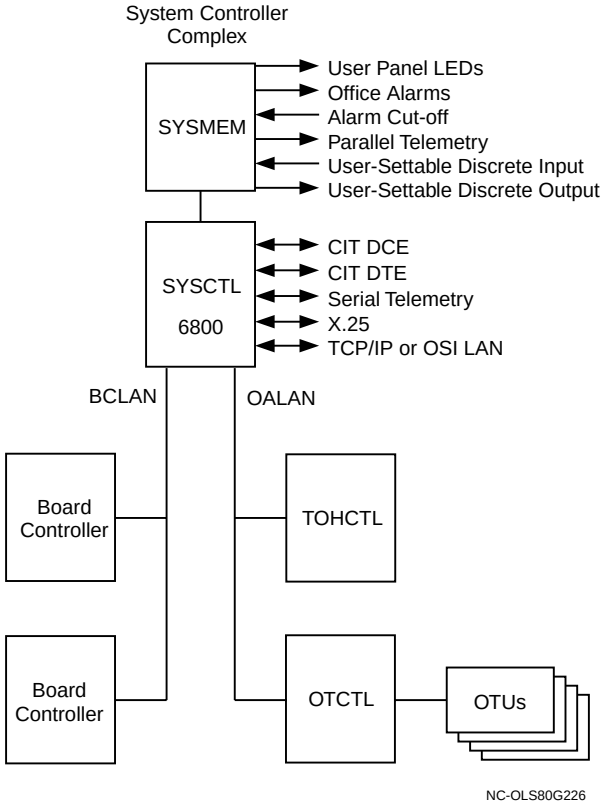

The OT controller serves as the interface between the system controller and board controllers on the OTUs/OTPMs.

The system controller complex is responsible for system-wide computations and system user interface functions. The complex is physically partitioned into two separate circuit packs, referred to as the system controller (SYSCTL) and system memory (SYSMEM) circuit packs, respectively. The board controller local area network (BCLAN) connects these two control circuit packs. The system controller complex also plays a major role in providing the operations, administration, maintenance, and provisioning functions. A single system controller complex controls up to four bidirectional optical lines.

The board controller contains a micro-controller with supporting circuitry. This controller monitors and controls the OA and TLM circuit packs, isolates faults at the circuit pack level, controls the FAULT LEDs, controls hardware provisioning data, maintains a sanity timer, and provides debugging functions. The tributary overhead controller (TOHCTL) performs data communications channel (DCC) processing functions.

The controllers communicate among the various levels of the system using internal local area networks (LANs). The board controllers communicate using the board controller local area network (BCLAN). The TOHCTL circuit pack and the system controller complex communicate using the overhead access local area network (OALAN).

Metropolis® EON control features are available to the operator through several craft and operations system (OS) interfaces. In addition to accessing the local terminal, the craft and OS interfaces can reach a remote terminal using the DCC in the optical signal. These functions are provided by the SYSCTL, SYSMEM, and TOHCTL circuit packs.

□

Metropolis® EON Shelf Descriptions

Introduction

This section describes the basic Metropolis® EON shelf equipage with circuit packs. For more details regarding the various available configurations and their associated circuit pack equipage refer to the *Metropolis®* Enhanced Optical Networking (EON) *Installation Guide*.

End Terminal and Ring Terminals

In Metropolis® EON End Terminals, the Metropolis® EON shelf is equipped with the Optical Multiplexer Units (OMU/OMU16/OMU32) and Optical Demultiplexer Units (ODU/ODU16/ODU32) which are placed in various configurations to produce different shelf configurations, all of which are provisionable by network element software.

Figure 4-7, “Metropolis® EON End Terminal Shelf ” and Figure 4-8, “Metropolis® EON Ring Terminal Shelves with LAN Connection” depict OA3 amplifiers. OA2 amplifiers may be installed instead. For short distances, LITX and LIRCV circuit packs may be substituted.

The Metropolis® EON shelf used as a Ring terminal or End Terminal contains telemetry (TLM) circuit packs, OAs, OMUs, and ODUs that provide Dense Wavelength Division Multiplexing (DWDM) of up to 32 wavelengths per fiber, and system control circuit packs, TOHCTL, SYSCTL, SYSMEM, and IAOLRP (LAN), as shown in Figure 4-7 and Figure 4-8. In addition, OMU32/ODU32 provide 32-channel capability. (The LIHTR circuit pack is required with the OMU32 and ODU32.)

The shelf in the following figure is equipped with an IAOLRP (LAN) circuit pack, which allows the shelf to operate over the IAOLAN interface for connectivity to the OS or for DCC extension. This circuit pack, as shown, is installed in the TLM slot 1B, which would otherwise remain empty.

Figure 4-7 Metropolis® EON End Terminal Shelf

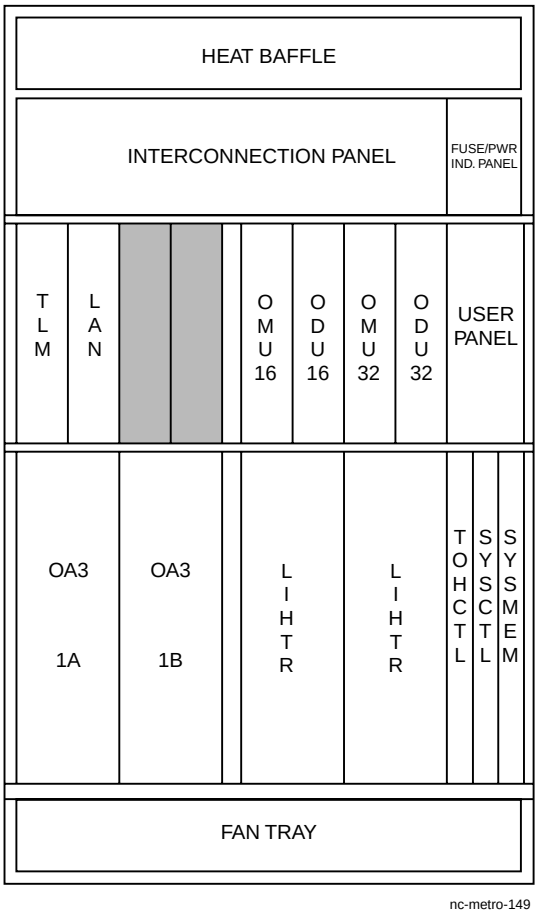

For information on circuit packs, refer to "Overview of Metropolis® EON Circuit Packs" later in this chapter. See Chapter 6 for provisioning information and shelf illustrations.

Figure 4-8 Metropolis® EON Ring Terminal Shelves with LAN Connection

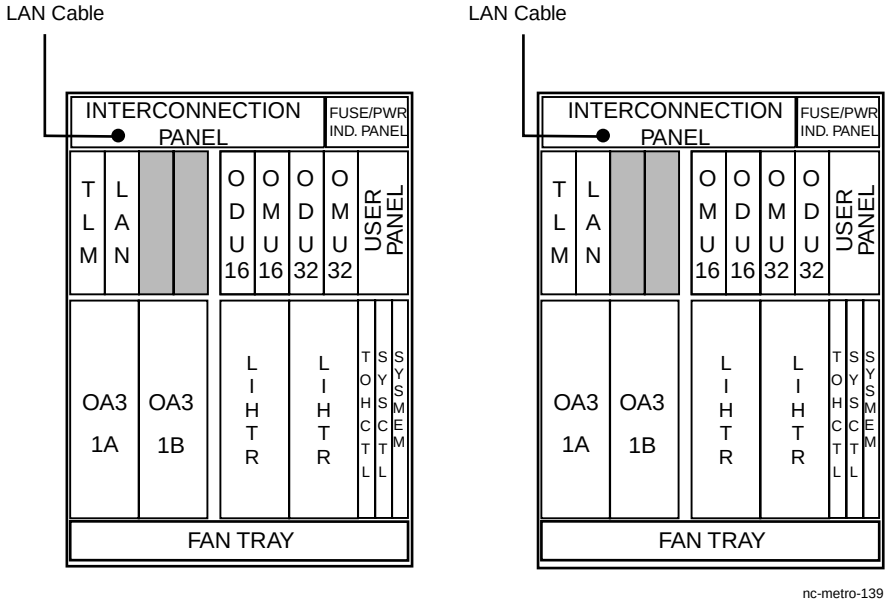

Metropolis® EON Repeater Shelf

The Metropolis® EON shelf may also be used as a repeater as shown in the following figure. When used as a repeater, the Metropolis® EON shelf does not contain an OMU or ODU and requires two TLM circuit packs per line. The Repeater shelf contains OA circuit packs, associated system control and telemetry circuit packs, a fuse panel, an interconnection panel, heat baffle, and a fan.

Figure 4-9 Metropolis® EON Repeater Shelf (fully equipped)

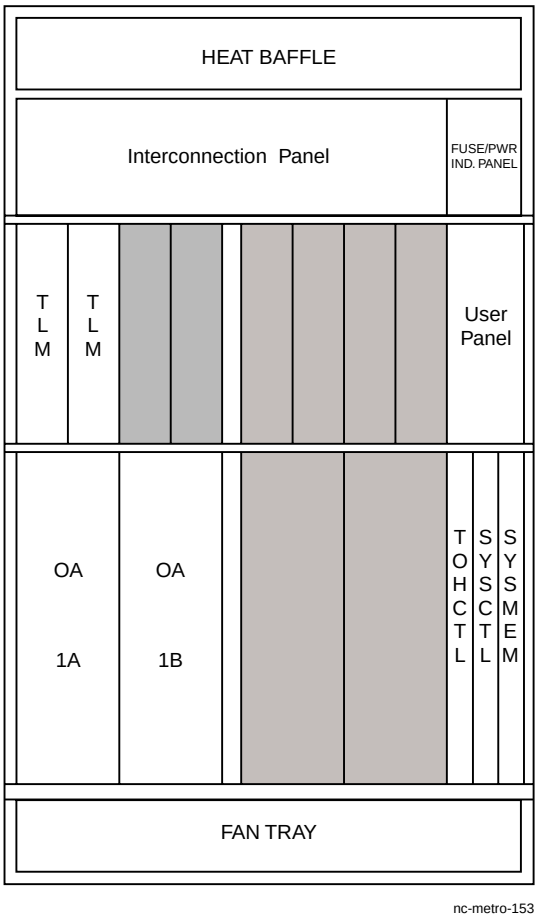

OT System Controller Shelf

To accommodate OT integration, the OT Controller (OTCTL) circuit pack is included in the OT System Controller Shelf. This shelf is controlled by the System Controller (SYSCTL) and System Memory (SYSMEM) circuit packs. One SYSCTL may control up to two OTCTL circuit packs; one OTCTL controls up to three OT shelves.

In addition to the OTCTL, each miscellaneously-mounted OT System Controller Shelf consists of eight OTU or four QOTU circuit pack slots (one QOTU uses two slots) and one empty slot.

The following figure shows a miscellaneously-mounted OT System Controller Shelf without the front shelf cover.

Figure 4-10 Miscellaneously-mounted OT System Controller Shelf (8 OTUs; fully equipped)

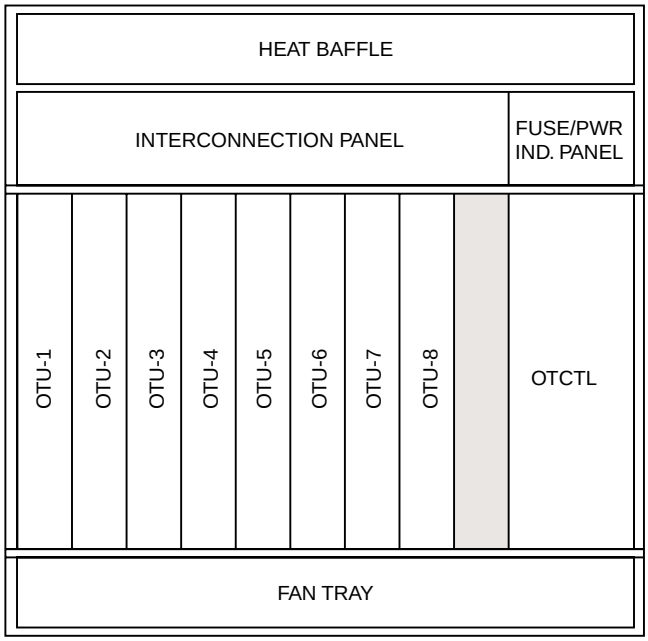

nc-metro-137

DCM Carrier Shelf

Release 8.2 introduces dispersion compensation modules (DCMs) which reside in a miscellaneously mounted carrier shelf of their own.

The following two figures show respectively, an individual DCM module and the miscellaneously mounted DCM carrier shelf into which the DCM module is inserted. Four individual DCM modules can be inserted into each DCM carrier shelf.

Figure 4-11 DCM Module

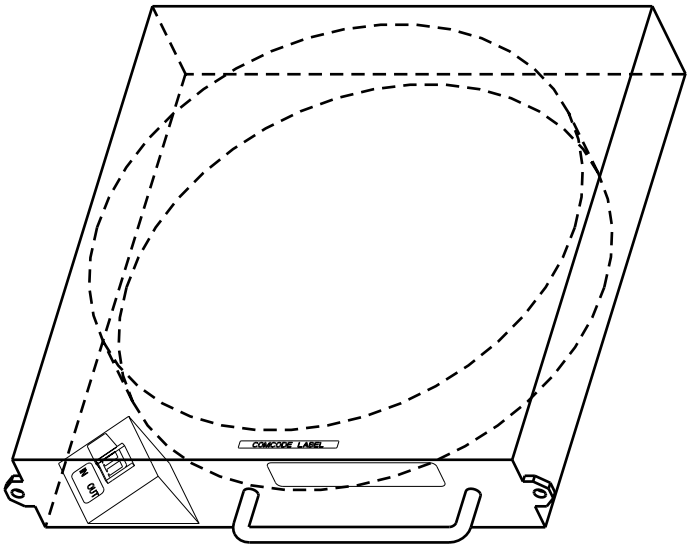

nc-metro-175

Figure 4-12 Miscellaneously-Mounted DCM Carrier Shelf

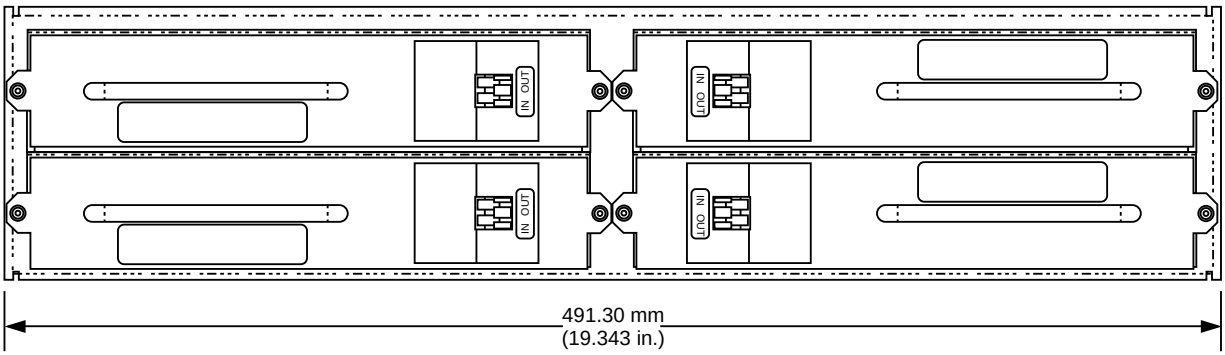

nc-metro-150

Circuit Pack/Unit/Modules and Software Compatibility

Refer to the following table for information about circuit packs/units/ modules and compatible software.

Table 4-1 Circuit Packs/Units/Modules and Compatible Software

Circuit Pack/Unit/Module		***Compatible* Metropolis® EON *Software***											
Code	***Name***	**R3.0**	**R3.1**	**R3.3**	**R3.4**	**R4.0.x**	**R5.0.x**	**R6.0.x**	**R7.0.x**	**R7.5**	**R8.0**	**R8.2**	**R8.2.1**
LDA1	TLM	X	X	X	X	X	X	X	X	X	X	X	X
LDA4	TLM					X	X	X		X	X	X	X
LDA3	IAOLRP					X	X	X		X	X	X	X
LEA1	SYSCTL	X	X	X	X	X	X	X	X	X	X	X	X
LEA2	SYSMEM	X	X	X	X	X	X	X	X	X	X	X	X
LEA5	TOHCTL	X	X	X	X				X				
LEA102	TOHCTL					X	X	X		X	X	X	X
LEA7	OA	X	X	X	X	X	X	X	X	X	X	X	X
LEA7B	OA			X	X	X	X	X	X	X	X	X	X
LEA104	OA	X	X	X	X	X	X	X	X	X	X	X	X
LEA105	OA	X	X	X	X	X	X	X	X	X	X	X	X
LEA107B	OA							X	X	X	X	X	X
LEA207	OA2										X	X	X
LEA307	OA3											X	X
LEA209	LIRCV										X	X	X
LEA210	LIHTR											X	X
LEA211	LITX										X	X	X
LEP1	OPS		X			X	X	X		X			
LEP2	OUPSR										X	X	X
LEP3	OUPSR											X	X
LUD1	OTCTL	X	X	X	X	X	X	X	X	X	X	X	X
506A	OMU	X	X	X	X	X	X	X	X	X	X	X	X
506B	OMU								X	X	X	X	X
507A	OMU16										X	X	X
507B	OMU16										X	X	X
508A	OMU32											X	X
508B	OMU32											X	X
606A	ODU	X	X	X	X	X	X	X	X	X	X	X	X
606B	ODU	X	X	X	X	X	X	X	X	X	X	X	X

Circuit Pack/Unit/Module		***Compatible* Metropolis® EON *Software***											
Code	***Name***	**R3.0**	**R3.1**	**R3.3**	**R3.4**	**R4.0.x**	**R5.0.x**	**R6.0.x**	**R7.0.x**	**R7.5**	**R8.0**	**R8.2**	**R8.2.1**
606C	ODU								X	X	X	X	X
606D	ODU								X	X	X	X	X
607A	ODU16										X	X	X
607B	ODU16										X	X	X
608A	ODU32											X	X
608B	ODU32											X	X
BSY1	SPODU		X			X	X	X		X			
BSY2	SPOMU		X			X	X	X		X			
41A1C - 41A16C	OTU 1.5	X	X	X	X	X	X	X	X	X	X	X	X
41BB	OTU 1.3	X	X	X	X	X	X	X	X	X	X	X	X
41C1C - 41C16C	OTU 1.5 DISP	X	X	X	X	X	X	X	X	X	X	X	X
41F1 - 41F16	OTU GbE-1 1.5			X	X	X		X	X	X	X	X	X
41G	OTU GbE-1 1.3			X	X	X		X	X	X	X	X	X
41H1A - 41H32A	10G OTU 1.5											X	X
41HB	10G OTU 1.3											X	X
41H1C - 41H32C	10G OTU 1.5											X	X
41S	QUAD OTU	X		X	X	X	X	X	X	X	X	X	X
41T	QUAD OTU25										X	X	X
41U	QOTUUB											X	X
42A1B - 42A16B	OTPM 1.5	X		X	X	X	X	X	X	X	X	X	X
42B	OTPM 1.3	X		X	X	X	X	X	X	X	X	X	X
43A1B - 43A16B	OTPM 1.5	X		X	X	X	X	X	X	X	X	X	X
43B	OTPM 1.3	X		X	X	X	X	X	X	X	X	X	X
44A1B - 44A16B	LSBB OTPM 1.5	X		X	X	X	X	X	X	X	X	X	X
44B	LSBB OTPM 1.3	X		X	X	X	X	X	X	X	X	X	X
44C1 - 44C16	ELSBB OTPM 1.5											X	X
44BC	ELSBB OTPM 1.3											X	X
46A1 - 46A32	OTPM25 1.5										X	X	X
46B	OTPM25 1.3										X	X	X
47A1 - 47A32	OTPM UBB 1.5											X	X
47B	OTPM DUBB 1.3											X	X
41M1-32	2DM25 Muxing OTU												X

Overview of Metropolis® EON Circuit Packs

Purpose

The Metropolis® EON circuit packs are divided into two main categories:

- control circuit packs
- transmission circuit packs Release 8.x and pre-release 8.x.

Contents for Control Circuit Packs

The control circuit packs are listed as follows in this section:

System Controller (SYSCTL) LEA1	4-26
System Memory (SYSMEM) LEA2	4-29
Overhead Controller - Tributary (TOHCTL) LEA102	4-33
Optical Translator Controller (OTCTL) LUD1	4-37
Telemetry Controller (TLM) LDA1 and LDA4	4-39
Intraoffice LAN Relay Pack (IAOLRP) LDA3	4-43

Contents for Transmission Circuit Packs

The transmission circuit packs/equipment units/modules are listed as follows in this section:

Optical Amplifier - (OA3) LEA307	4-46
Optical Amplifier - (OA2) LEA207	4-50
Optical Amplifier - (OAs) LEA7B and LEA107B	4-52
Line Interface Receive (LIRCV) LEA209	4-54
Line Interface Transmit (LITX) LEA211	4-56
Optical Multiplexing Units - (OMU32) 508A and 508B	4-58
Optical Multiplexing Units - (OMU16) 507A and 507B	4-60
Optical Multiplexing Units - (OMU) 506A	4-61

Optical Demultiplexing Units - (ODU32) 608A and 608B	4-62
Optical Demultiplexing Units - (ODU16) 607A and 607B	4-64
Optical Demultiplexing Units - (ODU) 606A and 606B	4-65
Line Interface Heater (LIHTR) LEA210	4-66
47A1 through 47A32, 16 Mb/s - 2.5 Gb/s Optical Translator Port Module Universal Broadband (add) - 1.5mm; 47B, 16 Mb/s - 2.5 Gb/s Optical Translator Port Module Universal Broadband (drop) - 1.3µm	4-68
41M1 through 41M32, 2.5G (2DM25) Muxing OTU (FICON, Fiber Channel, GbE, and ISC-2 inputs) and its small form factor plug-in (SFP) modules	4-72
44C1 through 44C32, 16 Mb/s - 1.06 Gb/s Enhanced Low Speed Broadband Optical Translator Port Module - 1.5µm (OFC supported);44BC, 16 Mb/s - 1.06 Gb/s Enhanced Low Speed Broadband Optical Translator Port Module - 1.3µm (OFC supported)	4-75
41H1A through 41H32A, 10G (OC-192/STM-64) Optical Translator Unit (add)- 1.5µm (optimized for receiver sensitivity); 41HB, 10G (OC-192/STM-64) Optical Translator Unit (drop) - 1.3mm;41H1C through 41H32C, 10G (OC-192/STM-64) Optical Translator Unit (through) - 1.5µm (optimized for receiver SNR)	4-78
46A1 through 46A32, OC-48/STM-16 Optical Translator Port Module - 1.5mm; 46B, OC-48/STM-16 Optical Translator Port Module - 1.3µm	4-81
Single-mode (LEP2) and multi-mode (LEP3) Optical Unidirectional Path-Switched Ring (OUPSR)	4-83
41U Quad Optical Translator Unit (QOTU) Universal Broadband (UBB) Carrier - (QOTUUB)	4-87
41T Quad Optical Translator Unit 25 (QUAD OTU25) Carrier	4-89
Pre-release 8.0 OTUs/OTPMs	4-90
41S Quad Optical Translator Unit (QUAD OTU) Carrier	4-92

Control Circuit Packs

Introduction

Control circuit packs used in Metropolis® EON are as follows:

- System controller (SYSCTL)
- System memory (SYSMEM)
- Tributary overhead controller (TOHCTL)
- OT controller (OTCTL– used in the OT)
- Telemetry (TLM) Circuit Pack
- Intra-Office LAN Relay Pack (IAOLRP)

The circuit packs are common between the 16- and 32-channel systems.

System Controller (SYSCTL)

The SYSCTL circuit pack, together with the SYSMEM, provides the highest level of system control for Metropolis® EON. The SYSCTL circuit pack provides system-level user and operations systems interfaces, performs system-wide maintenance computations and performance monitoring, and supports serial telemetry and X.25, TCP/IP, and OSI/LAN interfaces.

The SYSCTL circuit pack can support two fully-integrated OT System Controller Shelves and up to four Complementary Shelves.

The following figure provides an overall block diagram of the SYSCTL circuit pack. The SYSCTL circuit pack is the highest level microprocessor in the 2-level control hierarchy of the Metropolis® EON.

Figure 4-13 SYSCTL Circuit Pack Block Diagram

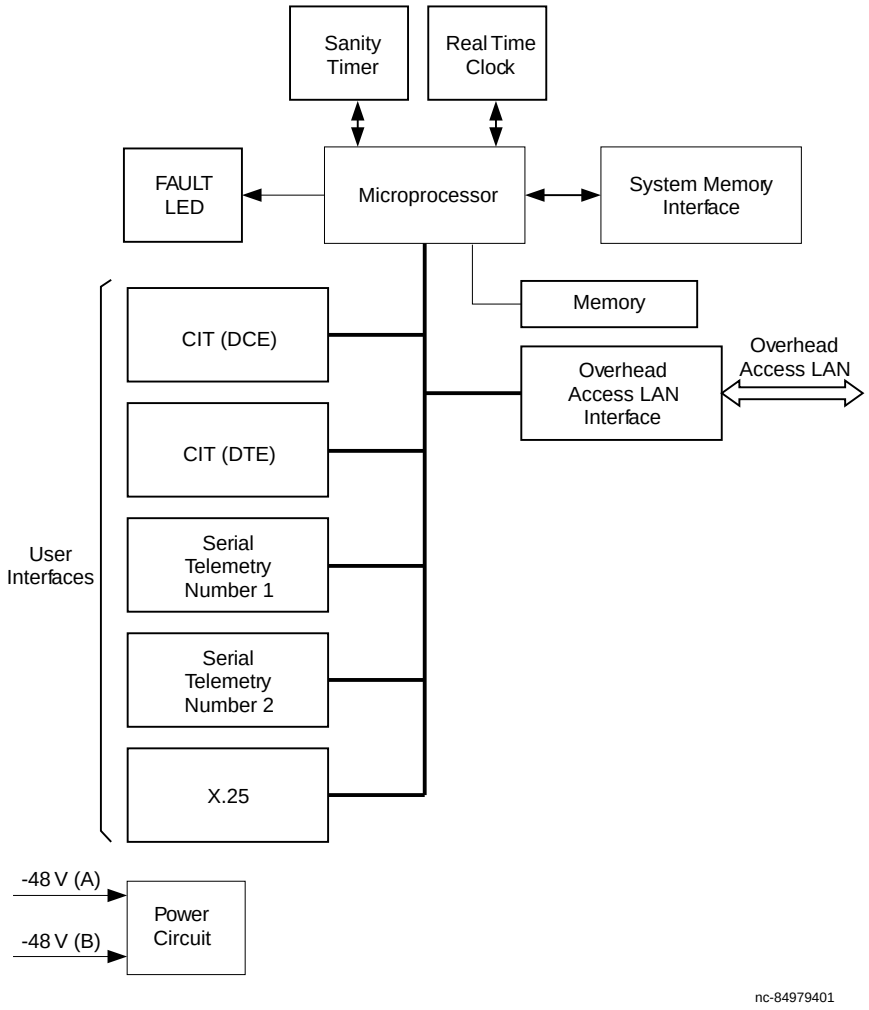

The start-up memory consists of 64 kilobytes of read-only memory. The start-up memory contains the program that allows the microprocessor to copy the executable code and data for the system from the nonvolatile memory of the SYSMEM circuit pack into the operating memory of the SYSCTL circuit pack. This allows the microprocessor to start up operation during a power-up or a reset condition or when initializing new software. The SYSCTL circuit pack also has a unique network services access point (NSAP) code in the read-only memory.

The main operating memory consists of 8 megabytes of dynamic random access memory (DRAM). Direct memory access (DMA) allows the SYSCTL circuit pack to copy the executable code and data for the system from the nonvolatile memory of the SYSMEM circuit pack into the operating memory during a power-up or reset condition, or when initializing new software.

The nonvolatile memory consists of 128 bytes of electrically-erasable programmable read-only memory (EEPROM). The nonvolatile memory is used to store information about the history of the SYSCTL circuit pack, such as the *Common Language CLEI* code and type/ version information.

The overhead access interface allows the SYSCTL circuit pack to communicate with the Overhead Controller - Tributary (TOHCTL) and Optical Translator Controller (OTCTL) circuit packs.

The SYSCTL circuit pack provides the following serial user interfaces:

- *CIT (DCE) interface*: The CIT (DCE) interface is configured as data circuit equipment (DCE) for direct craft interface terminal (CIT) access. The CIT (DCE) interface allows direct access to a PC running CenterLink Management Console software. The CIT (DCE) interface may also be provisioned to allow direct access to an ASCII-based terminal. The CIT (DCE) interface supports data rates up to 9600 baud.
- *CIT (DTE) interface*: The CIT (DTE) interface is configured as data terminating equipment (DTE) to allow a permanent connection to a modem. The CIT (DTE) interface allows dial-up access to a PC running CenterLink Management Console software. The CIT (DTE) interface may also be provisioned to allow access to an ASCII-based terminal. The CIT (DTE) interface supports data rates up to 9600 baud.
- *Serial telemetry interface*: The serial telemetry interface is used to transfer alarm, status, and control information to and from an external miscellaneous discrete unit via a 2400-baud EIA-422 port. The external miscellaneous discrete unit provides an additional 128 miscellaneous discrete environmental inputs and 32 control outputs.
- *TCP/IP*: The TCP/IP interface supports the Ethernet protocol and the Transaction Language 1 (TL1) message language. This interface is used to report performance monitoring data to the Lucent element management system, Navis™ Optical EMS.

- *OSI/LAN*: The OSI/LAN interface supports the Open Systems Interconnection (OSI) protocol and the TL1 message language. This interface is used to report performance monitoring data to Navis™ Optical EMS.
- *X.25 interface*: The X.25 interface supports X.25 protocol and the TL1 message language. This interface is used to report alarm and status conditions and performance monitoring data to the Bellcore Network Monitoring and Analysis (NMA) system, the Bellcore Operations System/Intelligent Network Elements (OS/INE), and the Lucent element management system, Navis™ Optical EMS using an EIA-232-D port operating at 1200 to 56,000 baud.

The SYSCTL circuit pack receives two sources of -48 volts that are diode OR'd, fused, and filtered. A modular DC-to-DC power converter produces +5 volts and -5 volts used on the circuit pack. The power converter also provides a +5 volt source for the FAULT LED indicator on any circuit pack that has a power failure.

The SYSCTL circuit pack monitors the two -48 volt sources to the circuit pack. If the SYSCTL circuit pack detects a failure of the onboard fuse or power converter, the red FAULT LED indicator will light. If the fuse or power converter fails, the SYSMEM circuit pack provides +5 volts to light the FAULT LED indicator on the SYSCTL circuit pack.

System Memory (SYSMEM)

The SYSMEM circuit pack provides memory support for the system controller (SYSCTL) circuit pack. The SYSMEM circuit pack contains erasable/programmable read-only memory (EPROM) for nonvolatile storage of the system state and user-provisioned data. It also contains a flash EPROM for nonvolatile storage of the software for the entire system. The SYSMEM circuit pack also supports the user panel, parallel telemetry, miscellaneous discretes, and office alarms.

The following figure shows a functional block diagram of the SYSMEM circuit pack. The nonvolatile program (executable code) storage is provided by 8 megabytes of flash erasable programmable read-only memory (flash-EPROM). This contains the main system software for all the controllers in the system (for example, System Controller, and board controllers). Flash-EPROM combines the nonvolatility of EPROM with the in-circuit reprogramming ability of electrically erasable programmable read-only memory (EEPROM). Flash-EPROM allows in-service software upgrades to be performed locally or remotely (via modem connections).

Figure 4-14 SYSMEM Circuit Pack Block Diagram

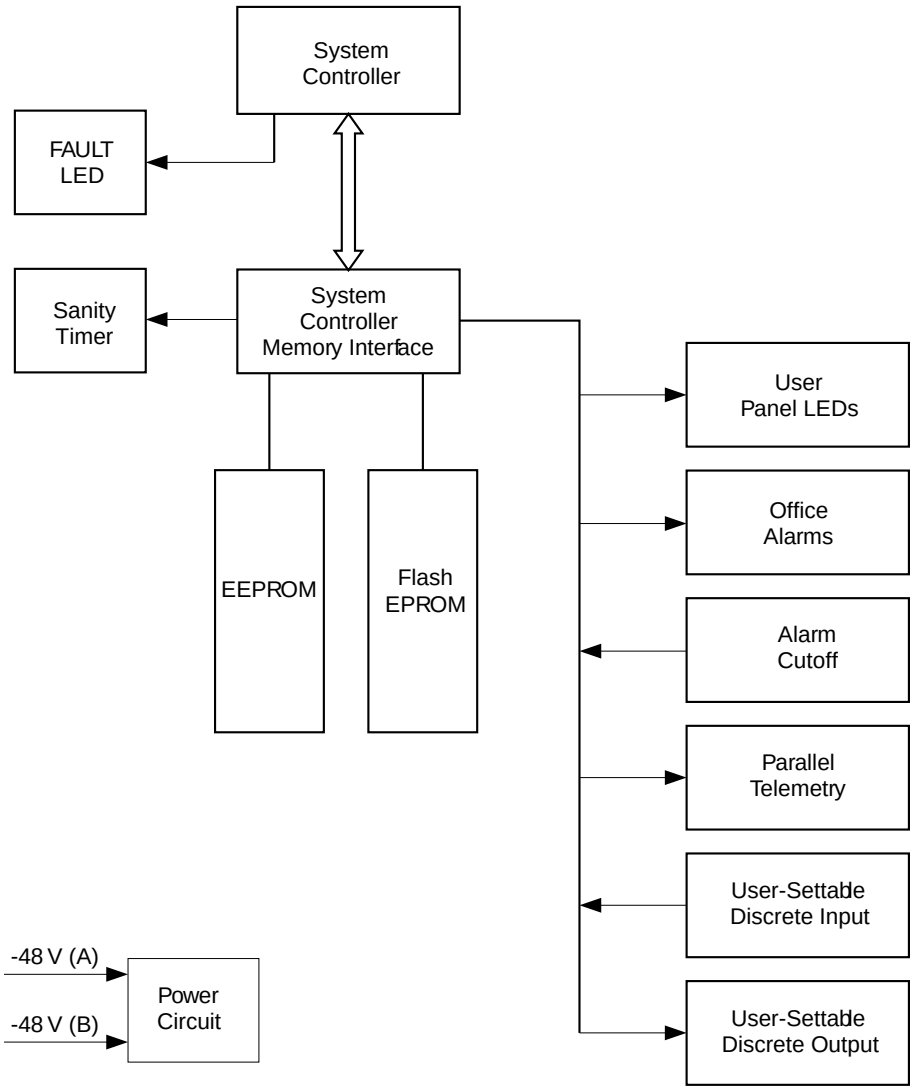

The nonvolatile configuration (data) storage is provided by 128 kilobytes of EEPROM. This contains all system state and user-provisioned data. This includes all system parameters with their original and current values. EEPROM is byte erasable and writable. This allows configuration information to be easily changed during system operation.

The nonvolatile memory consists of 128 bytes of electrically-erasable programmable read-only memory (EEPROM). The nonvolatile memory is used to store information about the history of the SYSMEM circuit pack such as the *CLEI* code and type/version information.

The SYSMEM circuit pack provides relays for the Metropolis® EON to interface with a central office alarm grid. The relays are controlled by the microprocessor on the SYSCTL circuit pack. Relays are provided for audible and visible alarms for the following.

- For SONET:
  - Critical
  - Major
  - Minor
- For SDH:
  - Critical
  - Prompt
  - Deferred

The normally closed contacts for the critical and major relays provide the alarm closure if power fails.

The SYSMEM circuit pack provides the outputs to light the following LED indicators on the user panel of End Terminal and Repeater Shelves.

- For SONET:
  - Critical (CR) alarm
  - Major (MJ) alarm
  - Minor (MN) alarm
  - Abnormal (ABN) status
  - Near-end activity (NE ACTY)
  - Far-end activity (FE ACTY)

- For SDH:
  - Critical (CR)
  - Prompt
  - Deferred
  - Abnormal
  - Info-N
  - Info-F

The SYSMEM circuit pack also accepts the alarm cutoff (ACO) input from the user panel of End Terminal and Repeater Shelves.

The SYSMEM circuit pack supplies the following alarms from the Metropolis® EON as remote information accessible to an operations system:

- For SONET:
  - Local CR, MJ, and MN alarms
  - Remote CR, MJ, and MN alarms.
- For SDH:
  - Local Critical, Prompt, and Deferred alarms
  - Remote Critical, Prompt, and Deferred alarms.

The SYSMEM circuit pack accepts 16 user-settable environmental inputs and provides 4 user-settable control outputs at a Metropolis® EON network element.

The SYSMEM circuit pack receives two sources of -48 volts that are diode OR'd, fused, and filtered. Two modular DC-to-DC power converters produce +5 volts and +12 volts used on the circuit pack. The +5 volt power converter provides a +5 volt source for the FAULT LED indicator on the System Controller (SYSCTL) circuit pack if a power failure occurs on the SYSCTL circuit pack. The +12 volt power converter is used to program the flash memory.

The SYSMEM circuit pack monitors the two -48 volt sources to the circuit pack. If the SYSMEM circuit pack detects a failure of the onboard fuse or power converter, the red FAULT LED indicator will light. If the fuse or +5 volt power converter fails, the SYSCTL circuit pack provides +5 volts to light the FAULT LED indicator on the SYSMEM circuit pack.

Tributary Overhead Controller (TOHCTL)

The TOHCTL circuit pack processes the overhead (D1 - D3) of the supervisory channel. The TOHCTL interfaces with the transmission overhead on the TLM circuit pack in order to deliver and receive DCC data. The TOHCTL interfaces with the system controller complex by means of the OALAN. Based on the configuration in which it is installed (Repeater or End Terminal), the TOHCTL (LEA102) circuit pack automatically determines whether to process the signals from slot TLM-1B or slot IAOLRP as SONET DCC or as IAOLAN-specific.

In R8.0 and later releases only the LEA102 TOHCTL may be used.

The following figure provides an overall block diagram of the TOHCTL circuit pack.

Figure 4-15 TOHCTL Circuit Pack Block Diagram

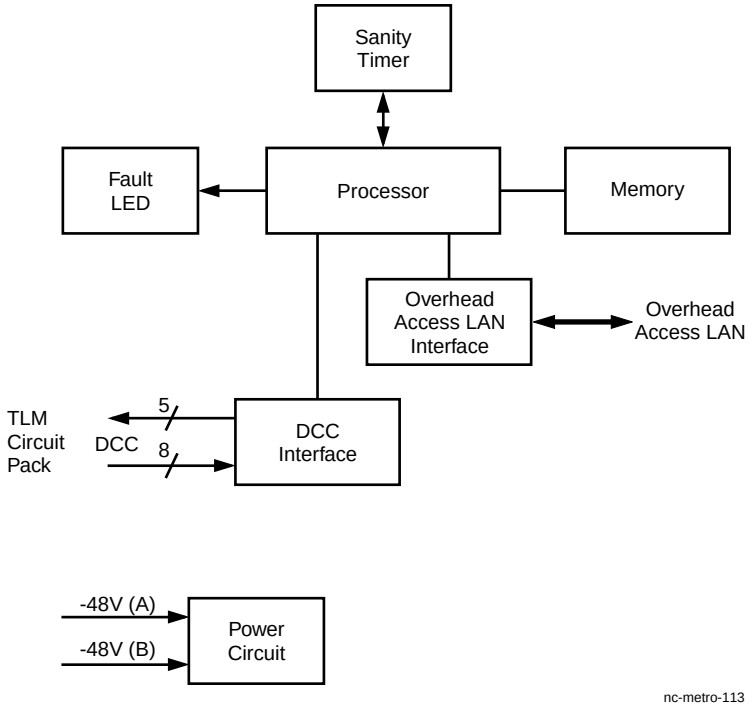

The processor shown in the TOHCTL circuit pack block diagram performs protocol processing of the OSI 7-layer stack for the SONET section DCC and the IAOLAN interface. The processor also manages the overhead access local area network (OALAN) communications with the SYSCTL circuit pack.

The start-up memory consists of 512 kilobytes of read-only memory. The start-up memory contains the program that allows the processor to load the executable code and data from the SYSCTL circuit pack into the operating memory. This allows the processor to start up operation during a power-up, or a reset condition, or when initializing new software.

The main operating memory consists of 32 megabytes of DRAM. Direct memory access (DMA) allows the processor to load the executable code and data received from the SYSCTL circuit pack (via the overhead access local area network) into the operating memory during a power-up, or reset condition, or when initializing new software.

The nonvolatile memory consists of 256 bytes of electrically-erasable programmable read-only memory (EEPROM). The nonvolatile memory is used to store information about the history of the TOHCTL circuit pack such as the *CLEI* code and type/version information.

The DCC interface interacts with the Telemetry Controller (TLM) circuit packs. The DCC interface performs protocol processing for layer 1 (physical) of the OSI 7-layer stack for the section DCC of the supervisory signal.

In the receive direction, the TLM circuit pack transmits the DCC overhead bytes via the overhead channel to the DCC interface. The DCC interface transmits the information to the processor for OSI protocol processing.

In the transmit direction, the DCC interface accepts the DCC bytes from the processor and transmits the information via the overhead channel to the TLM circuit pack. This information provides end-to-end communications and maintenance.

The DCC interface also supports bidirectional 1x1 protection switching for the supervisory signal DCC of optical lines 1 and 2 only.

The following table shows the section DCC bytes that are provided by the TOHCTL circuit pack.

Table 4-2 Overhead Bytes

Name	Overhead Byte	Data Rate	Access
DCC	D1-D3	192 kb/s	System Controller

The TOHCTL circuit pack supports an IAOLAN interface to an element management system (for example, the Lucent element management system, Navis™ Optical EMS. The IAOLAN interface uses the OSI or TCP/IP protocol and the TL1 message language.

The IAOLAN interface interacts with a 10BaseT LAN signal (10 Mb/s Ethernet LAN) through a balanced driver/receiver. The IAOLAN interface performs protocol processing for layer 1 (physical) of the OSI 7-layer stack for the IAOLAN data.

In the receive direction, the IAOLAN interface accepts IAOLAN data from the INTRAOFFICE LAN connector. The IAOLAN data is routed from the INTRAOFFICE LAN connector, through the IAOLRP circuit pack in the TLM 1B slot, to the IAOLAN Interface. The IAOLAN interface transmits the information to the processor for OSI protocol processing.

In the transmit direction, the IAOLAN interface accepts the IAOLAN data from the processor and transmits the information to the INTRAOFFICE LAN connector. The IAOLAN data is routed from the IAOLAN interface, through the IAOLRP circuit pack in the TLM 1B slot, to the INTRAOFFICE LAN connector.

The overhead access local area network (OALAN) interface allows the TOHCTL circuit pack to communicate with the SYSCTL circuit pack. The SYSCTL circuit pack allows users to access the section DCC using the CIT and message-based operations systems (IAOLAN/TL1) interfaces for single-ended operations.

The TOHCTL circuit pack receives two sources of -48 volts that are diode OR'd, fused, and filtered. A modular DC-to-DC power converter produces +5 and +3.3 volts used on the circuit pack.

The TOHCTL circuit pack monitors the two -48 volt sources to the circuit pack. If the TOHCTL circuit pack detects a failure of the onboard fuse or power converter, the red FAULT LED indicator will light. If the fuse or power converter fails, the SYSCTL circuit pack provides +5 volts to light the FAULT LED indicator on the TOHCTL circuit pack.

OT Controller (OTCTL)

To facilitate integration of the OT with Metropolis® EON the OTCTL is used to integrate the OTUs into the Metropolis® EON control structure. It occupies three slots in the OT System Controller Shelf.

Operationally, the integration of these circuit packs makes the combination of Metropolis® EON and OT appear as a single network element. The OTCTL controls all of the OTUs in up to three OT shelves via the BCLAN connections provided in the backplane and inter-shelf OT cabling.

The following figure provides an overall block diagram of the OTCTL circuit pack.

Figure 4-16 OTCTL Circuit Pack Block Diagram

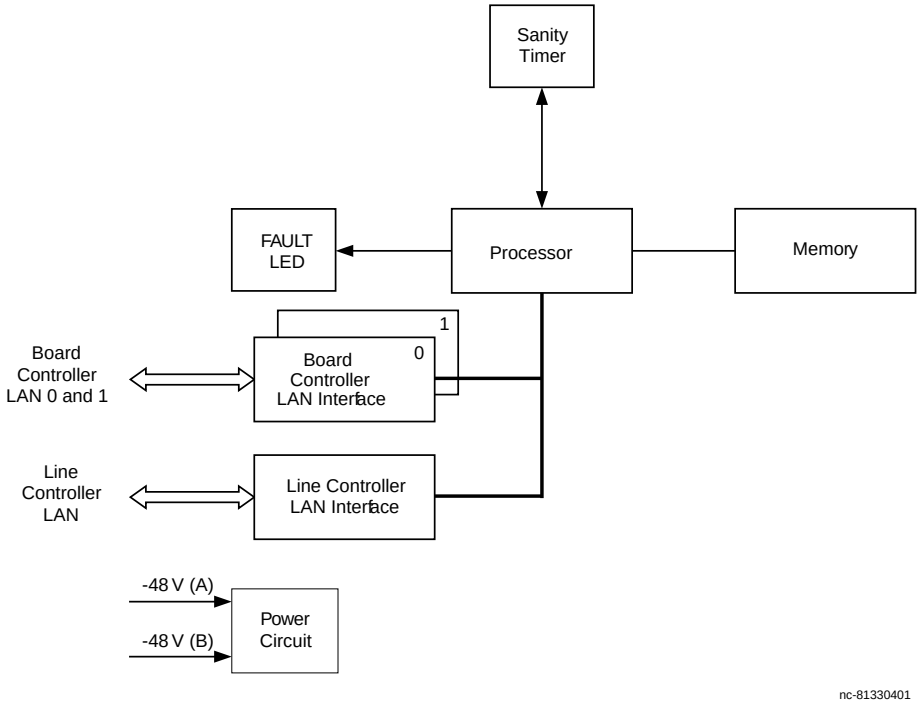

The start-up memory of the OTCTL consists of 64 kilobytes of read-only memory. The start-up memory contains the program that allows the processor to load the executable code and data from the SYSCTL circuit pack into the operating memory. This allows the processor to start up operation during a power-up or a reset condition, or when initializing new software.

The main operating memory of the OTCTL circuit pack consists of 8 megabytes of DRAM. Direct memory access (DMA) allows the board controller to load the executable code and data received from the SYSCTL circuit pack (via the overhead access local area network) into the operating memory during a power-up or reset condition, or when initializing new software.

The nonvolatile memory consists of 128 bytes of electrically-erasable programmable read-only memory (EEPROM). The nonvolatile memory is used to store information about the history of the OTCTL circuit pack such as the *CLEI* code and type/version information.

The overhead access local area network (LCLAN) interface allows the OTCTL circuit pack to communicate with the SYSCTL circuit pack.

Two board controller local area network (BCLAN) interfaces (BCLAN 0 and BCLAN 1) allow the OTCTL circuit pack to communicate with the board controllers on the OTU and QUAD OTU circuit packs.

The OTCTL circuit pack receives two sources of -48 volts that are diode OR'd, fused, and filtered. A modular DC-to-DC power converter produces +5 volts used on the circuit pack. The power converter also provides two +5 volt sources for the FAULT LED indicators on the OTU and QUAD OTU circuit packs if a power failure occurs.

The OTCTL circuit pack monitors the two -48 volt sources to the circuit pack. If the OTCTL circuit pack detects a failure of the onboard fuse or power converter, the red FAULT LED indicator will light. If the fuse or power converter fails, the SYSCTL circuit pack provides +5 volts to light the FAULT LED indicator on the OTCTL circuit pack.

Telemetry (TLM) Circuit Pack

The TLM circuit pack provides a supervisory channel on the optical line. This channel is used for fault location and maintenance functions. In addition, three orderwire channels, E1, E2, and F are available with the LDA4.

A fully-equipped End Terminal Shelf requires one TLM circuit pack per line, while a fully-equipped Repeater Shelf requires two TLM circuit packs per line. When the end terminal uses the telemetry-through feature, two TLM circuit packs per line are used. (For more information on DCC connectivity see Chapter 3.)

> **Important!** In 32-channel systems, only the LDA4 TLM may be used for the optical supervisory channel (OSC). The LDA1 may be used for TLM feed-through only.

The main differences between the LDA4 TLM circuit pack and the LDA1 are:

- The 155 Mb/s SONET/SDH OC3/STM1-like supervisory channel in the LDA1 is replaced with a Manchester-encoded E1 Signal operating at 2.048 Mb/s. The wavelengths of the LDA4 and LDA1 supervisory signals are 1510 nm and 1532 nm, respectively.
- The LDA4 TLM circuit pack does not have a Customer Maintenance Signal Channel (CMS); whereas the LDA1 does support the CMS.
- The transmitted Supervisory Signal Channel is derived from a local clock. Unlike the LDA1, the LDA4 does not support a through-timed mode (derived from an incoming signal such as the CMS channel).

Refer to the following figure for a block diagram of the LDA4 TLM circuit pack. A Manchester CODEC interfaces with the transmitter and receiver to convert from the 4.096 baud rate to/from 2.048 Mb/s E1 signal in NRZ format. The data passes through a clock and data recovery (CDR) circuit, which generates a re-timed 2.048 Mb/s signal and a 2.048-MHz clock. The clock provides timing for the receive direction. The transmit direction is clocked by a local oscillator.

Figure 4-17 LDA4 TLM Circuit Pack Block Diagram

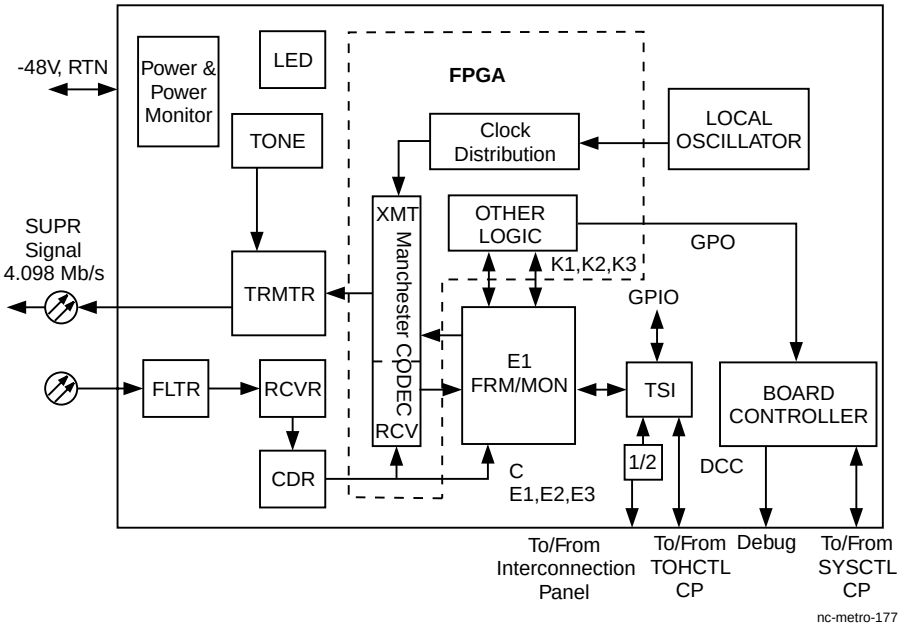

The E1 signal is passed to an E1 framer module and Time Slot Interchanger (TSI). The TSI breaks down the signal into the subchannels shown in the following table. The E1 signal is the European equivalent to the T1, except asynchronously carrying 30 channels (bytes) of user data, and two channels for overhead. An FPGA allows for the extraction/monitoring, manipulation, and extraction of bits/bytes within E1 channel/timeslots. The control interface between VLSI chips and the CPU is via GPIO. The transmit supervisory signal is combined as before with the other optical channels in the out-going Optical line signal to the next NE.

The following table identifies the byte allocation for the E1 Signal in the Supervisory Channel.

Table 4-3 E1 Signal Supervisory Channel Byte Allocation

Time Slot	Use	Time Slot	Use	Time Slot	Use	Time Slot	Use
0	FRM/CRC	8	X	16	Signal Channel	24	X
1	OW1 (E1)	9	X	17	K1	25	X
2	DL-1 (D1)	10	X	18	X	26	X
3	DL-2 (D2)	11	OW3 (F1)	19	X	27	K3 (c1)[1]
4	DL-3 (D3)	12	X	20	X	28	X
5	X	13	X	21	X	29	X
6	OW2 (E2)	14	X	22	K2	30	X
7	X	15	X	23	X	31	X

Notes:

1. K3 in E1 replaces C1 in SONET for Optical Line ID

The hardware architecture allows monitoring, manipulation, and inserting data in the unused E1 voice/data channel bytes to simulate the functionality of the required SONET overhead bytes. This is accomplished primarily through the time slot interchanger (TSI) and the FPGA design. The appropriate overhead channels are marked with their equivalent SONET functionality in the previous table to provide:

- DCC (D1-D3)
- Orderwire (E1, E2, F1),
- Protection switching (K1, K2),
- Optical Line ID mismatch/Installation Self-Test (K3 in E1 signal replaces C1 in SONET).

All other digital defect and performance monitoring data for the supervisory signal is derived in software from the E1 Frame/CRC overhead byte. These include:

- Coding Violations (CV-L)
- Errored Seconds (ES-L)
- Severely Errored Seconds (SES-L)
- Unavailable Seconds in Signal Degrade (SD)
- Signal Fail (SF)

The LEA207 and LEA307 can only be used with LDA4. The LEA7 and LEA104 can only be used with LDA1. The LEA7B and LEA107B can be used with both LDA1 and LDA4.

The following table shows the compatibility of OA and TLM Circuit Packs.

Table 4-4 OA and TLM Circuit Pack Compatibility

	LDA1	LDA4
LEA207		X
LEA307		X
LEA7B	X	X
LEA107B	X	X
LEA7	X	
LEA104	X	

Intra-Office LAN Relay Pack (IAOLRP)

The IAOLRP (LAN) circuit pack provides a connection to the IAOLAN interface and supports DCC connectivity between the two bays/shelves in a ring terminal. This circuit pack is required in Metropolis® EON End Terminal locations where the IAOLAN feature is deployed. It resides in the TLM-1B slot of the Metropolis® EON shelf (see Figure 4-8, “Metropolis® EON Ring Terminal Shelves with LAN Connection”). The IAOLRP circuit pack contains no active circuitry.

The following figure provides an overall block diagram of the IAOLRP circuit pack.

Figure 4-18 LDA3 IAOLRP Circuit Pack Block Diagram

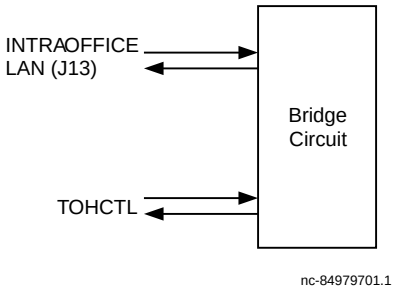

In the receive direction, the IAOLRP circuit pack bridges IAOLAN data from the INTRAOFFICE LAN connector (on the interconnection panel) to an overhead channel port on the TOHCTL circuit pack. The TOHCTL circuit pack performs Open System Interconnection (OSI) protocol processing for the IAOLAN interface.

In the transmit direction, the IAOLRP circuit pack bridges IAOLAN data from the overhead channel on the TOHCTL circuit pack to the INTRAOFFICE LAN connector.

□

Transmission Circuit Packs

Introduction

The following lists the transmission circuit packs in Metropolis® EON which may be used in 32-channel systems and indicates which ones are new in Release 8.2:

- Optical Amplifier 3 (OA3) 32-channel - new in Release 8.2
- Optical Amplifier 2 (OA2) 32-channel
- Optical Amplifier (OA) provides 16-wavelength support
- Line Interface Receive (LIRCV) Unit
- Line Interface Transmit (LITX) Unit
- Optical Multiplexer Unit for (OMU32) channels 17-32 - new in Release 8.2
- Optical Multiplexer Unit 16 (OMU16) provides both 32- and 16-wavelength support
- Optical Multiplexer Unit (OMU) provides 16-wavelength support
- Optical Demultiplexer Unit (ODU32) - channels 17-32 - new in Release 8.2
- Optical Demultiplexer Unit 16 (ODU16) provides both 32- and 16-wavelength support
- Optical Demultiplexer Unit (ODU) provides 16-wavelength support
- Line Interface Heater (LIHTR) - new in Release 8.2
- Universal Broadband (UBB) Optical Translator Port Module (OTPM UBB) Add - new for Release 8.2
- Universal Broadband (UBB) Optical Translator Port Module (DUBB) Drop - new for Release 8.2
- 2:1 data multiplexer OTU (2DM25) and its small form factor plug-in (SFP) module - new in Release 8.2
- Optical Translator Port Module Enhanced LSBB (ELSBB) - new in Release 8.2
- 10G Optical Translator Unit (OTU) Add - new in Release 8.2
- 10G Optical Translator Unit (OTU) Drop - new in Release 8.2
- 10G Optical Translator Unit (OTU) Through - new in Release 8.2
- Optical Translator Port Module 25 (OTPM25) Add and Drop

- Optical Unidirectional Path-switched Ring (OUPSR) multi-mode (LEP3) and single-mode (LEP2) interface new in Release 8.2)
- Quad Optical Translator Unit (QOTU) Carrier UBB (QOTUUB) - new for Release 8.2
- Quad Optical Translator Unit Carrier 25 (QOTU25)
- Quad Optical Translator Unit Carrier (QOTU)
- Pre-release R8.0 OTUs/OTPMs

All circuit pack, unit, and port module assemblies connect to the backplane. All optical connections in and out of the circuit packs run through faceplate-mounted optical connectors.

Optical Amplifier (OA3)

The Release 8.2 OA3 circuit pack (see following Figure 4-19, “OA3 (LEA307) Circuit Pack” and Figure 4-20, “OA3 Block Diagram”, incorporates a higher power Variable Gain Optical Amplifier Module (VGOAM) with internal power monitoring and gain adjustment. The new R8.2 OA3 circuit pack has the following features:

- 32-channel support which will allow upgrade of existing 16-channel LEA7B routes to 32 channels.
- Mid-stage connections to DCMs which allow greater route distances for 10 Gb/s signals.
- An output connector located under a safety cover to allow connector removal only after the circuit pack has been disengaged from the backplane.
- Automatic Power Shutdown (APSD)
- Support of the 1510 nm optical supervisory channel (OSC)
- Software-controlled, per channel output power (automatic gain control).
- Software-controlled Variable Optical Attenuator (VOA) to maintain gain flatness.
- Hardware- and software-controlled power transient suppression.

The OA3 will only support the supervisory channel at 1510 nm using the LDA4 TLM circuit pack.

Figure 4-19 OA3 (LEA307) Circuit Pack

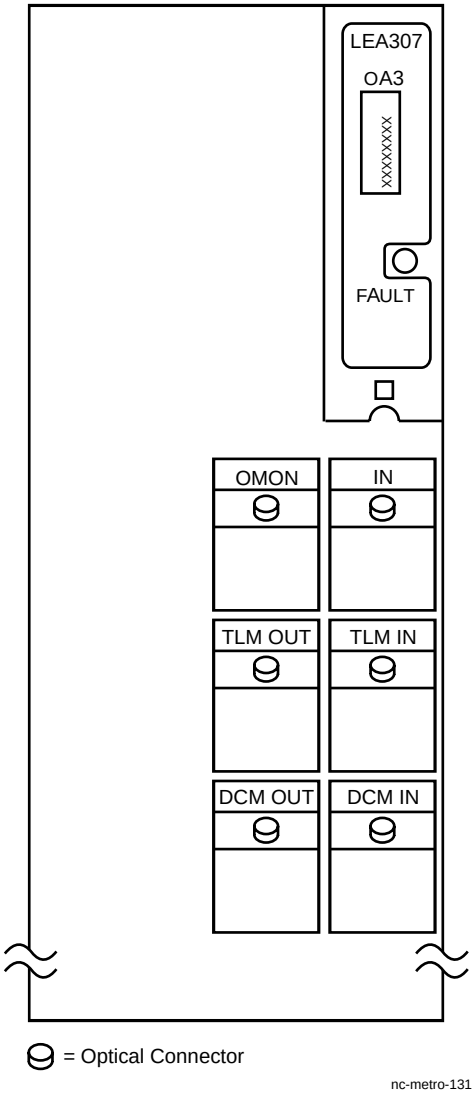

Important! The 32-wavelength 10G OA will not support the original 1532 nm OSC because the filter for the 1532 nm signal overlaps the spectrum needed for channels 17-32.

The OA3 operates in the 1.5 µm wavelength band. The main components of the OA3 are as follows:

- **Pump laser –** Two high powered optical pump lasers provide power which is combined with the 1.5 µm signal. These pumps are not redundant.

- **Filter–** At the OA3 input, a filter separates the light at 1510 nm from the rest of the 1.5 µm band. This filtering separates the supervisory channel from the optical (signal) wavelengths and reduces noise
- **Optical splitter–** An optical splitter at the OA3 output splits off a small amount of light for monitoring purposes.
- **Optical isolators–** Optical isolators prevent optical reflections from degrading system performance.
- **VGOAM (Variable Gain Optical Amplifier Module)–** performs automatic gain control under software control
- DCM in and out ports

The following figure shows an overall block diagram of an OA3 circuit pack.

Figure 4-20 OA3 Block Diagram

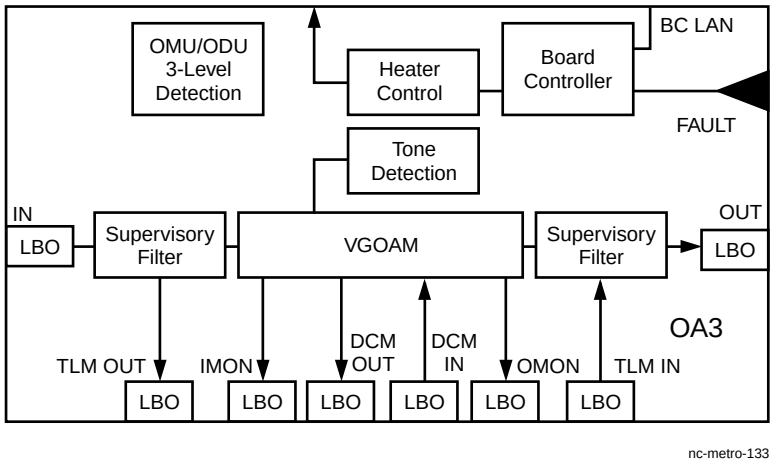

Metropolis® EON demultiplexes the signals at the other end of the optical line and passes them on to compatible optical receivers.

For details on span length and network topologies and a description of the engineering rules used in building Metropolis® EON networks and management subnetworks, see Chapter 5, “System Planning and Engineering”.

The OA3 circuit pack does the following:

- Amplifies the optical line signal
- Provides power monitors on the optical monitor point provided by the amplifier module
- Controls the pump lasers which, in turn, automatically control OA output power
- Provides add/drop ports for the supervisory signal
- Provides temperature control for the ODU16
- Receives data from the OMU16s and ODU16s for version and type information.

Optical Amplifier (OA2)

The Release 8.0 OA2 circuit pack (see following Figure 4-21, “OA2 (LEA207) Circuit Pack” and Figure 4-22, “OA2 Block Diagram” has the following features:

- Support of 100 GHz-spaced optical channels from 192.10 THz to 195.90 THz.
- Support the 1510 nm optical supervisory channel (OSC)
- Software-controlled output power based on the number of channels equipped (automatic gain control).
- Software-controlled Variable Optical Amplifier (VOA) to maintain gain flatness.
- Hardware- and software-controlled power transient suppression.

Figure 4-21 OA2 (LEA207) Circuit Pack

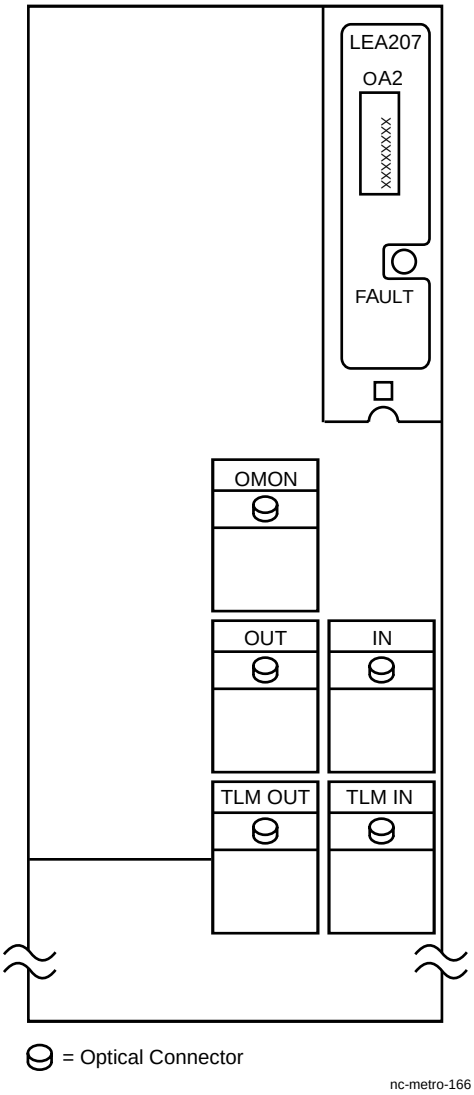

The OA2 will only support the supervisory channel at 1510 nm using the LDA4 TLM circuit pack.

The OA2 operates in the 1.5 µm wavelength band. The main components of the OA2 are as follows:

- **Pump laser –** Two high powered optical pump lasers provide power which is combined with the 1.5 µm signal. These pumps are not redundant.
- **Filter–** At the OA2 input, a filter separates the light at 1510 nm from the rest of the 1.5 µm band. This filtering separates the supervisory channel from the optical (signal) wavelengths and reduces noise
- **Optical splitter–** An optical splitter at the OA2 output splits off a small amount of light for monitoring purposes.
- **Optical isolators–** Optical isolators prevent optical reflections from degrading system performance.
- **VGOAM (Variable Gain Optical Amplifier Module)–** performs automatic gain control under software control

  The following figure shows an overall block diagram of an OA2 circuit pack.

Figure 4-22 OA2 Block Diagram

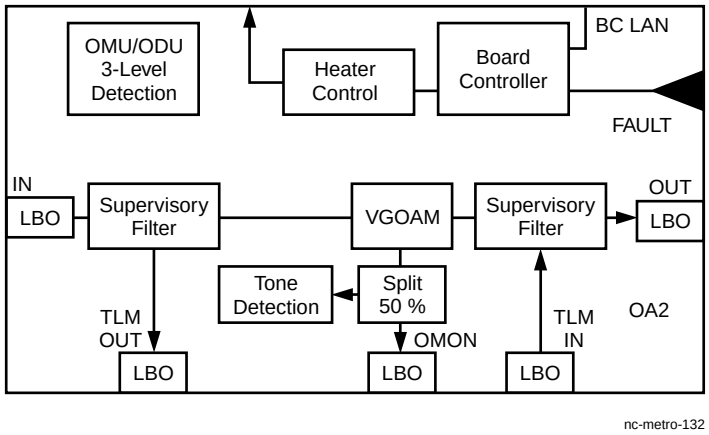

Metropolis® EON demultiplexes the signals at the other end of the optical line and passes them on to compatible optical receivers.

For details on span length and network topologies and a description of the engineering rules used in building Metropolis® EON networks and management subnetworks, see Chapter 5, “System Planning and Engineering”.

The OA2 circuit pack does the following:

- Amplifies the optical line signal
- Provides power monitors on the optical monitor point provided by the amplifier module
- Controls the pump lasers which, in turn, automatically control OA output power
- Provides add/drop ports for the supervisory signal
- Provides temperature control for the ODU16
- Receives data from the OMU16s and ODU16s for version and type information.

Optical Amplifier (OA)

The 16-channel OAs operate in the 1.5 µm wavelength band. The main components of the OAs are as follows:

- **Pump lasers–** Two high powered optical pump lasers, operating at a wavelength of 980 nm, provide power which is combined with the 1.5 µm signal
- **Filter–** In the middle of the OA, a filter separates the light at 1532 or 1510 nm from the rest of the 1.5 µm band. This filtering separates the supervisory channel from the optical (signal) wavelengths and reduces noise
- **Optical splitter–** An optical splitter in the OA splits off a small amount of light for monitoring purposes
- **Optical isolators–** Optical isolators prevent optical reflections from degrading system performance.

Metropolis® EON demultiplexes the signals at the other end of the optical line and passes them on to compatible optical receivers.

For details on span length and network topologies and a description of the engineering rules used in building Metropolis® EON networks and management subnetworks, see Chapter 5, “System Planning and Engineering”.

The OA circuit pack does the following:

- Amplifies the optical line signal
- Provides power monitors on the optical monitor point provided by the amplifier module
- Controls the pump lasers which, in turn, automatically control OA output power
- Provides add/drop ports for the supervisory signal

- Provides temperature control for the ODU
- Receives data from the OMUs and ODUs for version and type information.

Important! Metropolis® EON uses the LEA107B OA for Long Span, 16-wavelength systems. Long Reach systems use the LEA7B OA. The LEA7B is required for single-OA operation.

Line Interface Receive (LIRCV) Unit

The Release 8.0 Line Interface Receive (LIRCV) circuit pack (see the following figure) supplies the supervisory channel (1510 nm) drop filter for single-OA applications. This circuit pack also controls the heater for any associated ODU16 when a receive amplifier is not equipped.

Figure 4-23 LIRCV (LEA209) Circuit Pack

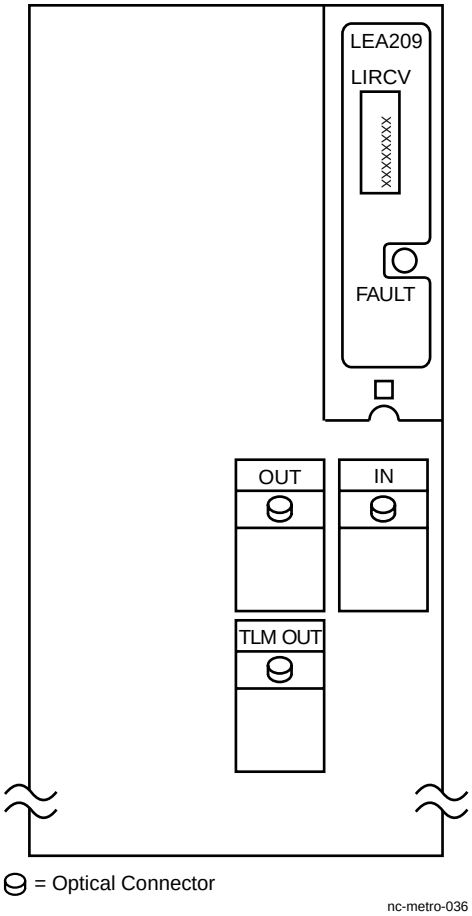

Important! The LIRCV may be used with 16-channel optical amplifiers as long as an OMU16/ODU16 is also used.

When amplification is not needed at the receive end, the Line Interface Receive (LIRCV) circuit pack allows a shelf to receive a signal without having a receive OA by providing the following:

- ODU16 detection and heater control for any associated single-OA applications when an amplifier is not equipped
- tone based channel detection for automatic power shutdown APSD control and performance monitoring (PM)

The following figure shows an overall block diagram of an LIRCV circuit pack.

Figure 4-24 LIRCV (LEA209) Circuit Pack Block Diagram

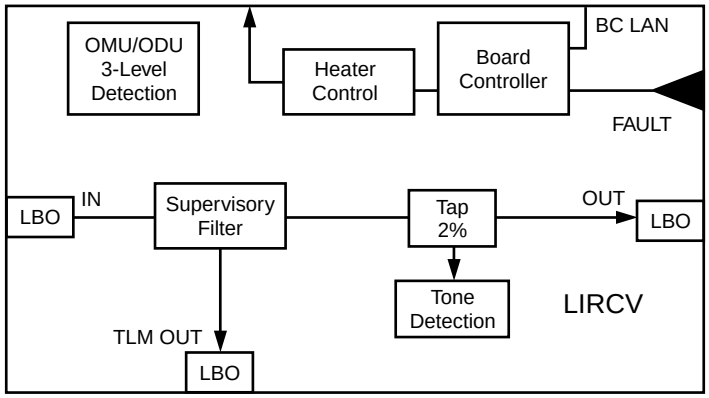

nc-metro-057

Line Interface Transmit (LITX) Unit

The Release 8.0 Line Interface Transmit (LITX) circuit pack (see the following figure) supplies the supervisory add filter for zero-OA applications. This circuit pack also controls the heater for any associated OMU16 when a transmit amplifier is not equipped.

Figure 4-25 LITX (LEA211) Circuit Pack

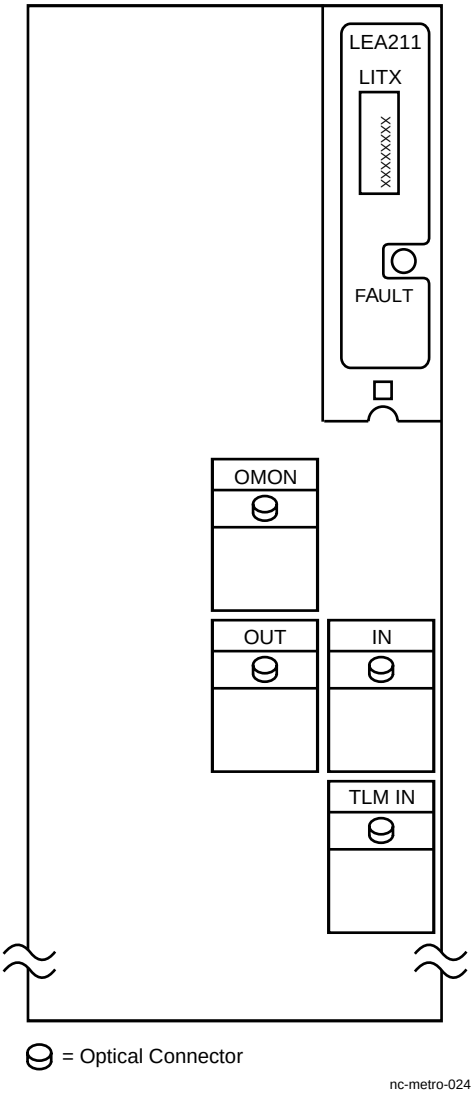

Important! The LITX may be used with 16-channel optical amplifiers as long as an R8.0 OMU16/ODU16 is also used.

When amplification is not needed at the transmit end, the Line Interface Transmit (LITX) circuit pack allows a shelf to transmit a signal without having a transmit OA by providing the following:

- OMU16 detection and heater control for zero-OA applications
- optical monitor connector for test access to balance OMU inputs

  tone based channel detection for automatic power shutdown APSD control and performance monitoring (PM)

  The following figure shows an overall block diagram of an LITX circuit pack.

Figure 4-26 LITX (LEA211) Circuit Pack Block Diagram

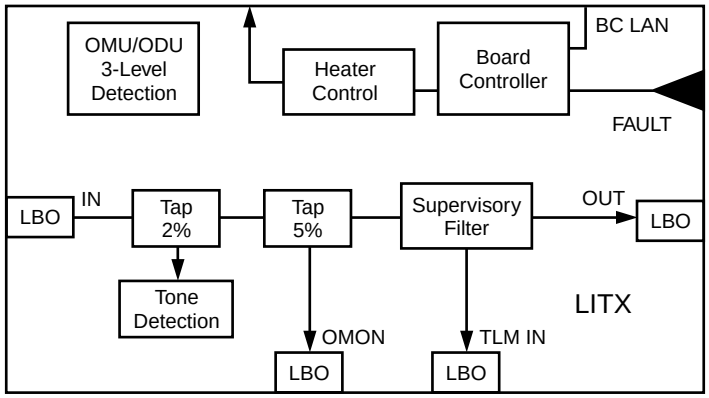

nc-metro-058

Optical Multiplexer Unit 32 (OMU32)

The Release 8.2 OMU32 508A/B multiplexes channels 17-32 into a single signal. The 508A/B has 17-32 OUT connector so that it can transmit the multiplexed 17-32 signal to an OMU16 which combines it with the 1-16 signal and transmits the combined signal onto the optical line. The 508A has a through loss of 8.0 dB and the 508B has a through loss of 5.5 dB.

A filter device is used with the 508A and 508B OMU instead of a coupler device to achieve less insertion loss.

Figure 4-27 508A and 508B OMU32 (without Combiner) Faceplates

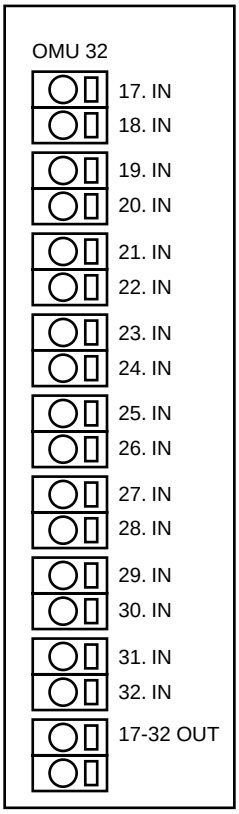

The following figure depicts the OMU32 and shows how it interworks with the OMU16 (described next in this chapter). The upgrade to 32 channels is a non-service affecting procedure.

Figure 4-28 OMU16/32 Circuit Pack Block Diagram

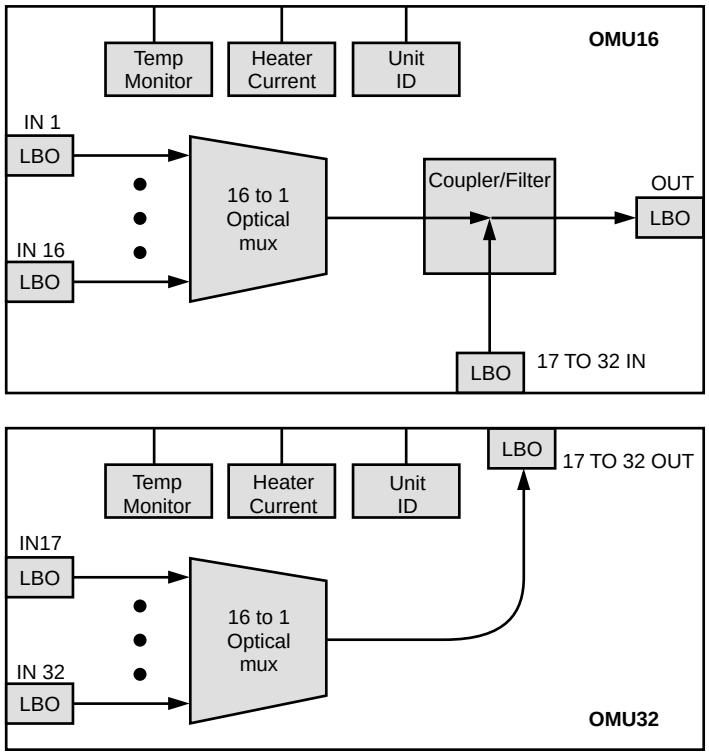

Optical Multiplexer Unit 16 (OMU16)

The 32-wavelength ready OMU16 has a combiner and input connector for channels 17-32 providing the support for future in-service growth of channels 17-32. The 507A has insertion loss of 8 dB. The 507B has insertion loss of 5.5 dB.

A filter device is used with the 507A and 507B OMU instead of a coupler device to achieve less insertion loss.

Figure 4-29 507A and 507B OMU16 Faceplates

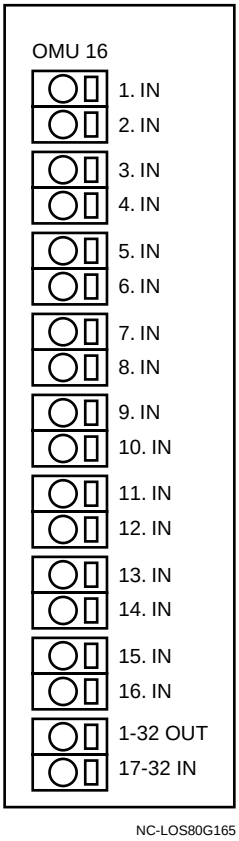

Important! The OMU16 circuit packs can be used with 16- or 32-channel systems.

The following figure depicts the OMU16 and shows how it interworks with the OMU32 (described previously in this chapter). The upgrade to 32 channels is a non-service affecting procedure.

Figure 4-30 OMU16/32 Circuit Pack Block Diagram

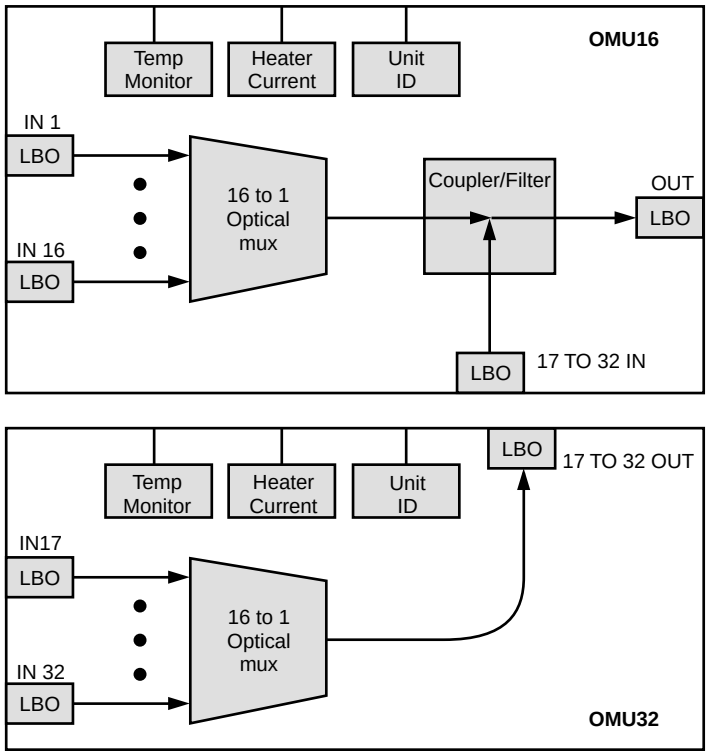

Optical Multiplexer Unit (OMU)

Used at the end terminal site, the OMU combines up to sixteen optical wavelengths into one signal called the optical line signal. The 506A OMU which is used with Metropolis® EON combines up to 16 optical wavelengths into one signal. This signal, known as the optical line signal, has a through loss of ≤ 14 dB.

Optical Demultiplexer Unit (ODU32)

The Release 8.2 ODU32 608A/B receives a multiplexed 17-32 signal and demultiplexes it into channels 17-32. The 608A has a through loss of 8.0 dB and the 608B has a through loss of 5.5 dB.

Figure 4-31 608A and 608B ODU32 (without Splitter) Faceplates

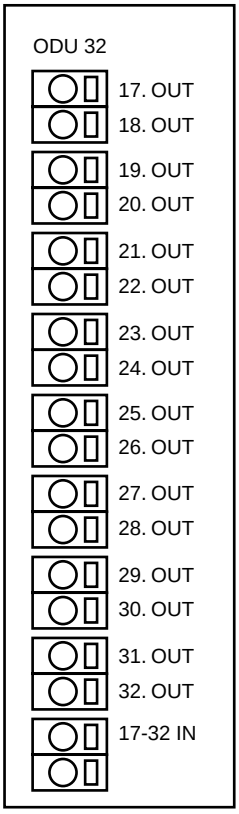

nc-metro-143

The following figure depicts the ODU32 and shows how it interworks with the ODU16 (described next in this chapter). The upgrade to 32 channels is a non-service affecting procedure.

Figure 4-32 ODU16/32 Circuit Pack Block Diagram

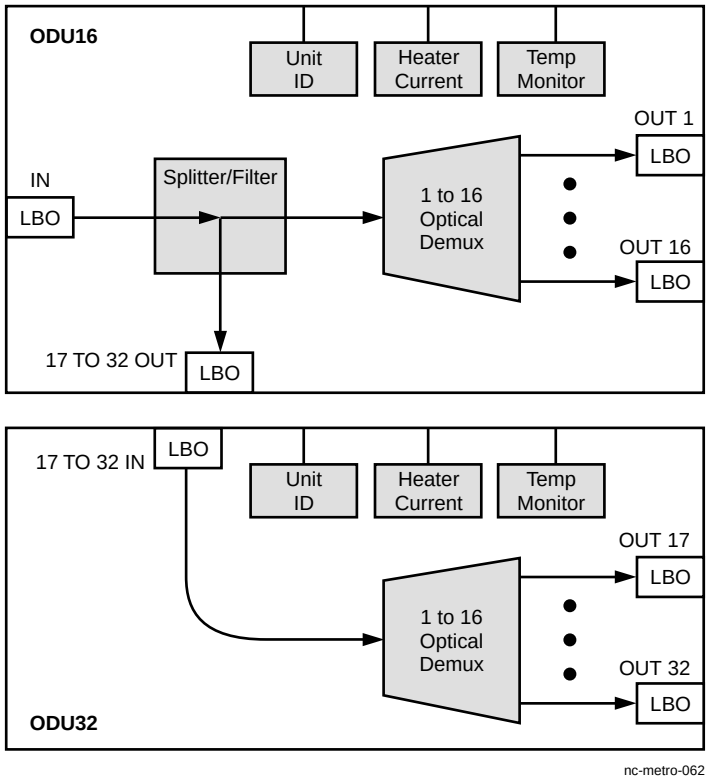

Optical Demultiplexer Unit (ODU16)

The Release 8.0 ODU16 has a splitter and output connector for channels 17-32 providing support for future in-service growth of channels 17-32. The 607A has insertion loss of 8 dB; the 608A has ODU16 has insertion loss of 5.5 dB.

Figure 4-33 607A and 607B ODU16 Faceplates

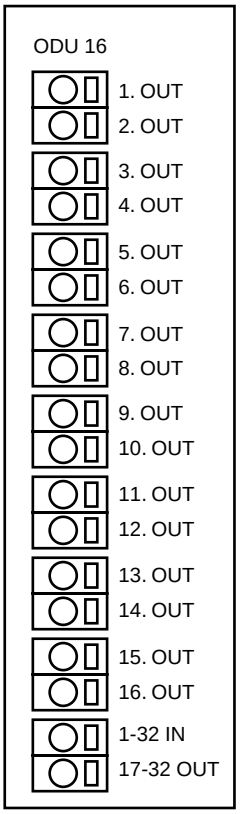

Important! The ODU16 circuit packs can be used with 16- or 32-channel systems.

The following figure depicts the ODU16 and shows how it interworks with the ODU32. The upgrade to 32 channels is a non-service affecting procedure.

Figure 4-34 ODU16/32 Circuit Pack Block Diagram

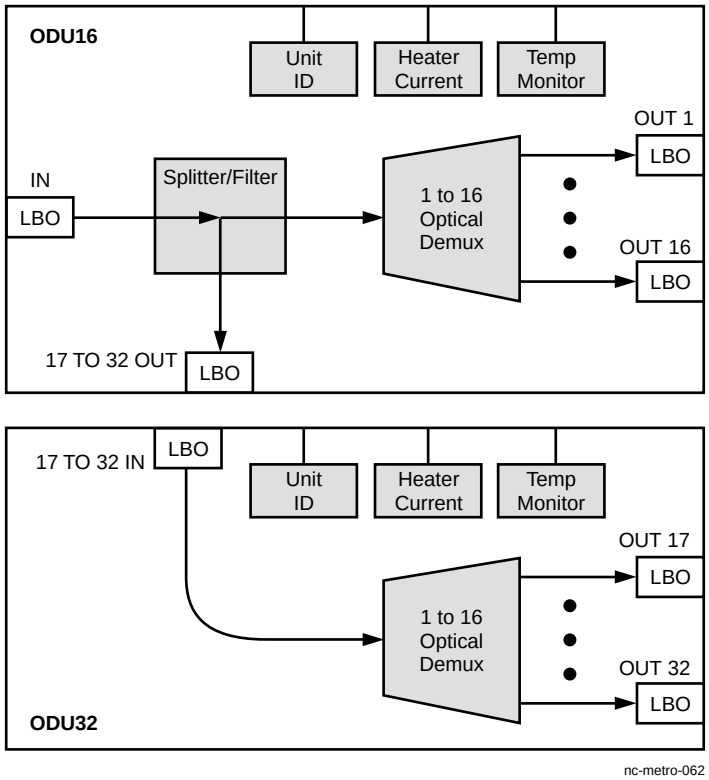

Optical Demultiplexer Unit (ODU)

The ODU demultiplexes the input optical signal into a maximum of sixteen wavelengths. The types of ODUs used with Metropolis® EON are:

- 606A (sixteen wavelength; without 1510 nm Supervisory Channel Output, and a through loss of ≤ 14 dB)
- 606B (sixteen wavelength; with 1510 nm Supervisory Channel Output, and a through loss of ≤ 14 dB)

Important! The 606B ODU is used for single-OA operation. Alternatively, the 32-channel ready 607A or 607B ODU may be used with the LIRCV circuit pack for single-OA operation in 16-channel systems.

Line Interface Heater (LIHTR) Unit

The Release 8.2 Line Interface Heater (LIHTR) circuit pack (see the following figure) provides OMU32 and ODU32 detection and heater control for 32-channel applications.

Figure 4-35 LIHTR (LEA210) Circuit Pack

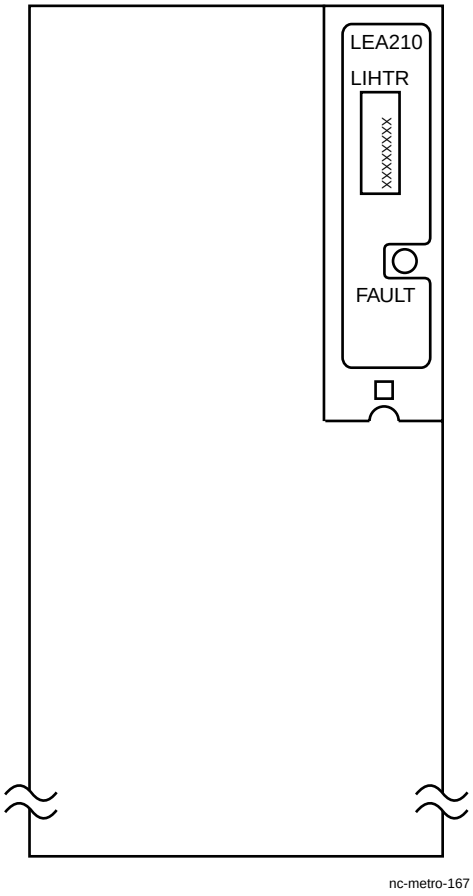

The following figure shows an overall block diagram of an LIHTR circuit pack.

Figure 4-36 LIHTR (LEA210) Circuit Pack Block Diagram

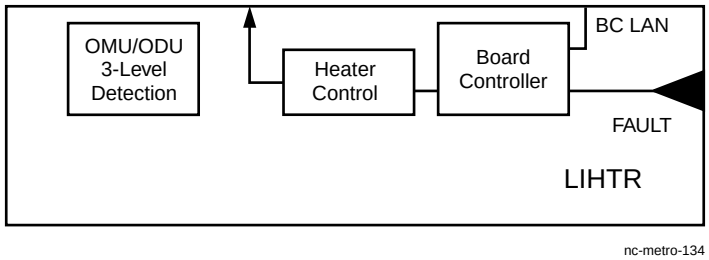

Important! The LIHTR may only be used with 32-channel optical amplifiers as long as an OMU32/ODU32 is also used.

UBB Optical Translator Port Module Unit (OTPM)

The Release 8.2 Universal Broadband OTPM (OTPM UBB) circuit pack is a half-sized module. There are thirty-two add OTPMs (47A1-32) for multi-mode input to support the full 32-channel capacity of the system and an OTPM 47B for the drop function.

The following figure shows the faceplate of a UBB circuit pack.

Figure 4-37 UBB Circuit Pack Faceplate

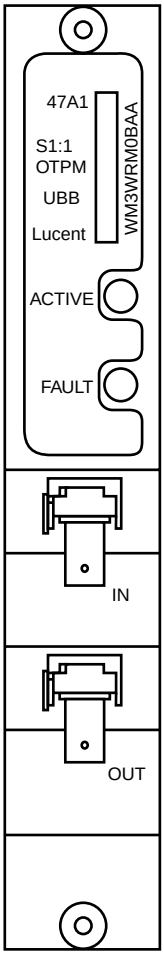

nc-metro-142

The UBB circuit pack can transport any data protocol in the optical signal range between 16 Mb/s and 2.5Gb/s. The OTPM UBB dispersion is at 6200 ps/nm. Total distance supported is 360 km over SSMF. The OTPM UBB will support 1310 nm interfaces only.

> **Important!** If the bit-rate is not provisioned, the UBB feature will transport the bit-rate it receives, between 50 Mb/s and 2.5 Gb/s. For bit rates between 16 Mb/s and 50 Mb/s, the UBB will transport the signal but only if it is provisioned.

The OTPM UBB control structure provides the following functionality:

- Software download from the SYSCTL/SYSMEM to the OTCTL and through the OTCTL to the QOTUUB 41U
- Equipment failure indications for OTPMs
- Incoming signal failure indications (LOS, LOF, and AIS) for OTPM ports
- 8-bit/10-bit performance monitoring for each OTPM UBB port
- Optical parameter performance monitoring (LBFC/OPT, RCV PWR/OPR, LBC) for the OTPMs
- Autonomous TL1 alarm reporting for all OTPM equipment
- Autonomous TL1 alarm reporting for OTPM incoming signal conditions, including the T-x condition types for TCAs
- Incoming signal port state provisioning for all OTPM ports
- In-service indications (green LED) for OTPM ports.
- Alarm notification on add OTPM UBBs (47A1-32) when the received data rate does not match the provisioned data rate

This information is reported through the Metropolis® EON user interface.

The OTPM UBB circuit pack module reshapes, retimes, and regenerates (3R) the signal. This circuit pack regenerates an incoming optical signal in the 16 Mb/s to 2.5 Gb/s range by:

- Converting the signal from optical to electrical format
- Converting the signal back into an optical signal that is compatible with Metropolis® EON or a receiver of the optical channel source
- Monitoring the signal for degradation.

The following table shows the range of signals transported by the UBB and indicates whether or not the performance monitoring (PM) type is 8B/10B.

Table 4-5 UBB Signals and Signal Degrade (SD) Detection

Category	Signal	Signal Data Rate	PM Type
IBM Mainframe	ETR (External Timing Request)	16 Mb/s	None
	CLO (Control Link Oscillator)	16 Mb/s	None
	ESCON™ (Enterprise System Connection)	200 Mb/s	None
	ISC-3 (Inter-system Channel) peer mode	2.13 Gb/s	None
	FICON™ (Fiber Connection)	1.062 Gb/s	8B/10B
Gigabit Ethernet (GbE)	100BaseFx	1.25 Mb/s	None
	1000BaseLx	1.25 Gb/s	8B/10B
FDDI	FDDI (Fiber Distributed Data Interface)	125 Mb/s	None
Fiber Channel (FC)	FC-12	133 Mb/s	8B/10B
	FC-25	266 Mb/s	8B/10B
	FC-50	531 Mb/s	8B/10B
	FC-100	1.062 Gb/s	8B/10B
Video	D1 Video	270 Mb/s	None
	DV6000 Video	2.38 Gb/s	None
Concatenated SONET/SDH	OC-3/STM-1C	155.52 Mb/s	None
	OC-12/STM-4C	622.08 Mb/s	None
	OC-48C/STM-16C	2.5 Gb/s	None
Unknown	(The default is "Hunt and Lock".)	50 Mb/s - 2.5 Gb/s	None

Signals with 8B/10B encoding will switch on SD when configured with OUPSR. Signals without 8B/10B encoding will switch on LOS only. If the specific bit-rate is provisioned, a discrepancy between the provisioned rate and the incoming rate is identified in an alarm with user-provisionable severity. If the bit-rate is not provisioned, the UBB feature will transport the bit-rate it receives, between 50 Mb/s and 2.5 Gb/s. For bit rates between 16 Mb/s and 50 Mb/s, the UBB will transport the signal but only if it is provisioned.

The following figure shows an overall block diagram of a UBB circuit pack.

Figure 4-38 UBB Circuit Pack Block Diagram

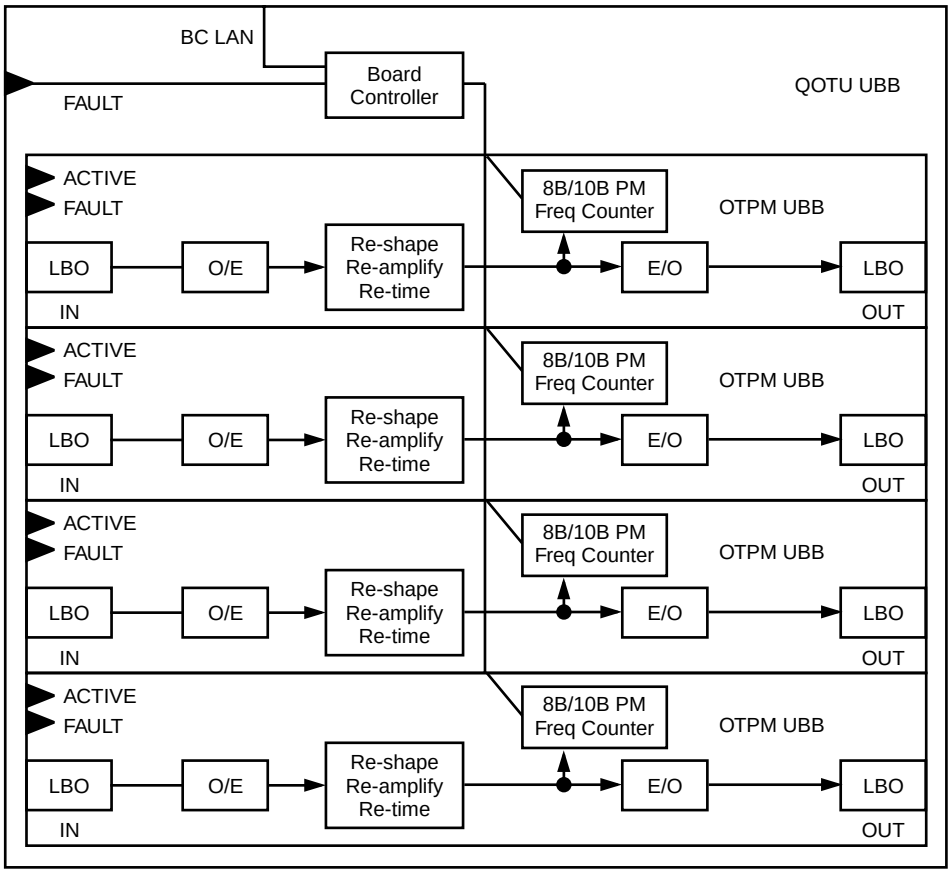

O = Optical
E = Electrical
PM = Performance Monitoring

nc-metro-095

2:1 Data Multiplexer OTU (2DM25)

The Release 8.2 2:1 data multiplexer OTU (2DM25, code: 41M(1-32)) multiplexes two signals of any of the following types into a single OC-48 signal:

- Gigabit Ethernet
- ESCON
- Fiber Channel
- FICON
- Inter-System Channel (ISC-2)

The 2DM25 also demultiplexes the OC-48/STM-16 signal back into the two signal types. In other words the circuit pack is bidirectional. The services are transported in native mode. If regeneration is required, the OTPM25 may be used.

The 2DM25 muxing OTU performs performance monitoring checks using 8B/10B encoding for all four bit rates. In addition, the created OC-48/STM-16 signal is monitored by reading and reporting J0 and B1 bytes.

The following figure shows the faceplate of a full-size 2DM25 circuit pack.

Figure 4-39 2DM25 Circuit Pack Faceplate

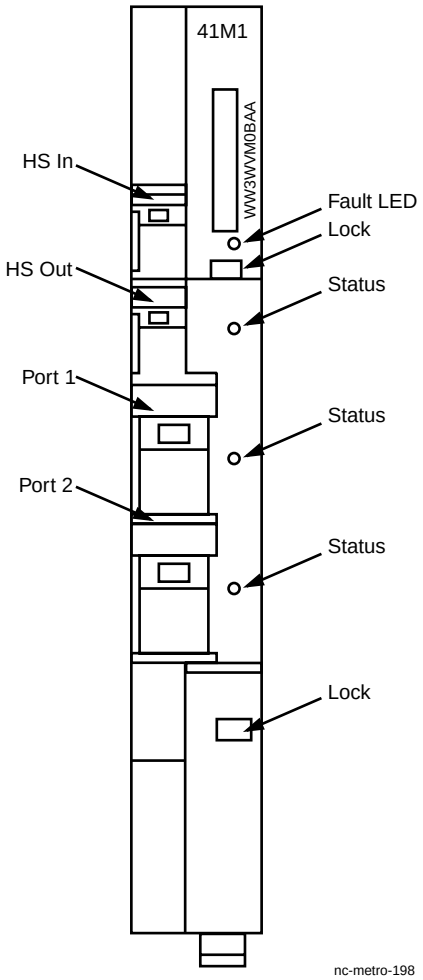

The following figure shows an overall block diagram of a 2DM25 circuit pack.

Figure 4-40 2DM25 Circuit Pack Block Diagram

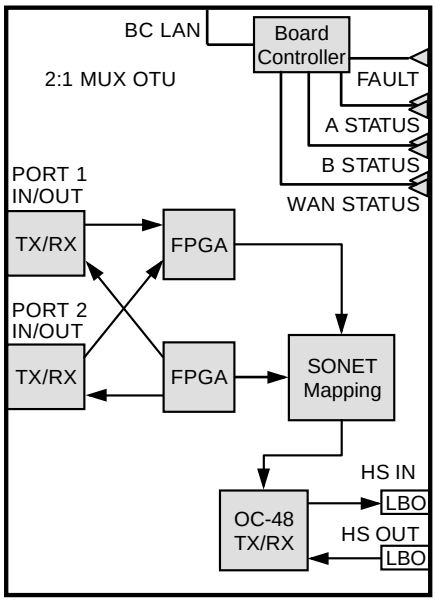

The muxing OTU requires a small form factor plug-in (SFP) module (see the following figure) which is to be plugged in to receive the client input signal. SFPs are new in Release 8.2. See Chapter 7 for SFP module ordering information.

Figure 4-41 Small Form Factor Plug-in (SFP) Module

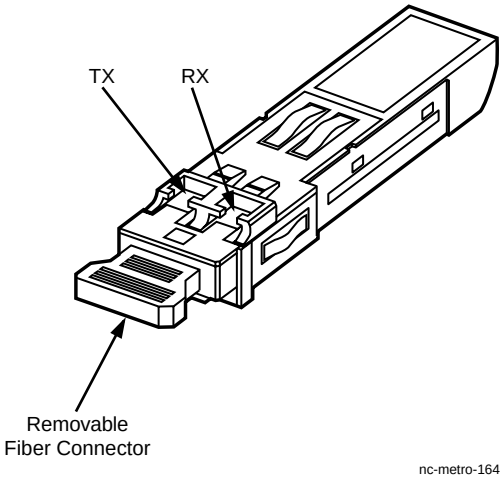

Enhanced LSBB Circuit Pack

Release 8.2 introduces the Enhanced Low Speed Broadband (ELSBB) circuit pack. The Enhanced LSBB is a Metropolis EON Optical Translator Port Module (OTPM, 44C1-16, and 44BC). Like other EON Optical Translator Unit (OTU), it performs signal optical/electrical conversion. Performance monitoring is limited to optical parameters, including LOS; however, it does not retime the signal (2R). The ELSBB supports equipment version information, software download through the system control architecture, equipment failure indications, incoming signal failure indications, autonomous TL1 alarm reporting, port provisioning and in-service indications.

The ELSBB supports 16 channels and can transport signals with data rates from 16 Mb/s to 1.062 Gb/s. It also supports the 1.062 Gb/s ISC2 (Inter-System Coupling) with Open Fiber Control (OFC), an IBM proprietary feature which is a safety interlock to ensure the transmitting laser is turned on only when the optical link is not open.The ELSBB may be provisioned for 4 rates: ETR/CLO, HI (highband), LO (lowband), and ISC. The ELSBB is a half-sized OTPM and is mounted in the pre-release 8.0 QOTU (41S).

The following figure shows the faceplate of an ELSBB circuit pack.

Figure 4-42 ELSBB Circuit Pack Faceplate

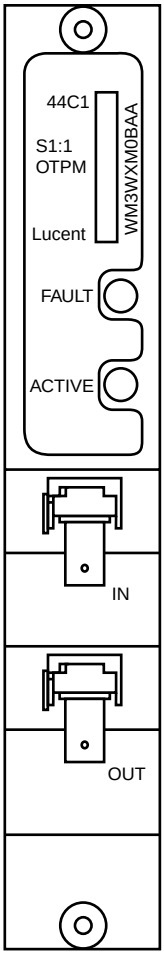

nc-metro-160

The following figure shows a functional block diagram of the ELSBB circuit pack.

Figure 4-43 ELSBB BLock Diagram

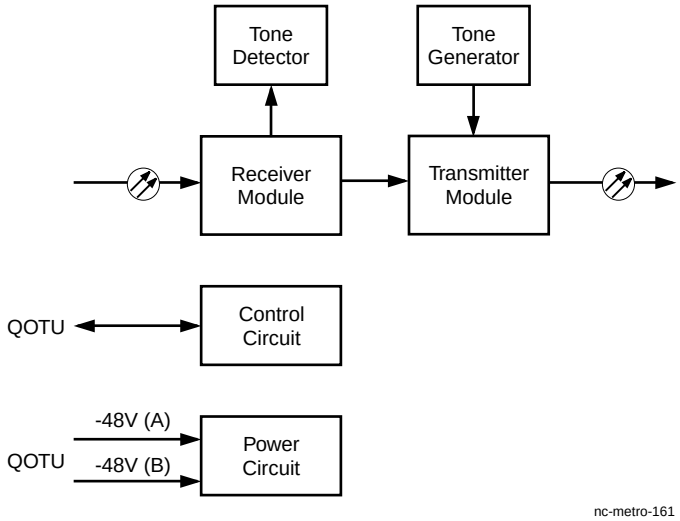

10Gb/s Optical Translator Unit (10G OTU)

Release 8.2 introduces 10 Gb/s transmission through the new 10G OTU circuit pack. The transmitter signal is provisionable as an OC-192/STM-64 signal with forward error correction (FEC) or an OCh10G signal with strong FEC.

The following figure shows the faceplate of a 10G OTU circuit pack.

Figure 4-44 10 Gb/s OTU Circuit Pack Faceplate

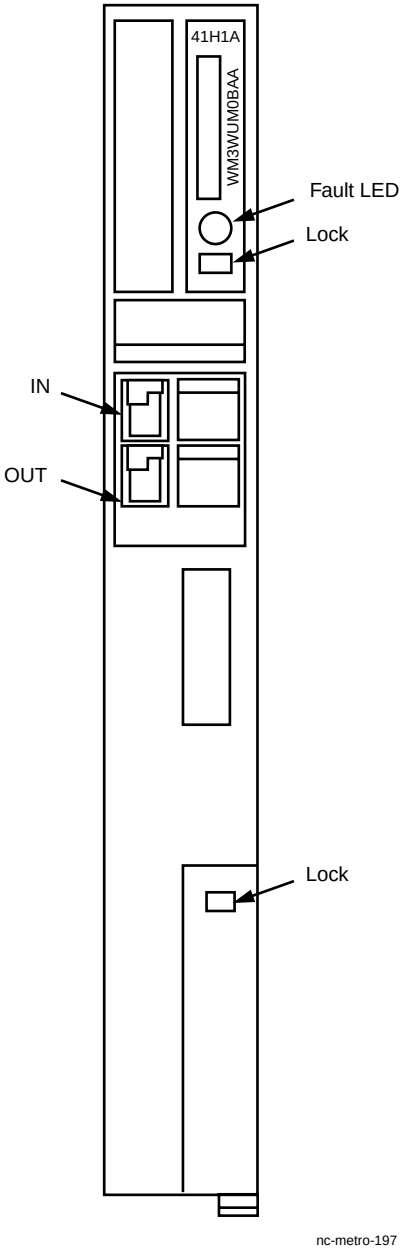

Strong FEC is accomplished by adding digital overhead that contains the FEC check bytes and the optical channel overhead (Och-OH), and transporting the resulting signal at a rate 15/14 times the OC-192 rate (approximately 10.6 Gb/s). The combination of the FEC and OCh-OH is known as the WaveWrapper™ or “digital wrapper”. This OCh-OH enables new maintenance functions that do not rely on SONET/SDH processing such as signaling channels and maintenance signals for OCh shared protections rings and optical channel trace. Strong FEC enables high-speed transmission more reliably and over longer distances.

The 10G OTU includes the following characteristics:

- Receives a standard OC-192/STM-64 or OCh 10G optical signal
- Monitors the SONET section B1 overhead bytes
- Reads the SONET section trace bytes (J0)
- Uses a byte processor FEC 10G for health and performance monitoring and forward error correction (FEC) processing
- The FEC10G has four modes of operation: OC-192 in and out, OC-192 in and OCh10G out, OCh10G in and OC-192 out, and OCh10G in and out
- Combines a wavelength specific tone signal with the STS-192 signal
- Modulates a laser transmitter to produce an OC-192/STM-64 or OCh10G optical signal at a specific frequency
- Provides performance monitoring data to the software
- Reports to the Optical Translator Controller (OTCTL) circuit pack using the board controller local area network (BCLAN)

The following figure shows an overall block diagram of a 10G OTU circuit pack.

Figure 4-45 10G OTU Block Diagram

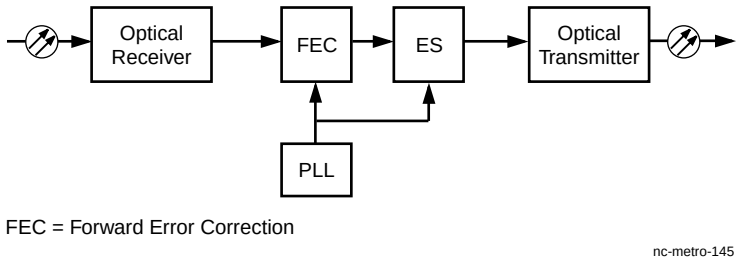

The following figure shows the transmission of 10G signals.

Figure 4-46 Transmission of 10G Signals

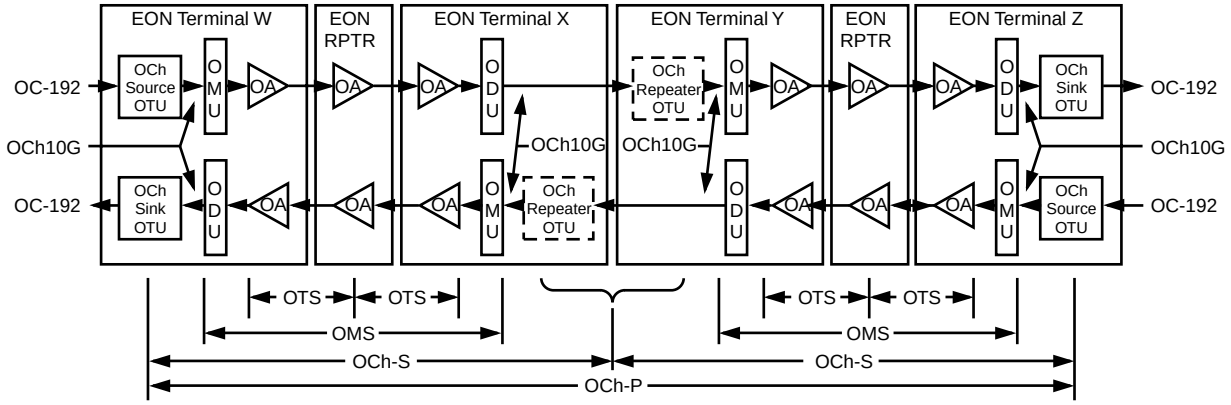

OCh = Overhead Channel
OCh-P = OCh Section
OCh-P = OCh Path
OMS = Optical Multiplex
OTS = Optical Transmission Section
EON = Metropolis® Enhanced Optical Networking (EON)

nc-metro-146

Optical Translator Port Module Unit 25 (OTPM25)

The OTPM25 circuit pack is a half-size module that allows twice the add/drop capacity in the same space as the original 41x OTUs. As of Release 8.2 there are thirty-two OTPM25s 46A1-32x to support the full 32-channel capacity of the system and an OTPM25 46B for the drop function. The OTPM dispersion is at 6200 ps/nm. Total distance supported is 360 km.

The OTPM 25 circuit pack module regenerates an OC-48/STM-16 optical signal by:

- Converting the signal from optical to electrical format
- Converting the signal back into an optical signal that is compatible with Metropolis® EON or a receiver of the optical channel source
- Monitoring the signal for degradation.

The OTPM 25 control structure provides the following functionality:

- Equipment version information per OTPM 25
- Software download from the SYSCTL/SYSMEM to the OTCTL and through the OTCTL to the QOTU 41T
- Equipment failure indications for OTPMs
- Incoming signal failure indications (LOS, LOF, and AIS) for OTPM ports
- B1/J0 performance monitoring in 15 minute/daily bins and TCAs for each OTPM port
- Optical parameter performance monitoring (LBFC/OPT, RCV PWR/OPR, LBC) for the OTPMs
- Autonomous TL1 alarm reporting for all OTPM equipment
- Autonomous TL1 alarm reporting for OTPM incoming signal conditions, including the T-x condition types for TCAs
- Incoming signal port state provisioning for all OTPM ports
- In-service indications (green LED) for OTPM ports.

This information is reported through the Metropolis® EON user interface.

The following figure shows an overall block diagram of a OTPM 25 circuit pack.

Figure 4-47 OTPM 25 Circuit Pack Block Diagram

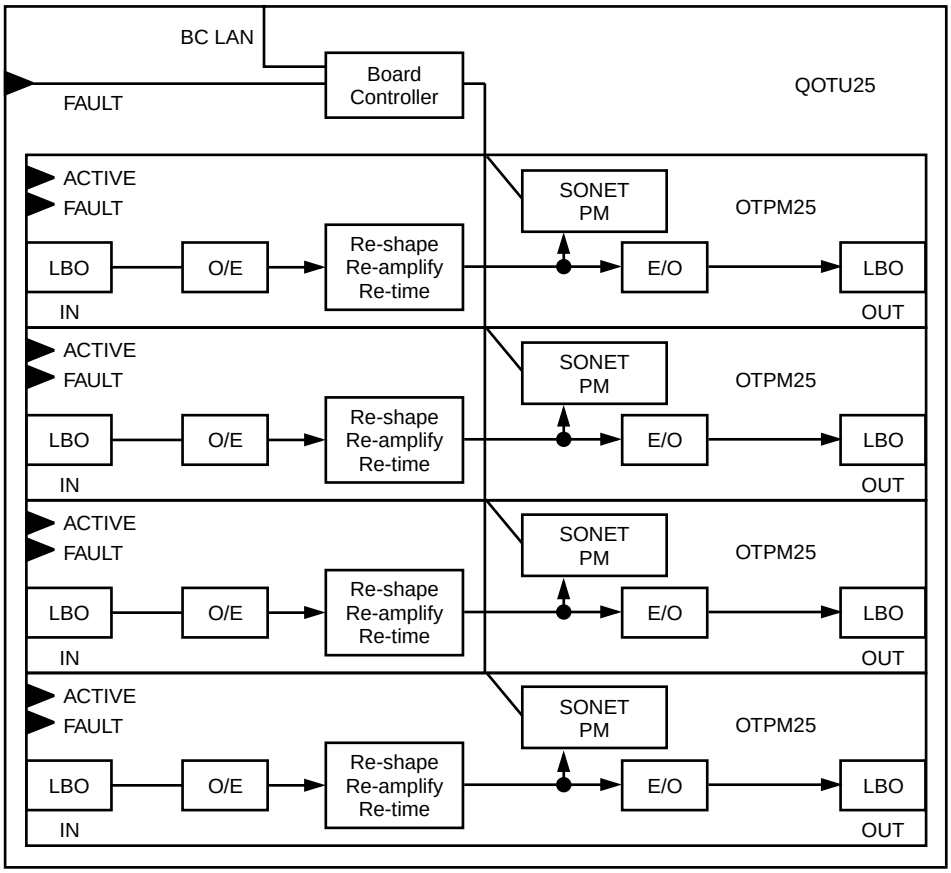

O = Optical
E = Electrical
PM = Performance Monitoring

nc-metro-096

Important! These OTPM 25s may be used with a 16-channel optical amplifier; however, R8.0 software and OT shelves are required.

Optical Unidirectional Path-switched Ring (OUPSR)

The R8.0 and R8.2 OUPSR circuit packs (LEP2 and LEP3, respectively) each consist of a head-end splitter and tail-end selector to perform a per wavelength switch function. The LEP2 accepts single-mode inputs from the client; the LEP3 accepts multi-mode inputs.

Figure 4-48 OUPSR (LEP2 and LEP3)

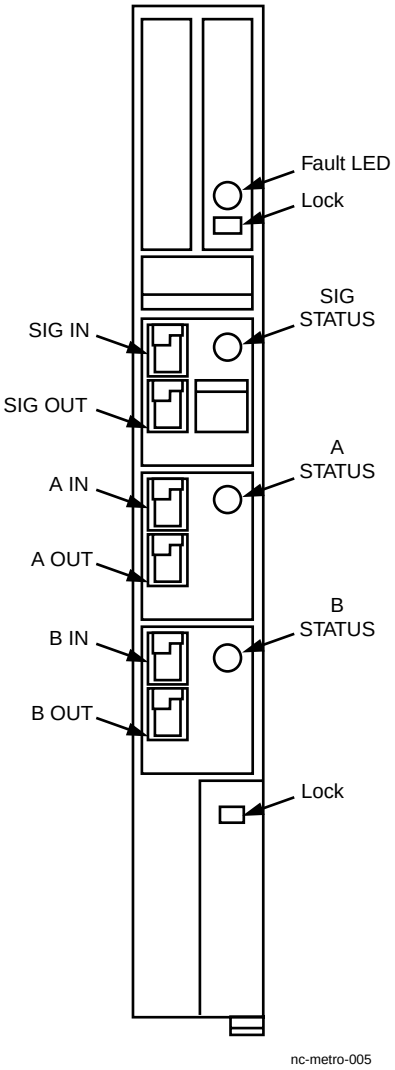

On the transmitting side, the OUPSR takes an unprotected client service, splits it into two signals and transmits the individual signals through the east side and west side of a Metropolis® EON ring system. On the receiving side, the OUPSR circuit pack receives two separate signals from two different OTU packs and determines which signal to choose depending on the quality of the signals. The OUPSR would be placed in a Metropolis® EON ring at those locations where the customer wishes to add or drop traffic.

The selection of the signal that is chosen on the receiving side may also be based on external commands entered manually via the Craft Interface Terminal (CIT). The forced or manual switch to protection via the CIT causes traffic to be switched to the designated side regardless of which side is currently active. The automatic switch causes traffic to be switched to the other side unless the other side has a higher priority switch request that is active. The total time to complete the protection switch once the decision to switch has been made is no more than 50 ms, and the detection time for signal failure or interruption is less than 10 ms.

SIG IN and *SIG OUT* carry the client signal. At the transmit end, the add OUPSR pack splits the *SIG IN* signal into *A OUT* and *B OUT* signals. By default, *A OUT* is considered the working signal and *B OUT* is considered the protection signal. The working signal is added through an add OTU to travel in one direction around the ring and the protection signal is added through an add OTU to travel in the other direction around the ring. At the receive end, the working and protection signals are dropped through drop OTUs to the drop OUPSR pack. The OUPSR selects the working signal if it is good, otherwise it selects the protection signal.

OTU options

In Release 8.2 the OUPSR switching is based on signal degrade (SD), when used with two drop OTUs that detect SD (see the following table). The OUPSR switches on LOS, not SD, if equipped with either: two OTUs that do not detect SD or with only one drop OTU. Note that the ETR/CLO signal may not be optically protected. Also, OUPSR does not support LSBB (44AxB) and ELSBB (44Cx) in 16-channel systems.

Table 4-6 Drop OTUs that Detect Signal Degrade (SD)

OTU	Bit Rate
41BB	OC-48/STM-16
47B	See Table 4-5.
46B	OC-48/STM-16
41M	FICON, Fiber Channel, ESCON, GbE, and OC-48/STM-16

OTUs can be used with OUPSRs in the following ways:

- *with protected OTUs (four OTUs per office)*

  This option supports switching on signal degrade (SD), alarm indication signal (AIS), and loss of frame (LOF). It also protects against a single OTU failure for both the add and drop signals.

- *with protected drop (unprotected add) OTUs (three OTUs per office)*

  This option supports switching on signal degrade (SD), alarm indication signal (AIS), and loss of frame (LOF). It also protects against a single OTU failure for the drop signal but not for the add signal.

- *two OTUs per office*

  This option supports switching on LOS only. This option does not support switching on signal degrade (SD). It also does not protect against an OTU failure. The LEP3 will not be used in this configuration.

OTU options illustrated The following figure illustrates the three OTU options.

Figure 4-49 Four, Three, or Two OTUs per Office

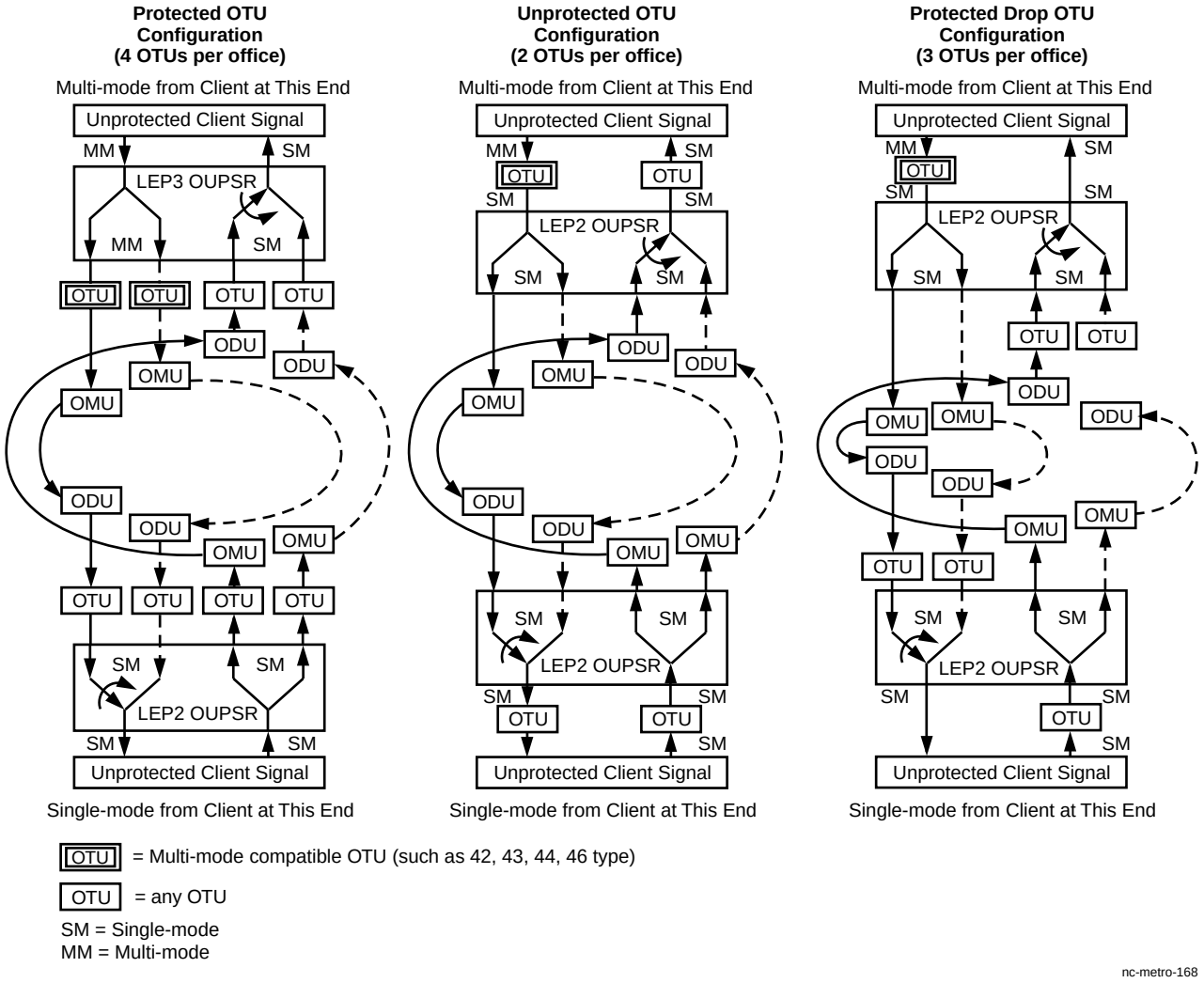

The following figure shows an overall block diagram of an OUPSR circuit pack.

Figure 4-50 OUPSR (LEP2 and LEP3) Circuit Pack Block Diagram

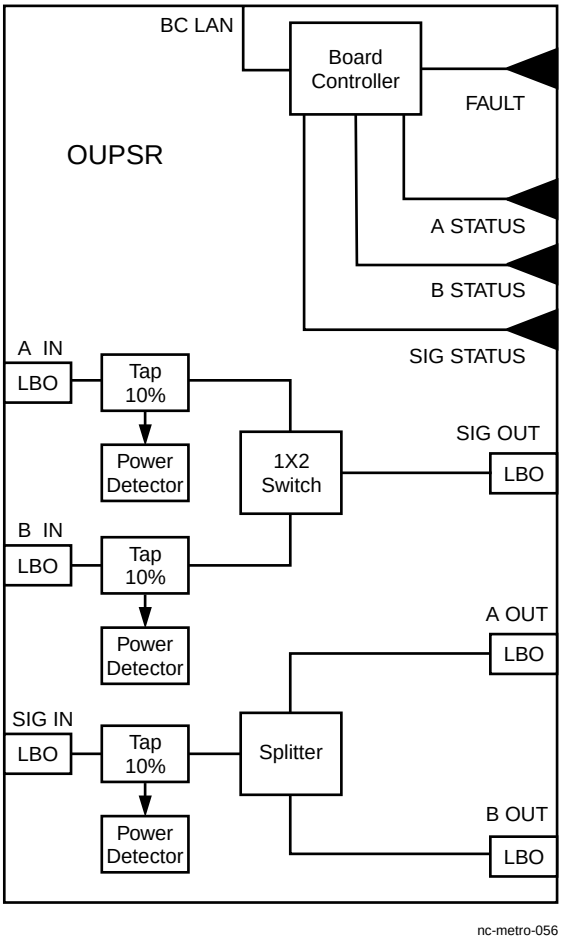

QOTUUB Carrier

Release 8.2 introduces the Quad Optical Translator Unit (QOTU) (41U) Universal Broadband (UBB) also known as the QOTUUB carrier. Each QUOTUBB (Universal Broadband) circuit pack occupies two OTU slots in an OT shelf and can contain a maximum of four OTPM UBBs in any combination with the capability of transmitting from 16 Mb/s to 2.5 Gb/s. The 47Ax series of OTPM UBB circuit packs are used.

OTPM UBB and DUBBs (add and drop Universal Broadband) are housed individually in the QOTUUB ports 1, 2, 3, and 4. The following figure illustrates the port locations on the QOTUUB.

Figure 4-51 QOTUUB Design

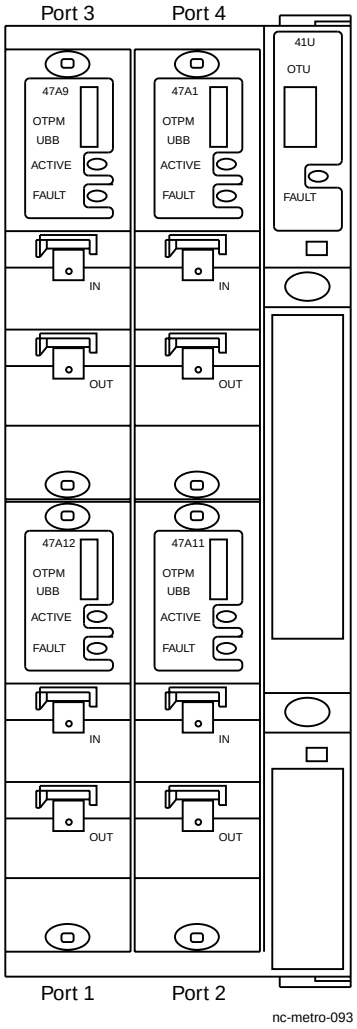

Quad Optical Translator Unit (QOTU25) Carrier for 2.5G Signals

The Release 8.0 QOTU25 carrier circuit pack (41T) occupies two OTU slots in an OT shelf and can contain a maximum of four OC-48/STM-16 OTPM25s in any combination. The 46Ax series of QOTU25 circuit packs are used. OTPM25s are housed individually in QOTU25 ports 1, 2, 3, and 4. The following figure illustrates the port locations on the QOTU25.

Figure 4-52 QOTU25 Design

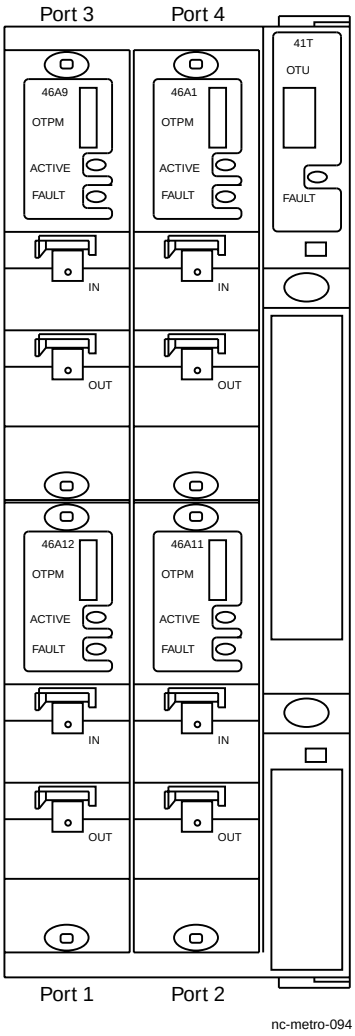

Pre-release 8.0 OTUs

The following lists the pre-release 8 Optical Translator Unit (OTU) transmission circuit packs used in the Metropolis® EON:

- 41F1 through 41F16 1.25 Gigabit Ethernet Optical Translator Unit (Add) - 1.5µm
- 41G 1.25 Gigabit Ethernet Optical Translator Unit (Drop) - 1.3µm
- 41A1C through 41A16C OC-48/STM-16 Optical Translator Unit - 1.5µm
- 41BB OC-48 STM16 Optical Translator Unit - 1.3µm
- 41C1C through 41C16C OC-48/STM-16 Optical Translator Unit - 1.5µm
- 42A1B through 42A16B OC-12/STM-4 Optical Translator Port Module - 1.5µm
- 42B, OC-12/STM-4 Optical Translator Port Module - 1.3µm
- 43A1B through 43A16B OC-3/STM-1 Optical Translator Port Module - 1.5µm
- 43B, OC-3/STM-1 Optical Translator Port Module - 1.3µm.
- Quad Optical Translator Unit (QOTU)

All circuit pack, unit, and port module assemblies connect to the backplane. All optical connections in and out of the circuit packs run through faceplate-mounted optical connectors.

Optical Translator Unit (OTU/OTPM)

The OTU/OTPM circuit pack regenerates an OC-3/STM-1, OC-12/STM-4 or OC-48/STM-16 optical signal by:

- Converting the signal from optical to electrical format
- Converting the signal back into an optical signal that is compatible with Metropolis® EON or a receiver of the optical channel source
- Monitoring the signal for degradation.

The OTU/OTPM control structure provides the following functionality:

- Equipment version information per QOTU and OTPM (OC-3/STM-1, OC-12/STM-4, OC-48/STM-16.
- Software download from the SYSCTL/SYSMEM to the OTCTL and through the OTCTL to the OTUs and QOTUs
- Equipment failure indications for OTUs, QOTUs, and OTPMs
- Incoming signal failure indications (LOS, LOF, and AIS) for OTU and OTPM ports
- B1 and J0 performance monitoring in 15 minute/daily bins and TCAs for each OTU and OTPM port (this is not provided for the LSBB OTPM)
- Optical parameter performance monitoring (LBFC/OPT, RCV PWR/OPR, LBC) for the OC-48/STM-16 OTUs. For OC-3/STM-1 and OC-12/STM-4 OTPMs, analog performance parameters are not provided (available for factory testing and calibration) and all out-of-range indications are treated as OTPM failures.
- Autonomous TL1 alarm reporting for all OTU, QOTU, and OTPM equipment
- Autonomous TL1 alarm reporting for QOTU and OTPM incoming signal conditions, including the T-x condition types for TCAs
- Incoming signal port state provisioning for all OTU and OTPM ports
- In-service indications (green LED) for OTPM ports.

This information is reported through the Metropolis® EON user interface. For more detailed information regarding OC-3/STM-1, previous OC-48/STM-16 and OC-12/STM-4 refer to pre-R8.0 APOGs.

Important! Pre-release 8 OTUs can all be used in a 32-channel system.

□

Quad Optical Translator Unit (QOTU) Carrier

Each QOTU carrier circuit pack (41S) occupies two OTU slots in an OT shelf, and contains a maximum of four OC-3/STM-1, OC-12/STM-4, or 16 Mb/s -1.06 Gb/s OTPMs in any combination. The 42x, 43x, and 44X series of QOTU circuit packs are used.

OTPMs are housed individually in QOTU ports 1, 2, 3, and 4. The following figure illustrates the port locations on the QOTU.

Figure 4-53 QOTU Design

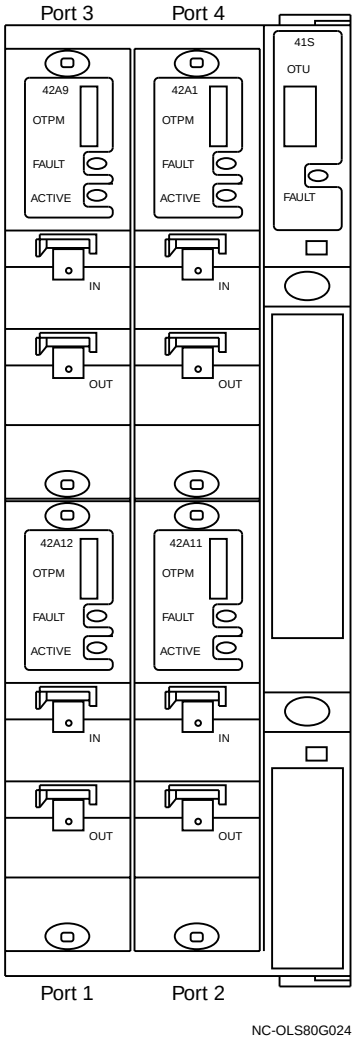

Introduction

This section describes the interconnection panels and both the fuse and user panels associated with Metropolis® EON shelves (including OT).

Metropolis® EON Interconnection Panel

At the top of Metropolis® EON shelf, there is a built-in interconnection panel (see the following figure) that is used for OAM&P connections. Each shelf's backplane provides intrashelf interconnection between all circuit packs used in the shelf. The backplane also provides interconnection from the OAM&P interconnectors at the top of the shelf to the various circuit pack connector pins. All access to connections is from the front of the shelf, and a CIT access port is available for the interconnection panel. See the *Metropolis®* Enhanced Optical Networking (EON) *Installation Guide* for more information.

Figure 4-54 Metropolis® EON Shelf Interconnection Panel

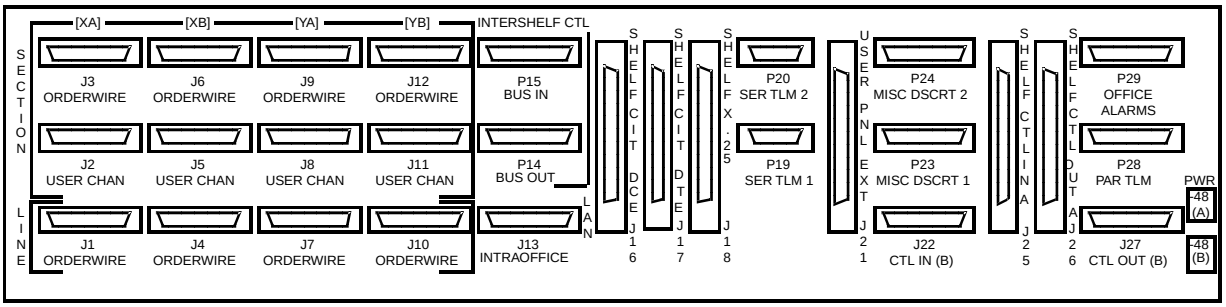

NC-OLS80G150

OT Interconnection Panel (System Controller Shelf)

The following figure depicts an interconnection panel of OT System Controller Shelf as seen from the front of the shelf. Associated cable groups and their connection points are indicated.

Figure 4-55 OT System Controller Shelf Interconnection Panel and Cabling

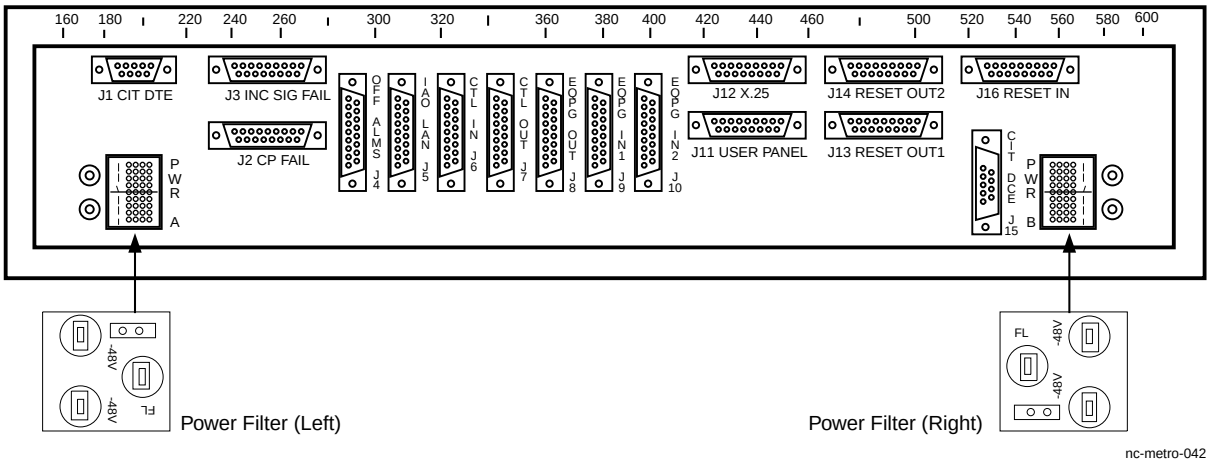

nc-metro-042

OT Interconnection Panel (Complementary Shelves)

The following figure depicts an OT Complementary Shelf interconnection panel as seen from the front of the shelf. Associated cable groups and their connection points are indicated.

Figure 4-56 OT Complementary Shelf Interconnection Panel and Cabling

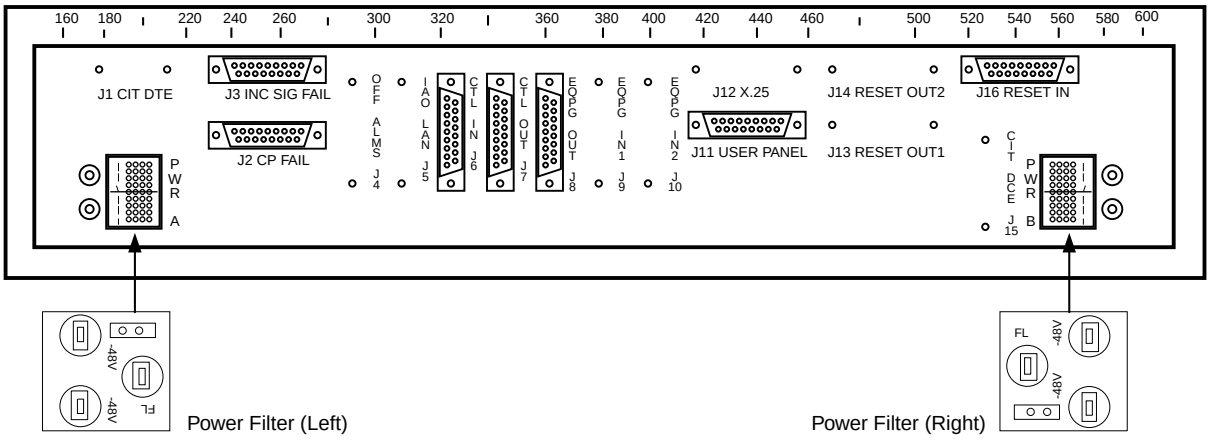

nc-metro-043

Metropolis® EON User and Fuse Panels

This section provides information on user, fuse, and power indicating panels for Metropolis® EON.

Metropolis® EON User Panels

The following figure shows a diagram of the Metropolis® EON SONET user panel.

Figure 4-57 Metropolis® EON SONET User Panel

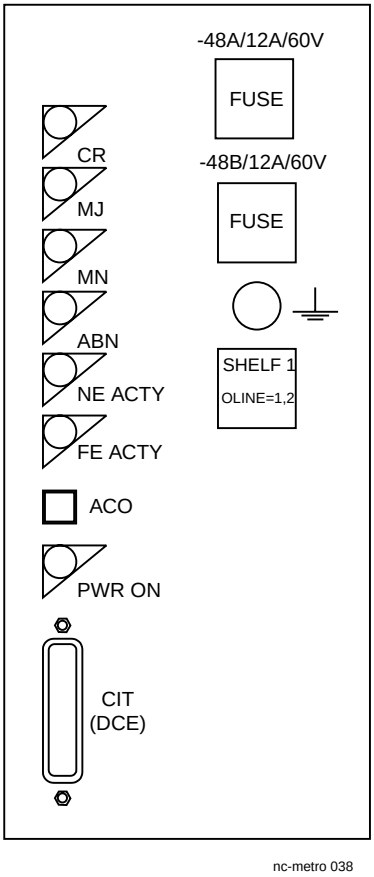

The following table lists all the SONET indicators that appear on the Metropolis® EON SONET user panel. Note that only the green Power On (PWR ON) LED should be active.

Table 4-7 SONET Indicators on Metropolis® EON User Panel

Indicator Name	Abbreviation	Color	Description
Power On	PWR	Green	Indicates the shelf is receiving -48 V power
Critical	CR	Red	Indicates critical active alarm level
Major	MJ	Red	Indicates major active alarm level
Minor	MN	Yellow	Indicates minor active alarm level
Near End Activity	NE ACTY	Yellow	Indicates alarm or status conditions at the local equipment
Far End Activity	FE ACTY	Yellow	Indicates alarm or status conditions at the remote equipment
Alarm Cut-off	ACO	Green	When depressed, silences active audible alarms
Abnormal	ABN	Yellow	Indicates an abnormal condition

The following figure shows a diagram of the Metropolis® EON SDH user panel.

Figure 4-58 Metropolis® EON Shelf SDH User Panel

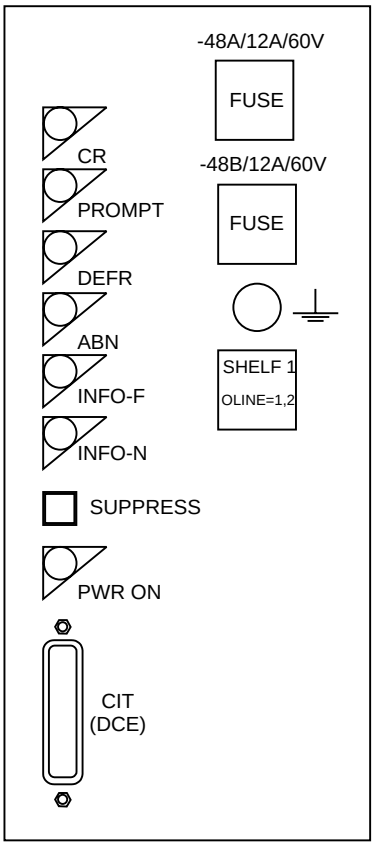

nc-metro-004

The following table lists all the SDH indicators that appear on the Metropolis® EON SDH user panel. Note that only the green Power On (PWR ON) LED should be active.

Table 4-8 SDH Indicators Present on Metropolis® EON User Panel

Indicator Name	Abbreviation	Color	Description
Power On	PWR	Green	Indicates the shelf is receiving -48 V power
Critical	CR	Red	Indicates critical active alarm level
Prompt	PROMPT	Red	Indicates prompt active alarm level
Deferred	DEFR	Yellow	Indicates deferred active alarm level
Info-N	INFO-N	Yellow	Indicates alarm or status conditions at the local equipment
Info-F	INFO-F	Yellow	Indicates alarm or status conditions at the remote equipment
Suppress	SUPPRESS	Green	When depressed, silences active audible alarms
Abnormal	ABN	Yellow	Indicates an abnormal condition

Metropolis® EON Fuse Panel

Metropolis® EON fuse panel, shown in the following figure, displays the fuse indicators for overcurrent protection (A and B feeds) and provides an electrostatic discharge (ESD) jack that is connected to a frame ground.The fuse panel can be replaced in the field

Figure 4-59 Metropolis® EON Fuse Panel

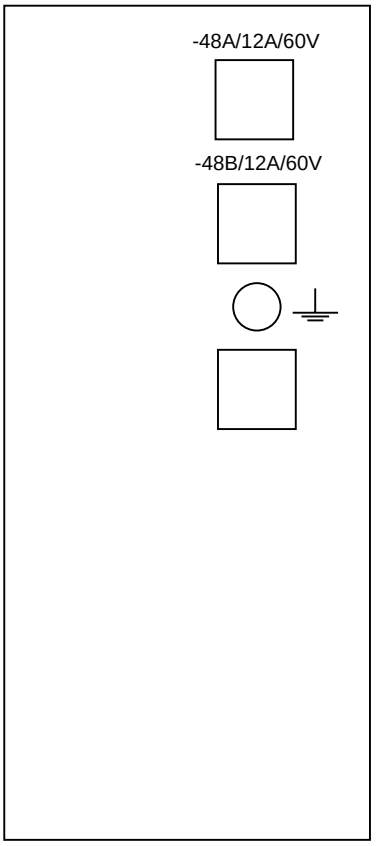

OT Complementary Shelf Fuse/Power Indicating Panel Assembly

Complementary Shelves 1 and 2 are both equipped with a fuse/power indicating panel. Each panel provides the following:

- Fuse indicators for overcurrent protection (A and B feeds)
- One green Power On (PWR ON) LED that lights up to indicate the shelf is receiving -48 V power
- An electrostatic discharge (ESD) jack that is connected to a frame ground.

The following figure shows a diagram of the OT Complementary Shelf fuse/power indicating panel.

Figure 4-60 Miscellaneously-Mounted OT Complementary Shelf Fuse/Power Indicating Panel

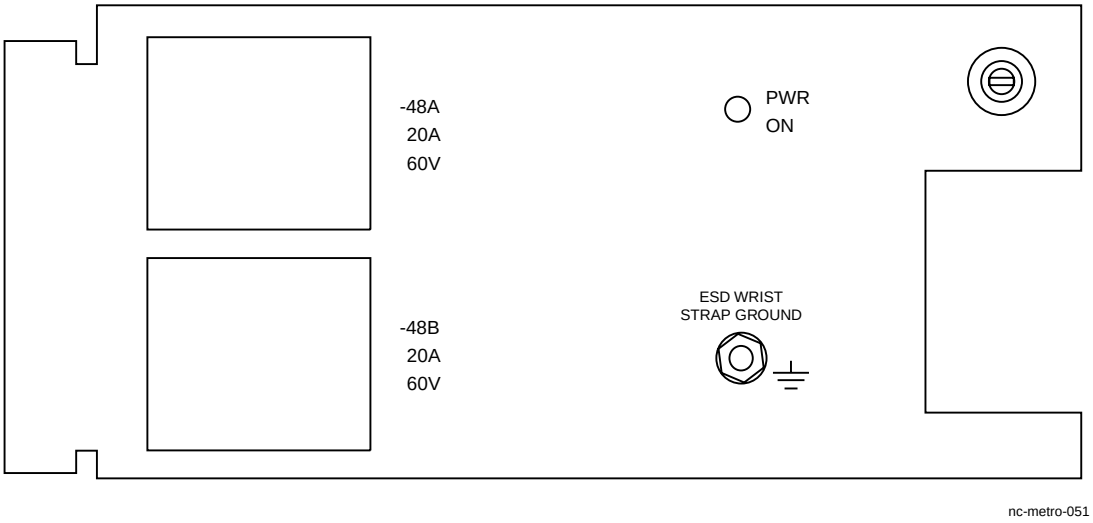

The following table shows Metropolis® EON and OT power specifications.

Table 4-9 Metropolis® EON and OT Power Specifications

Description	Specification
Voltage Range	-42.75 to -60 V DC
Power Feeders	Two -48 V power feeders (“A” and “B”) required
Fuse Size for 16-channel (pre-R8.0 for all shelves)	10 amperes
Fuse Size for 32-channel (R8.0 and greater for the Metropolis® EON shelves)	12 amperes
Fuse Size for 32-channel (R8.0 and greater for the OT shelves)	20 amperes

Low Voltage Cut-off

If a period of low voltage coming into the Metropolis® EON occurs, the system cuts off when a power filter input of -38.5 V DC ± 1 V is detected. The system restarts when a power filter input of -43 V DC ± 1 V is detected.

□

Power

Introduction

This section provides information on Metropolis® EON power distribution.

Power distribution is based on individual rather than bulk power supplies. Each circuit pack contains DC-to-DC converters that change the office battery voltages to the voltages required. This leads to improved system reliability with heat dissipated uniformly across the system, thereby avoiding “hot spots.”

Metropolis® EON is powered by -48 V direct current (DC). Power filtering and fusing are performed on the shelf level. DC-to-DC on-board power converters convert power on individual circuit packs.

Power Cables

The power feed cable uses stranded, color coded, and keyed connectors. All panel-mounted power connector functions are labeled.

The following table shows the color codes used for power cabling.

Table 4-10 Power Cable Color Codes

Description	Color
-48V A	Red
-48V A RTN	Black
-48V B	Slate
-48V B RTN	Slate/Black

Metropolis® EON Power Distribution

Dual -48 V feeders (A and B) provide redundant power to each shelf and fan assembly. All -48 V cables from the battery plant are directly terminated to each shelf. Each branch connects to an overcurrent limiter located on the shelves. The following two figures show the overall power distribution for a three-shelf miscellaneous mount design and an integrated bay design, respectively.

Figure 4-61 Power Distribution in a Three-Shelf Bay Using Miscellaneous Mount Design

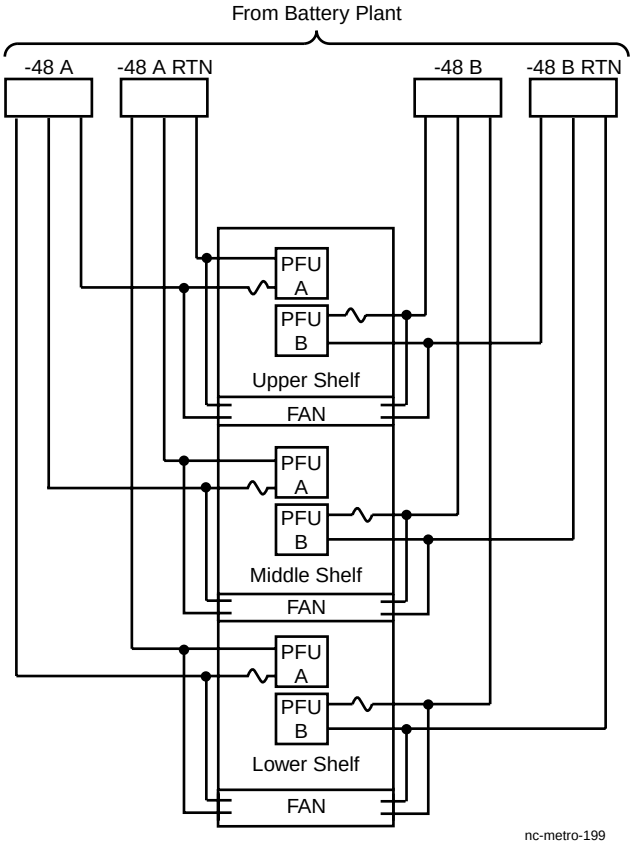

Figure 4-62 Power Distribution for the Release 8.0 Integrated Bay

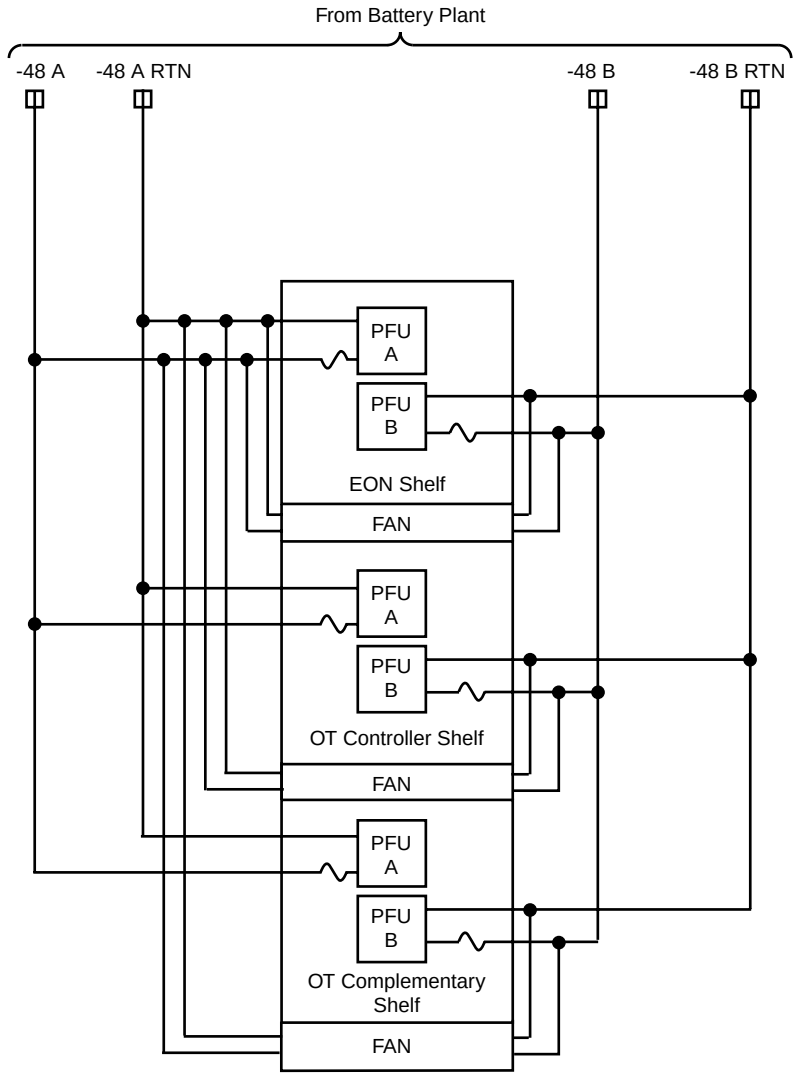

EON = Metropolis® Enhanced Optical Networking (EON)

nc-metro-200

The following figure shows a block diagram of Metropolis® EON power distribution at the shelf level.

Figure 4-63 Metropolis® EON Power Distribution at Shelf Level

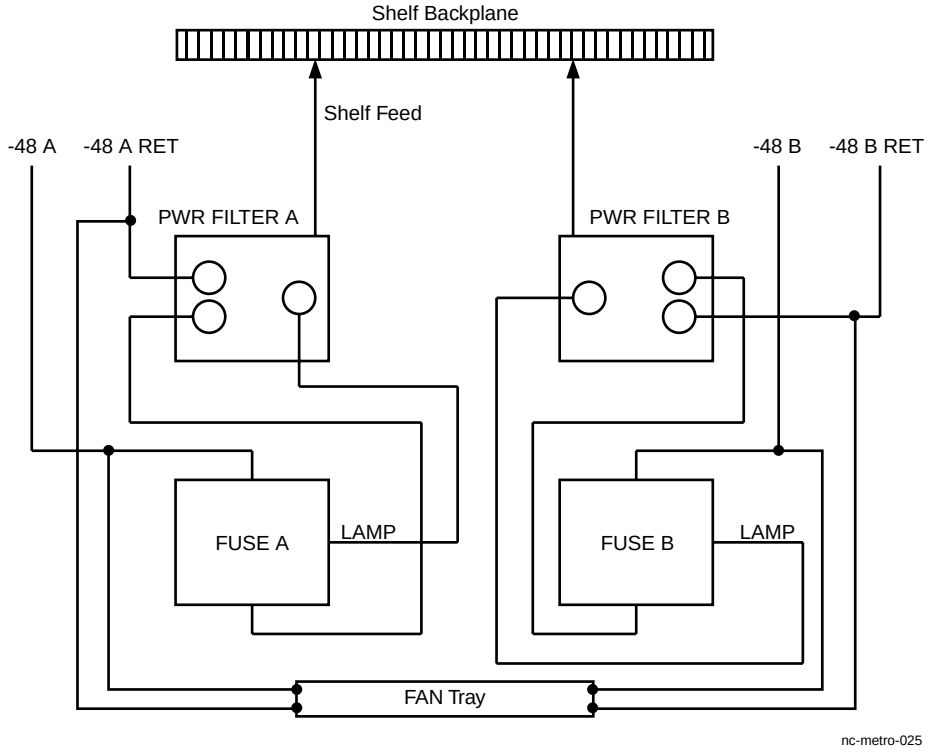

Shelf-Level Filtering

Power filters (one for each feeder) smooth the input current to the shelf. They plug directly into the backplane via a connector. The backplane distributes -48 V power to all the circuit packs by means of a printed power bus that spans the entire width of the panel.

The power filter units also provide a low voltage cutoff feature. This protects the equipment from abnormally low incoming voltage. If the incoming voltage drops below -38.5± 1 V, the power is cut off until the incoming voltage returns to -43± 1V. Metropolis® EON will experience no damage if the power fluctuates between -38.5±1V and -43±1V. If a fuse blows, the fuse cap illuminates to indicate which power feeder has opened.

Backplane and Circuit Pack Interface

All Metropolis® EON (including OTU) circuit packs have identical common battery power and return pins. This avoids catastrophic failure if a pack is plugged into the wrong connector. An active circuit on the circuit packs provides in-rush current protection whenever a circuit pack is inserted and also when circuit packs are equipped and bay power is applied.

Diode ORing, On-Board Fusing, Filtering, and Powering

Each Metropolis® EON circuit pack is equipped with diodes that provide ORing to the two redundant feeds and their return leads as well as a fuse that protects the feeders. Board-mounted fuses are provided on each circuit pack. If one of these board-mounted fuses fails, the circuit pack fails and must be replaced with a new pack. A filtering section follows the fused input, prior to the DC-to-DC conversion. On-board power converters are used for -48V power conversion.

□

Equipment Interconnection Guidelines

Introduction

Metropolis® EON designed as a front access product; all cable and fiber connections can be made from the front of the system. This feature allows planners to design networks with Metropolis® EON in controlled environment vaults, concrete huts, or other locations, where space is limited and equipment must be placed close to the wall.

> **Important!** All external interconnection cabling uses industry standard connectors.

Cabling

The following are major classes of signals cabled to Metropolis® EON:

- Optical channels (drop side signals)
- OAM&P electrical signals
- Customer maintenance (CM) optical signals
- Optical line signals.

Optical interfaces (TLM, ODU, OMU, and OA) are designed to provide connections through a front-mounted connector system. The connector system supports the use of the following four types of connectors which function as both a connector and an LBO:

- ST
- FC
- SC
- LC.

If required, the connector system also provides optical attenuation (optical LBO). All optical interfaces are factory-equipped with ST or SC connectors having 0 dB attenuation. These connectors can be changed and other connector types used.

In addition, a kit with LBO values from 3 to 10 dB is shipped with the ODU. The correct LBO value must be chosen after the system is installed. The sixteen wavelength ODU and OMU require the smaller LC-type connectors due to the higher density of optical connections associated with the sixteen wavelength feature. (For information on ordering LBO kits refer to “How to Order LBOs” in Chapter 7, “Ordering”.)

The following figure shows the build-out block and an ST-type LBO assembly.

Figure 4-64 ST-Type Build-Out Assembly (enlarged)

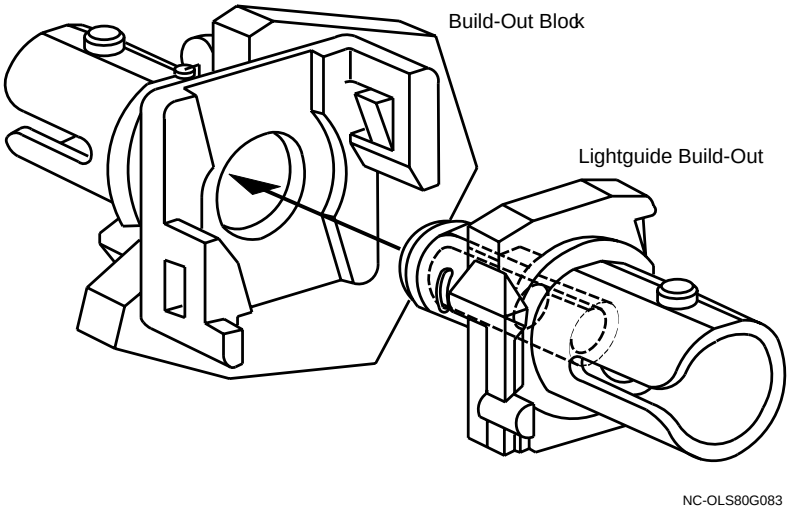

The following figure shows the buildout block and an FC-type LBO assembly.

Figure 4-65 FC-Type Build-Out Assembly (enlarged)

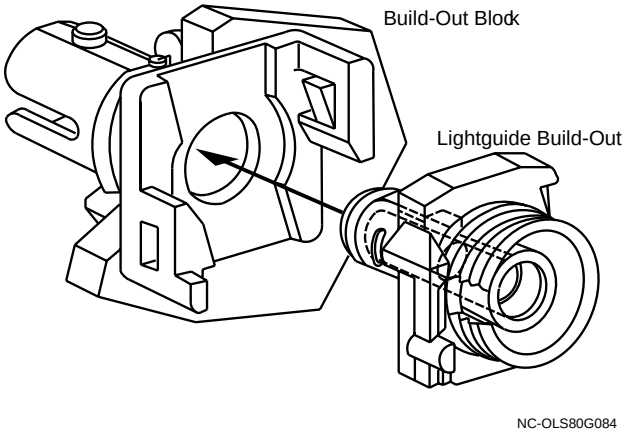

The following figure shows the build-out block and SC-type LBO assembly.

Figure 4-66 SC-Type Build-Out Assembly (enlarged)

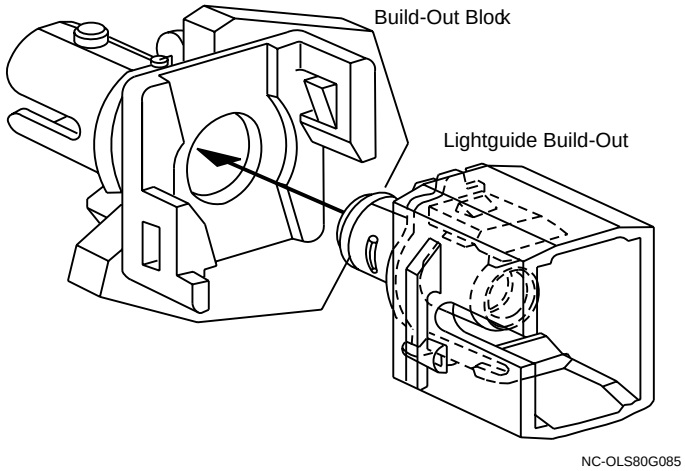

The following figure shows an LC-type connector.

Figure 4-67 LC-Type Connector (enlarged)

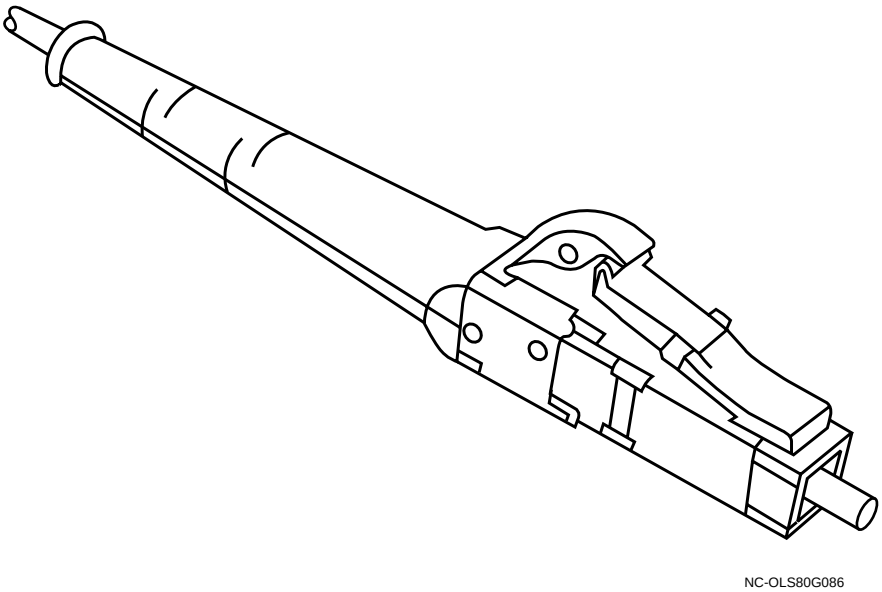

All fiber jumpers connected to the OMU and ODU units must use standard single-mode fiber (SSMF). The intrashelf fiber jumpers and the optical line I/O fiber must use SSMF. Single mode or multi-mode fiber (depending on the type of input source) can be used for the input customer maintenance signal. However, multi-mode fiber must be used for the output customer maintenance signal.

When ST, FC, SC or LC connectors are used together, hybrid jumpers must be used. A hybrid jumper has different types of connectors at either end. The connectors at both ends of the jumper must match the panel-mounted connectors. ST, SC, and FC connectors are available for use with the LBO cross-connect panel and can be installed when Metropolis® EON is installed.

> **Important!** All optical fiber connectors (ST, FC, SC, and LC types) must be cleaned before initial or subsequent connections are made. Refer to “How to Order Labels” in Chapter 7, “Ordering” for information on cleaning materials.

LBO Information

The following figure provides a depiction of LBO usage in an End Terminal. Bolded LBO boxes indicate where LBOs may need to be replaced using the new Release 8.2 Easy Install feature. A lower loss spare LBO is provided with the add OTUs to be used when connecting to an 8 dB insertion loss OMU. LBOs connected to the input of an LIRCV instead of a 32-channel OA do not need to be replaced.

Figure 4-68 LBO Location in an End Terminal

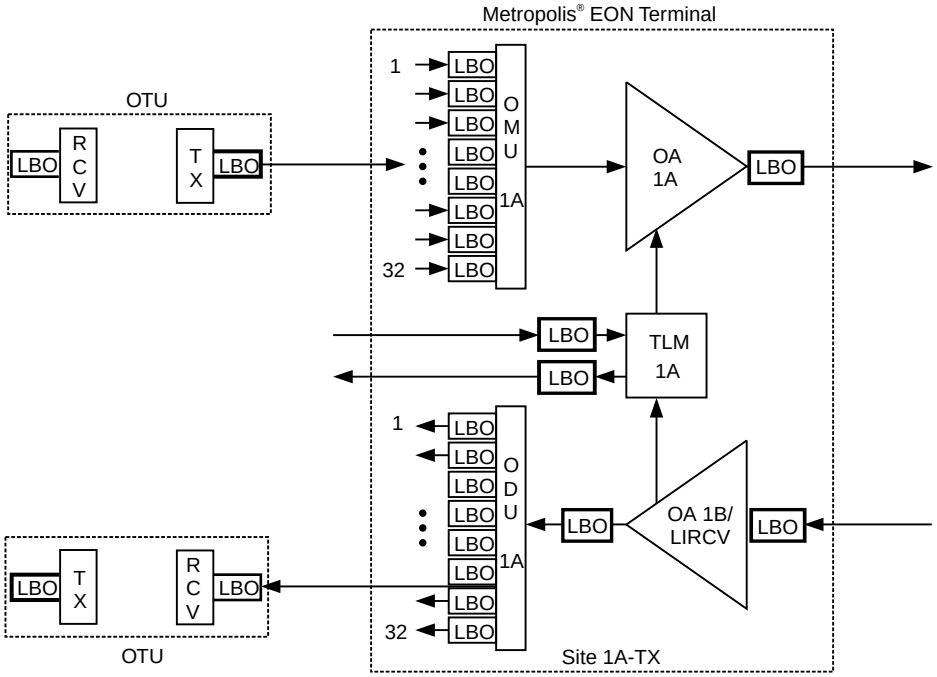

EON = Metropolis® Enhanced Optical Networking (EON)

5 System Planning and Engineering

Overview

Purpose

This chapter summarizes information needed for applications planning before procurement and deployment of Metropolis® EON.

Special Considerations

There are several considerations to keep in mind when planning a network. Projected customer requirements determine the initial capacity needed as well as growth. Where you install the network and how you plan to use it determine the physical installation considerations.

Before ordering or installing the equipment, you need to develop an overall plan and designate a building that will serve as a terminal office or repeater site. This plan should take into consideration the eventual system size and include the following elements:

- Engineering rule conventions
- Floor plan layout
- Equipment interconnection
- Cabling
- Environmental considerations
- Power planning.

Lucent Technologies offers engineering and installation services for planning and installing Metropolis® EON. For more information, Chapter 8, "Product Support".

Contents The following sections are included in this chapter:

Metropolis® EON Engineering Rule Conventions	5-3
Metropolis® EON Engineering Rules for Amplification	5-9
Engineering Rules for OTU Usage	5-22
Engineering Rules for OMU/ODU Usage	5-31
Engineering Rules for Dispersion Compensation	5-32
Optical Power Target Levels	5-38
Release 8.2 Easy Install Feature	5-39
Design for 1.06 Gb/s Traffic Using ELSBB OTU	5-41
Design for OUPSR Applications	5-42
Floor Plan Layout	5-44
Environmental Considerations	5-46
Power Planning	5-47

Metropolis® EON Engineering Rule Conventions

Introduction

This section provides an overview of the term and definition conventions used by the Metropolis® EON engineering rules for Release 8.2 and future releases discussed in this chapter.

Metropolis® EON Network Topologies

The following table shows the applications for the four types of Optical Amplifiers (OAs) used in Release 8.2, in addition to the application for zero-OA.

Table 5-1 Optical Amplifiers used in Metropolis® EON

OA/OA2/OA3 Code	Application	Two-OA	Single-OA	Zero-OA
LEA7B OA	Long Reach Linear	Yes	Yes	n/a
LEA107B OA	Long Span Linear	Yes	No	n/a
LEA207 OA2	Metropolitan Linear and Ring	Yes	Yes	n/a
LEA307 OA3	Regional Linear and Ring	Yes	Yes	n/a
none	Metropolitan	n/a	n/a	Yes

Lightguide Buildouts (LBOs)

If outside plant loss is within the nominal range, no LBOs are required. If any span loss is below the specified minimum limit, an LBO is required. Detailed LBO selection guidelines are provided in the Release 8.2 *Metropolis®* Enhanced Optical Networking (EON), *Installation Guide*.

Engineering Rule Conventions Used for Two-OA Applications

The following table and figure show the term and definition conventions used in this chapter for a two-OA Metropolis® EON application.

Table 5-2 Two-OA Application Metropolis® EON Conventions

Two-OA Term	Defined as used in Metropolis® EON
Outside Plant Loss	Fiber loss in outside plant which covers the section of a system from one building boundary to another
Span Loss measurement	From points MPI-S (Main Path Interface at the Metropolis® EON output after the connector) to R' (optical amplifier input before the connector), from S' (optical amplifier output after the connector) to R', or from S' to MPI-R (Main Path Interface at the Metropolis® EON input before the connector), including any lightguide cross connect (LGX) connectors in the optical path and outside plant loss
OA Loss Budget measurement	From points MPI-S' (Main Path Interface at the Metropolis® EON output before the LBO) to R' (optical amplifier input before the connector), from SB' (optical amplifier output before the LBO) to R', or from SB' to MPI-R (Main Path Interface at the Metropolis® EON input before the connector), including the LBO at the output of OA, and Span loss
Total System Loss measurement	From points MPI-S (Main Path Interface at the Metropolis® EON output after the connector) to MPI-R (Main Path Interface at the Metropolis® EON input before the connector)

Figure 5-1 Metropolis® EON Conventions Used for Two-OA Application

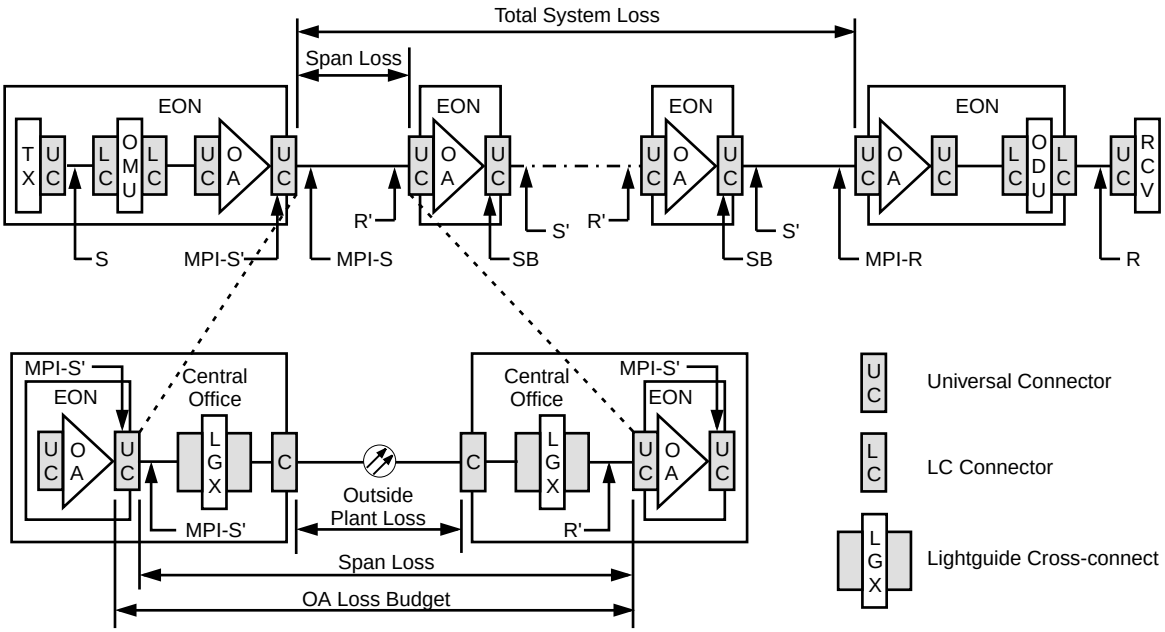

EON = Metropolis™ Enhanced Optical Networking (EON)

nc-metro-097

Engineering Rule Conventions for Single-OA Applications with Line Interface

The following table and figure show the term and definition conventions used in this chapter for a single, 16-channel OA Metropolis® EON application with line interface.

Table 5-3 Metropolis® EON Conventions Used for Single-OA Application with Line Interface

Single-OA Application with Line Interface Term	Defined as used in Metropolis® EON
Outside Plant Loss	Fiber loss in outside plant which covers the section of a system from one building boundary to another
Span Loss measurement	From points MPI-S (Main Path Interface at the Metropolis® EON output after the connector) to MPI-R (Main Path Interface at the Metropolis® EON input before the connector), including any lightguide cross connect (LGX) connectors in the optical path and outside plant loss
OA Loss Budget measurement	From points MPI-S' (Main Path Interface at the Metropolis® EON output before the LBO) to MPI-R (Main Path Interface at the Metropolis® EON input before the connector)

Figure 5-2 Metropolis® EON Conventions Used in Single-OA Application with Line Interface

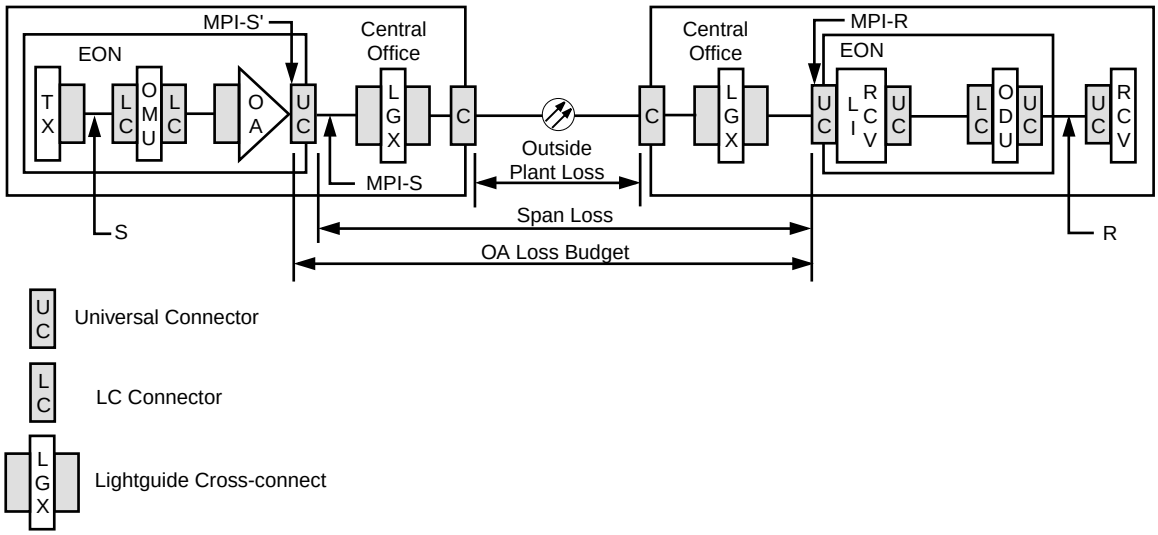

Engineering Rule Conventions for Single-OA Applications without Line Interface

The following table and figure show the term and definition conventions used in this chapter for a single-OA Metropolis® EON application without line interface.

Table 5-4 Metropolis® EON Conventions Used for Single-OA Application without Line Interface

Single-OA Application without Line Interface Term	Defined as used in Metropolis® EON
Outside Plant Loss	Fiber loss in outside plant which covers the section of a system from one building boundary to another
Span Loss measurement	From points MPI-S (Main Path Interface at the Metropolis® EON output after the connector) to MPI-R (Main Path Interface at the Metropolis® EON input before the connector), including any lightguide cross connect (LGX) connectors in the optical path and outside plant loss
OA Loss Budget measurement	From points MPI-S' (Main Path Interface at the Metropolis® EON output before the LBO) to MPI-R (Main Path Interface at the Metropolis® EON input before the connector)

Figure 5-3 Metropolis® EON Conventions Used in Single-OA Application without Line Interface

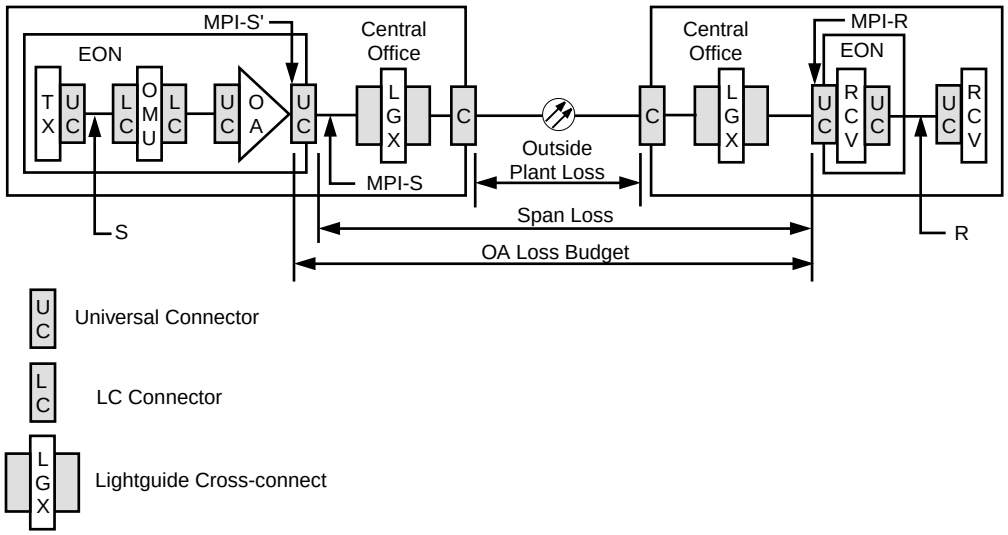

Engineering Rule Conventions for Zero-OA Applications

The following table and figure show the term and definition conventions used in this chapter for a zero-OA Metropolis® EON application.

Table 5-5 Metropolis® EON Conventions Used for Zero-OA Application

Zero-OA Application Term	Defined as used in Metropolis® EON
Outside Plant Loss	Fiber loss in outside plant which covers the section of a system from one building boundary to another
Span Loss measurement	From points MPI-S (Main Path Interface at the Metropolis® EON output after the connector) to MPI-R (Main Path Interface at the Metropolis® EON input before the connector), including any lightguide cross connect (LGX) connectors in the optical path and outside plant loss

Figure 5-4 Metropolis® EON Conventions Used in Zero-OA Application

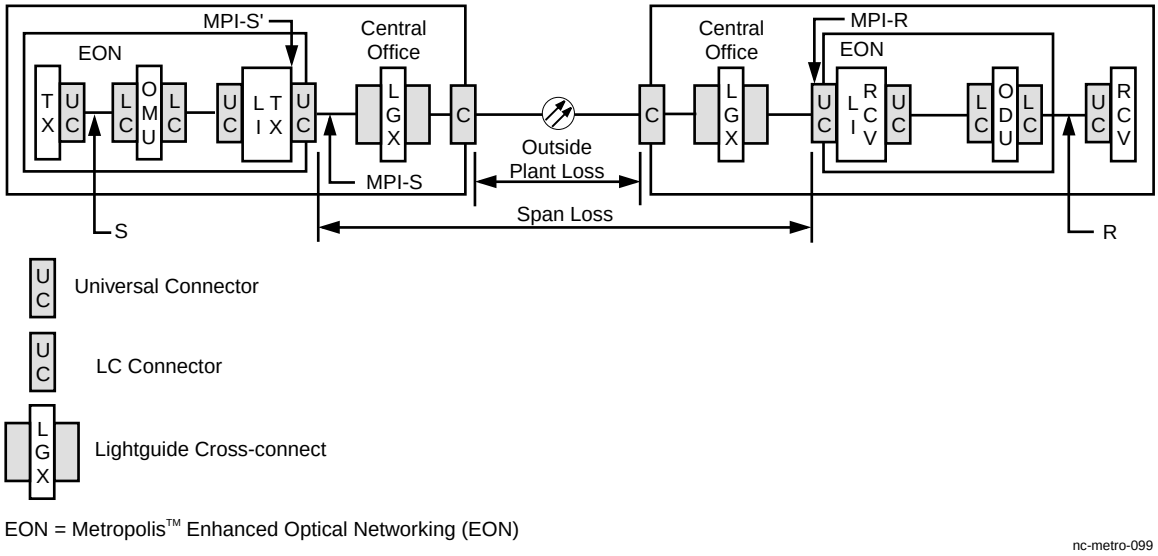

Metropolis® EON Engineering Rules for Amplification

Introduction

This section describes the engineering rules for Metropolis® EON Release 8.2.

Engineering Rules for Two-OA Applications

The engineering rules for two-OA applications allow Metropolis® EON systems to have a total of up to eight spans between end terminals. A typical engineering route has mixed span distances as shown in following figure.

Figure 5-5 Example of Simple Engineering Rules for Two-OA Application

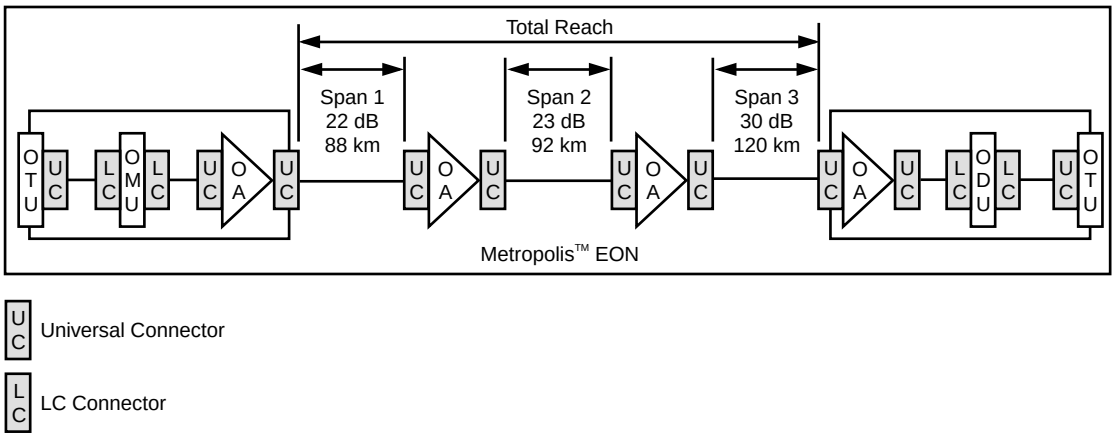

This figure illustrates how to use engineering rules for a two-OA application. The route shown in this figure has three spans, each consisting of different span distances measured in kilometers (km). Span 1 measures 88 km; Span 2 measures 92 km; and Span 3 measures 120 km.

The engineering rules require that the route shown in this figure meet the following criteria:

- No span can exceed the allowable maximum span distance (or span loss)
- Each span must be built out to the minimum span distance (or span loss)

Using the 32- and 16-Channel, Two-OA Application Engineering Rules Tables

The following two tables (for standard single-mode fiber (SSMF/ITU-T Rec. G.652) show the engineering rules for 32-channel and 16-channel amplifiers, respectively. For example, for the 3-span system shown in Figure 5-5, you would look in Table 5-6 and find the LEA307 column and the 3-span row to make sure the system meets maximum and minimum distances criteria.

Typically, to find the engineering rule for a route with an overall length:

1. Look up the “Total Reach (km)” column in Tables 5-6 and 5-7 to select a total system reach distance that is higher than the required overall length.
2. Use the engineering rule that corresponds to that total reach distance.

For example, suppose you are designing a system and you want to know how many spans you need. If the overall length is 312 km, look up in Table 5-6 under the “Total Reach (km)” column and then select the total reach distance of 336 km because it is higher than the required 312 km overall length. The corresponding engineering rule for this 336 km total system reach distance is the LEA207 OA 4-span system with 21 dB loss per span.

Table 5-6 Engineering Rules for 32-channel, Two-OA Metropolis® EON Application

OA Code	Max Data Rate	Max No. Channels	No. Spans	Span Loss dB		Max Single Span (dB)[1]	Span Distance[2]		Total System Loss (dB)	Total System Reach[2]		OA Output LBO (dB)[5]
				Min	Max		(km)	(mi)		(km)	(mi)	
LEA207 TX and RCV	2.5 Gb/s	32	1	19	26	26	104	65	26	104	65	0
			2	19	25	25	100	63	50	200	125	0
			3	19	23	23	92	58	69	276	173	0
			4	18	21	21	84	53	84	336	210	0
			5	17	20	20	80	50	100	400	250	0
			6	16	19	19	76	48	114	456	285	0
			7	14	17	17	68	43	119	476	298	3
			8	14	15	15	60	38	120	480	300	3
	10 Gb/s (note 3)	32	1	19	23	23	92	58	23	50	31	0
			2	18	22	22	88	55	44	50	31	0
			3	17	20	20	80	50	60	50	31	0
LEA207 TX and LEA307 Normal Gain Rptr/Rcv (note 6)	10 Gb/s (note 4)	32	1	19	25	25	100	63	25	100	63	0
			2	19	23	24	92	58	46	184	116	0
			3	18	22	23	88	55	66	264	166	0
			4	17	20	21	80	50	80	320	202	0
LEA307 Normal Gain Tx and Rcv (note 6)	10 Gb/s (note 4)	32	1	19	26	26	104	65	26	104	65	0
			2	19	25	25	100	63	50	200	125	0
			3	19	23	23	92	58	69	276	173	0
			4	18	21	21	84	53	84	336	210	0
			5	17	20	20	80	50	100	400	250	0
			6	16	19	19	76	48	114	456	285	0
			7	14	17	17	68	43	119	476	298	3
			8	14	15	15	60	38	120	480	300	3

OA Code	Max Data Rate	Max No. Channels	No. Spans	Span Loss dB		Max Single Span (dB)[1]	Span Distance[2]		Total System Loss (dB)	Total System Reach[2]		OA Output LBO (dB)[5]
				Min	Max		(km)	(mi)		(km)	(mi)	
LEA307 High Gain Tx and Rcv (note 6)	10 Gb/s (note 4)	32	1	22	33	33	132	83	33	132	83	0
			2	22	32	33	128	80	64	256	160	0
			3	22	30	32	120	75	90	360	225	0
			4	22	28	30	112	70	112	448	280	0
			5	21	26	28	104	65	130	520	325	0
			6	21	25	26	100	63	150	600	375	0
			7	17	24	24	96	60	168	672	420	3
			8	17	22	22	88	55	176	704	440	3

Notes:

1. There is a column indicating the maximum loss of any one span in multiple-span applications. This does not change the total system loss of the system. For example, on a 5x26 dB system one of the spans can be 28 dB. The remaining spans must have a maximum loss of 25.5 dB:

   (130 dB - 28 dB) = 102 dB 102 dB / (4 remaining spans) = 25.5 dB

2. Distances assume fiber losses of 0.25 dB/km or 0.4 dB/mi.
3. For 10 Gb/s transmission, the LEA207 OA does not support dispersion compensation and is limited to an 850 ps/nm*km dispersion limit or a 50 km (31 mi) of SSMF maximum distance between OTUs.
4. Routes with greater than 50 km (31 mi) of SSMF (850 ps/nm*km) carrying 10 Gb/s signals will require dispersion compensation. (The dispersion compensation rules are discussed in the section "Engineering Rules for Dispersion Compensation" in this chapter.) Routes with total system reach greater than 640 km (400 mi) require DCM for 2.5G signals.
5. The OA output LBO is installed on long point-to-point systems with many repeaters to reduce the fiber non-linearities.
6. The LEA307 can be provisioned for Normal or High gain using the ENT-OLINE TL1 command. For routes that do not need the higher power, the Normal setting keeps the output power of the OA below +17 dBm.

Table 5-7 Engineering Rules for 16-channel, Two-OA Metropolis® EON Application

OA Code	Max Data Rate	Max No. Channels	No. Spans	Span Loss dB		Span Distance[1]		Total System Loss (dB)	Total System Reach[1]		OA Output LBO (dB)[5]
				Min	Max	(km)	(mi)		(km)	(mi)	
LEA7B	2.5G b/s	16	1	22	33	132	83	33	132	83	0
			2	22	30	120	75	60	240	150	0
			3	22	28	112	70	84	336	210	0
			4	22	27	108	68	108	432	270	0
			5	21	26	104	65	130	520	325	0
			6	21	26	104	65	156	624[2]	390	0
			7	17	22	88	55	154	616	385	3
			8	17	22	88	55	176	640[3]	400[3]	3
LEA107B	2.5G b/s	16	1	22	35[4]	140	88	35	140	88	0
			2	22	34[4]	136	85	68	272	170	0
			3	22	33	132	83	99	396	248	0
			4	22	31	124	78	124	496	310	0
			5	22	27	108	68	135	540	338	3
LEA105	2.5G b/s	16	1	14	18	72	45	18	72	45	0

Notes:

1. Distances assume fiber losses of 0.25 dB/km or 0.4 dB/mi.
2. The LEA7B OA 6-span (6x26 dB) system which gives 624km total reach goes farther with fewer repeaters than the 7-span (7x22 dB) system which gives 616 km total reach. Seven-span systems for routes that use existing repeater sites may have to be used.
3. This distance is limited by the dispersion characteristics of standard single mode fiber (SSMF/G.652) (640 km x 17 ps/nm-km=10880 ps/nm).
4. The maximum span loss with the LEA107B OA is limited to 33 dB if using the LDA4 (1510 nm) Telemetry Circuit Pack.
5. The OA output LBO is installed on long point-to-point systems with many repeaters to reduce the fiber non-linearities.

Engineering Rules for Single-OA Applications

The following table (for standard single-mode fiber (SSMF/ITU-T Rec. G.652) shows engineering rules for single-OA operation which has only one span between the end terminals. The engineering rules require that the route does not exceed the maximum span distance (or span loss) specified in this table.

Table 5-8 Engineering Rules for 32- and 16-channel, Single-OA Metropolis® EON Application

OA Code	Max Data Rate	Max No. Channels	No. Spans	OMU/ODU Max through Loss (dB)	Span Loss (dB)		Total System Reach (note 1)	
					Min	Max	(km)	(mi)
LEA7B (note 2)	2.5 G b/s	16	1	15/12	0	12	48	30
				8/8	0	16	64	40
LEA7B (note 3)	2.5 G b/s	16	1	8/8	0	16	64	40
				5.5/5.5	0	19	76	48
LEA207 or LEA307 Normal Gain (notes 4 and 6)	2.5 G b/s	32	1	8/8	0	15	60	38
				5.5/5.5	0	17	68	43
	10 G b/s	32	1	8/8	0	9	36	23
				5.5/5.5	0	11	44	28
LEA307 High Gain (notes 4 and 6)	2.5 G b/s	32	1	8/8	0	17	68	43
				5.5/5.5	0	19	76	48
	10 G b/s	32	1	8/8	0	14	56[5]	35
				5.5/5.5	0	16	64[5]	40

Notes:

1. Distances assume fiber losses of 0.25 dB/km or 0.4dB/mi.
2. R6 and R7 OMU/ODU with LDA1 TLM
3. R8.0 OMU16/ODU16
4. OMU16/ODU16 for channels 1-16 and OMU32/ODU32 for channels 17-32.
5. Distances over 50 km (8550 ps/nm*km) require dispersion compensation.
6. The LEA307 can be provisioned for Normal or High gain using the ENT-OLINE TL1 command. For routes that do not need the higher power, the Normal setting keeps the output power of the OA below +17 dBm.

Engineering Rules for Zero-OA Applications

The following table shows the engineering rules for zero-OA operation which has only one span between the end terminals. Zero-OA operation uses the LITX and LIRCV circuit packs to inject and separate out the supervisory signal. The engineering rules require that the route does not exceed the maximum span distance (or span loss) specified in the following table.

Table 5-9 Engineering Rules for 32-channel, Zero-OA Metropolis® EON Application[1]

Maximum Data Rate	OMU/ODU Maximum through Loss (dB)	Maximum Number of Channels	Number of Spans	Maximum Span Loss (dB) (note 2)	Total System Reach (Note 3)	
					(km)	(mi)
2.5 Gb/s	5.5/5.5	32	1	9	36	23

Notes:

1. For standard single-mode fiber (SSMF/ITU-T Rec. G.652).
2. Requires R8.0 5.5 dB OMU/ODU, Transmit/Receive Line Interface, and OTUs With at least -4 dBm output power (Release 8.0 OTPM25 or Release 8.2 OTPM UBB
3. Distances assume fiber losses of 0.25 dB/km or 0.4 dB/mi.

Engineering Rules for Pass-through Connections

This section presents the engineering rules for determining whether a regeneration OTU is required for pass-through connections.

Optical Line Design Rules for OMU to ODU

1. Determine the number of terminal locations and span losses between the OMU and ODU. The optical line to be designed exists from the OMU at one terminal to the ODU at the next terminal.
2. Use the Engineering Rules in Table 5-2, Table 5-3, and Table 5-4 to determine the number and type of amplifiers and any repeater sites needed to support the optical line.
3. For point-to-point systems the optical line design is complete; for ring systems with pass-through wavelengths see the “Design Rules for Pass-through Wavelength” in this section.

Design Rules for Pass-through Wavelengths

The engineering design rules for pass-through wavelengths consist of:

- General rules for Ring DWDM systems
- Rules specific to Release 7 systems
- General pass-through rules for single-OA systems
- General pass-through rules for two-OA systems
- General pass-through rules for combined single-OA and two-OA systems
- Pass-through connections are not allowed on zero-OA systems

General Rules for Ring DWDM Systems

- Each wavelength used is dual fed around both sides of the ring.
- An Optical Add Drop Multiplex (OADM) office is defined as a Metropolis® EON dual terminal shelf or two colocated end terminal shelves with pass-through wavelengths. These wavelengths can be connected directly from ODU OUT to OMU IN. The ODU to OMU connection has 11dB of loss for Release 8.2 (must use 5.5 dB loss OMU/ODU for pass-through).
- Pass-through wavelengths must meet the optical line engineering rules over their entire transmission path.

Rules Specific to 16-channel OA Systems (LEA7B, LEA107B)

- The Release 7 pass-through feature provides the capability of “passing through” a maximum of four 16-channel optical amplifiers (6 optical amplifiers for two-OA repeatered systems). This feature allows two pass-through OADM offices for single-OA systems and 1 pass-through OADM office for two-OA systems.
- For 16-channel OAs, only 60% of the wavelengths in the system should be pass-through wavelengths from another system. This 60% limit will avoid overdriving any added wavelengths if all pass-through wavelengths simultaneously fail.

The following table lists the allowed number of pass-through wavelengths for the number of wavelengths equipped.

Table 5-10 Maximum Number of Pass-throughs for Total Channels Equipped: 16-channel OA Only

Total Channels Equipped	1	2	3	4	5	6	7	8	9	10	11	12	13	14	15	16
Maximum Number of Pass-throughs	1	1	1	2	3	3	4	4	5	6	6	7	7	8	9	9

Rules Specific to 32-channel OAs (LEA207, LEA307)

- The LEA207 OA will support 10 Gb/s signal pass-through applications with a maximum distance of 50km (31mi) between OTUs.
- The LEA307 OA will support 10 Gb/s signal pass-through applications with a maximum distance determined by the dispersion compensation fibers equipped.

General Pass-through Rules for Single-OA Systems

- For single-OA systems, when a wavelength is connected to an OADM office, the ODU-OMU connection adds to the span loss for that pass-through wavelength.
- A pass-through wavelength can travel through 3 spans of "Maximum Span Loss" as shown in the following table. One of the three spans can have the "Maximum Loss for one of the Spans."

Table 5-11 Pass-Through Application Engineering Rules for Spans with One Optical Amplifier (10Gb/s Maximum Data Rate)

Amplifier	OMU/ODU Maximum Through Loss (dB)	Maximum Number of Channels	Number of Spans	Maximum Span Loss (dB)	Maximum Loss for One Span
LEA207 or LEA307 (Normal Gain)	8/8	32	1	4	7
	5.5/5.5	32	1	9	12 (see note)
LEA307 (High Gain)	8/8	32	1	7	9
	5.5/5.5	32	1	12	14

Notes:

1. A 10G span of 12 dB would reduce the 2-3 DB margin built into the engineering rules by 1 dB. Table 5-8 lists maximum 10G span loss of 11 dB.

General Pass-through Rules for Two-OA Systems

- For two-OA systems, when a wavelength is connected to an OADM office the ODU-OMU connection counts as a span for that pass-through wavelength. As shown in the figure below a signal passes from Node 1 to Node 3 through Node 2. The signal traverses 3 spans: 2 spans with 25dB of loss and a patch through of 16dB. The wavelength meets the 3x28 engineering rule for the LEA7 amplifier.
- There can be no more than 1 repeater site between any 2 terminals.
- The maximum number of spans that a single wavelength can travel is 5. This can be a 1-span system connected to a 3-span system using a pass-through connection or it can be two 2-span systems connected together with a pass-through connection. For systems using 46Ax or 47Ax OTPMs with LEA207 or LEA307 OAs, 7 spans are allowed (3 pass-through connections).
- LEA7B amplifiers must be set to pump setting C for pass-through applications.
- LEA107B amplifiers must be set to pump setting B for pass-through applications.
- For 16-channel OAs, LBO selection into the downstream system for pass-through signals needs changing when the number of wavelengths on the upstream system goes from 1 to 2 wavelengths.

Figure 5-6 Pass-through Route Example

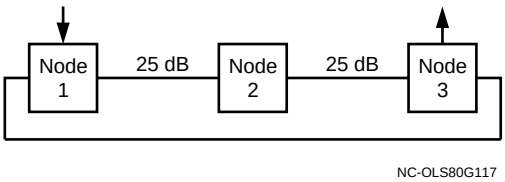

General Pass-through Rules for Combined Single-OA and Two-OA Systems

- Combined systems are allowed a maximum of three systems:
  - 2 two-OA systems and 1 single-OA system or
  - 1 two-OA system and 2 single-OA systems.

  One of the two-OA systems is allowed a maximum of one repeater site.
- For combined single-OA and two-OA systems.
  1. Check that the single-OA spans meet their pass-through maximum span loss requirements shown in Table 5-11.
  2. Count the number of optical amplifiers in the system. Subtract 1 from the number of amplifiers to determine the equivalent number of spans.
  3. Verify that all two-OA system spans meet level requirements (see Table 5-6 and Table 5-7) for the number of spans.

Remote ADMs

SONET/SDH network elements that are not colocated with the Metropolis® EON can be connected using OTUs to regenerate the signals at the Metropolis® EON location. The following figure shows the power levels going into and out of the OTUs. The customer must take into account the receiver sensitivity of both the remote SONET/SDH equipment and the OTU to determine the maximum appropriate losses between the DWDM and SONET/SDH equipment.

Figure 5-7 Connecting Remote Network Elements

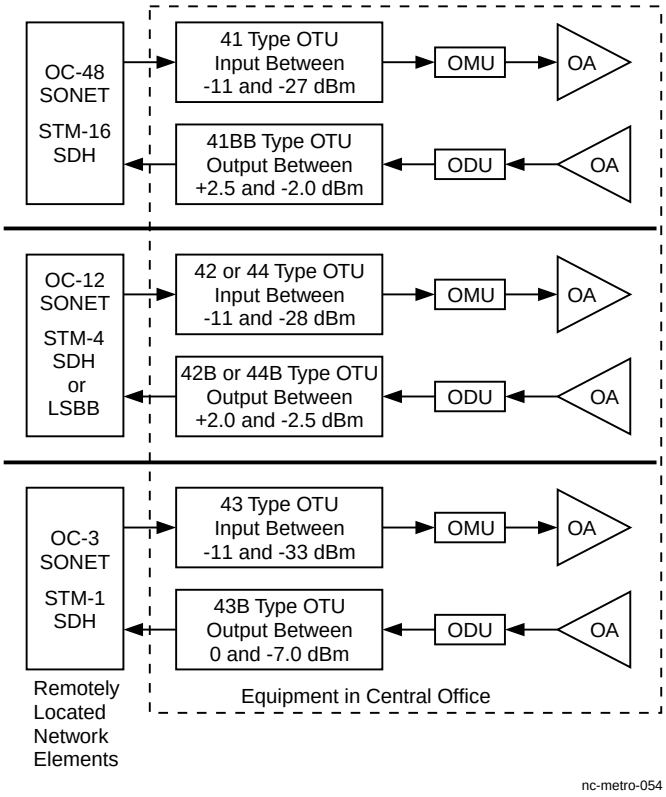

Engineering Rules for OTU Usage

OTU Functions

The OTU function is provided by an OTU, OTPM25, OTPM UBB, or an OTPM (OC-3/STM-1, OC-12/STM-4, or LSBB). All OTUs can be used to concatenate Metropolis® EON systems (regenerate) except the LSBB OTPM.

As shown in the following figure, the OTU functions include add, drop, and through connections in the Metropolis® EON system.

Figure 5-8 OTU Usage

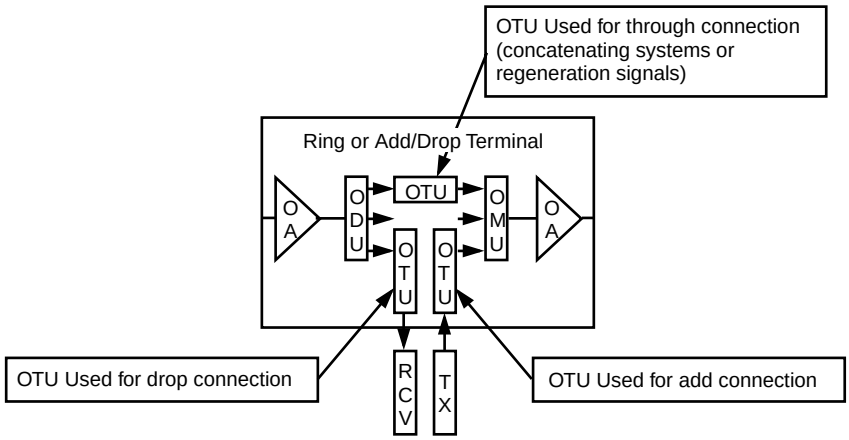

EON = Metropolis™ Enhanced Optical Networking (EON)

nc-metro-102

Add OTU Usage

Add OTUs are used to connect non-compatible optics into the Metropolis® EON system. Transmitters connected into the system may be remotely located from the Metropolis® EON system.

Through OTU Usage (Regeneration)

Wavelengths must use OTUs for regeneration when they exceed the cumulative number of spans based on the span loss rules or pass-through rules. By regenerating the digital signal, an Optical Translator Unit (OTU) can be used to concatenate Metropolis® EON systems to increase the distance between SONET/SDH terminals.

A maximum of 12 OTUs can be used between SONET/SDH terminals. The OTU also can be used to concatenate multiple point-to-point Metropolis® EON systems. Each Metropolis® EON system can have different number of spans. For terminal equipment that does not require OTUs for adding or dropping wavelengths, OTUs can be used Metropolis® EON systems and support up to 12 WAD sites. For terminal equipment that requires OTUs for adding and dropping wavelengths, OTUs can be used to concatenate up to 11 Metropolis® EON systems and support up to10 WAD sites.

Figure 5-9 OTUs for Concatenation

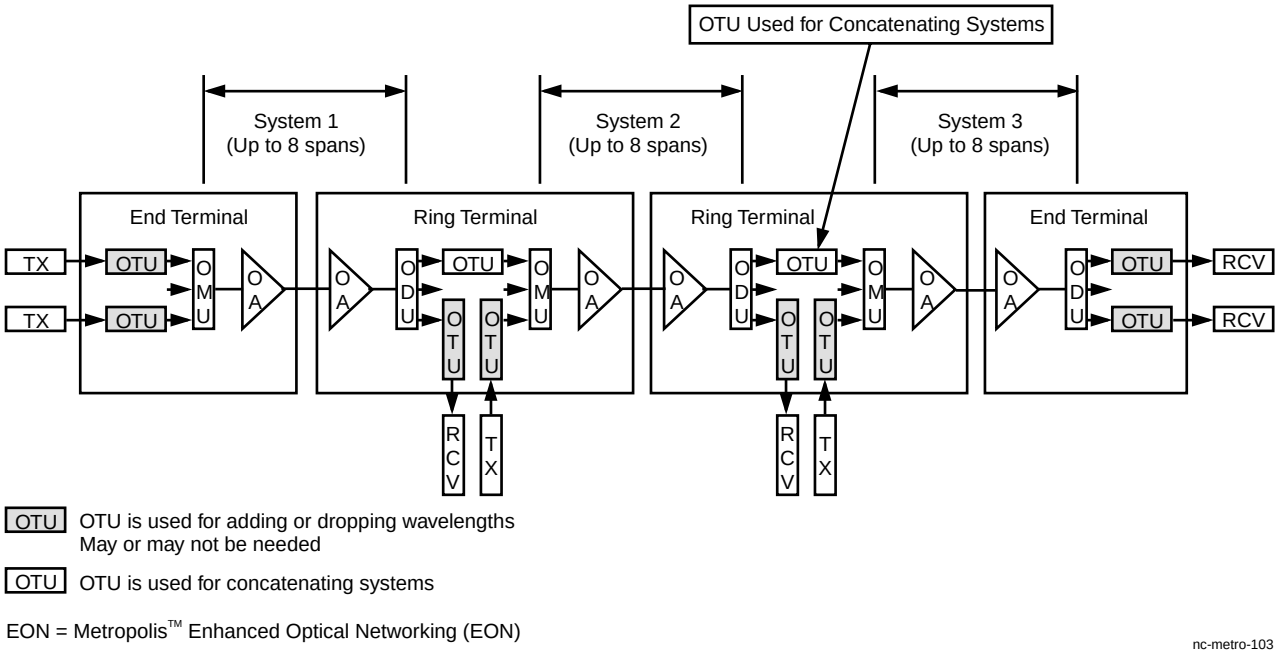

The following table shows some examples of the maximum overall distance when 12 OTUs are used to concatenate 13 point-to-point Metropolis® EON systems and each Metropolis® EON system has the maximum number of spans. For example, using 12 OTUs to concatenate 13 Metropolis® EON systems using LEA7B OAs (each Metropolis® EON system has 8 spans with 22dB loss each), the maximum overall distance is 8320 km.

Table 5-12 Example of Using OTUs to Concatenate Metropolis® EON Systems

	Units	Example 1 LEA107B Two-OA System	Example 2 LEA7B Two-OA System	Example 3 LEA7B One-OA System	Example 4 LEA207 Two-OA System	Example 5 LEA207 One-OA System	Example 6 LEA307 Two-OA System
Per Metropolis® EON System (note 1)							
Max. No. of Spans		1	8	1	8	1	8
Max. Span Loss	(dB)	33	22	12	15	15	22
Total Reach (note 2)	(km)	132	640	48	480	60	704
	(mi)	83	400	30	300	38	440
Per Wavelength							
Max. No. of OTUs		12	12	12	12	12	12
Max. No. of Spans		13	104	13	104	13	104
Max. Overall Distance (note 2)	(km)	1716	8320	624	6240	780	9152
	(mi)	1079	5200	390	3900	494	5720

Notes:

1. The following data is applicable using standard single-mode fiber (SSMF/G.652) where a typical dispersion value of 17ps/nm-km is assumed.
2. Distances assume fiber losses of 0.25dB/km or 0.4dB/mi.

Drop OTU Usage

For Metropolis® EON systems with many repeater amplifiers drop OTUs or Metropolis® EON compatible receivers are always required to guarantee performance. Drop OTUs may not be needed for shorter Metropolis® EON systems performing fiber congestion relief or metropolitan/regional distribution if the existing customer standard receivers perform sufficiently.

Drop OTU Requirements

The following statements describe requirements for using or omitting the drop OTU:

- Drop OTUs are always required for 10G signals to decode the forward error correction signal.
- The receiver on the customer equipment must operate in the 1550 nm band and meet the input power range (SONET long range requirements) and signal-to-noise requirements that the drop OTU would meet as specified in Chapter 10, "Technical Specifications", under "Optical Signal-to-Noise Ratio (OSNR)" (10-8). Not all receivers from all manufacturers will meet these requirements. Customers must evaluate the various receivers they wish to directly connect toMetropolis® EON.
- In the case of fiber congestion relief, if the Metropolis® EON system is inserted into a direct fiber span that previously carried the customer signal between transmitter and receiver, then no drop OTU is needed. In other words, if the customer equipment operated over the existing span then it should also operate through the Metropolis® EON system using the same span.
- For Metropolis® EON systems with more than one span using new fiber loss specifications, typically the drop OTU is required because the fiber dispersion or signal to noise performance exceeds the existing receiver capability. For example, OC-48 receivers that are not Metropolis® EON compatible may have a range of only 80 to 100 km (50 to 62 mi). Higher loss fiber routes may have multiple spans or pass-through connections within the 100 km (62 mi) range. The range will vary depending on the manufacturer.
- The receiving equipment should be colocated with the Metropolis® EON equipment. The fiber jumper connecting the ODU to the receiver must have less than 0.5 dB loss. If the receiving equipment is not colocated with the Metropolis® EON then a drop OTU is needed or the span loss values must be reduced for 0-OA or 1-OA spans. (The engineering rules assume a direct connection between the OTUs and the OMUs and ODUs. If

a customer chooses to remotely locate OTUs from the OMU/ODUs for a total loss of 2dB, then up to 1.5 dB should be subtracted from the maximum loss budget for 1-OA and 0-OA applications. If remotely located OTUs are required on both ends of a zero-OA application, then 3 dB should be subtracted from the loss budget).

The following two figures illustrate drop OTU usage.

Figure 5-10 Drop OTU Usage - Long Optical Line

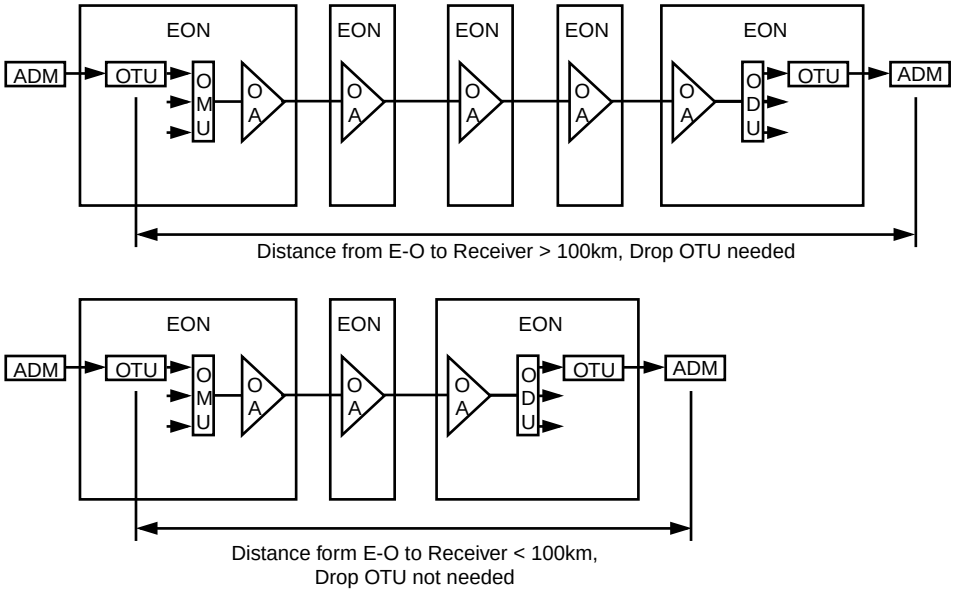

E = Electrical
O = Optical
EON = Metropolis™ Enhanced Optical Networking (EON)

nc-metro-104

Figure 5-11 Drop OTU Usage - Pass through Connections

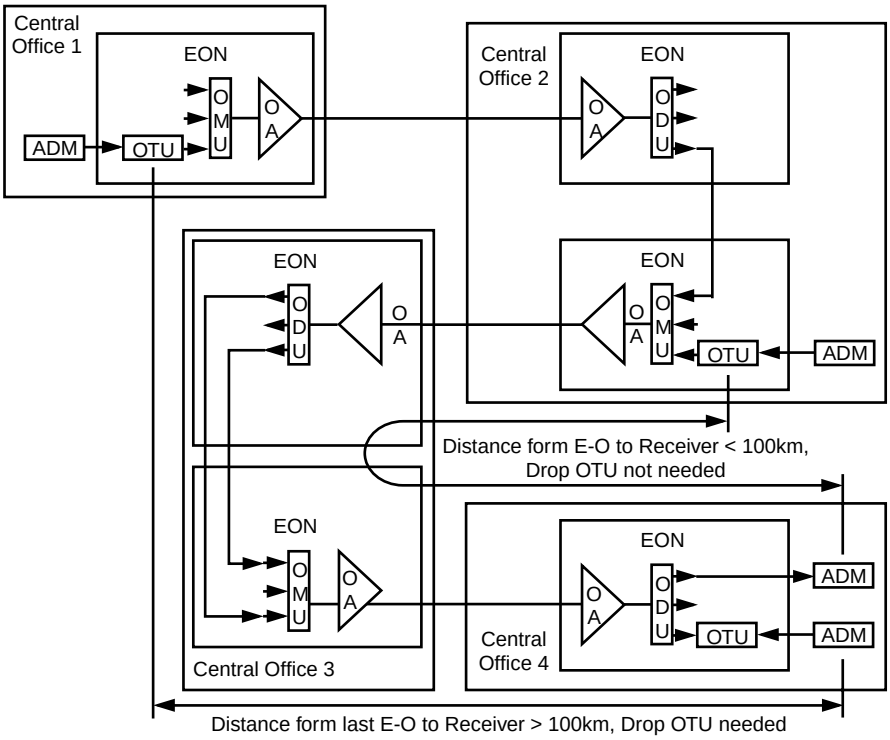

Dispersion Considerations

Dispersion includes effects of chromatic dispersion and polarization mode dispersion (PMD). PMD has little effect for systems that are OC-48/STM-16 bit rate or under and is not considered here. The dispersion limit (ps/nm) for the Metropolis® EON system can be calculated by multiplying the fiber dispersion (ps/nm-km) and distance (km). The dispersion limit is associated with the optical transmitters; the proper optical transmitters must be chosen to meet the Metropolis® EON system dispersion limit.

In Metropolis® EON systems with dispersion of less than 6200 ps/nm, use of 41HxA and 41HxC 10G OTUs or Lucent ADM with an equivalent Metropolis® EON-compatible transmitter is recommended for OC-192/STM-64 signals.

In Release 8.2 Metropolis® EON systems with dispersion of 6800 ps/nm or less, use of 47Ax OTPM UBBs, or Lucent Add/Drop Multiplexer (ADM) with an equivalent Metropolis® EON-compatible transmitter, is recommended for a signal range between 16 Mb/s and 2.5 Gb/s.

In Metropolis® EON systems with dispersion of less than 6200 ps/nm, use of 46Ax OTPM25s, 41Mx muxing OTUs (2DM25), or Lucent ADM with an equivalent Metropolis® EON-compatible transmitter is recommended for OC-48/STM-16 signals.

In Metropolis® EON systems with dispersion of less than 6800 ps/nm, use of 41AxC OTUs, or Lucent Add/Drop Multiplexers (ADM) with an equivalent Metropolis® EON-compatible transmitter is recommended for OC-48/STM-16 signals. The GbE OTU 41Fx also accommodates dispersion of less than 6800 ps/nm.

The 42Ax, 43Ax, 44Ax, and 44Cx Optical Translator Port Modules (OTPM), associated with the Quad Optical Translator Units (QOTU) and used for OC-3/STM-1, OC-12/STM-4, 100 - 750 Mb/s, and 16 Mb/s - 1.06 Gb/s optical channels, respectively, can accommodate dispersions of up to 10,900 ps/nm.

In Metropolis® EON systems with dispersion up to 10,900 ps/nm, use of 41CxC OTUs, or Lucent ADMs with an equivalent Metropolis® EON-compatible transmitter is required for OC-48/STM-16 signals.

The following table lists the transmitters' dispersion limits of the OTUs. It also lists the maximum distance before the dispersion limit is reached. For example, for an OC-48/STM-16 system with a total system distance of 640 km will require an OTU with 10880 ps/nm (17 ps/nm-km x 640 km) dispersion limit (using SSMF/G.652 with a dispersion value 17 ps/nm-km)

Table 5-13 Dispersion Limits for OTUs

Bit Rate	Maximum Distance (km)[1]	Maximum System Dispersion Limit (ps/nm)[2]	Circuit Pack Code	Tx λ
OC-48/STM-16	360 km	dispersion limit <= 6200	46Ax	1.5um
	25 dB	dispersion limit <= 1000	46Ax	1310nm
	400	dispersion limit <= 6800	41Ax	1550 nm
	25 dB	dispersion limit <= 1000	41B	1310nm
	640 km	6800 >= dispersion limit <= 10900	41Cx	1550 nm
OC-12/STM-4	640 km	dispersion limit <= 10900	42Ax	1550 nm
	25 dB	dispersion limit <= 1000	42B	1310nm
OC-3/STM-1	640 km	dispersion limit <= 10900	43Ax	1550 nm
	25 dB	dispersion limit <= 1000	43B	1310nm
broadband rates	640 km	dispersion limit <= 10900	44Ax	1550 nm
	25 dB	dispersion limit <= 1000	44B	1310nm
	360 km	dispersion limit <= 6200	47Ax	1550 nm
	25 dB	dispersion limit <= 1000	47B	1310nm
OC-192/STM-64	50 km	dispersion limit <= 850	41HxA, 41HxC	1550 nm
	20 km	dispersion limit <= 400	41HB	1550 nm
2:1 MUX OTU				
Side/Signal				
HS/2.5 Gb/s	360 km	dispersion limit <= 6200	41Mx	1550 nm
Client/GbE SM FICON SM Fiber Channel SM ISC-2 SM	10 km			1310 nm
Client/GbE MM FICON MM Fiber Channel MM ISC-2 MM	550 km			850 nm
Client/ESCON SM	20 km			1310 nm
Client/ESCON MM	2 km			1310 nm

Notes:

1. Assuming a value of 17 ps/nm-km for SSMF/G.652 dispersion:
17 ps/nm-km x 360 km = 6120 ps/nm dispersion limit;
17 ps/nm-km x 640 km = 10880 ps/nm
2. Dispersion limits for a 2dB optical path power penalty.

Important! The standard data signals less than 100 Mb/s typically have distance limitations much less than the distances allowed in the Metropolis® EON systems.

Engineering Rules for OMU/ODU Usage

Engineering Rules

The following table lists OMU and ODU codes available in different releases. As of Release 8.0 these codes are available in either 8dB or 5.5dB loss versions.

Table 5-14 OMU/ODU Usage in Different Releases

OMU			
Name	**Code**	**Max Loss (dB)**	**Release Available**
OMU1	506A	14	2.1
OMU16	507A	8	8.0
OMU16	507B	5.5	8.0
OMU32	508A	8	8.2
OMU32	508B	5.5	8.2
OMU32 (future release)	509A	8	8.3
OMU32 (future release)	509B	5.5	8.3
ODU			
Name	**Code**	**Max Loss (dB)**	**Release Available**
ODU1	606A or 606B	14	2.1
ODU16	607A	8	8.0
ODU16	607B	5.5	8.0
ODU32	608A	8	8.2
ODU32	608B	5.5	8.2
ODU32 (future release)	609A	8	8.3
ODU32 (future release)	609B	5.5	8.3

Pass-Through Connections

Both the east and west sides of ring offices must be equipped with the same loss OMU/ODU if optical pass-through connection are going to be used.

□

Engineering Rules for Dispersion Compensation

Introduction

Any routes that plan to carry 10G signals over distances greater than 50 km (31 mi) between terminals must have dispersion compensation. All dispersion compensation calculations have values for the center of the band.

Types of Dispersion Compensation

The three types of dispersion compensation are defined as follows:

- Pre-Compensation: (Transmit OA) - DCM modules should be chosen so that the absolute value of the dispersion is as close to the absolute value of the required dispersion without exceeding it. For SSMF the maximum amount of pre-compensation is 35% of the following span. All percentages are calculated at the center of the band.
- Line-Compensation: (Repeater) - The required dispersion is calculated using the span distance on each side of the repeater. For SSMF the maximum amount of line-compensation is 57% of the previous span and 35% of the following span.
- Post-Compensation: (Receive OA) - DCM modules should be chosen so that the absolute value of the dispersion of the modules is as close to the absolute value of the required dispersion without exceeding it. For SSMF the maximum amount of post-compensation is 57% of the previous span.

Location of Dispersion Compensation Modules

DCM modules are physically mounted in a separate shelf and then fibered to the OA3 circuit packs. The length of these connecting fibers should be kept to 30 meters (100 feet). (See the following two figures for more information.)

The following figure shows the location and amount of dispersion compensation (DCM) allowed for single span applications:

Figure 5-12 Single-span DCM

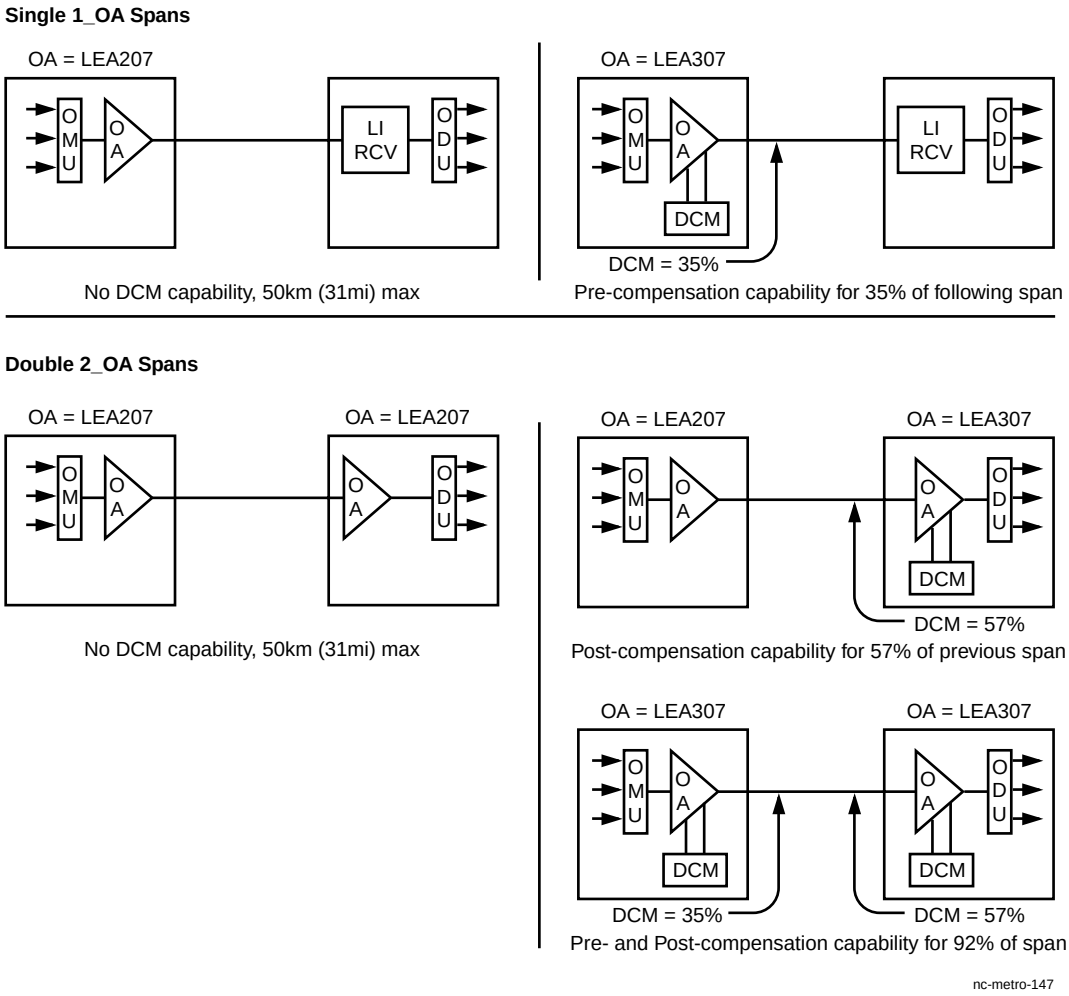

The following figure shows the location and amount of DCM for routes with repeaters.

Figure 5-13 Multiple Spans DCM

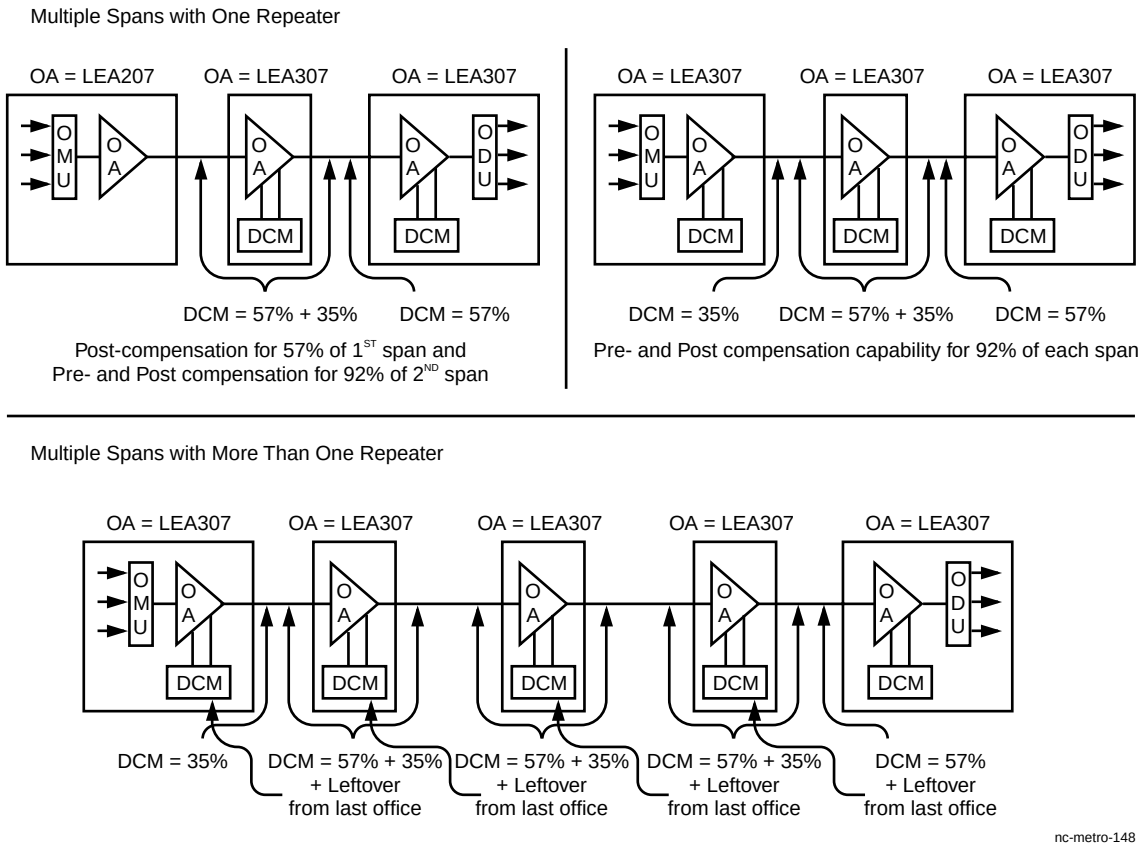

Polarization Mode Dispersion (PMD) Considerations

There are path penalties for PMD effects on 10G traffic. The engineering rules are valid for fibers with minimum PMD (<5ps mean PMD).

Reducing the maximum span loss values by a penalty value given in the following table can accommodate fibers with greater mean PMD.

Table 5-15 PMD Penalties

Mean PMD (ps)	10	12	14	15	16	17
Penalty (dB)	1	2	3	4	5	6

The rules for allocating margin for high PMD fibers are as follows:

1. From the previous table, determine the penalty required for the measured mean PMD of the configuration. Round up the value of measured mean PMD to match an entry in the table.
2. Subtract this penalty from the average span loss of the engineering rule being used.
3. Subtract this penalty from the max one span value of the engineering rule being used.

DCM Calculations

DCM calculations can be made on Metropolis® EON systems that have either zero or one repeater between nodes. DCM modules are available in 10 km granularity and a single DCM will be equipped as needed with each LEA307 OA.

The following table lists the values necessary to perform DCM calculations:

Table 5-16 DCM Calculation Values

	Transmit OA	Repeater OA	Receive OA	DCM Location	DCM Calculation
Single-span 1_OA	LEA207	--	--	None	None
	LEA307	--	--	Transmit OA	35% of span
Single-span 2_OA with 1 Repeater	LEA207	--	LEA207	None	None
	LEA207	--	LEA307	Receive OA	57% of span
	LEA307	--	LEA307	Transmit and Receive OAs	Transmit: 35% of span Receive: 57% of span
Two-span 2_OA with 1 Repeater	LEA207	LEA307	LEA307	Repeater and Receive OA	Must calculate both directions: Repeater: 57% of 1st span + 35% of 2nd span Receive OA: 57% of 2nd span
	LEA307	LEA307	LEA307	Transmit OA, Repeater, and Receive OA	Must calculate both directions: Transmitter OA: 35% of 1st span Repeater: 57% of 1st span + 35% of 2nd span Receive OA: 57% of 2nd span

Use the following steps to calculate the necessary DCM value by referencing the previous table:

1. Calculate the DCM value.
2. Calculate the residual dispersion between terminal nodes as follows:

   (Terminal to Terminal Total Dispersion) - (Sum of all equipped DCMs) = Residual Dispersion
3. Verify the Residual Dispersion between terminal is <=850 ps/nm for dropped signals and <= 700 ps/nm for optical pass-through signals.

□

Optical Power Target Levels

Overview

This section covers the optical power target levels for various circuit pack types.

OMU Input Targets

The target levels into the OMU are:

- -13 dBm per channel for OMUs 507A/508A which have 8 dB OMU insertion loss and
- -15.5 dBm per channel for OMU 507B which has 5.5 dB OMU insertion loss.

Transmit OA Input Target

The target level into the end terminal transmit OA is –21 dBm per channel for OC-48/OC-192 signals. For signal rates:

1. less than 500 Gb/s the OMU input target = -27 dB + (OMU insertion loss).
2. between 500 Mb/s and 1 Gb/s the OMU input target = -24 + (OMU insertion loss).
3. between 1 and 10 Gb/s the OMU input target = -21 + (OMU insertion loss).

Drop OTU Input Target Range

The input target range for drop OTUs or compatible receivers is:

- -13 to -28.6 dBm for <= 2.5 Gb/s signals without OAs
- -13 to -22 dBm for <= 2.5 Gb/s signals with OAs
- -13 to -20 dBm for <= 10 Gb/s signals with OAs

Use of LBOs

LBOs are used in the following cases.

- If any span loss is below the specified minimum limit, an LBO is required.
- To adjust the signal power distribution among the channels, LBOs will be used at the end terminals.
- For LEA207, LEA307, LEA7 7-span/8-span, and LEA107B 5-span applications, a 3 dB LBO is required on every OA output except the last OA to prevent potential transmission impairments due to fiber non-linearities. For details, refer to Table 5-6 and Table 5-7.

□

Release 8.2 Easy Install Feature

Introduction

OTUs, OA2, OA3, LIRCV, OMU16, OMU32, ODU16 and ODU32 circuit packs work together to provide the required reach in the planned route/ring consistent with engineering rules. Since the required reach is frequently less than the maximum reach supported by the amplifiers, the optical power must be appropriately attenuated.

The 32-channel system supports the Easy Install feature. With the Release 8.2 Easy Install feature, a user can connect fibers between OTUs/OTPMs and OMUs/ODUs without changing an LBO on the OMU.

Description

The Release 8.2 Easy Install feature uses:

1. Newer “constant gain”OAs, where the gain for each channel does not depend on the total number of channels on the line.
2. Factory-installed LBOs onto the circuit pack faceplates such that the optical power coming out of the OTU, OTPM, or ODU (for through traffic) is the correct power to go into the OMU.

The result is that the user can “plug and play” when connecting the traffic.

The Easy Install feature defines the smallest number of points at which optical power need be attenuated in order to achieve the required distance.

The following table identifies where and when LBOs may have to be installed in the field using the Easy Install feature.

Table 5-17 LBO Installation with the Easy Install Feature

Attenuation Point in Route/Ring	LBO Required?	When?
Add OTU output	Yes	With 8 dB OMU. The 2.5 dB LBO is shipped with the OMU and need not be ordered separately.
OMU16/OMU32 channel input	No	
ODU channel output	No	
Channels 17 -32 combined output from ODU to OMU	Yes	Select LBO for per-channel target of -19.7 dBm into OMU for pass-through connections.
Transmit OA input	No	
Transmit OA output	No	Some routes with many repeaters require transmit OA output attenuation.
Receive OA input	Yes	If per channel power < -21 dBm use 0 dB LBO. If per channel power > -21 dBm then attenuate to –21 dBm per channel.
Receive OA output or LIRCV output	Yes	Select LBO for per channel power of –10 dBM/-5 dBm into the dB/8 dB ODU.
Drop OTUs input	No	

Design for 1.06 Gb/s Traffic Using ELSBB OTU

Introduction

The ELSBB OTU circuit pack can be used at data rates up to 1.06 Gb/s for compatibility to carry FICON and Fiber Channel traffic with BER performance of better than 10^{-12} over 100 km (62mi) of SSMF.

ELSBB Engineering Rules

The engineering rules for the LSBB circuit pack to carry the Fiber Channel and FICON signals are the following:

1. Allow a maximum of 100 km (62 mi) total SSM fiber in the circuit (1700 ps maximum dispersion)
2. Only operate in a 2_OA configuration
3. Use pump setting C for LEA7 or LEA7B OA or pump setting B for LEA107B OA
4. Only allow an add ELSBB at the head end of the circuit
5. The output of the ODU should be directed to the Fiber Channel or FICON receiver using 100-SM-LL optics.
6. The signal level out of the ODU should be set between -8 and -13 dBm

This configuration will allow any number of channels to be used. Because of the power level restrictions, the ELSBB at 1.06 Gb/s is not compatible with OUPSR protection.

□

Introduction

The following figure shows various OUPSR connections including both the protected and unprotected configurations. Release 8.2 supports both configurations at the same time.

Figure 5-14 OUPSR Connections

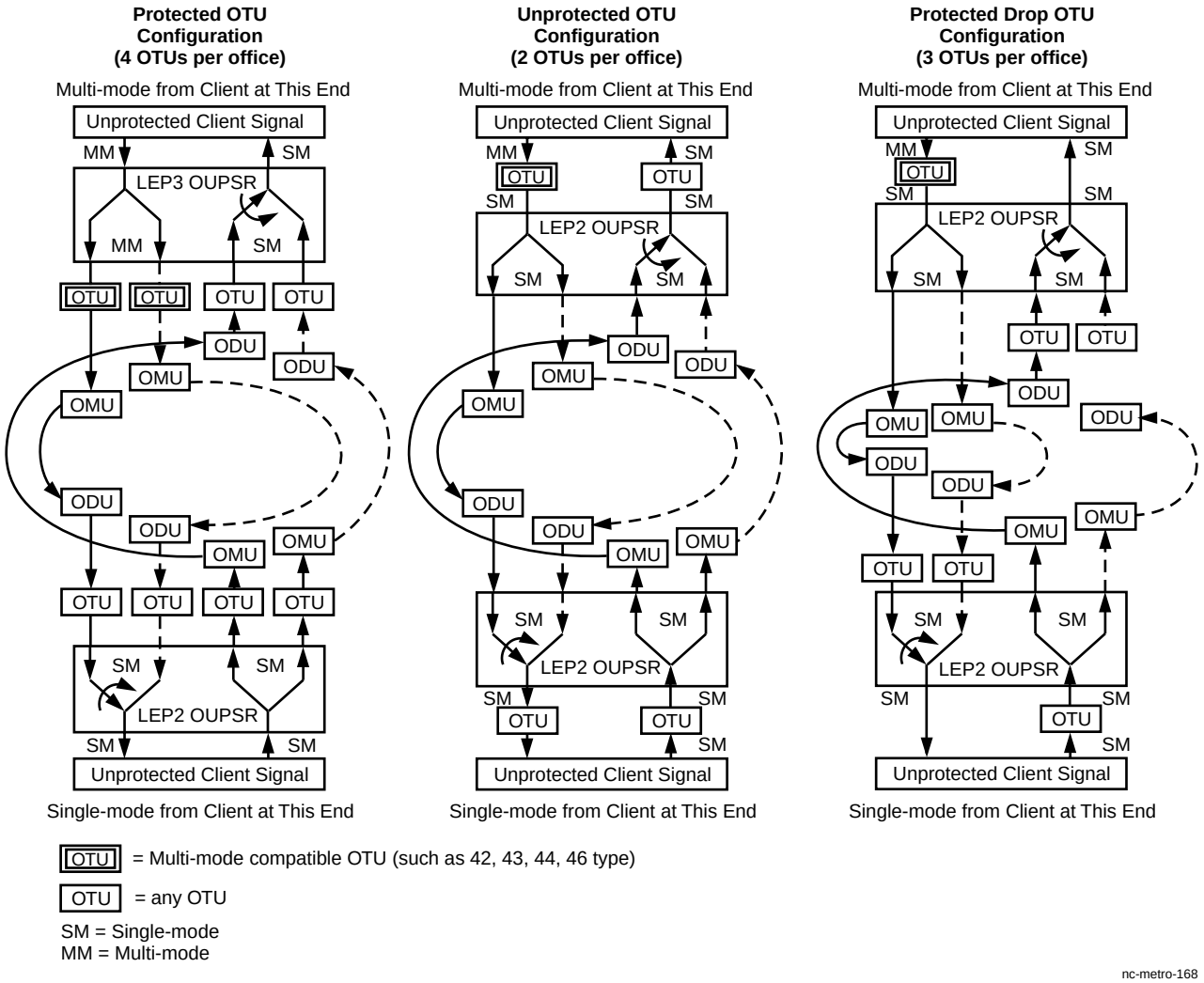

OUPSR Losses

The bridged transmit path through the OUPSR circuit pack has a maximum loss of 4.5 dB. The switched receive path through the OUPSR circuit pack has a maximum loss of 4 dB.

Release 8.2 Configuration with Protected OTUs

Because the OTUs connect to the OMU/ODU there is no system design impact on the Optical Line. The client signal connects directly to the OUPSR. The signal connected into the OUPSR should be > -22 dBm for data rates up to 2.5 Gb/s. The signal out of the OUPSR will be > -7 dBm. The OUPSR supports both single-mode and multi-mode fiber inputs.

The OUPSR has a default transmission path (A side) to carry traffic if power is lost to the shelf. The default path should be fibered to the OTU in another shelf/system. For example, the OUPSR is located in the east system and the east receiver is connected to the B path. The west OTU would continue to carry traffic if all power is lost on the east side.

Release 8.2 Configuration with Unprotected OTUs

Because the OTUs connect to the OUPSR, not the OMU/ODU, there is system design impact on the Optical Line. Zero-OA spans are not supported because of the additional losses. One-OA spans are reduced 5 dB to account for the OUPSR receive loss. The client signal connects directly to the OTUs; the LEP2 OUPSR is used in this configuration. Multi-mode client signals can be connected with LEP2 OUPSRs directly to the UBB or ELSBB OTUs. The signal connected into the OTU should be> -22 dBm for data rates up to 2.5 Gb/s. The signal out of the OTU will be > -2 dBm.

Because the OTU is not protected, the OUPSR can be located in the same system (east or west) as the OTU, or they can be located in different systems.

□

Floor Plan Layout

Introduction

The following figure shows a typical floor plan layout for the Metropolis® EON system in a central office. Metropolis® EON is a front access system with rear aisle space of 2 feet that is recommended for any future installation or modification work. If floor space is limited, the rear aisle can be reduced to no less than 4 inches. Refer to the floor plan data sheets (804-604-161 and 804-604-162) for explicit details.

Figure 5-15 Typical Floor Plan Layout

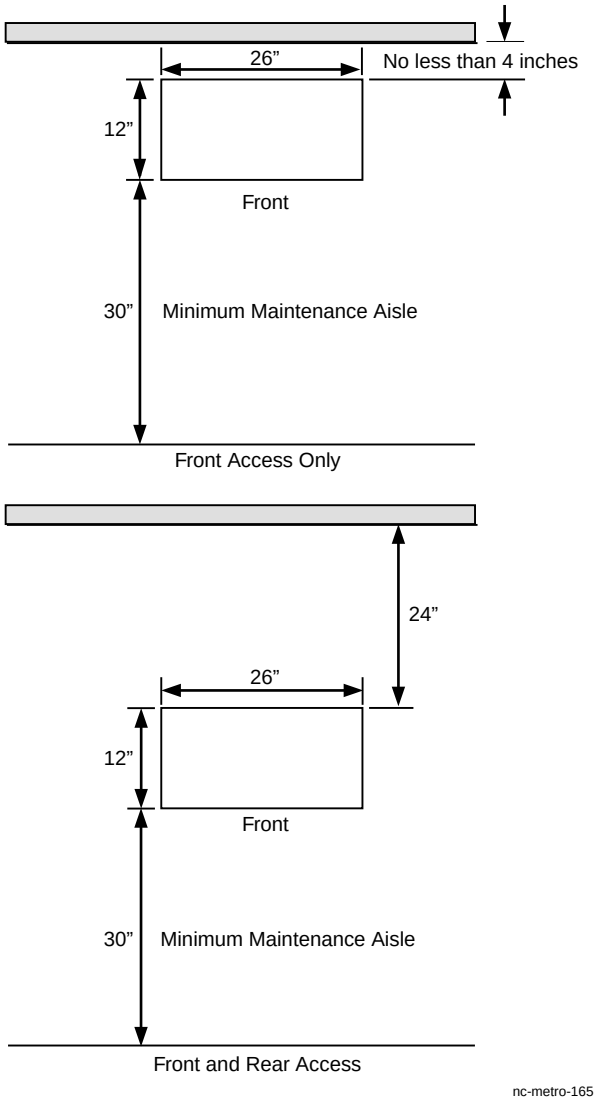

Example The following figure shows the example used to calculate the square foot area used for determining power dissipation.

Figure 5-16 Square Foot Area Used in Power Dissipation Calculation

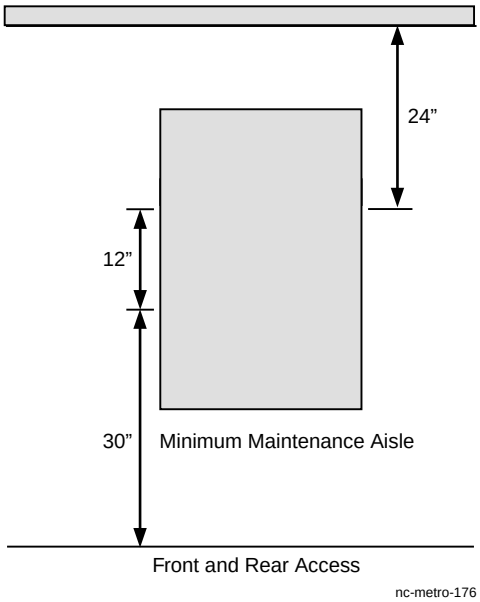

The total area of equipment (footprint) plus one half of the aisle area in front of and behind the equipment is calculated in this example as follows:

- Equipment area = 12" x 26" = 312"^{2}
- One-half front aisle space area = 15" x 26" = 390 in.^{2}
- One-half rear aisle space area = 12" x 26" = 312 in.^{2}

Total square feet = (312 + 390 + 312) divided by 144 = 7.04 ft.^{2}

□

Environmental Considerations

Metropolis® EON shelves and bays comply with the environmental compatibility requirements in GR-63-CORE, Issue 1, October 1995 and GR-1089-CORE, Issue 1, November 1994 documents.

Perforated metal meshes are used as part of the shelf construction to cover the top and bottom areas of the shelf in order to form an electromagnetic enclosure for all circuit packs in the shelf. Metropolis® EON shelves, circuit packs, and cable treatments are designed to satisfy the requirements of *GR-1089-CORE, Issue 1, November 1994.*

Metropolis® EON complies with the IEC 801-2 electrostatic discharge (ESD) recommendation for exchange carriers. The shelves are grounded to the bay frame by the shelf mounting hardware. An ESD jack is provided on the fuse panel for grounding straps. Refer to Chapter 10 for detailed environmental specifications.

Operating Voltage

The operating voltage range of the EON system is:
-42.75 VDC to -75 VDC.

Power Feeders

Two power feeders and returns (feeders A and B) should be used to power each Metropolis® EON system. Redundant power feeders are used to ensure maximum system reliability. All power feeders should be sized to carry the maximum shelf power consumption. Each feeder is equipped with a filter to reduce any switching noise that may be present on the input current.

Guidelines for Power Dissipation

Metropolis® EON, starting with Release 8.0, dissipates heat by forced air cooling. Current drains and power dissipation depend on the content of the bays, as described as follows.

Ring terminal packages support 40 full-sized and 80 half-sized slots for growth. These may be filled with any mix of full-sized OTUs, OUPSR devices and half-sized OTPMs (including the new (add) 47Ax OTPM UBB) with one limitation.

The OT Controller and OT Complementary shelves, with their associated fan assemblies, cannot exceed a total power dissipation of 1268 Watts.

Consider the following example of a circuit pack configuration:

- Nine 41T QOTU carriers = 9 X 20.5W = 184.5W
- Thirty-six 46 type OTPMs = 36 X 20.5W = 738W
- One LUD1 OTCTL = 1 X 8W = 8W
- Two LEP2 OUPSR = 2 X 2.5W = 5W
- Two Fan Assemblies = 2 X 158W = 316W

Total power dissipation for both shelves = 1251.5W which is less than the total power dissipation allowed which is 1268W. The total power dissipation for both the OT Controller shelf and OT complementary shelf cannot exceed 1268 watts.

The OT controller and OT complementary shelf, together, can support a maximum of nine QOTU carriers fully loaded with 2.5G (46Ax) OTPMs. The remaining two slots may be loaded with OUPSRs.

If all OC-48/STM-16 signals are required, additional shelves may be required to house a full complement of 64 add OTUs and 64 drop OTUs, as well as 32 OUPSR circuit packs in a fully-loaded ring terminal in a two-node ring with all optically connected channels.

Wattage Per Unit

The following table gives the wattage for each type of circuit pack or other unit found in a Metropolis® EON or OT shelf.

Table 5-18 Wattage Per Unit of a Metropolis® EON Bay

Unit Code	Description	Watts Per Unit
n/a	Fan	158
LEA307	OA3	77.5
LEA207	OA2	51.5
LEA209/LEA210/LEA211	LIRCV/LIHTR/LITX	26.5
507A/B	OMU16	0
508A/B	OMU32	0
607A/B	ODU16	0
608A/B	ODU32	0
LEA208	OMON (future release)	55 (expected)
LEP2/LEP3	OUPSR	2.5
41AxC type and 41B type	OC-48 OTU	20.5
41M type	Multiplexing OTU	25
41HxA type and 41HxC type	10G OTU	36
41S	Quad carrier	7
41S/41T/41U	Quad carrier	20.5
44A type and 44B type	LSBB	9
44C type and 44BC type	ELSBB	9
46 type	OC-48 OTPM	20.5
47 type	UBB OTPM	15
LEA1	SYSCTL	10
LEA2	SYSMEM	7
LEA102	TOHCTL	8.5
LDA4	TLM	7.5
LDA3	IAOLRP	10
LUD1	OTCTL	8

Example

The following is an example of a supported circuit pack loading in a bay with 3 OT shelves.:

Type of Unit	Number	Formula	Total Watts
OTCTL	1	1 X 8W	8
OUPSR	8	8 X 2.5W	20
10G OTU	12	12 X 36W	432
UBB OTPM (in 4 QOTUs)	16	(16 X 15W) + (4 X 20.5W)	322
Fan	3	3 X 158W	474
		Total for Bay:	1256

Typical Power Formulas

The formulas below show power dissipation for a typical Integrated Bay (Single).

Formula for Typical Metropolis® EON Shelf

Fan + (2 x LEA207) + (1 x LDA4) + (1 x LDA3) + (1 x LEA1) + (1 x LEA2) + (1 x LEA102) + (1 x OMU16) + (1 x ODU16) + (1 x OMU32) + (1 x ODU32) + (2 x LIHTR)

= 158W + 103W + 7.5W + 10W + 10W + 7W + 8.5W = **304W**
= + 0W + 0W + 0W+ 0W + 53 W =**357W**

Formula for Typical OT Controller Shelf

Fan + (1 x OTCTL) + (16 x OTPM25) + (4 x QOTU)

= 158W + 8W + 328W + 82W = **576W**

Formula for Typical OT Complementary Shelf

Fan + (20 x OTPM25) + (5 x QOTU) + (2 x 10G OTU)

= 158W + 410W + 102.5W + 72W = **742.5W**

Formula for Typical Integrated Bay (Single)

Typical Metropolis® EON shelf + typical OT Controller shelf + OT Complementary shelf = 357W + 576W + 742.5W = **1675.5W**

Typical Power Table

The following table presents information on power dissipation and current drains for a typical Integrated Bay (Single). OT shelves are fully loaded with OTPM25s and 10G OTUs as described in the previous section. Metropolis® EON shelves are loaded with two LEA207 OA2s, one LDA4 TLM and one LEA3 IAOLRP.

Table 5-19 Typical Integrated Bay (Single) Power Dissipation

	Maximum Power Dissipation		Current Drains per Feeder[1]	
	Watts	**Watts per Square Foot (Watts/7.04 ft^2)**	**Nominal at -48V (List 1)[2]**	**Maximum -42.75 (List 2)[3]**
Equipment Package				
Metropolis® EON Shelf	357	50.7	3.7	8.4
OT System Controller Shelf	576	81.8	6	13.5
OT Complementary Shelf	742.5	105.4	7.7	17.4
Integrated Bay (Single)	1675.5	237.9	17.4	39.3

Notes:

1. Nominally, both feeders share the current equally for the bay frames or shelf. If one feeder fails, the remaining feeder carries the total load for the bay or shelf (feeder A + feeder B current).
2. In power engineering, List 1 refers to the current drains used to size batteries and rectifiers. To size batteries and rectifiers, use twice the Nominal (List 1) current drain per feeder. These current drains represent the average busy-hour current at normal operating voltages.
3. In power engineering, List 2 refers to the current drains used to size feeder cables and fuses. To size feeder cables and fuses, use the Maximum (List 2) current drain per feeder. These current drains represent the peak current under worst case operating conditions.

□

6 Operations, Administration, Maintenance, and Provisioning

Overview

Purpose This chapter describes the various features regarding operations, maintenance, administration, and provisioning (OAM&P) of the Metropolis® EON.

Contents The following sections are included in this chapter:

Operations	6-2
Administration	6-11
Maintenance	6-14
Provisioning	6-35

Operations

Introduction

This section describes the hardware and software user interfaces that control the administration, maintenance, and provisioning of Metropolis® EON. Maintenance procedures use Craft Interface Terminals (CIT) to retrieve detailed reports about performance monitoring, alarms and status, and system configuration for local and remote terminals. Office alarms, the indicator strip, and the circuit pack faceplate LEDs provide audible and visible alarm information.

Operations Interfaces

Metropolis® EON supports the following operations interfaces:

- CIT
- Message-based operations system interface X.25, TCP/IP, or OSI/LAN to support TL1 commands
- Office alarms
- Parallel telemetry
- User-settable miscellaneous discrete input
- Operations system interface (IAOLAN).

CenterLink-CIT

The CenterLink-CIT is a personal computer in which Metropolis® EON CIT software has been installed. The CenterLink-CIT uses Microsoft® Internet Explorer to provide a user-friendly operations interface. The CenterLink-CIT provides detailed information and system control for specialized local and remote maintenance and administrative activities; it supports one network element (NE) at a time. You must use the CenterLink-CIT if you are installing or accepting a system.

The CenterLink-CIT supports local access, remote access using a modem, and remote access using the data communications channel (DCC). Metropolis® EON provides enhanced security features to protect against unauthorized access to CIT system functions (for example, provisioning). Security includes logins, passwords, CIT port disabling/enabling, and authorization levels for the system capabilities.

The CIT provides the following functions:

- Reporting
- Testing
- Initializing performance-monitoring storage registers
- Provisioning.

The following are the minimum requirements for the CenterLink-CIT:

- Pentium® desktop or laptop PC (66 MHz clock speed or greater)
- 16 Mb RAM
- 20 Mb of available hard disk space
- 800 x 600 or higher resolution VGA monitor
- Microsoft Mouse or compatible pointing device
- 2x CD-ROM Drive
- 16 bit sound (optional)
- Windows 95®, Windows 98®, Windows NT®, Windows 2000®, or higher operating system
- Microsoft® Internet Explorer, Version 4.0 or higher
- Serial port (EIA-232-D) — configured as COM1 or COM2
- Microsoft® Personal Web Server

Important! A dumb terminal can be connected to the CIT ports on Metropolis® EON for experienced TL1 users. However, CenterLink-CIT is highly recommended.

CIT Access

Metropolis® EON provides two CIT ports compatible with the ASCII EIA-232-D standard. The first port is configured as data communications equipment (DCE) for direct CIT access. The second port, found on the interconnection panel, is configured as data-terminating equipment (DTE) to permit connection to a modem or an RS-232 switch.

A digital data network may be used in place of the modem pair to provide remote dial-up access to Metropolis® EON from the CIT. A 9600 baud modem or digital data network must support full duplex, asynchronous, and byte serial data transmission of 8-bit bytes with one start bit and one stop bit.

Operations Domains

The operations domain for Metropolis® EON allows remote access to any Metropolis® EON NE in the same management subnetwork. The Metropolis® EON management subnetwork includes all end terminals, ring terminals, and repeaters interconnected with each other and managed via the DCC of the same element management system (EMS). The management subnetwork may originate/terminate at two single-facing end terminals, two single side equipped dual-facing end terminals, or in a ring made of ring terminals, end terminals, and repeaters.

To illustrate remote access within an operations domain, the following figure shows CenterLink-CIT logins at various Metropolis® EON sites. A CenterLink-CIT login at an end terminal allows remote access to the other end terminal and all repeaters between them. Here, a CenterLink-CIT login at Metropolis® EON X.1 allows remote logins at sites X.2 and X.3. In Release 4.0 and later releases, this is true when X1, X2 and X3 are in the same level 1 area. Remote login is supported within the same level 1 area only.

Figure 6-1 CIT Operations Domain with Standard End Terminals

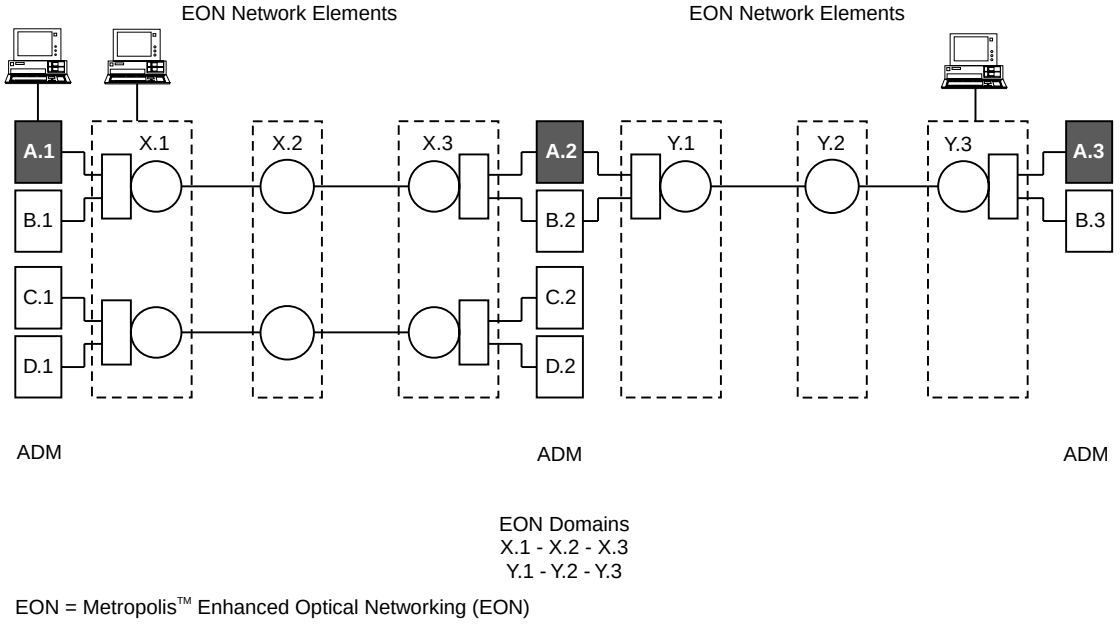

With a dual-facing shelf, the operations domain can be extended to additional Metropolis® EON network elements (NEs). The following figure shows a dual-facing terminal at an intermediate add/drop site; a CenterLink-CIT login at Metropolis® EON X.1 now allows remote logins to X.2, X.3, Y.1, Y.2, and Y.3. In Release 4.0 and later releases, X.1, X.2, X.3. Y.1, Y.2 and Y.3 must be in the same Level 1 area for this to work. Remote login is supported within the same level 1 area only.

Figure 6-2 CIT Operations Domain with Dual-facing End Terminal

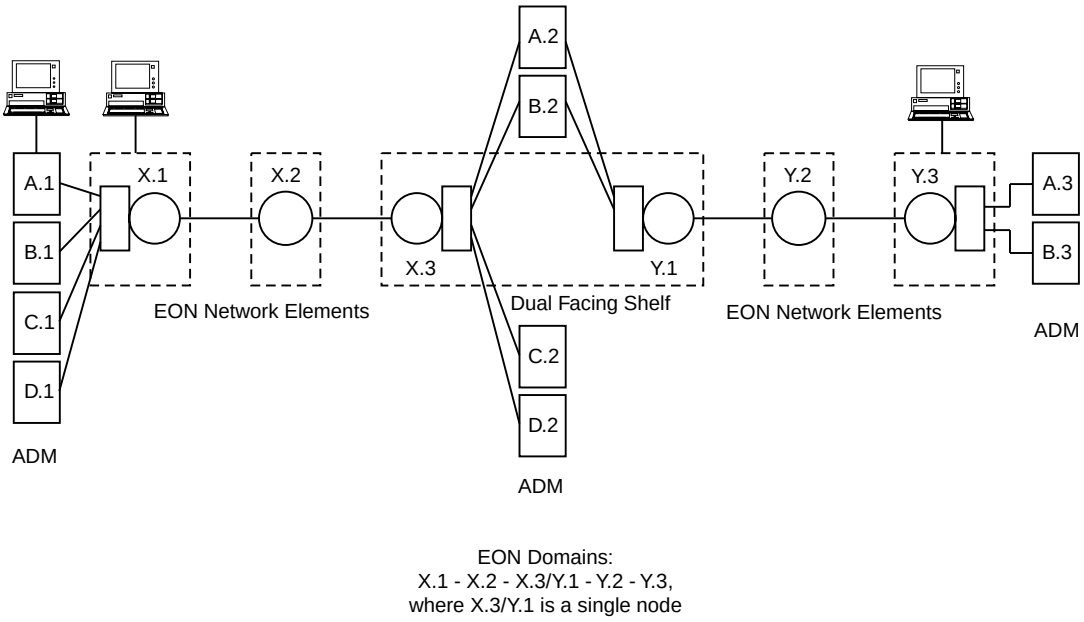

EON = Metropolis™ Enhanced Optical Networking (EON)

nc-metro-008

The operations domain may be extended across NEs in two ways. If the ring terminals are configured as dual-facing, the operations domain is extended as shown in Figure 6-2, “CIT Operations Domain with Dual-facing End Terminal” (6-5). If the ring terminals are configured as dual bays, an IAOLAN is used to extend the operations domain across the ring terminal. This is similar to that shown in Figure 6-2, “CIT Operations Domain with Dual-facing End Terminal” (6-5) except there is no dual facing shelf; the connection between X.3 and Y.1 is an IAOLAN. A CenterLink-CIT login at site X.1 also allows remote logins to sites X.2, X.3, Y.1, Y.2, and Y.3 when these nodes are in the same Level 1 area.

Message-Based Interface

Metropolis® EON supports a TL1 message-based operations systems interface. This interface uses the X.25, TCP/IP, OSI/LAN protocol to provide communications with a message-based operations system and supports Transaction Language 1 (TL1). A message-based operations system allows access to the local Metropolis® EON terminal (local access capability) and any remote terminals in a maintenance management subnetwork using the DCC (GNE capability). Refer to the *Metropolis®* Enhanced Optical Networking (EON), *Operations Systems Engineering Guide (OSEG)* for more details.

Metropolis® EON provides pre-defined sets of OS types. An OS type is a filter that determines the types of TL1 autonomous messages that appear at a port in addition to TL1 commands and responses. The types include:

- *Maintenance*– sends reports on the maintenance status of the system (for example: alarm and event reports)
- *Memory administration*– sends reports on changes in the provisioning status of equipment (for example: database changes)
- *Command response only*– sends no autonomous messages (you can manually request information through TL1 commands)
- *Other*– sends all autonomous messages
- *Peer*– automatically sets peer as the OS type if the user provisions none of the other OS types (if the OS type is peer, messages are in the form of commands and responses)
- *Restoration*– sends the same system status reports as the *maintenance OS type*, except TCAs and user command information.

IAOLAN

When IAOLAN is used, robust data communications can be established for the Metropolis® EON network. The IAOLAN Interface feature using IS-IS Level 2 routing enables larger Metropolis® EON management domains and increases the robustness of the management network.

With IAOLAN functionality areas are managed — not clusters. Areas differ from clusters in that routing between management areas is permissible; thus reducing the number of physical connections needed between the management system and the Metropolis® EON network while increasing survivability of the management network.

A single area with up to 50 nodes can be managed. A mechanism for growing the network beyond 50 nodes is to split the network into multiple areas and then establish links between areas. These links are configured Metropolis® EON nodes in an area (referred to as Level 2 nodes) that are responsible for linking the areas. An integrated network composed of IS-IS Level 2 areas will provide a more flexible, cost effective and robust environment to provide access from the EMS to each managed NE. This feature provides the capability for current networks that are less than 32 nodes to grow beyond 32 nodes without requiring the addition of clusters.

Miscellaneous Discrete Interface

The state of the miscellaneous discrete inputs can be reported on demand to a remote operations center via the CIT. Miscellaneous discrete state changes are autonomously reported by the TL1 interface. Sixteen inputs and four outputs are available. One hundred twenty-eight additional inputs and thirty additional outputs are supported using an optional external miscellaneous discrete unit (EMDU), available from Dantel, Inc. or Harris Corp. This optional EMDU can be connected to the serial telemetry interface of Metropolis® EON to provide an additional set of miscellaneous discrete input and output points.

The EMDU allows an operations system to control and monitor equipment colocated with Metropolis® EON through a set of input and output contact closures. One hundred twenty-eight additional user-settable inputs that can monitor external conditions like open doors or high temperature. The additional thirty-two user-settable outputs can control equipment such as external fans and generators.

Operations Interface Connectivity

In previous releases, the OI domain had been limited to the set of end terminals plus intermediate repeaters and extended with dual-facing end terminals or the Telemetry Feed-through feature. OI connectivity was provided through the use of the SONET DCC bytes present in the supervisory channel that is multiplexed/demultiplexed in each optical section between Metropolis® EON NEs. In Release 8.0. Metropolis® EON also supports a 10BaseT LAN interface to extend the operations domain within a ring or between rings.

The DCC bytes are (de)multiplexed by the TLM circuit packs, with one TLM circuit pack in each end terminal and two in each repeater and ring terminal. The TLM circuit packs also provide user access to other parts of the SONET overhead such as orderwires (E1 and E2 bytes). The TLM circuit packs route the DCC signals to the TOHCTL circuit pack for OSI stack and application processing. The DCC and other overhead bytes are 1x1 protected on a per-optical section basis. This feature expands the domain of the OI applications to include NEs other than those in the local fiber span by adding hardware and software that provide a 10BaseT, IEEE 802.3 LAN interface.

Based on the configuration in which it is installed (Repeater or End/Ring Terminal), the TOHCTL (LEA102) circuit pack automatically determines whether to process the signals from slot TLM-1B or slot IAOLRP as SONET DCC or as IAOLAN-specific.

Software Download Using FTAM

The NE reports the occurrence of the alarm software download in progress via the TL1 command, REPT ALM when the requested file(s) transfer begins. The NE reports the clearing of software download in progress via REPT ALM upon completion/termination of the requested file(s) transfer. If the software download is successful, the NE reports that the event (non-alarmed condition) software transfer as successful in the TL1 command REPT EVT COM message.

The NE also reports the occurrence of the alarm SYSMEM/SYSCTL code mismatch via REPT ALM if a software mismatch has been detected between the:

- software stored in the SYSMEM circuit pack, and
- the software version running in the NE.

If the software download has failed, the NE reports that the event (non-alarmed condition) software transfer failed in the TL1 command REPT EVT COM message. The NE also reports the occurrence of the alarm SYSMEM unrecognizable code via REPT ALM.

Circuit Pack Faceplate LEDs

Each circuit pack has a red FAULT LED on its faceplate. A continuously lighted FAULT LED means that Metropolis® EON has isolated a failure in that circuit pack. A flashing FAULT LED has two meanings:

- On a transmission circuit pack, it indicates that an incoming signal to that circuit pack has failed
- On the system memory (SYSMEM) circuit pack, it indicates that the contents of the nonvolatile memory differs from the duplicate copy in the system controller (SYSCTL) circuit pack. It can also indicate corrupted data in the nonvolatile memory of the SYSMEM circuit pack.

In addition to a red FAULT LED, an OTPM/OTPM25 circuit pack also has a green LED on its faceplate. This LED indicates that an OTPM/ OTPM25 port is in-service.

The OUPSR has 4 LEDs labeled:

- CP Failure,
- SIG Status,
- A Status, and
- B Status

The following table shows a list of monitored conditions for the OUPSR and the fault LED activity.

Table 6-1 OUPSR LED States for Failure Conditions

Failure Condition	Circuit Pack Failure LED	Sig Status LED	A Status LED	B Status LED
Signal fail (A in, B in, or SIG in)	On (flashing)			
LOS on SIG in		On (red)		
LOS on A in			On (red)	
LOS on B in				On (red)

The following table shows a list of monitored conditions for the OUPSR and the good signal LED activity.

Table 6-2 OUPSR LED States for Good Signals

Good Signal	Sig Status LED	A Status LED	B Status LED
SIG in	On (green)		
A in active, B in standby		On (green)	Off
B in active, A in standby		Off	On (green)

The following table shows a list of the monitored conditions for the 2:1 data muxing OTU (2DM25) and the related LED activity.

Table 6-3 Data Muxing OTU LED States

Monitoring Point	Failure	Normal	No Signal
Client in, Port 1	Red	Green	Unlit
Client in, Port 2	Red	Green	Unlit
High Speed Port, In	Red	Green	Unlit
Circuit pack	Red	Unlit	Unlit

□

Administration

Introduction

This section provides information on Metropolis® EON administration features.

Version Recognition

Metropolis® EON provides automatic version recognition of all installed hardware and software, reporting the type, version, and serial number of the circuit pack installed in each slot. Each circuit pack CLEI™ code and serial number is stored on the circuit pack and is accessible by the system controller circuit pack (SYSCTL). The equipment catalog item (ECI) version identification and apparatus codes for each circuit pack are also provided.

The Optical Multiplexer Unit (OMU) and Optical Demultiplexer Unit (ODU) units have four discrete leads that are used by the Optical Amplifier (OA) to determine the circuit pack's version and type.

Security

Metropolis® EON provides three tiers of security to protect against unauthorized access to the CIT and OS functions (for example, provisioning). The three tiers are:

- Port security
- NE login security
- Enhanced user login security.

Port Security

In CenterLink-CIT mode, port security is provided through the CIT interface. Port security controls access to the system through a per-port enable/disable mechanism and inactivity time-outs.

Network Element Login Security

This feature controls access to the system through a lockout mechanism that disables all but administrative logins.

Enhanced User Login Security

The following features control access to the system on an individual user basis:

- Function category– commands are separated into the following four function categories:
  - Configuration Management (C)
  - Fault Management (F)
  - Performance Monitoring (PM)
  - Security Management (S)
- User authorization levels– five user authorization levels are provided within each function category to control which NE functions a particular user may perform (based on login ID). The five authorization levels are:
  - Expert (Level 5): provides access to all commands and options. Only expert users have access to the security and access functions. These functions include assigning and changing logins/passwords, setting login/password aging times, enabling/disabling ports, setting TID names, and rebooting the system
  - Privileged (Level 4): provides access to all commands and options except those that may affect all service at once
  - General (Level 3): provides access to all commands except those relating to security and system access
  - Basic (Level 2): provides access to commands used to carry out minimum administration work for the system
  - Reports-only (Level 1): provides access to the reports only. The reports only users are not allowed to change any of the system provisioning values.
- Login ID and password assignment– requires the user to enter a valid login ID and password to access the system. Metropolis® EON allows up to one hundred login IDs and passwords. Two of these login IDs are privileged and the remainder are reports-only and general

Users may execute any command within the limits of their authorization level and function category, including all commands on levels below them. For example, a user with Authorization Level 4 in the Security Management function category (S4 status), can execute commands in levels 4, 3, 2 and 1 of Security Management.

- Login aging– enables a privileged user to set individual *non-expert* logins to be deleted if unused within a certain number of days or by a particular date (for example, for a visitor or for temporary access during installation)
- Password aging– enables a privileged user to require each user to change his or her password periodically
- Autonomous indications and history log records– provides autonomous indications and history log records for security auditing of successful/unsuccessful logins and intrusion attempts
- Guest login– enables a privileged user to set a temporary login that is automatically deleted after a specified amount of time.

Equipment Inventory

Metropolis® EON maintains an automatic inventory equipment list of circuit packs in the shelf. The list contains serial numbers and CLEI codes. The inventory is automatically updated when a new circuit pack of the same type is inserted.

System Start-up

System start-up is an initialization process that identifies all nodes in a Metropolis® EON subsystem and establishes communications. Start-up is triggered by the following actions:

- A Metropolis® EON subsystem is started for the first time
- A node is added or deleted
- The SYSCTL in a neighboring node is replaced
- A node is reset.

□

Maintenance

Introduction

This section describes Metropolis® EON maintenance. The objective of Metropolis® EON maintenance is to detect failures, monitor facility performance degradation, isolate faults to specific circuit packs, and report to an OS and/or raise alarm indicators. Maintenance consists of reactive maintenance and performance monitoring. Reactive maintenance identifies a failure after it occurs. Performance monitoring identifies transmission degradation before it causes a service-affecting condition.

Release 8.2 introduces the capability to monitor incoming signals and report discrepancies between provisioned bit-rates and actual bit rate. Discrepancies are reported using a bit-rate mismatch alarm. The severity of this alarm is provisionable.

Reactive Maintenance

Reactive maintenance features identify failures after they occur. Reactive maintenance conditions detected by Metropolis® EON are:

- Signal failures
- Equipment failures.

Proactive Maintenance

Proactive maintenance refers to the process of detecting degrading conditions not severe enough to initiate alarming, but indicative of degradations that may lead to hard failures. Proactive maintenance conditions detected by performance monitoring are:

- B2 parity errors
- 8-bit/10-bit coding violations
- Out of range (OOR) on Laser Bias Current (LBC) and Laser Backface Current (LBFC)
- Single fuse failure on -48 V feeders
- Threshold crossing alert (TCAs).

If a proactive maintenance condition is detected, maintenance activities should be scheduled to isolate and correct the condition and avoid service-affecting failures.

Remote Maintenance

Remote maintenance is provided through DCC links between Metropolis® EON NEs. Remote access lets you perform maintenance at a remote site as if you were local to that site. This capability provides operations support from a single location to local and remote Metropolis® EON NEs.

Metropolis® EON uses an additional optical signal, the supervisory signal, for communication of maintenance information. This signal (2.048 Mb/s Manchester-encoded E1) is generated by the TLM circuit pack and multiplexed onto the optical line at each OA. This signal is demultiplexed at each OA and returned to the TLM circuit pack, providing an add/drop function for it at every Metropolis® EON site. Metropolis® EON uses the DCC channel (D1-D3) within the STS-3 format for Metropolis® EON communication. The customer is provided with the orderwire bytes (E1, E2, F1) and the payload contained in the 2.048 Mb/s signal.

Metropolis® EON uses the supervisory channel DCC to provide the following:

- *Craft interface terminal (CIT) remote access*– the local terminal provides a remote login capability from its CIT to a remote terminal
- *Indicator strip remote activity*– the indicator strip/user panel provides a far-end activity (FE ACTY) LED to show that one or more remote terminals have a lighted near-end activity (NE ACTY) LED
- *Operations system remote access*– a message-based operations system (X.25, TCP/IP, or OSI/LAN) can access local and remote Metropolis® EON elements
- *Alarm report remote access*– the local terminal provides a summary alarm report that indicates the highest active alarm, if any, at all remote NEs in the same alarm group
- *Remote software copy*– this feature allows you to copy software from one Metropolis® EON element to another anywhere in the management subnetwork.

Gateway Network Element

You can use one or more Metropolis® EON NEs as a gateway network element (GNE). The GNE serves as a single interface to the local X.25, TCP/IP, and OSI/LAN message-based operations system covering all Metropolis® EON elements in the same management subnetwork.

The GNE receives operations information from these NEs through the DCC and reports that information and its own to the operations system.

One or more Metropolis® EON terminals can be used as GNEs, but the number used depends on your application and operations needs. For example, to reduce the number of operations data communication links between the network and operations system, you might choose to use only one Metropolis® EON terminal as the network GNE. If you need redundancy, then two Metropolis® EON elements could be used as GNEs.

Remote NE Status

Through the DCC, a Metropolis® EON terminal can receive and transport summary alarm and status information from remote Metropolis® EON terminals that are in the same management subnetwork.

The remote NE status feature conveys remote summary alarm and status information through the following:

- Logical ORing of local and remote office alarms
- A set (CR, MJ, MN) of far-end parallel telemetry relays
- A far-end activity LED
- A network alarm report that indicates the highest active alarm severity at other NEs in the management subnetwork.

Members of an alarm group exchange remote NE status information through one or more alarm group NEs (AGNEs) that are defined in the same alarm group. The AGNEs and remote NEs use the DCC to receive and report alarm status information from and to all NEs in the alarm group. When an AGNE receives alarm and status information, it rebroadcasts the information to other NEs in the group. The information allows each NE to provide, for example, far-end activity indications and a remote alarm report for all other NEs in the group.

The use of AGNEs makes it unnecessary for each NE in an alarm group to communicate directly with every other NE in the group. This allows DCC resources to be used efficiently.

Local and Remote Software Copy/Upgrades

Metropolis® EON lets you upgrade system software at a local or remote site. System monitoring and control are fully functional during the upgrade. To upgrade software at the local NE, use the DCE port and installation software distributed with the generic. Remote software download is performed over TCP/IP. See the Software Release Description (SRD) for performing an upgrade.

Using CenterLink, you may also copy/upgrade the system software contained in a Metropolis® EON terminal to other local or remote terminals in the same management subnetwork. System monitoring and control are fully functional during the copying process.

Optical Transmission Maintenance

Metropolis® EON transmission maintenance is based on the following three-tier approach to performance monitoring of optical parameters:

- First tier– functioning of the Threshold Crossing Alert (TCA) which uses a provisionable delta threshold
- Second tier– use of predetermined threshold values to indicate signal degradation
- Third tier– use of predetermined threshold values to indicate signal failure conditions.

Metropolis® EON is an analog system. The following features are used to support maintenance of the analog transmission:

- Tones– are used to determine the power of the optical signal
- Supervisory signal– carries the DCC for internodal communication and out- of-band messages
- Optical line ID– is carried by the supervisory signal. It is an integer associated with a line. This ID is transmitted and received by each Metropolis® EON NE to identify any misconnection of fibers between sites.

Protection of DCC

Metropolis® EON provides automatic protection for the DCC signal. In 2-fiber closed ring applications, Metropolis® EON provides protection of the DCC channel via the OSI stack protocols. The TOCTL performs rerouting of the OSI messages. The DCC is the only protected part of the signal on the primary supervisory channel.

Automatic Detection of Facility Failures

Metropolis® EON continuously monitors the performance of the optical signal and the health of the circuit packs. Any failures or degradations are automatically detected and reported.

Optical Facility Failure Conditions

The optical facility failure conditions based on detected defects are as follows:

- Optical Channel Loss of Signal (LOS)– An optical channel LOS is declared when the signal power of the channel (SPR-C) falls below a specified level of the strongest SPR-C present. When there is only one channel, the optical channel LOS is declared when the SPR-C falls below a specified absolute level
- Optical Line LOS– If all the optical channels in an optical line and the supervisory channel have LOS, a correlation of defects results in an optical line loss.

The Alarm Severity for LOS is provisionable in SONET networks as Critical/SA, Major/NSA, or Minor/NSA. For SDH networks the LOS is provisionable as Critical/SA, Prompt/NSA, or Deferred/NA. In addition, a remote defect indication (RDI) signal will be sent upstream to the transmitting terminal. The RDI signal is generated using the K1-byte of the supervisory channel.

Digital Facility Failure Conditions for Supervisory Signal

The digital facility failure conditions for the supervisory signal are as follows:

- Supervisory signal (SUPR) loss of signal (LOS)
- SUPR loss of frame (LOF)
- SUPR signal failure (SF)
- SUPR signal degrade (SD).

Fault Isolation

Metropolis® EON continuously monitors circuit packs and incoming signals for defects. When a fault is detected, it employs automatic diagnostics to isolate the failed circuit pack or signal. Failures are reported to local craft and operations systems so that repair decisions can be made. If desired, operations system personnel and local craft can use the CIT to gain more detailed information on the fault condition.

All fault conditions detected and isolated by Metropolis® EON are stored and made available for reporting, on demand. In addition, a history of the past 500 alarm and status conditions and command events is maintained and available for on-demand reporting. Each event is date and time stamped. Metropolis® EON detects and reports alarm and status conditions autonomously through the office alarm relays, indicator strip, equipment LEDs, parallel telemetry, and message-based operations systems.

Per-Channel Protection Switching (OUPSR)

Protection switching occurs based on channel presence and power as determined by optical monitoring of the received spectrum.

The Optical Unidirectional Path Switched Ring (OUPSR) circuit pack performs the transmit bridge and receive switch operation for a single wavelength routed over diverse paths as shown in the following figure.

Figure 6-3 OUPSR with Single-Mode or Multi-mode Interface

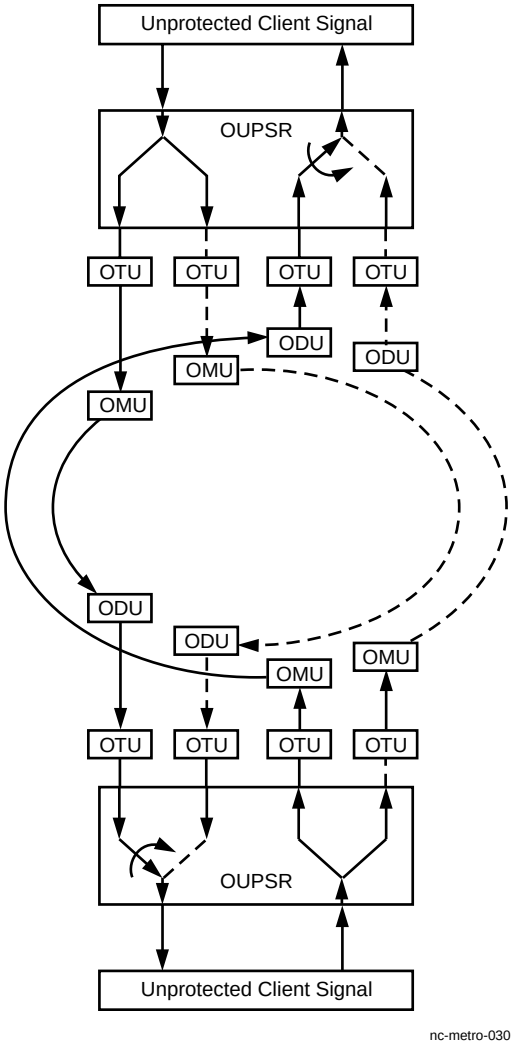

The Release 8.0 architecture (see the previous figure) requires two add and two drop OTUs for a total of 4 OTUs per OUPSR circuit pack at each office. This provides full redundancy of all equipment between the OUPSR circuit packs and full monitoring of both optical paths.

The Release 8.2 architecture supports one add and one drop OTU at each office as shown in the following figure.

Figure 6-4 OUPSR with Single-mode Interface

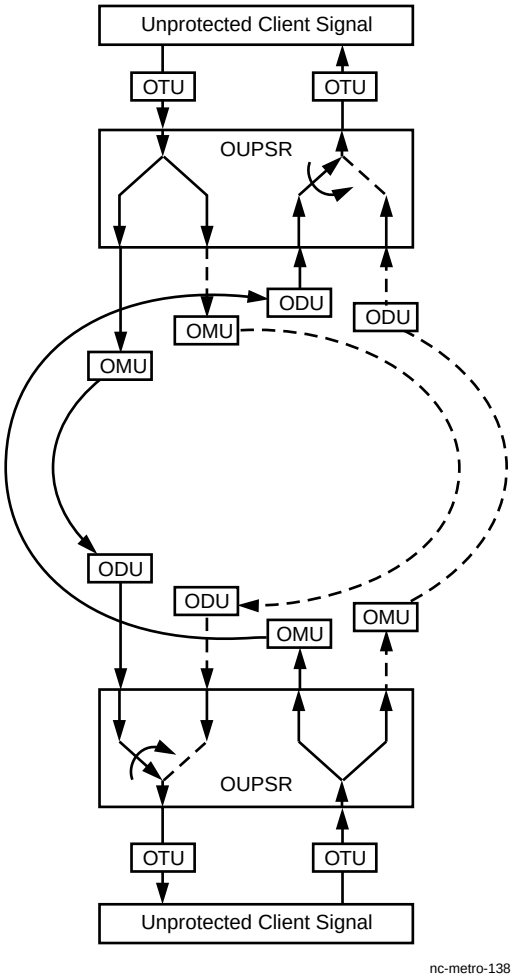

Switching occurs not just on LOS, but also on SD. For data signals 8B/10B encoding is accessed to determine coding violations and SD. Note that LSBB OTU (44AxB) and GbE OTU (41Fx) do not detect signal degrade (SD). The OUPSR will switch on LOS, but not SD, if equipped with these two OTUs. In addition, the LSBB OTU (44AxB) is not supported with the OUPSR in 16-channel applications using OAs such as the LEA7B and LEA107B.

Automatic Power Shutdown and Restart (APSD)

Metropolis® EON uses APSD as an equipment safety mechanism. The APSD feature protects against optical surges and possible human exposure to powerful Metropolis® EON output by reducing power to Hazard Level 1on the optical line between adjacent offices.

The following high power links exist in a Metropolis® EON system along which APSD can occur:

APSD timing requirements are as follows:

- Shutdown = < 3 seconds
- Restart = < 5 seconds.

Important! The link between an OA and the ODU at the receive-end OA should be protected as well. In this case, an LBO needs to be installed during system installation to ensure that power levels never exceed IEC Class 3A).

APSD in Two-OA Operation

The following information describes various network reliability scenarios in which the APSD feature can be used for two-OA operation.

Scenario 1 (Shutdown): Protection on an optical line link between Metropolis® EON *terminals.*

In the following figure, if a fiber cut occurs in a span between two Metropolis® EON End Terminals or Repeaters, “OA2” in the downstream Metropolis® EON detects a loss of optical power and starts operating in a 0 channel setting. The downstream Metropolis® EON sends an APSD-FE message to the upstream terminal to inform it of the condition. Upon detecting the message, the upstream terminal powers down to safety levels prescribed by IEC and ANSI standards. Powering down of “OA1” and “OA3” to Class 1 levels is completed within 3 seconds of the fiber cut.

Figure 6-5 APSD for Optical Line Failure Between Terminals (Two-OA)

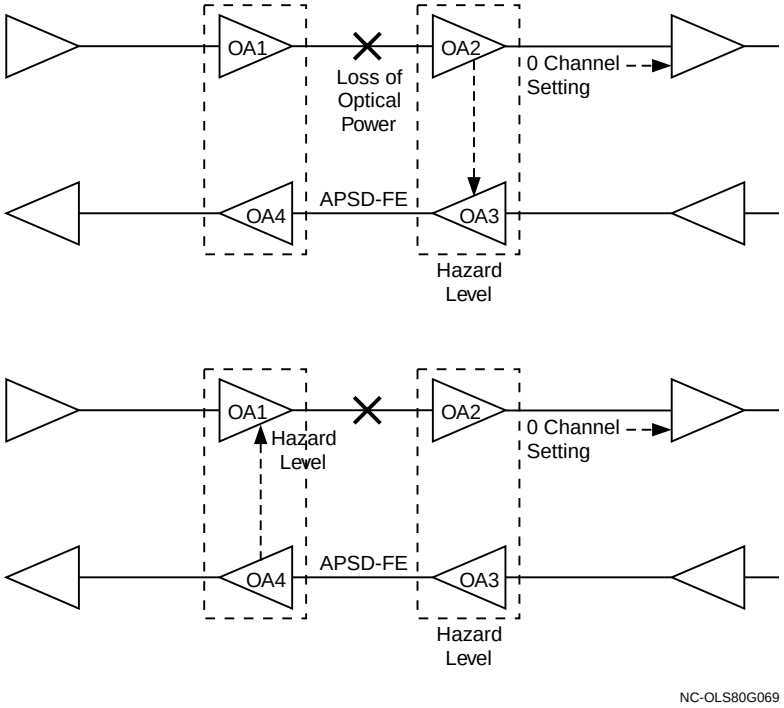

Loss of optical power is declared when the OA detects a loss of all channels (including the telemetry channel) and the telemetry circuit pack detects an incoming SUPR LOS. The OAs downstream from “OA2” also experience channel loss. These amplifiers operate in 0 channel power configuration within one second of a fiber cut occurring. The OAs downstream from “OA4” experience a decrease in incoming power and may or may not declare loss of channels. Simultaneously, the OAs upstream from “OA1” and “OA3” continue to operate in normal mode.

Scenario 2: Restarting on an optical line link between terminals.

In the following figure, when the link between “OA1” and “OA2” is restored, the downstream Metropolis® EON clears the power loss condition and then notifies the upstream terminal of the correction. The upstream terminal then reverts “OA1” back to normal power. Provided there are no failures upstream, the downstream terminal also turns “OA3” back up. “OA1” and “OA3” adjust to normal power within one second of start-up.

Figure 6-6 Restart on an Optical Line Link Between Terminals (Two-OA)

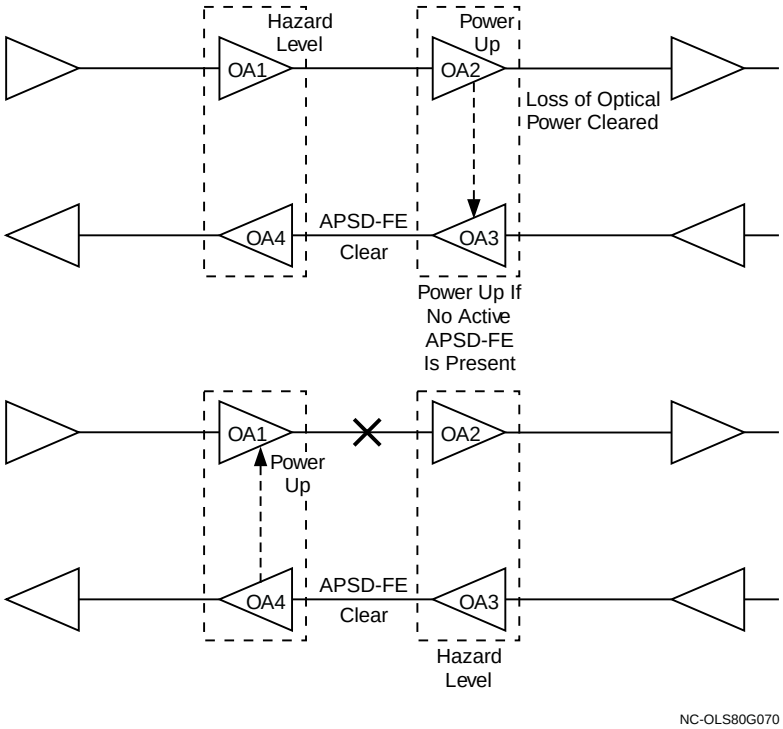

APSD in Single-OA Operation

The following information describes various network reliability scenarios in which the APSD feature can be used for single-OA operation.

Scenario 1: Protection on an optical line link between terminals

The following figure shows protection on an optical line link between terminals in a single-OA configuration. Here, optical line LOS stems from supervisory LOS detected by the TLM circuit pack. This could result in false APSD triggers due to failures in the upstream TLM. However, these false triggers do not adversely affect overall network reliability.

Figure 6-7 APSD from Optical Line Failure (Single-OA)

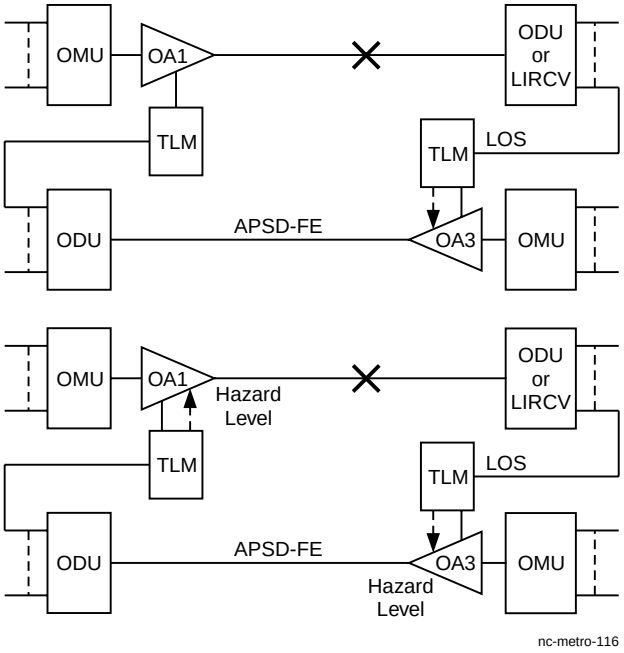

Scenario 2: Restarting on an optical line link between terminals.

The restart procedure for single-OA configuration is almost identical to Scenario 3. When the link between “OA1” and the ODU is restored, the telemetry circuit pack clears the LOS condition. It also clears the APSD-FE message on the supervisory output. The upstream Metropolis® EON detects the clearing of the message and instructs “OA1” to power up. Provided there is no active APSD-FE message from upstream, the downstream terminal powers up “OA3.” The following figure illustrates restarting in a single-OA configuration.

Figure 6-8 Restarting on an Optical Link Between Terminals (Single-OA)

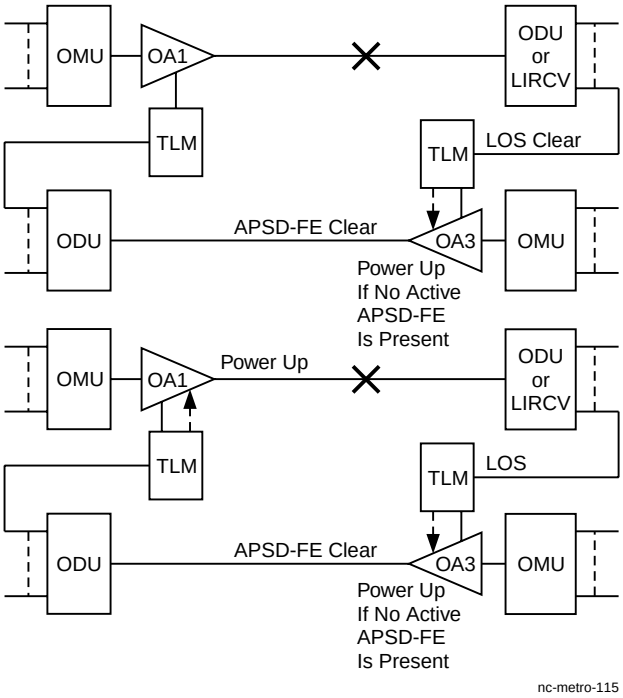

APSD Double Failure Contingencies

The following double failure contingencies exist with the APSD feature:

- If an incoming supervisory channel failure exists at an upstream Metropolis® EON, APSD cannot be activated.
- If an incoming supervisory channel with an active RDI condition fails, APSD cannot resume normal operation when it is activated. However, manual resumption of normal operation is possible.

Performance Monitoring

Metropolis® EON does performance monitoring as part of its proactive maintenance philosophy. Performance parameters include digital performance data (coding violation counts), threshold crossing alerts of analog parameters, and optical performance monitoring parameters. *Proactive maintenance* refers to the process of detecting conditions not severe enough to initiate alarming, but indicative of degradations that may lead to hard failures. The health of the individual signals, line, and overall system are monitored.

Optical Signal Monitoring Parameters

The health of each optical channel (including the OC-48/STM-16 transmitted by the muxing OTU and the client signals input into the muxing OTU) is monitored and reported by the OTUs/OTPMs transmitting and (optionally) receiving the channel as shown in the following table.

Table 6-4 Performance Monitoring of Optical Signals

Facility	Monitored Parameter
OC-3/STM-1 and OC-12/STM-4 OTPMs	B1 Coding Violations - CV
	B1 Errored Seconds - ES
	B1 Severely Errored Seconds - SES
	B1 Severely Errored Frame Seconds - SEFS
OC-48/STM-16 OTUs/OTPMs	B1 Coding Violations - CV
	B1 Errored Seconds - ES
	B1 Severely Errored Seconds - SES
	B1 Severely Errored Frame Seconds (SEFS)
	Laser Bias Current (LBC)

Facility	Monitored Parameter
	Optical Power Transmitted (OPT)
	Optical Power Received (OPR)
LSBB and ELSBB (all signals)	Optical Power Received (OPR)
UBB	Laser Bias Current (LBC)
	Optical Power Transmitted (OPT)
	Optical Power Received (OPR)
	Disparity Error – Coding Violations (CVS)
UBB (only signals with 8bit/10bit encoding)	8bit/10bit Errored Seconds (ES)
	8 bit /10bit Severely Errored Seconds (SES)
	8bit /10bit Severely Errored Frame Seconds (SEFS)
Muxing OTU output	All OC48/STM16 monitored parameters
Muxing OTU input	Optical Power Received (OPR)
	8bit/10bit Errored Seconds (ES)
	8bit /10 bit Severely Errored Seconds (SES)
	8 bit /10 bit Severely Errored Frame Seconds - (SEFS)
OC-192/STM-16 OTU	Optical Power Received (OPR)
	Optical Power Transmitted (OPT)
	Laser Bias Current (LBC)
	FEC Error Count
	FEC Uncorrectable Block Count
	B1 Coding Violations (CV)
	B1 Errored Seconds (ES)
	B1 Severely Errored Seconds (SES)
	B1 Severely Errored Frame Seconds (SEFS)

Optical Line Performance Monitoring Parameters

The health of the line is monitored and reported based on the following parameters:

- Laser bias current (LBC-P1, LBC-P2): the laser bias current from each OA pump is monitored and reported as “in-range” and “out-of-range.” An out-of-range condition causes pump shut-off. Some OAs have only one pump and some have two.
- Laser backface current (LBFC-P1, LBFC-P2): the laser backface current from each OA pump is monitored and reported as “in range” and “out of range”. Some OAs have only one pump and some have two.
- Signal power per channel (SPR-C): signal power per channel is monitored by measurements of tone power on a channel. Normalized values can be retrieved in a scale of 0 to 100. TCAs are reported when thresholds are crossed.
- Total optical power received (TOPR-OL): total optical power for all the channels is monitored and normalized values can be retrieved in a scale of 0 to 100. TCAs are reported when thresholds are crossed.

System Digital Performance Monitoring Parameters

The health of the system is calculated from signal and line parameters and carried as B2 parity information in the supervisory channel (SUPR).The telemetry (TLM) circuit pack can detect the following parameters regarding the computed health of the system:

- Line coding violation (CV-L) counts – the sum of B2 parity violations on the supervisory signal is an indicator of the line’s performance. The system calculates, writes, and checks the composite B2 parity for errors. For each line bit-interleaved-parity (BIP) error it detects, it increments the B2 parity violation counter.
- Line errored second (ES-L) counts – an ES-L is a second in which the system detects one or more B2 parity violations or an alarm indication signal (AIS).
- Line severely errored second (SES-L) counts – an SES-L is a second in which the system detects 32 or more B2 parity violations or a line AIS.
- Line unavailable second (UAS-L) counts – an UAS-L is a second in which the line is “unavailable.” A line is considered unavailable during loss of signal, loss of frame, and line AIS conditions.

This data is collected in 15 minute and 24 hour registers and is available for retrieval by operations interfaces. Thresholds are set on these parameters to show degraded performance. When a performance-monitoring threshold is crossed, it is reported to the operations system where all threshold crossings associated with a particular path can be correlated and the likely source of the degradation can be identified.

Performance Parameter Thresholds

The threshold for each performance monitoring parameter, except LBFC-P1, P2, and LBC-P1, P2, are provisionable. Whenever the threshold for a given performance-monitoring parameter is reached or exceeded, Metropolis® EON generates a TCA.

Performance Monitoring Data Storage

Metropolis® EON provides a current and 32 previous 15-minute registers and a current and 6 previous 24-hour registers for all accumulated performance parameters. Metropolis® EON enables you to provision the hour that the system is to begin measuring all daily performance monitoring periods. The performance monitoring parameters begin daily at the provisioned time. Metropolis® EON can retrieve and report the contents of any parameter storage register at any time. It can also initialize the current 15-minute and/or current 24-hour registers at any time.

Performance Monitoring During Failed Conditions

When a trouble condition is detected, Metropolis® EON stops accumulating affected digital performance parameters per Telcordia requirements. All unaffected performance parameters continue to be accumulated during the condition.

Threshold-Crossing Alert Transmission to an Operations System

Metropolis® EON supports the TL1 REPORT EVENT autonomous messages for TCA reporting. The TL1 messages provide information on the crossing of a CV, ES, SES, UAS, or Optical Power Received threshold for the current 24-hour and 15-minute registers.

Testing

Metropolis® EON provides turn-up tests to verify signal path continuity. These tests are a combination of automatic and manual tests designed to ensure that cables are correctly installed. Metropolis® EON

supports local installation self-tests which are used to check cabling within an NE. Fiber loopbacks are necessary for these local self-tests:

- Automatic turn-up test: verifies installation cabling to and from TLM and OA circuit packs for each optical line
- Manual local test: verifies the OMU and ODU are working properly. These tests require an optical power meter but do not require external line terminating equipment to drive the lines

Metropolis® EON also provides self-tests for office alarms, parallel telemetry, and LEDs.

Consistency Audits

Metropolis® EON NEs provide a function that monitors (audits) the consistency of the provisioning information. This function alerts you to situations that may result in lost traffic.

In particular, Metropolis® EON audits the following information to ensure consistent operation of the ring subnetwork as a whole:

- *Target Identifier (TID)*– the TID must be unique within a given management subnetwork for proper operation of the OS interface. Metropolis® EON uses a protocol called Directory Services to ensure the uniqueness of TIDs for all NEs in a management subnetwork. You can make changes to a TID at any time. However, if a change would result in a duplication, Metropolis® EON sends an alarm and does not put the change into effect until another change is made to remove the duplication.
- *32-Channel End terminal provisioning (1A-TX-32, 1A-RCV-32, 1A-TX-THRU-32, 1A-RCV-THRU-32, and DUAL)*– see “Metropolis® EON Terminal Provisioning” in this chapter for information on provisioning telemetry circuit pack orientation. At start-up and after each ENT-SYS command, Metropolis® EON checks to ensure that all nodes are provisioned as transmit or receive with respect to each other.
- *16-Channel End terminal provisioning (1A-TX, 1A-RCV, 1A-TX-THRU, 1A-RCV-THRU, and DUAL)*– see “Metropolis® EON Terminal Provisioning” in this chapter for information on provisioning telemetry circuit pack orientation. At start-up and after each ENT-SYS command, Metropolis® EON checks to ensure that all nodes are provisioned as transmit or receive with respect to each other.

Reports Generated

The following are the reports generated by Metropolis® EON:

Active Alarms and Status

Metropolis® EON provides a report showing all active alarm and status conditions. Immediately after logging in, Metropolis® EON automatically displays the local alarm and status report on the local and remote CIT. This report shows the following alarm levels.

- For SONET:
  - Critical (CR) alarm
  - Major (MJ) alarm
  - Minor (MN) alarm
  - Abnormal (ABN) status
  - Near-end activity (NE ACTY)
  - Far-end activity (FE ACTY)
- For SDH:
  - Critical (CR)
  - Prompt
  - Deferred
  - Abnormal
  - Info-N
  - Info-F

The source address and description of the condition (for example, controller failure and incoming high speed signal failure) are included in the report along with the date and time it was detected. The report also indicates if the condition affects service. The option to display specified subsets of conditions by severity is also provided.

Performance Monitoring Reports

Metropolis® EON provides reports that contain values for all requested performance monitoring (PM) registers. The start time of each register's recording period is included. The reports provide optical and digital PM data for optical lines, optical channels, and supervisory channels recorded in a series of 15-minute and 24-hour storage registers.

History

The history report displays the past 500 events. An event is any change in Metropolis® EON that may affect its performance (for example, a failure) or change its operational status (for example, loopback setup). This summary report includes time stamps showing when each condition was detected and when it was cleared. The user's initiated events contain a time stamp showing when the command was entered.

Version/Equipment List

The version/equipment list report is an on-demand report listing all the circuit packs that are present. This report also lists the circuit pack version and software generic (if applicable).

State

An on-demand report displays the state of each addressed slot and port in Metropolis® EON. For each addressed entity, the report includes the following:

- Address
- Circuit pack type (for slots only)
- Port state
- Slot state.

The possible port states are:

- Auto (AUTO)– the port is available for automatic provisioning. An optical channel transitions from the AUTO state to the IS state if a good signal is detected
- Not monitored (NMON)– the port is not monitored and will not transition to the IS state even if a good signal is detected
- In service (IS)– the port is fully monitored and alarmed.

The possible slot states are:

- Auto (AUTO)– the original value of the circuit pack slot state parameter. AUTO means the slot is available for automatic provisioning
- Equipped (EQ)– the slot is fully monitored and alarmed.

Orderwire

Orderwire provides voice communications through a DANTEL® unit for personnel performing facility maintenance. Metropolis® EON provides an EIA-422, 64 kb/s orderwire interface per optical line for the following:

- Section orderwire
- Line orderwire
- Section user channel.

Provisioning

Introduction

Provisioning is the assigning of values to parameters in memory. These parameters, in turn, affect the operation of the NE. Metropolis® EON provides two types of provisioning modes:

- Auto-provisioning: NE parameters that are provisioned automatically, based on the presence or absence of circuit packs and/or good incoming signals
- Technical provisioning: manual provisioning of parameter values via Technical Interface commands or the OS interface (TL1 command).

Parameters and Original Value Provisioning

Original values minimize installation provisioning. At the factory, each provisionable parameter is assigned an original value. The provisionable parameters and original values are copied (using CenterLink) from floppy disks to the system memory (SYSMEM) circuit pack.

Under normal conditions, three complete sets of data (parameters and their values) exist in the system. The first set, located in the nonvolatile memory of the SYSMEM circuit pack, contains the system parameters and their original values (values assigned to parameters at the factory). The second set, also located in the nonvolatile memory of the SYSMEM circuit pack, contains system parameters and their current values (values currently being used by the system). The third set, located in the volatile memory of the SYSCTL circuit pack, contains the system parameters and their current values.

> **Important!** The original values assigned at the factory cannot be changed. Current values can be overridden through local or remote provisioning.

Local or Remote Provisioning

Metropolis® EON software control allows local and remote provisioning of all provisionable parameters using CenterLink or the TL1 interface. Most of these parameters are also provisionable through TL1 commands. The provisionable parameters and values (current and original) are maintained in the nonvolatile memory of the SYSMEM circuit pack. For more information about provisioning parameters and original values using CenterLink or TL1 commands, refer to the *Metropolis®* Enhanced Optical Networking (EON) *User Operations Guide (UOG)*.

Preprovisioning Slots

To simplify circuit pack installation, slot parameters can be provisioned before the corresponding circuit pack is installed. All system parameters and values (current and original) are preserved by Metropolis® EON in the nonvolatile memory of the SYSMEM circuit pack. The parameters and values are protected by the nonvolatile memory if a power failure occurs and are retrievable on demand regardless of the means used for provisioning. The parameters are downloaded automatically when the affected circuit pack is installed.

Provisioning on Circuit Pack Replacement

Replacement of a failed circuit pack is simplified by Metropolis® EON slot provisioning. The system controller (SYSCTL) and SYSMEM circuit packs maintain a provisioning map of the entire system. When a transmission or timing circuit pack is replaced, the SYSCTL and SYSMEM circuit packs automatically download provisioning parameters and values to the new circuit pack.

Provisionable Parameters Summary

The following list shows a high level summary of provisionable parameters:

- End terminal type (1A-TX, 1A-RCV, 1A-TX-THRU, 1A-RCV-THRU, and DUAL)
- End terminal type (1A-TX-32, 1A-RCV-32, 1A-TX-THRU-32, 1A-RCV-THRU-32, and DUAL)
- NE access security (TID, port states, etc.)
- Login ID security (login IDs, log-in aging, etc.)
- Miscellaneous discrete attributes (names, alarm levels, etc.)
- Supervisory channel (SD threshold, alarm level, etc.)
- Performance monitoring thresholds (optical, digital) and start times
- Optical pump power
- Loss of Signal (LOS) Severity
- Reduction of OTU turn-on time
- Severity of bit-rate mismatch alarm
- Expected UBB bit-rate
- 10G with FEC or strong FEC
- Muxing OTU bit rate and interface (multi-mode 1310 versus single-mode 850 or 1310)
- Output power of LEA307 (normal or high)

For more information on provisioning parameters see the *Metropolis®* Enhanced Optical Networking (EON) *User Operations Guide (UOG)*.

Network Element Configuration

Metropolis® EON automatically provisions an NE as an end terminal or a repeater by detecting the presence or absence of the OMU and ODU circuit packs. If both are present, the NE is provisioned as an end terminal. If these circuit packs are absent and the slots are left empty, the NE is provisioned as a repeater.

Metropolis® EON Terminal Provisioning

During configuration of a single bidirectional optical line (not using single-OA operation), End Terminals and Repeaters are connected to the OA circuit packs in the 1A slot to establish the transmit direction. To establish the receive direction, terminals are connected to OAs in the 1B slot. Terminals on opposite ends from each other or terminals in a dual-bay ring terminal have opposite OA connections. The order of OMUs and ODUs are also arranged differently.

The telemetry (TLM) circuit pack has the same orientation. The outputs of the TLM packs are connected to the 1A OA circuit pack to establish the transmit direction. The 1A TLM circuit pack in the opposite end terminal is connected to the 1B OA circuit pack to establish the receive direction.

Since it is necessary to provision this circuit pack scheme for fault isolation, the end terminal with the 1A TLM-1A OA connection combined with all repeaters on the line are provisioned as “1A–TX” or “1A-TX-32” (transmit). The other end terminal is provisioned as “1A–RCV” or “1A-RCV-32” (receive). Dual-facing shelves handling 2-fiber applications are provisioned as “DUAL”.

The following figure shows Metropolis® EON End Terminal shelves with various configurations. A ring terminal may consist of two of these terminals or a dual-facing (16-channel) terminal. A 32-channel ring terminal consists of two end terminals.

Figure 6-9 Metropolis® EON End Terminal Shelves (fully equipped)

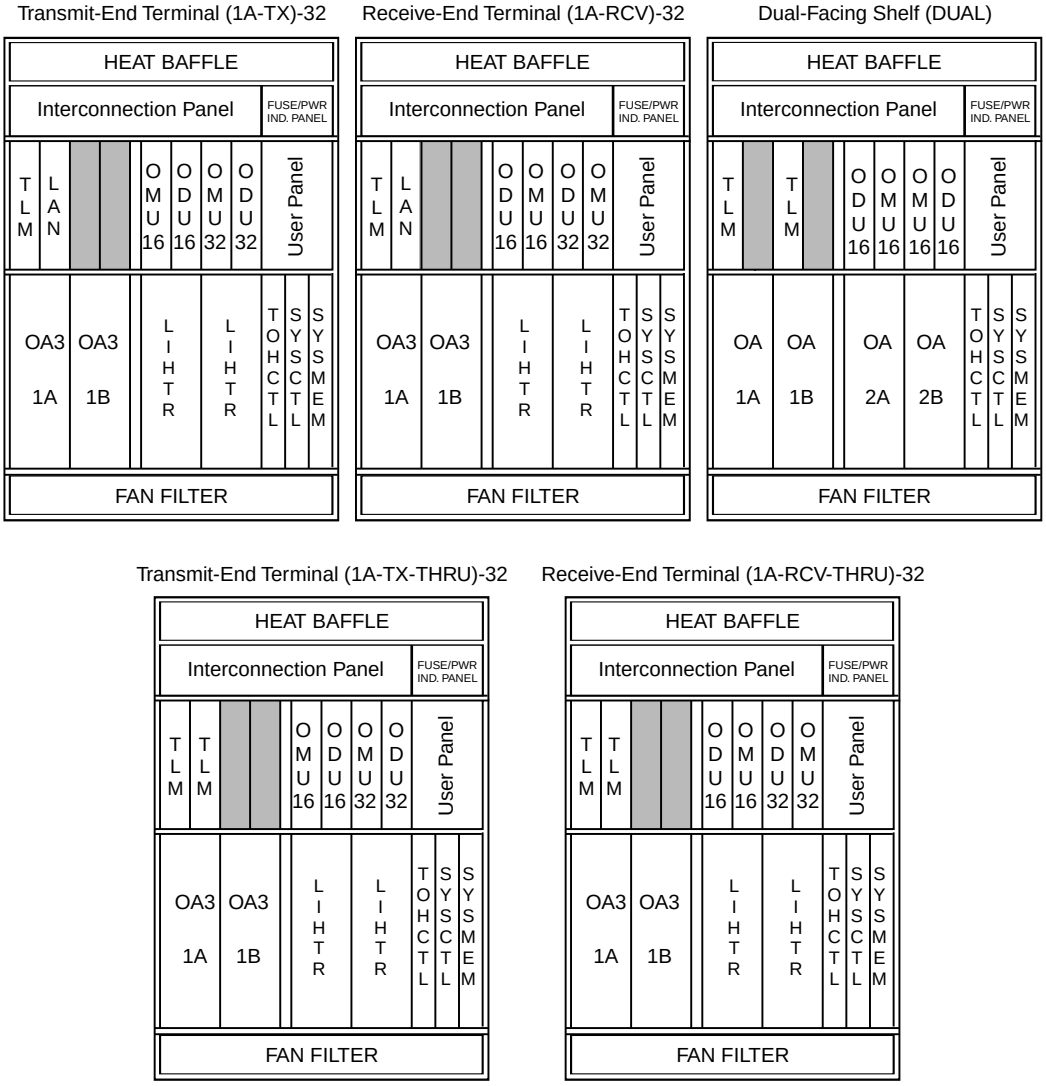

Dual-Facing Shelf

The Dual-facing Shelf allows the functions of colocated single-facing shelves to be combined so that only one shelf, recognized as a single NE, is used. In this application, OA lines 1A and 2B are used as receivers and OA lines 2A and 1B are used as transmitters.

> **Important!** The 32-channel system is limited to 16-channel add/drop in a terminal configured as dual-facing and allows the remaining 16 channels to pass through.

Refer back to Figure 6-1, “CIT Operations Domain with Standard End Terminals” (6-4) and Figure 6-2, “CIT Operations Domain with Dual-facing End Terminal” (6-5) for a depiction of the differences between 2-fiber Metropolis® EON operations with and without the Dual-facing Shelf feature.

□

7 Ordering

Overview

Purpose This chapter discusses the rules for ordering the building blocks and required materials for Metropolis® EON.

Organization This chapter is organized as follows:

1. Four tables in the "How to Order Metropolis® EON" section provide ordering rules by material category for each network building block. The first table covers the building blocks for Metropolis® EON control circuit packs. The second table covers the Metropolis® EON transmission circuit pack building blocks. The third table covers the Metropolis® EON miscellaneous building blocks. The fourth table identifies how pre-release 8.x and Release 8.x materials may be mixed.
2. The subsequent tables in the section, "How to Order Metropolis® EON" are dedicated to each material category (for example, terminal equipment, circuit packs, fibers, copper cables). Ordering codes and rules are provided for the material in each category.
3. The section, "Spares Guidelines and Ordering," is dedicated to the ordering of spare circuit packs, and includes FIT rate and comcodes/CLEI codes information.

Contents The following sections are included in this chapter:

How to Order Metropolis® EON	7-3
Spares Guidelines and Ordering	7-44

How to Order Metropolis® EON

Building Blocks

Metropolis® EON has three basic network building blocks:

- Repeater
- Ring Terminal
- End Terminal

Required Materials

The material required for these basic network building blocks may be categorized as follows:

- Terminal equipment
- Circuit packs
- Copper cables
- Fibers
- Lightguide Buildouts (LBO)s
- Apparatus blanks
- Labels
- Miscellaneous
- Software and documentation

Ordering Building Blocks

Table 7-1, Table-7-2, and Table 7-3 contain a list of Metropolis® EON equipment identified by function. The three columns represent the three network building blocks. The numbers in the columns identify the quantity of each piece of equipment required for each network building block.

Using Release 8.0/8.2 software, the customer may deploy a mix of pre-release 8.x and Release 8.x hardware. Table 7-4 depicts some allowed configurations utilizing a mix of pre-release 8.x and Release 8.x hardware.

Table 7-1 Metropolis® EON Control Circuit Pack Ordering

	Repeater	End Terminal			Ring Terminal	
					Single Bay	Double Bay
Terminal Equipment:	1		1		1	1
Control Circuit Packs:						
SYSCTL	1	1			1	2
SYSMEM	1	1			1	2
TOHCTL	1	1			1	2
OTCTL	0	1 or 2[1]			1 or 2[1]	2 or 4[1]
IAOLRP	0	As needed for OS/DCC connectivity.				2
TLM	2	1			2	2

Notes:

1. A Metropolis® EON shelf supports up to 2 OTCTL packs.

Table 7-2 Metropolis® EON Transmission Circuit Pack Ordering

	Repeater	End Terminal			Ring Terminal								
					Single Bay			Double Bay					
Terminal Equipment:	1	1			1			1					
Transmission Circuit Packs:		**Number of OAs**						**West - # OAs**			**East - # OAs**		
		0OA	**1OA**	**2OA**	**0OA**	**1OA**	**2OA**	**0OA**	**1OA**	**2OA**	**0OA**	**1OA**	**2OA**
OA2/OA3	2	0	1	2	0	2	4	0	1	2	0	1	2
LITX	0	1	0	0	2	0	0	1	0	0	1	0	0
LIRCV	0	1	1	0	2	2	0	1	1	0	1	1	0
OMU16	0	1			2			2					
OMU32	0	0 or 1			NA			0 or 2					
LIHTR	0	0 or 2			NA			0 or 4					
ODU16	0	1			2			2					
ODU32	0	0 or 1			NA			0 or 2					
OTU/OTPM - Drop	0	0 - 32			0 - 32			0 - 64					
OTU/OTPM - Add	0	1 - 32			1 - 32			1 - 64					
Per-Channel protection (OUPSR)	0	0			0 - 16			0 - 32					

Notes:

1. A Metropolis® EON shelf supports up to 2 OTCTL packs.

Table 7-3 Metropolis® EON Miscellaneous Ordering

	Repeater	End Terminal	Ring Terminal	
			Single Bay	Double Bay
Terminal Equipment:	1	1	1	1
Copper Cables:	As required. See section, “How to Order Copper Cables.”			
DCM:	As required. See section, “How to Order DCMs.”			
Fibers:				
OA-OMU/ODU - TLM Fiber	See Table 7-10.			
Metropolis® EON to LGX Fibers	4	4 - 68	8 - 72	8 - 136
OT-OMU/ODU Fibers	0	0 - 64	0 -64	0 - 128
OMU-ODU Fibers	0	0	0 - 32	0 - 64
LBO Kits:	See Table 7-12.			
Labels:	As required. See section, “How to Order Labels.”			
Miscellaneous:	As required. See section, “How to Order Miscellaneous Products.”			
Software and Documentation	1	1	1	2

Notes:

1. A Metropolis® EON shelf supports up to 2 OTCTL packs.

Pre-release 8.x and Release 8.x equipment may be mixed according to the feature and equipment listed in the following table.

Table 7-4 Allowed Mix of Pre-release 8.x and Release 8.x Hardware for Desired Feature

Desired Feature	Equipment Required
Per Channel Protection on 16-Channel System	OUPSR circuit pack
	TOHCTL LEA102
	Release 8.0 Software
	All other equipment may be pre-release 8.x and/or Release 8.x
32-Channel Capacity	OA2 or OA3
	OMU16 and ODU16; OMU32 and ODU32 (with LIHTR)
	TOHCTL LEA102
	TLM LDA4
	Release 8.0 Shelves
	Release 8.0 Software if OA2; Release 8.2 if OA3
	All other equipment may be Pre-release 8.0 and/or Release 8.0
Half-size 2.5G OTUs (OTPM25s)	OTPM25s 46A1-32 and 46B
	TOHCTL LEA102
	Release 8.0 Shelves
	Release 8.0 Software
	All other equipment may be pre-release8.0 and/or Release 8.0
Longer 1-OA Spans for 16-Channel System	OMU16 and ODU16
	TOHCTL LEA102
	LIRCV LEA209
	Release 8.0 Software
	All other equipment may be pre-release R8.0 and/or Release 8.0

Desired Feature	Equipment Required
ISC-3 in Peer Mode, ETR; other data services	47A1-32 (add OTPM UBBs) and 47B (drop OTPM DUBB)
	TOHCTL LEA102
	Release 8.0 Shelves
	Release 8.2 Software
	All other equipment may be pre-release 8.0.
ISC-2; other data services	44Cx and 44BC
	LEA102
	Release 8.2 Software
	All other equipment may be pre-release 8.0.
Two ISC-2, FICON, Fiber Channel, GbE, or ESCON on one OC-48/STM-16	41Mx
	LEA102
	Release 8.0 Shelves
	Release 8.2 Software
	All other equipment may be pre-release 8.0.
10G	41HxA, 41HB, 41HxC
	LEA102
	Release 8.2 Software
	Release 8.0 Shelves
	DCM carrier (if required)
	DCM modules (if required)
	LEA207 or LEA307
	All other equipment may be pre-release 8.0.

How to Order Terminal Equipment

The available ordering packages for Release 8.0 and pre-release 8.0 Terminal Equipment, as well as their related comcodes and drawings, are identified in the following table. These packages are described in Chapter 4.

Table 7-5 Metropolis® EON Terminal Equipment Packages

Network Building Block	Metropolis® EON Package	Comcode/Drawing/List Numbers
Repeater	Release 8.0 Miscellaneously Mounted Metropolis® EON Shelf	848818803 J68982C-1 L12
	Pre-Release 8.0 Miscellaneously Mounted Metropolis® EON Shelf	J68982C-1 L11
End Terminal	Release 8.0 Integrated Bay (single)	848796317 J68982D-1 L2
	Release 8.0 Miscellaneously Mounted shelf kit (single)	848802658 J68982D-1 L4
	Release 8.0 Miscellaneously Mounted Metropolis® EON shelf	848818803 J68982C-1 L12
	Pre-Release 8.0 Integrated Bay (single)	J68982D-1 L1
	Pre-Release 8.0 Miscellaneously Mounted Metropolis® EON Shelf	J68982C-1 L11
Ring Terminal	Release 8.0 Integrated Bay (single)	848790317 J68982D-1 L2
	Release 8.0 Integrated Bay (double)	848790325 J68982D-1 L3
	Release 8.0 Miscellaneously Mounted Shelf Kit (single)	848802658 J68982D-1 L4
	Release 8.0 Miscellaneously Mounted Shelf Kit (double)	848802641 J68982D-1 L5
	Release 8.0 Miscellaneously Mounted Metropolis® EON Shelf	848818803 J68982C-1 L12

Network Building Block	Metropolis® EON Package	Comcode/Drawing/List Numbers
Growth:	Release 8.0 Miscellaneously Mounted OT Controller shelf	848818811 J69000C-1 L15
	Release 8.0 Miscellaneously Mounted OT Complementary Shelf 1	848818787 J69000C-1 L16
	Release 8.0 Miscellaneously Mounted OT Complementary Shelf 2	848818795 J69000C-1 L17
	Pre-Release 8.0 Miscellaneously Mounted OT Controller Shelf	J69000C-1 L11
	Pre-Release 8.0 Miscellaneously Mounted OT Complementary Shelf 1	J69000C-1 L12
	Pre-Release 8.0 Miscellaneously Mounted OT Complementary Shelf 2	J69000C-1 L13
	Dispersion Compensation Module (DCM) Shelf	109196204

How to Order Circuit Packs

This section lists the comcodes and a brief description of the circuit packs used in Release 8.2 to equip the:

- Metropolis® EON shelf
- Metropolis® EON Optical Translator (OT) Complementary Shelves 1 and 2
- Metropolis® EON Optical Translator (OT) System Controller Shelf

For more information on circuit packs and units, refer to Chapter 4, “Product Description.”

(108309949) OA, LEA7B (ST connectors): (Optical Amplifier) a 16-channel Long-Reach OA which contains an optical monitor test port and filter that support either a 1532 nm or 1510 nm Optical Supervisory Channel (OSC).

(108904616) OA, LEA7B (SC connectors): (Optical Amplifier) a 16-channel Long-Reach OA which contains an optical monitor test port and filter that support either a 1532 nm or 1510 nm Optical Supervisory Channel (OSC).

(108680547) OA, LEA107B (ST connectors): (Optical Amplifier) a 16-channel Long-Span OA which contains an optical monitor test port and filters that support either a 1532 nm or 1510 nm Optical Supervisory Channel (OSC).

(109055582) OA2, LEA207 (SC connectors): (Optical Amplifier2) a 32-channel OA which contains an optical monitor test port and filter that support a 1510 nm Optical Supervisory Channel (OSC).

(109128520) OA3, LEA307 (SC connectors): (Optical Amplifier3) a 32-channel OA (with 33 dB gain and mid-stage access for DCM) which supports 10G architecture engineering rules. This amplifier contains an optical monitor test port and filter that support a 1510 nm Optical Supervisory Channel (OSC).

(109063099) LIRCV, LEA209 (SC connectors): (Line Interface Receive) circuit pack (with an optical monitoring port) installed instead of receive OA circuit pack to provide telemetry drop.

(109063107) LIHTR, LEA210 (SC connectors): (Line Interface Heater) circuit pack which controls the heaters for the OMU32 and ODU32.

(109063115) LITX, LEA211 (SC connectors): (Line Interface Transmit) circuit pack (with an optical monitoring port) installed instead of transmit OA to provide telemetry add.

(108364084) TLM, LDA4 (ST connectors): (Telemetry) provides a supervisory signal (Manchester-encoded E1 signal at 1510 nm, 2.048 Mb/s) that is used for fault location and maintenance functions. This circuit pack does not provide a customer maintenance signal.

(109182063) TLM, LDA4 (SC connectors): (Telemetry) provides a supervisory signal (Manchester-encoded E1 signal at 1510 nm, 2.048 Mb/s) that is used for fault location and maintenance functions. This circuit pack does not provide a customer maintenance signal.

(107822967) IAOLRP, LDA3: (Intra Office Line Relay Pack) provides connection to the IAOLAN interface. This circuit pack is inserted into the IAOLRP slot (labeled with L191) Metropolis® EON End Terminal shelves. Two IAOLRP circuit packs are required in dual end terminal shelf applications.

(107822819) TOHCTL, LEA102: (Tributary Overhead Controller) based on the configuration in which it is installed (repeater or end terminal), this circuit pack determines whether to process signals from slot TLM-1B or slot IAOLRP as SONET DCC or as IAOLAN-specific. The TOHCTL interfaces with the TLM circuit pack to exchange DCC data.

(107272510) SYSCTL, LEA1: (System Controller) provides system level user and operations system interfaces and performs system wide maintenance and performance monitoring operations. SYSCTL supports serial telemetry and X.25 interfaces.

(107786568) SYSMEM, LEA2: (System Memory) provides memory support for SYSCTL. User provisioned data and system software are stored in EPROMs on the SYSMEM circuit pack.

(109024430) OMU, 506A (LC connectors): (Optical Multiplexer Unit) combines sixteen drop side signals (16λ) into one optical signal called the optical line signal. The 506A has 14 dB through loss.

(109048140) OMU16, 507A (LC connectors): (Optical Multiplexer Unit 16) combines sixteen drop side signals (16λ) into one optical signal called the optical line signal.This OMU16 is also 32-channel ready and has 8 dB through loss.

(109077156) OMU16, 507B (LC connectors): (Optical Multiplexer Unit 16) combines sixteen drop side signals (16λ) into one optical signal called the optical line signal. This OMU16 is also 32-channel ready and has 5.5 dB through loss.

(109048157) OMU32, 508A (LC connectors): (Optical Multiplexer Unit 32 for channels 17 -32) combines 16 drop side signals (16λ) into one optical signal called the optical line signal. This OMU32 has 8 dB through loss.

(109077164) OMU32, 508B (LC connectors): (Optical Multiplexer Unit 32 for channels 17 -32) combines 16 drop side signals (16λ) into one optical signal called the optical line signal.This OMU32 has 5.5 dB through loss.

(109024448) ODU, 606A (LC connectors): (Optical Demultiplexer Unit) demultiplexes the optical line signal into sixteen drop side signals (16λ - no supervisory signal). The 606A has 14 dB through loss.

(109038679) ODU, 606B (LC connectors): Optical Demultiplexer Unit) demultiplexes the optical line signal into sixteen drop side signals (16λ) plus an additional supervisory line signal. The 606B has 14 dB through loss.

(109048165) ODU16, 607A (LC connectors): (Optical Demultiplexer Unit 16) demultiplexes the optical line signal into sixteen drop side signals (16λ - no supervisory signal). This ODU16 is also 32-channel ready and has 8 dB through loss.

(109077172) ODU16, 607B (LC connectors): (Optical Demultiplexer Unit 16) demultiplexes the optical line signal into sixteen drop side signals (16λ) plus an additional supervisory line signal.This ODU16 is also 32-channel ready and has 5.5 dB through loss.

(109048173) ODU32, 608A (LC connectors): (Optical Demultiplexer Unit 32 for channels 17 -32) demultiplexes the optical line signal into 16 drop side signals (16λ - no supervisory signal).This ODU32 has 8 dB through loss.

(109077180) ODU32, 608B (LC connectors): (Optical Demultiplexer Unit 32 for channels 17 -32) demultiplexes the optical line signal into 16 drop side signals (32λ) plus an additional supervisory line signal. This ODU32 has 5.5 dB through loss.

Growth Circuit Packs

See Table 7-23, “Circuit Pack Ordering Information” for individual OTU and OTPM comcodes.

(108022823) QOTU, 41S: (Quad Optical Translator Unit) mounts up to four Optical Translator Port Modules (LSBB and ELSBB OTPMs) - 100 Mb/s - 750 Mb/s, OC-3/STM-1, OC-12/STM-4, 16 Mb/s - 2.5 Gb/s.

(109051524) QOTU25, 41T: (Quad Optical Translator Unit 25) mounts up to four Optical Translator Port Modules (OTPM25s) OC-48/STM-16.

(109177311) QOTUUB, 41U: (Quad Optical Translator Unit) for the Universal Broadband (UBB) circuit pack mounts up to four Optical Translator Port Modules (OTPM UBBs and Drop UBB) 16 Mb/s - 2.5 Gb/s.

(108056284) OTCTL, LUD1: (OT Controller) integrates the OTUs into the Metropolis® EON control structure, combining Metropolis® EON and OT into a single network element.

OTPM, 42A(1-16)B (ST connectors): (Optical Translator Port Module) these modules electrically regenerate a single input OC-12/STM-4 optical signal and insert the tone required by Metropolis® EON onto that signal. The sixteen 42AxB OTPM codes support the sixteen 1.5µm wavelengths on Metropolis® EON systems with total dispersion not exceeding 10,900 ps/nm.

OTPM, 42A(1-16)B (SC connectors): (Optical Translator Port Module) these modules electrically regenerate a single input OC-12/STM-4 optical signal and insert the tone required by Metropolis® EON onto that signal. The sixteen 42AxB OTPM codes support the sixteen 1.5µm wavelengths on Metropolis® EON systems with total dispersion not exceeding 10,900 ps/nm.

(108023334) OTPM, 42B (ST connectors): (Optical Translator Port Module) electrically regenerates a single input OC-12/STM-4 optical signal and removes the tone required by Metropolis® EON from that signal. The 42B OTPM code supports 1.3µm wavelengths on Metropolis® EON systems with total dispersion not exceeding 1000 ps/nm. The 42B circuit packs are used on the receive end. Receive OTUs are not required for single-span systems.

(108904665) OTPM, 42B (SC connectors): (Optical Translator Port Module) electrically regenerates a single input OC-12/STM-4 optical signal and removes the tone required by Metropolis® EON from that signal. The 42B OTPM code supports 1.3µm wavelengths on Metropolis® EON systems with total dispersion not exceeding 1000 ps/nm. The 42B circuit packs are used on the receive end. Receive OTUs are not required for single-span systems.

OTPM, 43A(1-16)B (ST connectors): (Optical Translator Port Module) these modules electrically regenerate a single input OC-3/STM-1 optical signal and insert the tone required by Metropolis® EON onto that signal. The sixteen 43AxB OTPM code supports 1.5µm wavelengths on Metropolis® EON systems with total dispersion not exceeding 10,900 ps/nm.

(108023359) OTPM, 43B (ST connectors): (Optical Translator Port Module) electrically regenerates a single input OC-3/STM-1 optical signal and removes the tone required by Metropolis® EON from that signal. The 43B OTPM code supports 1.3µm wavelengths on Metropolis® EON systems with total dispersion not exceeding 1000 ps/nm. The 43B circuit packs are used on the receive end. Receive OTUs are not required for single-span systems.

OTPM, 44A(1-16)B (ST connectors): (Optical Translator Port Module) these modules electrically regenerate a single input low speed broadband 100 Mb/s - 750 Mb/s optical signal and insert the tone required by Metropolis® EON onto that signal. The sixteen 44AxB OTPM codes support 1.5µm wavelengths on Metropolis® EON systems with total dispersion not exceeding 10,900 ps/nm on the line side and multi-mode 1310 nm on the client side. OFC is not supported.

OTPM, 44A(1-16)B (SC connectors): (Optical Translator Port Module) these modules electrically regenerate a single input low speed broadband 100 Mb/s - 750 Mb/s optical signal and insert the tone required by Metropolis® EON onto that signal. The sixteen 44AxB OTPM codes support 1.5µm wavelengths on Metropolis® EON systems with total dispersion not exceeding 10,900 ps/nm on the line side and multi-mode 1310 nm on the client side. OFC is not supported.

(108089467) OTPM, 44B (ST connectors): (Optical Translator Port Module) electrically regenerates a single input low speed broadband 100 Mb/s - 750 Mb/s optical signal and removes the tone required by Metropolis® EON from that signal. The 44B OTPM code supports 1.3 µm wavelengths on Metropolis® EON systems with total dispersion not exceeding 1000 ps/nm. The 44B circuit packs are used on the receive end.

(108904715) OTPM, 44B (SC connectors): (Optical Translator Port Module) electrically regenerates a single input low speed broadband 100 Mb/s - 750 Mb/s optical signal and removes the tone required by Metropolis® EON from that signal. The 44B OTPM code supports 1.3µm wavelengths on Metropolis® EON systems with total dispersion not exceeding 1000 ps/nm. The 44B circuit packs are used on the receive end.

OTPM, 44C(1-16) (SC connectors): (Optical Translator Port Module) these modules electrically regenerate a single input, enhanced low speed broadband 16 Mb/s - 1.062 Gb/s optical signal and insert the tone required by Metropolis® EON onto that signal. The sixteen 44Cx OTPM codes support 1.5µm wavelengths on Metropolis® EON systems with total dispersion not exceeding 10,900 ps/nm on the line side and multi-mode 1310 nm on the client side. These modules support Open Fiber Control (OFC).

(109209171) OTPM, 44BC (SC connectors): (Optical Translator Port Module) electrically regenerates a single input, enhanced low speed broadband 16 Mb/s - 1.062 Gb/s optical signal and removes the tone required by Metropolis® EON from that signal. The 44BC OTPM code supports 1.3µm wavelengths on Metropolis® EON systems with total dispersion not exceeding 1000 ps/nm. The 44BC circuit packs are used on the receive end. These modules support Open Fiber Control (OFC).

OTPM25, 46A(1-32) (SC connectors): (Optical Translator Port Module 25) these modules electrically regenerate a single input OC-48/STM-16 optical signal and insert the tone required by Metropolis® EON onto that signal. The thirty-two 46Ax OTPM25 codes supports 1.5µm wavelengths on Metropolis® EON systems with total dispersion not exceeding 6200 ps/nm.

(109092015) OTPM25, 46B (SC connectors): (Optical Translator Port Module 25) electrically regenerates a single input OC-48/STM-16 optical signal and removes the tone required by Metropolis® EON from that signal. The 46B OTPM25 code supports 1.3µm wavelengths on Metropolis® EON systems with total dispersion not exceeding 1000 ps/nm. The 46B circuit packs are used on the receive end.

OTPM UBB, 47A(1-32) (SC connectors): (Optical Translator Port Module Universal Broadband) these (add) modules electrically regenerate a single input in the 16 Mb/s - 2.5 Gb/s optical signal range and insert the tone required by Metropolis® EON onto that signal. The thirty-two 47Ax OTPM UBB (add) codes support 1.5µm wavelengths on Metropolis® EON systems with total dispersion not exceeding 6200 ps/nm on the line side. Accepts multi-mode and single-mode 1310 nm on the client side. OFC is not supported.

(109153841) OTPM DUBB, 47B (SC connectors): (Optical Translator Port Module Drop Universal Broadband) electrically regenerates a single input in the 16 Mb/s - 2.5 Gb/s optical signal range and removes the tone required by Metropolis® EON from that signal. The 47B OTPM DUBB code supports 1.3µm wavelengths on Metropolis® EON systems with total dispersion not exceeding 1000 ps/nm. The 47B circuit packs are used on the receive end.

(108128737) OTU, 41BB (ST connectors): (Optical Translator Unit) electrically regenerates a single input OC-48/STM-16 optical signal and removes the tone required by Metropolis® EON from that signal. The 41BB OTU code regenerates OC-48/STM-16 signals in the 1.3µm range for other SONET OC-48/SDH STM-16 receivers with total dispersion not exceeding 1000 ps/nm. The 41BB circuit packs are used on the receive end. Receive OTUs are not required for single-span systems.

(108905134) OTU, 41BB (SC connectors): (Optical Translator Unit) electrically regenerates a single input OC-48/STM-16 optical signal and removes the tone required by Metropolis® EON from that signal. The 41BB OTU code regenerates OC-48/STM-16 signals in the 1.3µm range for other SONET OC-48/SDH STM-16 receivers with total dispersion not exceeding 1000 ps/nm. The 41BB circuit packs are used on the receive end. Receive OTUs are not required for single-span systems.

OTU, 41A(1-16)C (ST connectors): (Optical Translator Unit) these circuit packs electrically regenerate a single input OC-48/STM-16 optical signal and insert the tone required by Metropolis® EON onto that signal. These sixteen codes support sixteen wavelengths on Metropolis® EON systems with total dispersion not exceeding 6800 ps/nm.

OTU, 41A(1-16)C (SC connectors): (Optical Translator Unit) these circuit packs electrically regenerate a single input OC-48/STM-16 optical signal and insert the tone required by Metropolis® EON onto that signal. These sixteen codes support sixteen wavelengths on Metropolis® EON systems with total dispersion not exceeding 6800 ps/nm.

OTU, 41F(1-16) (ST connectors): (Optical Translator Unit) electrically regenerates a single input GbE optical signal and inserts the tone required by Metropolis® EON onto that signal. The sixteen codes support sixteen wavelengths on Metropolis® EON systems with total dispersion not exceeding 6,800 ps/nm.

OTU, 41F(1-16) (SC connectors): (Optical Translator Unit) electrically regenerates a single input GbE optical signal and inserts the tone required by Metropolis® EON onto that signal. The sixteen codes support sixteen wavelengths on Metropolis® EON systems with total dispersion not exceeding 6,800 ps/nm.

(108585928) OTU, 41G (ST connectors): (Optical Translator Unit) electrically regenerates a single input Ethernet 1.25 Gb/s optical signal and removes the tone required by Metropolis® EON from that signal. The 41G OTU code regenerates Ethernet signals in the 1.3µm range for other Ethernet 1.25 Gb/s receivers with total dispersion not exceeding 1000 ps/nm.

(108905316) OTU, 41G (SC connectors): (Optical Translator Unit) electrically regenerates a single input Ethernet 1.25 Gb/s optical signal and removes the tone required by Metropolis® EON from that signal. The 41G OTU code regenerates Ethernet signals in the 1.3µm range for other Ethernet 1.25 Gb/s receivers.with total dispersion not exceeding 1000 ps/nm.

10G OTU, 41H(1-32)A (SC connectors): (Optical Translator Unit) these modules electrically regenerate a single input in the OC-192/ STM-64 optical signal range and insert the tone required by Metropolis® EON onto that signal. The thirty-two 41H1-32A OTU codes support 1.5µm wavelengths on Metropolis® EON systems with total dispersion not exceeding 850 ps/nm. Receiver optimized for receiver sensitivity and recommended for use as add OTUs.

(109178202) 10G OTU, 41HB (SC connectors): (Optical Translator Module Unit) electrically regenerates a single input in the OC-192/STM-64 optical signal range and removes the tone required by Metropolis® EON from that signal. The 41HB OTU code supports 1.3µm wavelengths on Metropolis® EON systems with total dispersion not exceeding 800 ps/nm. The 41HB circuit packs are used on the receive end.

10G OTU, 41H(1-32)C (SC connectors): (Optical Translator Unit) these modules electrically regenerate a single input in the OC-192/ STM-64 optical signal range and insert the tone required by Metropolis® EON onto that signal. The thirty-two 41H1-32C OTU codes support 1.5mm wavelengths on Metropolis® EON systems with total dispersion not exceeding 850 ps/nm. Receiver optimized for signal-to-noise ratio (SNR) and recommended for use as through OTUs.

(109077198) OUPSR, LEP2 (SC connectors): (Optical Unidirectional Path Switched Ring) provides optical protection switching for one channel using single-mode input. Both transmit and receive functionality are supported in this circuit pack.

(109198101) OUPSR, LEP3 (SC connectors): (Optical Unidirectional Path Switched Ring) provides optical protection switching for one channel (using multi-mode 1310 input). Both transmit and receive functionality are supported in this circuit pack.

2DM25 Muxing OTU, 41M(1-32) (SC connectors): (Electrically regenerates input FICON (1.06G), ISC-2 (1.06G), ESCON (200 Mb/s), Fiber Channel (1.06G), or GbE (1.25G), and inserts the tone required by Metropolis® EON onto the signal and transports as OC-48/STM-16 with total dispersion not to exceed 6200 ps/nm. The bit-rate and client interface is determined by a small form-factor pluggable (SFP) module that must be ordered separately. In addition, the muxing OTU supports the drop function by demultiplexing the OC-48/STM-16 into the two data signals. If required, the OTPM25 may be used to regenerate the signal.

How to Order Pluggable Modules for Muxing OTU

The muxing OTU requires a small form factor plug-in (SFP) module (see the following figure) which is to be plugged in to receive the client input signal. SFPs are new in Release 8.2.

Figure 7-1 Small Form Factor Plug-in (SFP) Module

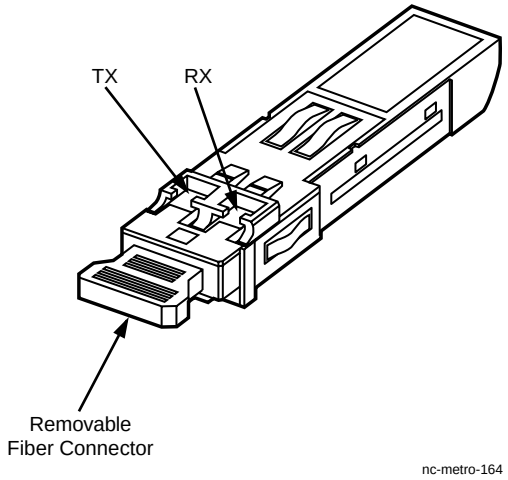

The following table provides a list of the comcodes and CLEI codes for the small form factor plug-in (SFP) modules that can be plugged into the muxing OTU. For each of the FICON-Fiber Channel/ESCON/GbE/ ISC-2 bit-rates, there will be a choice of fiber type (multi-mode vs. single-mode) and channel width (850 nm vs 1310 nm).

Table 7-6 SFP Pluggable Modules for the Muxing OTU

Bit-rate	Wavelength	Fiber Type	Module Name	Connector Type	Comcode	CLEI Code
Gigabit Ethernet	1310 nm	Single Mode	1310SMGIG	LC	109189340	WMTTDU0BAA
Gigabit Ethernet	1310 nm	Multi-Mode	1310MMGIG	LC	109189357	WMTTEU0BAA
FICON, Fiber Channel, ISC-2	1310 nm	Single Mode	1310SMFC	LC	109189365	WMTTFU0BAA
FICON, Fiber Channel, ISC-2	1310 nm	Multi-Mode	1310MMFC	LC	109189373	WMTTGU0BAA
ESCON	1310 nm	Single Mode	1310SMES	MT-RJ	109205617	WMTTJU0BAA
ESCON	1310 nm	Multi-Mode	1310MMES	MT-RJ	109205609	WMTTHU0BAA
Gigabit Ethernet	850 nm	Multi-Mode	850MMGIG	LC	109189399	WMTTEV0BAA
FICON, Fiber Channel, ISC-2	850 nm	Multi-Mode	850MMFC	LC	109189415	WMTTGV0BAA

How to Order Copper Cables

This section contains information on copper cables, including LAN, integration and other cables connecting Metropolis® EON to the external environment.See Chapter 4, “Product Description,” for a depiction of backplane cable connections (see Figure 4-55, “OT System Controller Shelf Interconnection Panel and Cabling”, and Figure 4-56, “OT Complementary Shelf Interconnection Panel and Cabling”).

Some cables are provided with bays and shelves; others are not. The following table identifies whether or not the cable in the list must be ordered separately.

Table 7-7 Cable Ordering Information

Equipment	Integrated Bay (Single)	Misc Mount Shelf Kit (Single)	Integrated Bay (Double)	Misc Mounted Shelf Kit (Double)	Metropolis® EON Shelf	OT Shelves
Power cable	No	No	No	No	No	No
LAN cables	Yes	Yes	Yes	Yes	Yes	N/A
Fan power cables	No	No	No	No	No	No
Fan alarm cables	No	No	No	No	No	No
Integration cables	No	No	No	No	N/A	Yes
Heat baffles	2	2	4	4	1	1
Fan units	3	3	6	6	1	1

Notes:

1. No=Shipped with equipment. Do not order separately.
2. Yes=Order separately.
3. Misc=Miscellaneous

LAN Cables for OS:

LAN copper cables are used for the LAN connections which are required to connect Metropolis® EON to the operating system (OS). A LAN cable connects the DB-15 connector on the Metropolis® EON interconnection panel to standard RJ-45 office hub equipment for 10 Base-T access at the 10 Mb/s rate.

The following table lists the LAN cables which are orderable for connection to the OS.

Table 7-8 LAN Cable Ordering Information

Cable Type DB-15 to RJ-45	T-5G276-33 Figure[1]	ED-7G028-22 Cable Drawing	
		Group	Length
LAN cable	13	G817	25 ft.
		G818	75 ft.
		G815	150 ft.
		G816	300 ft.

Notes:

1. The T-5G276-33 figure is needed for the installation process.

In addition to the LAN cables, an Ethernet Crossover Adapter is used to support termination on Ethernet hub equipment. In this way, the LAN cables will support both OS and DCC connectivity. The crossover adaptor is available from a number of sources. One such source is:

Tech World
POB 367
Arlington Heights, IL 60006-0367

Sales: (847)398-8836
Email address: sales@twstore.com
URL address: http://www/twstore.com/twstore (See item C5XOVER)

LAN Cables for DCC Connectivity:

LAN cables are also available to connect the two sides of a ring node when using IAOLRP circuit packs for DCC connectivity, in situations where OS connectivity is not required.

Here are the comcodes for ordering LAN cross-over cables for DCC connectivity between the two bays of a dual-bay ring node:

- 848845376 10 ft.
- 848845350 20 ft.
- 848845343 50 ft.
- 848845384 100 ft.
- 848845368 150 ft.

- 848845335 300 ft.

These LAN cross-over cables have DB-15 connections at both ends. They may be used to connect the east- and west-facing bays in a dual-bay ring node without connecting to office hub equipment.

Integration Cables:

A second set of cables, integration cables (ED7G028-22), connect the Metropolis® EON and OT system controller shelves. The following two figures illustrate integration cabling functions between a Metropolis® EON shelf and OT System Controller Shelves.

Figure 7-2 Integration Cabling - Metropolis® EON Shelf/One OT System Controller Shelf

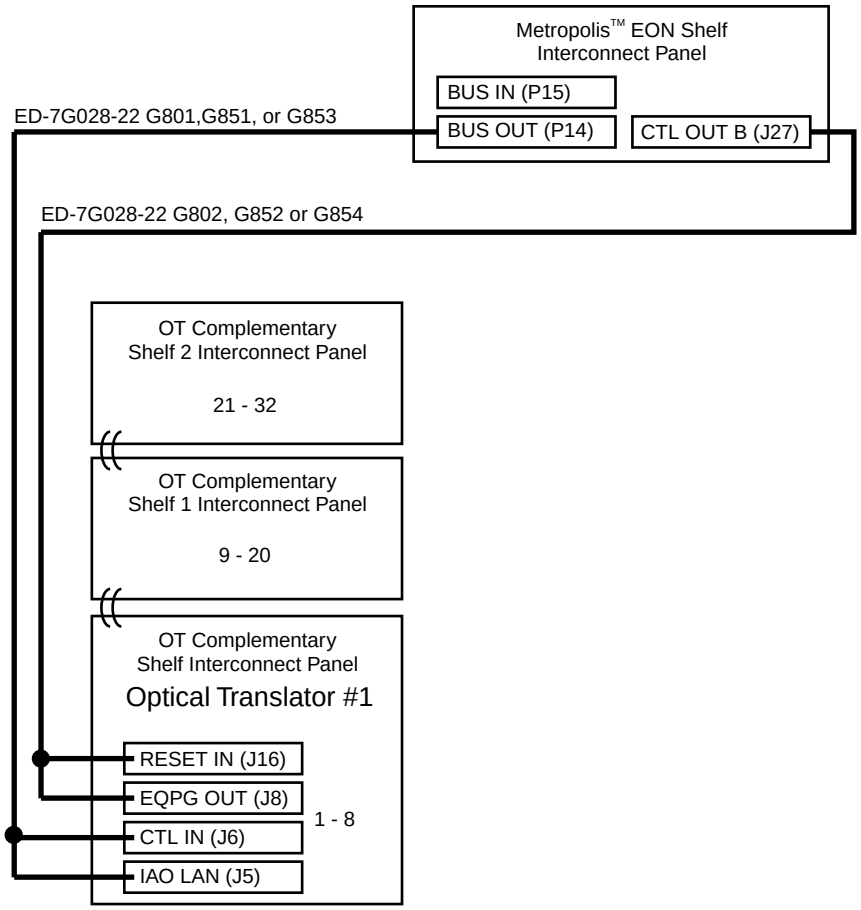

Figure 7-3 Integration Cabling - Metropolis® EON Shelf/Two OT System Controller Shelves

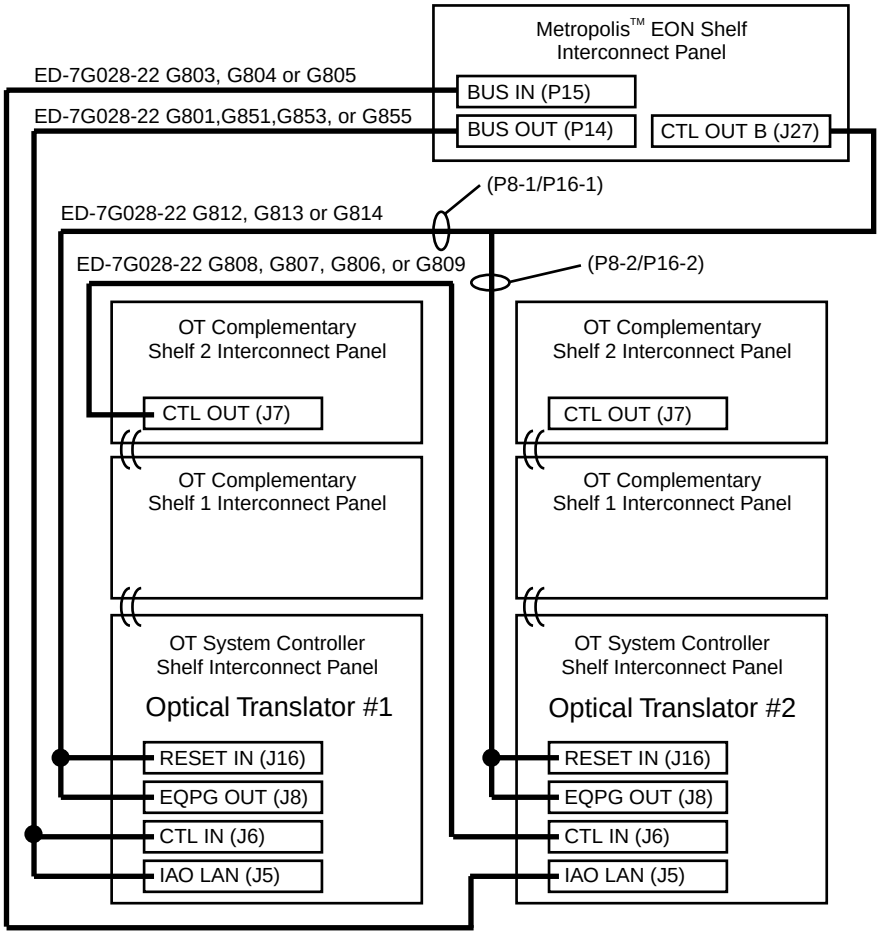

EON = Metropolis™ Enhanced Optical Networking (EON)

The integration cables (with a 20-foot length) are not provided with the OT shelves and must be ordered separately.

Power Cables:

Power cables are provided with the Metropolis® EON shelf and OT shelves and do not need to be ordered separately. If longer lengths are required for the power cables or the integration cables than those provided with the shelves, refer to the drawing T-5G156-33.

The following additional copper cables are used in Metropolis® EON. See Table 7-8 for ordering information.

Line orderwire cable– supports voice communication (E2 byte) between adjacent Metropolis® EON network elements.

Section orderwire cable– supports voice communication (E1 byte) between adjacent Metropolis® EON network elements.

Section user channel cable– supports access to overhead section user channel bits.

X.25 cable– provides access to an OS interface.

Serial telemetry cable– connects Metropolis® EON to an external miscellaneous discrete unit.

Miscellaneous discrete cable– connects Metropolis® EON to a user definable set of monitor points.

Office alarm cable– connects Metropolis® EON to the office alarms.

Parallel telemetry cable– connects Metropolis® EON to a parallel telemetry interface.

CIT DTE Interface cable– provides a remote interface to Metropolis® EON that is functionally similar to the CIT Data Communications Equipment (DCE) port. The port can be used to load software and perform system diagnostics.

Table 7-9 Metropolis® EON Intraoffice Electrical Non-transmission Cables

Cable	T-5G276-33 Figure[1]	ED-7G028-22 Cable Drawing	
		Group	Length
Line orderwire	8, 10, 11	G471	25 ft.
		G481	100 ft.
Section orderwire		G451	150 ft.
Section user channel cable		G461	250 ft.
X.25 cable	13	G625	20 ft.
		G652	150 ft.
		G662	250 ft.
Serial telemetry cable[2]	14	G271	25 ft.
		G281	100 ft.
		G251	150 ft.
		G261	250 ft.
Miscellaneous discrete 1 and 2	15, 16, 17, 18	G371	50 ft.
Office alarm parallel telemetry cable		G381	100 ft.
		G351	150 ft.
		G361	250 ft.
CIT interface DTE cable	20	G725	20 ft.
		G753	50 ft.
		G754	100 ft.
		G752	150 ft.
		G755	250 ft.

Notes:

1. The T-5G276-33 figure is needed for the installation process.
2. Use to connect from serial TLM 1 to the External Miscellaneous Discrete Unit.

How to Order DCMs

This section contains information on Dispersion Compensation Modules (DCMs) and its carrier which houses up to four DCMs.

If dispersion compensation is required, a DCM carrier shelf must be ordered together with the DCM modules. The following is a list of DCMs available for ordering. (Refer to Table 7-25, “Circuit Pack Ordering Information” for the comcodes and CLEI codes.)

- DCM - 2.5 km
- DCM - 5.0 km
- DCM - 7.5 km
- DCM - 10 km
- DCM - 20 km
- DCM - 30 km
- DCM - 40 km
- DCM - 50 km
- DCM - 60 km
- DCM - 70 km
- DCM - 80 km
- DCM - 90 km
- DCM - 100 km

The DCM carrier shelf comcode is 109196204.

How to Order Fibers

This section identifies the fiber connections and intra-shelf fibers for a Metropolis® EON shelf. These fibers are available from fiber vendors. Some fiber kits have been created and are identified below.

The following figure and table define the fiber connections and intra-shelf fibers for a 1A-TX-32 end terminal equipped with OMU16/ ODU16 and OMU32/ODU32.

Figure 7-4 1A-TX-32 End Terminal (2-OA)

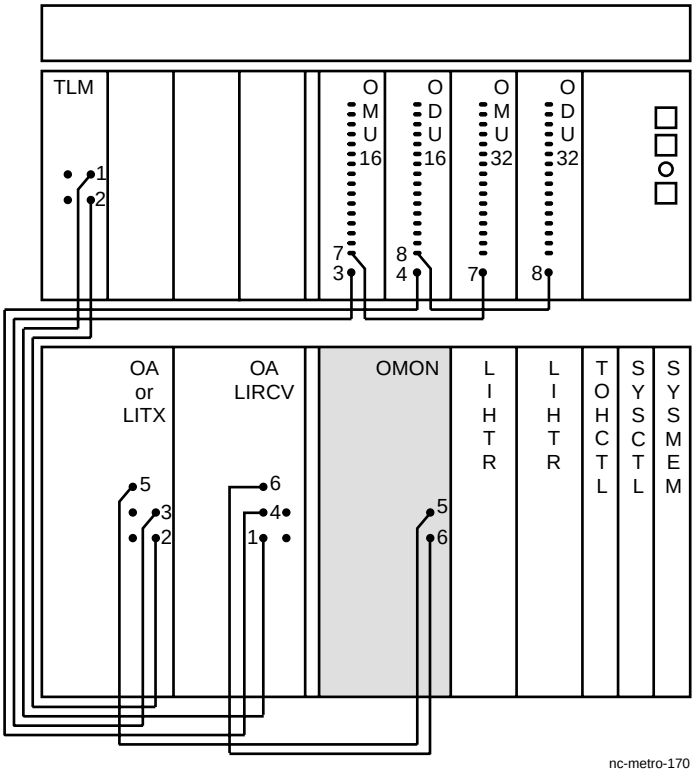

The OMU32 to OMU16 and ODU16 to ODU32 fiber labels shown in italics in the following table, and the fibers they attach to, are new for Release 8.2.

Table 7-10 Intra-Shelf Fiber Jumpers for 1A-TX-32 End Terminal

Fiber ID	From				To				Length
	Circuit Pack	Conn[1]	Conn Type	Label to Install	Circuit Pack	Conn	Conn Type	Label to Install	
1	OA 1B or LIRCV	TLM OUT	UBO	1B-OA-TLMOUT	TLM 1A	IN	UBO	1A-TLM-IN	50"
2	TLM 1A	OUT	UBO	1A-TLM-OUT	OA 1A or LITX	TLM IN	UBO	1A-OA-TLMIN	50"
3	OMU 1A	OMU OUT	LC	1-OMU-OUT	OA 1A	IN	UBO	1A-OA-IN	50"
4	ODU 1B	ODU IN	LC	1-ODU-IN	OA 1B	OUT	UBO	1B-OA-OUT	50"
7	OMU 2A	17-32 OUT	LC	*2-OMU-32-OUT*	OMU 1A	17-32 IN	LC	*1-OMU-32-IN*	10"
8	ODU 1B	17-32 OUT	LC	*1-ODU-32-OUT*	ODU 1B	17-32 IN	LC	*2-ODU-32-IN*	10"

Notes:

1. Conn = Connector

The following table lists the fibers within the Metropolis® EON shelf that can be ordered for end terminal configurations.

Table 7-11 Metropolis® EON Shelf Intra-shelf Fibers

Network Element Type		Fibers Needed	Fibers with ST Connectors[2]	Fibers with SC Connectors
Repeater		(4)-50" UBO[1]-UBO	L161	108845801
16-channel	1-OA End Terminal	(1)-20" LC-UBO (1)-50" UBO-UBO (1)-50" LC-UBO	L163	(1) 108845801 (1) 108845793 (1) 108845819
	2-OA End Terminal	(2)-50" UBO-UBO (2)-50" LC-UBO	L162	(2) 108845801 (2) 108845793

Notes:

1. UBO=Universal Build Out which can be equipped for ST, SC, or FC Connectors
2. J68982C1 and J68982D1

For a dual facing shelf, order 2 sets of fibers listed in the previous table, either 2 one-OA or 2 two-OA, or 1 one-OA and 1 two-OA set of fibers. For a 32-channel end terminal order the one-OA or two-OA set of fibers as well as two fibers which are 10 inches long with LC connectors at both ends. These two fibers will connect OMU16 to OMU32 and ODU16 to ODU32.

For a ring terminal with through traffic, 10-inch LC-LC fibers should be ordered to connect OMU and ODU ports for through channels.

Finally, additional fibers will be required to connect OMU/ODU with OTUs. These may be ordered from fiber vendor catalogs.

How to Order LBOs

The following table identifies the LBO kits available for ordering.

Table 7-12 LBO Kits

Ports	Connector	Comcode	Quantity
OA/TLM	ST	108138470	
	FC	108138504	1
	SC	108436254	
OA/LIRCV/LITX in and out	ST	107515561	
	SC	108435918	1
	FC	108371717	
OT-ODU	ST	108371741	
	SC	108435918	1 per every 4 optical channels required
	FC	108371717	
OTPM-ODU	ST	108371766	
	SC	108435926	1 per OTPM
	FC	108371725	
OMU in and ODU out	LC	108359407	1 per every 4 optical channels required

Additional LBOs may be required and can be ordered from a variety of vendors.

For the 32-channel system, LBOs will not have to be ordered for OTUs/OTPMs or for OMU/ODU add/drop functions, but will have to be ordered for OMU/ODU through function.

How to Order Apparatus Blanks

Apparatus blanks are required in unused OA slots as well as unused OTU slots for air flow containment.

Full-size blank fillers for OTU circuit packs can be ordered by using the following comcode: 848825287. For unused OA slots order (2) full-size OTU apparatus blanks.

The half-size blank fillers for OTU circuit packs can be ordered with the following comcode: 848832192

How to Order Labels

The labels shown in the following table are used in Metropolis® EON, in both Release 8.2 and pre-release 8.0.

Table 7-13 Labels for Release 8.2 and Pre-Release 8.0 Equipment

Drawing	List	Description
J68982C-1	106	Miscellaneously-mounted End Terminal Label Kit
	107	Miscellaneously-mounted Repeater Label Kit
	108	User panel label for SDH alarms and severities
	191	Label for IAOLRP Circuit Pack Slot

How to Order Miscellaneous Products

This section describes and lists the ordering information for miscellaneous products used with Metropolis® EON.

Replacement Power Fuses

The following replacement power fuses can be ordered:

- System Power Fuse - 16-channel, 10 amperes - pre-release 8.0 for all shelves
  Comcode: 405749920
- System Power Fuse - 32-channel, 12 amperes - Release 8.0 for Metropolis® EON shelf
  Comcode: 405749938
- System Power Fuse - 32-channel, 20 amperes - Release 8.0 for OT shelves
  Comcode: 405749961

Replacement Power Filters

The following replacement power filters can be ordered:

- Power Filter (pre-release 8.0 for all shelves)
  Comcode: 408003432
- Power Filter (Release 8.0 for all shelves)
  Comcode: 108515776

Replacement Fans and Fan Filters

The following replacement fan and fan filter equipment can be ordered:

- Replacement Fan Filter kit (Release 8.0) consists of 5 fan filters
  Comcode: 848857058
- Fan Assembly (Release 8.0)
  Comcode: 848766994

Replacement Fan Alarm Cables

Fan alarm cables are provided with R8.0 Miscellaneously Mounted shelf kits and Integrated Bay (single) and (double). Replacement fan alarm cables may be ordered. There are two types:

- Type 1 fan alarm cables connect the Metropolis® EON shelf fan to the Metropolis® EON backplane miscellaneous discrete connector on the Metropolis® EON interconnection panel.
- Type 2 fan alarm cables are available to daisy-chain fans together for a common alarm point.

Release 8.0 shelf kits and bays automatically ship with 5 ft. 7in. fan alarm cables. If other cable lengths are required, they may be ordered. The following table lists the ordering information for replacement fan alarm cables as well as their cable lengths.

Table 7-14 Replacement Fan Alarm Cables

Replacement Fan Alarm Cable	Comcode	Length
Type 1	848819363	5 ft. 7 in.
	848822508	20 in.
	848822482	100 in.
	848822490	180 in.
Type 2	848825097	5 ft. 7 in.
	848836748	10 ft.
	848836730	20 ft.
	848836722	100 ft.
	848836714	180 ft.

Power Meter Adapters

For testing purposes, an adapter needs to be attached to optical power meter equipment (EXfo) in order to measure the intensity of OA pump lasers. This adapter consists of a fiber jumper with an LC connector block (comprised of two LC connectors) on one end and an ST connector on the other end. The LC connector block attaches to the Metropolis® EON and the ST connector attaches to the power meter.

The LC connector block can be ordered by using the following comcode: 108072489

Cleaning Materials

All optical fiber connectors (ST, FT, LC, and SC), lightguide buildouts, and buildout blocks or equivalents should be cleaned before initial connections or re-connections are made (see the Release 8.2 *Metropolis*® Enhanced Optical Networking (EON), *User Operations Guide (UOG)* for complete cleaning information).

The following table lists cleaning materials recommended for all optical fiber connectors. Order these materials directly from: Speer Fiber Optics at 1-908-359-1173. The company address is: 18 Pierson Drive, Belle Mead, NJ 08502.

Table 7-15 Cleaning Materials for Optical Fiber Connectors

Vendor	Product Description	Supplier Order #
Speer Fiber Optics	CLETOP Cleaning Cassette	14100500
	CLETOP Replacement Reel	14100700
	CLETOP Sticks (200 sticks/box)	14100400

METRAL Backplane Replacement Pins

Backplane pins sometimes bend or break from incorrect circuit pack insertion and removal. Table 7-16, “METRAL Pin Ordering Information” (7-37), Table 7-17, “METRAL Pin Kit/Pin Tool Kit Ordering Information” (7-37), and Table 7-18 Metropolis® EON/OT Equipment Locations and Pin Types (7-38) provide information on pin ordering, pin replacement kits, and pin types for Metropolis® EON. You can order these materials directly from: Berg Electronics at 1-717-938-6711. The company address is: 825 Old Trail Road, Etters, PA 17319.

Table 7-16 METRAL Pin Ordering Information

Pin Type (Kit Device Code)	Quantity per kit	Pin Length (mm)
88929-102	25	5.75/4.3
88929-106	25	5.75/13.6
88929-119	25	8.00/4.3
88930-101	25	Blade

Table 7-17 METRAL Pin Kit/Pin Tool Kit Ordering Information

Product Name	Supplier Order #
METRAL pin replacement tool kit	MT-370-01

Table 7-18 Metropolis® EON/OT Equipment Locations and Pin Types

Circuit Pack Slot	Backplane Location	Rows Using Pin Type: 88929-102	Rows Using Pin Type: 88929-106	Rows Using Pin Type: 88929-119	Rows Using Pin Type: 88930-101
Metropolis® EON Equipment					
SYSMEM (LEA2)	20-604	1-18, 25-72, 97-156	19-24, 85-96	157-162	
SYSCTL (LEA1)	20-584	1-12, 49-72, 85-114, 127-150	151-156	157-162	
TOHCTL (LEA102)	20-554	19-66, 85-90, 97-102, 115-138	151-156	157-162	
OA - LEA7B and LEA107B OA2 - LEA207 OA3 - LEA307	20-534, 20-434, 20-330, 20-230	1-12, 109-114, 121-150	151-156	157-162	
LIRCV (LEA209) LIHTR (LEA210) LITX (LEA211)	20-534, 20-434, 20-330, 20-230	1-12, 109-114, 121-150	151-156	157-162	
TLM (LDA4)	52-180, 52-230, 52-280, 52-330	19-42, 55-90	91-96	97-102	
IAOLRP (LDA3)	52-230	19-42, 55-90	91-96	97-102	
USER PNL	45-557	1-12			
PWR A	50-597				1-12
PWR B	44-597				1-12
OT Equipment					
OTCTL (SYSMEM)[1]	20 - 605	1 - 72 85 - 156		157 - 162	

Circuit Pack Slot	Backplane Location	Rows Using Pin Type: 88929-102	Rows Using Pin Type: 88929-106	Rows Using Pin Type: 88929-119	Rows Using Pin Type: 88930-101
OTCTL (SYSCTL)[1]	20 - 565	1 - 72 85 - 156		157 - 162	
OTCTL (TOHCTL)[1]	20 - 525	1 - 12 19 - 66 85 - 156		157 - 162	
OT (System Controller Shelf)	20 - 163 20 - 203 20 - 243 20 - 283 20 - 323 20 - 363 20 - 405 20 - 445 20 - 485[2]	1 - 12 85 - 156		157 - 162	
OT (Complementary Shelf 1 and 2)	20 - 163 20 - 203 20 - 243 20 - 283 20 - 323 20 - 363 20 - 405 20 - 445 20 - 485 20 - 525 20 - 565 20 - 605	1 - 12 85 - 156		157 - 162	
PWR A	39 - 184				1 - 12
PWR B	39 - 570				1 - 12

Notes:

1. The OTCTL circuit pack occupies the SYSCTL, SYSMEM, and TOHCTL slots in the backplane.
2. This slot is intentionally left blank.

External Miscellaneous Discrete Unit (EMDU)

EMDUs provide user-settable functions for the control and monitoring of equipment collocated with Metropolis® EON. Refer to Chapter 6, “Operations, Administration, Maintenance, and Provisioning” for more information.

> **Important!** You must use 1st or 2nd serial telemetry cable to connect an EMDU to the first serial telemetry port, SER TLM1 (P19). See Table 7-8 for group ordering information.

These units are optional. You may order the units either directly from the manufacturer using the order numbers listed in the table, or from Lucent Technologies using the comcode numbers that are also listed.

Contact Harris, Inc., Network Support Products at 972-235-5292. The company address is:

1850 No. Greenview Ave.
M/S 184
Richardson, TX 75081

Contact Dantel, Inc. at 1-209-292-1111. The company address is:

2991 No. Argyle Ave.
Fresno, CA
93727-1321

The following table lists the available types of EMDUs. Note that these do not include mounting materials.

Table 7-19 Ordering Information for External Miscellaneous Discrete Unit (EMDU)

Supplier Name	Supplier Model Name	Supplier Order #	Lucent Comcode[1]
DANTEL	Alarm Control Block	Model No. 46220-00	407567924
	Mounting Bar	A25-00508-01	406863621
HARRIS	C-1000 Centurion	594 - T099 (Integrated Bay)	407845049
		594 - T043	407567932
	Strip Terminal		407809003

Notes:

1. It is recommended that you use the Lucent Technologies comcode number when ordering.

DANTEL Orderwire Shelf

The DANTEL orderwire shelf provides a 64 kb/s interface to Metropolis® EON. It is shipped separately and does not mount in a Metropolis® EON cabinet.

The orderwire shelf is optional and is available from either Lucent Technologies or DANTEL, Inc. To order the shelf from Lucent Technologies, use the following information:

Lucent comcode: 407790286 Kit, DANTEL interface voice-data orderwire

To order the shelf from Dantel, use the following information:

DANTEL Part #: D18-05547-04

How to Order Software and Documentation

The following table provides comcodes for new system/upgrade orders of Metropolis® EON Release 8.2 software and documentation. The software and documentation is shipped either with the equipment or separately. The media (CD-ROM) contains the software, electronic documentation, and peripheral software tools. Every CD-ROM is shipped with a hardcopy of the Software Release Description (SRD).

Table 7-20 New System/Upgrade Software and Documentation Ordering

Description	Comcode
Release 8.2.0-Metropolis® EON Software Release Description (SRD)	109184713
Release 8.2-Metropolis® EON Installation Guide	109184747
Release 8.2-Metropolis® EON User Operations Guide (UOG)	109184721
Release 8.2-Metropolis® EON Alarm Messages and Trouble Clearing Guide (AMTCG)	109184739
Release 8.2-Metropolis® EON software CD-ROM for Initial Installation	109184689
Release 8.2-Metropolis® EON software CD-ROM for Upgrade from Release 8.0	109184697

The information in the following table is used when ordering additional copies of Release 8.2 software.

Table 7-21 Additional Software and Documentation Ordering

Release 8.2-Metropolis® EON Spare Software CD-ROM Comcode
109184705

The Metropolis® EON Release 8.2 CD-ROM contains the following:

- CD-ROM Browser
- CenterLink Online Tour
- CenterLink-CIT software
- Release 8.2-Metropolis® EON CmdSet/NE software
- Release 8.2-Metropolis® EON SmartManual
- User documentation
- Adobe Acrobat Reader 4.0

□

Spares Guidelines and Ordering

Introduction

This section provides information on circuit pack sparing for Metropolis® EON. Circuit pack comcodes and CLEI codes are also provided. Note that these numbers are subject to change.

Circuit Pack Sparing Lead Time

Lead time, also called turnaround time, is the elapsed time from the point a circuit pack is known to fail at a given service location to the point when a repaired or new one arrives at the location where spare circuit packs are stocked (centralized or local). This replenishment facilitates a spare circuit pack level consistent with the circuit pack population that is in-service. You can use sparing information for 10-day and 64-day lead times for up to 20,000 circuit packs in-service.

Lead time should not be confused with Mean Time to Repair (typically, two to four hours), which is the time elapsed from when a circuit pack is known to fail in service to when a spare circuit pack is placed in service to replace the failed pack.

Sparing Examples

This section provides guidelines to help you determine how many spare circuit packs or units to order for Metropolis® EON.

The following numbered procedure shows how to use Table 7-22, Figure 7-5, “Sparing Chart -- 10-Day Lead Time”, and Figure 7-6, “Circuit Pack Sparing Chart -- 64-Day Lead Time” in this section to determine how many spare circuit packs to order to maintain 99.9% service continuity for either a 10-day or 64-day lead time.

1. Refer to Table 7-22 and determine the circuit pack FIT rate. For example, the circuit pack FIT rate for SYSMEM (LEA2) is 1600.
2. Select the chart corresponding to one of the following lead times:
   - 10-day lead time– Figure 7-5
   - 64-day lead time– Figure 7-6
3. Refer to the chart and select the curve that represents the nearest circuit pack FIT rate. For example, the nearest curve for a FIT rate of 1149 (SYSMEM circuit pack) is 1000.
4. Follow the curve to the intersection with the vertical line that represents the number of circuit packs in service at a given location. For example, 100 circuit packs in service.

5. The horizontal line immediately above the intersection represents the minimum number of circuit pack spares recommended for that location. For example, with 100 circuit packs in service at Location A, the FIT rate is 1149 and the lead time is 10 days (see Figure 7-5, “Sparing Chart -- 10-Day Lead Time”). In this case, you would need to order and stock two spare circuit packs at Location A.

Table 7-22 Circuit Pack FIT Rates for Metropolis® EON/OTU

Description	Code	FIT[1]
Metropolis® EON		
SYSCTL	LEA1	1374
SYSMEM	LEA2	1149
TOHCTL	LEA102	1000
TLM	LDA4	1414
IAOLRP	LDA3	500
ODU (16λ)	606A, 606B	403
ODU (32λ)	607A, 607B, 608A, and 608B	403[2]
OMU (32λ)	507A, 507B, 508A, and 508B	247[2]
OA	LEA7B, LEA107B	4724
OA2	LEA207	4724[2]
OA3	LEA307	4924[2]
LIRCV	LEA209	430[2]
LIHTR	LEA210	380[2]
LITX	LEA211	430[2]
OT		
OTCTL	LUD1	802
OUPSR	LEP2, LEP3	750[2]
OTU OTPM OTPM UBB (add)	41A(1-16)C,41C(1-16)C, and 41F(1-16) 46A(-32)[2] 47A(1-32)[2]	1425

Description	Code	FIT[1]
OTU OTPM25 OTPM DUBB (drop)	41BB 46B[2] 47B[2]	1329
OTPM (OC-12/STM-4) OTPM LSBB (100 Mb/s - 750 Mb/s) OTPM ELSBB (16 Mb/s - 1.062 Gb/s)	42A(1-16)B, 42B, 44A(1-16)B, 44B 44C(1-16), 44BC	1500
OTPM (OC-3/STM-1)	43A(1-16)B, 43B	1000
QOTU/QOTU25/QOTUUB	41S, 41T[2], 41U[2]	705
Muxing OTU	41M(1-32)[2]	10,500[2]
10G OTU (add and through)	41H(1-32)A[2], 41H(1-32)C[2]	5,500[2]
10G OTU (drop)	41HB[2]	4,500[2]

Notes:

1. Based on the Lucent Technologies Reliability Information Notebook, 7th Edition, August 1995.
2. Estimate based on FIT rates for similar technology.

Figure 7-5 Sparing Chart -- 10-Day Lead Time

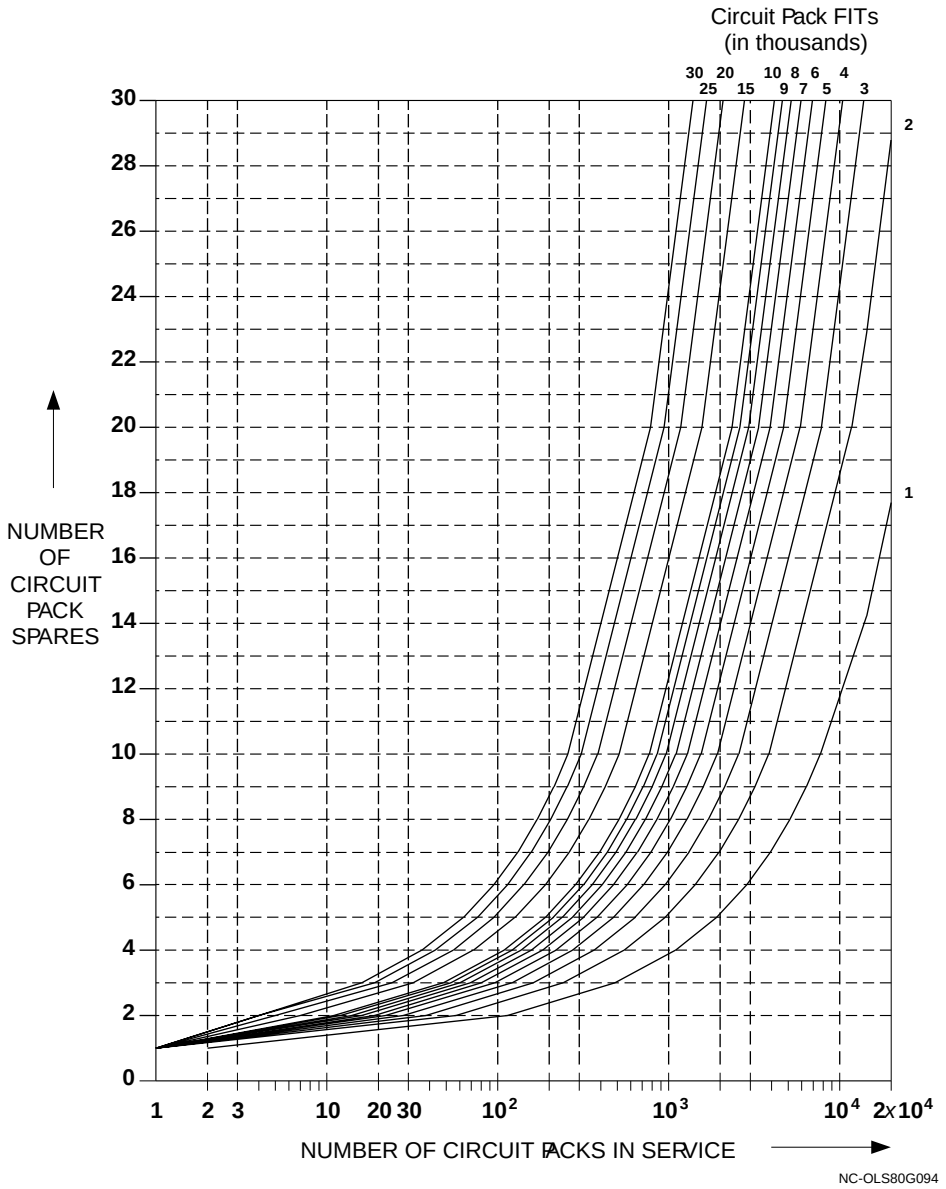

Figure 7-6 Circuit Pack Sparing Chart -- 64-Day Lead Time

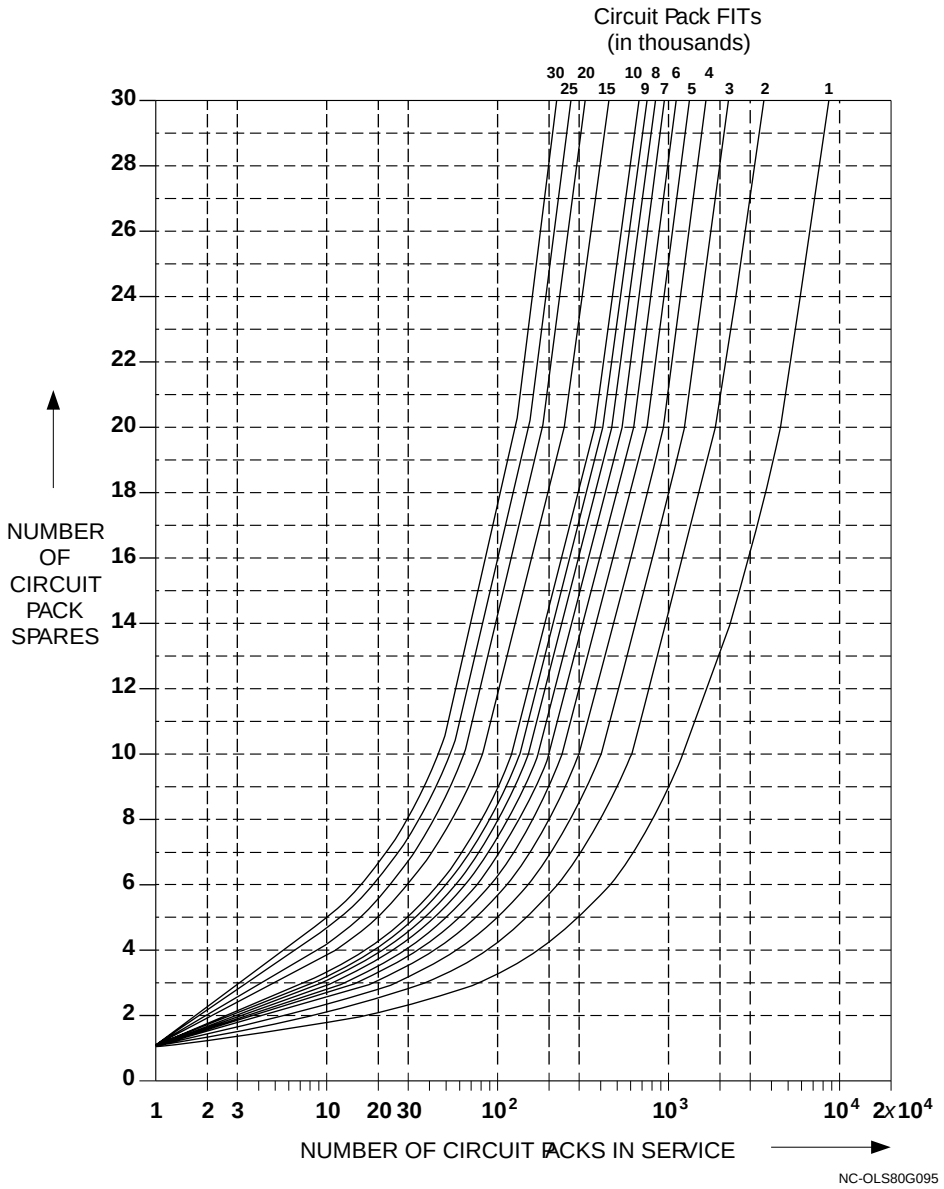

How to Order Spare Circuit Packs

The following table lists the information for ordering spare circuit packs which includes comcodes and CLEI codes. Note that these numbers are subject to change.

Table 7-23 Circuit Pack Ordering Information

Circuit Pack	Code	Connector Type	Comcode	CLEI
Control Circuit Packs				
SYSCTL	LEA1	Not Applicable	107272510	SNC3SH0A
SYSMEM	LEA2	Not Applicable	107786568	SNC3TJTA
TOHCTL	LEA102	Not Applicable	107822819	SNPQB3HA
TLM	LDA4	ST	108364084	SNCSMS0C
TLM	LDA4	SC	109182063	SNCSMS0C
IAOLRP	LDA3	Not Applicable	107822967	SNPQB5JA
OTCTL	LUD1	Not Applicable	108056284	LGR1JN0EAA
Transmission (OMU/ODU/OA) Circuit Packs				
OMU (16λ)	506A	LC	109024430	FHUMDB0GAA
OMU (16λ)	507A	LC	109048140	FHUMDBCGAA
OMU (16λ)	507B	LC	109077156	WMD5EMGEAA
OMU (32λ)	508A	LC	109048157	FHUMDBCGAA
OMU (32λ)	508B	LC	109077164	WMD5EMGEAA
ODU (16λ)	606A	LC	109024448	FHUMEB0GAA
ODU (16λ)	606B	LC	109038679	FHUMEBBGAA
ODU (16λ)	607A	LC	109048165	FHUMEBCGAA
ODU (16λ)	607B	LC	109077172	WMD5DMGEAA
ODU (32λ)	608A	LC	109048173	FHUMEBCGAA
ODU (32λ)	608B	LC	109077180	WMD5DMGEAA
OA (Long Reach)	LEA7B	ST SC	108309949 108904616	SNC7RR3C

Circuit Pack	Code	Connector Type	Comcode	CLEI
OA (Long Span)	LEA107B	ST	108680547	SNAPDS0AAA
OA2	LEA207	SC	109055582	WMD5DMGEAA
OA3	LEA307	SC	109128520	WMAMF90CAA
LIRCV	LEA209	SC	109063099	FHCEEP0GAA
LIHTR	LEA210	SC	109063107	WMPQAGTCAA
LITX	LEA211	SC	109063115	WMTGH03AAA
Transmission Circuit Packs				
OUPSR	LEP2	SC	109077198	WMPQAFTCAA
OUPSR	LEP3	SC	109198101	WMPQAFTCAA
OTU	41A1C	ST SC	108187949 108904970	SNOTABAA
OTU	41A2C	ST SC	108187956 108904988	SNOTACAA
OTU	41A3C	ST SC	108187964 108904996	SNOTADAA
OTU	41A4C	ST SC	108187972 108905001	SNOTAEAA
OTU	41A5C	ST SC	108187980 108905019	SNOTAFAA
OTU	41A6C	ST SC	108187998 108905027	SNOTAGAA
OTU	41A7C	ST SC	108188004 108905035	SNOTAHAA
OTU	41A8C	ST SC	108188012 108905043	SNOTAJAA
OTU	41A9C	ST SC	108188020 108905050	SNOTAKAA
OTU	41A10C	ST SC	108188038 108905068	SNOTALAA
OTU	41A11C	ST SC	108188046 108905076	SNOTAMAA

Circuit Pack	Code	Connector Type	Comcode	CLEI
OTU	41A12C	ST SC	108188053 108905084	SNOTANAA
OTU	41A13C	ST SC	108188061 108905092	SNOTAPAA
OTU	41A14C	ST SC	108188079 108905100	SNOTARAA
OTU	41A15C	ST SC	108188087 108905118	SNOTASAA
OTU	41A16C	ST SC	108188095 108905126	SNOTATAA
OTU	41BB	ST SC	108128737 108905134	SNP2V0XD
OTU	41C1C	ST	108188111	SNOTBBAA
OTU	41C2C	ST	108188129	SNOTBCAA
OTU	41C3C	ST	108188137	SNOTBDAA
OTU	41C4C	ST	108188145	SNOTBEAA
OTU	41C5C	ST	108188152	SNOTBFAA
OTU	41C6C	ST	108188160	SNOTBGAA
OTU	41C7C	ST	108188178	SNOTBHAA
OTU	41C8C	ST	108188186	SNOTBJAA
OTU	41C9C	ST	108188194	SNOTBKAA
OTU	41C10C	ST	108188202	SNOTBLAA
OTU	41C11C	ST	108188210	SNOTBMAA
OTU	41C12C	ST	108188228	SNOTBNAA
OTU	41C13C	ST	108188236	SNOTBPAA
OTU	41C14C	ST	108188244	SNOTBRAA
OTU	41C15C	ST	108188251	SNOTBSAA
OTU	41C16C	ST	108188269	SNOTBTAA
OTU	41F1	ST SC	108584210 108905142	SNO1CM0AAB

Circuit Pack	Code	Connector Type	Comcode	CLEI
OTU	41F2	ST SC	108584228 108905159	SNO1CN0AAB
OTU	41F3	ST SC	108584236 108905167	SNO1CP0AAB
OTU	41F4	ST SC	108584244 108905175	SNO1CR0AAB
OTU	41F5	ST SC	108584251 108905191	SNO1CS0AAB
OTU	41F6	ST SC	108584269 108905209	SNO1CT0AAB
OTU	41F7	ST	108584277 108905217	SNO1CU0AAB
OTU	41F8	ST SC	108584285 108905225	SNO1CV0AAB
OTU	41F9	ST SC	108584806 108905233	SNO1CW0AAB
OTU	41F10	ST SC	108584814 108905241	SNO1CX0AAB
OTU	41F11	ST SC	108584822 108905258	SNO1CY0AAB
OTU	41F12	ST SC	108584830 108905266	SNO1CZ0AAB
OTU	41F13	ST SC	108584848 108905274	SNO1C10AAB
OTU	41F14	ST SC	108584855 108905282	SNO1C20AAB
OTU	41F15	ST SC	108584871 108905290	SNO1C30AAB
OTU	41F16	ST SC	108584877 108905308	SNO1C40AAB
OTU	41G	ST SC	108585928 108905316	SNO1C50AAB
10G OTU	41H1A	SC	109177881	WM3WUM0BAA
10G OTU	41H2A	SC	109177899	WM3WUK0BAA

Circuit Pack	Code	Connector Type	Comcode	CLEI
10G OTU	41H3A	SC	109177907	WM3WU0HBAA
10G OTU	41H4A	SC	109177915	WM3WUH0BAA
10G OTU	41H5A	SC	109177923	WM3WUF0BAA
10G OTU	41H6A	SC	109177931	WM3WUD0BAA
10G OTU	41H7A	SC	109177949	WM3WUB0BAA
10G OTU	41H8A	SC	109177956	WM3WU0JBAA
10G OTU	41H9A	SC	109177964	WM3WUN0BAA
10G OTU	41H10A	SC	109177972	WM3WUL0BAA
10G OTU	41H11A	SC	109177980	WM3WUJ0BAA
10G OTU	41H12A	SC	109177998	WMW9P0RAAA
10G OTU	41H13A	SC	109178004	WM3WUG0BAA
10G OTU	41H14A	SC	109178012	WM3WUE0BAA
10G OTU	41H15A	SC	109178020	WM3WUC0BAA
10G OTU	41H16A	SC	109178038	WM3WUA0BAA
10G OTU	41H17A	SC	109178046	WM3WUT0BAA
10G OTU	41H18A	SC	109178053	WM3WUU0BAA
10G OTU	41H19A	SC	109178061	WM3WUV0BAA
10G OTU	41H20A	SC	109178079	WM3WUW0BAA
10G OTU	41H21A	SC	109178087	WM3WUX0BAA
10G OTU	41H22A	SC	109178095	WM3WUY0BAA
10G OTU	41H23A	SC	109178103	WM3WUZ0BAA
10G OTU	41H24A	SC	109178111	WM3WU10BAA
10G OTU	41H25A	SC	109178129	WMW9PN0AAA
10G OTU	41H26A	SC	109178137	WM5WS05AAA
10G OTU	41H27A	SC	109178145	WM3WU20BAA
10G OTU	41H28A	SC	109178152	WM3WU30BAA
10G OTU	41H29A	SC	109178160	WM3WU40BAA
10G OTU	41H30A	SC	109178178	WM3WU50BAA

Circuit Pack	Code	Connector Type	Comcode	CLEI
10G OTU	41H31A	SC	109178186	WM3WU70BAA
10G OTU	41H32A	SC	109178194	WM3WU80BAA
10G OTU	41HB	SC	109178202	WM6WLN0AAA
10G OTU	41H1C	SC	109178210	WM3WTM0BAA
10G OTU	41H2C	SC	109178228	WM3WTK0BAA
10G OTU	41H3C	SC	109178236	WM3WT0HBAA
10G OTU	41H4C	SC	109178244	WM3WTH0BAA
10G OTU	41H5C	SC	109178251	WM3WTF0BAA
10G OTU	41H6C	SC	109178269	WM3WTD0BAA
10G OTU	41H7C	SC	109178277	WM3WTB0BAA
10G OTU	41H8C	SC	109178285	WM3WT0JBAA
10G OTU	41H9C	SC	109178293	WM3WTN0BAA
10G OTU	41H10C	SC	109178301	WM3WTL0BAA
10G OTU	41H11C	SC	109178319	WM3WTJ0BAA
10G OTU	41H12C	SC	109178327	WMW9N0RAAA
10G OTU	41H13C	SC	109178335	WM3WTG0BAA
10G OTU	41H14C	SC	109178343	WM3WTE0BAA
10G OTU	41H15C	SC	109178350	WM3WTC0BAA
10G OTU	41H16C	SC	109178368	WM3WTA0BAA
10G OTU	41H17C	SC	109178376	WM3WTT0BAA
10G OTU	41H18C	SC	109178384	WM3WTU0BAA
10G OTU	41H19C	SC	109178392	WM3WTV0BAA
10G OTU	41H20C	SC	109178400	WM3WTW0BAA
10G OTU	41H21C	SC	109178418	WM3WTX0BAA
10G OTU	41H22C	SC	109178426	WM3WTY0BAA
10G OTU	41H23C	SC	109178434	WM3WTZ0BAA
10G OTU	41H24C	SC	109178442	WM3WT10BAA
10G OTU	41H25C	SC	109178459	WMW9NN0AAA

Circuit Pack	Code	Connector Type	Comcode	CLEI
10G OTU	41H26C	SC	109178467	WM5WR05AAA
10G OTU	41H27C	SC	109178475	WM3WT20BAA
10G OTU	41H28C	SC	109178483	WM3WT30BAA
10G OTU	41H29C	SC	109178491	WM3WT40BAA
10G OTU	41H30C	SC	109178509	WM3WT50BAA
10G OTU	41H31C	SC	109178517	WM3WT70BAA
10G OTU	41H32C	SC	109178525	WM3WT80BAA
2DM25	41M1	SC	109180208	WM3WVM0BAA
2DM25	41M2	SC	109180216	WM3WVK0BAA
2DM25	41M3	SC	109180224	WM3WV0HBAA
2DM25	41M4	SC	109180232	WM3WVH0BAA
2DM25	41M5	SC	109180240	WM3WVF0BAA
2DM25	41M6	SC	109180257	WM3WVD0BAA
2DM25	41M7	SC	109180265	WM3WVB0BAA
2DM25	41M8	SC	109180273	WM3WV0JBAA
2DM25	41M9	SC	109180281	WM3WVN0BAA
2DM25	41M10	SC	109180299	WM3WVL0BAA
2DM25	41M11	SC	109180307	WM3WVJ0BAA
2DM25	41M12	SC	109180315	WMW9R0RAAA
2DM25	41M13	SC	109180323	WM3WVG0BAA
2DM25	41M14	SC	109180331	WM3WVE0BAA
2DM25	41M15	SC	109180349	WM3WVC0BAA
2DM25	41M16	SC	109180356	WM3WVA0BAA
2DM25	41M17	SC	109180364	WM3WVT0BAA
2DM25	41M18	SC	109180372	WM3WVU0BAA
2DM25	41M19	SC	109180380	WM3WVV0BAA
2DM25	41M20	SC	109180398	WM3WVW0BAA
2DM25	41M21	SC	109180406	WM3WVX0BAA

Circuit Pack	Code	Connector Type	Comcode	CLEI
2DM25	41M22	SC	109180414	WM3WVY0BAA
2DM25	41M23	SC	109180422	WM3WVZ0BAA
2DM25	41M24	SC	109180430	WM3WV10BAA
2DM25	41M25	SC	109180448	WMW9RN0AAA
2DM25	41M26	SC	109180455	WMW3GY0AAA
2DM25	41M27	SC	109180463	WM3WV20BAA
2DM25	41M28	SC	109180471	WM3WV30BAA
2DM25	41M29	SC	109180489	WM3WV40BAA
2DM25	41M30	SC	109180497	WM3WV50BAA
2DM25	41M31	SC	109180505	WM3WV70BAA
2DM25	41M32	SC	109180513	WM3WV0EBAA
QOTU	41S	Not Applicable	108022823	SNC6101E
QOTU25	41T	Not Applicable	109051524	WM1CGH0BAA
QOTUUB	41U	Not Applicable	109177311	WM1CGH2BAA
OTPM	42A1B	ST SC	108187063 108904731	SNC670RE
OTPM	42A2B	ST SC	108187071 108904749	SNC670SE
OTPM	42A3B	ST SC	108187089 108904756	SNC670TE
OTPM	42A4B	ST SC	108187097 108904764	SNC670UE
OTPM	42A5B	ST SC	108187105 108904772	SNC670VE
OTPM	42A6B	ST SC	108187113 108904780	SNC670WE
OTPM	42A7B	ST SC	108187121 108904798	SNC670XE

Circuit Pack	Code	Connector Type	Comcode	CLEI
OTPM	42A8B	ST SC	108187139 108904806	SNC670YE
OTPM	42A9B	ST SC	108187147 108904814	SNC670GE
OTPM	42A10B	ST SC	108187196 108904822	SNC670HE
OTPM	42A11B	ST SC	108187204 108904830	SNC670JE
OTPM	42A12B	ST SC	108187212 108904848	SNC670KE
OTPM	42A13B	ST SC	108187220 108904624	SNC670LE
OTPM	42A14B	ST SC	108187238 108904632	SNC670ME
OTPM	42A15B	ST SC	108187246 108904640	SNC670NE
OTPM	42A16B	ST SC	108187253 108904657	SNC670PE
OTPM	42B	ST SC	108023334 108904665	SNC670ZE
OTPM	43A1B	ST	108187261	SNC660RE
OTPM	43A2B	ST	108187279	SNC660SE
OTPM	43A3B	ST	108187287	SNC660TE
OTPM	43A4B	ST	108187295	SNC660UE
OTPM	43A5B	ST	108187303	SNC660VE
OTPM	43A6B	ST	108187311	SNC660WE
OTPM	43A7B	ST	108187329	SNC660XE
OTPM	43A8B	ST	108187337	SNC660YE
OTPM	43A9B	ST	108187345	SNC660GE
OTPM	43A10B	ST	108187352	SNC660HE
OTPM	43A11B	ST	108187360	SNC660JE
OTPM	43A12B	ST	108187378	SNC660KE

Circuit Pack	Code	Connector Type	Comcode	CLEI
OTPM	43A13B	ST	108187386	SNC660LE
OTPM	43A14B	ST	108187394	SNC660ME
OTPM	43A15B	ST	108187402	SNC660NE
OTPM	43A16B	ST	108187410	SNC660PE
OTPM	43B	ST	108023359	SNC660ZE
OTPM	44A1B	ST SC	108187436 108904855	SNP2TYED
OTPM	44A2B	ST SC	108187444 108904863	SNP2TYFD
OTPM	44A3B	ST SC	108187451 108904871	SNP2TYGD
OTPM	44A4B	ST SC	108187469 108904889	SNP2TYHD
OTPM	44A5B	ST SC	108187477 108904897	SNP2TYJD
OTPM	44A6B	ST SC	108187485 108904905	SNP2TYKD
OTPM	44A7B	ST SC	108187493 108904913	SNP2TYLD
OTPM	44A8B	ST SC	108187501 108904921	SNP2TYMD
OTPM	44A9B	ST SC	108187519 108904939	SNP2TYND
OTPM	44A10B	ST SC	108187527 108904947	SNP2TYPD
OTPM	44A11B	ST SC	108187535 108904954	SNP2TYRD
OTPM	44A12B	ST SC	108187543 108904962	SNP2TYSD
OTPM	44A13B	ST SC	108187550 108904673	SNP2TYTD
OTPM	44A14B	ST SC	108187568 108904681	SNP2TYUD

Circuit Pack	Code	Connector Type	Comcode	CLEI
OTPM	44A15B	ST SC	108187584 108904699	SNP2TYVD
OTPM	44A16B	ST SC	108187592 108904707	SNP2TYWD
OTPM	44B	ST SC	108089467 108904715	SNP2TYXD
OTPM	44C1	SC	108187436	WM3WXM0BAA
OTPM	44C2	SC	109209023	WM3WXK0BAA
OTPM	44C3	SC	109209031	WM3WX0HBAA
OTPM	44C4	SC	109209049	WM3WXH0BAA
OTPM	44C5	SC	109209056	WM3WXF0BAA
OTPM	44C6	SC	109209064	WM3WXD0BAA
OTPM	44C7	SC	109209072	WM3WXB0BAA
OTPM	44C8	SC	109209080	WM3WX0JBAA
OTPM	44C9	SC	109209098	WM3WXN0BAA
OTPM	44C10	SC	109209106	WM3WXL0BAA
OTPM	44C11	SC	109209114	WM3WXJ0BAA
OTPM	44C12	SC	109209122	WMW9U0RAAA
OTPM	44C13	SC	109209130	WM3WXG0BAA
OTPM	44C14	SC	109209148	WM3WXE0BAA
OTPM	44C15	SC	109209155	WM3WXC0BAA
OTPM	44C16	SC	109209163	WM3WXA0BAA
OTPM	44BC	SC	109209171	WMW3J70AAA
OTPM25	46A1	SC	109091850	WM3WHM0BAA
OTPM25	46A2	SC	109091868	WM3WHK0BAA
OTPM25	46A3	SC	109091876	WM3WH0HBAA
OTPM25	46A4	SC	109091884	WM3WHH0BAA
OTPM25	46A5	SC	109091892	WM3WHF0BAA
OTPM25	46A6	SC	109091900	WM3WHD0BAA

Circuit Pack	Code	Connector Type	Comcode	CLEI
OTPM25	46A7	SC	109091918	WM3WHB0BAA
OTPM25	46A8	SC	109091926	WM3WH0JBAA
OTPM25	46A9	SC	109091934	WM3WHN0BAA
OTPM25	46A10	SC	109091942	WM3WHL0BAA
OTPM25	46A11	SC	109091959	WM3WHJ0BAA
OTPM25	46A12	SC	109091967	WMW9D0RAAA
OTPM25	46A13	SC	109091975	WM3WHG0BAA
OTPM25	46A14	SC	109091983	WM3WHE0BAA
OTPM25	46A15	SC	109091991	WM3WHC0BAA
OTPM25	46A16	SC	109092007	WM3WHA0BAA
OTPM25	46A17	SC	109107938	WM3WKT0BAA
OTPM25	46A18	SC	109107946	WM3WKU0BAA
OTPM25	46A19	SC	109107953	WM3WKV0BAA
OTPM25	46A20	SC	109107961	WM3WKW0BAA
OTPM25	46A21	SC	109107979	WM3WKX0BAA
OTPM25	46A22	SC	109107987	WM3WKY0BAA
OTPM25	46A23	SC	109107995	WM3WKZ0BAA
OTPM25	46A24	SC	109108001	WM3WK10BAA
OTPM25	46A25	SC	109108019	WM5WG04AAA
OTPM25	46A26	SC	109108027	WM5WG05AAA
OTPM25	46A27	SC	109108035	WM3WK20BAA
OTPM25	46A28	SC	109108043	WM3WK30BAA
OTPM25	46A29	SC	109108050	WM3WK40BAA
OTPM25	46A30	SC	109108068	WM3WK50BAA
OTPM25	46A31	SC	109108076	WM3WK70BAA
OTPM25	46A32	SC	109108084	WM3WK80BAA
OTPM25	46B	SC	109092015	WMW3D70AAA
OTPM UBB	47A1	SC	109153437	WM3WRM0BAA

Circuit Pack	Code	Connector Type	Comcode	CLEI
OTPM UBB	47A2	SC	109153445	WM3WRK0BAA
OTPM UBB	47A3	SC	109153452	WM6WJY0AAA
OTPM UBB	47A4	SC	109153460	WM3WRH0BAA
OTPM UBB	47A5	SC	109153478	WM3WRF0BAA
OTPM UBB	47A6	SC	109153486	WM3WRD0BAA
OTPM UBB	47A7	SC	109153494	WM3WRB0BAA
OTPM UBB	47A8	SC	109153502	WM3WR0JBAA
OTPM UBB	47A9	SC	109153510	WM3WRN0BAA
OTPM UBB	47A10	SC	109153528	WM3WRL0BAA
OTPM UBB	47A11	SC	109153536	WM3WRJ0BAA
OTPM UBB	47A12	SC	109153544	WMW9H0RAAA
OTPM UBB	47A13	SC	109153551	WM3WRG0BAA
OTPM UBB	47A14	SC	109153569	WM3WRE0BAA
OTPM UBB	47A15	SC	109153577	WM3WRC0BAA
OTPM UBB	47A16	SC	109153585	WM3WRA0BAA
OTPM UBB	47A17	SC	109153593	WM3WRT0BAA
OTPM UBB	47A18	SC	109153601	WM3WRU0BAA
OTPM UBB	47A19	SC	109153619	WM3WRV0BAA
OTPM UBB	47A20	SC	109153627	WM3WRW0BAA
OTPM UBB	47A21	SC	109153635	WM3WRX0BAA
OTPM UBB	47A22	SC	109153643	WM3WRY0BAA
OTPM UBB	47A23	SC	109153650	WM3WRZ0BAA
OTPM UBB	47A24	SC	109153668	WM3WR10BAA
OTPM UBB	47A25	SC	109153676	WMW9HN0AAA
OTPM UBB	47A26	SC	109153684	WM5WJ05AAA
OTPM UBB	47A27	SC	109153692	WM3WR20BAA
OTPM UBB	47A28	SC	109153700	WM3WR30BAA
OTPM UBB	47A29	SC	109153718	WM3WR40BAA

Circuit Pack	Code	Connector Type	Comcode	CLEI
OTPM UBB	47A30	SC	109153726	WM3WR50BAA
OTPM UBB	47A31	SC	109153734	WM3WR70BAA
OTPM UBB	47A32	SC	109153742	WM3WR80BAA
OTPM DUBB	47B	SC	109153841	WMW3F70AAA
DCM	EONDCM2.5	SC	109199612	WM7CBMEBAA
DCM	EONDCM5.0	SC	109199620	WM7CBNEBAA
DCM	EONDCM7.5	SC	109199638	WM7CBPEBAA
DCM	EONDCM10	SC	109199646	WM7CBBEBAA
DCM	EONDCM20	SC	109199653	WM7CBCEBAA
DCM	EONDCM30	SC	109199661	WM7CBDEBAA
DCM	EONDCM40	SC	109199679	WM7CBEEBAA
DCM	EONDCM50	SC	109199778	WM7CBFEBAA
DCM	EONDCM60	SC	109199703	WM7CBGEBAA
DCM	EONDCM70	SC	109199711	WM7CBHEBAA
DCM	EONDCM80	SC	109199729	WM7CBJEBAA
DCM	EONDCM90	SC	109199737	WM7CBKEBAA
DCM	EONDCM100	SC	109199745	WM7CBLEBAA

8 Product Support

Overview

Purpose

This chapter describes the support services available to Lucent Technologies' customers.

Lucent Technologies offers a number of services to assist customers with Engineering, Installation and Technical Support of their networks. Additionally, Lucent Technologies offers product-specific training courses.

Contents

The following topics are discussed in this chapter:

Worldwide Services	8-2
Training	8-4

Worldwide Services

Overview

Lucent Worldwide Services provides a full life-cycle of services and solutions to help you plan, design, implement, and operate your network in today's rapidly changing and complex environment.

Engineering Services

Engineering Services provide information and technical support to customers during the planning, implementation, and placement of equipment into new or existing networks. We determine the best, most economical equipment solution for a customer and help ensure equipment is configured correctly for the customer’s network needs, works as specified, and is ready for installation on delivery. These services consist of the following:

- Equipment engineering
- Software engineering
- Site records
- Engineering consulting
- Additional engineering services (for example, Network Realignment, System Capacity Planning, System Health Assessment

Installation Services

Lucent Technologies offers Installation Services focused on providing the technical support and resources customers need to efficiently and cost-effectively install their network equipment. We offer a variety of options that provide extensive support and deliver superior execution to help ensure the system hardware is installed, tested, and functioning as engineered and specified. Installation Services provides a complete flexible solution tailored to meet customers' specific needs. These services consist of the following:

- Equipment installation
- Specialized equipment installation
- Network connectivity services
- Installation support services

Technical Support

Lucent Technologies provides the following Technical Support Services:

- Remote Technical Support (RTS) - remote technical support to troubleshoot and resolve system problems.
- On-site Technical Support (OTS) - on-site assistance with operational issues and remedial maintenance.
- Repair and Replacement (R&R) - technical support services for device repair/return or parts replacement.
- Lucent OnLine Customer Support - online access to information and services that can help resolve technical support requests.

Important! Technical Support Services are available 24 hours a day, 7 days a week.

SONET customers

Technical Support Services can be reached at **1-866-LUCENT8** (866-582-3688): *Prompt 1*.

SDH customers

Technical Support Services can be reached at **+1-630-224-4672**: *Prompt 2*.

Web-Site

For additional information regarding Worldwide Services, refer to the Lucent Technologies' web-site at **http://www.lucent.com/products**

1. Click on **Browse the catalog**
2. Click on **Worldwide Services Solutions**
3. Select the desired service to display:
   - Engineering and Installation
   - Technical Support Services

□

Training

Overview

Lucent Technologies offers a formal training curriculum to complement your product needs.

Registering for a course

To review the available courses or to enroll in a training course at one of Lucent's corporate training centers,

- Within the United States,
  - Visit **https://www.lucent-product-training.com**
  - Call **1-888-LUCENT8** (888-582-3688): *Prompt 2*.
- Outside the continental United States,
  - Visit **https://www.lucent-product-training.com**
  - Contact your in-country training representative
  - Call: **+1-407-767-2798**
  - Fax: **+1-407-767-2677**

Suitcasing

To arrange for a suitcase session at your facility,

- Within the United States, call **1-888-LUCENT8** (888-582-3688): *Prompt 2*.
- Outside the continental United States,
  - Contact your in-country training representative
  - Call: **+1-407-767-2798**
  - Fax: **+1-407-767-2677**

□

9 Quality and Reliability

Overview

Purpose This chapter contains quality and reliability information and specifications for the Metropolis® EON including the Optical Translator Unit (OTU) and Optical Translator Port Modules (OTPM). Telcordia Technical Reference 253 (GR 253) is the basis for this information.

Contents The following sections are contained in this chapter:

Lucent's Commitment to Quality and Reliability	9-2
Quality and Reliability Information	9-4

Lucent's Commitment to Quality and Reliability

Overview

This section describes the critical elements that ensure product quality within product development and manufacturing.

Quality

Lucent Technologies is committed to achieving sustained business excellence by integrating quality principles and methods into all we do at every level of our company to:

- Anticipate and meet customer needs and exceed their expectations, every time
- Relentlessly improve how we work - to deliver the world's best and most innovative communications solutions - faster and more cost-effectively than our competitors

Important! Independent quality representatives are also present at manufacturing locations to ensure "Shipped Product Quality". Vendors are approved based on stringent quality criteria.

Reliability

Reliability is a key ingredient of a product's life cycle, beginning with the earliest planning stage and continuing into a wide range of functional areas. These areas include product architecture, design and simulation, documentation, prototyping, design change control, manufacturing and product testing (including 100% screening), product quality assurance, product field performance, and product field return management. Each stage in the product's life cycle relies on people and processes that contribute to product reliability growth with customer satisfaction as the primary goal.

Using critical elements to ensure the product's reliability, product development requires strict adherence to the following guidelines:

- Design standards
- Design and test practices
- Comprehensive qualification programs
- System-level reliability integration
- Reliability audits and predictions
- Development of assurance standards for the manufactured product.

During manufacturing and field deployment, the reliability of Metropolis® EON is further enhanced by the following processes:

- Pre-manufacturing qualification
- Vendor qualification
- Quality improvement based on manufacturing and field data
- Feedback and corrective actions.

□

Quality and Reliability Information

Introduction

The following section gives the quality and reliability information for the Metropolis® EON.

Infant Mortality and Design Life

Metropolis® EON equipment has an infant mortality rate of ≤ 1.6 multiplied by the steady state failure rate. The equipment's design life is 25 years.

Warranty

The terms and conditions of sale are negotiated within the customer contract.

FIT Rates

The following table[1] lists failures-in-time (FIT) rates for Metropolis® EON and OTU circuit packs.

Table 9-1 Circuit Pack FIT Rates per Telcordia RPP

Description	Code	FIT
Metropolis® EON		
SYSCTL	LEA1	3387
SYSMEM	LEA2	7118
TOHCTL (LEA102)	LEA102	2500
IAOLRP	LDA3	1000
ODU (16λ)	606A, 606C	3443
ODU (16λ)	606B, 606D	3694
ODU (32 λ)	607A, 608A	3443[2]
ODU (32 λ)	607B, 608B	3694[2]
OMU (16λ)	506A, 506B	2141
OMU (32λ)	507A, 508A, 507B, 508B	2141[2]
OA	LEA7B, LEA107B	16,848
OA2	LEA207	16,848
OA3	LEA307	16,848[2]
LIRCV	LEA209	3694
LIHTR	LEA210	3694[2]

Description	Code	FIT
LITX	LEA211	3694
TLM	LDA1, LDA4	6625
OTCTL	LUD1	2723
OUPSR	LEP2, LEP3	2472[2]
Metropolis® EON OT		
OTU (OC-192/STM-64)	41H(1-32)A, 41H(1-32)C	8000[2]
OTU (OC-192/STM-64)	41HB	7500[2]
OTU (OC-48/STM-16)	41A(1-16)C, 41C(1-16)C, 41C(1-16)E, 41D(1-16), and 41E	7272
OTU (OC-48/STM-16)	41BB	6772
OTU (Ethernet 1.25 Gb/s)	41F(1-16)	7272
OTU (Ethernet 1.25 Gb/s)	41G	6772
QOTU	41S	2129
QOTU25	41T	2629[2]
QOTUUB	41U	2629[2]
OTPM (OC-12/STM-4)	42A(1-16)B, 42B	6000
OTPM (OC-3/STM-1)	43A(1-16)B, 43B	3000
OTPM (LSBB, 100 Mb/s - 750 Mb/s)	44A(1-16)B, 44B	6000
OTPM (ELSBB, 16 Mb/s - 1.062 Gb/s)	44C(1-16), 44BC	6000
OTPM 25 (OC-48/STM-16)	46A(1-32), 46B	6600[2]
OTPM UBB (add) OTPM DUBB (drop) 16 Mb/s - 2.5 Gb/s	47A(1-32) 47B	6600[2]
Muxing (2DM25) OTU 2.5 Gb/s	41M(1-32)	10000[2]

Notes:

1. Based on Method I of the Reliability Prediction Procedure for

Electronic Equipment, Issue 5, December 1995.
2. Estimates based on FIT rates for similar technologies.

Maintainability Specifications

Metropolis® EON requires no periodic maintenance. Continuous performance monitoring allows Metropolis® EON to detect problems before they become service-affecting.

Unavailability Specifications

Hardware unavailability is based on Reliability Prediction Procedure for Electronic Equipment, Issue 5, December 1995 and a mean-time-to-repair (MTTR) of less than or equal to two hours.

The following table shows Metropolis® EON and OT channel unavailability.

Table 9-2 Channel Unavailability (min/year/channel)

Description	Value
Metropolis® EON	
1 Line (Dual Facing) End Terminal	0.003
2 Line End Terminal[1]	0.003
2 Line Repeater[1]	0.002
OT	
OC-192/STM-64 Channel (OT)	0.00040[2]
OC-48/STM-16 Channel (OT)	0.00027
Ethernet 1.25 Gb/s, 16 Channel (OT)	0.00027
OC-12/STM-4 Channel (OTPM)	0.00015
LSBB, 100 Mb/s - 750 Mb/s Channel (OTPM)	0.00015
ELSBB, 16 Mb/s - 1.062 Gb/s Channel (OTPM)	0.00015
OC-3/STM-1 Channel (OTPM)	0.00004
OC-48/STM-16 Channel (OTPM 25)	0.00027[2]
16 Mb/s - 1.25 Gb/s Channel (OTPM UBB and OTPM DUBB)	0.00027[2]
2DM25 Muxing OTU	0.00027[2]

Notes:

1. Based on ADM protection.
2. Estimates based on values for similar technologies.

The following table shows telemetry channel unavailability (min/year/channel) for Metropolis® EON.

Table 9-3 Telemetry Channel Unavailability

Protection	End Terminal	Repeater
Independent	42	49
1 + 1	0.0017	0.0023

Silent Failure Unavailability

There is no silent failure unavailability for End Terminals, Repeaters, the OT, or OTPMs.

Mean-Time-Between-Maintenance

The following table shows the mean-time-between-maintenance activity for Metropolis® EON. These values are based on the Lucent Technologies Reliability Information Notebook, 7th edition, August 1995.

Table 9-4 Mean-Time-Between-Maintenance Activity

Equipment	Mean Time (months)
Metropolis® EON	
2 End Line Terminal	42
2 Line Repeater	40
Integrated Bay (Single)	19
Integrated Bay (Double)	14
OT	
OT Complementary Shelf (full)	58
OT System Controller Shelf (full, no controller circuit packs)	85
Fully equipped, 3-Shelf OT	22

10 Technical Specifications

Overview

Purpose This chapter contains the technical specifications for Metropolis® EON.

Contents The following sections are included in this chapter:

System Specifications	10-2
Optical Interface	10-3
Optical Power Specifications	10-9
Environmental Specifications	10-18
Operations Interfaces	10-20
Equipment Dimensions	10-22

Transmission Medium

The following types of transmission media can be used with Metropolis® EON:

- Standard single-mode fiber (SSMF)
- Non-zero dispersion-shifted fiber (for example: TrueWave®).

Cable Access

Metropolis® EON uses connectorized cabling that utilizes commercially available connectors. All customer access is front-oriented.

Optical Interface

Optical Connector Interfaces

Metropolis® EON circuit packs use ST®, FC, LC, or SC lightguide connectors.

Lightguide Jumpers

Single-mode lightguide jumpers are used on the OA and telemetry/ supervisory circuit packs. Multi-mode lightguide jumpers are used with the telemetry circuit packs. Refer to Chapter 7, “Ordering”, for information on ordering lightguide jumpers.

Optical Safety (BRH Classification)

Metropolis® EON meets the Class 1 optical safety standard.

The following table shows the optical safety data for the circuit packs that contain lasers.

Table 10-1 Optical Safety Data on Laser-Containing Circuit Packs

***Circuit Pack Code*[1,2,3]**	***FDA/IEC Classification*[4]**
LEA7B OA	Class IIIb
LEA107B OA	Class IIIb
LEA207 OA2, LEA307 OA3	Class IIIb/3B
LDA4 TLM	Class I
41H(1-32)A 10G OTUs, 41H(1-32)C 10G OTUs	Class I
41HB 10G OTU	Class IIIb
41A(1-16)C OTUs, 41C(1-16)C OTUs, 41M(1-32) OTUs, 46A1-32 OTPM25s, 46B OTPM25, 47A1-32 OTPM UBBs, 47B OTPM DUBB	Class I/1
41BB OTU	Class IIIb
41F1-16 OTUs	Class I
41G OTU	Class IIIb
(High Range) 42A1-16 OTPMs, 44A1-16 OTPMs, 44C1-16 OTPMs	Class I
42B OTPM, 44B OTPM, 44BC OTPM	Class IIIb
(Low Range) 43A1-16 OTPMs, 44A1-16 OTPMs, 44C1-16 OTPMs	Class I
43B OTPM, 44B OTPM, 44BC OTPM	Class IIIb

Notes:

1. All optical transmitter circuit packs utilize faceplate-mounted universal-type connector build-out blocks. These build-out blocks are normally equipped with lightguide buildouts (LBOs) with ST-type connectors, but the build-out blocks can also accommodate LBOs with the FC- and SC-type connectors.
2. The OA and OTU circuit packs use single mode fiber pigtails and jumpers with an 8.3 micron core diameter and 8.8 micron mode field diameter. Single mode fiber pigtails and jumpers are also used on the transmit side of the OTPMs. (Multimode fiber pigtails and jumpers are used on the TLM circuit packs and the receive side of the OTPMs.)
3. The OA2/OA3 and OTU circuit packs use single mode fiber pigtails and jumpers with a 9.7 micron core diameter and 11.5 micron mode field diameter. Single mode fiber pigtails and jumpers are also used on the transmit side of the OTPMs. (Multimode fiber pigtails and jumpers are used on the TLM circuit packs and the receive side of the OTPMs.)
4. The FDA/IEC classification for the entire system is Class I. The classifications listed above are for the individual circuit packs and modules.

Optical Dispersion

Refer to “Engineering Rules” in Chapter 5, “System Planning and Engineering.”

Optical Return Loss

The optical return loss (output power divided by reflected power) for Metropolis® EON is > 40 dB.

Optical Line Rate

Metropolis® EON supports an optical line rate of up to 320 Gb/s.

Capacity

The Metropolis® EON has a capacity of 32 wavelengths of 10 Gb/s for a total data rate of 320 Gb/s per fiber.

Transmission Standards Compliance

Metropolis® EON meets single-mode interoffice digital fiber optic systems requirements and objectives as specified in Telcordia GR 253 and TR 499.

The following table shows OA spacing for the Metropolis® EON.

Table 10-2 Minimum and Maximum OA Spacing

OA Spacing Parameter		$<10^{-9}$ accumulated error rate for systems up to 400 kilometers (250 miles)
16-channel Long Span OA (LEA107B)	Max	35 dB
	Min	22 dB
16-channel Long Reach OA (LEA7B)	Max	33 dB
	Min	22 dB
32-channel OA2 (LEA207)	Max	26 dB
	Min	19 dB
32-channel OA3 (LEA307)	Max	33 dB
	Min	22 dB

The following table lists the OMU/ODU insertion loss for Metropolis® EON.

Table 10-3 OMU/ODU Insertion Loss

Codes		Insertion Loss Specification
OMU	**ODU**	
506A	606A, 606B	≤ 14 dB
507A, 508A	607A, 608A	≤ 8 dB
507B, 508B	607B, 608B	≤ 5.5 dB

Optical Reflections Tolerance

The OA ports within Metropolis® EON tolerate up to -28.7 dB of reflectance.

Tone Frequencies

The following table shows approximate tone frequencies used for each wavelength.

Table 10-4 Tone Frequencies

Optical Channel	Wavelength (nm) ±0.16	Approximate Tone Frequency (Hz)	
		Signal Rate	
		> 1 Gb/s	< 1 Gb/s
1	1549.32	5273[1]	5078[1]
2	1550.92	6934[1]	6738[1]
3	1552.52	9277[1]	9082[1]
4	1554.13	11328[1]	11133[1]
5	1555.75	14746	14551
6	1557.37	17285	17090
7	1558.98	19336	19141
8	1560.61	21680	21484
9	1548.52	22754	22559
10	1550.12	23730	23535
11	1551.72	24707	24512
12	1553.33	25684	25488
13	1554.94	26660	26465
14	1556.56	27637	27441
15	1558.17	28613	28417
16	1559.79	29590	29394
17	1543.73	15625	15430
18	1542.94	16602	16406
19	1542.14	17773	17578
20	1541.35	18262	18066
21	1540.56	18848	18652
22	1539.77	19922	19727
23	1538.98	20605	20410

Optical Channel	Wavelength (nm) ±0.16	Approximate Tone Frequency (Hz)	
		Signal Rate	
		> 1 Gb/s	< 1 Gb/s
24	1538.19	21191	20996
25	1537.40	22168	21973
26	1536.61	23242	23047
27	1535.82	25195	25000
28	1535.04	26270	26074
29	1534.25	27051	26855
30	1533.47	28223	28027
31	1532.68	29199	29004
32	1531.90	30078	29883
Supervisory Channel (LDA4)	1510.0±4.00	13 Khz	

Notes:

1. 46Ax, 47Ax, 41Mx, 41HxA, and 41HxC use the following tone (Hz) frequencies:

   11914 (> 1 Gb/s) and 11719 (< 1 Gb.s) for Optical Channel 1,
   12402 (> 1 Gb/s) and 12207 (< 1 Gb.s) for Optical Channel 2,
   13574 (> 1 Gb/s) and 13379 (< 1 Gb.s) for Optical Channel 3, and
   14160 (> 1 Gb/s) and 13965 (< 1 Gb.s) for Optical Channel 4.

Optical Signal-to-Noise Ratio (OSNR)

The worst case minimum OSNR without a pump failure that Metropolis® EON system output can tolerate is 22dB.

□

Optical Power Specifications

Overview This section explains the actual values, ranges, and target values of optical power for each optical connection in a Metropolis® EON system.

Table 10-5 Optical Power Targets

Input/Output Point	Page Number Reference to Find Target
a. OTU Input (from client)	“OTU/OTPM Input” (10-10)
b. OTU Output (toward OMU)	“Add OT Output/OMU Input for 32-channel OAs” (10-12)
c. OMU Input	“Add OT Output/OMU Input for 32-channel OAs” (10-12)
d. OMU Output (toward OA)	“OMU Output/Transmit OA Input” (10-14)
e. OA Input (from OMU)	“OMU Output/Transmit OA Input” (10-14)
f. OA Output (toward destination NE)	“Transmit OA Output Power (Toward Destination NE)” (10-15)
g. OA Input (from source NE)	“Receive OA Input from Source NE” (10-17)
h. OA Output (toward ODU)	“Receive OA Output /ODU Input” (10-17)
i. ODU Input (from OA)	“Receive OA Output /ODU Input” (10-17)
j. ODU Output (toward OTU)	“OTU/OTPM Input” (10-10)
k. OTU Input (from ODU)	“OTU/OTPM Input” (10-10)
l. OTU Output (toward client)	“OTU Output Toward Client” (10-17)

OTU/OTPM Input

The following table provides the receive input power range for the add and drop OTU/OTPMs used in the Metropolis® EON.

Table 10-6 Add OTU/OTPM Input Power Range

Signal Rate	Circuit Pack Code	Receive Power Range (dBm)	
		min	max
OC-192/STM-64	41H(1-32)A	-14	-1
	41HB	-22	-11
	41H(1-32)C	-22	-11
OC-48/STM-16	41A(1-16)C, 41C(1-16)C	-27	-11
	41M(1-32) line side 46A(1-32)	-28.6	-10
	41BB	-27	-10
	46B	-28.6	-10
OC-12/STM-4	42A(1-16)B	-28	-11
	42B	-30.5	-8
OC-3/STM-1	43A(1-16)B	-33	-11
	43B	-34	-7
LSBB/ELSBB	44A(1-16)B/44C(1-16)	-28	-11
	44B/44BC	-30.5	-8
GbE	41F(1-16)	-27	-11
	41G	-27	-10
UBB	47A(1-32)	-25	-11
	47B	-28.6	-10

continued on next page

Signal Rate	Circuit Pack Code	Receive Power Range (dBm)	
		min	**max**
41Mx (2DM25)	41M(1-32)		
	Input Fiber Type		
	GbE 1310 nm SM	-20	-3
	GbE 850 nm MM	-17	0
	FICON 1310 nm SM	-25	-3
	FICON 850 nm MM	-13	1.3
	Fiber Channel 1310 nm SM	-25	-3
	Fiber Channel 850 nm MM	-13	1.3
	ESCON 1310 nm SM	-29	-14.5
	ESCON 1310 nm MM	-28	-3
	ISC-2 1310 nm SM	-20	-3
	ISC-2 1850 nm MM	-15	1.3

Important! When using LBOs on the input of add-side OTUs and OTPMs, select an optical LBO that can attenuate the input signal to a value that is between -12 and -22dB.

Easy Install for 32-channel OA/OMU Input Targets

With the new Release 8.2 Easy Install feature the LBO installed onto the OTU/OTPM at the factory has the power to meet the 5.5 dBm loss OMU input target for 32-channel OAs. A spare LBO with 2.5 dBm less attenuation is shipped with the OTU/OTPM so that a user with an 8 dBm loss OMU can replace the factory-installed LBO on the OTU with the spare. For 16-channel OAs the factory-installed LBO must be replaced with an LBO which matches the OMU input targets specified in Table 10-9, "OMU Input Targets for 16-channel OA".

Add OT Output/OMU Input for 32-channel OAs

If your system has a 32-channel OA, the power coming out of the add OTU/OTPM should match the OMU input targets shown in the following table. With the Release 8.2 Easy Install feature, a factory-installed LBO used on the OMU now provides the correct power to meet the OMU input target for 32-channel OAs and the LBOs no longer need to be changed when adding channels.

Table 10-7 OMU Input/OTU Output Targets for 32-channel OA

Signal Rate	OMUs 507B/508B Insertion Loss = 5.5 dB	OMUs 507A/508A Insertion Loss = 8 dB
<500 Mb/s	–21.5 dB	–19 dB
500 Mb/s - 1 Gb/s	–18.5 dB	–16 dB
1 Gb/s - 10 Gb/s	–15.5 dB	–13 dB

OTUs will ship equipped with an LBO that sets the output power to the level specified in the 507B column of the previous table. A spare LBO is shipped with every OTU to attenuate the output power by 2.5dB less. These spare LBOs will be used to adjust attenuation when using the higher loss (-8 dB) OMUs/ODUs as specified in the 507A/508A columns of the previous table.

Add OT Output/OMU Input for 16-channel OAs

If your system has a 16-channel OA, then the power coming out of the add OTU/OTPM should match the following table. Replace the LBO on the OTU/OTPM as necessary to meet the target specified in this table.

Table 10-8 OMU Input Targets for 16-channel OA

		16-Channel OA Nominal Add OTU/OTPM Output Power (±0.7 dBm) = Nominal OMU Input Power (±1.0 dBm)		
Channel	**Wavelength (nm)**	**OC-48/STM-16 and GbE**	**OC-12/STM-4 and LSBB/ELSBB**	**OC-3/STM-1**
1	1549.32	-4.0	-7.0	-10.0
2	1550.92	-5.3	-8.3	-11.3
3	1552.52	-6.5	-9.5	-12.5
4	1554.13	-7.2	-10.2	-13.2
5	1555.75	-7.7	-10.7	-13.7
6	1557.37	-8.2	-11.2	-14.2
7	1558.98	-8.0	-11.0	-14.0
8	1560.61	-6.5	-9.5	-12.5
9	1548.52	-2.0	-5.0	-8.0
10	1550.12	-4.6	-7.6	-10.6
11	1551.72	-5.8	-8.8	-11.8
12	1553.33	-6.8	-9.8	-12.8
13	1554.94	-7.4	-10.4	-13.4
14	1556.56	-7.9	-10.9	-13.9
15	1558.17	-8.1	-11.1	-14.1
16	1559.79	-7.2	-10.2	-13.2

OMU Output/Transmit OA Input

The following table lists target power levels into an OA from an OMU. For bit rates between 500 Mb/s and 1 Gb/s the target power is 3 dB less than the target power shown for each channel in the following table. For bit rates between 16 Mb/s and 500 Mb/s the target power is 6 dB less than the target power shown for each channel in the following table.

Table 10-9 OMU Output/Transmit OA Input Targets

Number of Channels (1-16)	1 Gb/s - 10 Gb/s Target Power (dBm)	Number of Channels (17-32)	1 Gb/s - 10 Gb/s Target Power (dBm)
1	-21.0	17	-8.7
2	-18.0	18	-8.4
3	-16.2	19	-8.2
4	-15.0	20	-8.0
5	-14.0	21	-7.8
6	-13.2	22	-7.6
7	-12.5	23	-7.4
8	-12.0	24	-7.2
9	-11.5	25	-7.0
10	-11.0	26	-6.9
11	-10.6	27	-6.7
12	-10.2	28	-6.5
13	-9.9	29	-6.4
14	-9.5	30	-6.2
15	-9.2	31	-6.1
16	-9.0	32	-5.9

Transmit OA Output Power (Toward Destination NE)

OA output power depends on the number of equipped input wavelengths, the channel rate of each wavelength, the number of spans, and the OA type; it is adjusted automatically by software whenever these variables change. Provided as a general guideline for OA power levels, the following table lists output power values in dB, assuming a 0 dB output lightguide build-out (LBO) and that the telemetry signal is present.

Table 10-10 Transmit OA Output Power (dBm)

No. of Optical Channels Equipped	LEA7B OA	LEA107B OA	LEA207 OA2 +1/-2.6	LEA307 OA3 +1/-2.6 (High Power)
0	11.9	11.9	-1.0	-1.0
1	12.4	12.4	3.1	5.2
2	12.4	12.4	5.2	7.6
3	13.8	13.8	6.6	9.2
4	14.5	14.5	7.7	10.4
5	15.2	15.2	8.5	11.3
6	15.8	15.8	9.2	12.0
7	16.0	16.0	9.8	12.6
8	16.5	16.5	10.4	13.2
9	16.5	17.0	10.8	13.7
10	16.5	17.5	11.3	14.1
11	16.5	17.9	11.7	14.5
12	16.5	18.3	12.0	14.9
13	16.5	18.6	12.3	15.2
14	16.5	18.9	12.7	15.6
15	16.5	19.0	12.9	15.9
16	16.5	19.0	13.2	16.1
17	N/A	N/A	13.5	16.4
18	N/A	N/A	13.7	16.6
19	N/A	N/A	13.9	16.9

No. of Optical Channels Equipped	LEA7B OA	LEA107B OA	LEA207 OA2 +1/-2.6	LEA307 OA3 +1/-2.6 (High Power)
20	N/A	N/A	14.1	17.1
21	N/A	N/A	14.4	17.3
22	N/A	N/A	14.5	17.5
23	N/A	N/A	14.7	17.7
24	N/A	N/A	14.9	17.9
25	N/A	N/A	15.1	18.0
26	N/A	N/A	15.3	18.2
27	N/A	N/A	15.4	18.4
28	N/A	N/A	15.6	18.5
29	N/A	N/A	15.7	18.7
30	N/A	N/A	15.9	18.8
31	N/A	N/A	16.0	19.0
32	N/A	N/A	16.1	19.1

Receive OA Input from Source NE

To calculate the input target for an OA from a source NE, find the appropriate OA output value in the previous table and subtract the incoming span loss:

- Receive OA Input from Source NE = Transmit OA Output minus Span Loss

Receive OA Output /ODU Input

To calculate the output target for an OA toward an ODU, use the following formula:

- Receive OA Input from Source NE = Transmit OA Output minus Span Loss

OTU Output Toward Client

The following table provides optical signal specifications for optical signal power in the 1.3µm range exiting the OTU.

Table 10-11 Optical Signal Specifications for 1.3µ OTU/OTPM

Bit Rate	Circuit Pack Code	Wavelength Range (nm)		Power Range (dBm)	
		min	max	min	max
OC-192, 10G	41HB	1530	1565	-3.0	-1.0
OC-48, 2.5G	41BB/46B	1280	1335	-2.0	+2.5
OC-12	42B	1280	1335	-2.5	+2.0
OC-3	43B	1280	1335	-7.0	0
LSBB/ELSBB	44B, 44BC	1280	1335	-2.5	+2.0
GbE	41G	1280	1335	-2.0	+2.5
UBB	47B	1280	1335	-2.0	+2.5

Environmental Specifications

Specification Standards

The following environmental specifications pertain to Metropolis® EON and OT:

- Earthquake and vibration, fire resistance, and airborne contaminant requirements meet GR-63-CORE Issue 1, October 1995 standards (Metropolis® EON meets Zone 4 requirements.)
- Electrostatic, electromagnetic, electrical grounding, and safety requirements meet GR-1089-CORE Issue 1, November 1994 standards
- Electromagnetic compatibility (EMC) requirements meet GR-1089-CORE
- EN 50082-1 - EMC Generic Immunity, Light Industrial Environment
- EN 60950 - Specifications for Safety of Information Technology Equipment
- EN 60825 - Safety of laser products
- UL® listed and CSA® certified
- AN/NZ 3548 (Australia and New Zealand EMI requirements)
- VCCI (Japan EMI requirements)
- FCC Part 15 (USA and Canadian)
- CE Mark Requirements (EN 300-38 for European Union)

Temperature/Humidity

The following table shows the various temperatures and humidity levels at which Metropolis® EON can operate.

Table 10-12 Operating Temperature/Humidity Values

Operating Condition	Temperature/Humidity
Normal Operating Temperature	5×C to 40×C (41×to 104×F)
Short-Term[1] Operating Temperature	-5×C to 50×C (23× to 122×F)
Normal Operating Humidity[2]	5% to 85%
Short-Term[1] Operating Humidity[2]	5% to 90%
Max. Operating Temperature Change Rate	1×C/min.(1.8× F/m)

Notes:

1. Short-term refers to a period of up to 96 consecutive hours and a total of 15 days in one year.
2. Non-condensing.

Handling and Transportation Constraints

The following table shows Metropolis® EON tolerance ranges for various handling and transportation conditions.

Table 10-13 Handling and Transportation Tolerance Ranges

Condition	Tolerance Range
Vibration & Shock	Complies with *GR-63-CORE, Issue 1, Oct. 1995*
Temperature (Transport/Storage)	- 40å×C to 70×C (40×F to 158×F)
Relative Humidity (Transport/Storage)	5% to 95%
Storage/Shipment (Altitude)	-200 ft to 40,000 ft (-61m to 12,133m)

Operations Interface Connectivity - EMS to NE

Metropolis® EON uses a message-based interface that supports Transaction Language 1 (TL1) to allow communications between the element management system (Navis™ Optical EMS) and the Network Element ring.

The following protocol conversion options are supported for the Metropolis® EON:

- TCP/IP
- OSI/LAN
- X.25

TCP/IP

Metropolis® EON supports Transmission Control Protocol/Internet Protocol (TCP/IP) over the LAN physical interface. Both TL1 and FTP may be used over TCP/IP. When using TCP/IP, the TL1 Translation Device (T-TD) enables TL1 messages to pass from the Navis™ Optical EMS and the Network Element ring.

OSI/LAN

Metropolis® EON also supports Open Systems Interconnection (OSI) LAN for allowing alarm/status conditions and performance-monitoring data to pass between the Navis™ Optical EMS and the Network Element ring, using the OSI 7-layer stack.

X.25

Metropolis® EON also supports an X.25 interface to allow communication between the Navis™ Optical EMS and the Network Element ring. The X.25 interface to the Metropolis® EON supports two permanent virtual circuits (PVCs) and up to six switched virtual circuits (SVCs). Every virtual circuit may be used to issue TL1 commands to the Metropolis® EON and obtain responses. Once communication is established, the Navis™ Optical EMS can send a TL1 command to any connected virtual circuit (VC) and can expect the Metropolis® EON to reply via the same VC.

Operations Interface Connectivity - NE to NE

Metropolis® EON network elements communicate among themselves through IAOLAN and the DCC.

IAOLAN

The IAOLAN interface, using IS-IS Level 2 routing, allows for robust communication between the Network Elements in a Metropolis® EON ring. Using IAOLAN, a single area of up to 50 nodes can be managed, and networks of more than 50 nodes can be managed by splitting the network into multiple linked areas.

DCC

Network Elements can also communicate through the Data Communications Channel (DCC).

Further Information

For further information on operations interfaces, refer to Chapter 2 of the *Metropolis®* Enhanced Optical Networking (EON), *Operations Systems Engineering Guide*.

.

□

Shelf Dimensions

The following table lists the physical dimensions of Metropolis® EON and OT components.

Table 10-14 Metropolis® EON/OT Physical Dimensions

Equipment	Height	Width	Depth
Metropolis® EON			
Shelf	28.5 in. (72.4 cm)	19.6 in. (50 cm)	11.0 in. (28.0 cm)
Shelf (Miscellaneously-mounted)[1]	31 in. (80 cm)	19.6 in. (50 cm)	11.0 in. (28.0 cm)
OT			
OT Shelf	17.7 in. (45.0 cm)	19.6 in. (50.0 cm)	11.0 in. (28.0 cm)
OT Shelf (Miscellaneously-mounted)	20.7 in. (52.5 cm)	19.6 in. (50.0 cm)	11.0 in. (28.0 cm)
Heat Baffle and Fan Tray			
Heat Baffle	2 in. (4.5 cm)	19.6 in. (50.0 cm)	11.0 in. (28.0 cm)
Fan Tray	3 in. (7 cm)	19.6 in. (50.0 cm)	11.0 in. (28.0 cm)
DCM Housing			
Carrier	4.3 in. (1100.0 cm)	19.3 in. (4913.0 cm)	9.6 in. (2450.0 cm)
Module	1.7 in. (450.0 cm)	9.6 in. (2450.0 cm)	9.4 in. (2400.0 cm)

Notes:

1. The color of miscellaneously-mounted shelves is central office white. The color of cable racks, and lower door frame is office soft blue.

Circuit Pack Dimensions

The following table lists the dimensions of Metropolis® EON and OTU circuit packs.

Table 10-15 Metropolis® EON/OTU Circuit Pack Dimensions

Equipment	Height	Width	Depth
Metropolis® EON			
SYSCTL	14 in. (35.6 cm)	1.2 in. (3.0 cm)	8 in. (20.0 cm)
SYSMEM	14 in. (35.6 cm)	0.8 in. (2.0 cm)	8 in. (20.0 cm)
OA (All)	14 in. (35.6 cm)	4 in. (10.0 cm)	8 in. (20.0 cm)
LITX, LIRCV, LIHTR	14 in. (35.6 cm)	4 in. (10.0 cm)	8 in. (20.0 cm)
TOHCTL (LEA102)	14 in. (35.6 cm)	0.8 in. (2.0 cm)	8 in. (20.0 cm)
IAOLRP	9 in. (22.8 cm)	2 in. (5.0 cm)	8 in. (20.0 cm)
OMU (All) and ODU (All)	9 in. (22.8 cm)	2 in. (5.0 cm)	6 in. (15.0 cm)
TLM (All)	9 in. (22.8 cm)	2 in. (5.0 cm)	8 in. (20.0 cm)
OTU			
OTCTL	13.2 in. (33.6 cm)	4.8 in. (12 cm)	9.3 in. (23.6 cm)
OUPSR	13.2 in. (33.6 cm)	1.6 in. (4.0 cm)	9.3 in. (23.6 cm)
OTUs (All)	13.2 in. (33.6 cm)	1.6 in. (4.0 cm)	9.3 in. (23.6 cm)
QOTU, 41S QOTU25, 41T QOTUUB, 41U	13.2 in. (33.6 cm)	1.6 in. (4.0 cm)	9.3 in. (23.6 cm)
OTPMs (All)	15.3 in. (13.5 cm)	1.2 in. (3.0 cm)	8.1 in. (20.6 cm)
OTPM25s (All)	15.3 in. (13.5 cm)	1.2 in. (3.0 cm)	8.1 in. (20.6 cm)

Floor Loading Specifications

The following table[1] shows floor loads for Metropolis® EON and OT.

Table 10-16 Metropolis® EON/OT Floor Loads

Configuration	End Terminal		Repeater	
	Weight (lbs)	Weight per sq. ft.	Weight	Weight per sq. ft.
Metropolis® EON				
Miscellaneously-mounted Shelf	95		90	
Integrated Bay	373	49.1		
OT				
Fully-equipped Miscellaneously mounted System Controller Shelf	64			
Fully-equipped Miscellaneously mounted Complementary Shelf	74			

Notes:

1. Miscellaneously-mounted shelves do not have an absolute weight per square foot. Because they can be installed in different equipment arrangements, their weight per square foot is subject to change.

Glossary

Lucent Technologies
Bell Labs Innovations

100Base-FX (also called FX, Fast Ethernet)
An Ethernet protocol with a signal rate of 125 Mb/s.

1000Base-LX (also called GbE-1, Gigabit Ethernet)
An Ethernet protocol with a signal rate of 1.25 Gb/s.

0x1 Line Operation
An unprotected operation. The connection between network elements has one bidirectional line (no protection line).

1+1 Line Protection
A protection architecture in which the transmitting equipment transmits a valid signal on both the working and protection lines. The receiving equipment monitors both lines. Based on performance criteria and OS control, the receiving equipment chooses one line as the active line and designates the other as the standby line.

1xN Equipment Protection
1xN protection pertains to N number of circuit pack/port units protected by one circuit pack or port unit. When a protection switch occurs, the working signals are routed from the failed pack to the protection pack. When the fault clears, the signals revert to the working port unit.

12NC (12-digit Numerical Code)
Used to uniquely identify an item or product. The first ten digits uniquely identify an item. The eleventh digit is used to specify the particular variant of an item. The twelfth digit is used for the revision issue. Items with the first eleven digits the same, are functionally equal and may be exchanged.

A

ABN
Abnormal alarm status

ABS (Absent)
Used to indicate that a given circuit pack is not installed.

AC
Alternating Current

ACO (Alarm Cut-Off)
A button on the user panel used to silence audible alarms.

ACT (Active)
Used to indicate that a circuit pack or module is in-service and currently providing service functions.

ADM (Add/Drop Multiplexer)
The term for a synchronous network element capable of combining signals of different rates and having those signals added to or dropped from the stream.

AEL
Accessible Emission Limits

Agent
Performs operations on managed objects and issues events on behalf of these managed objects. All SDH managed objects will support at least an agent. Control of distant agents is possible via local “Managers”.

AGNE
Alarm Gateway Network Element

AID (Access Identifier)
A technical specification for explicitly naming entities (both physical and logical) of an NE using a grammar comprised of ASCII text, keywords, and grammar rules.

AIS (Alarm Indication Signal)
A code transmitted downstream in a digital network that indicates that an upstream failure has been detected and alarmed if the upstream alarm has not been suppressed.

AITS
Acknowledged Information Transfer Service: Confirmed mode of operation of the LAPD protocol.

Alarm
Visible or audible signal indicating that an equipment failure or significant event/ condition has occurred.

Alarm Correlation
The search for a directly-reported alarm that can account for a given symptomatic condition.

Alarm Severity
An attribute defining the priority of the alarm message. The way alarms are processed depends on the severity.

Alarm Suppression
Selective removal of alarm messages from being forwarded to the GUI or to network management layer OSs.

Alarm Throttling
A feature that automatically or manually suppresses autonomous messages that are not priority alarms.

Aligning
Indicating the head of a virtual container by means of a pointer, for example, creating an Administrative Unit (AU) or a Tributary Unit (TU).

AMI (Alternate Mark Inversion)
A line code that employs a ternary signal to convert binary digits, in which successive binary ones are represented by signal elements that are normally of alternative positive and negative polarity but equal in amplitude and in which binary zeros are represented by signal elements that have zero amplitude.

Anomaly
A difference between the actual and desired operation of a function.

ANSI
American National Standards Institute

APD
Avalanche Photo Diode

APS (Automatic Protection Switch)
A protection switch that occurs automatically in response to an automatically detected fault condition.

ASCII (American Standard Code for Information Interchange)
A standard 7-bit code that represents letters, numbers, punctuation marks, and special characters in the interchange of data among computing and communications equipment.

ASN.1
Abstract Syntax Notation 1

Assembly
Gathering together of payload data with overhead and pointer information (an indication of the direction of the signal).

Association
A logical connection between manager and agent through which management information can be exchanged.

Asynchronous
The essential characteristic of time-scales or signals such that their corresponding significant instants do not necessarily occur at the same average rate.

ATM (Asynchronous Transfer Mode)
A high-speed transmission technology characterized by high bandwidth and low delay. It utilizes a packet switching and multiplexing technique which allocates bandwidth on demand.

Attribute
Alarm indication level: critical, major, minor, or no alarm.

AU (Administrative Unit)
Carrier for TUs.

AUG
Administrative Unit Group

AU PTR (Administrative Unit Pointer)
Indicates the phase alignment of the VC-N with respect to the STM-N frame. The pointer position is fixed with respect to the STM-N frame.

AUTO (Automatic)
One possible state of a port or slot. When a port is in the AUTO state and a good signal is detected, the port automatically enters the IS (in-service) state. When a slot is in the AUTO state and a circuit pack is detected, the slot automatically enters the EQ (equipped) state.

Autolock
Action taken by the system in the event of circuit pack failure/trouble. System switches to protection and prevents a return to the working circuit pack even if the trouble clears. Multiple protection switches on a circuit pack during a short period of time cause the system to autolock the pack.

Autonomous Message
A message transmitted from the controlled network element to the Navis™ Optical EMS which was not a response to a Navis™ Optical EMS originated command.

AVAIL
Available

B

Bandwidth
The difference in Hz between the highest and lowest frequencies in a transmission channel. The data rate that can be carried by a given communications circuit.

Baud Rate
Transmission rate of data (bits per second) on a network link.

BCLAN (Board Controller Local Area Network)
The internal local area network that provides communications between the line controller circuit pack and board controllers on the circuit packs associated with a high-speed line.

BER (Bit Error Rate)
The ratio of error bits received to the total number of bits transmitted.

Bidirectional Line
A transmission path consisting of two fibers that handle traffic in both the transmit and receive directions.

Bidirectional Ring
A ring in which both directions of traffic between any two nodes travel through the same network elements (although in opposite directions).

Bidirectional Switch
Protection switching performed in both the transmit and receive directions.

BIP-N (Bit Interleaved Parity-N)
A method of error monitoring over a specified number of bits (BIP-3 or BIP-8).

Bit
The smallest unit of information in a computer, with a value of either 0 or 1.

Bit Error Rate Threshold
The point at which an alarm is issued for bit errors.

BLD OUT LG
Build-Out Lightguide

BLSR (Bidirectional Line Switched Ring)
A method of SONET transport in which half of the working network is sent counter-clockwise over one fiber and the other half is sent clockwise over another fiber. BLSR offers bandwidth use advantages for distributed traffic in single-ring architectures.

Bridge Cross-Connection
The setting up of a cross-connection leg with the same input tributary as that of an existing cross-connection leg. Thus, forming a 1:2 bridge from an input tributary to two output tributaries.

Broadband Communications
Voice, data, and/or video communications at greater than 2 Mb/s rates.

Broadband Service Transport
STM-1 concatenation transport over the for ATM applications.

Byte
Refers to a group of eight consecutive binary digits.

C

C
Container

CC (Clear Channel)
A digital circuit where no framing or control bits are required, thus making the full bandwidth available for communications.

CC (Cross-Connection)
Path-level connections between input and output tributaries or specific ports within a single NE. Cross-connections are made in a consistent way even though there are various types of ports and various types of port protection. Cross-Connections are reconfigurable interconnections between tributaries of transmission interfaces.

Cell Relay
Fixed length cells. For example, ATM with 53 octets.

CenterLink
A user-friendly, menu-driven web-based browser interface that can be used with the Metropolis™ EON. CenterLink software runs on a Microsoft *Windows95*™,

Windows98™, *Windows2000*™, *Windows2000*™, *WindowsNT*™ compatible personal computer (PC).

CEPT
Conférence Européenne des Administrations des Postes et des Télécommunications

Channel
A sub-unit of transmission capacity within a defined higher level of transmission capacity.

Circuit
A set of transmission channels through one or more network elements that provides transmission of signals between two points, to support a single communications path.

CIT or CenterLink (Customer Interface Terminal)
The user interface terminal used by craft personnel to communicate with a network element.

CL
Clear

CLEC (Competitive - or Certified - Local Exchange Carrier)
A term coined for the deregulated, competitive telecommunications environment envisioned by the Telecommunications Act of 1996 (see ELEC).

CLEI
Common Language Equipment Identifier

CLF
Channel Loading Factor

Client
Computer in a computer network that generally offers a user interface to a server.

CLLI
Common Language Location Identifier

CLO (Control Link Oscillator)
An IBM® mainframe protocol with a signal rate of 16 Mb/s.

Closed Ring Network
A network formed of a ring-shaped configuration of network elements. Each network element connects to two others, one on each side.

CM (Configuration Management)
A subsystem that configures the network and processes messages from the network.

CM (Customer Maintenance)
An optical signal

CMI
Coded Mark Inversion

CMIP
Common Management Information Protocol. OSI standard protocol for OAM&P information exchange.

CMISE
Common Management Information Service Element

CO (Central Office)
A building where common carriers terminate customer circuits.

Collocated
System elements that are located in the same location.

Command Group
An administrator-defined group that defines commands to which a user has access.

Concatenation
A procedure whereby multiple virtual containers are associated one with each other resulting in a combined capacity that can be used as a single container across which bit sequence integrity is maintained.

Co-Resident
A hardware configuration where two applications can be active at the same time independently on the same hardware and software platform without interfering with each others functioning.

Correlation
A process where related hard failure alarms are identified.

CP
Circuit Pack

CPE
Customer Premises Equipment

CR (Critical)
An alarm that indicates a severe, service-affecting condition.

CRC
Cyclical Redundancy Check

Cross-Connect Map
Connection map for an SDH Network Element; contains information about how signals are connected between high speed time slots and low speed tributaries.

Crosstalk
An unwanted signal introduced into one transmission line from another.

CSMA/CD
Carrier Sense Multiple Access with Collision Detection

CTS
Customer Technical Support within Lucent Technologies

Current Value
The value currently assigned to a provisionable parameter.

Customer Maintenance Signal
A 155-Mb/s optical signal originating from customer supplied equipment and used for customer maintenance activities. It is carried as part of the supervisory signal.

D

D1 Video
A video protocol with a signal rate of 270 Mb/s.

DACS/DCS
Digital Access Cross-Connect System

Data
A collection of system parameters and their associated values.

Database Administrator
A user who administers the database of the application.

dB
Decibels

DC
Direct Current

DCC (Data Communications Channel)
The embedded overhead communications channel in the synchronous line, used for end-to-end communications and maintenance. The DCC carries alarm, control, and status information between network elements in a synchronous network.

DCE (Data Communications Equipment)
The equipment that provides signal conversion and coding between the data terminating equipment (DTE) and the line. The DCE may be separate equipment or an integral part of the DTE or of intermediate equipment. A DCE may perform other functions usually performed at the network end of the line.

DCF
Data Communications Function

DCM (Dispersion Compensation Module)
A module that is fibered to an OA to compensate for dispersion of 10G signals over long distances.

DCN
Data Communications Network

Default
An operation or value that the system or application assumes, unless a user makes an explicit choice.

Default Provisioning
The parameter values that are preprogrammed as shipped from the factory.

Defect
A limited interruption of the ability of an item to perform a required function. It may or may not lead to maintenance action depending on the results of additional analysis.

DEMUX (Demultiplexer)
A device that splits a combined signal into individual signals at the receiver end of transmission.

Demultiplexing
A process applied to a multiplexed signal for recovering signals combined within it and for restoring the distinct individual channels of these signals.

Deprovisioning
The inverse order of provisioning. To manually remove/delete a parameter that has (or parameters that have) previously been provisioned.

Digital Link
A transmission span such as a point-to-point 2 Mb/s, 34 Mb/s, 140 Mb/s, VC12, VC3 or VC4 link between controlled network elements. The channels within a digital link are insignificant.

Digital Multiplexer
Equipment that combines by time-division multiplexing several digital signals into a single composite digital signal.

Digital Section
A transmission span such as an STM-N signal. A digital section may contain multiple digital channels.

Disassembly
Splitting up a signal into its constituents as payload data and overhead (an indication of the direction of a signal).

Dispersion
Time-broadening of a transmitted light pulse.

Dispersion Shifted Optical Fiber
1330/1550 nm minimum dispersion wavelength.

Divergence
When there is unequal amplification of incoming wavelengths, the result is a power divergence between wavelengths.

DMA
Direct Memory Access

DNI (Dual Node Ring Interworking)
A topology in which two rings are interconnected at two nodes on each ring and operate so that inter-ring traffic is not lost in the event of a node or link failure at an interconnecting point.

Doping
The addition of impurities to a substance in order to attain desired properties.

Downstream
At or towards the destination of the considered transmission stream, for example, looking in the same direction of transmission.

DPLL
Digital Phase Locked Loop

DRAM
Dynamic Random Access Memory

Drop and Continue
A circuit configuration that provides redundant signal appearances at the outputs of two network elements in a ring. Can be used for Dual Node Ring Interworking (DNI) and for video distribution applications.

Drop-Down Menu
A menu that is displayed from a menu bar.

Drop Side Signal
An optical signal suitable for transmission over Metropolis™ EON.

DS3
Digital Signal Level 3 (44.736 Mb/s)

DSNE (Directory Service Network Element)
A designated network element that is responsible for administering a database that maps network element names (TIDs) to NSAP addresses. There must be one and only one DSNE per subnetwork.

DTE (Data Terminating Equipment)
The equipment that originates data for transmission and accepts transmitted data.

DTMF
Dual Tone Multifrequency

Dual
An end terminal configuration that supports east-west transmission.

DUS
Do not Use for Synchronization

DV6000
A video protocol with a signal rate of 2.38 Gb/s.

DWDM (Dense Wavelength Division Multiplexing)
Transmitting two or more signals of different wavelengths simultaneously over a single fiber.

E

EBER (Excessive Bit Error Rate)
The calculated average bit error rate over a data stream.

EC-1 (Electrical Carrier level-1 signal)
An STS-1 signal that has been shaped and encoded for transmission over electrical media.

ECC
Embedded Control Channel

EEPROM
Electrically Erasable Programmable Read-Only Memory

EIA (Electronic Industries Association)
A trade association of the electronic industry that establishes electrical and functional standards.

ELSBB (Enhanced Low-Speed Broadband)
This usually refers to the ELSBB circuit pack, which can transmit and receive signals with various protocols and with speeds between 16 Mb/s and 1.06 Gb/s.

EMC (Electromagnetic Compatibility)
A measure of equipment tolerance to external electromagnetic fields.

EMDU (External Miscellaneous Discrete Unit)
Connected to the serial telemetry interface of to provide an additional set of miscellaneous discrete input and output points.

EMI (Electromagnetic Interference)
High-energy, electrically induced magnetic fields that cause data corruption in cables passing through the fields.

EMS
Element Management System

EMS
Element Management System

End Terminal
Metropolis™ EON equipment that terminates optical line signals. It consists of a collocated optical multiplexer unit (OMU) and optical demultiplexer unit (ODU) for bidirectional transmission, optical amplifiers (OA), and telemetry packs.

Entity Identifier
The name used by the system to refer to a circuit pack, memory device, or communications link.

EPROM
Erasable Programmable Read-Only Memory

EQ (Equipped)
Status of a circuit pack or interface module that is in the system database and physically in the frame, but not yet provisioned.

ES (Errored Seconds)
A performance monitoring parameter. ES “type A” is a second with exactly one error; ES “type B” is a second with more than one and less than the number of errors in a severely errored second for the given signal. ES by itself means the sum of the type A and type B ESs.

ESCON® (Enterprise System Connection)
An IBM® mainframe protocol with a signal rate of 200 Mb/s.

ESD
Electrostatic Discharge

ESP
Electrostatic Protection

ETR (External Timing Request)
An IBM® mainframe protocol with a signal rate of 16 Mb/s.

ETSI
European Telecommunications Standards Institute

Event
A significant change. Events in controlled Network Elements include signal failures, equipment failures, signals exceeding thresholds, and protection switch activity. When an event occurs in a controlled Network Element, the controlled

Network Element will generate an alarm or status message and send it to the management system.

Event Driven
A required characteristic of network element software system: NEs are reactive systems, primarily viewed as systems that wait for and then handle events. Events are provided by the external interface packages, the hardware resource packages, and also by the software itself.

Externally Timed
An operating condition of a clock in which it is locked to an external reference and is using time constants that are altered to quickly bring the local oscillator's frequency into approximate agreement with the synchronization reference frequency.

Extra traffic
Unprotected traffic that is carried over protection channels when their capacity is not used for the protection of working traffic.

F

Fault
Term used when a circuit pack has a hard (not temporary) fault and cannot perform its normal function.

Fault Management
Collecting, processing, and forwarding of autonomous messages from network elements.

FC-12
A fibre channel with a signal rate of 133 Mb/s.

FC-25
A fibre channel with a signal rate of 266 Mb/s.

FC-50
A fibre channel with a signal rate of 531 Mb/s.

FC-100
A fibre channel with a signal rate of 1.062 Gb/s.

FCC
Federal Communications Commission

FDA/CDRH
The Food and Drug Administration`s Center for Devices and Radiological Health.

FDDI (Fiber Distributed Data Interface)
A fiber interface (having a signal rate of 125 Mb/s) that connects computers and distributes data among them.

FE (Far End)
Any other network element in a maintenance subnetwork other than the one the user is at or working on. Also called remote.

FE ACTY
Far-End Activity.

FEBE (Far-End Block Error)
An indication returned to the transmitting node that an errored block has been detected at the receiving node. A block is a specified grouping of bits.

FEPROM (Flash EPROM)
A technology that combines the nonvolatility of EPROM with the in-circuit reprogrammability of EEPROM (electrically-erasable PROM).

FERF (Far-End Receive Failure)
An indication returned to a transmitting Network Element that the receiving Network Element has detected an incoming section failure. Also known as RDI.

FICON™ (Fiber Connection)
An IBM® mainframe protocol with a signal rate of 1.062 Gb/s.

FIT (Failures in Time)
Circuit pack failure rates per 10^9 hours as calculated using the method described in Reliability Prediction Procedure for Electronic Equipment, BellCore Method I, Issue 5, September 1995.

Folded Rings
Folded (collapsed) rings are rings without fiber diversity. The terminology derives from the image of folding a ring into a linear segment.

Forced
Term used when a circuit pack (either working or protection) has been locked into a service-providing state by user command.

FR (Frame Relay)
A form of packet switching that relies on high-quality phone lines to minimize errors. It is very good at handling high-speed, bursty data over wide area networks. The frames are variable lengths and error checking is done at the end points.

Frame
The smallest block of digital data being transmitted.

Framework
An assembly of equipment units capable of housing shelves, such as a bay framework.

Free Running
An operating condition of a clock in which its local oscillator is not locked to an internal synchronization reference and is using no storage techniques to sustain its accuracy.

G

GB
Gigabytes

Gbit/s
Gigabits per second

GHz
Gigahertz

Global Wait to Restore Time
Corresponds to the time to wait before switching back to the timing reference. It occurs after a timing link failure has cleared. This time applies for all timing sources in a system hence the name global. This can be between 0 and 60 minutes, in increments of one minute.

GNE (Gateway Network Element)
A network element that passes information between other network elements and management systems through a data communication network.

H

Hard Failure
An unrecoverable nonsymptomatic (primary) failure that causes signal impairment or interferes with critical network functions, such as DCC operation.

Hazard Level
Output power level of a Metropolis™ EON system or device that poses safety risks to personnel. For 1550-nm wavelengths, hazard levels are defined as follows: Level 1 ≤ 10 dBm.

HDB3 (High Density Bipolar 3 Code)
Line code for 2 Mb/s transmission systems.

HDLC (High Level Data Link Control)
OSI reference model datalink layer protocol.

HMI
Human Machine Interface

HML (Human Machine Language)
A standard language developed by the ITU for describing the interaction between humans and dumb terminals.

HO
High Order

Holdover
An operating condition of a clock in which its local oscillator is not locked to an external reference but is using storage techniques to maintain its accuracy with respect to the last known frequency comparison with a synchronization reference.

Hot Standby
A circuit pack ready for fast, automatic placement into operation to replace an active circuit pack. It has the same signal as the service going through it, so that choice is all that is required.

HPA (Higher Order Path Adaptation)
Function that adapts a lower order Virtual Container to a higher order Virtual Container by processing the Tributary Unit pointer which indicates the phase of the lower order Virtual Container Path Overhead relative to the higher order Virtual Container Path Overhead and assembling/disassembling the complete higher order Virtual Container.

HPC (Higher Order Path Connection)
Function that provides for flexible assignment of higher order Virtual Containers within an STM-N signal.

HPT (Higher Order Path Termination)
Function that terminates a higher order path by generating and adding the appropriate Virtual Container Path Overhead to the relevant container at the path source and removing the Virtual Container Path Overhead and reading it at the path sink.

HS
High Speed

HW
Hardware

Hz (Hertz)
A unit of frequency equal to one cycle per second.

I

IAO LAN
Intraoffice Local Area Network

IAOLRP
Intraoffice Line Relay Pack

ID
Identifier

IEC
International Electro-Technical Commission

IEEE
Institute of Electrical and Electronics Engineers

ILEC (Incumbent Local Exchange Carrier)
The dominant phone carrier within a geographic area as determined by the FCC (see CLEC).

I/O
Input/Output

IMF
Infant Mortality Factor

Insert
To physically insert a circuit pack into a slot, thus causing a system initiated restoral of an entity into service and/or creation of an entity and associated attributes.

Interface Capacity
The total number of STM-1 equivalents (bidirectional) tributaries in all transmission interfaces with which a given transmission interface shelf can be equipped at one time. The interface capacity varies with equipage.

Intermediate System (IS)
A system which routes/relays management information. An SDH Network Element may be a combined intermediate and end system.

IPC
Inter Processor Communications

IR
Intermediate Reach

IS (In-Service)
A memory administrative state for ports. IS refers to a port that is fully monitored and alarmed.

ISC (Inter-System Channel)
An IBM® mainframe protocol with a signal rate of 1.062 Gb/s.

ISC-2
An IBM® mainframe protocol (a newer version of ISC) with a signal rate of 1.062 Gb/s.

ISC-3 at Peer Mode
An IBM® mainframe protocol with a signal rate of 2.13 Gb/s.

ISDN
Integrated Services Digital Network

IS-IS Routing
The Network Elements in a management network, route packets (data) between each other using an IS-IS level protocol. The size of a network running IS-IS Level

1 is limited, and therefore certain mechanisms are employed to facilitate the management of larger networks.

For STATIC ROUTING, the capability exists for disabling the protocol over the LAN connections, effectively causing the management network to be partitioned into separate IS-IS Level 1 areas. In order for the network management system to communicate with a specific Network Element in one of these areas, the network management system must identify through which so-called Gateway Network Element this specific Network Element is connected to the LAN. All packets to this specific Network Element are routed directly to the Gateway Network Element by the network management system, before being re-routed (if necessary) within the Level 1 area.

For DYNAMIC ROUTING an IS-IS Level 2 routing protocol is used allowing a number of Level 1 areas to interwork. The Network Elements which connect an IS-IS area to another area are set to run the IS-IS Level 2 protocol within the Network Element and on the connection between other Network Elements. Packets can now be routed between IS-IS areas and the network management system does not have to identify the Gateway Network Elements.

ITM
Integrated Transport Management

ITM-NM
Integrated Transport Management Network Module

ITU
International Telecommunications Union

ITU-T
International Telecommunications Union — Telecommunication standardization sector. Formerly known as CCITT: Comité Consultatif International Télégrafique & Téléphonique; International Telegraph and Telephone Consultative Committee.

J

Jitter
Short term variations of amplitude and frequency components of a digital signal from their ideal position in time.

K

Kbit/s
Kilobits per second

L

LAN (Local Area Network)
A communications network that covers a limited geographic area, is privately owned and user administered, is mostly used for internal transfer of information within a business, is normally contained within a single building or adjacent group of buildings, and transmits data at a very rapid speed.

LBC
Laser Bias Current

LBFC
Laser Backface Currents

LBO (Lightguide Build-Out)
An attenuating (signal-reducing) element used to keep an optical output signal strength within desired limits.

LCN
Local Communications Network

LED
Light-Emitting Diode

LGX
Lightguide cross-connect panel

LH
Long Haul

Line
A transmission medium, together with the associated equipment, required to provide the means of transporting information between two consecutive network elements. One network element originates the line signal; the other terminates it.

Line Protection
The optical interfaces can be protected by line protection. Line protection switching protects against failures of line facilities, including the interfaces at both ends of a line, the optical fibers, and any equipment between the two ends. Line protection includes protection of equipment failures.

Line Timing
Refers to a network element that derives its timing from an incoming STM-N signal.

Link
The mapping between in-ports and out-ports. It specifies how components are connected to one another.

LO
Low Order

Location
An identifier for a specific circuit pack, interface module, interface port, or communications link.

Lockout State
The Lockout State shall be defined for each working or protection circuit pack. The two permitted states are: None – meaning no lockout is set for the circuit pack, set meaning the circuit pack has been locked out. The values (None & Set) shall be taken independently for each working or protection circuit pack.

LOF (Loss of Frame)
A failure to synchronize to an incoming signal.

LOM
Loss Of Multiframe

Loopback
Type of diagnostic test used to compare an original transmitted signal with the resulting received signal. A loopback is established when the received optical or electrical external transmission signal is sent from a port or tributary input directly back toward the output.

Loop Timing
A special case of line timing. It applies to network elements that have only one OC-N/STM-N interface. For example, terminating nodes in a linear network are loop timed.

LOP (Loss of Pointer)
A failure to extract good data from a signal payload.

LOS (Loss of Signal)
The complete absence of an incoming signal.

Loss Budget
Loss (in dB) of optical power due to the span transmission medium (includes fiber loss and splice losses).

LIRCV
Line Interface Receive circuit pack

LPA (Lower order Path Adaptation)
Function that adapts a PDH signal to a synchronous network by mapping the signal into or de-mapping the signal out of a synchronous container.

LPC (Lower Order Path Connection)
Function that provides for flexible assignment of lower order VCs in a higher order VC.

LPT (Lower Order Path Termination)
Function that terminates a lower order path by generating and adding the appropriate VC POH to the relevant container at the path source and removing the VC POH and reading it at the path sink.

LS
Low Speed

LSBB
Low-speed broadband. This usually refers to the LSBB circuit pack, which can transmit and receive signals with various protocols and with speeds between 16 and 750 Mb/s.

LTE
Line Terminating Equipment

LWS
Lucent Worldwide Services

M

µ
Microns

µm
Micrometer

MAF
Management Application Function

Maintenance Condition
An equipment state in which some normal service functions are suspended, either because of a problem or to perform special functions (copy memory) that can not be performed while normal service is being provided.

Management Connection
Identifies the type of routing used (STATIC or DYNAMIC); selecting STATIC allows the gateway network element to be identified.

Manager
Capable of issuing network management operations and receiving events. The manager communicates with the agent in the controlled network element.

Manual Switch State
A protection group shall enter the Manual Switch State upon the initiation and successful completion of the Manual Switch command. The protection group leaves the Manual Switch state by means of the Clear or Forced Switch commands. While in the Manual Switch state the system may switch the active unit automatically if required for protection switching.

Mapping
The logical association of one set of values, such as addresses on one network, with quantities or values of another set, such as devices or addresses on another network.

MB
Megabytes

Mbit/s
Megabits per second

MCF (Message Communications Function)
Function that provides facilities for the transport and routing of Telecommunications Management Network messages to and from the Network Manager.

MD (Mediation Device)
Allows for exchange of management information between Operations System and Network Elements.

MDI
Miscellaneous Discrete Input

MDO
Miscellaneous Discrete Output

MEC (Manufacturer Executable Code)
Network Element system software in binary format that after being downloaded to one of the stores can be executed by the system controller of the network element.

MEM
Memory

Mid-Span Meet
The capability to interface between two lightwave network elements of different vendors. This applies to high-speed optical interfaces.

MIPS
Millions of Instructions Per Second

Miscellaneous Discrete Interface
Allows an operations system to control and monitor equipment collocated within a set of input and output contact closures.

MJ (Major (alarm)
Indicates a service-affecting failure, main or unit controller failure, or power supply failure.

MMI
Man-Machine Interface

MML
Human-Machine Language

MN (Minor alarm)
Indicates a non-service-affecting failure of equipment or facility.

MO
Managed Object

MS
Multiplexer Section

ms
Millisecond

MSOH (Multiplexer Section OverHead)
Part of the Section Overhead. Is accessible only at line terminals and multiplexers.

MSP (Multiplexer Section Protection)
Provides capability for switching a signal from a working to a protection section.

MS-SPRING (Multiplexer Section Shared Protection Ring)
A protection method used in Add-Drop Multiplexer Network Elements.

MST (Multiplexer Section Termination)
Function that generates the Multiplexer Section OverHead in the transmit direction and terminates the part of the Multiplexer Section overhead that is acceptable in the receive direction.

MTBF
Mean Time Between Failures

MTBMA
Mean Time Between Maintenance Activities

MTIE
Maximum Time Interval Error

MTPI
Multiplexer Timing Physical Interface

MTS (Multiplexer Timing Source)
Function that provides timing reference to the relevant component parts of the multiplex equipment and represents the SDH Network Element clock.

MTTR
Mean Time To Repair

Multiplexer
A device (circuit pack) that combines two or more transmission signals into a combined signal on a shared medium.

Multiplexing
A procedure by which multiple lower order path layer signals are adapted into a higher order path, or the multiple higher order path layer signals are adapted into a multiplex section.

N

NA
Not Applicable

NE (Network Element)
A node in a telecommunication network that supports network transport services and is directly manageable by a management system.

NE ACTY
Near-End Activity

NMA
Network Monitoring and Analysis System

NEBS
Network Equipment-Building System

nm
Nanometer (10^{-9} meters)

NMON (Not Monitored)
A provisioning state for equipment that is not monitored or alarmed.

NMS
Network Management System

Node
A network element in a ring or, more generally, in any type of network. In a network element supporting interfaces to more than one ring, node refers to an interface that is in a particular ring. Node is also defined as all equipment that is controlled by one system controller. A node is not always directly manageable by a management system.

Non-Revertive Switching
In non-revertive switching, an active and stand-by line exist on the network. When a protection switch occurs, the standby line is selected to support traffic, thereby becoming the active line. The original active line then becomes the stand-by line. This status remains in effect even when the fault clears. That is, there is no automatic switch back to the original status.

Non-Synchronous
The essential characteristic of time-scales or signals such that their corresponding significant instants do not necessarily occur at the same average rate.

No Request State
This is the routine-operation quiet state in which no external command activities are occurring.

NORM
Normal

NPI
Null Pointer Indication

NPPA (Non-Preemptible Protection Access)
Non-preemptible protection access increases the available span capacity for traffic which does not require protection by a ring, but which cannot be preempted.

NRZ
Nonreturn to Zero

NSA
Non-Service Affecting

NSAP Address (Network Service Access Point Address)
Used in the OSI network layer 3). An automatically assigned number that uniquely identifies a Network Element for the purposes of routing DCC messages.

NVM (Non-Volatile Memory)
Memory that retains its stored data after power has been removed. An example of NVM would be a hard disk.

O

O&M
Operation and Maintenance

OA (Optical Amplifier)
A device that amplifies an optical signal without converting the signal from optical to electrical, then back again to optical energy.

OADM Office (Optical Add/Drop Multiplex Office)
A dual terminal shelf or two colocated end terminal shelves with pass-through wavelengths.

OALAN (Overhead Access Local Area Network)
The internal local area network that provides communications between the system controller circuit pack and the overhead controller circuit pack.

OAM&P
Operations, Administration, Maintenance, and Provisioning

OC, OC-n
Optical Carrier

OC-3
Optical Carrier, Level 3 Signal (155 Mbit/s)

OC-12
Optical Carrier, Level 12 Signal (622.08 Mbit/s)

OC-48
Optical Carrier, Level 48 (2488.32 Mb/s) (2.5 Gbit/s)

OC-192
Optical Carrier, Level 192 (9953.28 Mb/s) (10 Gbit/s)

OCh10G
An optical channel for overhead in a DWDM system - signal rate is 10.664 Gb/s.

OCHAN
Optical Channel

ODU (Optical Demultiplexer Unit)
A type of circuit pack that demultiplexes the input optical signal into a maximum of 16 wavelengths.

OI (Operations Interworking)
The capability to access, operate, provision, and administer remote systems through craft interface access from any site in a SDH network or from a centralized operations system.

OLINE
Optical Line

OMU (Optical Multiplexer Unit)
A type of circuit pack that combines up to 16 optical wavelengths into one signal called the optical line signal.

OOF
Out-of-Frame

OOS (Out-of-Service)
The circuit pack is not providing its normal service function (removed from either the working or protection state) either because of a system problem or because the pack has been removed from service.

Open Ring Network
A network formed of a linear chain-shaped configuration of network elements. Each network element connects to two others, one on each side, except for two network elements at the ends which are connected on only one side. A closed ring can be formed by adding a connection between the two end nodes.

Operations Interface
Any interface providing you with information on the system behavior or control. These include the equipment LEDs, user panel, CenterLink CIT, office alarms, and all telemetry interfaces.

Operator
A user of the system with operator-level user privileges.

Optical Line Signal
A multiplexed optical signal containing multiple wavelengths or channels.

Optical Section
See "Span."

Orderwire
A section of the supervisory signal that is used for communication between sites.

Original Value Provisioning
Preprogramming of a system's original values at the factory. These values can be overridden using local or remote provisioning.

OS (Operations System)
A central computer-based system used to provide operations, administration, and maintenance functions.

OSF
Open Software Foundation Operations System Function

OSI (Open Systems Interconnection)
Referring to the OSI reference model, a logical structure for network operations standardized by the International Standards Organization (ISO).

OTU (Optical Translator Unit)
A circuit pack that regenerates an OC-48/STM-16 optical signal by converting the signal from an optical to an electrical format then converting the signal back into an optical signal that is compatible with Metropolis™ EON.

OTPM (Optical Translator Port Module)
Similar to the OTU (see "OTU"), except it is half the size.

OTPS
Optical Translator Port Signal

OUPSR (Optical Unidirectional Path Switched Ring)
A protection scheme where an OUPSR circuit pack (at the entrance of the DWDM ring) splits a single wavelength into two equal signals, sends one in each direction around the DWDM ring, then (at the exit of the DWDM) selects an acceptable signal from the two available.

Outage
A disruption of service that lasts for more than 1 second.

OW (Orderwire)
A dedicated voice-grade line for communications between maintenance and repair personnel.

P

Parallel Telemetry
A set of alarms and status information reported to an operations center.

Parameter
A variable that is given a value for a specified application. A constant, variable, or expression that is used to pass values between components.

Parity Check
Tests whether the number of ones (or zeros) in an array of binary bits is odd or even; used to determine that the received signal is the same as the transmitted signal.

Pass-Through
Paths that are cross-connected directly across an intermediate node in a network.

Path
A logical connection between the point at which a standard frame format for the signal at the given rate is assembled, and the point at which the standard frame format for the signal is disassembled.

Path Terminating Equipment
Network elements in which the path overhead is terminated.

PCB
Printed Circuit Board

PCM
Pulse Code Modulation

PDH
Plesiochronous Digital Hierarchy

PI
Physical Interface

Platform
A family of equipment and software configurations designed to support a particular application.

Plesiochronous Network
A network that contains multiple subnetworks, each internally synchronous and all operating at the same nominal frequency, but whose timing may be slightly different at any particular instant.

PM (Performance Monitoring)
Measures the quality of service and identifies degrading or marginally operating systems (before an alarm would be generated).

PMD (Polarization Mode Dispersion)
Output pulse broadening due to random coupling of the two polarization modes in an optical fiber.

POH (Path Overhead)
Informational bytes assigned to, and transported with the payload until the payload is demultiplexed. It provides for integrity of communication between the point of assembly of a virtual container and its point of disassembly.

Pointer
An indicator whose value defines the frame offset of a virtual container with respect to the frame reference of the transport entity on which it is supported.

POP
Point of Presence

Port (also called Line)
The physical interface, consisting of both an input and output, where an electrical or optical transmission interface is connected to the system and may be used to carry traffic between network elements. The words “port” and “line” may often be used synonymously. “Port” emphasizes the physical interface, and “line” emphasizes the interconnection. Either may be used to identify the signal being carried.

Port State Provisioning
A feature that allows a user to suppress alarm reporting and performance monitoring during provisioning by supporting multiple states (automatic, in-service, and not monitored) for low-speed ports.

POTS
Plain Old Telephone Service

PP
Pointer Processing

PRC (Primary Reference Clock)
The main timing clock reference in SDH equipment.

Preprovisioning
The process by which the user specifies parameter values for an entity in advance of some of the equipment being present. These parameters are maintained only in NVM. These modifications are initiated locally or remotely by either a CIT or an OS. Preprovisioning provides for the decoupling of manual intervention tasks (for example, install circuit packs) from those tasks associated with configuring the node to provide services (for example, specifying the entities to be cross-connected).

PRI
Primary

Proactive Maintenance
Refers to the process of detecting degrading conditions not severe enough to initiate protection switching or alarming, but indicative of an impending signal fail or signal degrade defect.

Protection Access
To provision traffic to be carried by protection tributaries when the port tributaries are not being used to carry the protected working traffic.

Protection Group Configuration
The members of a group and their roles, for example, working protection, line number, etc.

Protection Path
One of two signals entering a path selector used for path protection switching or dual ring interworking. The other is the working path. The designations working and protection are provisioned by the user, whereas the terms active path and standby path indicate the current protection state.

Protection State
When the working unit is currently considered active by the system and that it is carrying traffic. The “active unit state” specifically refers to the receive direction of operation — since protection switching is unidirectional.

Protection Switching
The switching of traffic from a malfunctioning line/channel to one that is working.

PROTN (Protection)
Extra capacity (channels, circuit packs) in transmission equipment that is not intended to be used for service, but rather to serve as backup against equipment failures.

PROV (Provisioned)
Indicating that a circuit pack is ready to perform its intended function. A provisioned circuit pack can be active (ACT), in-service (IS), standby (STBY), provisioned out-of-service (POS), or out-of-service (OOS).

Provisioning
Assigning a value to a system parameter.

PSDN
Public Switched Data Network

PSTN
Public Switched Telephone Network

PTE
Path Terminating Equipment

PVC
Permanent Virtual Circuit

PWR
Power

PWR ON
Power On

Q

Q-LAN
Thin Ethernet LAN which connects the manager to Gateway Network Elements so that management information between Network Elements and management systems can be exchanged.

QL (Quality Level)
The quality of the timing signal(s) provided to clock a Network Element. The level is provided by the Synchronization Status Marker which can accompany the timing signal. If the System and Output Timing Quality Level mode is “Enabled”, and if the signal selected for the Station Clock Output has a quality level below the Acceptance Quality Level, the Network Element “squelches” the Station Clock Output Signal, which means that no signal is forwarded at all.

Possible levels are:

- PRC (Primary Reference Clock)
- SSU_T (Synchronization Supply Unit - Transit)
- SSU_L (Synchronization Supply Unit - Local)
- SEC (SDH Equipment Clock)
- DUS (Do not Use for Synchronization)

QOS
Quality of Service

QOTU
Quad Optical Translator Unit

R

RAC
Rack connection panel

RAM
Random Access Memory

RCV
Receive

RDI (Remote Defect Indication)
An indication returned to a transmitting terminal that the receiving terminal has detected an incoming section failure. [Previously called far-end-receive failure (FERF).]

Reactive Maintenance
Refers to detecting defects/failures and clearing them.

Receive-Direction
The direction towards the Network Element.

Regeneration
The process of reconstructing a digital signal to eliminate the effects of noise and distortion.

Regenerator Loop
Loop in a Network Element between the Station Clock Output(s) and one or both Station Clock Inputs, which can be used to dejitterize the selected timing reference in network applications.

Regenerator Section Termination (RST)
Function that generates the Regenerator Section Overhead (RSOH) in the transmit direction and terminates the RSOH in the receive direction.

Reliability
The ability of a software system performing its required functions under stated conditions for a stated period of time. The probability for an equipment to fulfill its function. Some of the ways in which reliability is measured are: MTBF (Mean Time Between Failures) expressed in hours; Availability = (MTBF)/(MTBF+MTTR)(%) [where MTTR = mean time to restore]; outage in minutes per year; failures per hour; percentage of failures per 1,000 hours.

Remote Network Element
Any Network Element that is connected to the referenced Network Element through either an electrical or optical link. It may be the adjacent node on a ring, or N nodes away from the reference. It also may be at the same physical location but is usually at another (remote) site.

Repeater Terminal
In Metropolis™ EON, a bidirectional terminal consisting of a pair of optical amplifiers and the corresponding telemetry packs.

Restore Timer
Counts down the time (in minutes) during which the switch waits to let the worker line recover before switching back to it. This option can be set to prevent the protection switch continually switching if a line has a continual transient fault. This field is grayed out if the mode is non-revertive.

Revertive
A protection switching mode in which, after a protection switch occurs, the equipment returns to the nominal configuration (that is, the working equipment is active, and the protection equipment is standby) after any failure conditions that caused a protection switch to occur, clear, or after any external switch commands are reset. (See “Non-Revertive”.)

Revertive Switching
In revertive switching, there is a working and protection high-speed line, circuit pack, etc. When a protection switch occurs, the protection line, circuit pack, etc. is selected. When the fault clears, service “reverts” to the working line.

Ring
A configuration of nodes comprised of network elements connected in a circular fashion. Under normal conditions, each node is interconnected with its neighbor and includes capacity for transmission in either direction between adjacent nodes. Path switched rings use a head-end bridge and tail-end switch. Line switched rings actively reroute traffic over the protection capacity.

Route
A series of contiguous digital sections.

Router
An interface between two networks. While routers are like bridges, they work differently. Routers provide more functionality than bridges. For example, they can find the best route between any two networks, even if there are several different networks in between. Routers also provide network management capabilities such as load balancing, partitioning of the network, and trouble-shooting.

RPP
Reliability Prediction Procedure

RSOH
Regenerator Section OverHead; part of SOH

RST
Regenerator Section Termination

RT
Remote Terminal

RTRV
Retrieve

RZ (Return to Zero)
A code form having two information states (termed zero and one) and having a third state or an at-rest condition to which the signal returns during each period.

S

SA
Service Affecting

SA
Section Adaptation

SD
Signal Degrade

SDH (Synchronous Digital Hierarchy)
A hierarchical set of digital transport structures, standardized for the transport of suitable adapted payloads over transmission networks.

SDS
Standard Directory Service based on ANSI recommendation T1.245

SEC
Secondary

SEC
SDH Equipment Clock

Section
The portion of a transmission facility, including terminating points, between a terminal network element and a line-terminating network element, or two line-terminating network elements.

Section Adaptation
Function that processes the AU-pointer to indicate the phase of the VC-3/4 POH relative to the STM-N SOH and assembles/disassembles the complete STM-N frame.

Self-Healing
A network's ability to automatically recover from the failure of one or more of its components.

SEMF (Synchronous Equipment Management Function)
Function that converts performance data and implementation specific hardware alarms into object-oriented messages for transmission over the DCC and/or Q-interface. It also converts object-oriented messages related to other management functions for passing across the S reference points.

Server
Computer in a computer network that performs dedicated main tasks which generally require sufficient performance.

Service
The operational mode of a physical entity that indicates that the entity is providing service. This designation will change with each switch action.

SES (Severely Errored Seconds)
This performance monitoring parameter is a second in which a signal failure occurs, or more than a preset amount of coding violations (dependent on the type of signal) occurs.

SH
Short Haul

Short Reach
The capability to concatenate up to three spans between end terminals before regeneration is required.

Single-Ended Operations
Provides operations support from a single location to remote Network Elements in the same SDH subnetwork. With this capability you can perform operations, administration, maintenance, and provisioning on a centralized basis. The remote Network Elements can be those that are specified for the current release.

Site Address
The unique address for a Network Element.

Slot
A physical position in a shelf designed for holding a circuit pack and connecting it to the backplane. This term is also used loosely to refer to the collection of ports or tributaries connected to a physical circuit pack placed in a slot.

SM (Single-Mode Fiber)
An 8-m diameter low-loss, long-span optical fiber typically operating at either 1310 nm, 1550 nm, or both.

SmartManual
Available from the CenterLink launch console screen, the SmartManual provides assistance in determining LBO values.

SMN
SDH Management Network

SNC/I
SubNetwork Connection (protection) / Inherent monitoring

SNC/N
SubNetwork Connection (protection) / Non-Intrusive Monitoring

SNR (Signal-to-Noise Ratio)
The relative strength of signal compared to noise.

Software Backup
The process of saving an image of the current network element's databases, which are contained in its NVM, to a remote location. The remote location could be the CenterLink CIT or an OS.

Software Download
The process of transferring a generic (full or partial) or provisioned database from a remote entity to the target network element's memory. The remote entity may be the CenterLink CIT or an OS. The download procedure uses bulk transfer to move an uninterpreted binary file into the network element.

Software ID
Number that provides the software version information for the system.

SOH (Section Overhead)
Capacity added to either an AU-4 or assembly of AU-3s to create an STM-1. Contains always STM-1 framing and optionally maintenance and operational functions. SOH can be subdivided in MSOH (multiplex section overhead) and RSOH (regenerator section overhead).

SONET (Synchronous Optical NETwork)
The North American standard for the rates and formats that defines optical signals and their constituents.

Span
An uninterrupted bidirectional fiber section between two network elements.

Span Growth
A type of growth in which one wavelength is added to all lines before the next wavelength is added.

Span Loss
Loss (in dB) of optical power due to the span transmission medium (includes fiber loss and splice losses).

SPE
Synchronous Payload Envelope

SPI
SDH Physical Interface

Squelch Map
This map contains information for each cross-connection in a ring and indicates the source and destination nodes for the low-speed circuit that is part of the cross-connection. This information is used to prevent traffic misconnection in rings with isolated nodes or segments.

SSM
Synchronization Status Marker

SSMF
Standard Single-Mode Fiber

SSU_L
Synchronization Supply Unit — Local

SSU_T
Synchronization Supply Unit — Transit

Standby Path
One of two signals entering a constituent path selector, the standby path is the path not currently being selected.

State
The state of a circuit pack indicates whether it is defective or normal (ready for normal use).

Station Clock Input
An external clock may be connected to a Station Clock Input.

Status
The indication of a short-term change in the system.

STBY (Standby)
The circuit pack is in service but is not providing service functions. It is ready to be used to replace a similar circuit pack either by protection or by duplex switching.

STM
Synchronous Transport Module (SDH)

STM-N (Synchronous Transport Module, Level N)
A building block information structure that supports SDH section layer connections, where N represents a multiple of 155.52 Mb/s. Normally N=1, 4, 16, or 64.

STS
Synchronous Transport Signal (SONET)

Subnetwork
A group of interconnected/interrelated Network Elements. The most common connotation is a synchronous network in which the Network Elements have data communications channel (DCC) connectivity.

Supervisor
A user of the application with supervisor user privileges.

Suppression
A process where service-affecting alarms that have been identified as an “effect” are not displayed to a user.

SYNC
Synchronizer

Synchronization Messaging
Synchronization messaging is used to communicate the quality of network timing, internal timing status, and timing states throughout a subnetwork.

Synchronous
The essential characteristic of time scales or signals such that their corresponding significant instances occur at precisely the same average rate, generally traceable to a single Stratum-1 source.

Synchronous Network
The synchronization of transmission systems with synchronous payloads to a master (network) clock that can be traced to a reference clock.

Synchronous Payload
Payloads that can be derived from a network transmission signal by removing integral numbers of bits from every frame. Therefore, no variable bit-stuffing rate adjustments are required to fit the payload in the transmission signal.

SYSCTL
The system controller circuit pack that provides overall administrative control of the terminal.

SYSMEM
The system memory circuit pack that, in conjunction with the SYSCTL circuit pack, maintains a provisioning map of the entire system.

System Administrator
A user of the computer system on which the system's OS software application can be installed.

T

TARP
Target Identifiers Address Resolution Protocol

TBD
To Be Determined

TCA (Threshold-Crossing Alert)
A condition set when a counter exceeds a user-selected high or low threshold. A TCA does not generate an alarm but is available on demand through the CIT.

TDM (Time Division Multiplexing)
A technique for transmitting a number of separate data, voice, and/or video signals simultaneously over one communications medium by interleaving a portion of each signal one after another.

Telemetry Feedthrough
Operations capability for 4-fiber applications which allows the DCC to go from one end terminal (one subnetwork) through to the other collocated end terminal (separate subnetwork), thereby extending Metropolis™ EON operations domain.

Through (or Continue) Cross-Connection
A cross-connection within a ring, where the input and output tributaries have the same tributary number but are in lines opposite each other.

Through Timing
Refers to a network element that derives its transmit timing in the east direction from a received line signal in the east direction and its transmit timing in the west direction from a received line signal in the west direction.

THz
Terrahertz (10^{12} Hz)

TID (Target Identifier)
A provisionable parameter that is used to identify a particular Network Element within a network. It is a character string of up to 20 characters where the characters are letters, digits, or hyphens (-).

TL1 (Transaction Language 1)
A machine-to-machine communications language that is a subset of ITU's human-machine language.

TLM (Telemetry) Circuit Pack
The circuit pack that carries the Supervisory signal.

TMN
Telecommunications Management Network

TOPR
Total Optical Power Received

TR
Technical Requirement

Transmit-Direction
The direction outwards from the Network Element.

Tributary
A signal of a specific rate (2 Mb/s, 34 Mb/s, 140 Mb/s, VC12, VC3, VC4, STM-1 or STM-4) that may be added to or dropped from a line signal.

Tributary
A path-level unit of bandwidth within a port, or the constituent signal(s) being carried in this unit of bandwidth, for example, an STM-1 tributary within an STM-N port.

Tributary Unit Pointer
Indicates the phase alignment of the VC with respect to the TU in which it resides. The pointer position is fixed with respect to the TU frame.

True Wave™ Optical Fiber
Lucent Technologies' fiber generally called non-zero dispersion-shift fiber, with a controlled amount of chromatic dispersion designed for amplified systems in the 1550/1310 nm range.

TSA (Time Slot Assignment)
A capability that allows any tributary in a ring to be cross-connected to any tributary in any lower-rate, non-ring interface or to the same-numbered tributary in the opposite side of the ring.

TSI (Time Slot Interchange)
The ability of the user to assign cross-connections between any tributaries of any lines within a Network Element. Three types of TSI can be defined: Hairpin TSI, Inter-ring TSI (between rings), and Intra-ring TSI (within rings).

TSO
Technical Support Organization

T-TD (TL1 Translation Device)
Technical Support Organization

TTP
Trail Termination Point

TU (Tributary Unit)
An information structure which provides adaptation between the lower order path layer and the higher path layer. Consists of a VC-n plus a tributary unit pointer TU PTR.

TUG
Tributary Unit Group

Two-Way Point-to-Point Cross-Connection
A two-legged interconnection, that supports two-way transmission, between two and only two tributaries.

Two-Way Roll
The operation which moves a two-way cross-connection between tributary i and tributary j to a two-way cross-connection between the same tributary i and a new tributary k with a single user command.

U

UAS (Unavailable Seconds)
In performance monitoring, the count of seconds in which a signal is declared failed or in which 10 consecutively severely errored seconds (SES) occurred, until the time when 10 consecutive non-SES occur.

UBB (Universal Broadband)
This usually refers to the UBB circuit pack, which can transmit and receive signals with various protocols and with speeds between 16 Mb/s and 2.5 Gb/s.

UITS
Unacknowledged Information Transfer Service. Unconfirmed mode of LAPD operation.

UNEQ
Path Unequipped

UPSR (Unidirectional Path Switched Ring)
A SONET protection scheme where the original signal is split into two equal signals, one is sent in each direction around the SONET ring, then (at the exit of the ring) an acceptable signal is selected from the two available.

Upstream
At or towards the source of the considered transmission stream, for example, looking in the opposite direction of transmission.

User Privilege
Permissions a user must perform on the computer system on which the system software runs.

UTC (Universal Coordinated Time)
A time-zone independent indication of an event. The local time can be calculated from the Universal Coordinated Time.

V

V
Volts

VAC
Volts Alternating Current

Value
A number, text string, or other menu selection associated with a parameter.

Variable
An item of data named by an identifier. Each variable has a type, such as int or Object, and a scope.

VC (Virtual Container)
Container with path overhead.

VDC
Volts Direct Current

VF
Voice frequency

Virtual
Refers to artificial objects created by a computer to help the system control shared resources.

Virtual Circuit
A logical connection through a data communication (for example, X.25) network.

Voice Frequency (VF) Circuit
A 64 kilobit per second digitized signal.

Volatile Memory
Type of memory that is lost if electrical power is interrupted.

W

WAD
Wavelength Add/Drop

WAN (Wide Area Network)
A communication network that uses common-carrier provided lines and covers an extended geographical area.

Wander
Long term variations of amplitude frequency components (below 10 Hz) of a digital signal from their ideal position in time possibly resulting in buffer problems at a receiver.

Wavelength Blocking
At a WAD site with branching, if a wavelength goes express between two co-located end terminals, that wavelength can only be added or dropped at the third co-located end terminal. Wavelength interchange permits the wavelength on the their end terminal to be converted into an available wavelength at the other two end terminals.

Wavelength Interchange
The ability to change the wavelength associated with an STM-N signal into another wavelength.

WDCS
Wideband Digital Cross-Connect System

WDM (Wavelength Division Multiplexing)
A means of increasing the information-carrying capacity of an optical fiber by simultaneously transmitting signals at different wavelengths.

Wideband Communications
Voice, data, and/or video communication at digital rates from 64 kb/s to 2 Mb/s.

Working
Label attached to a physical entity. In case of revertive switching the working line or unit is the entity that is carrying service under normal operation. In case of nonrevertive switching the label has no particular meaning.

Working State
The working unit is currently considered active by the system and that it is carrying traffic.

WRT (Wait to Restore Time)
Corresponds to the time to wait before switching back after a failure has cleared, in a revertive protection scheme. This can be between 0 and 15 minutes, in increments of one minute.

WS
Work Station

WTR (Wait to Restore)
Applies to revertive switching operation. The protection group enters the WTR state when all Equipment Fail (EF) conditions are cleared, but the system has not yet reverted back to its working line. The protection group remains in the WTR state until the Wait-to-Restore timer completes the WTR time interval.

X

X.25
An ITU standard defining the connection between a terminal and a public packet-switched network

X.25 Interface/Protocol
The ITU packet-switched interface standard for terminal access that specifies three protocol layers: physical, link, and packet for connection to a packet-switched data network.

Z **Zero Code Suppression**

A technique used to reduce the number of consecutive zeros in a line-coded signal (B3ZS, B8ZS).

Index

10 Gb/s transmission
feature description, 2-3
1x1 protection, 6-7 6-17
32 channel transmission
feature description, 2-3

A
access
cable, 10-2
CIT port, 4-93 6-3
front, 5-44
administration, 6-11
AGNE, 6-16
alarm gateway network element, 6-16
applications
multi-regenerated spans, 3-8
single-OA, 3-4
two-OA, 3-4
with repeaters, 3-8
APSD, 6-22
timing, 6-22
architecture
Metropolis® EON system control, 4-14
automatic
power shutdown and restart, 6-22
protection, 6-17
version recognition, 6-11

B
benefits, 1-11
board controller, 4-14
BRH classification, 10-4
building blocks for Metropolis® EON, 7-3

C
cables
access, 10-2
into, 4-94
power, 4-102
cabling, 4-107
capacity, 10-5
CD-ROM, 6-3
CenterLink-CIT, 6-2 6-3 6-35
remote access, 6-4
circuit pack descriptions
introduction, 4-1
circuit pack sparing, 7-44
circuit pack/unit and compatible software, 4-22
circuit pack/unit descriptions
compatible software, 4-22
circuit packs
CLEI, 7-49
comcodes, 7-49
control, 4-26
IAOLRP, 4-43
OTCTL, 4-37
SYSCTL, 4-26
SYSMEM, 4-27
TLM, 4-39
TOHCTL, 4-33
ordering, 7-10
OTU/OTPM
muxing (2DM25), 4-72
OTUs, 4-68 4-78 4-81 4-91
preprovisioning, 6-36
QOTU, 4-87 4-89 4-92
spare, 7-49
sparing lead time, 7-44
transmission, 4-44
OA2, 4-46 4-50
circuit packs dimensions, 10-23
CIT
access, 4-93 6-3
access through DCE port, 6-3
access through DTE port, 6-3

functions, 6-2
security, 6-2
CMISE, 1-15
CMISE software download, 1-16
compliance
transmission standards, 10-6
connectors
types of, 4-107
control, 4-14
control circuit packs, 4-26
conventions, xxii
copper cables
ordering, 7-22 7-28
course registration, xxv 8-4
customer maintenance signal, 7-10

D

Dantel, Inc., 7-40
EMDU, 6-7
orderwire shelf, 7-40
DCC, 10-21
types of protection switching, 6-17
dense wave division multiplexing, 1-3 1-10
design life, 9-4
dimensions of Metropolis® EON equipment, 10-22
dispersion
optical, 10-5
dispersion compensation module shelf, 4-21
document conventions, xxii
documentation
list numbers, 7-42
numbers, xxiii
ordering, 7-42
set, xxiii
dual-facing shelf, 3-8 3-15 6-4
DWDM, 1-3 1-10

E

electromagnetic compatibility, 10-18
electrostatic discharge, 5-46
EMDU, 6-7
Dantel, Inc., 6-7
Harris Corp., 6-7
end terminal, 4-16
engineering rules, 5-3 5-9
two-OA, 5-4 5-6 5-7 5-8 5-15
two-OA applications, 5-4 5-6 5-7 5-8 5-15
enviromental specifications, 10-18
EPROM, 4-27
equipment
interconnection, 5-46
inventory, 6-13
equipment dimensions, 10-22
external miscellaneous discrete unit, 6-7

F

facility failure, 6-18
factory setting, 4-107
failure-in-time (FIT) rates, 9-4
FC connector, 4-107
features
low voltage cut-off, 10-6
feedback form, xxv
fibers
ordering, 7-29
FIT (failure-in-time) rates, 9-4
floor
plan layout, 5-44
floor loading specifications, 10-24
floor plan, 5-44
functions, 1-10

G

GNE, 6-16
access to SONET maintenance subnetwork, 6-16
graphical user interface, 1-4
growth circuit packs
ordering, 7-14

H

handling/transportation constrains, 10-19
hardware unavailability, 9-6
Harris Corp.
C1000, 7-40
EMDU, 6-7
history of product, 1-13 2-1
humidity/temperature specifications, 10-19

I

IAO LAN, 1-15 10-21
IAOLAN, 4-16
IAOLRP, 4-16
IAOLRP (Intra-Office Line Relay Pack), 4-43
infant mortality, 9-4
integration cables
ordering, 7-24
interconnection of equipment, 5-46
interconnection panel, 4-93
OT Complementary

Shelves, 4-94
OT System Controller shelf, 4-94
interface
miscellaneous discrete, 6-7
operations, 6-2
intraoffice electrical non-transmission cables
ordering, 7-26
Intra-Office Line Relay Pack IAOLRP), 4-43
Introduction, 5-44
ITM SNC, 1-4

J jumpers
lightguide, 10-3

L labels
ordering, 7-33
LBO, 4-107 4-111 5-3 5-9
color types, 4-111
LBO kits
ordering, 7-32
LC connector, 4-107
LDA4 TLM circuit pack, 1-16
lightguide
build-out (LBO), 5-3 5-9
connectors, 10-3
jumpers, 10-3
lightguide build-outs, 5-3 5-9
line rate, 10-5
low voltage cut-off, 10-6

M maintainability specifications, 9-6
maintenance
objectives, 6-14
optical transmission, 6-17
proactive, 6-14
reactive, 6-14
remote, 6-15
manuals, xxiii
me, 10-22
mean-time-between-maintenance, 9-9
Metropolis® EON
benefits, 1-11
functions, 1-10
optical transmission elements, 3-3
shelf descriptions, 4-14
Metropolis® EON architecture
board controller, 4-14
system controller, 4-94
Metropolis® EON circuit packs, 4-25
Metropolis® EON shelf
DCM shelf, 4-21
end terminal, 4-16
IAOLRP, 4-16
OT System Controller, 4-19
Metropolis® EON shelf descriptions, 4-16
Metropolis® EON system control, 4-14
Metropolis™ EON
benefits, 1-11
Metropolis™ EON architecture
control, 4-14
OT controller, 4-14
system controller, 4-14
Metropolis™ EON shelf
IAOLAN, 4-16
repeater shelf, 4-19
Microsoft
Internet Explorer, 6-3
Windows 95, 6-3
miscellaneous products
ordering, 7-34
multimode
lightguide jumpers, 10-3
multi-regenerated spans, 3-8

N network
planning considerations, 5-1

O OA, 3-4 4-52
OA output power, 10-15
OAM&P, 4-93 6-1
ODU
provisioning, 6-37
ODU units
description, 4-65
OMU units
provisioning, 6-37
operations
domains, 6-4
interfaces, 6-2
operations interface connectivity
DCC, 10-21
IAO LAN, 10-21
OSI LAN, 10-20
TCP/IP, 10-20
X.25, 10-20
operations interfaces, 10-20
EMS to NE, 10-20

NE to NE, 10-21
OPS, 1-10
optical
capacity, 10-5
connectors, 10-3
dispersion, 10-5
line ID, 6-17
line rate, 10-5
protection switching, 6-20
reflections tolerance, 10-6
return loss, 10-5
safety, 10-4
Optical Amplifier (OA2), 4-46 4-50
Optical Demultiplexer Unit (ODU)
See ODU units
optical interface, 10-3
optical line ID, 6-17
optical line rate, 10-5
optical reflections tolerance, 10-6
optical return loss, 10-5
Optical Translator Unit (OTU). See OTUs
optical transmission elements, 3-3
Optical Uniderectional Path-switched Ring (OUPSR), 4-83
ordering
building blocks, 7-3
circuit packs, 7-10
copper cables, 7-22 7-28
integration cables, 7-24
intraoffice electrical non-transmission cables, 7-26
documentation, 7-42
fibers, 7-29
growth circuit packs, 7-14
labels, 7-33
LBO kits, 7-32
miscellaneous products, 7-34
Relese 8.0 building blocks, 7-3
software, 7-42
spare circuit packs, 7-49
terminal equipment, 7-9
orderwire, 5-39 6-34
original values
factory assigned, 6-35
OSI LAN, 10-20
OT controller, 4-14
OT Controller (OTCTL), 4-37
OT interconnection panel, 4-94
OT System Controller, 4-19
OTCTL (OT Controller), 4-37
OTU/OTPM
2DM25
functionality, 4-72
OTU/OTPM input power, 10-10
OTUs
functionality, 4-68 4-78 4-81 4-91
OUPSR (Optical Unidirectional Path-switched Ring, 4-83

P

panel, 4-95
parameters
provisionable, 6-36
Pentium, 6-3
performance monitoring, 6-27
per-wavelength protection switching
QOTU, 2-3 2-4
planning
considerations, 5-1
network, 5-1
power, 4-102
cables, 4-102 4-103
distribution philosophy, 4-102
planning, 5-47
restart, 6-22
shutdown, 6-22
specifications, 5-47
power specifications, 10-9
proactive maintenance, 6-14
product quality, 9-2
product reliability, 9-2
protection switching, 6-20
DCC, 6-17
protection switching, optical, 6-20
provisionable parameters, 6-36
provisioning, 6-35
circuit pack replacement, 6-36
CIT parameters
local and remote, 6-35
consistency audits, 6-31
local or remote, 6-35
map, 6-36
parameters, 6-36
parameters and original value, 6-35
slot preprovisioning,

6-36

Q

QOTU, 4-87 4-89 4-92
port designations, 4-87 4-89 4-92
QOTU (Quad Optical Translator Unit), 2-3 2-4
Quad Optical Translater Unit (QOTU), 2-3 2-4
Quad Optical Translator Unit, 4-87 4-89 4-92

R

reactive maintenance, 6-14
Release 8.0. history, 1-13 2-1
reliability guidelines, 9-2
remote
alarms
in same subnetwork, 6-16
NE status, 6-16
repeater shelf, 4-19
reports, 6-32
required materials for Metropolis™ EON, 7-3
requirements
APSD timing, 6-22
return loss, 10-5

S

SC connector, 4-107
security
network element login, 6-11
port, 6-11
tiers of, 6-11
types of, 6-11
See also authorization
serial port, 6-3
shelf descriptions, 4-14
signal to noise ratio (SNR), 10-8
silent feature unavailability, 9-8
single-mode
lightguide jumpers, 10-3
single-OA, 3-4
software
list numbers, 7-42
ordering, 7-42
software copy, local and remote, 6-17
software upgrade, local and remote, 6-17
SONET, 1-4
span
multi-regenerated, 3-8
spare circuit packs
ordering, 7-49
spares
circuit packs, 7-49
sparing
circuit pack, 7-44
guidelines, 7-44
lead time, 7-44
specifications
floor loading, 10-24
optical signal power
1.3 microns, 10-10
ST connector, 4-107
suitcasing, xxv 8-4
supervisory signal, 6-17
SYSCTL (System Controller), 4-26
SYSCTL circuit pack, 6-35
SYSMEM
EPROM, 4-27
SYSMEM (System Memory), 4-27
SYSMEM circuit pack, 6-35
system
planning and engineering, 5-1
startup, 6-13
system controller, 4-14 4-94
System Controller (SYSCTL), 4-26
System Memory (SYSMEM), 4-27
system reliability, 4-102
system specifications, 10-2

T

TCP/IP, 10-20
TL1 Translation Device, 10-20
telemetry
TLM, 6-37
telemetry feed-through
terminal designations, 6-37
temperature/humidity specifications, 10-19
terminal equipment
ordering, 7-9
TL1, 6-3
TL1 commands, 6-35
TLM (Telemetry circuit pack), 4-39
TLM circuit pack, 6-37
TOHCTL (Tributary Overhead Controller), 4-33
tone, 6-17
frequencies, 10-7
topologies, 5-3 5-14
transmission
circuit packs, 4-44
end terminal, 3-4

medium, 10-2

transportation/handling constrains, 10-19

Tributary Overhead Controller (TOHCTL), 4-33

two-OA, 3-4 5-4 5-6 5-7 5-8 5-15

two-OA/two-OA, 3-15

U unavailability

hardware, 9-6

OT channel, 9-6

silent failure, 9-8

telemetry channel, 9-6

V version recognition

automatic, 6-11

W warranty, 9-4

worldwide services, 8-2

X X.25, 10-20