Lucent Technologies
Bell Labs Innovations

WaveStar® OLS 1.6T (400G/800G)

Applications Planning Guide (APG)

Release 6.2

365–575–713R6.2
Issue 1
July 2002

Copyright © 2002 Lucent Technologies. All Rights Reserved.

This material is protected by the copyright laws of the United States and other countries. It may not be reproduced, distributed, or altered in any fashion by any entity (either internal or external to Lucent Technologies), except in accordance with applicable agreements, contracts or licensing, without the express written consent of Lucent Technologies and the business management owner of the material.

Lucent Technologies 1–888–LTINFO6 (domestic)
1–317–322–6848 (international)

Notice

The information in this document is subject to change without notice. Although every effort has been made to make this document as accurate, complete, and clear as possible, Lucent Technologies and its predecessors assume no responsibility for any errors that may appear in this document.

Mandatory customer information

Lucent Technologies WaveStar® OLS 1.6T (400G/800G)

Security statement

In rare instances, unauthorized individuals make connections to the telecommunications network. In such an event, applicable tariffs require that the customer pay all network charges for traffic. Lucent technologies and its predecessors cannot be responsible of such charges and will not make any allowance or give any credit for charges that result from unauthorized access.

Trademarks

5ESS is a trademark of Lucent Technologies.

LGX is a trademark of Lucent Technologies.

Paradyne is a trademark of Lucent Technologies.

SLC is a trademark of Lucent Technologies.

ST is a trademark of Lucent Technologies.

TrueWave is a trademark of Lucent Technologies.

CLEI is a trademark of Telcordia Techologies, Inc.

CLLI is a trademark of Telcordia Techologies, Inc.

CLCI is a trademark of Telcordia Techologies, Inc.

CLFI is a trademark of Telcordia Techologies, Inc.

COMMON LANGUAGE is a trademark of Telcordia Techologies, Inc.

CSA is a trademark of Canadian Standards Association

DACScan is a trademark of Lucent Technologies.

DANTEL is a trademark of DANTEL Incorporated

MS-DOS is a trademark of Microsoft Corporation

Internet Explorer is a trademark of Microsoft Corporation

Windows 95, Windows 98, Windows 2000, Windows NT is a trademark of Microsoft Corporation

Pentium is a trademark of Intel Corporation

Pentium 4 is a trademark of Intel Corporation

Ordering information

The ordering number for this document is 365-575-713R6.2. To order this document, call 1-888-LUCENT8 (1-888-582-3688) or fax 1-800-566-9568 (USA). Outside USA: For Europe, The Middle East, and Africa (EMEA) Asia, Pacific Region, and China Caribbean, Latin America (CALA), phone: 1-317-322-6416 or E-Mail: intlorders@lucent.com. For Canada, North American Region, phone: 1-317-322-6615 or E-Mail: intlnaorders@lucent.com.

Mail orders to: Lucent Learning Organization, Attention: Order Entry, 2855 N. Franklin Road, P.O. Box 19901, Indianapolis, IN 46219. Worldwide fax: 1-317-322-6699. Web orders for commercial customers: http://www.lucentdocs.com or http://www.lucent8.com. Web orders for Lucent Associates: http://www.cic.lucent.com

Lucent Technologies

Support

Technical support

Lucent Technologies Customer Technical Assistance Management (CTAM) center provides a technical assistance telephone number that is monitored around the clock. Calls are routed to either the Regional Technical Assistance Center (RTAC) or Technical Support Services (TSS). For technical assistance in the US, please call 1-866-LUCENT8. International customers, please call 1-630-224-4672.

Information product support

Contact the Customer Information Center at 1-888-LUCENT8 or *http://www.lucent8.com*.

Contents

About this information product

Purpose xxvii

Reason for reissue xxvii

Safety labels xxvii

Intended audience xxvii

How to use this information product xxviii

Conventions used xxviii

Related documentation xxviii

How to comment xxix

1 Introduction

Overview 1-1

Introduction to the WaveStar® OLS 1.6T 1-2

Laser Safety and Lucent Products 1-5

WaveStar® OLS 1.6T Components 1-6

2 Features

Overview 2-1

Release 6.2 System Features 2-2

Highlights of Release 6.2 2-3

WaveStar® OLS 1.6T Standard Features 2-5

Information on Prior Releases 2-15

Maintenance Capabilities 2-16

3 System Description

Overview 3-1

System Overview

Overview 3-3

Functional Theory of Operation 3-4

System Components 3-6

Terminals

Overview 3-7

End Terminal 3-8

Full Add/Drop Ring Terminal 3-9

Repeater 3-10

2-Fiber Wavelength Add/Drop (WAD Type 2) 3-11

Transmission Circuit Packs

Overview 3-12

Optical Translator Unit (OTU) 3-13

4:1 10G Multiplexing (MUX) OTU (OTU70) 3-15

Optical Multiplexer Unit (OMU) 3-17

Optical Amplifier (OA) 3-20

Dispersion Compensation Module (DCM) 3-22

Wavelength Add/Drop Type 2 (WAD5/6) 3-23

Optical Demultiplexer Unit (ODU) 3-26

CLSC 3-29

Optical Redundancy Switching (ORS) 3-32

Control Circuit Packs

Overview 3-34

Optical MONitor (OMON) 3-35

Supervisory Circuit Pack (SUPVY) 3-38

Bay, Overhead, and System (BOS) Controller 3-41

External Interface (EI) 3-43

Power

Overview 3-46

Power Cables 3-47

Power Distribution for a System Bay 3-48

Power Distribution for a Complementary Bay 3-49

Power Distribution for a Growth Bay 3-50

Power Distribution for a Miscellaneously Mounted 2-Fiber Repeater Shelf 3-51

Circuit Pack Power Distribution 3-52

PC Requirements 3-53

4 Applications

Overview 4-1

Topologies and Applications Overview 4-2

End-to-End with Repeater(s) 4-3

Applications for Through OTUs 4-4

2-Fiber 4-Channel WAD Type 2 4-5

Ring Applications 4-6

5 System Planning and Engineering

Overview 5-1

Engineering Rules

Overview 5-3

General Notes 5-4

Engineering Rules for the WaveStar® OLS 1.6T

Overview 5-6

Engineering Rules for SSMF 5-7

Engineering Rules for TeraLight™ Fiber 5-10

Engineering Rules for TrueWave RS 5-12

Engineering Rules for TrueWave® Classic 5-15

Engineering Rules for TrueWave® Plus 5-17

Engineering Rules for Corning E-LEAF™ 5-19

Engineering Rules for Corning LEAF ™ 5-22

Engineering Rules for Corning LS 5-24

Engineering Rules for Dispersion Shifted Fiber 5-26

Path Penalties for Polarization Mode Dispersion (PMD) Effects

Overview 5-27

5-28

Dispersion Compensation Rules

Overview 5-30

General Notes on Dispersion Compensation 5-31

Dispersion Compensation Rules for the OLS 1.6T 5-32

Wavelength (Channel) Growth Plan

Overview 5-43

Channel Plans 5-44

Concatenating Systems

Overview 5-56

Maximum Number of OTUs Between Client Equipment 5-57

Data Communications Networks

Overview 5-58

DCN Parameter Specifications 5-61

General Information 5-63

Remote Access from a TL1-Based OS 5-66

Network Partitioning Engineering Rules and Guidelines 5-67

Installation with IS-IS Areas for Level 2 Routing 5-79

SDL Provisioning 5-83

SNMS Connections 5-84

6 Bay Configurations

Overview 6-1

Bays

Overview 6-3

Bay Configuration Philosophy 6-5

Bay Configurations

Overview 6-7

Available Configuration 6-8

2-Fiber End Terminal 6-9

2-Fiber Ring Terminal 6-11

2-Fiber WAD Terminals 6-14

2-Fiber Repeater 6-16

Floor Plan Data —Lucent Seismic Bay Frameworks

Overview 6-17

System Bay 6-18

Complementary Bay 6-21

Growth Bay 6-24

Floor Plan Data Sheets —2200 mm ETSI Seismic Frame

Overview 6-27

System Bay 6-28

Complementary Bay 6-32

Growth Bay 6-36

Floor Plan Data —Miscellaneously Mounted Shelves

Overview 6-39

2-Fiber Repeater 6-40

7 Technical Specifications

Overview 7-1

General System Specifications 7-3

Physical Dimensions and Specifications 7-6

Environmental Specifications 7-8

Handling and Transportation Specifications 7-9

Reliability Specifications 7-10

Infant Mortality and Design Life 7-15

C-Band OA Output Power Specifications 7-16

L-Band OA Output Power Specifications 7-20

System Current Drain Definitions 7-24

System Power Dissipation Definitions 7-25

Sizing Feeders and Fuses for Bays/Shelves 7-27

2-Fiber End Terminal (80 Channels of OC-192/STM-64) Power Specifications 7-29

2-Fiber Ring Terminal (80 Channels of OC-192/STM-64) Power Specifications 7-31

2-Fiber WAD Terminal Type 2 (OC-192/ STM-64) Power Specifications 7-34

2-Fiber Repeater Power Specifications 7-36

Circuit Pack Technical Specifications 7-37

Circuit Pack Output Wavelengths 7-52

C-Band DCM Values 7-63

L-Band DCM Values 7-64

A Optical Spectrum/Channel Information A-1

Overview A-1

C-Band OMU Optical Spectrum Details A-2

L-Band OMU Optical Spectrum Details A-5

C-Band ODU Optical Spectrum Details A-8

L-Band ODU Optical Spectrum Details A-11

WAD Channel Allocations A-14

GL Glossary GL-1

IN Index IN-1

List of Figures

1 Introduction

1-1 Typical 2-Fiber WaveStar® OLS 1.6T 1-6

2 Features

2-1 Through OTU Applications in Back-to-Back End Terminals and Full Add/Drop Ring Terminals 2-7

2-2 OLS Compatible Optics - Block Diagram 2-9

3 System Description

3-1 WaveStar® OLS 1.6T OLS Simplified Block Diagram 3-4

3-2 2-Fiber End Terminal Application 3-8

3-3 2-Fiber Full Add/Drop Application 3-9

3-4 Typical 2-Fiber Repeater Application 3-10

3-5 2-Fiber WAD Application 3-11

3-6 Simplified Block Diagram of an OTU 3-13

3-7 Optical Translator Unit Front Panel Labeling 3-14

3-8 Application Featuring 4:1 10G MUX OTU 3-15

3-9 4:1 10G MUX OTU Front Panel Labeling 3-16

3-10 Block Diagram — OMU1 and OMU2 3-17

3-11 C-Band Optical Multiplexer Units Front Panel Labeling 3-18

3-12 L-Band Optical Multiplexer Units Front Panel Labeling 3-19

3-13 OA Block Diagram 3-20

3-14 OA Front Panel Labeling 3-21

3-15 Block Diagram of an OA Using DCMs 3-22

3-16 Simplified Block Diagram of WAD5/6 3-24

3-17 WAD5/6 Circuit Packs Front Panel Labeling 3-25

3-18 Block Diagram — ODU 3-26

3-19 C-Band ODU Front Panel Labeling 3-27

3-20 L-Band ODU Front Panel Labeling 3-28

3-21 CLSC-S Functional Block Diagram 3-29

3-22 CLSC Front Panel Labeling-LC Connector 3-30

3-23 CLSC Front Panel Labeling-LC/Universal Connector 3-31

3-24 ORS Circuit Pack Functional Block Diagram 3-32

3-25 ORS Front Panel Labeling 3-33

3-26 Simplified Block Diagram of OMON Function 3-35

3-27 OMON Front Panel Labeling 3-36

3-28 Supervisory Circuit Pack Functional Block Diagram 3-39

3-29 Supervisory Pack Front Panel Labeling 3-40

3-30 BOS Controller Functional Block Diagram 3-41

3-31 BOS Front Panel Label 3-42

3-32 EI Circuit Pack Functional Block Diagram 3-43

3-33 EI Front Panel Label 3-44

3-34 Power Distribution for a System Bay (Functional Block Diagram) 3-48

3-35 Power Distribution for a Complementary Bay (Functional Block Diagram) 3-49

3-36 Power Distribution for a Growth Bay (Functional Block Diagram) 3-50

3-37 Power Distribution for a Miscellaneously Mounted 2-Fiber Repeater Shelf (Functional Block Diagram) 3-51

4 Applications

4-1 Typical End-to-End Application with Repeater 4-3

4-2 Examples of 2-Fiber Ring Terminals with Full Add/Drop 4-4

4-3 2-Fiber 4-Channel Wavelength Add/Drop Type 2 Terminal Block Diagram 4-5

4-4 Example of 2-Fiber Ring Terminals with Full Add/Drop 4-6

4-5 Example of a 3-Node, Closed 2-Fiber Ring 4-6

4-6 2-Fiber 4-Channel Wavelength Add/Drop Type 2 Application 4-7

5 System Planning and Engineering

5-1 C-Band Optical Channel Bands and OTU Numbers 5-45

5-2 L-Band Optical Channel Bands and OTU Numbers 5-47

5-3 String Examples 5-59

5-4 Symbol Key 5-63

5-5 Express Datalink — Single Level 2 Routing Domain 5-65

5-6 NE4 and NE5 Not Reachable— TL1-Based OS Over LAN Connection 5-66

5-7 WaveStar® OLS 1.6T Flexible NSAP Format 5-67

5-8 Single versus Dual Level 2 Routing Domains for Network Partitioning 5-70

5-9 Dual Homed Network Configuration, SNMS Over An IAO LAN 5-71

5-10 Possible Number of Level 2 Node Configurations in a Ring 5-72

5-11 All Level 2 Nodes in a Ring are in the Same Area 5-73

5-12 A Single Node is in a Different Area 5-74

5-13 A Pair of Adjacent Level 2 Nodes are in the Same Area (that is, Dual Homing Configuration) 5-74

5-14 Recommended Area Partition to Survive a Single Link Failure Within a Level 1 Area. 5-75

5-15 Network Partitioning for LAN Connection with Two NEs Per Area. 5-76

5-16 Data Communication Connectivity Between NEs in an Area 5-77

5-17 Network Partitioning for a LAN Connection between Two Areas 5-78

5-18 Area Partitioning Example That Uses the IAO LAN Between the SNMS and NEs 5-85

6 Bay Configurations

6-1 Typical WaveStar® OLS 1.6T 2-Fiber End Terminal 6-10

6-2 Typical WaveStar® OLS 1.6T 2-Fiber Ring Terminal (Bays 1 through 3) 6-12

6-3 Typical WaveStar® OLS 1.6T 2-Fiber Ring Terminal (Bays 4 through 6) 6-13

6-4 Bay Configuration for 2-Fiber WAD Type 2 Terminal (C-Band) 6-14

6-5 2-Fiber Repeater 6-16

6-6 System Bay — Lucent Seismic Network Bay Framework 6-18

6-7 System Bay — Framework Line-Up 6-18

6-8 Complementary Bay — Lucent Seismic Network Bay Framework 6-21

6-9 Complementary Bay — Framework Line-Up 6-21

6-10 Growth Bay — Lucent Seismic Network Bay Framework 6-24

6-11 System Bay — 2200 mm ETSI Seismic Frame Dimensions 6-28

6-12 System Bay — 2200 mm ETSI Seismic Frame Lineup 6-28

6-13 Complementary Bay — 2200 mm ETSI Seismic Frame Dimensions 6-32

6-14 Complementary Bay — 2200 mm ETSI Seismic Frame Lineup 6-32

6-15 Growth Bay — 2200 mm ETSI Seismic Frame Dimensions 6-36

6-16 2-Fiber Repeater — Unmounted Miscellaneously Mounted Shelf 6-40

7 Technical Specifications

7-1 Bay (Cabinet) Layout for Calculating System Power Density 7-26

List of Tables

3 System Description

3-1 Power Cable Color Codes 3-47

3-2 Customer-Provided Desktop PC Requirements 3-53

5 System Planning and Engineering

5-1 SSMF — C-Band 800G (No Upgrade to 1.6T) 5-7

5-2 SSMF — L-Band 800G (No Upgrade to 1.6T) 5-7

5-3 SSMF— 1.6T 5-8

5-4 TeraLight™ —C-Band 800G (No Upgrade to 1.6T) 5-10

5-5 TeraLight™ —L-Band 800G (No Upgrade to 1.6T) 5-10

5-6 TeraLight™ —1.6T 5-11

5-7 Truewave RS—C-Band 800G (No Upgrade to 1.6T) 5-12

5-8 Truewave® RS—L-Band 800G (No Upgrade to 1.6T) 5-12

5-9 Truewave RS—1.6T 5-13

5-10 TrueWave® Classic—C-Band 800G (No Upgrade to 1.6T)[1] 5-15

5-11 TrueWave Classic—L-Band 800G (No Upgrade to 1.6T) 5-16

5-12 TrueWave® Classic—1.6T Configuration 5-16

5-13 TrueWave® Plus— 800G L-Band (No Upgrade to 1.6T) 5-17

5-14 TrueWave® Plus—800G C-Band (No Upgrade to 1.6T) 5-17

5-15 TrueWave® Plus—1.6T 5-18

5-16 Corning E-Leaf —800G L-Band (No Upgrade to 1.6T) 5-19

5-17 Corning E-Leaf – 800G C-Band (No Upgrade to 1.6T) 5-19

5-18 Corning E-Leaf —1.6T 5-20

5-19 Corning LEAF — 800G L-Band (No Upgrade to 1.6T) 5-22

5-20 Corning LEAF — 800G C-Band (No Upgrade to 1.6T)[1] 5-22

5-21 Corning LEAF—1.6T 5-23

5-22 Corning LS—800G L-Band (No Upgrade to 1.6T) 5-24

5-23 Corning LS—800G C-Band (No Upgrade to 1.6T) 5-24

5-24 Corning LS—1.6T 5-25

5-25 DSF— 800G L-Band (No Upgrade to 1.6T) 5-26

5-26 Path Penalities for PMD Effects 5-28

5-27 DC Rules - Standard Applications (Up To Seven Spans) 5-32

5-28 DC Rules - Long-Reach Applications (Eight to 12 Spans) 5-32

5-29 C-Band Dispersion by Fiber Type 5-33

5-30 C-Band Dispersion Compensation Module Data 5-34

5-31 Corning LS DC Rules - Standard Application (Up To Seven Spans) 5-34

5-32 Corning LS Dispersion Compensation Module Data 5-35

5-33 L-Band DCM Rules - Standard Applications (One Span) 5-36

5-34 L-Band DCM Rules - Standard Applications (Two to Six Spans) 5-36

5-35 L-Band DCM Rules - Standard Applications (Seven to 12 Spans) 5-36

5-36 L-Band DCM Rules - SSMF Applications 5-36

5-37 L-Band DCM Data 5-37

5-38 L-Band Dispersion by Fiber Type 5-39

5-39 L-Band Dispersion for Fiber Type LS 5-39

5-40 L-Band Dispersion Compensation Module Data 5-39

5-41 L-Band SSMF DCM Data 5-40

5-42 Corning LS Dispersion Compensation Module Data 5-42

5-43 Channel Plans for L-Band 5-47

5-44 Channel Plans for C-Band 5-48

5-45 C-Band OTU Growth Sequence 5-49

5-46 C-Band OTU Additional Growth Sequence 5-50

5-47 Equivalency Chart/OMU1and ODU1C Compatibility 5-51

5-48 Equivalency Chart/OMU2 and ODU2C Compatibility 5-52

5-49 L-Band OTU Growth Sequence 5-54

5-50 L-Band OTU Additional Growth Sequence 5-55

5-51 Maximum Number of OTUs Between Client Equipment 5-57

5-52 Network Parameter Specifications 5-61

5-53 Fixed Length ISO DCC NSAP Format 5-68

6 Bay Configurations

6-1 Bays and Components 6-3

6-2 System Capacity and Available Slots Versus Configured Bays 6-9

6-3 System Capacity and Available Slots Versus Configured Bay 6-11

6-4 System Capacity and Available Slots Versus Configured Bay WAD Type 2 6-15

6-5 Lucent Seismic System Bay Physical Data 6-19

6-6 Lucent Seismic System Bay Cabling Data 6-19

6-7 Lucent Seismic Complementary Bay Physical Data 6-22

6-8 Lucent Seismic Complementary Bay Cabling Data 6-22

6-9 Lucent Seismic Growth Bay Physical Data 6-24

6-10 Lucent Seismic Growth Bay Cabling Data 6-25

6-11 2200 mm ETSI Seismic Frame — System Bay Physical Data 6-29

6-12 2200 mm ETSI Seismic Frame — System Bay Cabling Data 6-29

6-13 2200 mm ETSI Seismic Frame — Complementary Bay Physical Data 6-33

6-14 2200 mm ETSI Seismic Frame — System Bay Cabling Data 6-33

6-15 2200 mm ETSI Seismic Frame — Growth Bay Physical Data 6-36

6-16 2200 mm ETSI Seismic Frame — Growth Bay Cabling Data 6-37

6-17 Miscellaneously Mounted 2-Fiber Repeater Shelf Physical Data 6-40

6-18 2-Fiber Miscellaneously Mounted Repeater Shelf Cabling Data 6-41

7 Technical Specifications

7-1 WaveStar® OLS 1.6T Power Specifications 7-4

7-2 WaveStar® OLS 1.6T Physical Dimensions 7-6

7-3 WaveStar® OLS 1.6T Circuit Pack Dimensions 7-6

7-4 WaveStar® OLS 1.6T Floor Loading Specifications 7-7

7-5 WaveStar® OLS 1.6T Environmental Operating Conditions 7-8

7-6 WaveStar® OLS 1.6T Handling and Transportation Conditions 7-9

7-7 WaveStar® OLS 1.6T Circuit Pack FIT Rates 7-10

7-8 WaveStar® OLS 1.6T 2-Fiber System Channel Unavailability (Without ORS) 7-11

7-9 WaveStar® OLS 1.6T 2-Fiber System Channel Unavailability (Ring Topology) 7-11

7-10 Mean-Time-Between-Maintenance Activity 7-12

7-11 Unscheduled Maintenance Events 7-13

7-12 C-Band OA Output Power for Channel Counts from 1 to 80 Channels 7-16

7-13 L-Band OA Output Power for Channel Counts from 1–80 (All OTU Types) 7-20

7-14 2-Fiber End Terminal (80 Channel OC-192/STM-64) Power Dissipation 7-27

7-15 2-Fiber End Terminal (80 Channel OC-192/STM-64) Current Consumption 7-29

7-16 2-Fiber End Terminal (80 Channel OC-192/STM-64) Power Dissipation 7-30

7-17 2-Fiber End Terminal (80 Channel OC-192/STM-64) System Power Density 7-30

7-18 2-Fiber Ring Terminal (80 Channels OC-192/STM-64) Current Consumption 7-31

7-19 2-Fiber Ring Terminal (80 Channels OC-192/STM-64) Power Dissipation 7-32

7-20 2-Fiber Ring Terminal (80 Channels OC-192/STM-64) System Power Density 7-33

7-21 2-Fiber WAD Type 2 (OC-192/STM-64) Current Consumption 7-34

7-22 2-Fiber WAD Type 2 (OC-192/STM-64) Power Dissipation 7-34

7-23 2-Fiber WAD Terminal Type 2 (OC-192/STM-64) System Power Density 7-35

7-24 2-Fiber Repeater Current Consumption 7-36

7-25 2-Fiber Repeater Power Dissipation 7-36

7-26 OTU1 (2.5 Gb/s Add OTU) C-Band Specifications 7-37

7-27 OTU1L (2.5 Gb/s Add OTU) L-Band Specifications 7-37

7-28 OTUD1 (2.5 Gb/s Drop OTU) Specifications 7-38

7-29 OTU2 (2.5 Gb/s Through OTU) C-Band Specifications 7-38

7-30 OTU2L (2.5 Gb/s Through OTU) L-Band Specifications 7-39

7-31 OTU30 (10 Gb/s Add OTU with Strong FEC) C-Band Specifications 7-39

7-32 OTU30L (10 Gb/s Add OTU with Strong FEC) L-Band Specifications 7-40

7-33 OTUD30 (10 Gb/s Drop OTU with Strong FEC) C-Band Specifications 7-41

7-34 OTUD30 (10 Gb/s Drop OTU with Strong FEC) L-Band Specifications 7-41

7-35 OTU31 (10 Gb/s Through OTU with Strong FEC) C-Band Specifications 7-42

7-36 OTU31 (10 Gb/s Through OTU with Strong FEC) L-Band Specifications 7-42

7-37 OTU40 (HSBB Add OTU) C-Band Specifications 7-43

7-38 OTU40 (HSBB Add OTU) L-Band Specifications 7-44

7-39 OTUD40 (HSBB Drop OTU) Specifications 7-44

7-40 OTU70 Specifications 7-45

7-41 OMU1/OMU2 Specifications 7-45

7-42 OMU1/OMU2 Specifications 7-46

7-43 ODU1C/ODU2C Specifications 7-46

7-44 ODU1C/ODU2C Specifications 7-46

7-45 CLSC Specifications 7-46

7-46 ORS Specifications 7-47

7-47 OA1 Specifications 7-48

7-48 OA1L L-Band Specifications 7-48

7-49 OA3L L-Band Specifications 7-49

7-50 SUPVY1B Specifications 7-49

7-51 SUPVY3 Specifications 7-49

7-52 SUPVY1L Specifications 7-50

7-53 WAD 5-6 Specifications 7-50

7-54 OMON1 Specifications for C-Band 7-51

7-55 OMON1L Specifications for L-Band 7-51

7-56 1.6T OTU1 Output Wavelengths 7-52

7-57 OC-48/STM-16 OTUs (OTU1L) 7-53

7-58 1.6T OTU2 Output Wavelengths 7-54

7-59 OC-48/STM-16 OTUs (OTU2L) 7-55

7-60 1.6T OTU30 Output Wavelengths 7-56

7-61 OC-192/STM-64 OTUs (OTU30L) 7-57

7-62 1.6T OTU31 Output Wavelengths 7-58

7-63 OC-192/STM-64 OTUs (OTU31L) 7-60

7-64 1.6T OTU40 Output Wavelengths 7-60

7-65 HSBB (OTU40L) 7-62

7-66 C-Band DCM Values 7-63

7-67 L-Band DCM Values 7-64

A Optical Spectrum/Channel Information

A-1 50 GHz Spacing OMU Channel Assignment A-2

A-2 50 GHz Spacing L-Band OMU Channel Assignment A-5

A-3 50 GHz Spacing ODU Channel Allocation A-8

A-4 50 GHz Spacing L-Band ODU Channel Assignment A-11

A-5 50 GHz Spacing Wavelength Add/Drop Channel Assignment A-14

A-6 100 GHz Spacing Wavelength Add/Drop Channel Assignment A-14

About this information product

Purpose

This Applications Planning Guide (APG) provides specific information about the features, applications, operations, and engineering of the ***WaveStar® Optical Line System (OLS) 1.6T (400G/800G)***, and covers feature highlights, network applications, and product information.

Reason for reissue

This guide has been issued to provide new information about Release 6.2.

Safety labels

Safety labels for the WaveStar® OLS 1.6T are discussed in the ***WaveStar® OLS 1.6T (400G/800G) User/Service Manual*** (365-575-715R6.2).

Intended audience

This guide is primarily for network planners and designers, technical and customer support teams, and account executives, but it may be used by anyone desiring specific information about the features, applications, operation, and engineering of the WaveStar® OLS 1.6T.

How to use this information product

If you need general product and release information, refer to Chapters 1, 2, and 3. If you need information about applications planning, refer to Chapters 4, 5, 6, and Appendix A. If you need information about engineering a system, refer to Chapters 5 and 7.

This guide is organized as follows:

- Chapter 1, "Introduction" presents a summary description of the system.
- Chapter 2, "Features" describes new and major features of the WaveStar® OLS 1.6T. The features are further described in Chapter 3, System Description.
- Chapter 3, "System Description" describes WaveStar® OLS 1.6T architecture. After a high-level system overview, the system control, physical design, and powering are described down to the circuit pack level.
- Chapter 4, "Applications" describes how the WaveStar® OLS 1.6T meets such diverse needs as point-to-point and two-fiber rings.
- Chapter 5, "System Planning and Engineering" summarizes the descriptive information used with applications information to plan deployment of a WaveStar® OLS 1.6T system.
- Chapter 6, "Bay Configurations" describes the ways that the WaveStar® OLS 1.6T bays may be configured.
- Chapter 7, "Technical Specifications" lists technical specifications for the WaveStar® OLS 1.6T.
- Appendix A, "Optical Spectrum/Channel Information" provides information about the channel allocations for each applicable circuit pack.
- The Glossary defines many terms used in this guide.
- The Index provides easy look-up for key words and subject names.

Conventions used

The following typographical conventions are used within this guide:

- ***Italics*** are used for emphasis
- `Underscoring` indicates hypertext links to information contained in the electronic version of this document.

Related documentation

The *WaveStar® OLS 1.6T APG* is part of a series of documents that support the WaveStar® OLS 1.6T system. Ordering information is

provided on the copyright page. The following documents are included:

Select Code	Document Title
365-575-713R6.2	*WaveStar® OLS 1.6T (400G/800G) Applications Planning Guide*
365-575-714R6.2	*WaveStar® OLS 1.6T (400G/800G) Applications Ordering Guide*
365-575-715R6.2	*WaveStar® OLS 1.6T (400G/800G) User/Service Manual (U/SM)*
365-575-716R6.2	*WaveStar® OLS 1.6T (400G/800G) Operations Systems Engineering Guide*
365-575-717R6.2 (This document may be ordered individually or as part of the 365-575-719R6.2 set below.)	*WaveStar® OLS 1.6T (400G/800G) Installation Manual*
365-575-718R6.2 (This document may be ordered individually or as part of the 365-575-719R6.2 set below.)	*WaveStar® OLS 1.6T (400G/800G) System Turn-up Services (STS)*
365-575-719R6.2 (Includes both the IMS and STS set.)	*WaveStar® OLS 1.6T (400G/800G) Installation Manual and System Turn-up Services*
365-575-793	*WaveStar® OLS 1.6T (400G/800G) Long Single Span Application and Raman Shelf Offering*
C109249029	*WaveStar® OLS 1.6T (400G/800G) Software Release Description*

How to comment

To comment on this information product, go to the Online Comment Form (http://www.lucent-info.com/comments) or email your comments to the Comments Hotline (ctiphotline@lucent.com).

1 Introduction

Overview

Purpose This chapter introduces the WaveStar® OLS 1.6T (400G/800G) and briefly describes highlights of the current release.

Contents

Introduction to the WaveStar® OLS 1.6T	1-2
Laser Safety and Lucent Products	1-5
WaveStar® OLS 1.6T Components	1-6

Introduction to the WaveStar® OLS 1.6T

Overview

The WaveStar® OLS 1.6T is a flexible, high-capacity lightwave system that multiplexes digitally encoded information contained in up to 160 different wavelengths (each at a specifice wavelength), transmits the combined signal through optical fiber, and then demultiplexes the information at the destination.

Release 6.2 builds on previous terabit transmission capabilities and adds several new features, including an enhanced L-Band OA (OA3L) that provides 1.6T capacity on SSMF, OA enhancements, and LambdaRouter Interworking enhancements. Release 6.2 introduces easier navigation within the Craft Interface Terminal (CIT) through a static tree-like directory, enabling a friendlier user interface for tasks involving circuit connections and associations, and a Tasks Toolbar for one-click access to frequently performed operations.

WaveStar® OLS Features

The WaveStar® OLS 1.6T is Lucent Technologies' Dense Wavelength Division Multiplexing (DWDM) transport system, supporting up to 160 wavelengths, and with the Industry's largest capacity for maximum in-service growth. A configuration equipped with a C+L Separator and Combiner (CLSC) supports C-Band and L-Band transmission simultaneously, over a single fiber, with the C-Band and L-Band systems operating as independent systems.

The WaveStar® OLS 1.6T:

- Provides terabit transmission capacity on each deployed fiber using existing, proven OLS technology
- Supports up to 80 data channels of 10 Gb/s signals at 50 GHz channels spacing in the C-band
- Supports up to 80 data channels of 10 Gb/s signals at 50 GHz channels spacing in the L-Band
- Provides a 2 Mb/s supervisory channel that carries control information in each band
- Provides the C+L Separator/Combiner (CLSC) apparatus unit that combines two independent DWDM line systems (one using the C-band, and the other using the L-band) onto a single fiber. Once CLSC is implemented in one of the bands, the other band can be added without disruption of service to customers.

- Provides 1+1 Protection through Optical Channel Path Switching on the C-Band by using Optical Redundancy Switching (ORS)
- Transports data on OC-192/STM-64, OC-48/STM-16, and High Speed Broadband (HSBB) (100 Mb/s–2.5Gb/s) data channels on the same system
- Incorporates a modular design that easily expands with growth requirements
- Provides dispersion compensation to maximize transmission distance
- Provides an open interface by using Optical Translator Units (OTUs), including the 4:1 10G Multiplexing OTU, to terminal equipment
- Supports a variety of applications, including point-to-point and rings
- Supports Automatic Power ShutDown (APSD) to prevent accidental exposure to unterminated optical fibers

WaveStar® OLS 1.6T C-Band + L-Band Operation

The OLS system can be configured in multiple ways that meet the diverse needs of communication service providers through multiple configurable systems. Three configurations are available to communications service providers: the WaveStar® OLS 1.6T, the WaveStar® OLS 800G, and the WaveStar® OLS 400G. All three provide higher capacity per fiber over longer distances than previously possible. As illustrated in Chapter 4, “Applications” , each of the configurations can provide any of the following applications:

- End-to-end
- End-to-end with Repeater(s)
- End-to-end with Repeater(s) and Wavelength Add/Drop
- Ring
- Ring with Repeater(s)
- Ring with Repeater(s) and Wavelength Add/Drop

Start-up costs and growth issues are addressed in the WaveStar® OLS modular design. Customers can purchase a cost-effective customized system that satisfies current network needs and expands to meet future network needs. With in-service upgrades, the WaveStar® OLS 1.6T expands to bring additional service capacity without affecting existing service, and all within the smallest footprint of the industry.

WaveStar® OLS 400G/800G C-Band or L-Band Operation

The WaveStar® OLS 400G/800G is designed to provide high capacity DWDM transport over various fiber types. By design, the OLS 400G/800G can be configured for a single bay or grow up to 12 bays. Engineering Rules support all fiber types in the C-Band and the L-Band, and support a variety of client signal data rates. The Wave Star® OLS 400G/800G architecture builds on the proven, reliable experience gained in Lucent Technologies' prior-generation OLS products.

WaveStar® OLS Benefits

The modular design of the WaveStar® OLS 1.6T helps you plan for future transport needs while delivering an immediate increase in network capacity. It allows for more economical growth plans, whether by adding more wavelengths or adding more spans. Additionally, the WaveStar® OLS 1.6T provides the following benefits:

- Handles more capacity on a single fiber
- Supports a variety of topologies
- Is bit-rate independent
- Provides capabilities for performance monitoring, fault isolation, and maintenance
- Interfaces flexibly with Lucent equipment, other vendors' equipment, and the existing fiber plant
- Provides transport of signal channels at the following data rates: OC-192/STM-64, OC-48/STM-16, and broadband signals within the 100 Mb/s to 2.5Gb/s range
- Allows in-service upgrades that enhance services without interrupting service
- Permits WaveStar® OLS 1.6T access to all channels on the fiber ring
- Supports previous hardware configurations
- Resides inside the Industry's ***smallest*** footprint

Chapter 2, "Features", briefly describes the qualities that help create the dynamic, scalable WaveStar® OLS 1.6T.

□

Laser Safety and Lucent Products

Safety Policy

Lucent is committed to design optical fiber transmission equipment that minimizes operator and service personnel exposure to potentially hazardous levels of optical energy during service and operation. However, the continued safe use of optical transmission, optical cables and passive optical connection equipment requires a partnership with customers to assure that these systems are deployed and maintained in a safe manner. While automatic laser power reduction systems in Lucent's higher power transmission equipment respond quickly to reduce laser emissions to safe levels in the event of a fiber disconnection or break, network operators must take proper action in the event of an alarm. In a typical network, our optical cables and passive optical connection equipment can carry signals from various vendor sources that may have different degrees of safety controls. We urge our customers to properly assess the power of these sources to ensure that their safety controls are adequate.

To strengthen our partnership and to assure the continued safe deployment and use of optical networks, we urge you to use the following standards as your guides for laser safety for your customers and employees:

In the US:

- ***ANSI Z136.1 - American National Standard for Safe Use of Lasers***, and
- ***ANSI Z136.2 - American National Standard for Safe Use of Optical Fiber Communication Systems Utilizing Laser Diode and LED Sources***

Elsewhere:

- ***IEC 60825 Safety of Laser Products Part 1: Equipment classification, requirements, and user's guide***, and
- ***IEC 60825 Safety of Laser Products Part 2: Safety of optical fiber communication systems***

□

WaveStar® OLS 1.6T Components

Diagram of a Typical System

As a DWDM product, the WaveStar® OLS 1.6T is designed for flexibility, modularity, and for maximum capacity. Components reside within a modular framework, and all WaveStar® OLS 1.6T signal wavelengths are on the ITU grid. Figure 1-1 shows a basic transmission system in the C-Band without 1+1 Protection. For illustration purposes, the L-Band system is not shown, however, it is a mirror image of Figure 1-1.

Figure 1-1 Typical 2-Fiber WaveStar® OLS 1.6T

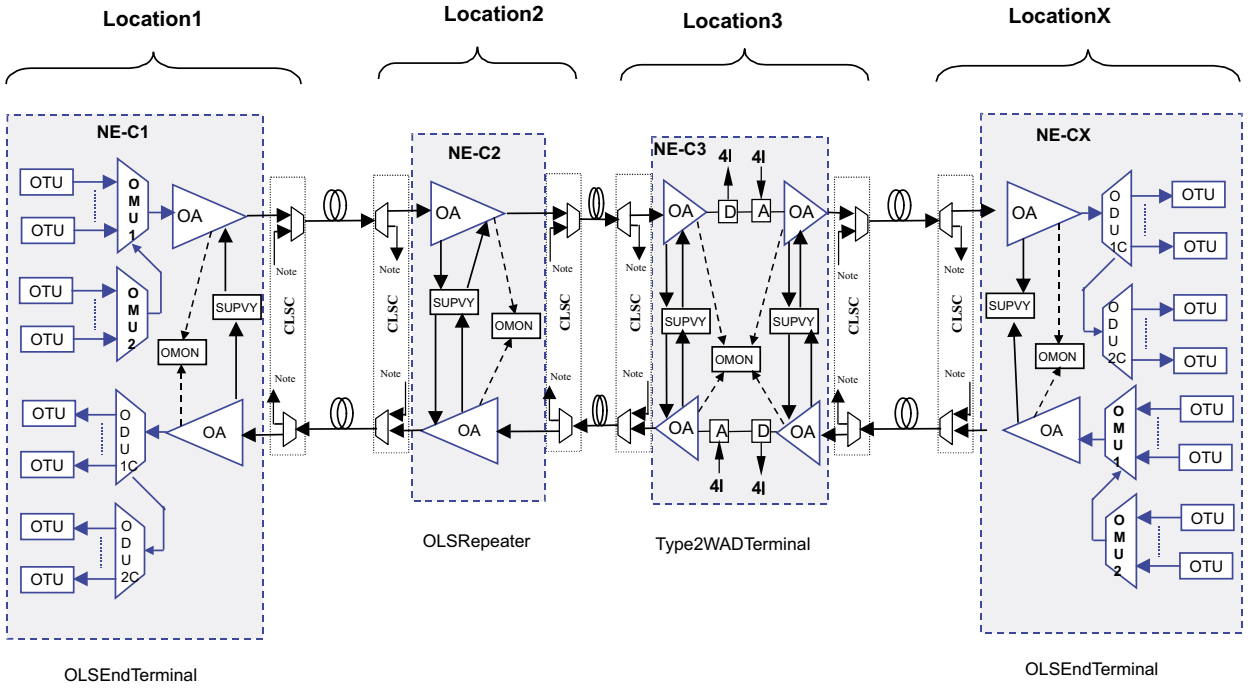

OTU

OTUs (Optical Translator Units) translate incoming optical signals to wavelengths that are compatible with the OLS. They are also used when signal regeneration is desired (i.e., when concatenating multiple WaveStar® OLS 1.6T systems for longer reach).

Each OTU circuit pack supports two channels where each channel is a separate wavelength.

OMU and ODU When equipped with a single OMU1/ODU1C (Optical Multiplexing Unit/Optical Demultiplexing Unit) pair, the WaveStar® OLS 1.6T supports up to 40 channel applications. When equipped with two OMUs and two ODUs in each band (C-Band and L-Band), the WaveStar® OLS 1.6T supports up to 160 channels.

OA The Optical Amplifier (OA) provides a constant per-channel gain across the optical spectrum supported by the WaveStar® OLS 1.6T system (i.e., 1530–1562 nm for C-Band and 1574–1610 nm for L-Band).

CLSC The C+L Separator/Combiner (CLSC) units support C-Band plus L-Band transmission simultaneously over a single fiber. To allow in-service transmission capacity expansion from 800Gb/s to 1.6Tb/s, the CLSC must be installed in the initial deployment.

OMON The Optical Monitor (OMON) circuit packs perform Optical Spectrum Analysis and are designed to scan the spectrum, both C-band and L-Band.

WAD Type 2 The Wavelength Add/Drop (WAD) Type 2 circuit packs WAD5 and WAD6 allow four fixed wavelength channels to be dropped or added at WAD sites. OTUs on through channels are not required.

SUPVY The Supervisory (SUPVY) circuit pack facilitates communications between WaveStar® OLS 1.6T Network Elements for system maintenance, and performance monitoring via a 2 Mb/s supervisory channel.

BOS The Bay, Overhead, and System (BOS) circuit pack monitors and controls operation of the Wavestar® OLS 1.6T.

EI The External Interface (EI) circuit pack supports the CIT User Interface to the WaveStar® OLS 1.6T.

DCM The Dispersion Compensation Module (DCM) compensates for the chromatic dispersion of the transmission fiber.

□

2 Features

Overview

Purpose

This chapter provides information on new features and enhancements in Release 6.2 of the WaveStar® OLS 1.6T, as well as standard system features and functionality.

Contents

Release 6.2 System Features	2-2
Highlights of Release 6.2	2-3
WaveStar® OLS 1.6T Standard Features	2-5
Information on Prior Releases	2-15
Maintenance Capabilities	2-16

Release 6.2 System Features

New Features

Release 6.2 of the WaveStar® OLS builds on the transmission capacity of the 1.6 Tb/s product, and offers the following new features:

- An enhanced L-Band OA (OA3L) that supports 1.6T capacity on SSMF
- APSD autonomous notifications
- OA power enhancement
- SDH Performance Monitoring parameters
- LambdaRouter interworking enhancements
- Craft Interface Terminal (CIT) enrichment
- In-service Software Upgrades from Releases 6.0, 6.0.1, and 6.1

□

Highlights of Release 6.2

OA3L This L-Band OA (when deployed with the 800G C-Band OA) allows you to achieve 1.6T capacity over SSMF using Release 6.0 Engineering Rules, empowering your system to transmit C-Band and L-Band signals simultaneously over a single fiber. Releases 6.0, 6.0.1, and 6.1 provided 1.6T capacity for all other fiber types.

APSD The existing APSD design is enhanced to alert you to NE conditions during which APSD is unavailable. This feature includes autonomous messages that indicate APSD is unavailable during system reboots and when specific TL1 commands are executed.

CIT Enhancements Release 6.2 of the WaveStar® OLS 1.6T brings new functionality to the CIT and reduces the amount of navigation required for both PC and laptop users. The new graphical user interface supports:

- A permanent NE Equipment Explorer, which provides the user with an tree-type directory that automatically maps to a virtual view of the system (bay, shelf, slot, port)
- An improved System View that provides the Equipment Explorer in a left-hand pane and a virtual view of your system in a right-hand pane
- Right-click functionality for both the NE Equipment Explorer and the components of the virtual view, allowing you to view details or perform provisioning tasks with one-click access.
- A Task Toolbar that allows quick access to frequently performed tasks via easily identified graphical icons
- A reorganization of submenus and pop-up screens that creates faster access to the desired tasks
- Keyboard access (short-cut keys) that provide navigation aid and convenient entry to menu items
- New functional graphical elements that allow right-click access to Alarm Status at any time, and a graphical element that allows you one-click access to the system heirarchy

SDH Performance Monitoring

The WaveStar® OLS 1.6T system can be user-provisioned for either SONET or SDH Performance Monitoring, and provides non-intrusive monitoring of the B1 byte in the SONET/SDH section overhead. SDH parameters are defined through ITU-T G.828.

LambdaRouter Interworking Enhancements

This enhancement enables you to restore a single failed link without resorting to end-to-end path restoration. This feature is supported with the OC-192 B-coded OTUs and the 4:1 MUX OTU.

In-service Software Upgrades

In-service Software Upgrades from Releases 6.0, 6.0.1 and 6.1 are supported.

□

WaveStar® OLS 1.6T Standard Features

1.6Tb/s

Release 6.2 continues the Release 6.0 support for additional 800G capacity in the L-band. With a Release 5.0 OLS configured as ″1.6T-Ready″ providing 800G capacity in the C-Band and equipped with the C+L Separator and Combiner (CLSC), C-Band and L-Band transmissions occur simultaneously over a single fiber. The C-Band and L-Band systems operate as two independent systems.

4:1 10G Multiplexing OTU

The bi-directional 10G Multiplexing (MUX) Optical Translator Unit (OTU) multiplexes four incoming OC-48/STM-16 wavelengths into one high-speed OCh 10G wavelength. In the opposite direction, the same 4:1 10G MUX OTU de-multiplexes an incoming OCh 10G signal into the four original client OC-48/STM-16 signals. As with other OC-192/STM-64 OTUs, the 4:1 10G MUX OTU features a digital wrapper with out-of-band FEC. This OTU is currently supported in the C-Band.

1+1 Optical Channel Path Switching

The individual signal channels can be protected within 60 ms with this feature. Unidirectional and non-revertive, 1+1 Channel Protection Path Switching protects against channel failures and fiber cuts. This feature eliminates the SONET multiplexing layer in IP Router and ATM applications. An ORS circuit pack provides 1+1 Optical Channel Path Switching.

Partial Topology

This feature allows transmission prior to the establishment of a Ring Map. This enhancement allows the end terminal to communicate with one repeater at a time, confirming that each part of the network is transmitting data as the network is being deployed. Partial Topology facilitates testing procedures, for example, between an End Terminal and a Ring Terminal.

Additional Capabilities

The following capabilities are also available.

- TL1 interface to SNMS
- Windows 2000 interface for CIT applications

Transmission OTU Rates

The WaveStar® OLS 1.6T supports three different OTUs to handle signal rates between 100 Mb/s and 10 Gb/s

- OC-192/STM-64 FEC - The product accepts OC-192/STM-64 signals from the client with or without Forward Error Correction (FEC). With WaveWrapper technology, the system provides out-of-band strong FEC to support full capacity systems over longer transmission distances before regenerating the signal.
- OC-48/STM-16 - The product accepts OC-48/STM-16 signals from the client to support 2.5 Gb/s per channel.
- HSBB - The WaveStar® OLS 1.6T supports rates from 100 MB/s to 2.5 GB/s. The High-Speed Broadband Optical Translator Unit (HSBB OTU) translates incoming wavelengths into those compatible with the OLS 1.6T. The HSBB OTU is capable of handling SONET/SDH and other asynchronous optical signals within the broadband range. It provides Regeneration, Retiming, and Reshaping (3R) for SONET/SDH signals and Gigabit Ethernet. It provides 2R Regeneration for all other signals between 100 MB/s and 2.5 GB/s. The HSBB OTU provides an economical optical interface by replacing multiple speed-specific OTUs.

Through OTUs

The WaveStar® OLS 1.6T supports pass-through signals between back-to-back OLS 1.6T End Terminals and through the OLS 1.6T Full Add/Drop Ring Terminal with the Through OTU. This feature saves equipment cost and central office floor space. Use of the Through OTU in both types of applications is shown in the figure below.

Figure 2-1 Through OTU Applications in Back-to-Back End Terminals and Full Add/Drop Ring Terminals

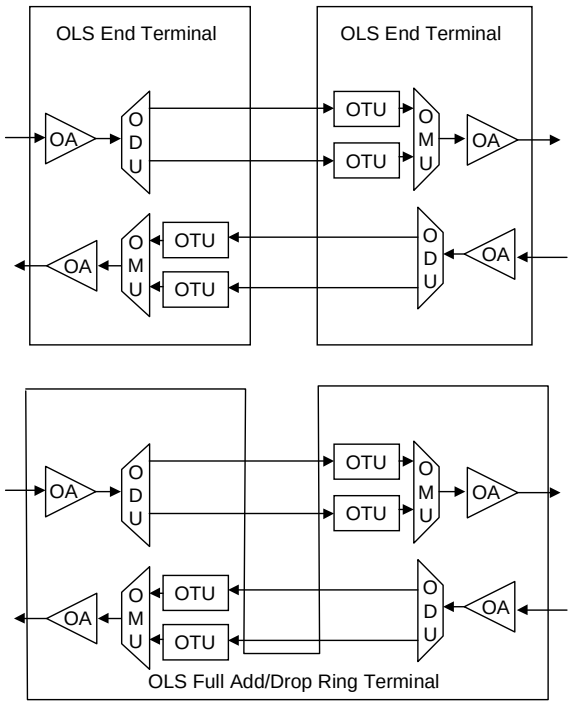

C+L Separator/Combiner (CLSC)

The C+L Separator/Combiner (CLSC) apparatus unit combines two independent DWDM line systems (one using the C-band, and the other using the L-band) onto a single fiber. This unit allows C-Band or L-band capabilities to be added to the system in the future without disruption of service to customers. In transmission paths, Single C+L Separator and Combiner (CLSC-S) and Double C+L Separator and Combiner (CLSC-D) apparatus units are used for C+L applications. CLSC-S is used in terminal systems (end terminals and ring terminals) and WAD terminals. CLSC-D is used in repeater sites.

Flexible Engineering Rules

Engineering Rules have been expanded to cover both C-Band and L-Band 800G configurations and 1.6 Tb/s Ready configurations that allow in-service addition of L-band transmission in Release 6.0. Configurations of up to 12 spans with an up to 1000 km reach supported, as are Engineering Rules for dispersion shifted fiber.

Long Single-Span Operation

The WaveStar® OLS 1.6T supports:

- A single span distance of a 37 dB maximum
- A maximum of 16 channels of up to OC-192/STM-64

Wavelength Add/Drop Type 2

The WaveStar® OLS 1.6T supports a WAD Type 2 with a 4-Channel Add/Drop. All signal types are supported and the same or different wavelengths may be added/dropped on either side of the node.

WAD5 and WAD6 are used for OC-192/STM-64 applications and OC-48/STM-16 applications. WAD Type 1 circuit packs are no longer supported.

OLS Compatible Optics

By equipping OLS compatible optics on other Lucent TDM terminals, such as the WaveStar® ADM 16/1, BWM, and UNITE, optical translation is not required, and the TDM terminal and the OLS 1.6T can be connected without the use of an OTU. This capability saves equipment cost and central office floor space.

Figure 2-2 shows a simplified block diagram that illustrates the use of OLS compatible optics.

Figure 2-2 OLS Compatible Optics - Block Diagram

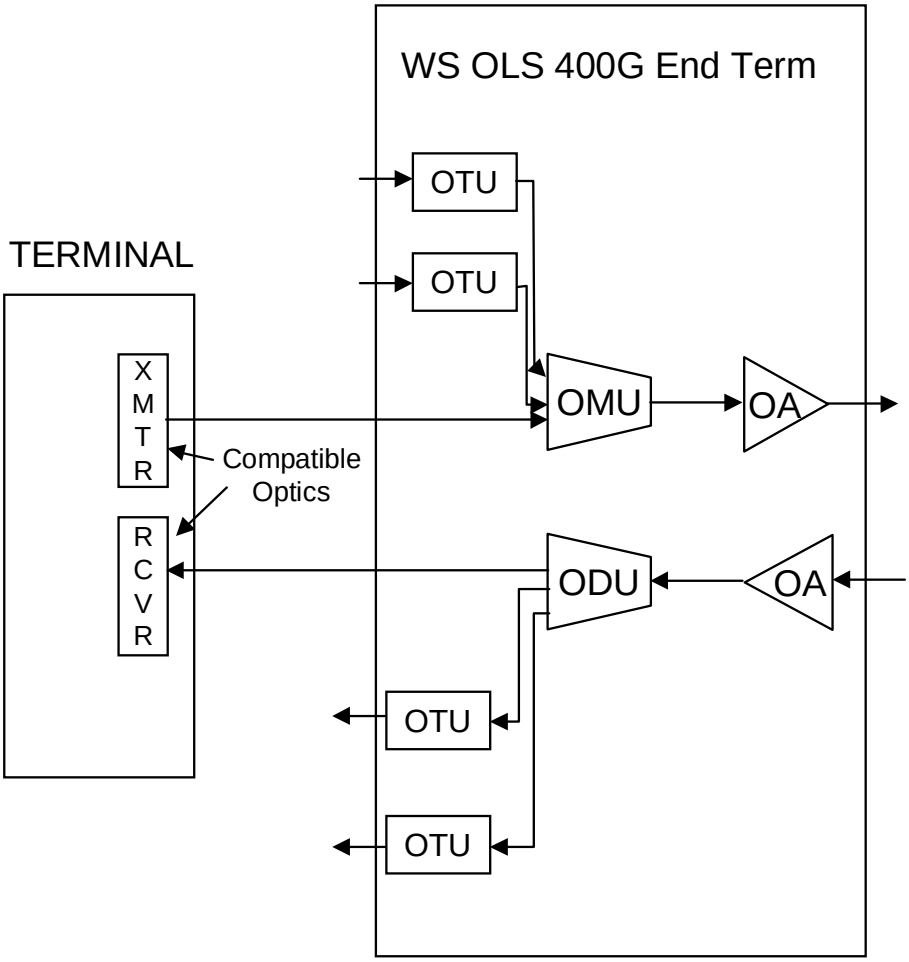

Channel Trace via WaveWrapper

With the WaveWrapper technology, the WaveStar® OLS 1.6T supports advanced network management capabilities by precisely tracking each optical channel through the entire OLS network. The channel trace capability uniquely identifies each optical channel (wavelength). As a wavelength traverses through one or more OLS systems, the optical channel identification information can be accessed at any OTU in its path. This feature provides more comprehensive system maintenance and network management.

The WaveStar® OLS 1.6T:

- Supports optical channel identification for Wave Wrapper OTUs (for example, OTU30 and OTU31)
- Supports independent channel trace per wavelength on all channels simultaneously
- Supports optical channel identification carried over OTUs between concatenated WaveStar® OLS 1.6T systems

Quick Transmission Restoration After Power Loss

The WaveStar® OLS 1.6T optionally restores transmission within approximately five minutes after short power failures (not more than two minutes maximum duration). This feature enables transmission while the network element is still undergoing boot process.

Optical Span Loss Measurement

The WaveStar® OLS 1.6T allows you to retrieve the value in decibels of the span loss incurred between two adjacent nodes. The span loss is determined for both directions of the transmission for a line. Accessed through the Craft Interface Terminal (CIT), the user selects the Target Identifiers (TIDs) for the two adjacent nodes of interest and a Line Build Out (LBO) value for each transmit LBO. The valid values for the TIDs and LBOs are provided in drop-down lists for each field. A default login and password are used to access the nodes. If either node rejects the default login and password, a pop-up login and password screen displays which prompts the user to enter and send a valid login and password. This pop-up screen displays the TID of the node in which the login or password failed.

The span loss is calculated as follows: Span Loss = Tx - LBOtx - Rx, where:

- Tx is the transmit OA power in dBm
- LBOtx is the transmit LBO value in dB
- Rx is the receive OA power in dBm

IP Address Translation

The WaveStar® OLS 1.6T accepts and forwards the IP packets that contain Private Class A IP addresses of Net 10 (Standard 10.0.0.0) in the source and/or destination fields of the IP header for communication with the OS port.

User-provisionable via a TL1 command, the WaveStar® OLS 1.6T can use any of the Private Class A Net 10 IP addresses and maps the provisioned Class A Net 10 IP address to avoid any internal routing conflict within the NE. For incoming packets, the WaveStar® OLS

1.6T maps the destination address of the IP header to a translated internal IP address (for example, from 10.64.5.1 to 30.64.5.1). Likewise, IP packets on the return path go through the reverse address translations (for example, from 30.64.5.1 to 10.64.5.1) before the IP packet is forwarded to the OS.

SNMP Mediation Device

Full integration between the WaveStar® OLS 1.6T and SNMP-based network management system is achieved through a Mediation Device (MD). The MD converts TL1 alarms received from the OLS to SNMP messages, and allows SNMP-based network management systems to manage both WaveStar® OLS 1.6T and IP equipment. A simple interface allows the user to administer the MD, display TL1 alarms and events, and maintain a log file of messages sent and received. The MD is an Intel-based PC that runs Microsoft Windows NT 4.0. To set up the MD, a customer will need to purchase from Lucent a CD-ROM loaded with SNMP Mediation Device software and user documentation. The customer will then load the software on a commercial PC with the configuration specified by Lucent.

WaveStar® OLS 1.6T CIT

The WaveStar® OLS 1.6T CIT is a PC-based application that provides a sophisticated graphical user interface (GUI). In Release 6.2, the CIT is enhanced to provide an enriched operating environment, with reorganized sub-menus, short-cut keys, a static NE Equipment Explorer tree, improved graphics in the virtual view, one-click access to frequently performed tasks and alarm status, and a new and improved overall look. The WaveStar® OLS 1.6T CIT features are listed below.

- Auto-Discovery — The CIT can automatically determine all WaveStar® OLS 1.6T nodes on a LAN as well as in an OLS 1.6T span. Auto-discovery of the OLS 1.6T node that is directly connected to the CIT is also supported. Discovered information can be stored in a network view for future use, providing an ease-of-use approach.
- Autonomous Message Update at CIT — The WaveStar® OLS 1.6T CIT is able to automatically update its alarm and equipment information based on the autonomous messages from the OLS. This keeps the CIT synchronized with the OLS, and provides users with the current state of the system.

- LAN Connection from CIT to NE — WaveStar® OLS 1.6T includes the ability to connect to an intra-office LAN (IAOLAN), which permits access to multiple NEs on the same LAN from a single CIT.
- Remote Access from CIT to NE — WaveStar® OLS 1.6T allows users to connect the WaveStar® OLS 1.6T CIT to the OLS 1.6T system from a remote location. A LAN connection is used from a location such as a Network Operations Center. Dial-up access is used where there is no physical LAN connection.
- PC Operating System — WaveStar® OLS 1.6T supports Microsoft Windows 2000/95/98 and Windows NT v4 operating systems.
- NE-Type Specific CIT Menus — WaveStar® OLS 1.6T displays appropriate menus for each NE type.

System Security

From Release 6.0 forward, the WaveStar® OLS 1.6T supports the establishment of user login session associations with TL1 OSs using both the super and/or non-super user logins. The CIT-NE interface, OS-NE interface, and the data communication network (DCN) between the NEs can be used for remote access from an OS via a local/gateway NE. User logins with the appropriate security administration privilege can be used by the OSs to log onto the NE to support the management of the user logins. User login security provides the capability to control access to the network element by individual users, while network element login security provides the capability to control access on a per network element basis by inhibiting non-super users from logging into the network element. The WaveStar® OLS 1.6T supports multiple user logins at the WaveStar® OLS 1.6T CIT Terminal. The following functional categories are supported:

- System and Security Administration
- Test Access
- System Maintenance
- Provisioning
- Performance Monitoring
- Backups
- Restorations

SUPVY Channel

The WaveStar® OLS 1.6T provides a supervisory channel that supports a 2 Mb/s data signal. Two Supervisory Data Links are provided for message-based system control between Network Elements. Three Orderwire circuits are supported.

- One data link connects to every NE within the system.
- Each NE can be provisioned to terminate the express data link.

Interface to EMS

Lucent Technologies SubNetwork Management System (SNMS) R4.2/5.0/5.1 is used to provide the Element Management System (EMS) function in support of the WaveStar® OLS 1.6T transmission network. The WaveStar® OLS 1.6T system interfaces with the SNMS via TL1. Refer to the WaveStar® OLS 1.6T SNMS User Guide for more information about SNMS.

Additional Capabilities

The following capabilities are also available:

- Gateway Network Element (GNE) Operations—Any non-Repeater WaveStar® OLS 1.6T NE may be connected to the OS and act as a GNE. The WaveStar OLS then routes OS messages using the interface protocol stack over the Supervisory Data Link.
- Physical and Environmental Standards Compliant—The WaveStar® OLS 1.6T meets or exceeds the following physical and/or environmental standards:
  - NEBS-compliant except for shelf depth
  - Shelf width and height compliant with ETSI standards (600 mm deep)
  - Total Bay depth less than or equal to 14 in (355 mm)
  - Conforms to NEBS, ETSI, UL, CSA, and CE Mark
  - FCC compliant for electromagnetic compatibility (EMC), and International Electrotechnology Commission (IEC) compliant for electrostatic discharge (ESD)
- Cooling—The WaveStar® OLS 1.6T operates without requiring fans at repeater sites. Cooling fans are included in bays for End Terminals, Ring Terminals, and WAD Terminals.
- Visual Indicators—The WaveStar® OLS 1.6T provides two LED indicators on each circuit pack–one labeled ***Fault***, and the other labeled ***Active***.

- User Interface—The WaveStar® OLS 1.6T includes the following user interfaces:
  - Manual Reset (Restart) Switch—The WaveStar® OLS 1.6T provides a front-panel switch used to reset the system.
  - SONET indicators showing critical (CR), major (MJ), and minor (MN) alarms, abnormal conditions (ABN), and near-end activity (NE-ACTY)
  - SDH indicators showing prompt (PROMPT), and deferred (DEFERRED) alarms, abnormal conditions (ABN), and Info-N (INFO-N)
  - WaveStar® OLS 1.6T CIT connection with an alarm cut-off (ACO) button that silences audible office alarms when pressed and lights up during suppression of the alarm

□

Information on Prior Releases

Support of Prior Releases

Prior Release 6.0 is supported. Documentation for supported products can be ordered through the Lucent Customer Care (1-888-LUCENT8). Ordering information is also provided on the copyright page of this document.

Features No Longer Supported

Release 6.2 supports 2-fiber applications only. Circuit packs for Wavelength Add/Drop (WAD) Type 1 (WADs 1- 4) are no longer supported. If your system uses any of these circuit packs, please contact Lucent Customer Care (1-888-LUCENT8) to determine a plan of action.

Upgrade Notes

Releases 6.0, 6.1, and 6.0.1 can be upgraded in-service to Release 6.2. Supported SNMS upgrades are R7.0, R8.0, and R9.0.

□

Maintenance Capabilities

Equipment Maintenance

The WaveStar® OLS 1.6T continuously monitors the system equipment. If problems or failures occur, alarms are raised by the system to notify the user. These alarms are reported against specific locations in the equipment to isolate the fault. The following features are enhanced capabilities of the equipment maintenance:

Alarm Provisioning

The WaveStar® OLS 1.6T provides enhanced system monitoring capabilities by providing the flexibility to assign the alarm severity associated with any alarm or status condition indicated by the system. The provisioning capability is supported by the WaveStar® OLS 1.6T CIT and the EMS.

Local Not-In-Service Indication

The WaveStar® OLS 1.6T assists service providers in reducing the possibility of service outages by allowing the network operator to indicate whether an OLS transmission circuit pack is currently carrying active service traffic. This indication informs the field personnel that it is safe to perform maintenance activities on an optical line.

Airflow Alarm

The WaveStar® OLS 1.6T supports an airflow alarm. The equipment detects when dust filters become clogged. This gives the operator the opportunity to replace the dust filters well before any problems occur in cooling the equipment.

Database

The WaveStar® OLS 1.6T allows manual and automatic aborting of a database backup activity. This could be used for example when a software update is applied. The WaveStar® OLS 1.6T will verify that the correct database is downloaded to the correct Network Element (NE).

Automatic Fault Recovery

The WaveStar® OLS 1.6T will automatically recover from power faults or hits, to restore the system to the state it was in before the failure occurred.

Optical Channel Alarm Indication Message

The WaveStar® OLS 1.6T uses an alarm indication message via the Supervisory Channel to notify downstream equipment when an optical channel Loss of Signal is detected. This is used in alarm correlation to report the most upstream alarm in a line system.

Signal Maintenance

The OLS will continuously monitor all the signals that are carried through the line system. It will monitor such defects such as Loss of Signal (LOS) and Loss of Frame (LOF). The OLS 1.6T will also take appropriate action to signal defects such as inserting an Alarm Indication Signal (AIS) or shutting off the LASER at the drop OTU. Below are enhanced capabilities of the signal maintenance.

OTU AIS Response Provisioning

The WaveStar® OLS 1.6T supports the provisioning of the response to incoming AIS-L on the OC-48/STM-16 Drop OTU. The OC-48/STM-16 OTU can be provisioned to pass the AIS-L signal on or it can be provisioned to shut down the output power when AIS-L is detected on the input port.

Optical Amplifier Monitor Port

The Optical Amplifier (OA) includes Optical Signal Monitor Taps on both its receive input and transmit output to monitor the optical signal.

B1 Byte Monitoring

The WaveStar OLS 1.6T supports non-intrusive monitoring of the B1 byte for OC-48/STM-16 and OC-192/STM-64 signals. For SONET, the CV-S, ES-S, SES-S, SEFS-S, FEC-EC, and FEC-UBC parameters are supported. For SDH, the BBE, ES-S, SES-S, UAS, FEC-EC, and FEC-UBC parameters are supported. Thresholds for these parameters may be set by the user. Autonomous messages can be sent when the thresholds for the parameters are crossed if provisioned to do so by the user.

J0 Byte Section Trace Identifier

The WaveStar® OLS 1.6T can read the J0 Section Trace Identifier for OC-48/STM-16 and OC-192/STM-64 signals. The Trace Identifier is compared to the user-provisioned expected trace identifier to ensure proper connectivity. A J0 mismatch alarm is raised against the port where the mismatch is detected.

User-provisioned J0 Section Trace 16-byte format (for tracing, reading, and comparing) and 64-byte format (reading only) is supported. This capability is applicable for each of the four input ports in the source direction and each of the four output ports in the sink direction on a per-port basis. For the 16-byte format only, the J0 Section Trace string (STI) is provisionable, and comparison is made between the received and the expected J0 Section Trace string. The WaveStar® OLS 1.6T supports user-provisioned OCh WaveWrapper Path Trace Identifier (OJ3) mismatch detection in the sink direction of the 4:1 10G MUX, and health check is supported for LambdaRouter Interworking. Tone-trace is supported on the 4:1 10G MUX to allow user to operate and release tone trace on the line side output port of the 4:1 10G MUX.

□

3 System Description

Overview

Purpose This chapter provides system description information on terminals, transmission and control circuit packs, and power.

Contents

System Overview	3-3
Functional Theory of Operation	3-4
System Components	3-6
Terminals	3-7
End Terminal	3-8
Full Add/Drop Ring Terminal	3-9
Repeater	3-10
2-Fiber Wavelength Add/Drop (WAD Type 2)	3-11
Transmission Circuit Packs	3-12
Optical Translator Unit (OTU)	3-13
4:1 10G Multiplexing (MUX) OTU (OTU70)	3-15
Optical Multiplexer Unit (OMU)	3-17
Optical Amplifier (OA)	3-20
Dispersion Compensation Module (DCM)	3-22
Wavelength Add/Drop Type 2 (WAD5/6)	3-23

Optical Demultiplexer Unit (ODU)	3-26
CLSC	3-29
Optical Redundancy Switching (ORS)	3-32
Control Circuit Packs	3-34
Optical MONitor (OMON)	3-35
Supervisory Circuit Pack (SUPVY)	3-38
Bay, Overhead, and System (BOS) Controller	3-41
External Interface (EI)	3-43
Power	3-46
Power Cables	3-47
Power Distribution for a System Bay	3-48
Power Distribution for a Complementary Bay	3-49
Power Distribution for a Growth Bay	3-50
Power Distribution for a Miscellaneously Mounted 2-Fiber Repeater Shelf	3-51
Circuit Pack Power Distribution	3-52
PC Requirements	3-53

System Overview

Overview

Purpose This section provides information on the functional theory of various operations and on the system components.

□

Functional Theory of Operation

Simplified Block Diagram

As shown in Figure 3-1, Release 6.2 is a C-Band and/or L-Band offering. Note that the C+L Separator/Combiner (CLSC) is used to combine the C-Band and L-Band traffic onto one fiber. The CLSC is deployed at the initial installation to allow in-service expansion to 1.6T transmission service.

The C-Band system is shown below. For illustration purposes, the L-Band system, a mirror image of the C-Band, is not shown.

Figure 3-1 WaveStar® OLS 1.6T OLS Simplified Block Diagram

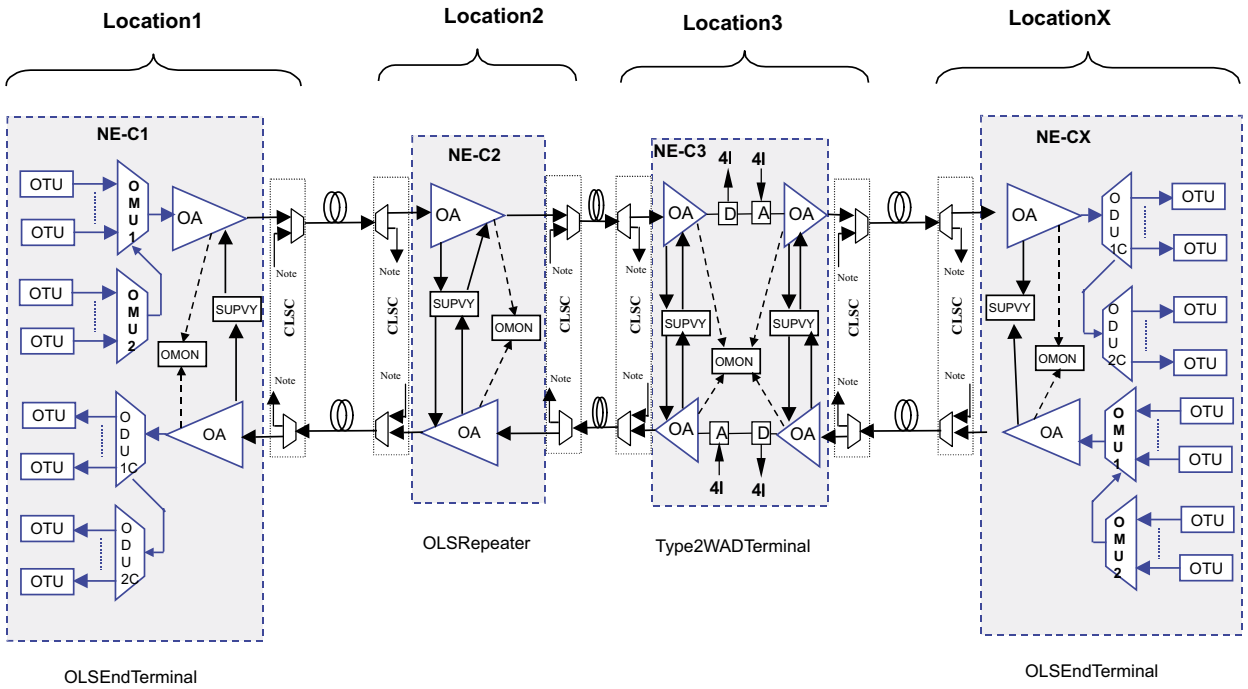

Transmit Direction

In the transmit direction in either band, a WaveStar® OLS 1.6T End Terminal:

- Combines up to 80 optical wavelengths onto a common optical fiber (performed by the OMUs) on each band for a total of up to 160 optical wavelengths.
- Monitors the power of each optical signal in the OA (performed by the OMON)
- Amplifies the optical signal (performed by the OA)

- Couples the supervisory signal into the optical line signal (performed by OA)
- Combines the output of the C-Band OA with the output of an L-Band system OA via an optional C+L Separator/Combiner (CLSC) onto a common transmission fiber

WAD Sites

The WaveStar® OLS 1.6T features the 2-Fiber 4-Channel WAD Type 2, which can add/drop up to four optical channels. In the transmit direction, the WAD Type 2:

- Adds and drops up to 4 specific wavelengths.
- Channels that are dropped exit before the added channels are inserted on the line. Therefore, the added and dropped channels may use the same or different wavelengths.

Repeater Site

In the transmit direction, a WaveStar® OLS 1.6T Repeater terminal:

- Amplifies all transmitted optical channels
- Receives the optical line signal from the optical line and separates the C-Band channels and supervisory channel from the L-Band channels and supervisory channel using the CLSC apparatus.

One Repeater Shelf is needed for each band.

Receive Direction

In the receive direction, a WaveStar® OLS 1.6T End Terminal:

- Receives the optical line signal from the optical line and separates the C-Band channels and supervisory channel from the L-Band channels and supervisory channels using the CLSC apparatus.
- Decouples the Supervisory signal from the optical line, which is then fed to the Supervisory Circuit Pack (SUPVY) (performed by the OA).
- Monitors the received power of each optical channel and the total received optical power (performed by the OMON).
- Receives the low level optical line signal from the optical line and amplifies it (performed by the OA).
- Demultiplexes up to 80 optical wavelengths (performed by the ODUs).

□

System Components

Terminals, Circuit Packs, and CLSC

The WaveStar® OLS 1.6T NEs are equipped with the following appropriate system components:

- Transmission Circuit Packs
  - Optical Translator Unit (OTU)
  - Optical Multiplexer Unit (OMU)
  - Optical Amplifier (OA)
  - Dispersion Compensation Module (DCM)
  - Wavelength Add/Drop (WAD)
  - Optical Demultiplexer Unit (ODU)
  - Optical Redundancy Switch (ORS)
- C + L Separator/Combiner (CLSC)
- Control Circuit Packs
  - Optical Monitor (OMON)
  - Supervisory Pack (SUPVY)
  - Bay, Overhead, and System (BOS)
  - External Interface (EI) Circuit Packs

In addition to the above discrete circuit packs, the Power System is an integral component of the WaveStar® OLS 1.6T.

□

Terminals

Overview

Purpose This section provides information on Network Element types: end terminals, fixed add/drop ring terminals, full add/drop ring terminals, and repeater terminals.

□

End Terminal

Description An End Terminal is used at the transmit and receive ends of a point-to-point application. It contains functionality that interfaces the optical signal between the WaveStar® OLS 1.6T and other network elements, multiplex and demultiplex capabilities, and the ability to amplify the incoming signal.

Block Diagram Figure 3–2 shows a simplified block diagram for a typical 2-Fiber End Terminal application.

Figure 3-2 2-Fiber End Terminal Application

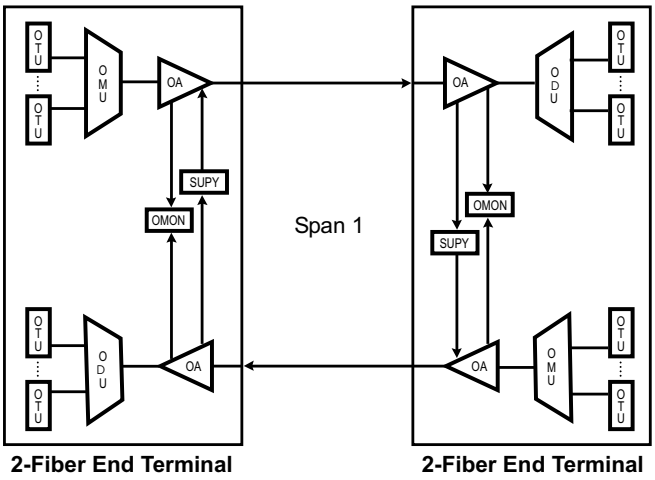

Full Add/Drop Ring Terminal

Description A Full Add/Drop Ring Terminal is typically used in Ring Applications where all transmitted wavelengths can be added and dropped at a single node of an optical network.

Block Diagram Figure 3-3, “2-Fiber Full Add/Drop Application” (3-9) illustrates a simplified block diagram for a typical 2-Fiber Full Add/Drop application.

Figure 3-3 2-Fiber Full Add/Drop Application

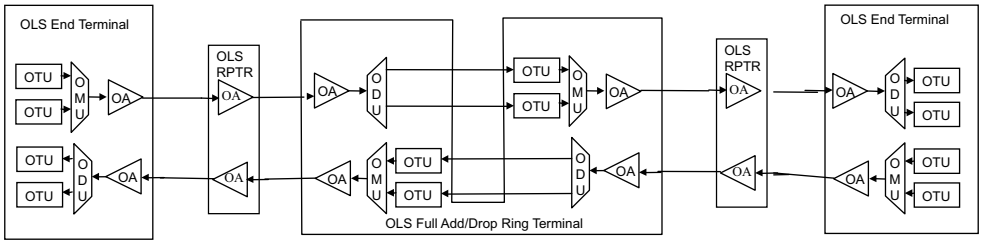

Repeater

Description

A Repeater is typically used between terminal sites that span long distances. Repeaters are used to amplify the optical signal power, enabling the signal to be transmitted over the next span of fiber.

Block Diagram

Figure 3-4, “Typical 2-Fiber Repeater Application” (3-10) shows a simplified block diagram for a typical 2-Fiber Repeater application.

Figure 3-4 Typical 2-Fiber Repeater Application

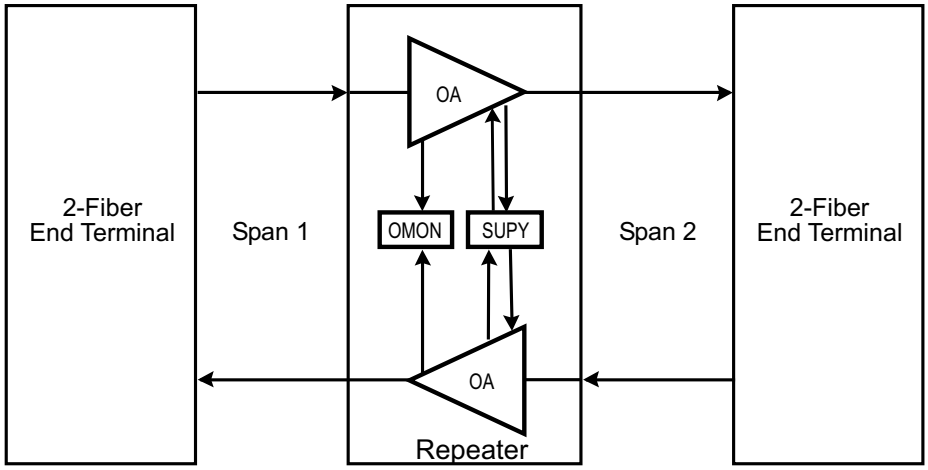

2-Fiber Wavelength Add/Drop (WAD Type 2)

Description

WAD Type 2 is typically used in Ring Applications where a fixed number of specific wavelengths are added and dropped at a single node of an optical network.

Block Diagram

Figure 3-5, “2-Fiber WAD Application” (3-11) shows a simplified block diagram of a typical WAD application in a Type 2 configuration.

Figure 3-5 2-Fiber WAD Application

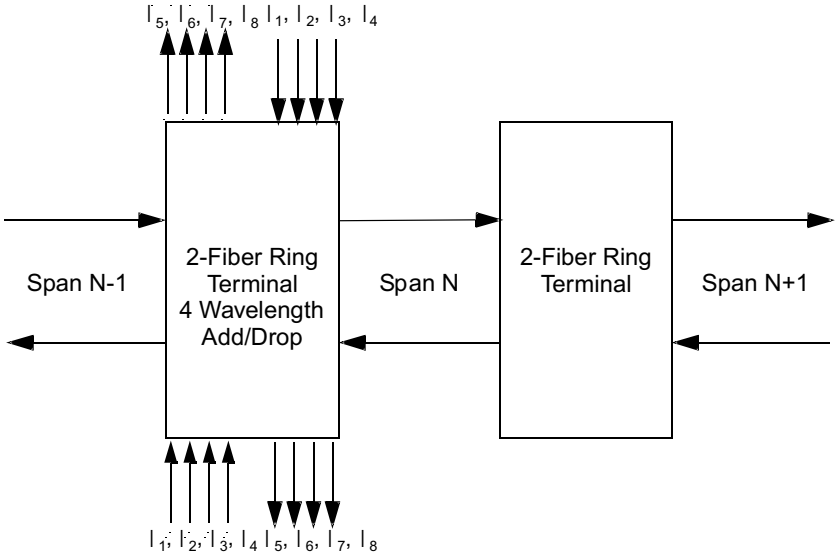

Transmission Circuit Packs

Overview

Purpose This section provides information on the OTU, OMU, OA, DCM, Optical WAD, ODU, and ORS circuit packs and the CLSC apparatus unit.

□

Optical Translator Unit (OTU)

OTU Function

OTUs are required to interface optical signals between the WaveStar® OLS 1.6T and other Network Elements (NEs). OTUs are located at end terminals, ring terminals, and WAD sites. The purpose of the OTU is to provide an optical-to-electrical-to-optical (OEO) function. Add OTUs are used to convert client optical signals to wavelengths that are compatible with the WaveStar® OLS 1.6T. Through OTUs are used to convert client optical signals to wavelengths that are compatible with the OLS 1.6T. Through OTUs are used to regenerate the optical signal and to remove optical analog signal impairments. Drop OTUs are used to convert a signal that has traversed a WaveStar® OLS 1.6T system into an optical signal to the client equipment.

Each OTU supports two OC-192/STM-64, OC-48/STM-16, or HSBB channels per circuit pack. J0 byte observability is supported for OC-192/STM-64 and OC-48/STM-16 signals.

Figure 3-6 Simplified Block Diagram of an OTU

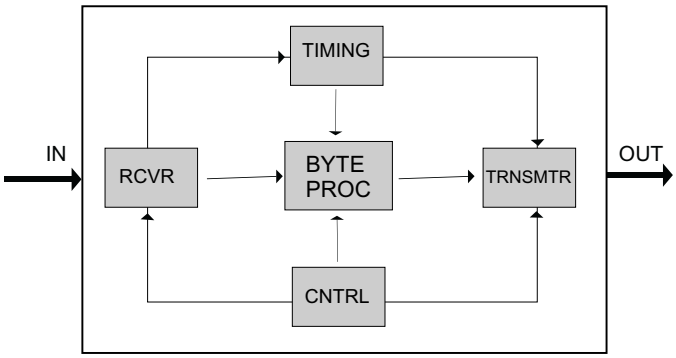

OTU Front Panel Labeling

Figure 3–8 illustrates the front panel labeling of typical Optical Translator Units (i.e., OTU1/2, OTU30/31, OTU1L/2L, OTU30L/31L). *xxxx* and *yyyy*indicate the particular frequencies for the specific OTU, where the value of *xxxx* is less than the value of *yyyy*. OTUDs () are drop-side OTUs (OTUD1, OTUD30).

Figure 3-7 Optical Translator Unit Front Panel Labeling

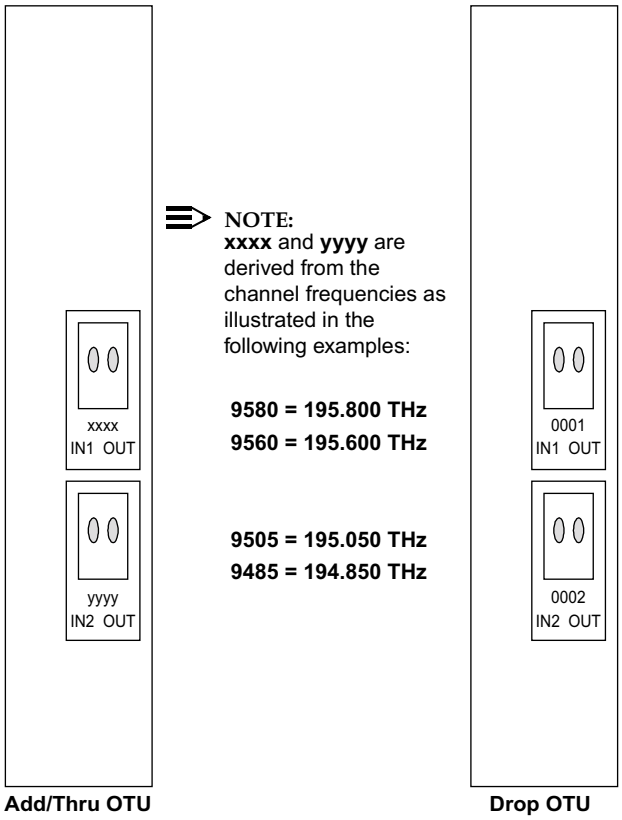

Theory of Operation

An OTU receives two SONET/SDH compatible optical data streams and converts them into electrical signals within the Optical Receive Modules. The signals are then amplified, regenerated, and retimed in a Clock and Data Recovery (CDR) unit.

The Regenerator Overhead (RSOH) portion of the SONET/SDH frame is monitored in the Byte Processor TRBP for maintenance purposes without modifying the contents.

The Transmit Receive Byte Processor (TRBP) output data drives an Optical Transmitter (TxD), which in turn converts the electrical signal back into an optical signal at a very specific and precise stabilized wavelength in the 1550 nm band (″add″ side of the network).

□

4:1 10G Multiplexing (MUX) OTU (OTU70)

Function

The 4:1 10G MUX OTU (OTU70) is used to increase the number of OC-48/STM-16 wavelengths that can be transported over the WaveStar® OLS 1.6T. Unlike existing OTUs, the 10G MUX OTU is bidirectional, i.e., the circuit pack supports transmission in both directions. OTU70 supports four OC-48/STM-16 inputs multiplexed into one MUX OCh 10G output on the source side, and one MUX OCh 10G input that is demultiplexed into 4 OC-48/STM-16 outputs on the sink side.

4:1 10G MUX OTU Diagram

Figure 3-09 shows a diagram of an application of the 4:1 10G MUX OTU circuit pack.

Figure 3-8 Application Featuring 4:1 10G MUX OTU

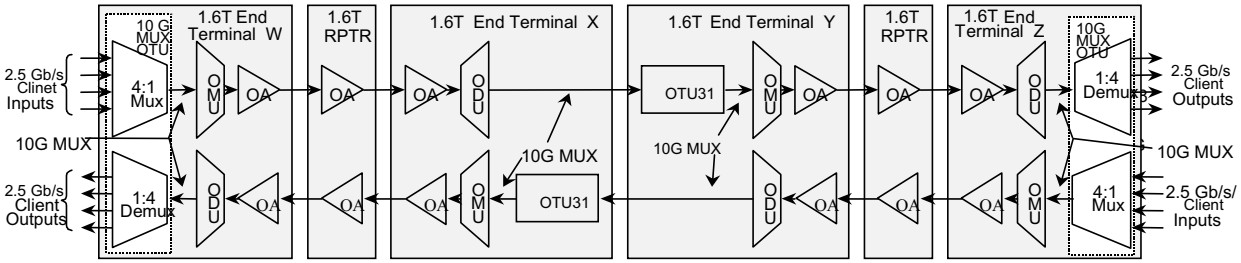

4:1 10G MUX OTU Front Panel Labeling

Figure 3-10, ″10G MUX OTU Front Panel Labeling″ (3-23) illustrates the front panel labeling for the 4:1 10G MUX OTU circuit pack.

Figure 3-9 4:1 10G MUX OTU Front Panel Labeling

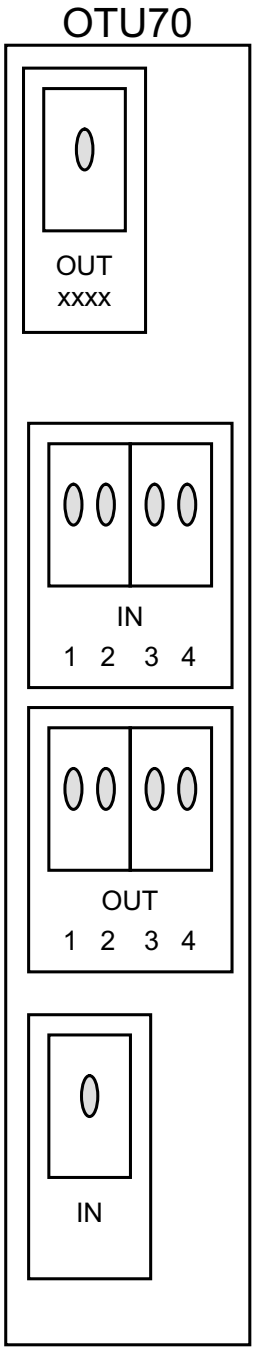

Optical Multiplexer Unit (OMU)

OMU Function

The Optical Multiplexing Unit (OMU) is used to combine discrete wavelengths into a single optical signal from which the original wavelengths can later be extracted for use. OMUs are located at End Terminals and 2 Fiber Ring Terminals. There are OMUs available for both the C-Band and L-Band.

Types of OMUs

The WaveStar® OLS 1.6T includes OMU packs OMU1 (C-Band), OMU1L (L-Band), OMU2 (C-Band), and OMU2L (L-Band):

- OMU1 and OMU1L are used for all signal types of OTUs and each supports 40 channels spaced 100 GHz apart. It includes an external input port that, when connected to OMU2/OMU2L, expands the system to 80 channels at 50 GHz channel spacing.
- OMU2 and OMU2L are used for all signal types of OTU applications and also supports 40 channels, each spaced 100 GHz apart. The available channels are offset from those of OMU1 by +50 GHz.

OMU Functional Block Diagram

Figure 3-11 shows a functional block diagram of the OMU1 and OMU2 circuit packs.

Figure 3-10 Block Diagram — OMU1 and OMU2

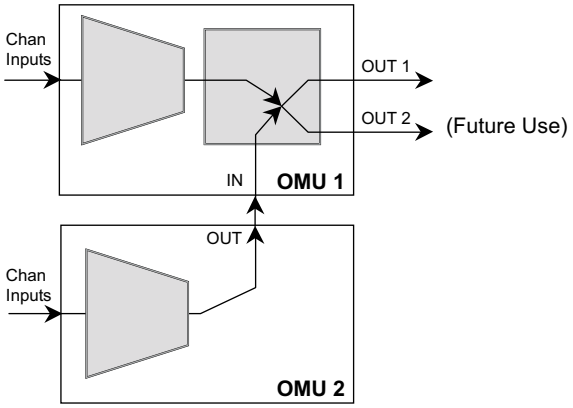

OMU Front Panel Labeling

Figure 3-12 below illustrates the front panel labeling for the OMU1 and OMU2 circuit packs, while Figure 3-13 shows the front panel labeling for L-Band.

Figure 3-11 C-Band Optical Multiplexer Units Front Panel Labeling

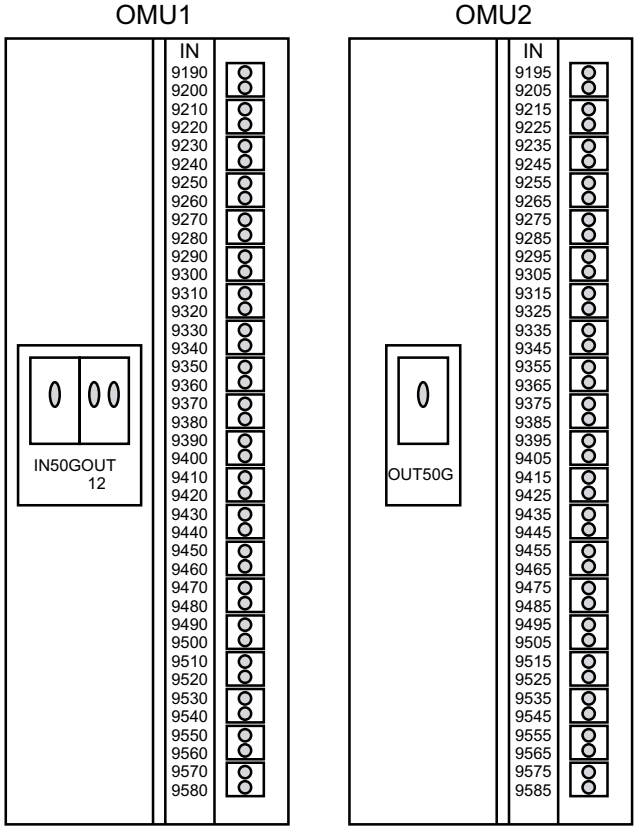

Figure 3-12 L-Band Optical Multiplexer Units Front Panel Labeling

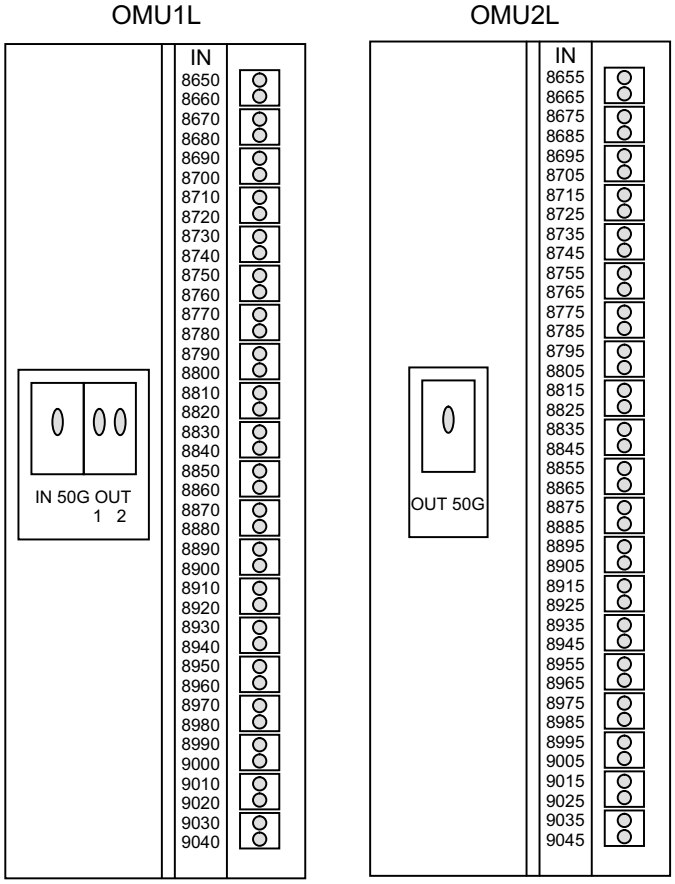

Optical Amplifier (OA)

OA Function

OAs amplify the incoming light to support transmission to the next fiber span down the line. The C-Band OA operates in the 1530 nm to 1563 nm band (191.850 THz - 195.900 THz range). The L-Band OA operates in the 1574 nm to 1605 nm band (186.500 THz - 190.450 THz range). Each OA supports multiple fiber types. OAs are used in End Terminals, Ring Terminals, WAD Terminals, and Repeaters

OA Function Block Diagram

Figure 3-13, “OA Block Diagram” (3-20) shows a block diagram of an OA. The Primary Optical Path is indicated by a heavy black line.

Figure 3-13 OA Block Diagram

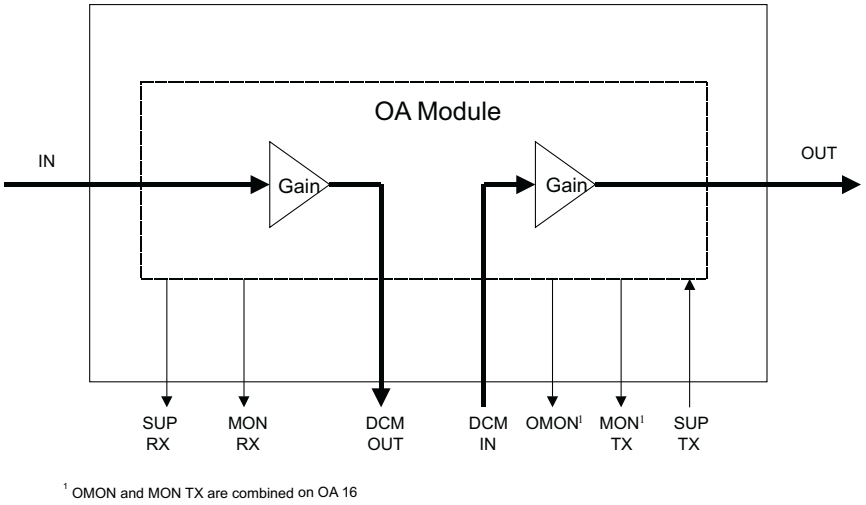

OA Front Panel Labeling

Figure 3-14, “OA Front Panel Labeling” (3-21) illustrates the front panel labeling of typical OA Units.

Figure 3-14 OA Front Panel Labeling

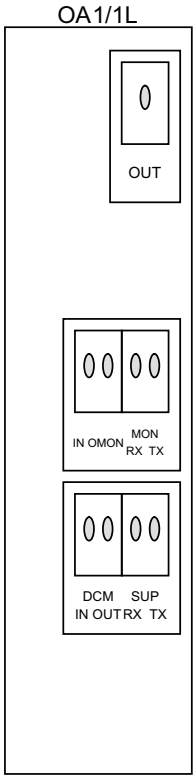

OA Theory of Operation

After an Optical Signal enters the OA, the Supervisory Channel is extracted and routed to the Supervisory Circuit Pack (SUPVY.) The remaining optical signal is then sampled to provide output to the MON RX connector and to calculate total power.

The optical signal then passes through a series of amplifiers and attenuators, powered by a number of pump lasers. After the final amplification, the signal is again filtered to obtain additional control and measurement signals.

Finally, a Supervisory Channel (from the SUPVY Circuit Pack) is added to the outgoing optical signal just before being output for transmission over fiber.

Optical monitoring ports are present on both the receive and transmit sides of the OA circuit pack. The Optical MONitoring circuit pack (OMON) provides data for OA gain adjustment.

□

Dispersion Compensation Module (DCM)

DCM Function

The Dispersion Compensation Module (DCM) is used to overcome chromatic dispersion limits of the transmission fiber.

The DCM is a passive module containing dispersion compensation fiber that offsets the outside fiber plant. The OAs are designed with a DCM port to accommodate the DCMs. Figure 3-15, “Block Diagram of an OA Using DCMs” (3-22) shows in block diagram DCM Locator format where System DCMs are used in the WaveStar® OLS 1.6T.

Figure 3-15 Block Diagram of an OA Using DCMs

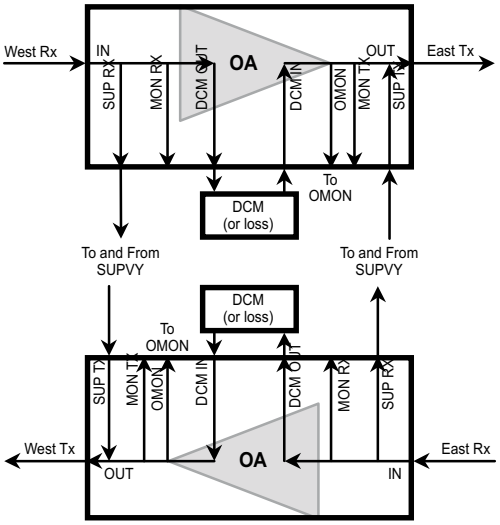

The DCM can be used at all terminal types. Many different values of DCMs are available. The value of DCM to use is dependent on the type and length of outside plant fiber that is being compensated. Note that DCMs are not required in all configurations.

□

Wavelength Add/Drop Type 2 (WAD5/6)

WAD Type 2 Function

The WAD circuit pack provides optical add/drop capabilities at mid-span OA repeater sites.

WAD Type 2 Circuit Packs

Eight fixed wavelengths at the low end of the spectrum are available for add/drop within the system. Each of the available WAD circuit packs support four fixed wavelengths, spaced 200 GHz apart.

WaveStar® OLS 1.6T WAD circuit packs are described below:

- ***WAD5*** supports OC-192/STM-64, OC-48/STM-16, and High-Speed Broadband signals. The four available add/drop frequencies are: 195.800 THz (1531.116 nm), 195.600 THz (1532.681 nm), 195.400 THz (1534.250 nm), and 195.200 THz (1535.822 nm).
- ***WAD6*** supports OC-192/STM-64, OC-48/STM-16, and High-Speed Broadband signals, with the add/drop frequencies offset from those of WAD5 by -100 GHz. The four available add/drop frequencies are: 195.700 THz (1531.898 nm), 195.500 THz (1533.465 nm), 195.300 THz (1535.035 nm), and 195.100 THz (1536.609 nm).

WAD Type 2 Terminals

WAD Type 2 Terminals, adding an extra OA on each line, maximize use of channels with an outlay of less than one span in terms of Engineering Rules. The OAs terminating the East and West Optical Line use a special code with an internal 8 dB LBO that confines output to power levels below 17 dB. Thus, an internal APSD is not required. As shown in Figure 3-17, WAD West and WAD East may be identical packs. The ALOOP OUT-ALOOP IN and the LOOP OUT-LOOP IN ports on the WAD5 and WAD6 circuit packs are connected with fiber jumpers.

Functional Block Diagram

Figure 3–17 shows a functional block diagram of a WAD5/6 circuit pack.

Figure 3-16 Simplified Block Diagram of WAD5/6

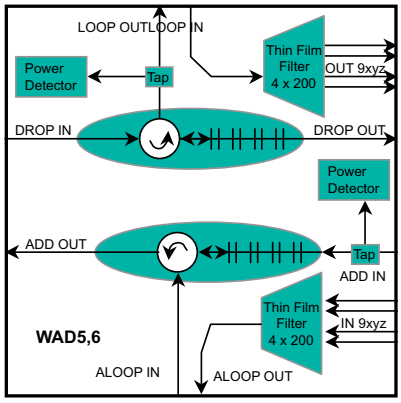

WAD5/6 Front Panel Labeling

Figure 3–18 illustrates the front panel labeling of typical WAD Units. *wwww*, *xxxx*, *yyyy*, and *zzzz* are the four frequencies that are added/dropped for a particular WAD pack.

Figure 3-17 WAD5/6 Circuit Packs Front Panel Labeling

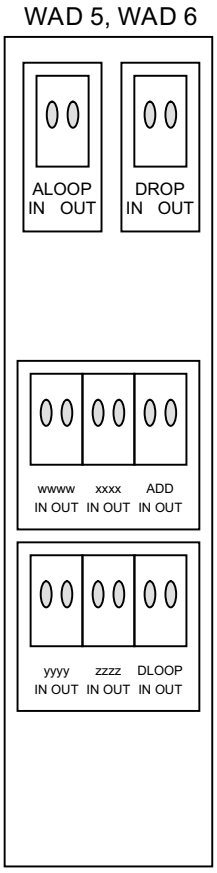

Optical Demultiplexer Unit (ODU)

ODU Function

The Optical Demultiplexer Unit (ODU) extracts individual wavelengths from an optical signal that has been generated using an OMU. ODUs provide support for 80 OC-192/STM-64 channels in the C-Band or the L-Band of the transmission spectrum. ODUs are located in End Terminals and Ring Terminals.

Types of ODU Circuit Packs

The WaveStar® OLS 1.6T includes the following ODU circuit packs for C-Band and L-Band use:

- ODU1C (C-Band) and ODU21 (L-Band) each support 40 channels of any signal type at 100 GHz intervals. It includes an external output port for 80 wavelength operation.
- ODU2C (C-Band) and ODU22 (L-Band) each support 40 channels of any signal type, offset by 50 GHz from ODU1C/ODU21.

Functional Block Diagram

Figure 3-18, “Block Diagram — ODU” (3-26) shows a functional block diagram of the ODU.

Figure 3-18 Block Diagram — ODU

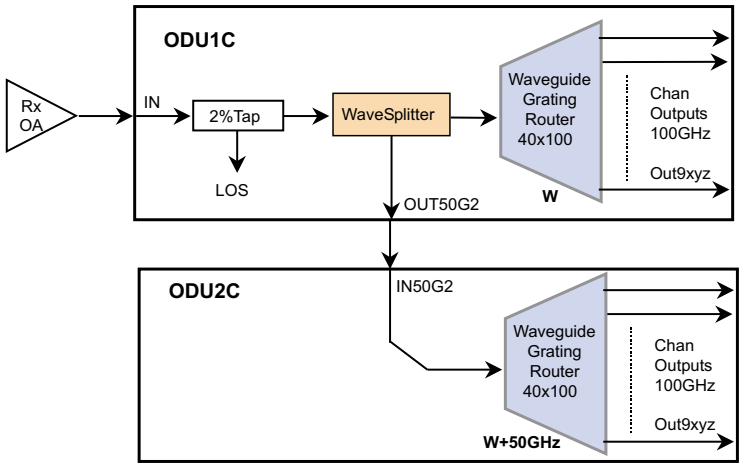

C-Band ODU Front Panel Labeling

Figure 3-19, “C-Band ODU Front Panel Labeling” (3-27) illustrates the front panel labeling of ODU1C and ODU2C.

Figure 3-19 C-Band ODU Front Panel Labeling

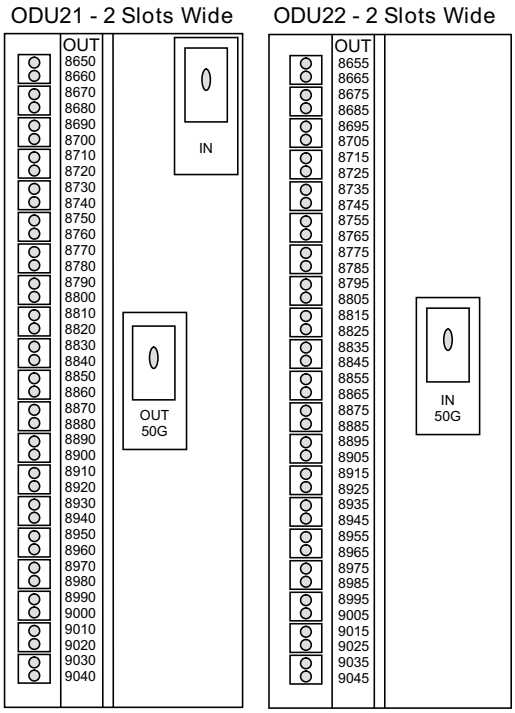

L-Band ODU Front Panel Labeling

Figure 3-19, “C-Band ODU Front Panel Labeling” (3-27) illustrates the front panel labeling of typical ODUs for L-Band applications.

Figure 3-20 L-Band ODU Front Panel Labeling

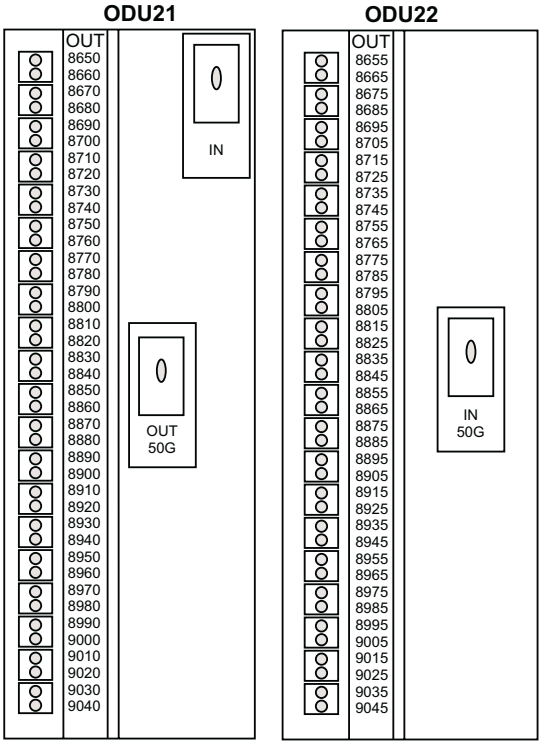

CLSC

CLSC Function

The CLSC apparatus unit resides on the transmission path and provides the means to combine and separate the C-Band and L-Band channels onto/from the same transmission fiber. Two CLSC apparatus units are available:

- CLSC-S (Single CLSC function) is used in End, Ring Terminals, and WADs.
- CLSC-D (Double CLSC functions) is used in Repeater sites.

Functional Block Diagram

Figure 3-21, “CLSC-S Functional Block Diagram” (3-29), shows a functional block diagram of the CLSC-S. The CLSC-D is similar, providing double separator and combiner functions.

Figure 3-21 CLSC-S Functional Block Diagram

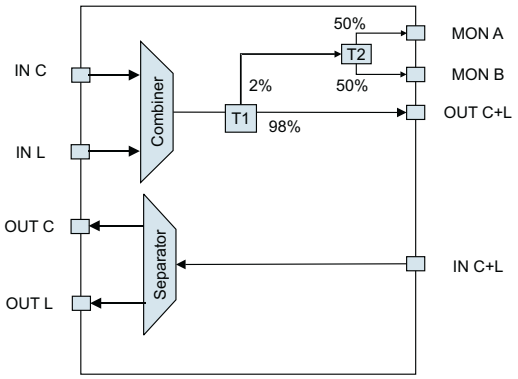

CLSC Front Panel Labeling

Figure 3-22, “CLSC Front Panel Labeling-LC Connector” (3-30), illustrates the front panel labeling for the CLSC-S and CLSC-D using an LC connector.

Figure 3-22 CLSC Front Panel Labeling-LC Connector

CLSC with LC Connectors

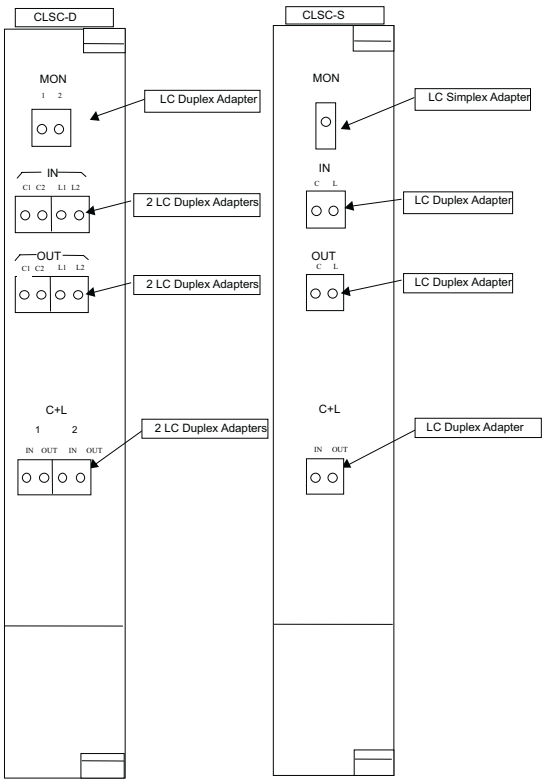

Figure 3-23 CLSC Front Panel Labeling-LC/Universal Connector

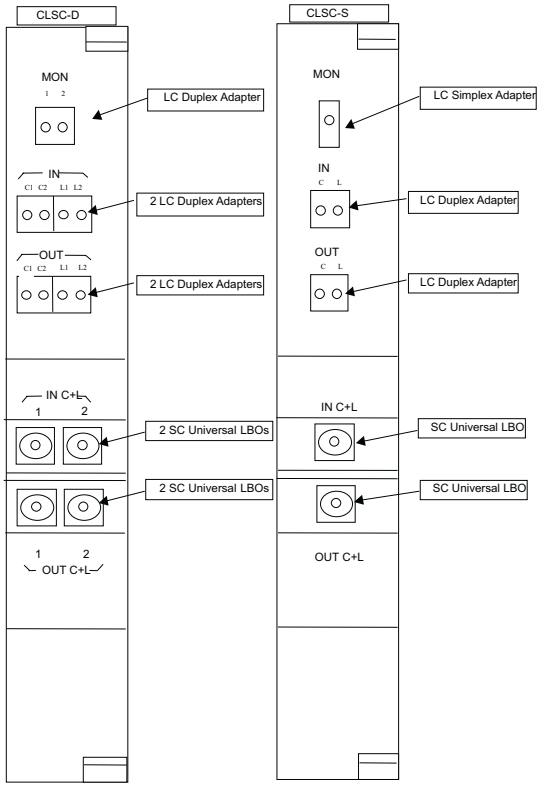

Optical Redundancy Switching (ORS)

ORS Function

The ORS circuit pack works to support 1+1 Protection, providing support against channel failures and supporting unidirectional and nonrevertive 1+1 Optical Channel Path Switching.

Functional Block Diagram

Figure 3-24 ORS Circuit Pack Functional Block Diagram

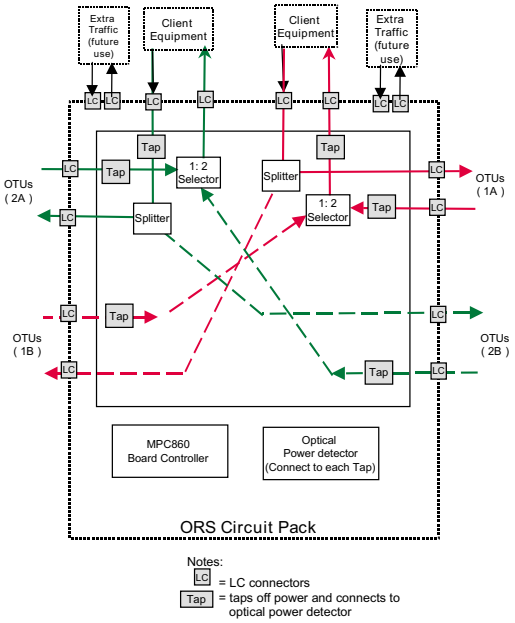

ORS Front Panel Labeling

Figure 3-25, “ORS Front Panel Labeling” (3-33), illustrates the front panel labeling for the ORS.

Figure 3-25 ORS Front Panel Labeling

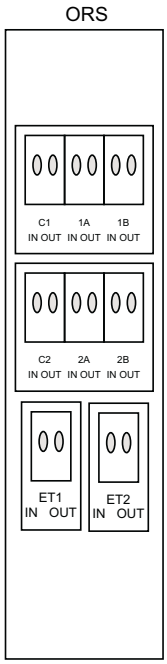

Control Circuit Packs

Overview

Purpose This section provides information on OMONs, SUPVYs, BOS, and EIs.

□

Optical MONitor (OMON)

OMON Function

A single OMON circuit pack can monitor up four OAs in a WaveStar® OLS 1.6T, and can provide full spectrum analysis for any of those OAs in less than a second. OMON circuit packs are used in all configurations. The OMON circuit pack also determines:

- The number of channels (wavelengths) present in the WaveStar® OLS 1.6T, and
- The output power of each channel present

Correcting Gain Tilt

Gain Tilt — the slanting of the gain spectrum — is corrected by the OA Circuit Pack. A number of factors can influence gain tilt, including:

- Variation in span loss and transmission fiber effects
- Raman Gain
- Effects due to dispersion compensating fiber in the system
- Component aging

The OMON circuit pack measures the optical spectrum in terms of peak output power of each channel that is present. This information is then used to control the in-line variable optical attenuator contained within the OA. Adjustments made to the in-line attenuator changes the gain of the amplifier stages with the Optical Amplifier circuit pack. The total erbium gain can therefore be modified, resulting in a gain-shape ″tilt.″ By ″tilting″ the erbium gain in the appropriate direction (using software control), the effects listed above are able to be compensated. Figure 3–27 shows a simplified block diagram of an OMON's function.

Figure 3-26 Simplified Block Diagram of OMON Function

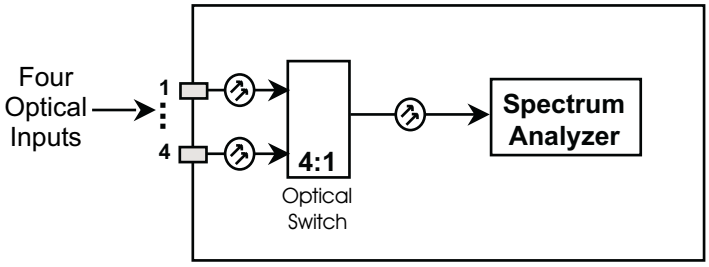

OMON Front Panel Labeling

Figure 3-27, “OMON Front Panel Labeling” (3-36) illustrates the front panel labeling typical of OMON units.

Figure 3-27 OMON Front Panel Labeling

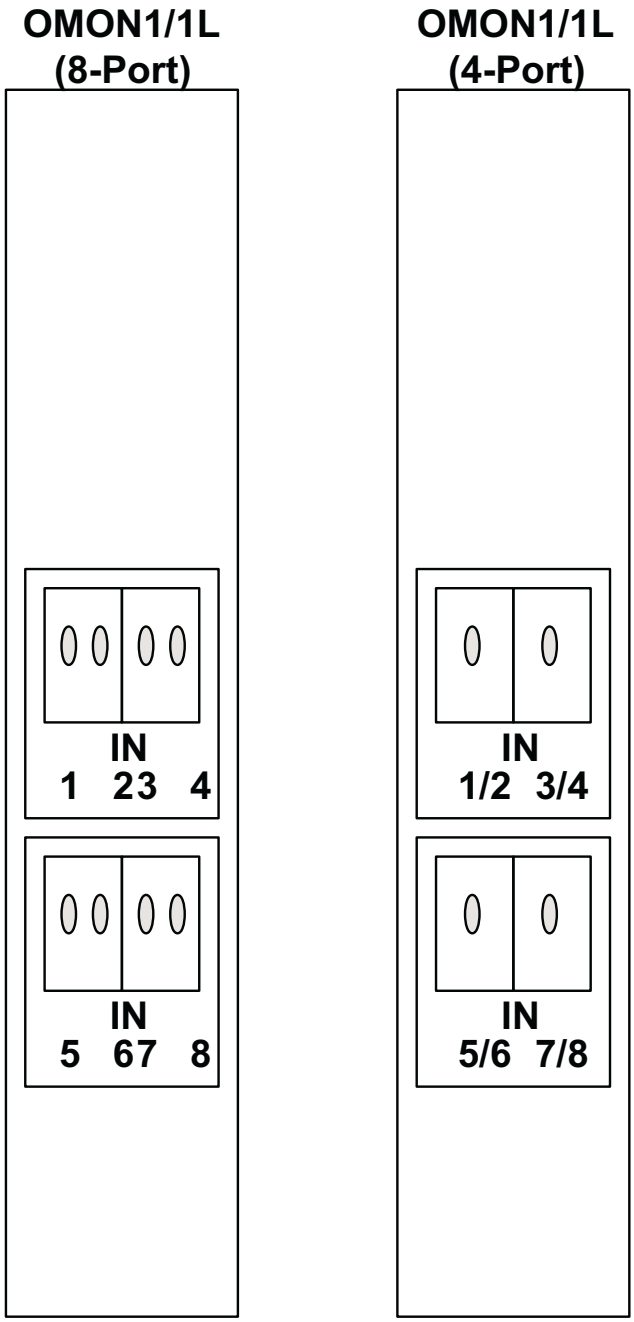

Theory of Operation

The OMON circuit pack is comprised of two functional sections. The Optical Switch is an 4:1 switch that selects any one of four optical input ports for measurement. The Spectrum Analyzer is an optical filter followed by one or more detectors, used to measure the optical power of each wavelength. The electrical output from the detector(s) is reported to the Board Controller.

□

Supervisory Circuit Pack (SUPVY)

SUPVY Pack Function

The Supervisory circuit pack (SUPVY) is a low-speed transmission pack that facilitates communication between WaveStar® OLS 1.6T NEs. The SUPVY is found in all configurations of the WaveStar® OLS 1.6T. The Supervisory circuit pack provides:

- Orderwire Communication
- Express Data Links
- Local Data Links

SUPVY Circuit Pack Functional Block Diagram

Figure 3-28, “Supervisory Circuit Pack Functional Block Diagram” (3-39) shows a functional block diagram for the SUPVY Circuit Pack.

Figure 3-28 Supervisory Circuit Pack Functional Block Diagram

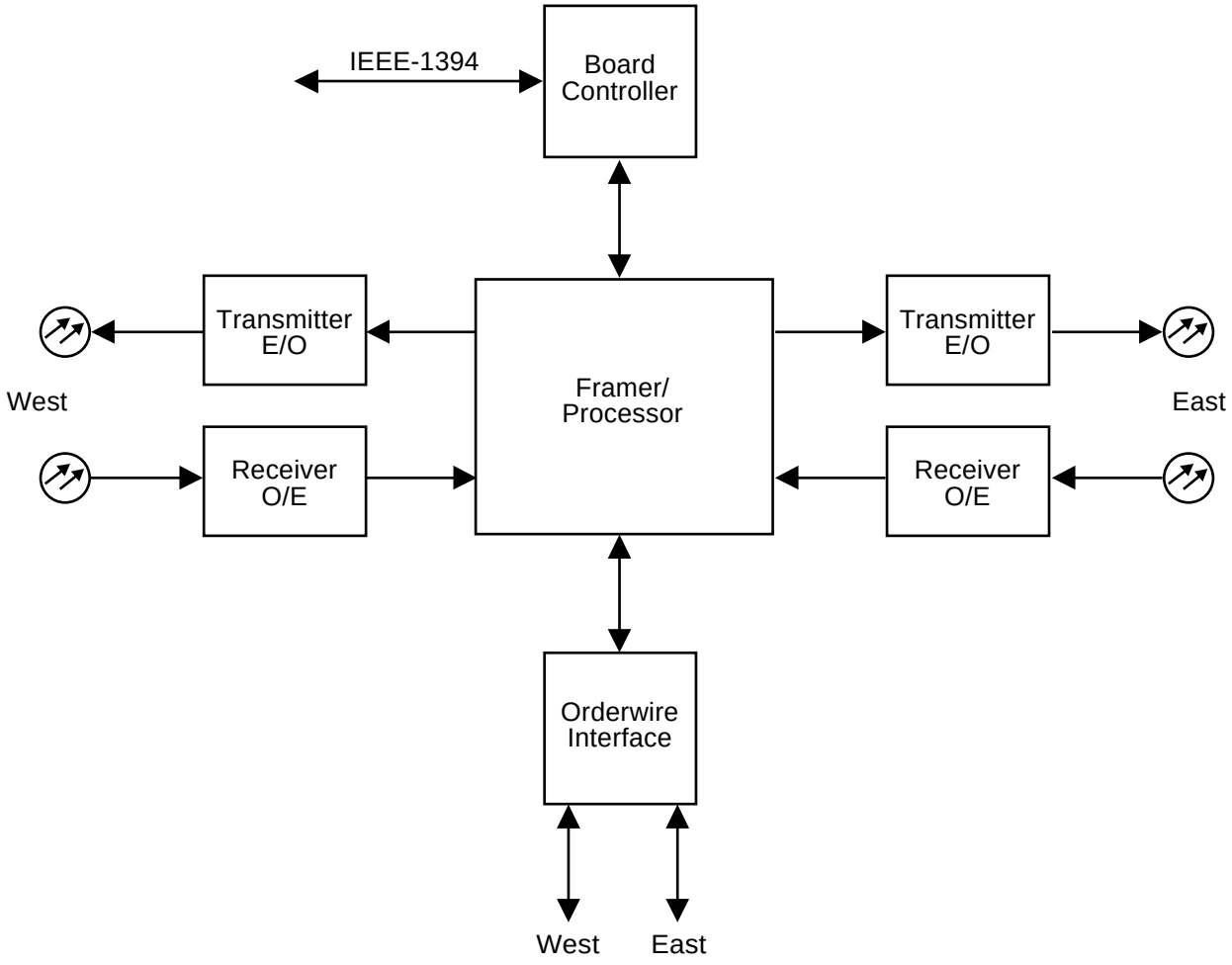

SUPVY Front Panel Labeling

Figure 3-29, “Supervisory Pack Front Panel Labeling” (3-40) illustrates the front panel labeling of typical Supervisory Packs.

Figure 3-29 Supervisory Pack Front Panel Labeling

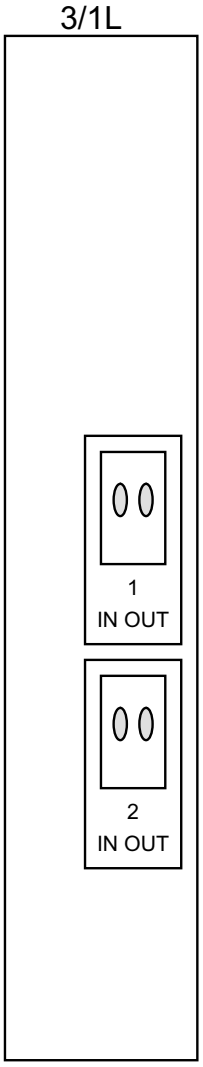

Theory of Operation

The Supervisory Pack is divided into two functionally identical sections: East and West. Data is obtained from the Board Controller Module (BC), and FPGA, and the OW Interface. This data is then put onto a common serial channel, the Supervisory (SUPVY) Channel, which is then encoded and transmitted optically to other Supervisory Packs. The East/West configuration enables two optical lines to be connected, permitting use in two-fiber ring applications.

□

Bay, Overhead, and System (BOS) Controller

BOS Circuit Pack Function

The Bay, Overhead, and System (BOS) Controller circuit pack monitors and controls operation of the WaveStar® OLS 1.6T.

BOS Functional Block Diagram

Figure 3-30, “BOS Controller Functional Block Diagram” (3-41) shows a functional block diagram for the BOS Circuit Pack.

Figure 3-30 BOS Controller Functional Block Diagram

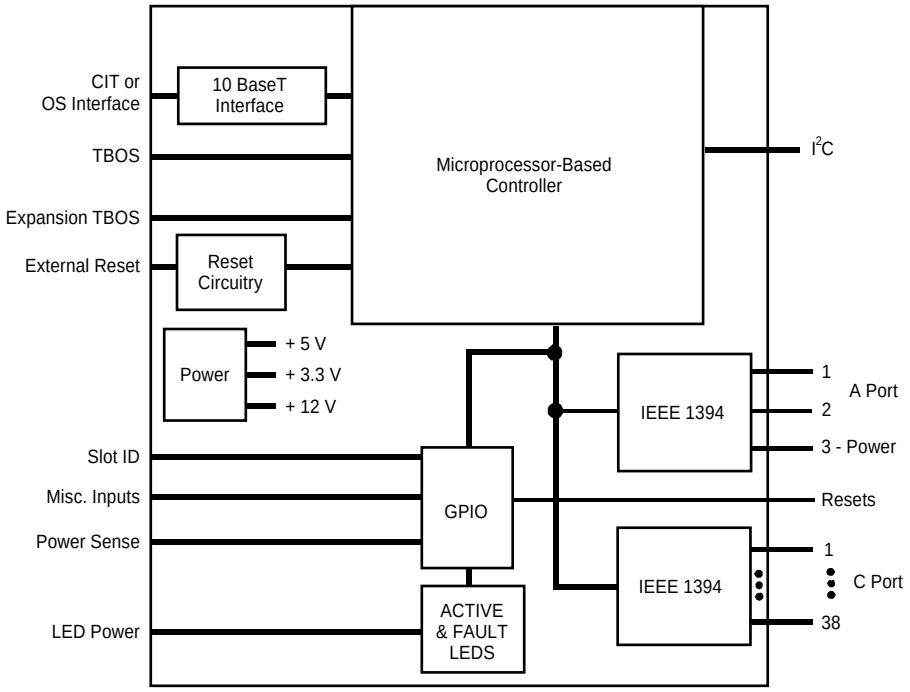

BOS Front Panel Labeling

Figure 3-31, "BOS Front Panel Label" (3-42) illustrates the front panel labeling of typical BOS Packs.

Figure 3-31 BOS Front Panel Label

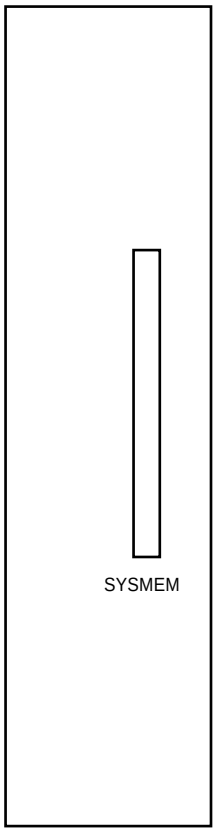

Theory of Operation

The BOS Controller is a single circuit pack designed to perform three independent and similar operations. Depending on where a BOS circuit pack is installed in a WaveStar® OLS 1.6T, the BOS pack is programmed to monitor and control operation of:

- User Interfaces, including office alarms, Craft Terminal termination, and miscellaneous discrete interfaces (System Controller)
- Communications between nodes of the OLS network (Overhead Controller)
- All transmission packs within a bay, reporting information as required to the System Controller (Bay Controller)

□

External Interface (EI)

EI Circuit Pack Function

The EI circuit pack is the user interface to the WaveStar® OLS 1.6T. It includes LEDs and indicators to alert the system operator to any faults with the System.

EI Functional Block Diagram

Figure 3-32, "EI Circuit Pack Functional Block Diagram" (3-43) shows a functional block diagram of the EI circuit pack.

Figure 3-32 EI Circuit Pack Functional Block Diagram

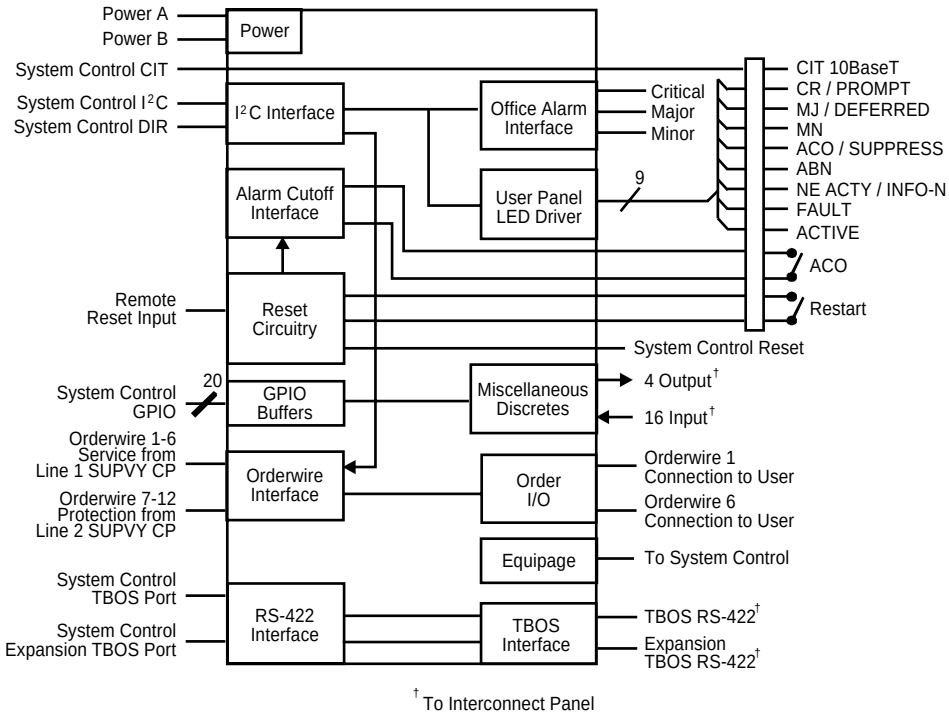

EI Front Panel Labeling

Figure 3-33, “EI Front Panel Label” (3-44) shows the front panel labeling of the EI circuit pack.

Figure 3-33 EI Front Panel Label

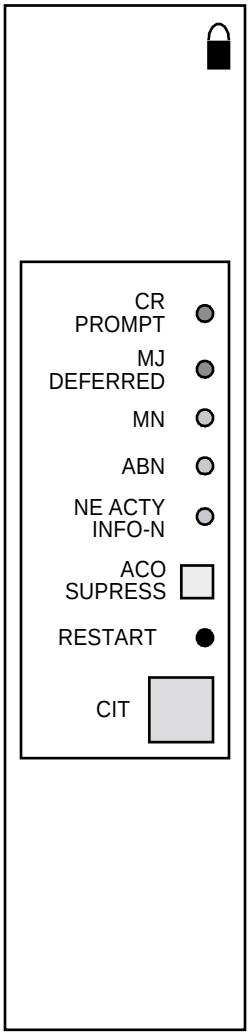

Theory of Operation

The EI circuit pack is a visual interface for the user. The main function of this circuit pack is to route:

- Alarm information from the system to the indicator LEDs on the EI faceplate
- User input to the system, such as Alarm Cut-Off switch activation and System Reset

- WaveStar® OLS 1.6T CIT data from the computer into the system
- Orderwire communications from the user

□

Power

Overview

Purpose

This section includes information on power cables and power distribution.

Method of OLS Distribution

The WaveStar® OLS 1.6T power distribution is based on individual, rather than bulk, power supplies. Each circuit pack contains DC-to-DC converters that convert office battery voltages to the required voltages. This leads to improved system reliability with heat dissipated uniformly across the system, thereby avoiding ″hot spots.″

The WaveStar® OLS 1.6T is powered by dual -48 V direct current (DC) feeders (A and B) for North American (and similar) applications. One unit per feed is used allowing replacement without interrupting the power supply to the shelf. For ETSI (and similar) applications, the WaveStar® OLS 1.6T is powered by dual -60 V_{DC} feeders (A and B). For simplicity throughout this document, only -48 V_{DC} is referenced, with the understanding that in ETSI and similar applications, the A and B power feeds are actually -60 V_{DC}.[1]

Power filtering and fusing are performed on the shelf level. DC-to-DC on-board power converters convert power on individual circuit packs.

[1]For CE mark compliance, the -60V source must be a SELV (Safety Extra Low Voltage) source. The product is designed to operate over ETSI 300 132-2 operational limits.

□

Power Cables

Color Codes

The power feed cables use stranded, color-coded, and keyed connectors. All panel-mounted power connector functions are labeled. Table 4-2, Power Cable Color Codes shows the color codes used for power cabling.

Table 3-1 Power Cable Color Codes

Description	Office Connected Feed Color		Intrabay Feed Color
	Tray	Leads	
$-48V_{DC}$ A	Red	Red	Red
$-48V_{DC}$ A RTN		White	Red/Black Stripe
$-48V_{DC}$ B	Blue	Red	Blue
$-48V_{DC}$ B RTN		White	Blue/Black Stripe

Power Distribution for a System Bay

Theory of Operation

A WaveStar® OLS 1.6T Bay is powered by dual -48 V_{DC} feeders (A and B) which provide redundant power to the bay. Each installation is fed by power cables that branch and terminate directly onto the shelves. Each -48 V_{DC} input is then routed and input to a power filter located on the individual shelves.

Functional Block Diagram

Figure 3-34, "Power Distribution for a System Bay (Functional Block Diagram)" (3-48) shows the overall three-shelf installation power distribution for a WaveStar® OLS 1.6T Bay.

Figure 3-34 Power Distribution for a System Bay (Functional Block Diagram)

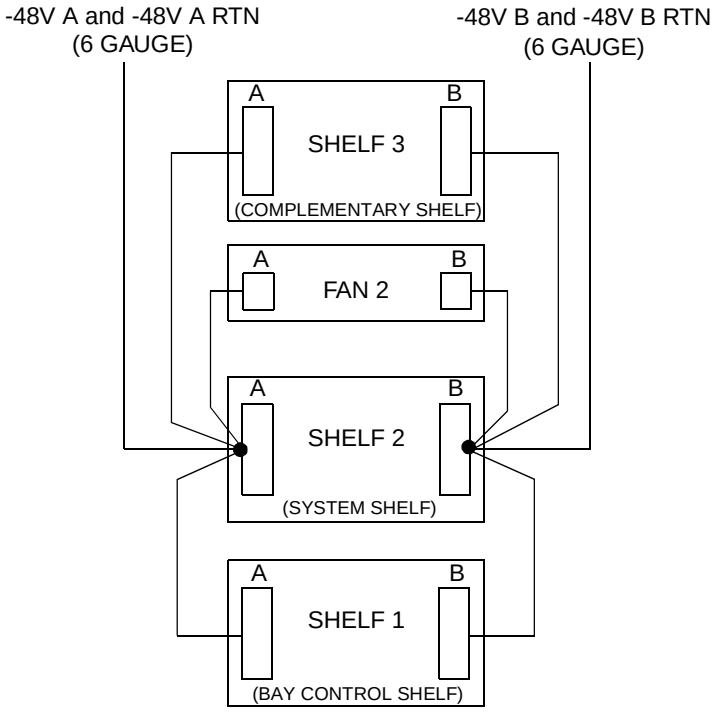

Power Distribution for a Complementary Bay

Theory of Operation

A WaveStar® OLS 1.6T Complementary Bay is powered by dual -48 V_{DC} feeders (A and B) that provide redundant power to the bay, allowing replacement without interrupting the power supply. Each installation is fed by power cables that branch and terminate directly onto the shelves. Each -48 V_{DC} input is then routed and input to a power filter located on the individual shelves.

Functional Block Diagram

Figure 3-35, “Power Distribution for a Complementary Bay (Functional Block Diagram)” (3-49) shows the overall three-shelf installation power distribution for a WaveStar® OLS 1.6T Complementary Bay.

Figure 3-35 Power Distribution for a Complementary Bay (Functional Block Diagram)

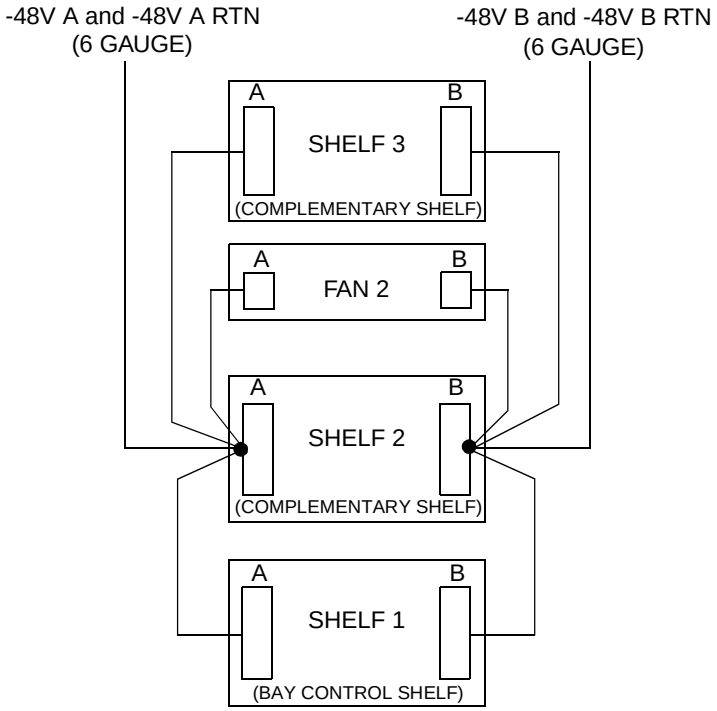

Power Distribution for a Growth Bay

Theory of Operation

A WaveStar® OLS 1.6T Growth Bay is powered by two dual –48 V_{DC} feeders (A, B, C, and D) which provide redundant power to the bay. Shelf 1 and its fan (Fan 1) are powered by one set of feeders (A and B). Shelves 2 and 3, and the shared fan between them (Fan 2), are powered by the second set of feeders (C and D). Each installation is fed by the corresponding power cables that branch and terminate directly onto the shelves. Each –48 V_{DC} input is then routed and input to a power filter located on the individual shelves.

> **Important!** Once the C and D feeders terminate on Shelf 1 of the Growth Bay, they are referenced as –48 V (A) and –48 V (B) respectively on Shelf 1 and Fan 1.

Functional Block Diagram

Figure 3-36, "Power Distribution for a Growth Bay (Functional Block Diagram)" (3-50) shows the overall three-shelf installation power distribution for a WaveStar® OLS 1.6T Growth Bay.

Figure 3-36 Power Distribution for a Growth Bay (Functional Block Diagram)

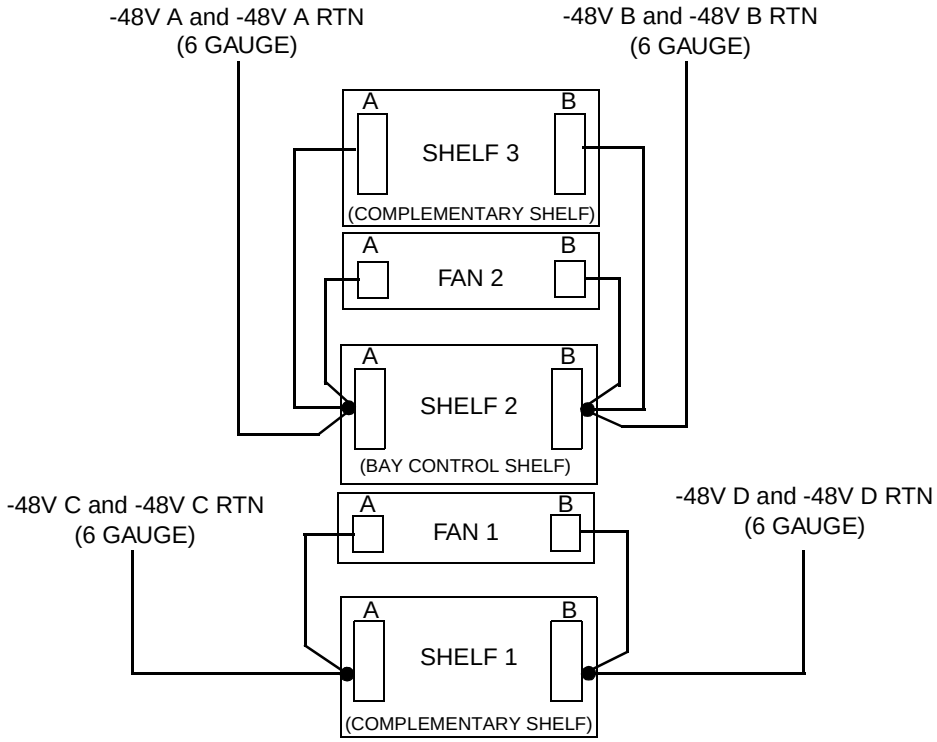

Power Distribution for a Miscellaneously Mounted 2-Fiber Repeater Shelf

Theory of Operation

A WaveStar® OLS 1.6T Miscellaneously Mounted 2-Fiber Repeater Shelf is powered by dual –48 V_{DC} feeders (A and B) that provide redundant power to the bay. Each installation is fed by power cables that terminate directly onto the shelf. Each –48 V_{DC} input is then routed and input to a power filter located on the individual shelf. Miscellaneously mounted OLS shelves are identical to those for OLS cabinets, except that the miscellaneously mounted shelves include two front shelf covers and an attached heat baffle and cover for thermal protection.

Functional Block Diagram

Figure 3-37, “Power Distribution for a Miscellaneously Mounted 2-Fiber Repeater Shelf (Functional Block Diagram)” (3-51) shows the overall power distribution for a WaveStar® OLS 1.6T Miscellaneously Mounted 2-Fiber Repeater Shelf.

Figure 3-37 Power Distribution for a Miscellaneously Mounted 2-Fiber Repeater Shelf (Functional Block Diagram)

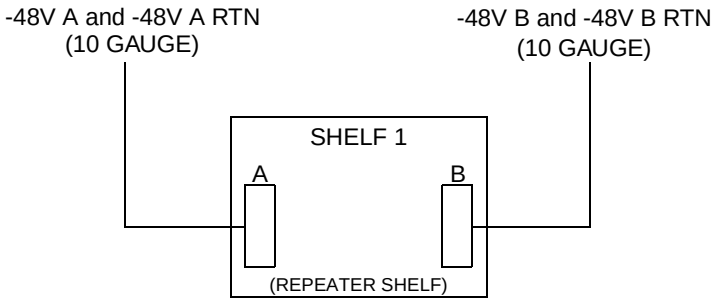

Circuit Pack Power Distribution

Supply Input

Each circuit pack has two independent –48 V_{DC} input supplies (–48A and –48B). If one supply line fails, the second is able to handle the entire load.

Line Conditioning

Each input line is conditioned to reduce conductive noise.

In-Line Fuses

Each –48 V_{DC} input on each circuit pack is fused to prevent circuit board damage.

Power Up and Down

The primary power supply on each circuit pack may be turned on or off externally. ″Soft Start″ circuitry is included to limit in-rush current when a circuit pack is initially inserted or activated.

Power Supply Monitoring

Both the –48A and –48B input supplies include power supply monitoring circuitry.

Low Voltage Cutoff

Low Voltage Cutoff occurs at –38.5 V_{DC} 1.0 V_{DC}.

□

PC Requirements

Desktop PC Requirements

Most customers will dedicate a laptop personal computer (PC) to run the WaveStar® OLS 1.6T CIT applications software, and a properly configured desktop PC will also suffice. CIT support for Pentium4 processors is provided. Table 3-2, “Customer-Provided Desktop PC Requirements” (3-53) shows the requirements for the customer-provided desktop PC:

Table 3-2 Customer-Provided Desktop PC Requirements

Equipment	Minimum	Recommended
Processor	266 Mhz Pentium II	333 Mhz Pentium II
RAM	64 Mbyte	128 Mbyte
Disk space	120 Mbyte	120 Mbyte
Video	800x600 - 256 color	1024x768 - 16 Million color
Network Interface	10 Base T LAN NIC	10 Base T LAN NIC
CD-ROM	2x Speed	4x Speed
Operating System	Windows 95, 98	Windows 2000 or Windows NT 4.0
Browser(Frames Capable)	Internet Explorer 4.0	Internet Explorer 5.0

- Physical interface is an RJ-45 jack.
- For User Panel connections, a 10BaseT crossover cable is required.
- For LAN jack connections, a 10BaseT cable is required. Pin designations/signals are:
  - 1TD+
  - 2 TD-
  - 3 RD+
  - 6 RD-

A desktop PC may be loaded with multiple releases of the CIT application software. This may be necessary when using a single PC to connect to multiple spans or systems that are using different releases of the NE software, or to multiple/different WaveStar® OLS

1.6T products. Multiple versions of the CIT will not run at the same time, however. One version must be exited prior to starting another version.

□

4 Applications

Overview

Purpose

This chapter provides information on basic configurations for the WaveStar® OLS 1.6T. These topologies are available to users of the WaveStar® OLS 1.6T and the WaveStar® OLS 400G/800G.

Contents

Topologies and Applications Overview	4-2
End-to-End with Repeater(s)	4-3
Applications for Through OTUs	4-4
2-Fiber 4-Channel WAD Type 2	4-5
Ring Applications	4-6

Topologies and Applications Overview

Overview

The WaveStar® OLS 1.6T provides high-capacity, dense wavelength division multiplex (DWDM) transmission over various fiber types in support of various configurations.

The WaveStar® OLS 1.6T provides different configurations to cater to your capacity needs:

- WaveStar® OLS 400G/800G
  Up to 80 wavelengths can be supported in either the C-Band or L-Band. This assumes that the CLSC is not deployed, thereby limiting growth up to 800G. If the CLSC is deployed with either C-Band or L-Band, the system can grow up to 160 wavelengths, 1.6T. It is recommended that the CLSC is deployed to ensure flexibility.
- WaveStar® OLS 1.6T
  Up to 160 wavelengths can be supported and the system will support any combination of C-Band and L-Band. Note that this implies that the CLSC is deployed with either the C-Band or L-Band configuration. In C-Band, these circuit packs (OC-192/STM-64, OC-48/STM-16, 10-G MUX OTU, HSBB, ORS, and WAD) are supported. In L-Band, OC-192/STM-64, OC-48/STM-16, and HSBB are supported.

Important! The 4:1 10G Multiplex OTU, ORS, and WAD are not supported for L-Band use.

Topologies

The topologies described below apply to any of the above configurations, except as noted.

- End-to-End with Repeater(s)
- End-to-End with Full Add/Drop Terminals
- End-to-End with Repeater(s) and WAD
- Rings, including Ring-to-Ring, Ring-to-Ring with Repeater(s), and Ring-to-Ring with Repeater(s) and WAD.

□

End-to-End with Repeater(s)

Description End-to-end applications supported by the WaveStar® OLS 1.6T will require repeaters between terminals that are separated by more than the distance of specified span lengths in the Engineering Rules . Figure 4–1 shows a typical end-to-end application utilizing a repeater.

Figure 4-1 Typical End-to-End Application with Repeater

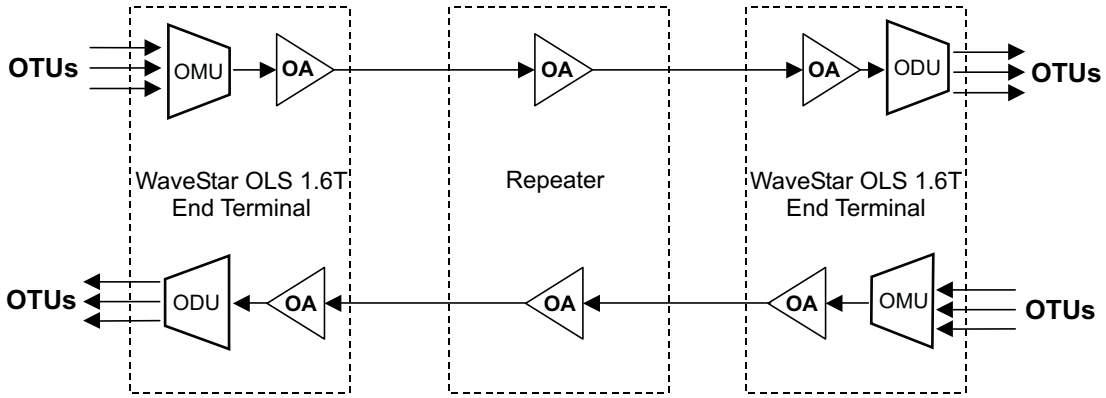

Applications for Through OTUs

Description

OTU circuit packs within an end-to-end configuration provide a means to clean up impairments to the optical signal that happen as a result of passing through the OLS system. The OTU eliminates noise and distortions caused by the system and outputs a fresh optical signal that can then be transported over another OLS system. See the two examples shown in Figure 4-2, “Examples of 2-Fiber Ring Terminals with Full Add/Drop” (4-4). In the first example, two OLS systems are connected together via a back-to-back End Terminal configuration using OTUs to regenerate the optical signal. In the second example, OTUs are used in an OLS Full Add/Drop Ring Terminal to provide through channels from one OLS system to the other. Thus, OTUs can be used to cascade multiple OLS systems together. Up to 75 OTUs in series can be used to achieve very long point-to-point configurations. The examples shown are for 800G capacity, but 1.6T applications are also supported.

Figure 4-2 Examples of 2-Fiber Ring Terminals with Full Add/Drop

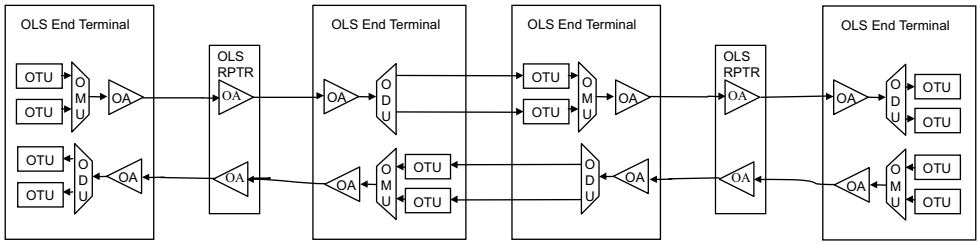

Back-to-back End Terminal Example

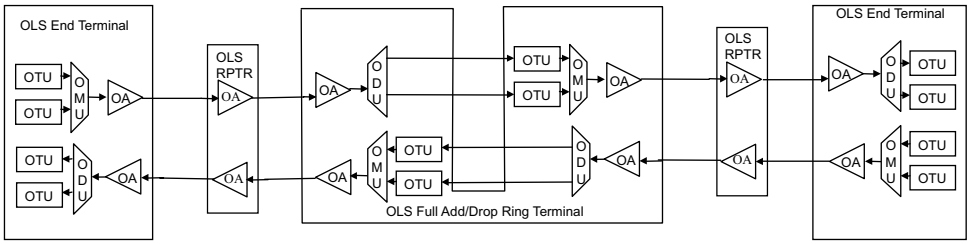

Ring Terminal Example

2-Fiber 4-Channel WAD Type 2

WAD Type 2 Description

The 2-Fiber 4-Channel WAD Type 2 application, introduced in Release 5.0, includes two OAs in the transmission path, with the WAD circuit packs located between the two OAs. WAD Type 2 applications allow usage of the same wavelength on both sides of a WAD node. There is a one-span reduction on Engineering Rules for each Type 2 WAD site deployed in a system.

Figure 4-3 2-Fiber 4-Channel Wavelength Add/Drop Type 2 Terminal Block Diagram

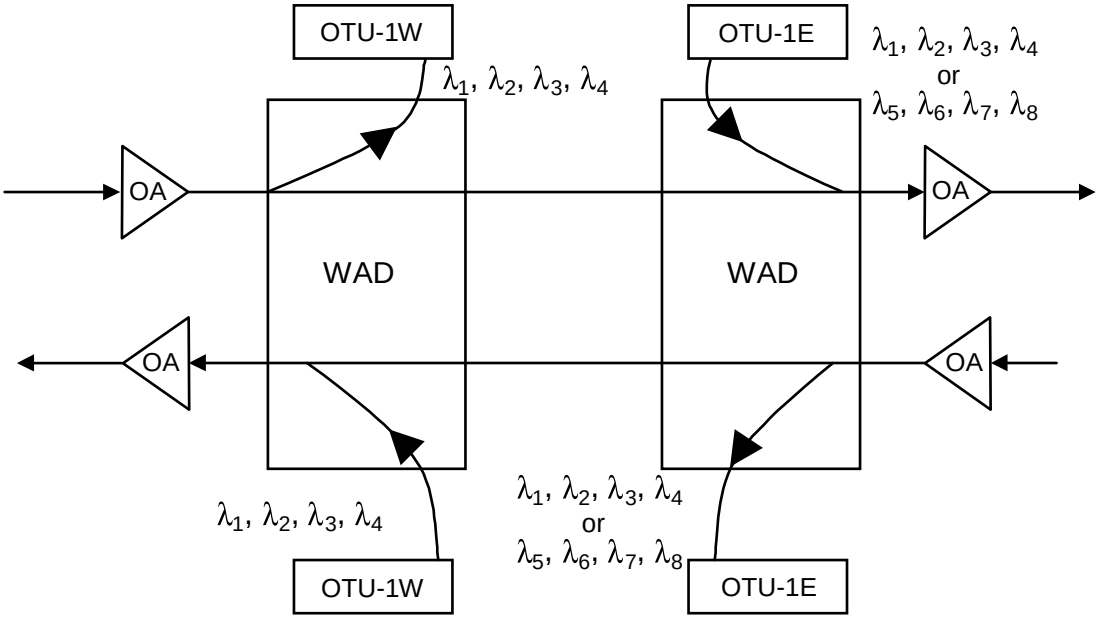

□

Ring Applications

2-Fiber Ring Terminal

The WaveStar® OLS 1.6T is designed to function in ring applications. An OLS Full Add/Drop Ring Terminal provides local access to all channels supported. Refer to Figure 4-4, “Example of 2-Fiber Ring Terminals with Full Add/Drop” (4-6).

Figure 4-4 Example of 2-Fiber Ring Terminals with Full Add/Drop

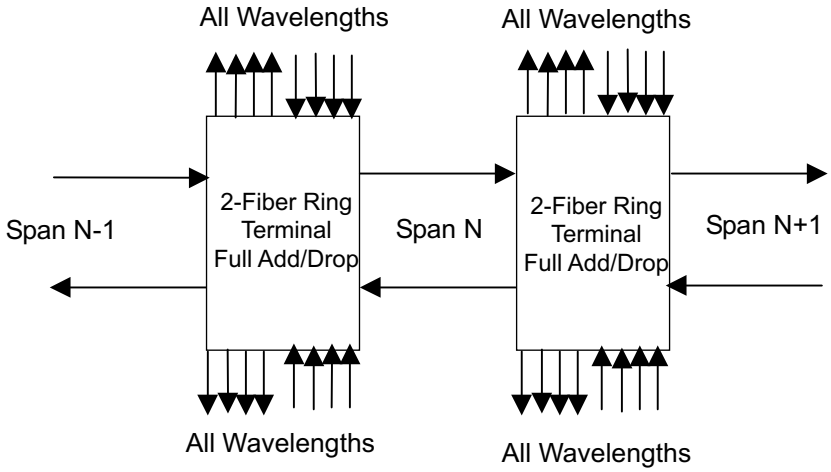

2-Fiber Ring Applications

The Full Add/Drop Ring Terminal supports different ring topologies and provides access to all channels on the fiber ring. Figure 4-5, “Example of a 3-Node, Closed 2-Fiber Ring” (4-6) depicts a 3-node, closed 2-Fiber Ring configuration. Through channels pass through an OTU and can be added back to the fiber ring.

Figure 4-5 Example of a 3-Node, Closed 2-Fiber Ring

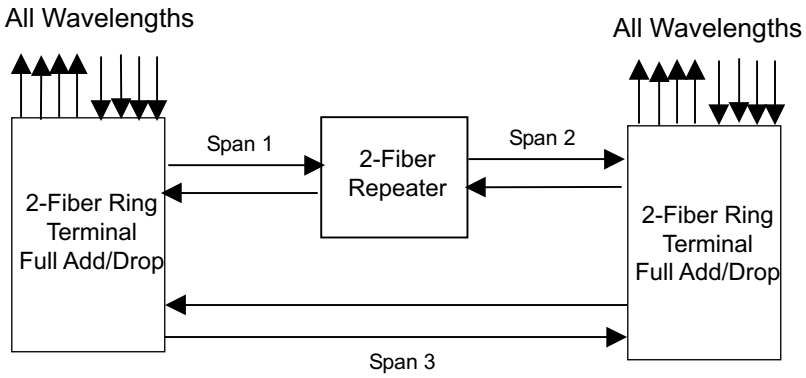

2-Fiber Ring Terminal with 4-Channel Add/Drop

A Fixed Add/Drop Ring Terminal (WAD Type 2) can be used in Ring applications. Four wavelengths are added and dropped at a single node.

Figure 4-6, "2-Fiber 4-Channel Wavelength Add/Drop Type 2 Application" (4-7) shows a typical 2-Fiber 4-Channel WAD Type 2 application, which allows use of all channels on the line with a one-span impact in the reach (refer to Chapter 5, System Planning and Engineering) caused by adding an additional OA on each line. WAD West and WAD East may be identical packs.

Figure 4-6 2-Fiber 4-Channel Wavelength Add/Drop Type 2 Application

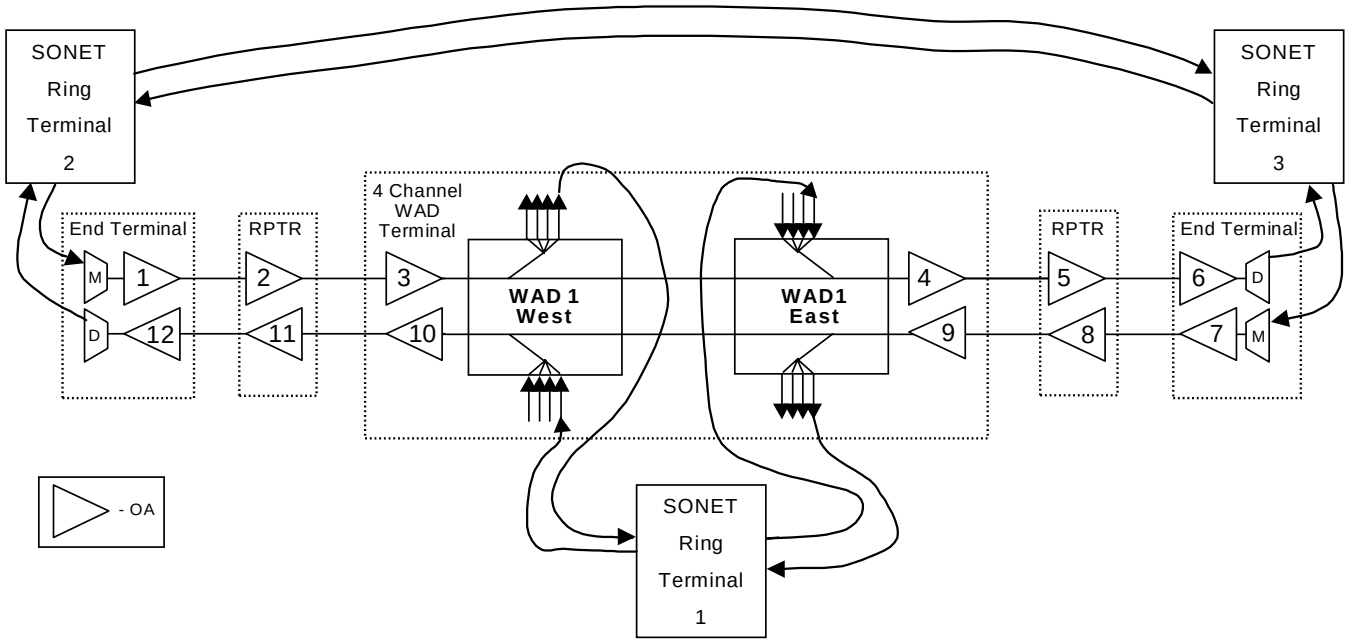

5 System Planning and Engineering

Overview

Purpose

This chapter provides information on system engineering rules, dispersion compensation rules, wavelength growth plan, system concatenation, and data communications networks.

Contents

Engineering Rules	5-3
General Notes	5-4
Engineering Rules for the WaveStar® OLS 1.6T	5-6
Engineering Rules for SSMF	5-7
Engineering Rules for TeraLight™ Fiber	5-10
Engineering Rules for TrueWave RS	5-12
Engineering Rules for TrueWave® Classic	5-15
Engineering Rules for TrueWave® Plus	5-17
Engineering Rules for Corning E-LEAF™	5-19
Engineering Rules for Corning LEAF ™	5-22
Engineering Rules for Corning LS	5-24
Engineering Rules for Dispersion Shifted Fiber	5-26
Path Penalties for Polarization Mode Dispersion (PMD) Effects	5-27

	5-28
Dispersion Compensation Rules	5-30
General Notes on Dispersion Compensation	5-31
Dispersion Compensation Rules for the OLS 1.6T	5-32
Wavelength (Channel) Growth Plan	5-43
Channel Plans	5-44
Concatenating Systems	5-56
Maximum Number of OTUs Between Client Equipment	5-57
Data Communications Networks	5-58
DCN Parameter Specifications	5-61
General Information	5-63
Remote Access from a TL1-Based OS	5-66
Network Partitioning Engineering Rules and Guidelines	5-67
Installation with IS-IS Areas for Level 2 Routing	5-79
SDL Provisioning	5-83
SNMS Connections	5-84

Engineering Rules

Overview

Purpose

This section provides information on engineering rules.

What are Engineering Rules?

Engineering Rules are a series of tables that provide span loss information, which is unique to each fiber type, and correlate this into information required when planning and engineering an Optical Lightwave System. Each of these engineering tables includes information on:

- Maximum number of channels
- Maximum number of spans
- Average span loss and maximum 1-span loss (dB)
- Maximum Total reach (dB)
- Average span distance (km)
- Maximum total reach (km)

Engineering Rules indicate technical feasibility and do not reflect system costs. They are based upon calculations, simulations, and measurements. These values may be modified as a result of ongoing Engineering evaluations.

Refer to the following sections for the Engineering Rules for the following supported fiber types:

- Standard Single Mode Fiber (SSMF)
- TeraLight™ Fiber
- TrueWave RS (Reduced Slope)
- Corning E-LEAF Fiber
- TrueWave Classic
- TrueWave Plus
- Corning LEAF
- Corning LS
- Dispersion Shifted Fiber (DSF) for L-Band only

□

General Notes

Notes for Engineering Rules Tables

The Engineering Rules for the WaveStar® OLS 1.6T (400G/800G), Release 3.0.1, NE configurations are located in the ***WaveStar® OLS 400G Applications, Planning, and Ordering Guide, Release 3.0.1.***

The following information is generally applicable to the 1.6T configuration of the WaveStar® OLS 1.6T, Release 6.2:

1. The span distance entries include dispersion limits, as well as loss limits. The tables include an average span distance and a total reach specification that is the number of spans times the average span distance. Both the maximum attenuation and maximum distance limits must be applied for all applications.
2. The R3 Engineering Rules are still valid for 400G configurations, and are not repeated in this document.
3. For OC-48/HSBB ONLY applications and an 800G configuration, the OC-48 tables of the Engineering Rules for Release 3.0.1 are still valid. If OC-192 is deployed, the 800G Engineering Rules for Release 6.0 must be followed.
4. Linear Tilt Filter is no longer required for any application including OLS 400G Release 3.0.
5. Current margin allocations are valid for fibers with minimum PMD (<5 ps mean PMD).
6. The OLS Release 6.2 Engineering Rules guarantee a BER of 10^{-16} (EOL). These rules do not support 10Gb/s OTUs without strong FEC.
7. If BER of 10^{-12} (EOL) is desired, up to one dB of additional OSNR margin will be available.
8. When using Lucent Technologies Compatible Optics receivers that do not have the adaptive decision threshold algorithm, a 1 dB penalty must be taken for all rules. This means you need to subtract 1 dB from the span losses listed in these Engineering Rules. Please contact your 10G Compatible Optics Product Manager to determine if the equipment has that feature.
9. The Wavelength Add/Drop (WAD) Type 2 Terminal requires subtracting 1 span for each WAD terminal with no reduction in span loss. For example, 7 (n) physical spans with one (m) WAD Type 2 Terminal must follow the 8 (n + m) span rule for that fiber type. WAD only applies to C-Band systems.

10. The use of the WAD Type 1 Terminal requires subtracting 2 dB from the spans on either side of the WAD terminal. WAD only applies to C-Band systems.
11. These rules assume the use of LBOs at the output of OTUs to balance channel power levels at the output of the transmit OA. These LBOs can be eliminated with a corresponding reduction of 1.5dB in span loss.
12. All the span losses listed in the table include allowable EOL outside plant loss values. Customer specific allocations for fiber aging and maintenance should be subtracted from these values.
13. All the span losses listed here are allowable outside plant loss values including LGXs. The line LBO loss and CLSC loss (if applicable) should not be included in the span loss.
14. The minimum total span loss, which includes the line LBO, CLSC, and outside plant loss should be 20 dB for a C-Band configuration and 23 dB for an L-Band configuration. .
15. There is a column indicating the maximum loss of any one span in multiple-span applications. This does not change the total reach of the system. That is, each individual span must not exceed the maximum one span value, and the sum of all spans must not exceed the total reach.
16. The spans followed by a single asterisk (*) indicate that the span loss values are limited by the L-Band SUPVY pack.
17. The distances followed by two asterisks (**) indicate that these distances are limited due to dispersion compensation requirements.
18. In C-Band only configurations, SUPV3 pack is required when (Span Loss + Line LBO) ≥ 32 dB. This is indicated in the rules by three asterisks (***) following the Max # of Spans number.
19. A new column has been added to the tables listing the per channel power (**oppc**) setting.

□

Engineering Rules for the WaveStar® OLS 1.6T

Overview

Purpose The following section provides the Engineering Rules tables that apply to various fiber types for Release 6.2 of the WaveStar® OLS 1.6T.

□

Engineering Rules for SSMF

Applications ***Applications: Signal Mix up to 10 Gb/s.***

Table 5-1 SSMF — C-Band 800G (No Upgrade to 1.6T)

Max # Channels	Channel Plan	Max # Spans	Span Loss (dB) Avg.	Max One Span (dB)	Total Reach (dB) max	Avg. Span (km) max	Total Reach (km) max	Line LBo (dB)	oppc (dBm)
80	A or B	1 * * *	34	34	34	135	135	0	3.5
80	A or B	2 * * *	32	34	64	120	240	0	3.5
80	A or B	3 * * *	30	32	90	110	330	0	3.5
80	A or B	4	28	30	112	105	420	0	3.5
80	A or B	5	27	29	135	100	500	0	3.5
80	A or B	6	25	27	150	100	600	0	3.5
80	A or B	7	24	26	168	96	672	0	3.5
64	C or D	8	23	25	184	92	736	2	3.5
64	C or D	9	22	24	198	88	792	2	3.5
64	C or D	10	22	24	220	88	880	2	3.5
64	C or D	11	21	23	231	84	924	2	3.5
64	C or D	12	20	22	240	82	984	2	3.5
32	D	10	25	27	250	85	850	2	6.5
32	D	12	24	26	288	82	984	2	6.5

Notes:

1. In C-band only configurations, SUPVY3 pack is required when (Span Loss + Line LBO) ≥ 32 dB. This is indicated in the rules by three asterisks (***) following the ***Max # Spans*** number.

Applications: Signal Mix up to 10 Gb/s.

Table 5-2 SSMF — L-Band 800G (No Upgrade to 1.6T)

Max # Channels	Channel Plan	Max # Spans	Span Loss (dB) Avg.	Max One Span (dB)	Total Reach (dB) max	Avg. Span (km) max	Total Reach (km) max	Line LBo (dB)	oppc (dBm)
80	A	1 *	32	32	32	130	130	0	3.5
80	A	2 *	32	32	64	120	240	0	3.5
80	A	3	30	30	90	110	330	0	3.5
80	A	4	28	29	112	105	420	0	3.5

Table 5-2 SSMF — L-Band 800G (No Upgrade to 1.6T) (continued)

Max # Channels	Channel Plan	Max # Spans	Span Loss (dB) Avg.	Max One Span (dB)	Total Reach (dB) max	Avg. Span (km) max	Total Reach (km) max	Line LBo (dB)	oppc (dBm)
80	A	5	26	28	130	100	500	0	3.5
80	A	6	24	26	144	100	600	1	3.5
80	A	7	23	25	161	96	672	1	3.5
64	B	8	23	25	184	92	736	2	3.5
64	B	9	22	24	198	88	792	2	3.5
64	B	10	22	24	220	88	880	2	3.5
64	B	11	21	23	231	84	924	2	3.5
64	B	12	21	23	252	82	984	2	3.5
32	B	10	25	27	250	85	850	2	6.5
32	B	12	24	26	288	82	984	2	6.5

Notes:

1. Spans followed by a single asterisk (*) indicate that the span loss values are limited by the L-Band SUPVY circuit pack.

Applications: Signal Mix up to 10 Gb/s.

Table 5-3 SSMF— 1.6T

Max # Channels		Channel Plan		Max # Spans	Span Loss (dB) Avg.	Max One Span (dB)	Total Reach (dB) max	Avg. Span (km) max	Total Reach (km) max	Line LBO (dB)	oppc (dBm)	
L-Band	C-Band	L-Band	C-Band								L-Band	C-Band
80	80	A	A or B	1*	29	29	29	130	130	0	3.5	3.5
80	80	A	A or B	2*	29	29	58	120	240	0	3.5	3.5
80	80	A	A or B	3	27	29	81	110	330	0	3.5	3.5
80	80	A	A or B	4	25	28	100	105	400	0	3.5	3.5
80	80	A	A or B	5	24	27	120	100	500	0	3.5	3.5
80	80	A	A or B	6	22	25	132	100	600	0	3.5	3.5
80	64	A	C or D	3	28	29	84	110	330	0	3.5	4.5
80	64	A	C or D	4	26	28	104	105	420	0	3.5	4.5
80	64	A	C or D	5	25	27	125	100	500	0	3.5	4.5
80	64	A	C or D	6	23	25	138	100	600	0	3.5	4.5

Notes:

1. Spans followed by a single asterisk (*) indicate that the span loss values are limited by the L-Band SUPVY circuit pack.

□

Engineering Rules for TeraLight™ Fiber

Applications: Signal Mix up to 10 Gb/s

Table 5-4 TeraLight™ —C-Band 800G (No Upgrade to 1.6T)

Max # Channels	Channel Plan	Max # Spans	Span Loss (dB) Avg.	Max One Span (dB)	Total Reach (dB) max	Avg. Span (km) max	Total Reach (km) max	Line LBo (dB)	oppc (dBm)
80	A or B	1	34	34	34	130	130	0	3.5
80	A or B	2	32	34	64	120	240	0	3.5
80	A or B	3	30	32	90	115	345	0	3.5
80	A or B	4	28	30	112	105	420	0	3.5
80	A or B	5	27	29	135	100	500	0	3.5
80	A or B	6	25	27	150	96	576	0	3.5
80	A or B	7	24	26	168	90	630	0	3.5
64	C or D	8	23	25	184	90	720	2	3.5
64	C or D	9	22	24	198	88	792	2	3.5
64	C or D	10	22	24	220	85	850	2	3.5
64	C or D	11	21	23	231	80	880	2	3.5
64	C or D	12	20	22	240	80	960	2	3.5
32	D	10	25	27	250	85	850	2	6.5

Notes:

1. In C-band only configurations, SUPV3 pack is required when (Span Loss + Line LBO) ≥ 32 dB. This is indicated in the rules by three asterisks (***) following the ***Max # Spans*** number.

Applications: Signal Mix up to 10 Gb/s

Table 5-5 TeraLight™ —L-Band 800G (No Upgrade to 1.6T)

Max # Channels	Channel Plan	Max # Spans	Span Loss (dB) Avg.	Max One Span (dB)	Total Reach (dB) max	Avg. Span (km) max	Total Reach (km) max	Line LBo (dB)	oppc (dBm)
80	A or B	1	34	34	34	130	130	0	3.5
80	A or B	2	32	34	64	120	240	0	3.5
80	A or B	3	30	32	90	115	345	0	3.5
80	A or B	4	28	30	112	105	420	0	3.5
80	A or B	5	27	29	135	100	500	0	3.5

Table 5-5 TeraLight™ —L-Band 800G (No Upgrade to 1.6T) (continued)

Max # Channels	Channel Plan	Max # Spans	Span Loss (dB) Avg.	Max One Span (dB)	Total Reach (dB) max	Avg. Span (km) max	Total Reach (km) max	Line LBo (dB)	oppc (dBm)
80	A or B	6	25	27	150	96	576	0	3.5
80	A or B	7	24	26	168	90	630	0	3.5
64	C or D	8	23	25	184	90	720	2	3.5
64	C or D	9	22	24	198	88	792	2	3.5
64	C or D	10	22	24	220	85	850	2	3.5
64	C or D	11	21	23	231	80	880	2	3.5
64	C or D	12	20	22	240	80	960	2	3.5
32	D	10	25	27	250	85	850	2	6.5

Applications: Signal Mix up to 10 Gb/s

Table 5-6 TeraLight™ —1.6T

Max # Channels		Channel Plan		Max # Spans	Span Loss (dB) Avg.	Max One Span (dB)	Total Reach (dB) max	Avg. Span (km) max	Total Reach (km) max	Line LBO (dB)	oppc (dBm)	
L-Band	C-Band	L-Band	C-Band								L-Band	C-Band
80	80	A	A or B	1*	29	29	29	130	130	0	3.5	3.5
80	80	A	A or B	2*	29	29	58	120	240	0	3.5	3.5
80	80	A	A or B	3	27	29	81	110	330	0	3.5	3.5
80	80	A	A or B	4	25	28	100	105	420	0	3.5	3.5
80	80	A	A or B	5	24	27	120	100	500	0	3.5	3.5
80	80	A	A or B	6	22	25	132	100	600	0	3.5	3.5
80	64	A	C or D	3	28	29	84	115	345	0	3.5	4.5
80	64	A	C or D	4	26	28	104	105	420	0	3.5	4.5
80	64	A	C or D	5	25	27	125	100	500	0	3.5	4.5
80	64	A	C or D	6	23	25	138	96	576	0	3.5	4.5

Notes:

1. Spans followed by a single asterisk (*) indicate that the span loss values are limited by the L-Band SUPVY circuit pack.

□

Engineering Rules for TrueWave RS

Applications: Signal Mix up to 10 Gb/s

Table 5-7 Truewave RS—C-Band 800G (No Upgrade to 1.6T)

Max # Channels	Channel Plan	Max # Spans	Span Loss (dB) Avg.	Max One Span (dB)	Total Reach (dB) max	Avg. Span (km) max	Total Reach (km) max	Line LBO (dB)	oppc (dBm)
80	A or B	1 ** *	33	33	33	130	130	0	3.5
80	A or B	2 ** *	30	32	60	120	240	1	3.5
80	A or B	3	28	30	84	115	345	1	3.5
80	A or B	4	27	29	108	110	440	1	3.5
80	A or B	5	26	28	130	100	500	1	3.5
80	A or B	6	24	26	144	96	576	1	3.5
80	A or B	7	23	25	161	96	672	1	3.5
64	C or D	8	23	25	184	90	720	2	3.5
64	C or D	9	22	24	198	90	810	2	3.5
64	C or D	10	22	24	220	90	900	2	3.5
64	C or D	11	21	23	231	85	935	2	3.5
64	C or D	12	20	22	240	85	1020	2	3.5
32	D	10	25	27	250	90	900	2	6.5
32	D	12	24	26	288	85	1020	2	6.5

Notes:

1. In C-band configurations, SUPV3 pack is required when (Span Loss + Line LBO) ≥ 32 dB. This is indicated in the rules by three asterisks (***) following the ***Max # Spans*** number.

Applications: Signal Mix up to 10 Gb/s

Table 5-8 Truewave® RS—L-Band 800G (No Upgrade to 1.6T)

Max # Channels	Channel Plan	Max # Spans	Span Loss (dB) Avge	Max One Span (dB)	Total Reach (dB) max	Avg. Span (km) max	Total Reach (km) max	Line LBo (dB)	oppc (dBm)
80	A	1 *	32	32	32	130	130	0	3.5
80	A	2 *	30	31	60	120	240	1	3.5
80	A	3	28	30	84	115	345	1	3.5
80	A	4	27	29	108	110	440	1	3.5

Table 5-8 Truewave® RS—L-Band 800G (No Upgrade to 1.6T) (continued)

Max # Channels	Channel Plan	Max # Spans	Span Loss (dB) Avge	Max One Span (dB)	Total Reach (dB) max	Avg. Span (km) max	Total Reach (km) max	Line LBo (dB)	oppc (dBm)
80	A	5	26	28	130	110	550	1	3.5
80	A	6	24	26	144	105	630	1	3.5
80	A	7	23	25	161	100	700	1	3.5
64	B	8	23	25	184	100	800	2	3.5
64	B	9	22	24	198	96	864	2	3.5
64	B	10	22	24	220	96	960	2	3.5
64	B	11	21	23	231	90	990	2	3.5
64	B	12	21	23	252	85	1020	2	3.5
32	B	10	25	27	250	96	960	2	6.5
32	B	12	24	26	288	85	1020	2	6.5

Notes:

1. Spans followed by a single asterisk (*) indicate that the span loss values are limited by the L-Band SUPVY circuit pack.

Applications: Signal Mix up to 10 Gb/s

Table 5-9 Truewave RS—1.6T

Max # Channels		Channel Plan		Max # Spans	Span Loss (dB) Avg.	Max One Span (dB)	Total Reach (dB) max	Avg. Span (km) max	Total Reach (km) max	Line LBO (dB)	oppc (dBm)	
L-Band	C-Band	L-Band	C-Band								L-Band	C-Band
80	80	A	A or B	1*	29	29	29	130	130	0	3.5	3.5
80	80	A	A or B	2*	28	29	58	120	240	0	3.5	3.5
80	80	A	A or B	3*	26	29	81	115	345	0	3.5	3.5
80	80	A	A or B	4	25	28	104	110	440	0	3.5	3.5
80	80	A	A or B	5	24	27	125	100	500	0	3.5	3.5
80	80	A	A or B	6	22	25	138	96	576	0	3.5	3.5
80	64	A	C or D	3*	28	29	81	115	345	0	3.5	4.5
80	64	A	C or D	4	26	28	104	110	440	0	3.5	4.5
80	64	A	C or D	5	25	27	125	100	500	0	3.5	4.5
80	64	A	C or D	6	23	25	138	96	576	0	3.5	4.5

Notes:

1. Spans followed by a single asterisk (*) indicate that the span loss values are limited by the L-Band SUPVY circuit pack.

□

Engineering Rules for TrueWave® Classic

Applications: Signal Mix up to 10 Gb/s

Table 5-10 TrueWave® Classic—C-Band 800G (No Upgrade to 1.6T)[1]

Max # Channels	Channel Plan	Max # Spans	Span Loss (dB) Avg.	Max One Span (dB)	Total Reach (dB) max	Avg. Span (km) max	Total Reach (km) max	Line LBO (dB)	oppc (dBm)
40	E or F	1***	32	32	32	130	130	0	3.5
40	E or F	2***	29	31	58	120	240	2	3.5
40	E or F	3	27	29	81	115	345	2	3.5
40	E or F	4	26	28	104	110	440	2	3.5
40	E or F	5	24	26	120	100	500	2	3.5
40	E or F	6	23	25	138	96	576	2	3.5
40	E or F	7	23	25	161	96	672	2	3.5
40	E or F	8	22	24	176	90	720	3	3.5
40	E or F	9	22	24	198	90	810	3	3.5
40	E or F	10	22	24	220	90	900	3	3.5
40	E or F	11	21	23	231	85	935	3	3.5
40	E or F	12	20	22	240	85	1020	3	3.5
20	F	10	25	27	250	90	900	3	6.5
20	F	12	24	26	288	85	1020	3	6.5

Notes:

1. The maximum number of channels is based on the minimum (worst case) dispersion constant D (ps/nm * km) of 0.10 at 1530 nm. More channels can be allowed if the dispersion is more than the minimum specified here; please contact your Customer Team for more information.
2. In C-band configurations, SUPV3 pack is required when (Span Loss + Line LBO) ≥ 32 dB. This is indicated in the rules by three asterisks (***) following the ***Max # Spans*** number.

Applications: Signal Mix up to 10 Gb/s.

Table 5-11 TrueWave Classic—L-Band 800G (No Upgrade to 1.6T)

Max # Channels	Channel Plan	Max # Spans	Span Loss (dB) Avg.	Max One Span (dB)	Total Reach (dB) max	Avg. Span (km) max	Total Reach (km) max	Line LBO (dB)	oppc (dBm)
80	A	1	32	32	32	130	130	0	3.5
80	A	2	30	31	60	120	240	1	3.5
80	A	3	28	30	84	115	345	1	3.5
80	A	4	27	29	108	110	440	1	3.5
80	A	5	25	27	125	105	525	2	3.5
80	A	6	24	26	144	105	630	2	3.5
80	A	7	23	25	161	100	700	2	3.5
64	B	8	23	25	184	100	800	2	3.5
64	B	9	22	24	198	96	864	2	3.5
64	B	10	22	24	220	96	960	2	3.5
64	B	11	21	23	231	90	990	3	3.5
64	B	12	20	22	240	85	1020	3	3.5
32	B	10	25	27	250	96	960	3	6.5
32	B	12	24	26	288	85	1020	3	6.5

Applications: Signal Mix up to 10 Gb/s

Table 5-12 TrueWave® Classic—1.6T Configuration

Max # Channels		Channel Plan		Max # Spans	Span Loss (dB) Avg.	Max One Span (dB)	Total Reach (dB) max	Avg. Span (km) max	Total Reach (km) max	Line LBO (dB)	oppc (dBm)	
L-Band	C-Band	L-Band	C-Band								L-Band	C-Band
80	40	A	E or F	1*	29	29	29	125	125	0	3.5	3.5
80	40	A	E or F	2*	28	29	56	120	240	0	3.5	3.5
80	40	A	E or F	3	26	28	78	115	345	0	3.5	3.5
80	40	A	E or F	4	25	27	100	110	440	1	3.5	3.5
80	40	A	E or F	5	23	25	115	100	500	1	3.5	3.5
80	40	A	E or F	6	22	24	132	96	576	1	3.5	3.5

Notes:

1. Spans followed by a single asterisk (*) indicate that the span loss values are limited by the L-Band SUPVY circuit pack.

□

Engineering Rules for TrueWave® Plus

Applications: Signal Mix up to 10 Gb/s

Table 5-13 TrueWave® Plus— 800G L-Band (No Upgrade to 1.6T)

Max # Channels	Channel Plan	Max # Spans	Span Loss (dB) Avg.	Max One Span (dB)	Total Reach (dB) max	Avg. Span (km) max	Total Reach (km) max	Line LBO (dB)	oppc (dBm)
80	A	1	32	32	32	130	130	0	3.5
80	A	2	30	31	60	120	240	1	3.5
80	A	3	28	30	84	115	345	1	3.5
80	A	4	27	29	108	110	440	1	3.5
80	A	5	25	27	125	105	525	2	3.5
80	A	6	24	26	144	105	630	2	3.5
80	A	7	23	25	161	100	700	2	3.5
64	B	8	23	25	184	100	800	2	3.5
64	B	9	22	24	198	96	864	2	3.5
64	B	10	22	24	220	96	960	2	3.5
64	B	11	21	23	231	90	990	3	3.5
64	B	12	20	22	240	85	1020	3	3.5
32	B	10	25	27	250	96	960	3	6.5
32	B	12	24	26	288	85	1020	3	6.5

Applications: Signal Mix up to 10 Gb/s

Table 5-14 TrueWave® Plus—800G C-Band (No Upgrade to 1.6T)

Max # Channels	Channel Plan	Max # Spans	Span Loss (dB) Avg.	Max One Span (dB)	Total Reach (dB) max	Avg. Span (km) max	Total Reach (km) max	Line LBO (dB)	oppc (dBm)
80	A or B	1 * * *	32	32	32	130	130	0	3.5
80	A or B	2 * * *	29	31	58	120	240	2	3.5
64	C or D	3	27	29	81	115	345	2	3.5
64	C or D	4	26	28	104	110	440	2	3.5
64	C or D	5	24	26	120	100	500	2	3.5
64	C or D	6	23	25	138	96	576	2	3.5
64	C or D	7	23	25	161	96	672	2	3.5
40	E or F	8	22	24	176	90	720	3	3.5

Table 5-14 TrueWave® Plus—800G C-Band (No Upgrade to 1.6T) (continued)

Max # Channels	Channel Plan	Max # Spans	Span Loss (dB) Avg.	Max One Span (dB)	Total Reach (dB) max	Avg. Span (km) max	Total Reach (km) max	Line LBO (dB)	oppc (dBm)
40	E or F	9	22	24	198	90	810	3	3.5
40	E or F	10	22	24	220	90	900	3	3.5
40	E or F	11	21	23	231	85	935	3	3.5
40	E or F	12	20	22	240	85	1020	3	3.5
20	F	10	25	27	250	90	900	3	6.5
20	F	12	24	26	288	85	1020	3	6.5

Notes:

1. In C-band configurations, SUPV3 pack is required when (Span Loss + Line LBO) ≥32 dB. This is indicated in the rules by three asterisks (***) following the ***Max # Spans*** number.

Applications: Signal Mix up to 10 Gb/s

Table 5-15 TrueWave® Plus—1.6T

Max # Channels		Channel Plan		Max # Spans	Span Loss (dB) Avg.	Max One Span (dB)	Total Reach (dB) max	Avg. Span (km) max	Total Reach (km) max	Line LBO (dB)	oppc (dBm)	
L-Band	C-Band	L-Band	C-Band								L-Band	C-Band
80	80	A	A or B	1 *	29	29	29	125	125	0	3.5	3.5
80	80	A	A or B	2 *	28	29	56	120	240	0	3.5	3.5
80	64	A	C or D	3	26	28	78	115	345	0	3.5	3.5
80	64	A	C or D	4	25	27	100	110	440	1	3.5	3.5
80	64	A	C or D	5	23	25	115	100	500	1	3.5	3.5
80	64	A	C or D	6	22	24	132	96	576	1	3.5	3.5

Notes:

1. Spans followed by a single asterisk (*) indicate that the span loss values are limited by the L-Band SUPVY circuit pack.

□

Engineering Rules for Corning E-LEAF™

Applications: Signal Mix up to 10 Gb/s

Table 5-16 Corning E-Leaf —800G L-Band (No Upgrade to 1.6T)

Max # Channels	Channel Plan	Max # Spans	Span Loss (dB) Avg.	Max One Span (dB)	Total Reach (dB) max	Avg. Span (km) max	Total Reach (km) max	Line LBO (dB)	oppc (dBm)
80	A	1 *	32	32	32	125	125	0	3.5
80	A	2 *	32	32	64	120	240	0	3.5
80	A	3	30	32	90	110 * *	330	0	3.5
80	A	4	28	30	112	105 * *	420	0	3.5
80	A	5	27	29	135	95	475	1	3.5
80	A	6	25	27	150	95	570	1	3.5
80	A	7	24	26	168	90	630	2	3.5
64	B	8	23	25	184	90	720	2	3.5
64	B	9	22	24	198	90	810	2	3.5
64	B	10	22	24	220	85	850	2	3.5
64	B	11	21	23	231	80	880	2	3.5
64	B	12	21	23	252	80	960	2	3.5
32	B	10	25	27	250	85	850	2	6.5
32	B	12	24	26	288	80	960	2	6.5

Notes:

1. Spans followed by a single asterisk (*) indicate that the span loss values are limited by the L-Band SUPVY circuit pack.
2. The distances followed by two asterisks (**) indicate that these distances are limited due to dispersion compensation requirements.

Applications: Signal Mix up to 10 Gb/s

Table 5-17 Corning E-Leaf – 800G C-Band (No Upgrade to 1.6T)

Max # Channels	Channel Plan	Max # Spans	Span Loss (dB) Average	Max One Span (dB)	Total Reach (dB) max	Avg. Span (km) max	Total Reach (km) max	Line LBO (dB)	oppc (dBm)
80	A or B	1 * * *	34	34	34	130	130	0	3.5
80	A or B	2 * * *	32	34	64	120	240	0	3.5
80	A or B	3 * * *	30	32	90	115	345	0	3.5

Table 5-17 Corning E-Leaf – 800G C-Band (No Upgrade to 1.6T) (continued)

Max # Channels	Channel Plan	Max # Spans	Span Loss (dB) Average	Max One Span (dB)	Total Reach (dB) max	Avg. Span (km) max	Total Reach (km) max	Line LBO (dB)	oppc (dBm)
80	A or B	4	28	30	112	110	440	0	3.5
80	A or B	5	27	29	135	90	450	0	3.5
80	A or B	6	25	27	150	85	510	0	3.5
80	A or B	7	24	26	168	85	595	0	3.5
40	E or F	8	23	25	184	90	720	2	3.5
40	E or F	9	22	24	198	90	810	2	3.5
40	E or F	10	22	24	220	85	850	2	3.5
40	E or F	11	21	23	231	80	880	2	3.5
40	E or F	12	20	22	240	80	960	2	3.5
20	F	10	25	27	250	85	850	2	6.5
20	F	12	24	26	288	80	960	2	6.5

Notes:

1. In C-band configurations, SUPV3 pack is required when (Span Loss + Line LBO) ≥32 dB. This is indicated in the rules by three asterisks (***) following the ***Max # Spans*** number.

Applications: Signal Mix up to 10 Gb/s

Table 5-18 Corning E-Leaf —1.6T

Max # Channels		Channel Plan		Max # Spans	Span Loss (dB) Avg.	Max One Span (dB)	Total Reach (dB) max	Avg. Span (km) max	Total Reach (km) max	Line LBO (dB)	oppc (dBm)	
L-Band	C-Band	L-Band	C-Band								L-Band	C-Band
80	80	A	A or B	1 *	29	29	29	125	125	0	3.5	3.5
80	80	A	A or B	2 *	29	29	58	120	240	0	3.5	3.5
80	80	A	A or B	3 *	27	29	81	115	345	0	3.5	3.5
80	80	A	A or B	4	25	28	104	110	440	0	3.5	3.5
80	80	A	A or B	5	24	27	125	100	500	0	3.5	3.5
80	80	A	A or B	6	22	25	138	96	576	0	3.5	3.5
80	64	A	C or D	3*	28	29	84	110**	330	0	3.5	4.5
80	64	A	C or D	4	26	28	104	105**	420	0	3.5	4.5
80	64	A	C or D	5	25	27	125	90	450	0	3.5	4.5

Table 5-18 Corning E-Leaf —1.6T (continued)

Max # Channels		Channel Plan		Max # Spans	Span Loss (dB) Avg.	Max One Span (dB)	Total Reach (dB) max	Avg. Span (km) max	Total Reach (km) max	Line LBO (dB)	oppc (dBm)	
80	64	A	C or D	6	23	25	138	85	510	0	3.5	4.5

Notes:

1. Spans followed by a single asterisk (*) indicate that the span loss values are limited by the L-Band SUPVY circuit pack.
2. The distances followed by two asterisks (**) indicate that these distances are limited due to dispersion compensation requirements.

□

Engineering Rules for Corning LEAF ™

Applications: Signal Mix up to 10 Gb/s

Table 5-19 Corning LEAF — 800G L-Band (No Upgrade to 1.6T)

Max # Channels	Channel Plan	Max # Spans	Span Loss (dB) Avg.	Max One Span (dB)	Total Reach (dB) max	Avg. Span (km) max	Total Reach (km) max	Line LBO (dB)	oppc (dBm)
80	A	1 *	32	32	32	125	125	0	3.5
80	A	2 *	32	32	64	120	240	0	3.5
80	A	3	30	32	90	105 * *	315	0	3.5
80	A	4	28	30	112	100 * *	400	0	3.5
80	A	5	27	29	135	90	450	1	3.5
80	A	6	25	27	150	85	510	1	3.5
80	A	7	24	26	168	85	595	2	3.5
64	B	8	23	25	184	85	680	2	3.5
64	B	9	22	24	198	80	720	2	3.5
64	B	10	22	24	220	75	750	2	3.5

Notes:

1. Spans followed by a single asterisk (*) indicate that the span loss values are limited by the L-Band SUPVY circuit pack.
2. The distances followed by two asterisks (**) indicate that these distances are limited due to dispersion compensation requirements.

Applications: Signal Mix up to 10 Gb/s

Table 5-20 Corning LEAF — 800G C-Band (No Upgrade to 1.6T)[1]

Max # Channels	Channel Plan	Max # Spans	Span Loss (dB) Avg.	Max One Span (dB)	Total Reach (dB) max	Avg. Span (km) max	Total Reach (km) max	Line LBO (dB)	oppc (dBm)
80	A or B	1 * * *	34	34	34	130	130	0	3.5
80	A or B	2 * * *	32	34	64	120	240	0	3.5
64	C or D	3 * * *	30	32	90	115	345	0	3.5
64	C or D	4	28	30	112	110	440	0	3.5
64	C or D	5	27	29	135	90	450	0	3.5
64	C or D	6	25	27	150	85	510	0	3.5
40[1]	E or F	7	24	26	168	90	630	2	3.5

Table 5-20 Corning LEAF — 800G C-Band (No Upgrade to 1.6T)[1] (continued)

Max # Channels	Channel Plan	Max # Spans	Span Loss (dB) Avg.	Max One Span (dB)	Total Reach (dB) max	Avg. Span (km) max	Total Reach (km) max	Line LBO (dB)	oppc (dBm)
40[1]	E or F	8	23	25	184	85	680	2	3.5
40[1]	E or F	9	22	24	198	80	720	2	3.5
40[1]	E or F	10	22	24	220	75	750	2	3.5

Notes:

1. C-Band LEAF fiber applications of 7 to 10 spans require special compensation rules.
2. In C-band configurations, SUPV3 pack is required when (Span Loss + Line LBO) ≥32 dB. This is indicated in the rules by three asterisks (***) following the ***Max # Spans*** number.

Applications: Signal Mix up to 10 Gb/s

Table 5-21 Corning LEAF—1.6T

Max # Channels		Channel Plan		Max # Spans	Span Loss (dB) Avg.	Max One Span (dB)	Total Reach (dB) max	Avg. Span (km) max	Total Reach (km) max	Line LBO (dB)	oppc (dBm)	
L-Band	C-Band	L-Band	C-Band								L-Band	C-Band
80	80	A	A or B	1 *	29	29	29	125	125	0	3.5	3.5
80	80	A	A or B	2 *	28	29	56	120	240	0	3.5	3.5
80	64	A	C or D	3	28	29	84	105 **	315	0	3.5	4.5
80	64	A	C or D	4	26	28	104	100 **	400	0	3.5	4.5
80	64	A	C or D	5	25	27	125	90	450	0	3.5	4.5
80	64	A	C or D	6	23	25	138	85	510	0	3.5	4.5

Notes:

1. Spans followed by a single asterisk (*) indicate that the span loss values are limited by the L-Band SUPVY circuit pack.
2. The distances followed by two asterisks (**) indicate that these distances are limited due to dispersion compensation requirements.

□

Engineering Rules for Corning LS

Applications: Signal Mix up to 10 Gb/s

Table 5-22 Corning LS—800G L-Band (No Upgrade to 1.6T)

Max # Channels	Channel Plan	Max # Spans	Span Loss (dB) Avg.	Max One Span (dB)	Total Reach (dB) max	Avg. Span (km) max	Tota
40	C	1	32	32	32	125	125
40	C	2 *	29	30	58	120	240
40	C	3	27	29	81	115	345
40	C	4	26	28	104	110	440
40	C	5	25	27	125	105	525
40	C	6	23	25	138	100	600
40	C	7	22	24	154	90	630

Notes:

1. Spans followed by a single asterisk (*) indicate that the span loss values are limited by the L-Band SUPVY circuit pack.

Applications: Signal Mix up to 10 Gb/s

Table 5-23 Corning LS—800G C-Band (No Upgrade to 1.6T)

Max # Channels	Channel Plan	Max # Spans	Span Loss (dB) Avg.	Max One Span (dB)	Total Reach (dB) max	Avg. Span (km) max	Total Reach (km) max	Line LBO (dB)	oppc (dBm)
32	G or H	1 * * *	32	32	32	130	130	0	3.5
32	G or H	2 * * *	29	31	58	120	240	2	3.5
32	G or H	3	27	29	81	115	345	2	3.5
32	G or H	4	26	28	104	110	440	2	3.5
32	G or H	5	24	26	120	100	500	2	3.5
32	G or H	6	23	25	138	96	576	2	3.5
32	G or H	7	22	24	154	96	672	2	3.5

Notes:

1. In C-band configurations, SUPVY3 pack is required when (Span Loss + Line LBO) ≥ 32 dB. This is indicated in the rules by three asterisks (***) following the ***Max # Spans*** number.

Applications: Signal Mix up to 10 Gb/s

Table 5-24 Corning LS—1.6T

Max # Channels		Channel Plan		Max # Spans	Span Loss (dB) Avg.	Max One Span (dB)	Total Reach (dB) max	Avg. Span (km) max	Total Reach (km) max	Line LBO (dB)	oppc (dBm)	
L-Band	C-Band	L-Band	C-Band								L-Band	C-Band
40	32	C	G or H	1 *	29	29	29	125	125	0	3.5	3.5
40	32	C	G or H	2 *	28	29	56	120	240	0	3.5	3.5
40	32	C	G or H	3	26	28	78	115	345	0	3.5	3.5
40	32	C	G or H	4	25	27	100	110	440	1	3.5	3.5
40	32	C	G or H	5	23	25	115	100	500	1	3.5	3.5
40	32	C	G or H	6	22	24	132	96	576	1	3.5	3.5

Notes:

1. Spans followed by a single asterisk (*) indicate that the span loss values are limited by the L-Band SUPVY circuit pack.

□

Engineering Rules for Dispersion Shifted Fiber

Applications: Signal Mix up to 10 Gb/s

Table 5-25 DSF— 800G L-Band (No Upgrade to 1.6T)

Max # Channels	Channel Plan	Max # Spans	Span Loss (dB) Avg.	Max One Span (dB)	Total Reach (dB) max	Avg. Span (km) max	Total Reach (km) max	Line LBO (dB)	oppc (dBm)
80	A	1 *	30	30	30	125	125	2	3.5
80	A	2 *	29	30	58	120	240	2	3.5
80	A	3	27	29	81	110	330	2	3.5
80	A	4	26	28	104	100	400	2	3.5
80	A	5	25	27	125	90	450	2	3.5
80	A	6	23	25	138	80	480	3	3.5
80	A	7	22	24	154	75	525	3	3.5

Notes:

1. Spans followed by a single asterisk (*) indicate that the span loss values are limited by the L-Band SUPVY circuit pack.

□

Path Penalties for Polarization Mode Dispersion (PMD) Effects

Overview

Purpose This section explains path penalties for PMD effects, and gives an example calculation for OC-192/STM-64 signals on SSMF.

□

Rules for Allocating Margin for High PMD Fibers

Table 5-24 gives path penalties for PMD effects. Note that the table data is only applicable for OC-192/STM-64 signals.

Table 5-26 Path Penalities for PMD Effects

Mean PMD	Penalty with SFEC 10G OTU	Penalty with Compatible Optics
10 ps	1 dB	2 dB
12 ps	2 dB	3 dB
14 ps	3 dB	4 dB
15 ps	4 dB	5 dB
16 ps	5 dB	7 dB
17 ps	6 dB	9 dB

Notes:

1. If compatible optics receiver uses adaptive threshold algorithm, use penalty for SFEC 10G OTU.

Determining Penalties

1. From the table, determine the penalty required for the measured mean PMD of the configuration. Round up the value of the measured mean PMD to match an entry in the table.
2. Subtract this penalty from the average span loss of the engineering rule being used. In the C-Band, any span under 20 dB must be padded up to 20 dB. In the L-Band, any span under 23 dB must be padded up to 23 dB. The PMD penalty must be subtracted after these spans are rounded up.
3. Subtract this penalty from the maximum one-span value of the engineering rule being used. Note that the maximum one-span value should not be more than 2 dB greater than the average span loss.
4. Determine the total reach (dB) by multiplying the number of spans by the average span loss calculated in Step 2 above. In the C-Band, any span under 20 dB must be padded up to 20 dB. In the L-Band, any span under 23 dB must be padded up to 23 dB.

Example

Given five spans of C-Band 800G on SSMF and a measured mean PMD of 8.5 ps, Span 1: 20 dB; Span 2: 17 dB; Span 3: 22 dB; Span 4: 28 dB; Span 5: 26 dB.

1. First round 8.5 ps up to 10 ps to match an entry in the table above. Thus, the penalty required is 1 dB.
2. Since the five span rule for SSMF 800G is `5 X 27 dB`, subtract 1 dB from the average span loss of 27 dB. Thus, the new rule becomes `5 X 26 dB`, and the average span loss cannot exceed 26 dB. In the above configuration, the average span loss is `(20+20+22+28+26)/5 = 23.2 dB < 26 dB`. Note that Span 2 had to be rounded up to 20 dB.
3. The maximum one span for five spans of 800G on SSMF is 29 dB. Therefore, the new maximum one span value is `29 - 1 = 28 dB`. No single span can exceed this value. No span of the example configuration is greater than 28 dB.
4. Multiply five spans by the 26 dB as determined above in Step 2. `Total Reach = 5 X 26 dB + 130 dB`, and the sum of all five span losses cannot exceed this value. In the example, the total reach is `20+20+22+28+26 = 116 dB < 130 dB`.

Since this example configuration meets all the requirements, it can be designed as such.

□

Dispersion Compensation Rules

Overview

Purpose This section explains the rules for dispersion compensation and gives examples of formulas to use to calculate it. There are separate rules and separate modules for C-Band and L-Band. The rules and modules are not interchangeable. For 1.6T systems, DCM values for the C-Band system must be calculated independently of the L-Band system.

□

General Notes on Dispersion Compensation

Notes for Dispersion Compensation

DCM modules must be calculated for both directions (i.e., east to west and west to east). Note that for the purposes of dispersion compensation, the full add/drop ring terminal should be considered as two end (back to back) terminals. With a few exceptions that will be noted within this section, WAD Type 2 terminals should also be considered as two end (back-to-back) terminals.

1. There are separate rules and separate modules for C-Band and L-Band. These rules and modules cannot be interchanged. For 1.6T systems, DCM values for the C-Band system must be calculated independently of the L-Band system.
2. DCM modules must be calculated for both directions (east ->west and west->east). For a particular node, this value will not necessarily be the same in both directions.
3. For the purpose of dispersion compensation, the full add/drop ring terminal should be considered as two end terminals. That is, calculate pre compensation for transmit OAs and post compensation for receive OAs. The error from the post compensation at the ring terminal should be dropped.
4. For the purpose of dispersion compensation, WAD Type 2 terminals should also be considered as two end terminals with a few exceptions. Still calculate pre-compensation for transmit OAs and post-compensation for receive OAs, but the total number of physical spans from regenerator to regenerator should be used to determine the appropriate compensation scheme. The error calculated from the post compensation at the WAD terminal should not be carried further down the link. However, this error (from the WAD) should be added to the error at the end of the link to ensure that the total residual dispersion has not exceeded its limit. (WAD only applies to C-Band systems.
5. The compensation required at a Type 1 WAD is the same as for a repeater. (WAD only applies to C-Band systems).

□

Dispersion Compensation Rules for the OLS 1.6T

Tables for C-Band DCMs

The tables that follow give information on C-Band DCM Rules for SSMF, TWRS, TWC, TW+, E-LEAF, and LEAF. Standard applications and long-reach application values are given. (Tables for L-Band DCM Rules will immediately follow the tables shown for C-Band configurations.)

Table 5-27 DC Rules - Standard Applications (Up To Seven Spans)

Rate	Link Dispersion @1546nm (ps/nm)	Fiber Type	Pre-comp @1546 ps/nm	Line Comp @1546 ps/nm	Post- comp @1546 ps/nm
OC-192/STM-64	<850	All	None Required		
	>850	SSMF	35%	92%	57%
	>850	TWRS, TWC, TW+, E-LEAF, LEAF	0%	85%	85%
Note: For 7 spans on LEAF fiber, use the values indicated in Table 5-37, ″DC Rules - Long-Reach Applications for Eight to 12 Spans″ (5-37).					

Table 5-28 DC Rules - Long-Reach Applications (Eight to 12 Spans)

Rate	Link Dispersion @1546nm (ps/nm)	Fiber Type	Pre-comp @1590 ps/nm	Line Comp @1590ps/nm	Post- comp @1590 ps/nm
OC-192/STM-64	<850	All	None Required		
	>850	SSMF	40%	97%	57%
	>850	TWRS	0%	90%	90%
	>850	TWC, TW+, E-LEAF	0%	100%	100%
	>850	LEAF 7 and 8 spans	0%	100%	100%
	>850	LEAF 9 and 10 spans	0%	105%	105%

DCM Rules for C-Band for OC-192/STM-64 or Mixed and Lower Bit Rates

For OC-192 or mixed OC-192 and lower bit rates transmission, the required pre-, line-, and post-DCM can be calculated as:

For SSMF: PRE= $DCreq_i = -0.57*L_{i-1} *D - 0.35 * {}_i$; for i = 1 to n+ 1

$Error_i = DCreq_i - DCMused_i$

For TWRS, TWC, TW+, E-EAF, LEAF:

$DCM_{i+1} = -0.85*L_i* D + Error_i$; for i = 1 to n + 1

$Error_i = DCreq_i - DCMused_i$

where

n is the number of spans in a link

L_i is the length of the ith span

D is the dispersion of the fiber.

L_0 and L_{n+1} are assumed to be zero. $DCreq_i$ and $DCreq_{n+1}$ are the required values of pre- and post compensation, while $DCreq_2$ to $DCreq_n$ are the required line compensation. $DCMused_i$ is the sum of the dispersion values of the selected modules. One or two DCM modules should be chosen such that the absolute value of the dispersion of the modules is as close to the absolute value of the required dispersion without exceeding it. $Error_i$ accounts for the granularity of the DCM modules. $Error_i$ should always be negative, indicating slight under-compensation. Please refer to the tables that follow for data on DCM modules. For applications with eight or more spans, substitute the appropriate percentages into the formulas above.

The dispersion and insertion loss values below are listed for information only. Each Dispersion Compensation Module (DCM) is accompanied with its own specification sheet.

Table 5-29 C-Band Dispersion by Fiber Type

Fiber Type	Mean Dispersion @1546 nm (ps/nm * km)	Dispersion Slope (ps/nm^2 * km)
SSMF	16.7	0.055
TeraLight	7.768	0.058
TW-Classic	2.42	0.07
TWRS	4.24	0.045
E-LEAF	3.87	0.087
TW+	3.45	0.068
LEAF	3.34	0.108

Data for C-Band Dispersion Compensation Modules (DCMs)

The dispersion and insertion loss values below are listed for information only. Each Dispersion Compensation Module (DCM) is accompanied with its own specification sheet.

Table 5-30 C-Band Dispersion Compensation Module Data

DCMs	Dispersion @1546 nm (ps/nm)	Maximum Insertion Loss (dB, EOL)	Insertion Loss Measured (mean+3s) (dB)*
DCM-2.5	-41	<2.2	2.1
DCM-5	-81	<2.3	2.3
DCM-7.5	-121	<2.5	2.4
DCM-10	-162	<2.7	2.7
DCM-20	-325	<3.5	3.6
DCM-30	-487	<4.5	4.8
DCM-40	-650	<5.5	5.6
DCM-50	-812	<6.5	6.5
DCM-60	-974	<7.5	7.6
DCM-70	-1137	<8.5	8.7
DCM-80	-1299	<9.5[a]	9.4
DCM-90	-1462	<10.5	10.0
DCM-100	-1624	<11	TBD

* This measured loss does not include the other connector loss (that is, 0.1 dB type, 0.25dB).

[a] When DCM is required, DCM insertion loss at the DCM port should be limited to 10dB. If DCM-90 or DCM-100 is used, the loss can be increased to 11 dB.

The table that follows gives information on C-Band DCM Rules for Corning LS fiber. Standard application values are given.

Table 5-31 Corning LS DC Rules - Standard Application (Up To Seven Spans)

Rate	Link Dispersion @1538 nm (ps/nm)	Fiber Type	Pre-comp @1538 ps/nm	Line Comp @1538 ps/nm	Post- comp @1538 ps/nm
OC-192/STM-64	>-200	LS	None Required		
	<-200	LS	100%	100%	0%

For LS fiber, the nominal value for dispersion is D= -2.33 ps nm $_{-1}$km^{-1}@ 1538 nm.

For OC-192/STM-64 or mixed OC-192/STM-64 and lower bit rates transmission, the required pre- and line- DCM for seven spans or less can be calculated as follows:

For Corning LS: $DCreq_i = L_i * D + Error_{i-1}$; for i=1 to n + 1

$Error_i = DCreq_i - DCMused_i$

where

n is the number of spans in a link, L_i is the length of the ith span, and D is the dispersion of the fiber. L_0 and L_{n+1} are assumed to be 0. $DCreq_1$ and $DCreq_{n+1}$ are the required values for pre- and post-compensation, while $DCreq_2$ to $DCreq_n$ are the required line compensation. $DCMused_i$ is the sum of the dispersion values of the selected modules. One or two DCM modules should be chosen such that the absolute value of the dispersion of the modules is greater than or equal to the absolute value of the required dispersion. $Error_i$ accounts for the granularity of the DCM modules. $Error_i$ accounts for the granularity of the DCM modules. $Error_i$ should always be negative, indicating slight overcompensation. Please refer to Table 5-35, ″Corning LS Dispersion Compensation Module Data″ (5-40), for data on DCM modules.

The dispersion and insertion loss values below are listed for information only. Each Dispersion Compensation Module (DCM) is accompanied with its own specification sheet.

Table 5-32 Corning LS Dispersion Compensation Module Data

DCMs	Dispersion @1538nm (ps/nm)	Maximum Insertion Loss (dB, EOL)	Insertion Loss Measured (mean+3s) (dB)
DCMLS40	130	2.5	TBD
DCMLS60	195	3.2	TBD
Notes: When DCM is required, the maximum allowable DCM insertion loss at the DCM port is 10.0 dB.This measured loss does not include the other connector loss (0.1 dB typical, 0.25dB worst case).			

C-Band DCM LBO Rules

For span losses between 20 to 25 dB, the following formula should be applied:

$$LBO_{DCM} = 9\ dB - DCM_{LOSS}$$

For span losses between 25 to 33 dB, the following formula should be applied:

$$LBO_{DCM} = (34 - \text{total span loss}) - DCM_{LOSS}$$

The total span loss includes Line LBOs and CLSC if used. If the value calculated above is less than zero, then $LBO_{DCM} = 0\ dB$.

Tables for L-Band DCM Rules

The tables that follow give rules for L-Band dispersion compensation.

Table 5-33 L-Band DCM Rules - Standard Applications (One Span)

Rate	Link Dispersion @1546nm (ps/nm)	Fiber Type	Pre-comp @1590 ps/nm	Post-comp @1590 ps/nm
OC-192/STM-64	<850	All	None Required	
	—	LS, DSF	None Required	
	>850	TWRS, TWC, TW+, E-LEAF, LEAF	30%	55%

Table 5-34 L-Band DCM Rules - Standard Applications (Two to Six Spans)

Rate	Link Dispersion @1546nm (ps/nm)	Fiber Type	Pre-comp @1590 ps/nm	Line Comp @1590ps/nm	Post- comp @1590 ps/nm
OC-192/STM-64	<850	All	None Required		
	>850	LS, DSF (Up to 7 Spans)	0%	85%	85%
	>850	TWRS, TWC, TW+, E-LEAF, LEAF	35%	85%	85%

Table 5-35 L-Band DCM Rules - Standard Applications (Seven to 12 Spans)

Rate	Link Dispersion @1590 nm (ps/nm)	Fiber Type	Pre-comp @1590 ps/nm	Line Comp @1590 ps/nm	Post-comp @1590 ps/nm
OC-192/STM-64	<850	All	None Required		
	>850	E-LEAF	35%	92%	92%
	>850	TWRS, TWC, TW+, LEAF	35%	90%	90%

Table 5-36 L-Band DCM Rules - SSMF Applications

Rate	Link Dispersion @1592 nm (ps/nm)	Number of Spans	Pre-comp @1592 ps/nm	Line Comp @1592 ps/nm	Post-comp @1592 ps/nm
OC-192/STM-64	<850	All	None Required		
		1	30%	not applicable	55%
	>850	2 to 5	35%	85%	85%
		6 to 12	35%	93%	93%

For TW fibers, the largest DCM that can be installed for pre-compensation is DCM-NZDSFL40. For LEAF fibers, the largest DCM that can be installed for precompensation is DCM-NZDSFL50. For all fibers, the largest DCM that can be installed for line and

post-compensation is DCM-NZDSFL100. Refer to Table 5-34, ″L-Band DCM Data″ (5-42), for DCM module data.

The dispersion and insertion loss values below are listed for information only. Each Dispersion Compensation Module (DCM) is accompanied with its own specification sheet.

Table 5-37 L-Band DCM Data

DCMs	Dispersion @1590 nm (ps/nm)	Maximum Insertion Loss (dB, EOL)	Insertion Loss Measured (mean+3 sigma) (dB)
DCM-NZDSFL10	-61	<2.5	TBD
DCM-NZDSFL20	-121	<2.9	TBD
DCM-NZDSFL30	-182	<3.2	TBD
DCM-NZDSFL40	-242	<3.5	TBD
DCM-NZDSFL50	-302	<3.7	TBD
DCM-NZDSFL60	-363	<4.1	TBD
DCM-NZDSFL70	-424	<4.3	TBD
DCM-NZDSFL80	-484	<4.6	TBD
DCM-NZDSFL90	-545	<5.0	TBD
DCM-NZDSFL100	-605	<5.3	TBD

Notes:

1. When DCM is required, DCM insertion loss at the DCM port should be limited to 4.5 dB. If a DCM-NZSFL80, 90, or 100 is used, the loss can be increased to 5.3 dB. Thus, only one DCM can be placed at each OA.

L-Band DCM LBO Rules

For span losses between 23 to 28 dB, the following formula should be applied:

LBO_{DCM}= 4 dB - DCM_{LOSS}

For span losses between 28 to 32 dB, the following formula should be applied:

LBO_{DCM}= (32 - total span loss) - DCM_{LOSS}

The total span loss includes Line LBOs and CLSC if used. If the value calculated above is less than zero, then LBO_{DCM}= 0 dB.

L-Band DCM LBO Rules for SSMF-L

For span losses between 20 to 25 dB, the following formula should be applied:

LBO_{DCM}= 9 dB - DCM_{LOSS}

For span losses between 25 to 32 dB, the following formula should be applied:

LBO_{DCM}= (33 - total span loss) - DCM_{LOSS}

The total span loss includes Line LBOs and CLSC if used. If the value calculated above is less than zero, then LBO_{DCM}= 0 dB.

DCM Rules for L-Band for OC-192/STM-64 or Mixed and Lower Bit Rates

For OC-192 or mixed OC-192 and lower bit rates transmission, the required pre-, line-, and post-DCM can be calculated as:

For One Span on TWRS, TWC, TW+, E-LEAF, or LEAF: PRE= $DCreq_i$= $-0.3*L_{i-1}*D$; for i = 1

$Error_i$= $DCreq_i$ - $DCMused_i$

POST= $DCreq_{i+1}$= $-0.55*L_i*D + Error_i$; for i = 1

For Two to Six Spans on TWRS, TWC, TW+, E-EAF, LEAF:

PRE= DCM_i= -0.35*Lavg* D; for i = 1

LINE and POST= $DCreq_i$= $-0.85*L_{-1}*D + Error_{i-1}$; for i = 2 to n+1

$Error_i$= $DCreq_i$-$DCMused_i$

where

n is the number of spans in a link

L_i is the length of the ith span

D is the dispersion of the fiber.

$L_0$and L_{n+1} are assumed to be zero. $DCreq_i$ and $DCreq_{n+1}$ are the required values of pre- and post compensation, while $DCreq_2$ to $DCreq_n$are the required line compensation. $DCMused_i$ is the sum of the dispersion values of the selected modules. One or two DCM modules should be chosen such that the absolute value of the dispersion of the modules is as close to the absolute value of the required dispersion without exceeding it. $Error_i$ accounts for the granularity of the DCM modules. $Error_i$ should always be negative indicating slight under-compensation. For seven to twelve spans, substitute the appropriate percentages into the formulas above (for two to six spans). $Error_i$ should always be negative, indicating slight under-compensation. Please refer to the tables that follow for data on DCM modules. For the purpose of dispersion compensation, the full

add/drop ring terminal should be considered as two end terminals (i.e., calculate pre-compensation for transmit OAs and post compensation for receive OAs).

The dispersion and insertion loss values below are listed for information only. Each Dispersion Compensation Module (DCM) is accompanied with its own specification sheet.

Table 5-38 L-Band Dispersion by Fiber Type

Fiber Type	Mean Dispersion @1590 nm (ps/nm * km)	Dispersion Slope (ps/nm^2 * km)
DSF	2.80	0.075
TW-Classic	5.50	0.07
TWRS	6.21	0.045
E-LEAF	7.70	0.087
TW+	6.44	0.068
LEAF	8.09	0.108
SSMF	19.07	0.0529

The dispersion and insertion loss values below are listed for information only. Each Dispersion Compensation Module (DCM) is accompanied with its own specification sheet.

Table 5-39 L-Band Dispersion for Fiber Type LS

Fiber Type	Mean Dispersion @1599 nm (ps/nm * km)	Dispersion Slope (ps/nm^2 * km)
LS	1.98	0.07

Data for L-Band Dispersion Compensation Modules (DCMs)

The dispersion and insertion loss values below are listed for information only. Each Dispersion Compensation Module (DCM) is accompanied with its own specification sheet.

Table 5-40 L-Band Dispersion Compensation Module Data

DCMs	Dispersion @1590 nm (ps/nm)	Maximum Insertion Loss (dB, EOL)	Insertion Loss Measured (mean+3δ) (dB)
DCM-NZDSFL5	-30	<2.3	TBD
DCM-NZDSFL10	-61	<2.5	TBD
DCM-NZDSFL20	-121	<2.9	TBD
DCM-NZDSFL30	-182	<3.2	TBD
DCM-NZDSFL40	-242	<3.5	TBD

Table 5-40 L-Band Dispersion Compensation Module Data (continued)

DCMs	Dispersion @1590 nm (ps/nm)	Maximum Insertion Loss (dB, EOL)	Insertion Loss Measured (mean+3δ) (dB)
DCM-NZDSFL50	-302	<3.7	TBD
DCM-NZDSFL60	-363	<4.1	TBD
DCM-NZDSFL70	-424	<4.3	TBD
DCM-NZDSFL80	-484	<4.6	TBD
DCM-NZDSFL90	-545	<5.0	TBD
DCM-NZDSFL100	-605	<5.3	TBD

Notes:

1. The dispersion and insertion loss values are listed for information purposes only. Each DCM module is accompanied by its own specifications information.
2. When DCM is required, the DCM insertion loss at the DCM port should be limited to 4.5 dB. If a DCM-NZDSFL80, DCM-NZDSFL90, or a DCM-NZDSFL100 is used, the loss can be increased to 5.3 dB. Thus, only one DCM can be placed at each OA.

The dispersion and insertion loss values below are listed for information only. Each Dispersion Compensation Module (DCM) is accompanied with its own specification sheet.

Table 5-41 L-Band SSMF DCM Data

DCMs	Dispersion @1592 nm (ps/nm)	Maximum Insertion Loss (dB, EOL)	Insertion Loss Measured (mean+3δ) (dB)
DCM-SSMF-L2.5	-39	<2.4	TBD
DCM-SSMF-L5	-86	<2.6	TBD
DCM-SSMF-L7.5	-134	<2.8	TBD
DCM-SSMF-L10	-185	<3	TBD
DCM-SSMF-L20	-368	<3.9	TBD
DCM-SSMF-L30	-553	<4.8	TBD
DCM-SSMF-L40	-737	<5.6	TBD
DCM-SSMF-L50	-931	<6.6	TBD
DCM-SSMF-L60	-1117	<7.5	TBD
DCM-SSMF-L70	-1298	<8.4	TBD
DCM-SSMF-L80	-1489	<9.3	TBD
DCM-SSMF-L90	-1675	<10.1	TBD

Table 5-41 L-Band SSMF DCM Data (continued)

DCMs	Dispersion @1592 nm (ps/nm)	Maximum Insertion Loss (dB, EOL)	Insertion Loss Measured (mean+3δ) (dB)
DCM-SSMF-L100	-1861	<11.0	TBD

Notes:

1. The dispersion and insertion loss values are listed for information purposes only. Each DCM module is accompanied by its own specifications information.
2. When DCM is required, the DCM insertion loss at the DCM port should be limited to 10 dB. If a DCM-SSMF-L90 or DCM-SSMF-L100 is used, the loss can be increased to 11 dB.

For LS fiber, the nominal value for dispersion is D= -2.33 ps nm $^{-1}$km^{-1}@ 1538 nm.

For OC-192/STM-64 or mixed OC-192/STM-64 and lower bit rates transmission, the required pre- and line- DCM for seven spans or less can be calculated as follows:

For Corning LS: $DCreq_i = L_i * D + Error_{i-1}$; for i=1 to n + 1

$Error_i = DCreq_i - DCMused_i$

where

n is the number of spans in a link, L_i is the length of the ith span, and D is the dispersion of the fiber. L_0 and L_{n+1} are assumed to be 0. $DCreq_1$ and $DCreq_{n+1}$ are the required values for pre- and post-compensation, while $DCreq_2$ to $DCreq_n$ are the required line compensation. $DCMused_i$ is the sum of the dispersion values of the selected modules. One or two DCM modules should be chosen such that the absolute value of the dispersion of the modules is greater than or equal to the absolute value of the required dispersion. $Error_i$ accounts for the granularity of the DCM modules. $Error_i$ accounts for the granularity of the DCM modules. $Error_i$ should always be negative, indicating slight overcompensation. Please refer to Table 5-35, ″Corning LS Dispersion Compensation Module Data″ (5-40), for data on DCM modules.

The dispersion and insertion loss values below are listed for information only. Each Dispersion Compensation Module (DCM) is accompanied with its own specification sheet.

Table 5-42 Corning LS Dispersion Compensation Module Data

DCMs	Dispersion @1538nm (ps/nm)	Maximum Insertion Loss (dB, EOL)	Insertion Loss Measured (mean+3s) (dB)
DCMLS40	130	2.5	TBD
DCMLS60	195	3.2	TBD
Notes: When DCM is required, the maximum allowable DCM insertion loss at the DCM port is 10.0 dB.This measured loss does not include the other connector loss (0.1 dB typical, 0.25dB worst case).			

C-Band DCM LBO Rules

For span losses between 20 to 25 dB, the following formula should be applied:

$$LBO_{DCM} = 9\ dB - DCM_{LOSS}$$

For span losses between 25 to 33 dB, the following formula should be applied:

$$LBO_{DCM} = (34 - \text{total span loss}) - DCM_{LOSS}$$

The total span loss includes Line LBOs and CLSC if used. If the value calculated above is less than zero, then $LBO_{DCM} = 0\ dB$.

□

Wavelength (Channel) Growth Plan

Overview

Purpose This section describes the plan for adding channels to the optical spectrum of the Release 6.2 systems for WaveStar® OLS 1.6T configurations. The 1.6T provides automatic gain control and gain tilt control to ensure that transmission performance is maintained as channels are added to the system. For this mechanism to work properly, channels must be added according to the plans described in this section. Note that the L-Band growth plan is independent of the C-Band growth plan, and thus, the OTU sequence for each band is independent as well.

Several plans tailored for the various applications that the WaveStar® OLS 1.6T supports are described in this section. The choice of plan depends on the fiber type, channel spacing, and application.

□

Channel Plans

Definitions for C-Band

Release 6.2 of the WaveStar® OLS 1.6T system uses 80 channels in the C-band that are on the ITU-T 50Ghz grid in the range 191.90 to 195.85 THz (1530.73 to 1562.23 nm). Each add or through OTU outputs two channels spaced 200 GHz apart. The OTU number identifies these pairs of channels. The OTU number is the last two digits of the CP code of an add or through OTU (for example WSPG11 is an OTU30 with OTU number = 11). Figure 5-1, " C-Band Optical Channel Bands and OTU Numbers" (5-45) shows the optical spectrum with each OTU number plotted. The spectrum is divided into five bands that are used in defining the rules for wavelength growth. These five bands are also indicated in Figure 5-1, " C-Band Optical Channel Bands and OTU Numbers" (5-45).

The OMU2 and ODU2C are optional in these C-Band configurations. If the OMU2 and ODU2C are not equipped, the system will support up to 40 channels on 100 GHz spacing. The OMU2 and ODU2C can be added in-service with no impact to the already equipped channels allowing the system to grow to 80 channels on 50 GHz spacing.

Figure 5-1 defines the C-Band Optical Channel Bands.

Figure 5-1 C-Band Optical Channel Bands and OTU Numbers

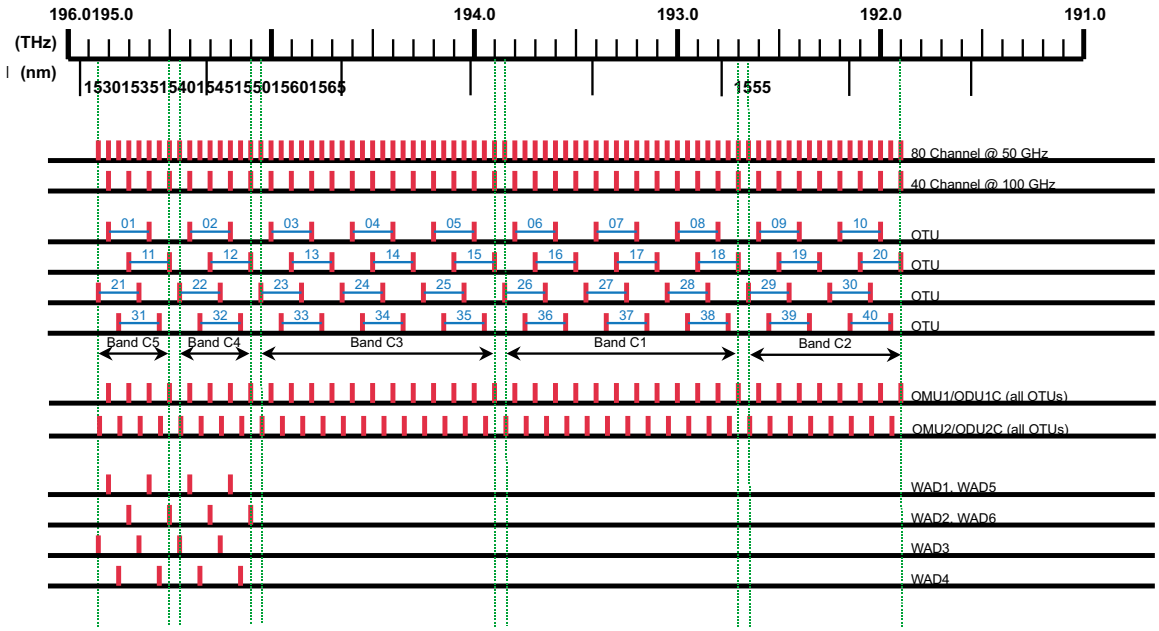

Definitions for L-Band

Release 6.2 of the WaveStar® OLS 1.6T system uses 80 channels in the L-band that are on the ITU-T 50Ghz grid in the range 186.5 to 190.4 THz (1574.127 to 1607.466 nm). Each add or through OTU outputs two channels spaced 200 GHz apart. The OTU number identifies these pairs of channels. The OTU number is the last two digits of the CP code of an add or through OTU (for example WSPG11 is an OTU30 with OTU number = 11). Figure 5-1, " C-Band Optical Channel Bands and OTU Numbers" (5-45) shows the optical spectrum with each OTU number plotted. The spectrum is divided into five bands that are used in defining the rules for wavelength growth. These five bands are also indicated in Figure 5-1, " C-Band Optical Channel Bands and OTU Numbers" (5-45).

The OMU2L and ODU22 are optional in these L-Band configurations. If the OMU2L and ODU22 are not equipped, the system will support up to 40 L-Band channels on 100 GHz spacing. The OMU2L and ODU22 can be added in-service with no impact to the already equipped channels allowing the system to grow to 80 channels on 50 GHz spacing.

Figure 5-2 defines the L-Band Optical Channel Bands.

Figure 5-2 L-Band Optical Channel Bands and OTU Numbers

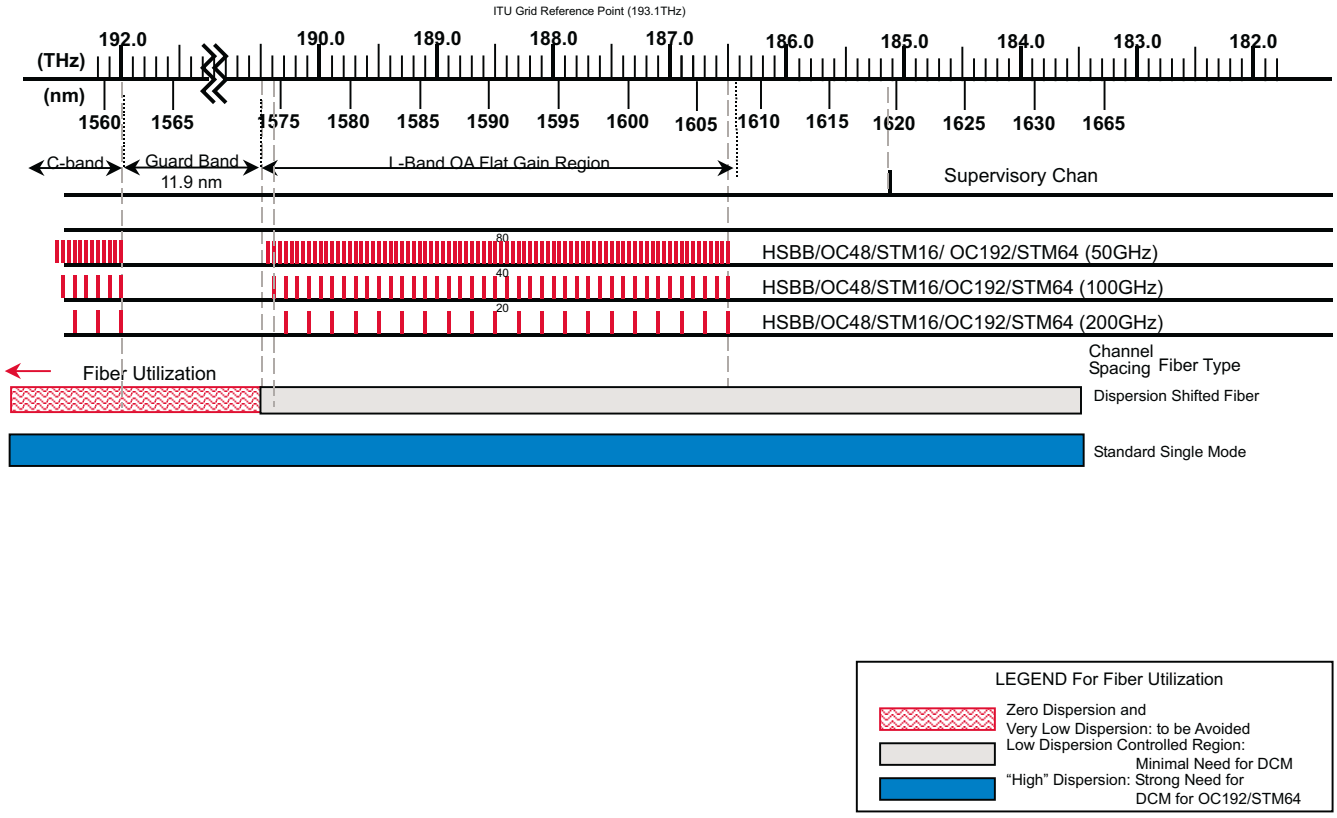

Channel Plans Tables

The set of channels that can be used depends on the fiber type and application. In general, applications with large numbers of spans or long spans result in fewer than 80 channels. Some fiber types are not compatible with the entire set of channels. The set of channels that can be used for each application is designated as a channel plan. These plans are labeled A through H for C-Band, and A through C for L-Band in the tables that follow. The engineering rules show which plan is used for each application. The channel plans with 100 GHz channel spacing must be chosen when the OMU2 and ODU2C are not equipped.

Table 5-43 Channel Plans for L-Band

Channel Plan	Number of Channels	Channel Spacing	Bands Used
A	80	50 GHz	1A-1EL; 2AL-2EL

Table 5-43 Channel Plans for L-Band (continued)

Channel Plan	Number of Channels	Channel Spacing	Bands Used
B	64	50 GHz	1AL-1DL; 2AL-2DL
C	40	50 GHz	1CL-1EL; 2CL-2EL

Refer to Table 5-43, “Channel Plans for L-Band” (5-47) for C-Band channel plans.

Table 5-44 Channel Plans for C-Band

Channel Plan	Number of Channels	Channel Spacing	Bands Used	OMU2/ODU2C Required
A	80	50 GHz	C1-C5	Yes
B	40	100 GHz	C1-C5	No
C	64	50 GHz	C1-C3	Yes
D	32	100 GHz	C1-C3	No
E	40	50 GHz	C1-C2	Yes
F	20	100 GHz	C1-C2	No
G	32	50 GHz	C3-C4*	Yes
H	16	100 GHz	C3-C4	No

Initial Channels Deployed

The automatic gain tilt function requires that only certain channels be used to initialize the system. The first two OTUs are selected to be in the ″flat″ (flatness is defined as small deviation from nominal per channel gain) portion of the OA spectrum. They must also contain wavelengths that differ by at least 1325 GHz. The tables that follow list the allowed initial pairs of OTUs for the various channel plans.

Recommended C-Band Growth Plan

The table that follows (Table 5-38) details the set sequence for growing channels and ordering OTUs. A sequence for each channel plan (A through H) has been defined. The intention is to grow at 100 GHz spacing first, and then add the channels at the 50 GHz ITU Grid. This will accommodate use of only OMU1/ODU1C initially, and after all supported channels on these packs are occupied, the OMU2/ODU2C pair can be added for additional capacity.

Refer to Table 5-43, “Channel Plans for L-Band” (5-47) for L-Band channel plans.

Table 5-45 C-Band OTU Growth Sequence

Channel Plan A & B	Channel Plan C & D	Channel Plan E & F	Channel Plan G & H
OMU1/ODU1C	**OMU1/ODU1C**	**OMU1/ODU1C**	**OMU1/ODU1C**
OTU07 and OTU20	OTU07 and OTU20	OTU07 and OTU20	OTU05 and OTU2
OTU17	OTU17	OTU17	OTU15
OTU08	OTU08	OTU08	OTU03
OTU18	OTU18	OTU18	OTU13
OTU06	OTU06	OTU06	OTU04
OTU09	OTU09	OTU09	OTU14
OTU19	OTU19	OTU19	OTU12
OTU10	OTU10	OTU10	Channel Plan ends here
OTU16	OTU16	OTU16	—
OTU05	OTU05	Channel Plan F ends here	—
OTU15	OTU15	—	—
OTU03	OTU03	—	—
OTU13	OTU13	—	—
OTU04	OTU04	—	—
OTU14	OTU14	—	—
OTU02	Channel Plan D ends here	—	—
OTU12	—	—	—
OTU01	—	—	—
OTU11	—	—	—
Channel Plan B ends here	—	—	—

At this point, the maximum number of channels spaced at 100 GHz would be deployed. Growth beyond this point (channels on the 50 GHz ITU grid) require the OMU2/ODU2C.

Refer to Table 5-43, “Channel Plans for L-Band” (5-47) for L-Band channel plans.

Table 5-46 C-Band OTU Additional Growth Sequence

Channel Plan A Only	Channel Plan C Only	Channel Plan E Only	Channel Plan G Only
OMU2/ODU2C	**OMU2/ODU2C**	**OMU2/ODU2C**	**OMU2/ODU2C**
OTU21	OTU23	OTU26	OTU22
OTU31	OTU33	OTU36	OTU32
OTU22	OTU24	OTU27	OTU23
OTU32	OTU34	OTU37	OTU33
OTU023	OTU25	OTU28	OTU24
OTU033	OTU035	OTU38	OTU134
OTU24	OTU26	OTU29	OTU25
OTU34	OTU36	OTU39	OTU35
OTU25	OTU27	OTU30	—
OTU35	OTU37	OTU40	—
OTU26	OTU28	—	—
OTU36	OTU38	—	—
OTU27	OTU29	—	—
OTU37	OTU39	—	—
OTU28	OTU30	—	—
OTU38	OTU40	—	—
OTU29	—	—	—
OTU39	—	—	—
OTU30	—	—	—
OTU40	—	—	—

C-Band Equivalency Charts

The tables that follow (Tables 5-40, 5-41) list the relationship between regular OTU codes and the 4:1 10G Multiplex OTU (OTU70) codes. The OTU70s will grow wavelengths in the same order as the regular OTUs. Refer to Table 5-43, “Channel Plans for L-Band” (5-47) for the relationship between regular OTU codes and the 4:1 10G Multiplex OTU (OTU70).

Table 5-47 Equivalency Chart/OMU1and ODU1C Compatibility

Channel Frequency	Regular OTU Code	4:1 10G Multiplex Code	Compatible WAD
9580	Code 01	Code 02	WAD1/5
9560	Code 01	Code 06	WAD1/5
9540	Code 02	Code 10	WAD1/5
9520	Code 02	Code 14	WAD1/5
9500	Code 03	Code 18	—
9480	Code 03	Code 22	—
9460	Code 04	Code 26	—
9440	Code 04	Code 30	—
9420	Code 05	Code 34	—
9400	Code 05	Code 38	—
9380	Code 06	Code 42	—
9360	Code 06	Code 46	—
9340	Code 07	Code 50	—
9320	Code 07	Code 54	—
9300	Code 08	Code 58	—
9280	Code 08	Code 62	—
9260	Code 09	Code 66	—
9240	Code 09	Code 70	—
9220	Code 10	Code 74	—
9200	Code 10	Code 78	—
9570	Code 11	Code 04	WAD2/6
9550	Code 11	Code 08	WAD2/6
9530	Code 12	Code 12	WAD2/6
9510	Code 12	Code 16	WAD2/6
9490	Code 13	Code 20	—
9470	Code 13	Code 24	—
9450	Code 14	Code 28	—
9430	Code 14	Code 32	—
9410	Code 15	Code 36	—
9390	Code 15	Code 40	—

Table 5-47 Equivalency Chart/OMU1and ODU1C Compatibility (continued)

Channel Frequency	Regular OTU Code	4:1 10G Multiplex Code	Compatible WAD
9370	Code 16	Code 44	—
9350	Code 16	Code 48	—
9330	Code 17	Code 52	—
9310	Code 17	Code 56	—
9290	Code 18	Code 60	—
9270	Code 18	Code 64	—
9250	Code 19	Code 68	—
9230	Code 19	Code 72	—
9210	Code 20	Code 76	—
9190	Code 20	Code 80	—

Refer to Table 5-43, “Channel Plans for L-Band” (5-47) for the relationship between regular OTU codes and the 4:1 10G Multiplex OTU (OTU70).

Table 5-48 Equivalency Chart/OMU2 and ODU2C Compatibility

Channel Frequency	Regular OTU Code	4:1 10G Multiplex Code	Compatible WAD
9585	Code 21	Code 01	WAD3
9565	Code 21	Code 05	WAD3
9545	Code 22	Code 09	WAD3
9525	Code 22	Code 13	WAD3
9505	Code 23	Code 17	—
9485	Code 23	Code 21	—
9465	Code 24	Code 25	—
9445	Code 24	Code 29	—
9425	Code 25	Code 33	—
9405	Code 25	Code 37	—
9385	Code 26	Code 41	—
9365	Code 26	Code 45	—
9345	Code 27	Code 49	—

Table 5-48 Equivalency Chart/OMU2 and ODU2C Compatibility (continued)

Channel Frequency	Regular OTU Code	4:1 10G Multiplex Code	Compatible WAD
9325	Code 27	Code 53	—
9305	Code 28	Code 57	—
9285	Code 28	Code 61	—
9265	Code 29	Code 65	—
9245	Code 29	Code 69	—
9225	Code 30	Code 73	—
9205	Code 30	Code 77	—
9575	Code 31	Code 03	WAD4
9555	Code 31	Code 07	WAD4
9535	Code 32	Code 11	WAD4
9515	Code 32	Code 15	WAD4
9495	Code 33	Code 19	—
9475	Code 33	Code 23	—
9455	Code 34	Code 27	—
9435	Code 34	Code 31	—
9415	Code 35	Code 35	—
9395	Code 35	Code 39	—
9375	Code 36	Code 43	—
9355	Code 36	Code 47	—
9335	Code 37	Code 51	—
9315	Code 37	Code 55	—
9295	Code 38	Code 59	—
9275	Code 38	Code 63	—
9255	Code 39	Code 67	—
9235	Code 39	Code 71	—
9215	Code 40	Code 75	—
9195	Code 40	Code 79	—

Rules for Adding Channels at WAD Sites (C-Band)

1. Deploy initial four channels.
2. Add WAD channels starting with longest wavelength and growing to shortest wavelength.

Recommended L-Band Growth Plan

The table that follows details the set sequence for growing channels and ordering OTUs in the L-Band. A sequence for each channel plan (A through C) has been defined. The intention is to grow at 100 GHz spacing first, and then add the channels at the 50 GHz ITU Grid. This will accommodate use of only OMU1L/ODU21 initially, and after all supported channels on these packs are occupied, the OMU2L/ODU22 pair can be added for additional capacity.

Refer to Table 5-43, “Channel Plans for L-Band” (5-47) for L-Band channel plans.

Table 5-49 L-Band OTU Growth Sequence

Channel Plan A	Channel Plan B	Channel Plan C
ODU21/OMU1L	**ODU21/OMU1L**	**ODU21/OMU1L**
OTU01 and OTU06	OTU01 and OTU06	OTU06 and OTU09
OTU02	OTU02	OTU07
OTU03	OTU03	OTU08
OTU04	OTU04	OTU16
OTU05	OTU05	OTU17
OTU11	OTU11	OTU18
OTU12	OTU12	OTU19
OTU13	OTU13	OTU10
OTU14	OTU14	OTU20
OTU15	OTU15	—
OTU07	OTU07	—
OTU08	OTU08	—
OTU16	OTU16	—
OTU17	OTU17	—
OTU18	OTU18	—
OTU09	—	—
OTU10	—	—
OTU19	—	—

Table 5-49 L-Band OTU Growth Sequence (continued)

Channel Plan A	Channel Plan B	Channel Plan C
ODU21/OMU1L	**ODU21/OMU1L**	**ODU21/OMU1L**
OTU20	—	—

At this point, the maximum number of channels spaced at100 GHz would be deployed. Growth beyond this point (channels on the 50 GHz ITU grid) require the OMU2L/ODU2L pair.

Refer to Table 5-43, “Channel Plans for L-Band” (5-47) for additional growth on L-Band channel plans.

Table 5-50 L-Band OTU Additional Growth Sequence

Channel Plan A	Channel Plan B	Channel Plan C
ODU22/OMU2L	**ODU22/OMU2L**	**ODU22/OMU2L**
OTU21	OTU21	OTU26
OTU22	OTU22	OTU36
OTU23	OTU23	OTU27
OTU24	OTU24	OTU37
OTU31	OTU31	OTU28
OTU33	OTU33	OTU29
OTU34	OTU34	OTU39
OTU25	OTU25	OTU30
OTU26	OTU26	OTU40
OTU27	OTU27	—
OTU28	OTU28	—
OTU35	OTU35	—
OTU36	OTU36	—
OTU37	OTU37	—
OTU38	OTU38	—
OTU29	—	—
OTU30	—	—
OTU39	—	—
OTU40	—	—

Concatenating Systems

Overview

Purpose This section explains the rules for concatenating OTUs in a system.

□

Maximum Number of OTUs Between Client Equipment

Overview

The maximum number of OTUs through which any single optical channel may pass within a single WaveStar® OLS 1.6T system depends upon the OTU type. Refer to Table 5-51, "Maximum Number of OTUs Between Client Equipment" (5-57) for the maximum number of OTUs which may be placed between client equipment based on the OTU type.

Starting with the point at which an optical channel enters the WaveStar® OLS 1.6T system, count the number of OTUs through which that optical channel travels until it is dropped to client equipment.

That number cannot exceed the number listed for that OTU type in Table 5-51, "Maximum Number of OTUs Between Client Equipment" (5-57).

Table 5-51 Maximum Number of OTUs Between Client Equipment

Data Transmission Rate	Maximum Number of Concatenated OTUs
OC-192/STM-64	75
OC-48/STM-16	75
High Speed Broadband 3R Mode (hsbbcdr=yes) > 1.25GB/s	4
High Speed Broadband 3R Mode (hsbbcdr=yes) > 1.25GB/s	10
High Speed Broadband (100 MB to 2.5 GB) 2R Mode (hsbbcdr=no)	4

Data Communications Networks

Overview

Purpose

This section provides introductory information on the following:

- OSI IS-IS Level 2 Routing Feature
- 1.6T Routing Capability

Also included in this section is information on the following:

- DCN Parameter Specification
- General Information
- Remote Access from a TL1 Based OS
- Network Partitioning Engineering Rules and Guidelines
- Installation with IS-IS Areas for Level 2 Routing
- SDL Provisioning
- SNMS Connections

Maximum Number of Network Elements in a String

The maximum number of WaveStar® OLS 1.6T Network Elements which may be placed in a string is 32. All of the Network Elements in a string communicate with each other using Supervisory Data Links.

In this application, a ***string*** is defined as that section of a WaveStar® OLS 1.6T between two End Terminals, including the two (2) End Terminals or the total number of 1.6T Network Elements in a closed

ring. Refer to Figure 5-3, “String Examples” (5-59) for string examples.

Figure 5-3 String Examples

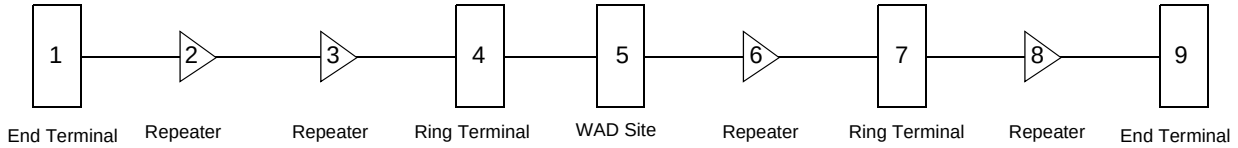

A. One OLS String Comprised of Nine (9) Network Elements

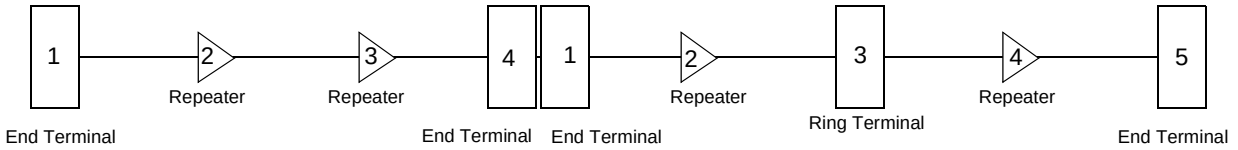

B. Two OLS Strings Comprised of Four (4) Network Elements and Five (5) Network Elements

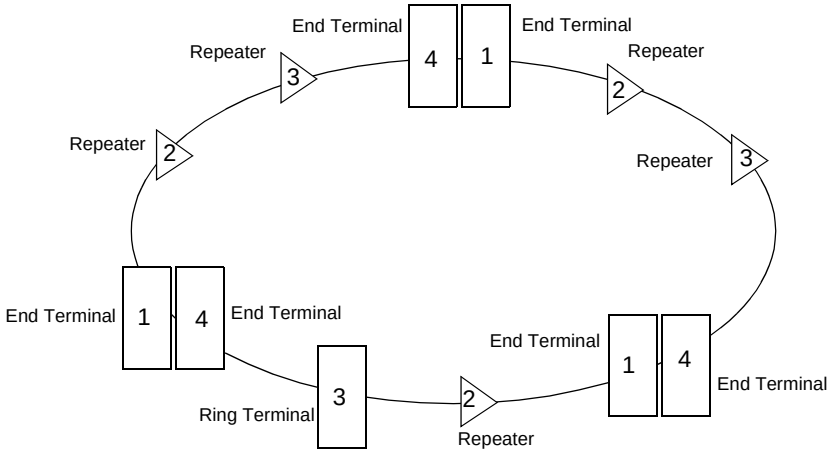

C. Three OLS Strings, Each Comprised of Four (4) Network Elements, in a Ring Topology

OSI IS-IS Level 2 Routing Feature

The Open System Interconnect (OSI) Intermediate System to Intermediate System (IS-IS) Level 2 routing feature of the WaveStar® OLS 1.6T Network Element (NE) (Release 2.0 and later) makes it possible to increase the size of the management domains by partitioning a large network into multiple areas. Network partitioning allows the expansion of a managed network through the use of Level 2 IS routing protocols at the network layer of the OSI stack.

For the WaveStar® OLS 1.6T NEs, routing is supported within a single routing domain, which may consist of a single area or multiple areas. The capability of partitioning a large network into multiple areas is needed to keep the size of the routing information base and resources needed to compute routes reasonably. Each routing area maintains detailed routing information that allows it to reach other routing areas. Since each routing area needs to maintain detailed routing information about its own internal composition, the amount of data stored in the routing information base is minimized. This, in turn, reduces the amount of data that needs to be exchanged to update this information and the computational overhead associated with computing routes within a routing domain.

Level 1 IS provides connectivity between NEs in the same area, while Level 2 IS provides interconnectivity between different areas. Routing within an area is referred to as Level 1 Routing. Routing between different areas is referred to as Level 2 Routing. Level 2 IS keep track of the available routes to destination areas, while Level 1 IS keep track of the routing within their own areas.

The use of OS-OS Level 2 hierarchical routing requires upfront network planning and design of the network areas. This also requires some additional provisioning and, in some cases, interworking between these areas. Essential information for using this feature is included in the following pages.

1.6T Routing Capability

The WaveStar® OLS 1.6T routing capability is developed based on the ISO 9542: ES-IS and ISO 10589: IS-IS protocols which are used by other Lucent NEs for selective routing of network layer data Protocol Data Unit (PDU). The routing protocols automatically determine the ″best″ route to all destinations in the network.

In WaveStar® OLS 1.6T systems, the LAN subnetwork is a broadcast network, while the supervisory datalink is a Point-to-Point subnetwork. The 1.6T supports two (2) datalinks per optical line that can be provisioned as both ″express″ and ″local″ independently for large network operation. The use of the ″express″ datalink can significantly decrease the maintenance network diameter by reducing number hop counts that are essential in supporting a large network.

□

DCN Parameter Specifications

Network Parameter Specifications

Refer to Table 5-52, "Network Parameter Specifications" (5-61) for specifications for Data Communications Network (DCN) parameters.

Table 5-52 Network Parameter Specifications

Parameter	IS-IS Divided Network Maximum
	R5.0
Maximum number of nodes in a maintenance subnetwork[1] (that is, nodes that are connected via the same optical SDL)	32
Maximum Number of Hops in a LAPD chain (without the use of Express SDL Links)	31
Maximum Number of total hops between nodes to allow end to end communication (both LAN[2,3]and LAPD)	32
Maximum Number of LANs per Area	10
Maximum Number of LAN-hops between nodes to allow end to end communication	15
Maximum Number of Areas in the Network	15
Maximum Number of L2 LANs in the Level 2 subdomain	15
Maximum Number of Nodes per LAN	25
Maximum Number of area per LAN	5
Maximum Number of Nodes per LAN that are part of the L2 subdomain	10
Maximum Number of SNMS connections that can be forwarded by a node	100
Maximum Number of SNMS connections that can be forwarded by a TSB node	64
Maximum Number of Nodes per OSI L1 area	32
Maximum Number of Nodes in the OSI L2 subdomain	32
Maximum number of simultaneous SNMS software downloads	4
Maximum number of simultaneous remote copies from a given source NE	5

Table 5-52 Network Parameter Specifications (continued)

Parameter	IS-IS Divided Network Maximum
	R5.0
Maximum number of total simultaneous remote copies within an open or closed ring	8

Notes:

1. The maintenance subnetwork is defined as a group of network elements that are connected either in an open ring with an End Terminal at each end or close ring via an optical supervisory data link. A network topology map of the maintenance subnetwork can be generated via any one of the network elements in the local transmission ring.
2. A LAN is considered a part of an area if at least two of the nodes on that LAN are in that area.
3. A LAN is considered to be part of the L2 subdomain if there are nodes of at least two different areas connected to that LAN.
4. Associations—Each WaveStar® OLS 1.6T has at least one association from the SNMS manager. The associations are live end to end connections between the SNMS(s) and the NEs that it is managing. The number of physical points of attachment required in a network depends on the total number of nodes, the topology of the network, and the maximum number of associations supported by the GNE node (for example, 500 nodes require a minimum of 5 POAs).

□

General Information

Rules versus Guidelines

In the context of this document:

- A ***rule*** is a pre-condition for proper network layer routing. All rules are ***mandatory***.
- A ***guideline*** is a recommended condition that will add robustness to the data communications network in the event of IAO LAN, SDL, and/or equipment failures.

If engineering rules have not been met, there is no guarantee that the network will successfully route messages at the network layer of the OSI stack. There may be customer network applications that cannot adhere to all guidelines. In these special cases, the user should be aware of the vulnerabilities that exist as a result of not following the guideline(s).

Key to Symbols

Refer to Figure 5-4, “Symbol Key” (5-63) for the key to symbols used in diagrams found on the following pages.

Figure 5-4 Symbol Key

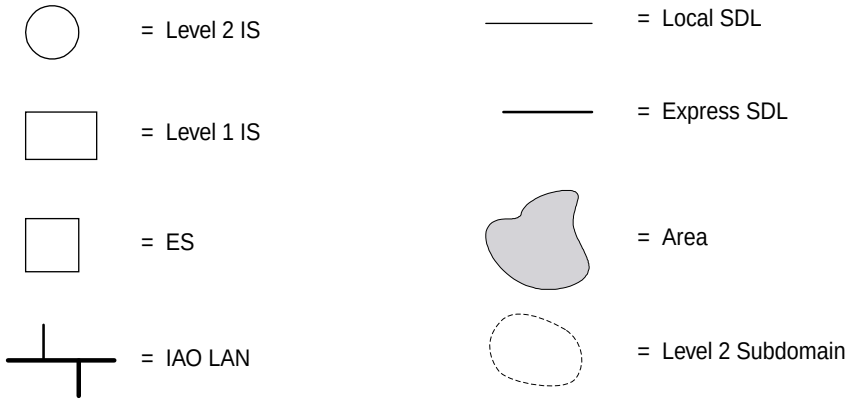

Provisionable Parameters for Network Partitioning

The user must properly plan and engineer the provisioning of Level 2 IS and Area Addresses of the NSAPs with the knowledge of the network capability limits for network partitioning in a large network. The following provides a summary of the 1.6T″s provisionable parameters and its associated network limit capability:

NSAP Provisioning

The WaveStar® OLS 1.6T uses a variable length Area Address. The Area Address is the user-provisionable portion of the NSAP for

routing purposes. Changing the value of the NSAP is a provisioning change, but can affect communications within a subnetwork. The ENT-OSI command is used for provisioning the Area Address portion of the NSAP (that is, LOCALADDRESS parameter in TL1). Execution of this command will reset the overhead controller of a Terminal, or reboot the system controller in the case of a Repeater.

Express and Local SDL Provisioning

Each Local SDL must be terminated at each Level 1 IS Node, and the Express SDL may be used to connect the Level 2 Nodes to establish adjacency with each other by skipping the nodes between them to form a single Level 2 domain. Refer to Figure 5-5, “Express Datalink — Single Level 2 Routing Domain” (5-65). The use of the Express SDL can significantly reduce the number of hops between the nodes by skipping the Level 1 Nodes in between. The ENT-SUPR command is used to provision the Local and Express SDLs in a specified network element.

Please note Figure 5-5, “Express Datalink — Single Level 2 Routing Domain” (5-65), illustrates two (2) SNMS systems connected to an OLS network that has been configured into three (3) separate OSI areas. All Level 1 Nodes are connected via the Local SDL, and all

Level 2 Nodes are joined together via the Express SDL to form a single Level 2 domain.

Figure 5-5 Express Datalink — Single Level 2 Routing Domain

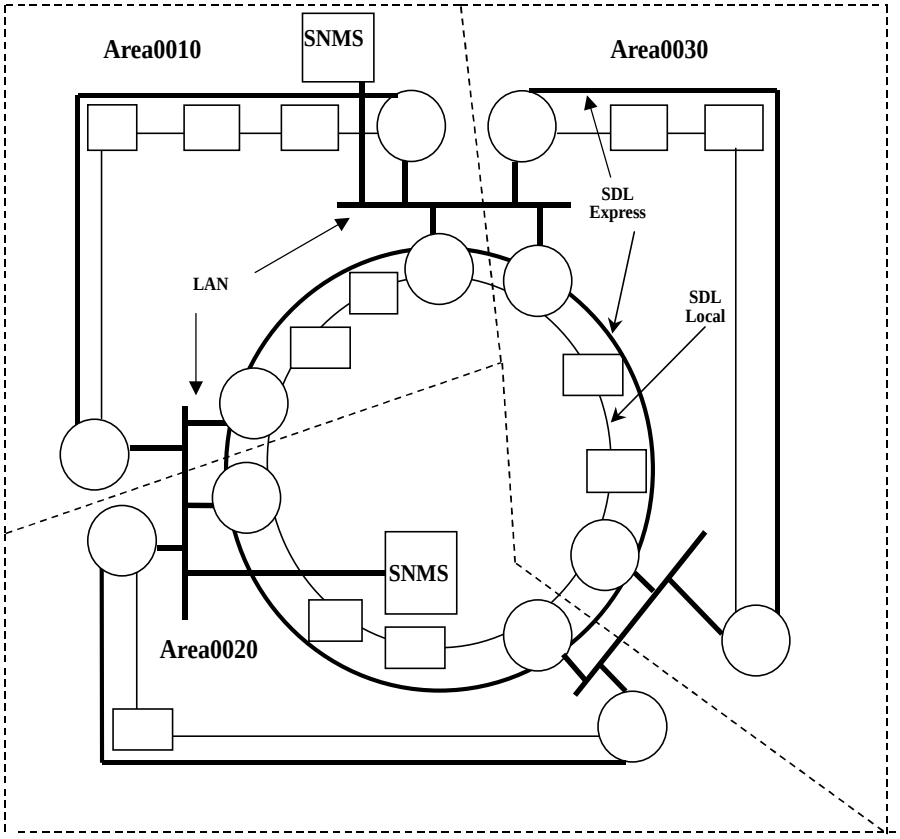

Remote Access from a TL1-Based OS

Rules and Guidelines

Rule R1

At least one GNE is needed for each maintenance subnetwork for a TL1 based OS.

Login access to a remote NE from the TL1-based OS and/or CIT via a GNE is not possible over a LAN connection (for example, LAN connections via a hub or a cross-over cable connected between the NEs) as illustrated in Figure 5-6, “NE4 and NE5 Not Reachable— TL1-Based OS Over LAN Connection” (5-66) below. This rule does not apply to the TL1 over OSI interface that is used between the OS and the GNE.

Figure 5-6 NE4 and NE5 Not Reachable— TL1-Based OS Over LAN Connection

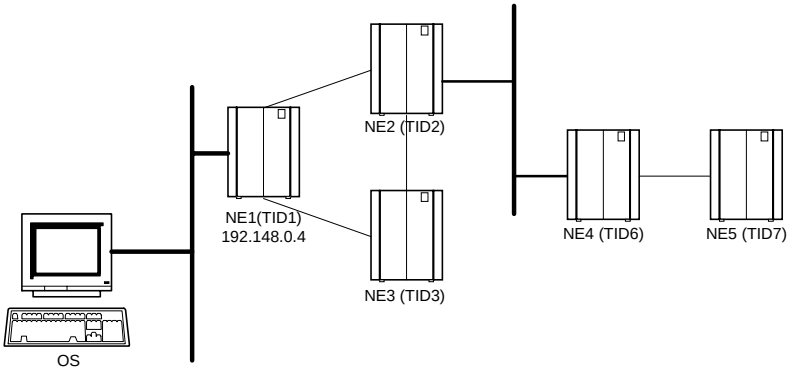

Guideline G2

As a general guideline for TL1 over TCP/IP interface, two GNEs per subnetwork should be used for redundancy.

□

Network Partitioning Engineering Rules and Guidelines

Rules and Guidelines

Rule R10

WaveStar® OLS 1.6T Nodes can route messages to other Areas in a routing domain if the following NSAP address rules are obeyed:

For all Nodes in the routing domain:

1. The length of the System ID field in the NSAP is 6 bytes.
2. The length of the Area Address field in the NSAP must be the same in a given routing domain.
3. All Nodes must choose the same constants (for example, AFI, IDI, and DFI in the fixed length ISO DCC NSAP format).
4. NSAP addresses must be unique across the network.

WaveStar® OLS 1.6T supports a variable length of up to 13 bytes format for the Area Address field. WaveStar® OLS 1.6T CIT supports the provisioning of both the variable length Area Address via the cut through mechanism and fixed length Area Address via its GUI. Therefore, the WaveStar® OLS 1.6T can support network layer interworking with other Network Elements in the network that support either a fixed or variable length Area Address field (between 1 and 13 bytes). The SNMS does not support the variable length Area Address, but the values for the AFI, IDI, and DFI, etc., of the fixed length area address are provisionable. Each byte of the NSAP is represented by two Hex characters ranging from 00 to FF. Refer to Figure 5-7, “WaveStar® OLS 1.6T Flexible NSAP Format” (5-67).

Figure 5-7 WaveStar® OLS 1.6T Flexible NSAP Format

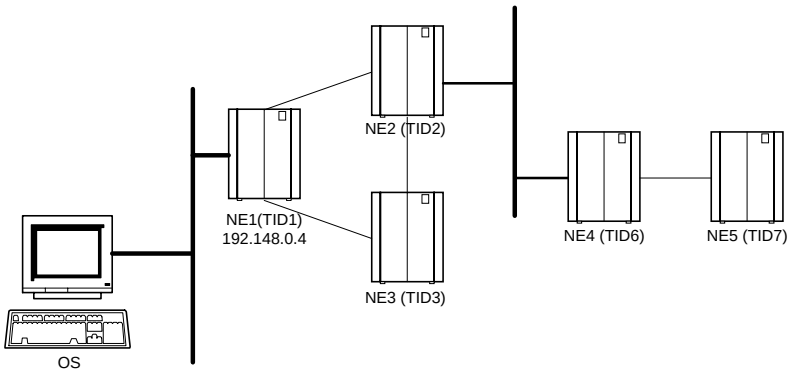

Rule R15

For the fixed length ISO DCC SONET NSAP address format, the area address is provisioned based on the following:

- The first eight (8) characters of all WaveStar® OLS 1.6T NSAPs are the same and should never be changed once they are specified. The remaining 18 characters of the Area Address are provisionable, but only the AreaID field should be changed to assign an NE to a different area. The remainder of the NSAP includes the System Identifier field, which is unique to each NE, and the Selector Field. Refer to Table 5-53, "Fixed Length ISO DCC NSAP Format" (5-68) for the components of the NSAP.

Table 5-53 Fixed Length ISO DCC NSAP Format

NSAP Field	AFI	IDI	IDI PAD	DFI	ORG	RES	RD	AreaID	System ID	SEL
Bytes	**1**	**2**		**1**	**3**	**2**	**2**	**2**	**6**	**1**
Default Value: (Hex)	39	840	F	80	000000	0000	0000	0000	Ethernet Address	1D
	Not User Provisionable[1]			User Provisionable					Not Provisionable	

Notes:

1. Values in these fields can be changed but are not user provisionable. However, all Network Elements must have the same constants once they are defined.

AFI: Authority and Format Identifier

IDI: Initial Domain Identifier

DFI: DSP Format Identifier

ORG: Organization Identifier

RES: Reserved

RD: Routing Domain

AreaID: Identifier for a Routing Area within a Routing Domain

System ID: Hard-coded 6 octet Ethernet Address

SEL: NSAP Selector

A subnetwork is partitioned by changing the NSAP AreaID field to a specific value that is the same for all NEs that will be within a single planned area.

Rule R20

All nodes in a network must use the same address format.

Rule R25

An Area must have a unique Area Address.

The entire NSAP Area Address must be identical for all NEs in an area and different from the NSAP Area Address for all other Areas. If more than one Area with the same Area Address exists, routing to these Areas from other Areas is not predictable and cannot be expected to function properly.

Rule R30

An Area must have a unique Area Address within the WaveStar® OLS 1.6T network. The default Area Address (AreaID = 0000) must not be used in an OSI-domain that is divided into Areas.

Guideline G35

The management network should only be divided into Areas during the initial network deployment when the network is expected to grow too large for a single area.

Rule R40

In an IS-IS Level 2 network, all WaveStar® OLS 1.6T nodes in the network must run WaveStar® OLS 1.6T software R2.0 or later and shall not be downgraded to a previous software release.

Guideline G45

One and only one non-repeater NE node must be provisioned as Directory Service Registration Manager within each Level 1 Routing Area. If this condition is not met, no NE can register itself with the Directory Service Agent.

Rule R50

The number of Areas, Nodes per Area, nodes in the Level 2 Subdomain, and so forth, is limited.

Guideline G55

For networks up to 50 Nodes, it is preferable to use an undivided OSI-network with DYNAMIC routing from SNMS. Full re-routing capabilities over all physical routes is then automatically available and DCN provisioning is not needed (default settings can be used), which implies easier network design and installation for maximum network robustness.

Rule R60

There must be at least one Level 2 Node in each Area and only one single Level 2 Subdomain shall be established that provides connectivity to all Areas. If more than one Level 2 Subdomain is used, it will segment the network and routing cannot be expected to function properly. Refer to Figure 5-8, “Single versus Dual Level 2 Routing Domains for Network Partitioning” (5-70).

Figure 5-8 Single versus Dual Level 2 Routing Domains for Network Partitioning

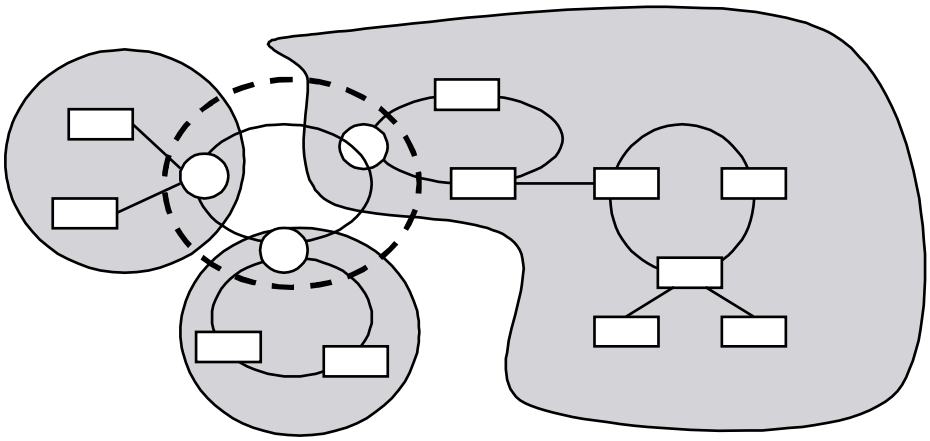

Correct partitioning using a single level 2 routing domain

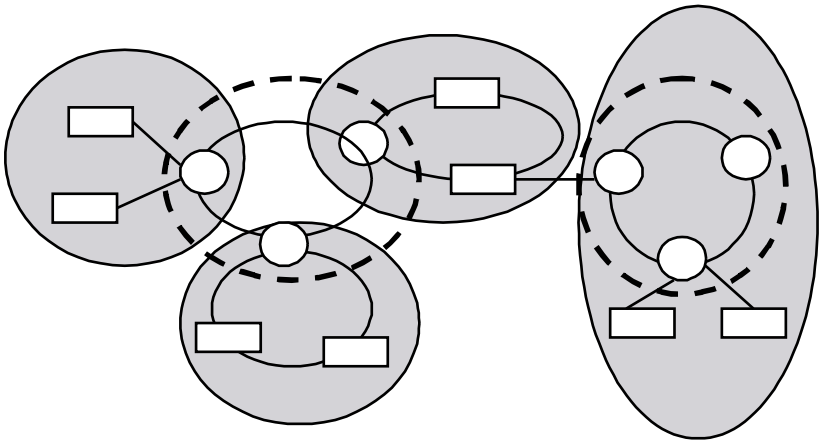

Incorrect partitioning using two separate level 2 routing domains

Guideline G70

A single point of failure for interconnection of the Areas is avoided by:

- Using a ring-topology for the Level 2 Subdomain where feasible.
- Using a ring-topology within each Area where feasible.
- Using a double entrance into each area from the SNMS and from other Areas, such that the entries into the Area cannot be disconnected by a single node failure within an area. Refer to Figure 5-9, “Dual Homed Network Configuration, SNMS Over An IAO LAN” (5-71).

Use two adjacent Level 2 Nodes per each Area whenever possible to avoid a single level node failure within the Area.

Figure 5-9 Dual Homed Network Configuration, SNMS Over An IAO LAN

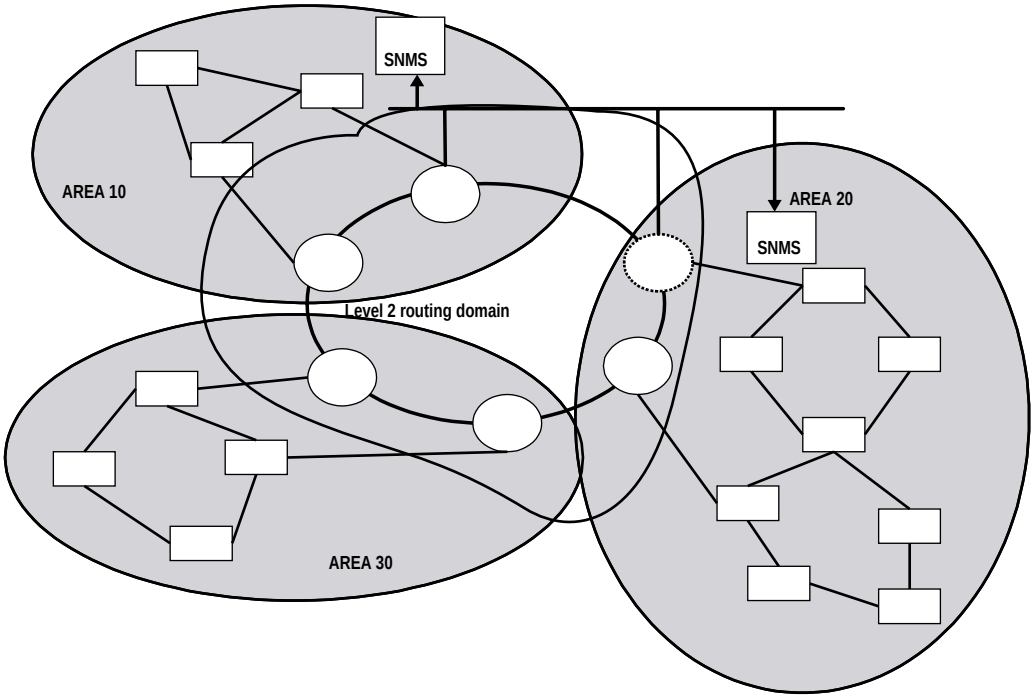

Guideline G80

The possible number of Level 2 Nodes in a ring is:

- Any number of Nodes from zero to all.
- Two (for example, when dual-homing is used). The two Level 2 ISs must be adjacent. In this case, there shall be multiple Level 1 paths between the Level 2 ISs within the Area.

Refer to Figure 5-10, "Possible Number of Level 2 Node Configurations in a Ring" (5-72).

Figure 5-10 Possible Number of Level 2 Node Configurations in a Ring

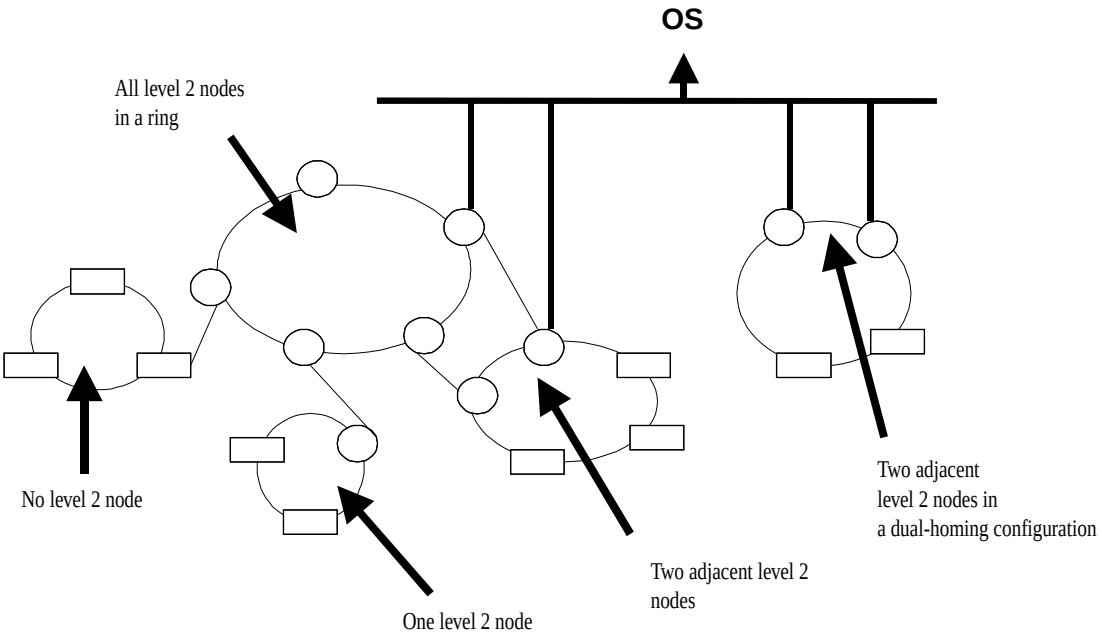

Guideline G85

For a ring of Level 2 Nodes, three valid area topologies exist:

- All nodes in the ring are part of the same area. Refer to Figure 5-11, “All Level 2 Nodes in a Ring are in the Same Area” (5-73).

Figure 5-11 All Level 2 Nodes in a Ring are in the Same Area

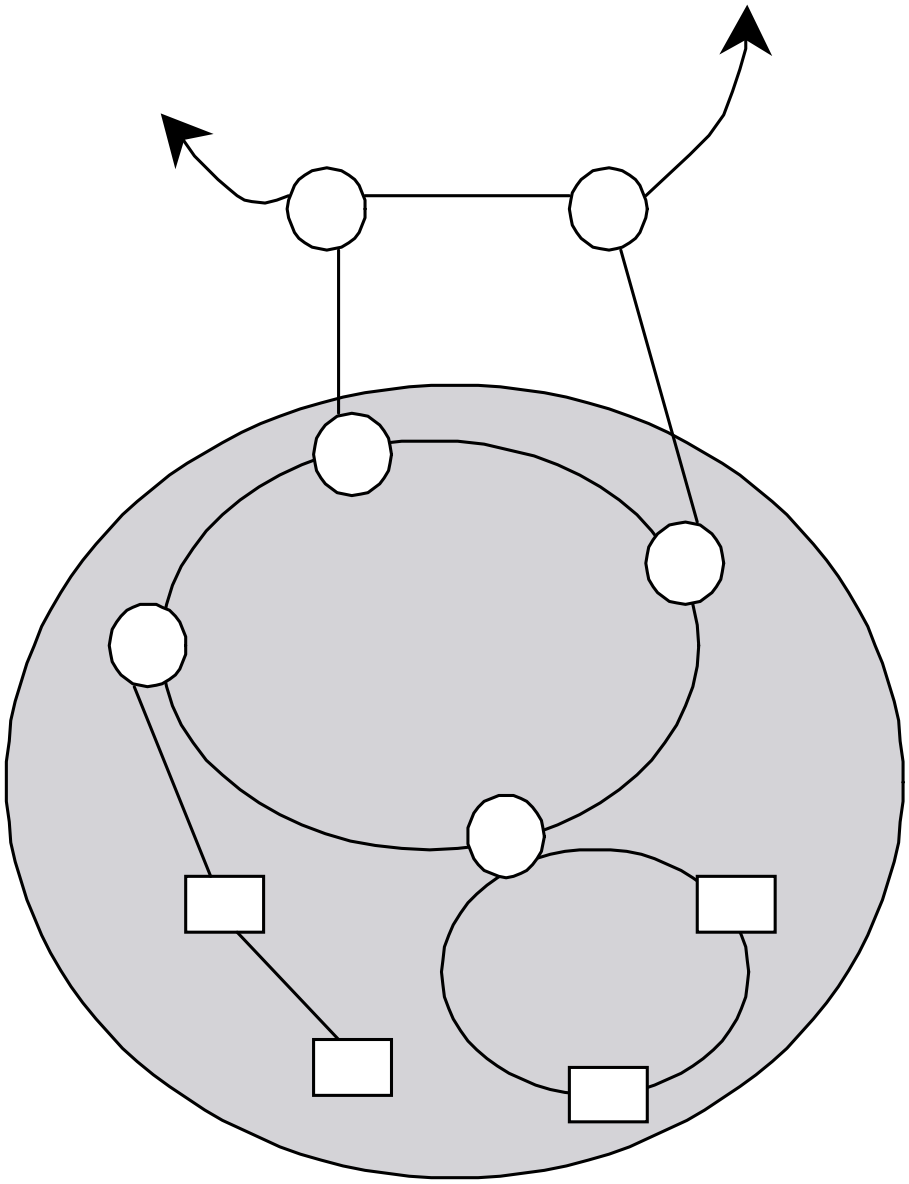

- Each node in this ring is part of a different area. Refer to Figure 5-12, “A Single Node is in a Different Area” (5-74).

Figure 5-12 A Single Node is in a Different Area

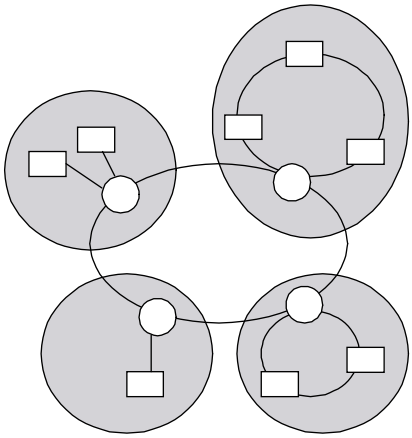

- A multiple number of adjacent Level 2 Nodes is in the same area (for example, two adjacent nodes in a dual-homing configuration). Refer to Figure 5-13, “A Pair of Adjacent Level 2 Nodes are in the Same Area (that is, Dual Homing Configuration)” (5-74).

Figure 5-13 A Pair of Adjacent Level 2 Nodes are in the Same Area (that is, Dual Homing Configuration)

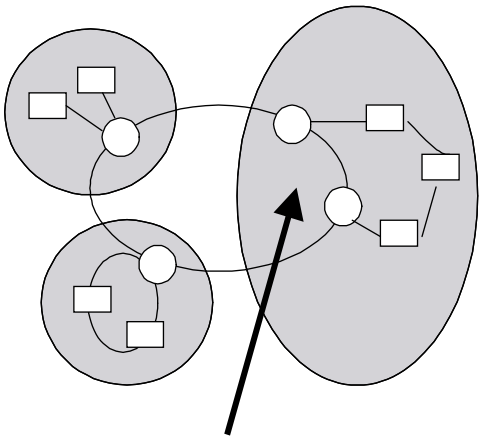

Guideline G90

A single link failure within a Level 1 Area must not divide the Area into two (2) separate islands. Refer to Figure 5-14, “Recommended

Area Partition to Survive a Single Link Failure Within a Level 1 Area." (5-75).

Failure to meet this guideline will result in some messages not being routed properly in the event of the single link failure that divides an area into two islands. The WaveStar® OLS 1.6T currently does not support the partition repair capability.

Figure 5-14 Recommended Area Partition to Survive a Single Link Failure Within a Level 1 Area.

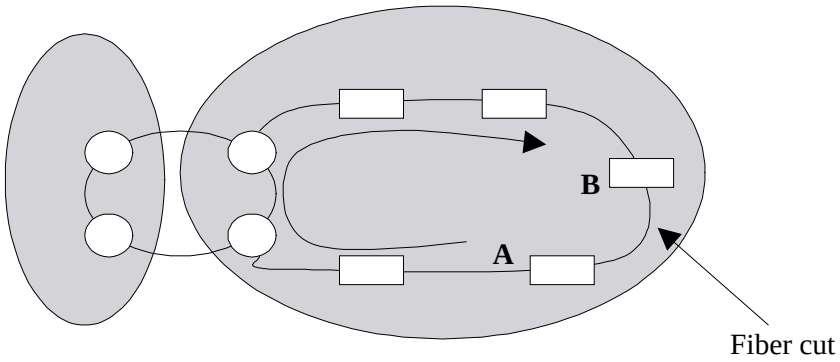

RECOMMENDED
Communication between A and B can be established via an alternate level 1 route to survive the failure.

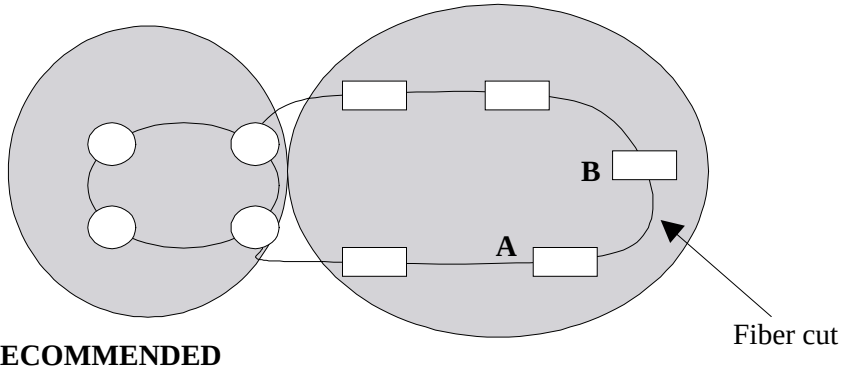

NOT RECOMMENDED
Communication between A and B can not be established unless partition repair function is supported.

Guideline G95

If the IAO LAN is the only method of connecting between Areas, then at least two (2) Level 2 ISs for each Area are connected with the SNMS for redundancy. A second IAO LAN hub connected with another SNMS would provide additional redundancy. Refer to Figure 5-15, "Network Partitioning for LAN Connection with Two NEs Per

Area." (5-76) for two (2) recommended methods of providing redundancy between Areas connected solely by IAO LANs

Figure 5-15 Network Partitioning for LAN Connection with Two NEs Per Area.

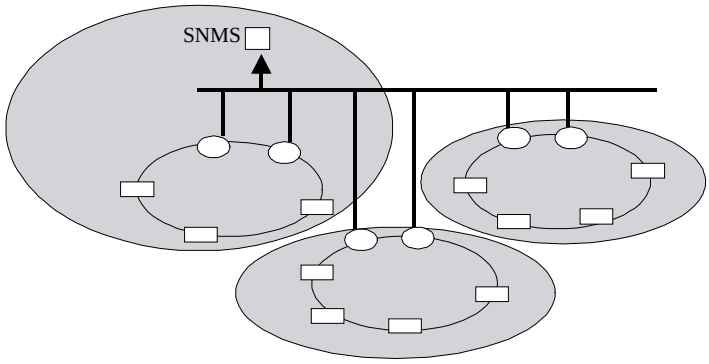

Recommended

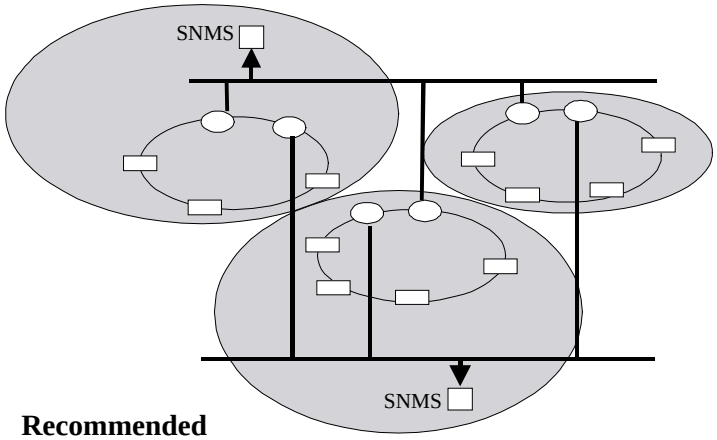

Recommended

Rule R100

All Nodes in an Area must have data communication connectivity within an Area to other Nodes in the same area. If this rule is not followed, the Area would be segmented, and data communication routing could not be expected to function properly. Refer to Figure

5-16, “Data Communication Connectivity Between NEs in an Area” (5-77).

Figure 5-16 Data Communication Connectivity Between NEs in an Area

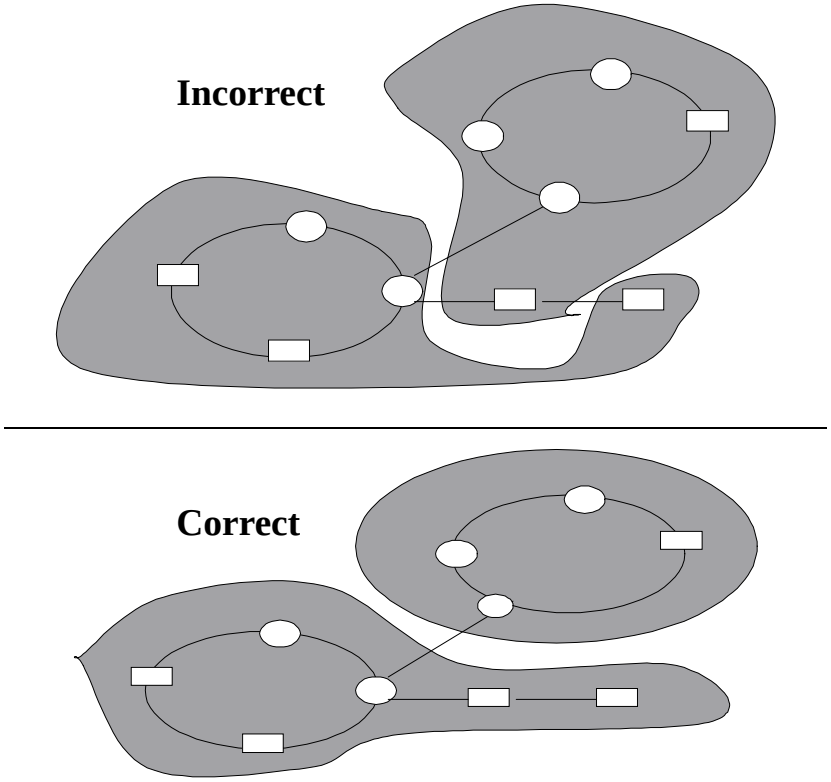

Rule R105

If the IAO LAN must be used to connect between Areas, then at least one (1) NE in each Area on the LAN must be provisioned to be a Level 2 IS. Refer to Figure 5-17, “Network Partitioning for a LAN Connection between Two Areas” (5-78).

For proper network layer routing, every Level 2 IS should have at least one (1) neighbor (via SDL or IAO LAN) that is also a Level 2

IS. If this rule is not followed, routing between the two (2) Areas will not be possible.

Figure 5-17 Network Partitioning for a LAN Connection between Two Areas

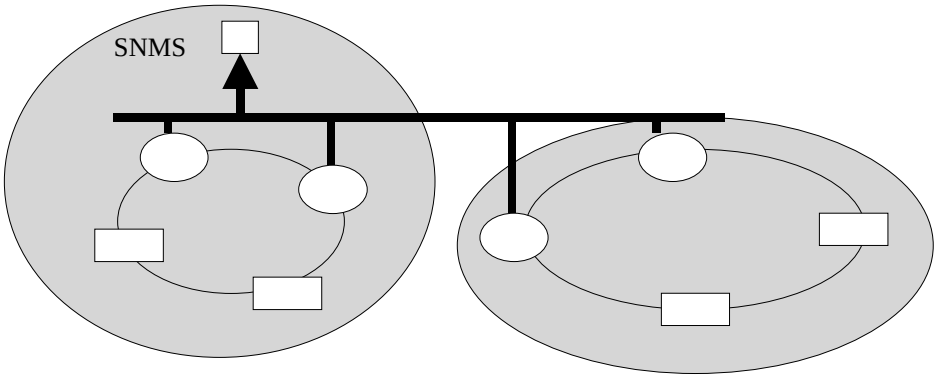

Correct partitioning example with a level 2 node connecting the LAN.

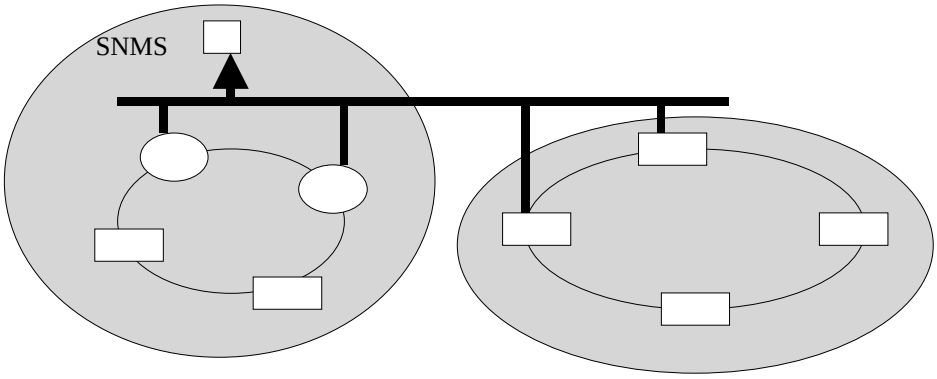

Incorrect partitioning example
No level 2 node(s) is connected with the LAN.

Installation with IS-IS Areas for Level 2 Routing

Discussion

When the installation of a new network is started, an area plan must be available. This plan must identify:

- Each WaveStar® OLS 1.6T
- Each SNMS
- Each area address
- The location and Level 2 characteristics of each Network Element (NE)
- The designated NE registration manager for each Level 1 Area
- The primary and secondary TSB NEs for each Level 1 area if TCP/IP connectivity with SNMS is required

Observance of the rules and guidelines provided in this document is imperative. During installation of the NE at the site, the Area Address, Level 2 characteristics, and LAN parameters must be provisioned via the WaveStar® OLS 1.6T CIT. SNMS must establish a connection with the WaveStar® OLS 1.6T NEs via the NSAP that includes the ″newly″ provisioned area address. The SNMS area address must be provisioned and activated before connections with the WaveStar® OLS 1.6T NEs are established. The operator shall not leave the site until proper connection between the NEs and the manager is confirmed.

Rules and Guidelines

Rule R110

Prior to installation/changing/upgrading/enlarging of the network is started, a DCN-plan must be available. This plan must include at least:

- A topology picture of the planned OSI-DCN, consisting of all nodes (including all OLSs and all SNMSs) and how they are interconnected via LAN, SDL, transparent bridge interconnections between LANs including the connection with the external router.
- An indication of how the OSI-DCN is divided into the OSI-networks, clusters and/or areas. Per OSI-network/cluster/area, a list must be produced that includes:
  - The number of nodes per Level 1 area. (Each OLS ET, Ring Terminal, Repeater, SNMS counts as one node.)
  - The number of LANs
  - The WaveStar® OLS 1.6T nodes that are the GNEs (that is, NE that has the direct physical connection with the SNMS)
  - The number of areas
  - The number of nodes in the Level-2 subdomain
  - The number of LANs in the Level-2 subdomain
- Indication of all DCN characteristics per WaveStar® OLS 1.6T node:
  - Software release (OLS)
  - NSAP address format to be used
  - Name of the SNMS(s) (two in case of Geographic Redundancy) that must manage the NE/node
  - Node site/NSAP/TID/location/name/type
  - Only when IS-IS areas are used, identify (a) the IS-IS level [1 or 2] nodes, and (b) AreaId [0000 - ffff]
  - Only for the nodes that are connected to a LAN, the following applies: (a) LAN IS-IS level; (b) DR priority [0 - 127, default = 64] - the higher the priority, the more traffic that gets routed through the node
- Indication of all DCN characteristics per SNMS:
  - DYNAMIC Routing on the SNMS LAN.
  - LAN IS-IS Level for the nodes on the SNMS LAN.

- Site/location/name/server-type.
- The number of managed NEs.
- The maximum number of SNMS connections that are forwarded through a single node in the network, in case of a single failure. This includes the connections of all SNMSs that are part of this DCN-network.
- Percentage of activated network management operations such as Performance Monitoring, Software download, database backup and restore, provisioning and keep alive messages that would be allowed.
- Bandwidth requirement.

• Indication of all DCN characteristics per LAN:
  - The number of node
  - The number of areas
  - The number of Level 2 nodes

Rule R115

Build the OSI-network by enlarging it step by step, during installation activities at the site where the NEs are located. Up to the moment of including a node in the OSI-DCN, the OSI facility of that node is isolated by one of the following actions:

- Remove the LAN/fiber connections or interface units
- OLS: Rebooting of the System Controller (Repeater node) or Overhead Controller (Terminal node)

Rule R120

After connection of all SDL/LAN interfaces, the operator shall not leave the site, until proper remote management via those interfaces is confirmed via an SNMS connection.

Guideline G125

Wait at least 5 minutes between activities that change the topology of the OSI-DCN.

- The activities that are mentioned in ***Rule R115*** change the topology of the OSI-DCN, by enabling/disabling links that connect a node to the OSI-DCN. After such a change, all nodes in the related OSI routing domains must flush the topology change through the routing domain and must re-calculate and adapt its Routing Information Base (RIB). These activities will take several minutes to complete.
- There may be transient instabilities within the network (loss of SNMS connections). No corrective action should be taken if this instability is fairly brief and the SNMS connections are re-established within 20 minutes.

Rule R135

Network planning should include area planning and the WaveStar® OLS 1.6T should be provisioned with its Area Address before connecting it to the SNMS.

Rule R140

No SW copy/download or database backup and restore operations shall be active during the transition procedure. These activities will be interrupted by the reset mechanisms that are part of the DCN provisioning.

Guideline G145

The Area Address of an SNMS manager shall be provisioned, before the first NE is created for management by this manager in an OSI network. Avoid transition work and re-connection of SNMS to all of its managed NEs in a later stage in the OSI network. This rule does not apply if the TSB connectivity with SNMS is required.

Rule R150

The SDL and LAN connections of a node shall be disabled, until all DCN provisioning for this node is performed. Connection of nodes with invalid IS-IS parameters would imply an invalid network and routing can be disabled in other parts of the network.

Rule R155

Go clockwise and/or counter-clockwise through the ring or from one end to the other in a linear configuration when changing the AreaId.

□

SDL Provisioning

Open Ring Configuration Rules and Guidelines

Open ring configuration rules and guidelines are described in Rules 165 and 170.

Rule R165

The Express SDLs must always be terminated at the 2 End Terminals of an open ring configuration.

Rule R170

Whenever there are 9 NEs or more in an Open Ring Configuration, the Express SDLs must be terminated such that the span count between any two NEs is less than or equal to 8 spans. (For example, in a 32 node open ring configuration, the Express SDLs shall be terminated at node 1, node 9, node 17, and node 25.)

Closed Ring Configuration Rules and Guidelines

Closed ring configuration rules and guidelines are described in Rules 175 and 180.

Rule R175

If there are more than nine but less than fifteen NEs in a closed ring configuration, the Express SDLs must be terminated at the two Ring or WAD terminal nodes with equi-distance from each other.

Rule R180

If there are 15 NEs or more in a Closed Ring Configuration, the Express SDLs must be terminated such that the span count between any two NEs is less than or equal to eight spans. (For example, in a 32 node open ring configuration the Express SDLs shall be terminated at node 1, node 9, node 17, node 25.)

□

SNMS Connections

Discussion

An SNMS manager has a live end-to-end connection (association) with all of the NEs it is managing. The attachment of the SNMSs to the network should be done in the center of its management domain to minimize the average number of hops between the SNMS and the NEs.

Rules and Guidelines

Rule R185

In the OSI network, at least one of the NEs or external routers on the SNMS LAN (that is, Ethernet hub) must have the same area address as the SNMS. Refer to Figure 5-18, “Area Partitioning Example That Uses the IAO LAN Between the SNMS and NEs” (5-85).

SNMS supports only the ES-IS protocol. If this condition is not met, the rest of the OSI network will not be aware of the SNMS and communication between SNMS and NEs will not be possible. However, if TSB is used for establishing physical connectivity with SNMS via the TCP/IP network, then this rule does not apply since the

SNMS is only reachable via the TSB NE with the use of the IP address of the SNMS.

Figure 5-18 Area Partitioning Example That Uses the IAO LAN Between the SNMS and NEs

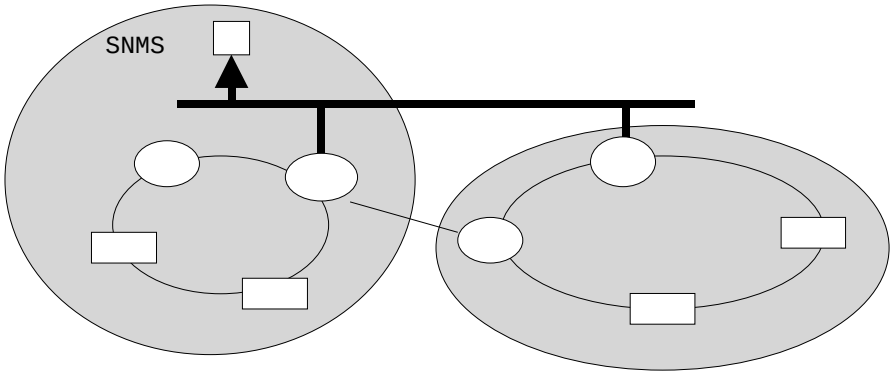

Correct partitioning example

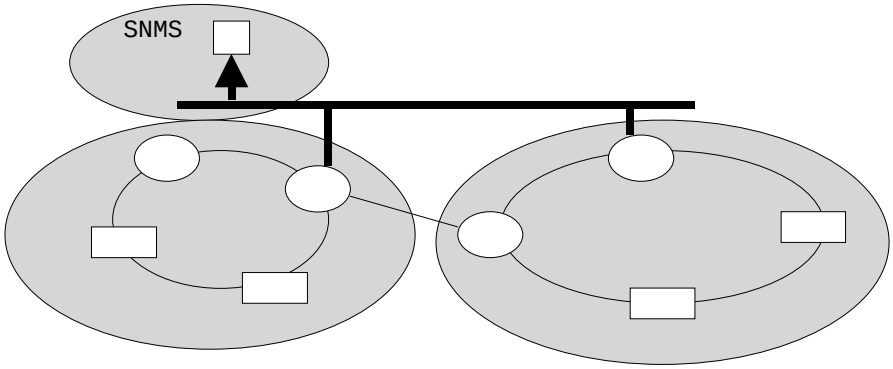

Incorrect partitioning example
SNMS is being isolated.

Guideline G190

There should be one and only one Registration Manager (RM) in each OSI Level 1 area.

The Registration Manager is used to inform the elements in its area the NSAP of the DSA or DSAs IP address and NSAP of the TSB if the TSB is used to provide connectivity with the SNMS for the purpose of directory system agent (DSA) registration.

Guideline G195

The physical connection (point of attachment) of the SNMS to the WaveStar® OLS 1.6T network should be done independently from how the WaveStar® OLS 1.6T network is divided in areas. Multiple POAs with SNMS should be used in a large network for load balancing and better network reliability.

Guideline G200

At least two nodes that reside on a separate LAN should be served as primary and secondary TSBs for each Level 1 area.

For improving the network reliability in case one transport bridge fails, SNMS can detect the failure and automatically re-establish its connections to the NEs using the secondary transport bridge.

Rule R205

Do not attach SNMS to an open or closed ring subnetwork until all network installation/integration activities for the maintenance subnetwork are completed and the Ring Map has built for that subnetwork. All installation/integration activities must be performed by following the provisioning guidelines as per the SNMS Integration Manual.

Rule R210

Do not manually perform any SNMS DNO operations on an open or closed ring subnetwork until SNMS has established communications with ALL NEs within that subnetwork.

Rule R215

Do not manually perform any SNMS DNOs on any NEs within an open or closed ring subnetwork while there are DCN related alarms present within that subnetwork or the software upgrade procedure is in progress within the subnetwork.

Rule R220

Whenever a SNMS/DCN WAN attachment (for example, router) is made to a given subnetwork, it shall always be attached to an End/Ring/WAD Terminal that has the Express SDL terminated.

Rule R225

Do not manually perform any simultaneous performance data collection from the SNMS on an open or closed ring subnetwork.

□

6 Bay Configurations

Overview

Purpose

All operation, maintenance, and installation activities can be accessed from the front of the WaveStar® OLS 1.6T system. Front access provides greater flexibility and facilitates equipment placement in physically restricted locations, and gives the WaveStar® OLS 1.6T the smallest footprint in the industry. WaveStar® OLS 1.6T components are housed in compact bays or mounted shelf packages. This chapter provides information on component configurations.

Contents

Bays	6-3
Bay Configuration Philosophy	6-5
Bay Configurations	6-7
Available Configuration	6-8
2-Fiber End Terminal	6-9
2-Fiber Ring Terminal	6-11
2-Fiber WAD Terminals	6-14
2-Fiber Repeater	6-16
Floor Plan Data —Lucent Seismic Bay Frameworks	6-17
System Bay	6-18

Complementary Bay	6-21
Growth Bay	6-24
Floor Plan Data Sheets —2200 mm ETSI Seismic Frame	6-27
System Bay	6-28
Complementary Bay	6-32
Growth Bay	6-36
Floor Plan Data —Miscellaneously Mounted Shelves	6-39
2-Fiber Repeater	6-40

Bays

Overview

Purpose

This chapter provides information on bay types and components, and a bay configuration philosophy.

Bay Types and Components

All WaveStar® OLS 1.6T circuit packs and related circuitry are mounted in specialized bays. Available bays are:

- Seven-Foot-High Lucent Seismic Network Bay Frameworks:
  - System Bay
  - Complementary Bay
  - Growth Bay
- 2200-mm-High ETSI Seismic Cabinets:
  - System Bay
  - Complementary Bay
  - Growth Bay

Refer to Table 6-1, “Bays and Components” (6-3) for a list of bays and components that are available for the WaveStar® OLS 1.6T.

Table 6-1 Bays and Components

Bay	Components
System	• Complementary Shelf with Fan Assembly below • System Shelf with Heat Baffle (with Dust Filter) below • Bay Control Shelf • Air Intake (without Dust Filter) • Four DCM Housings (empty) • Fiber Storage Housing

Table 6-1 Bays and Components (continued)

Bay	Components
Complementary	• Complementary Shelf with Fan Assembly below • Complementary Shelf with Heat Baffle (with Dust Filter) below • Bay Control Shelf • Air Intake (without Dust Filter) • 4 DCM Housings (empty) • Fiber Storage Housing
Growth	• Complementary Shelf • Bay Control Shelf with Fan Assembly above it, and Heat Baffle and Dust Filter below it • Complementary Shelf and Fan Assembly below • Air Intake (with Dust Filter) • Fiber Storage Housing

□

Bay Configuration Philosophy

OTU Assignments

The figures in the following sections illustrate OTU assignments using the following guidelines:

- Adjacent slots are shown, but are not required.
- For maximum network reliability, 2-fiber ring terminal configurations keep the 1E and 1W line OTUs in separate bays. (The same lines are not always kept together in all bays within the same system.).
- For maximum density, bays are fully filled without keeping the number of channels per line the same for each bay.

The user is not required to install OTUs using the guidelines listed here. The ″association″ command permits the user to place any OTU for any line, in any slot, in any shelf, in any bay, provided the slot is not in Shelf 1 of a System Bay or a Complementary Bay, AND is not ″reserved″ by the NETYPE for any of the following circuit packs:

- Optical Amplifier (OA)
- Optical Multiplexer Unit (OMU)
- Optical Demultiplexer Unit (ODU)
- Optical MONitor (OMON)
- Supervisory (SUPVY)
- Bay Overhead and System (BOS)
- External Interface (EI)

Multiple Line-Up Arrangement

The preferred bay line-up arrangement for OLS 1.6T is a single adjacent bay lineup. Note that the system bay and any complementary bay must be located next to each other in the same lineup because of the red fiber kits between these bays.

As an alternative bay line-up arrangement of OLS 1.6T, growth bays are now permitted in facing or back-to-back lineups relative to the system/complementary bay lineup. The BC LAN control cable must not exceed 70 ft (the 70-ft cable is ordered separately.) This approximately equates to 55 ft maximum cable length from the top center (bottom center) of the system bay to the top center (bottom center) of the furthest associated growth bay for overhead (raised floor) cabling. The growth of the lineup(s) should be in one direction only, left or right but not both. (Growth direction for a multiple lineup

is defined as bay numerical growth direction relative to facing the front of Bay 1, right growth, as shown below.)

In the case of overhead cabling, the intrabay duplex yellow fiber cables from the growth bays in the facing/backing lineup must be engineered for routing and slack storage in the overhead cable rack.

In the case of a raised floor, the intrabay duplex yellow fiber cables from the growth bays in a facing/backing lineup must be engineered for routing below the floor. However, the slack storage can be done in the bottom bay fiber storage trays just as with the preferred single lineup arrangement.

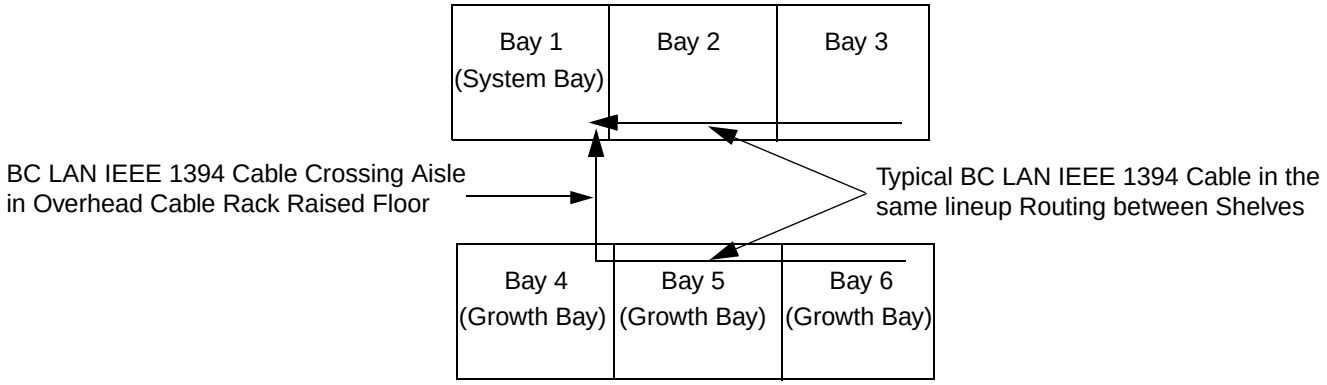

□

Bay Configurations

Overview

Purpose This section provides information on the following:

- 2-Fiber End Terminals
- 2-Fiber Ring Terminals
- 2-Fiber WAD Terminals (Type 2 and Full Add/Drop)
- 2-Fiber Repeaters
- Floor Plan Data Sheets

□

Available Configuration

2-Fiber Configuration

WaveStar® OLS 1.6T circuit packs, bays, and miscellaneous hardware may be combined to create the following 2-Fiber Network Elements:

- 2-Fiber End Terminal
- 2-Fiber Ring Terminal
- 2-Fiber WAD Terminal

Important! All bays of Network Element growth bays can be positioned for multiple lineups. See "Multiple Line-Up Arrangement" (6-5) for more details.

□

2-Fiber End Terminal

Minimum Bay Requirements

A minimum of one System Bay is required to configure a 2-Fiber End Terminal.

System Capacity

Refer to Table 6-2, “System Capacity and Available Slots Versus Configured Bays” (6-9) for System Capacity and available slot information versus number of bays configured.

Table 6-2 System Capacity and Available Slots Versus Configured Bays

Number of Bays	System Capacity	Total Unpopulated Slots Reserved for CLSC
1	12 Channels	1
2	46 Channels	1
3	80 Channels	1

WaveStar® OLS 1.6T Bay Configuration Diagram

See Figure 6-1, "Typical WaveStar® OLS 1.6T 2-Fiber End Terminal" (6-10) for a view of the Bay Configuration for a typical 2-Fiber End Terminal in the C-Band. Note that Figure 6-1 depicts a configuration with basic transmit/receive capability. Therefore, only OC-48/STM-16 and OC-192/STM-64 OTUs are shown, without ORS. The L-Band configuration is identical to the C-Band configuration; the only difference is that L-Band transmission circuit packs (OA1L, OMU1L/2L, ODU21/22, OMON1L, and SUPVY1L) are used.

Figure 6-1 Typical WaveStar® OLS 1.6T 2-Fiber End Terminal

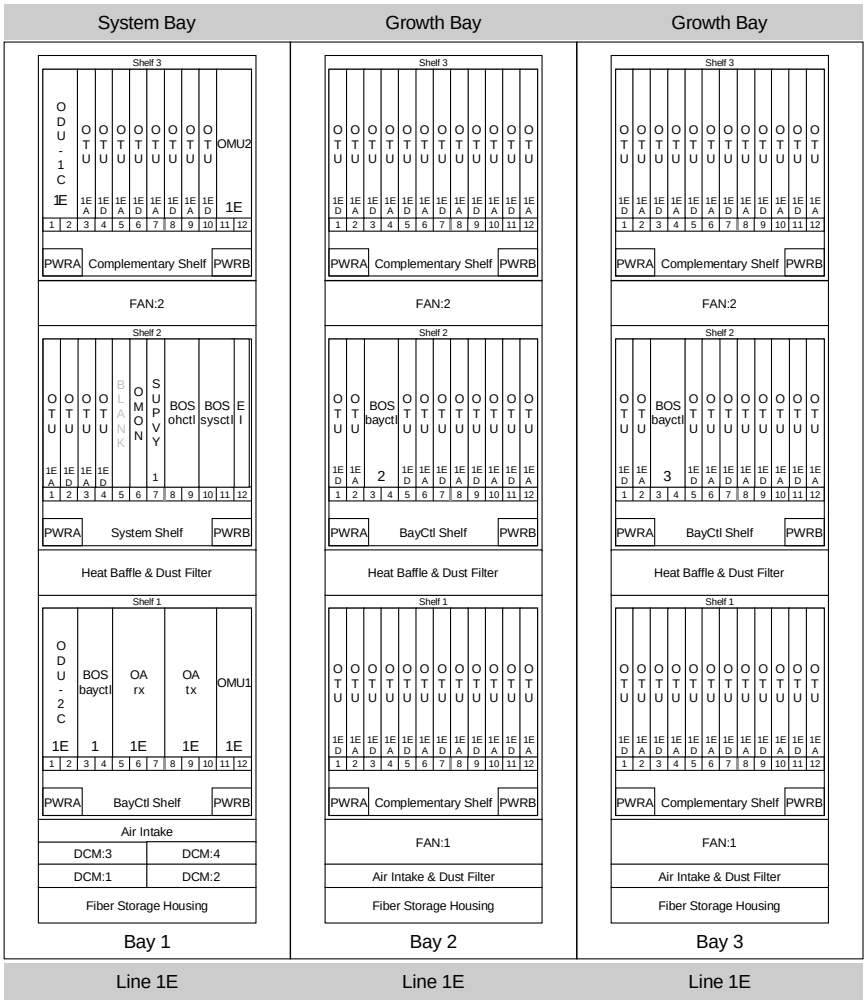

Important! In Bay 1, Shelf 2, Slot 5 a CLSC-S is needed for a 1.6T or 1.6T-ready system.

□

2-Fiber Ring Terminal

Minimum Bay Requirements

A minimum of one System Bay and one Complementary Bay is required to configure a 2-Fiber Ring Terminal capabilities.

System Capacity

Refer to Table 6-3, “System Capacity and Available Slots Versus Configured Bay” (6-11) for System Capacity and available slot information versus number of Bays configured. Note that Figure 6-1 depicts a configuration with basic transmit/receive capability. Therefore, only OC-48/STM-16 and OC-192/STM-64 OTUs are shown, without the ORS. The L-Band configuration is identical to the C-Band configuration; the only difference is that L-Band transmission circuit packs (OA1L, OMU1L/2L, ODU21/22, OMON1L, and SUPVY1L) are used.

Table 6-3 System Capacity and Available Slots Versus Configured Bay

Number of Bays	System Capacity	Total Unpopulated Slots (1 Slot reserved for CLSC)
2	32 channels	1
3	66 channels	1
4	100 channels	1
5	134 channels	1
6	160 channels	9

Important! In Bay 1, Shelf 2, Slot 5 and Bay 2, Shelf 2, Slot 5 a CLSC-S is needed for a 1.6T or 1.6T-ready system.

Bay Configuration Diagram

See Figure 6-2, “Typical WaveStar® OLS 1.6T 2-Fiber Ring Terminal (Bays 1 through 3)” (6-12) and Figure 6-3, “Typical WaveStar® OLS 1.6T 2-Fiber Ring Terminal (Bays 4 through 6)” (6-13) for a view of the Bay Configuration for a Typical 2-Fiber Ring Terminal capabilities.

Figure 6-2 Typical WaveStar® OLS 1.6T 2-Fiber Ring Terminal (Bays 1 through 3)

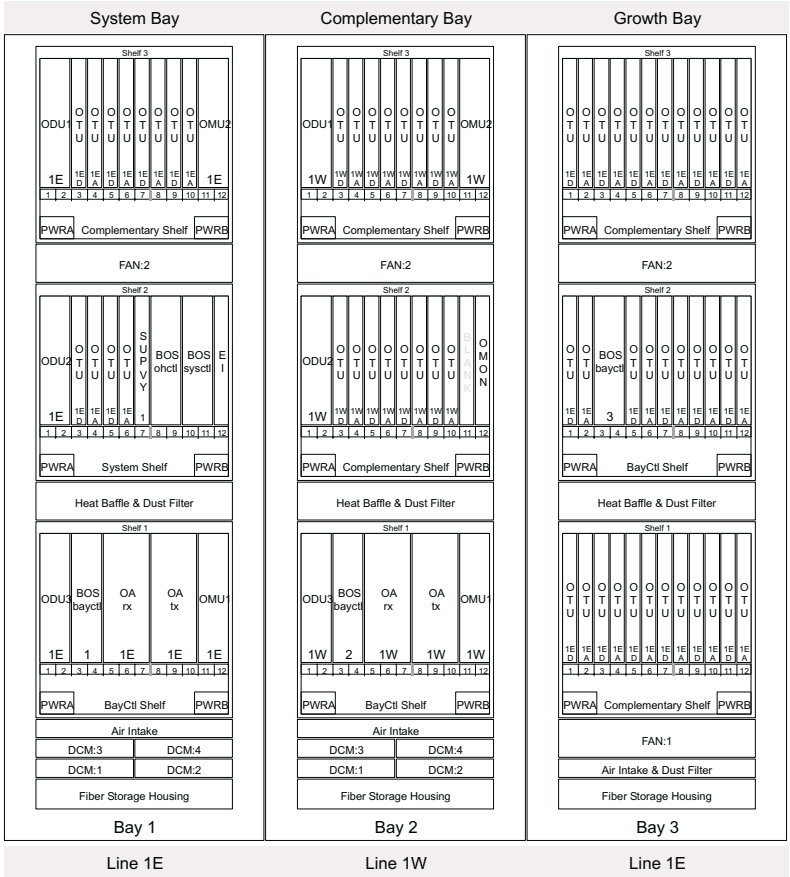

Figure 6-3 Typical WaveStar® OLS 1.6T 2-Fiber Ring Terminal (Bays 4 through 6)

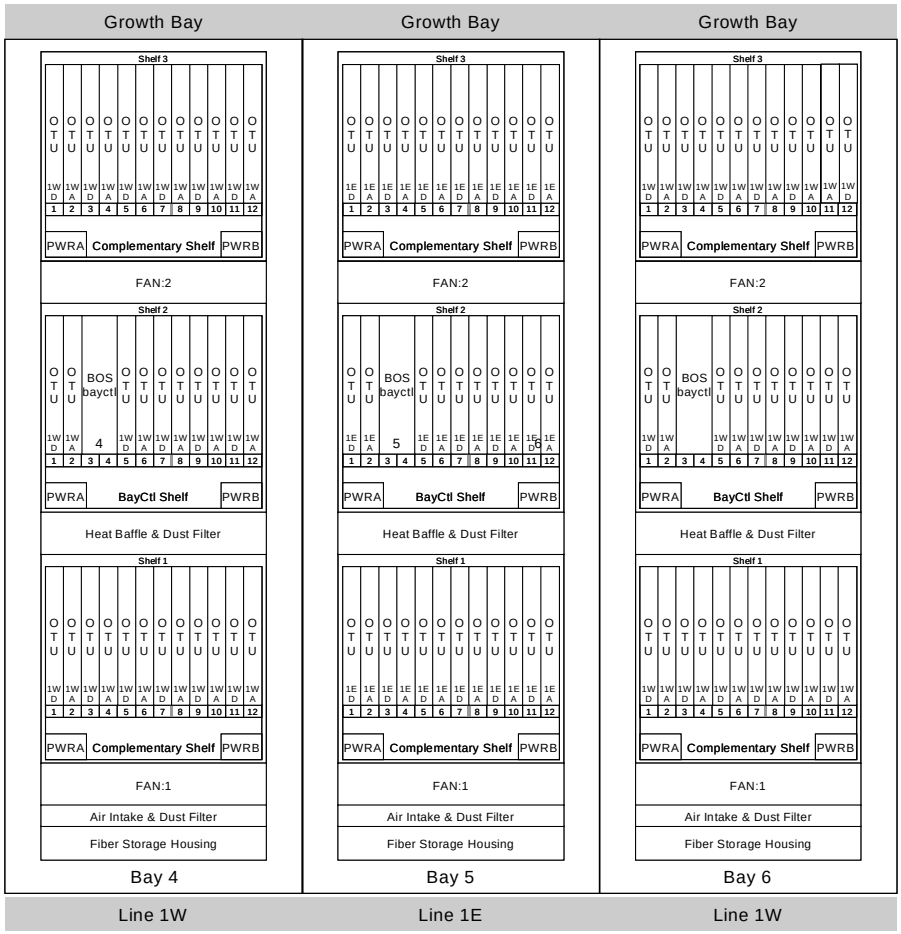

2-Fiber WAD Terminals

WAD Type 2 Minimum Bay Requirements

WAD Type 2 Terminals are engineered to fit into a single bay configuration, as shown in the figure below.

Figure 6-4 Bay Configuration for 2-Fiber WAD Type 2 Terminal (C-Band)

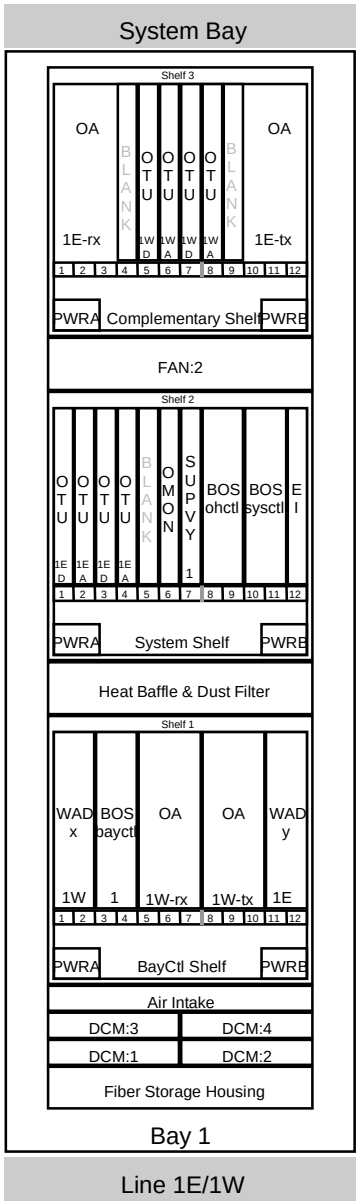

Important! In Shelf 3, Slots 4 and 9, two CLSC-Ss are needed for a 1.6T system. The OAs in Shelf 3, Slots 1-3, and Shelf 1, Slots 5-7, must be WAD Receive-type OAs.

System Capacity

Table 6-4 gives system capacity and available slot information for a WAD Type 2.

Table 6-4 System Capacity and Available Slots Versus Configured Bay WAD Type 2

	Number of Bays	System Capacity	Total Unpopulated Slots(2 Slots Reserved for Optional CLSCs)
WAD Type 2	1	4 Channels 1E 4 Channels 1W	3

2-Fiber Repeater

Minimum Shelf Requirements

A minimum of one Miscellaneously Mounted Repeater Shelf is required to configure a 2-Fiber Repeater. One Repeater Shelf is needed for C-Band and one is needed for L-Band. DCMs may also be required. Note that for a WaveStar® OLS 1.6T system (or 1.6T-ready system), a CLSC-D must be deployed in Slot 7 in either the C-Band or L-Band repeater shelf.

Other Information

OS access for this repeater is provided from terminals at either end of the lines.

Shelf Configuration Diagram

See Figure 6-5, “ 2-Fiber Repeater” (6-16) for a view of the shelf configuration for a typical 2-Fiber Repeater for C-Band. The L-Band configuration is identical, except that circuit packs OA1L and SUPVY1L are deployed..

Figure 6-5 2-Fiber Repeater

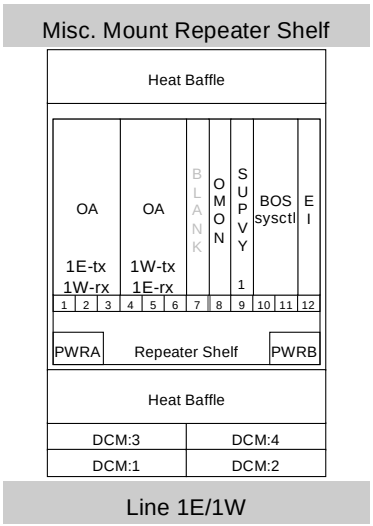

Important! A CLSC-D is needed in Slot 7 for a 1.6T or 1.6T-ready system, either in the C-Band or L-Band repeater shelf.

□

Floor Plan Data —Lucent Seismic Bay Frameworks

Overview

Purpose This section provides information on system bays, complementary bays, and growth bays for Lucent Seismic Bay Frameworks. This information applies to both C-Band and L-Band configurations.

□

System Bay

Overview

This section provides information about the System Bay of a WaveStar® OLS 1.6T systerm installed on a Lucent Seismic Network Bay Framework. Except for Repeater applications, only one System Bay is required for all WaveStar® OLS 1.6T terminal configurations.

Framework Dimensions

Figure 6-6, "System Bay — Lucent Seismic Network Bay Framework" (6-18) shows the dimensions of a Lucent Seismic Network Bay Framework System Bay.

Figure 6-6 System Bay — Lucent Seismic Network Bay Framework

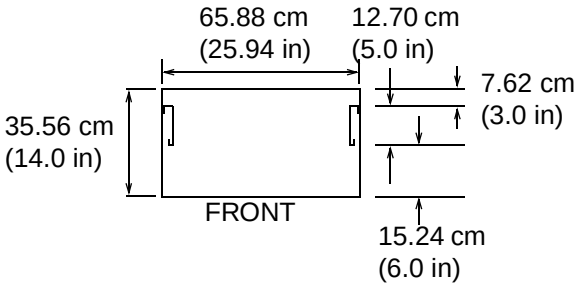

Frame Lineup

Figure 6-7, "System Bay — Framework Line-Up" (6-18) shows Framework Lineup information for a System Bay.

Figure 6-7 System Bay — Framework Line-Up

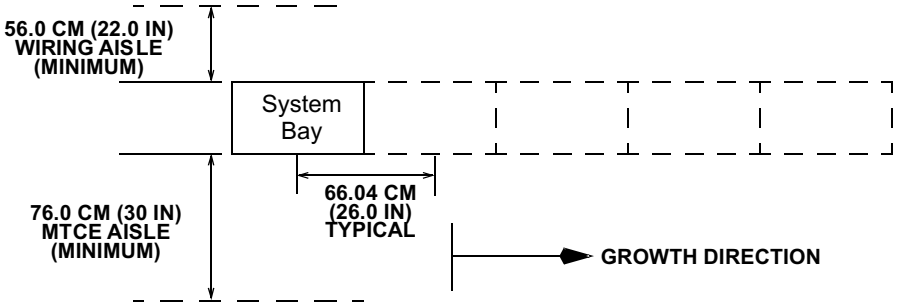

Physical Data

Refer to Table 6-5, "Lucent Seismic System Bay Physical Data" (6-19) for Lucent Seismic System Bay Physical Data.

Table 6-5 Lucent Seismic System Bay Physical Data

Parameter	Value
NEBS Compatible	Yes
Height	213.36 cm (84.00 in)
Depth	35.56 cm (14.00 in)
Actual Width	65.88 cm (25.94 in)
Effective Width	66.04 cm (26.0 in)
Weight	450 lbs
Framework Type	SEIS NET BAY
Minimum Front Aisle	76.2 cm (30.00 in)
Minimum Rear Aisle	55.88 cm (22.00 in)

Cabling Data

Refer to Table 6-6, “Lucent Seismic System Bay Cabling Data” (6-19) for Lucent Seismic System Bay Cabling Data

Table 6-6 Lucent Seismic System Bay Cabling Data

Shield or Class	Effective Cable Area (sq. in)
3	3.0
4	1.5

Heat Dissipation

Refer to Chapter 7, “Technical Specifications”, for Heat Dissipation Data.

DC Current Drains

Refer to Chapter 7, “Technical Specifications”, for DC Current Drain Data.

Notes

The following information pertains to a System Bay installed on a Lucent Seismic Network Bay Framework.

1. This bay can be installed in a Central Office (overhead cable racking or raised floor applications), Controlled Environmental Vault (CEV), or other customer premises that meet the Central Office or CEV requirements.
2. This bay uses the Lucent Seismic Network Bay Framework with a 6-inch front guard rail, 3-inch rear guard rail, and the narrow flange facing forward, as shown in Figure 6-6, “System Bay — Lucent Seismic Network Bay Framework” (6-18).

3. Refer to Table 6-5, “Lucent Seismic System Bay Physical Data” (6-19) and Figure 6-7, “System Bay — Framework Line-Up” (6-18). This bay only needs front access for normal maintenance activity. Access to the rear of the bay is helpful for infrequent repair activities, such as backplane pin replacement. The 22-inch minimum rear aisle spacing should be used when the bays are located in an existing 12-inch-deep lineup. Otherwise, a 24-inch rear aisle spacing is recommended for all other applications.
4. See Figure 6-7, “System Bay — Framework Line-Up” (6-18) for typical bay spacing. The system bay and its complimentary bay (Ring Terminal) must be adjacent in order to use standard bay fiber kits for intrasystem connections.
5. See “Multiple Lineup Arrangement” (6-26) for Growth Bay placement.
6. On the drop-side of the system, the transmission signals are connected with single mode fibers to the OTUs. On the line-side of the system, the transmission signals are connected with single mode fiber to the Lightguide Distribution System (LDS) equipment. Although the fiber cable jumpers between the drop-side and line-side equipment are available in custom-ordered lengths up to 3300 ft (1000 m), it is recommended that the WaveStar® OLS 1.6T equipment be located close to its drop-side and line-side equipment to minimize the lengths of the fiber jumpers needed, thereby allowing the use of standard lengths.
7. For a standard Central Office-type lineup installation, the overhead cable racking must conform to the NEBS Cable Pathways Plan per GR-63-CORE for proper cooling reasons. The overhead cable racking systems either comply or can be engineered to comply with this standard. For color coordination, line-up cable rack covers painted Central Office Soft Blue are recommended.
8. A and B power feeders are required to be connected to the bay. Both feeders should be fed from a different bus load at the BDFB (or equivalent.) Refer to Chapter 7, “Technical Specifications”, to size feeders and fuses.
9. Because the lightwave terminal bays dissipate more than 60-Watts per square foot of allotted area, consult the Lucent Practice 760-130-xxx Series for additional cooling information.

□

Complementary Bay

Overview

This section provides information about the Complementary Bay of a WaveStar® OLS 1.6T installed on a Lucent Seismic Network Bay Framework.

Framework Dimensions

Figure 6-8, "Complementary Bay — Lucent Seismic Network Bay Framework" (6-21) gives the dimensions of a Lucent Seismic Network Bay Framework Complementary Bay.

Figure 6-8 Complementary Bay — Lucent Seismic Network Bay Framework

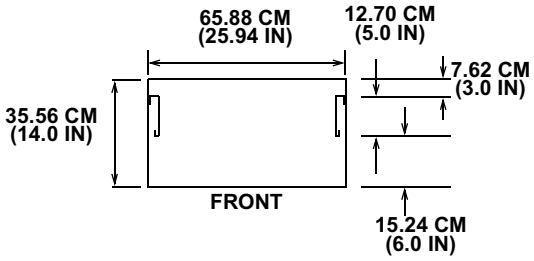

Frame Lineup

See Figure 6-9, "Complementary Bay — Framework Line-Up" (6-21) for Framework Lineup information.

Figure 6-9 Complementary Bay — Framework Line-Up

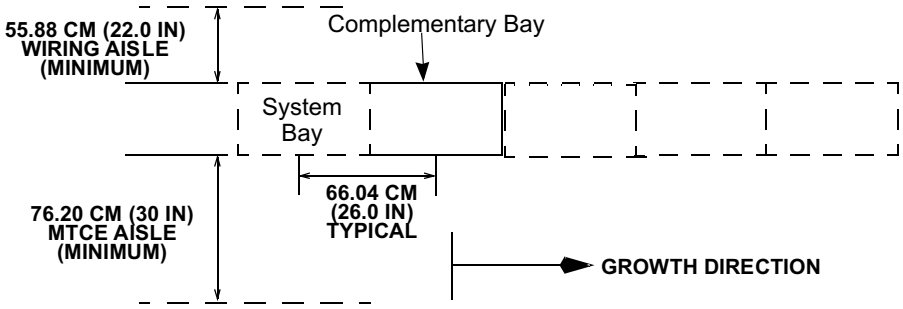

Physical Data

Refer to Table 6-7, "Lucent Seismic Complementary Bay Physical Data" (6-22) for Lucent Seismic Complementary Bay Physical Data.

Table 6-7 Lucent Seismic Complementary Bay Physical Data

Parameter	Value
NEBS Compatible	Yes
Height	213.36 cm (84.00 in)
Depth	35.56 cm (14.00 in)
Actual Width	65.88 cm (25.94 in)
Effective Width	66.04 cm (26.0 in)
Weight	450 lbs
Framework Type	SEIS NET BAY
Minimum Front Aisle	76.2 cm (30.00 in)
Minimum Rear Aisle	55.88 cm (22.00 in)

Cabling Data

Refer to Table 6-9 for Lucent Seismic Complementary Bay Cabling Data.

Table 6-8 Lucent Seismic Complementary Bay Cabling Data

Shield or Class	Effective Cable Area (sq. in)
3	3.0
4	1.5

Heat Dissipation

Refer to Chapter 7, “Technical Specifications”, for Heat Dissipation Data.

DC Current Drains

Refer to Chapter 7, “Technical Specifications”, for DC Current Drain Data.

Notes

The following information pertains to a Complementary Bay installed on a Lucent Seismic Network Bay Framework.

1. This bay can be installed in a Central Office (overhead cable racking or raised floor applications,) CEV, or customer premises that meet the Central Office or CEV requirements.
2. This bay uses the Lucent Seismic Network Bay Framework with a 6-inch front guard rail, 3-inch rear guard rail, and the narrow flange facing forward, as shown in Figure 6-8, “Complementary Bay — Lucent Seismic Network Bay Framework” (6-21).

3. Refer to Table 6-7, “Lucent Seismic Complementary Bay Physical Data” (6-22) and Figure 6-9, “Complementary Bay — Framework Line-Up” (6-21). This bay only needs front access for normal maintenance activity. Access to the rear of the bay is helpful for infrequent repair activities, such as backplane pin replacement. The 22-inch minimum rear aisle spacing should be used when the bays are located in an existing 12-inch-deep lineup. Otherwise, a 24-inch rear aisle spacing is recommended for all other applications.
4. See Figure 6-9, “Complementary Bay — Framework Line-Up” (6-21). This bay and its associated system bay must be located adjacent to each other without any space between the bays (26-inches on center.) This allows the use of standard bay fiber kits for intrasystem connections.
5. See “Multiple Lineup Arrangement” (6-26) for Growth Bay placement.
6. On the drop-side of the system, the transmission signals are connected with single mode fibers to the OTUs. On the line-side of the system, the transmission signals are connected with single mode fiber to the LDS equipment. Although the fiber cable jumpers between the drop-side and line-side equipment are available in custom-ordered lengths up to 3300 ft (1000 m), it is recommended that the WaveStar® OLS 1.6T equipment be located close to its drop-side and line-side equipment to minimize the lengths of the fiber jumpers needed, thereby allowing the use of standard lengths.
7. For a standard Central-Office-Type line-up installation, the overhead cable racking must conform to the NEBS Cable Pathways Plan per GR-63-CORE for proper cooling reasons. The overhead cable racking systems either comply, or can be engineered to comply, with this standard. For color coordination, lineup cable rack covers painted Central Office Soft Blue are recommended.
8. A and B power feeders are required to be connected to the bay. Both feeders should be fed from a different bus load at the BDFB (or equivalent.) Refer to Chapter 7, “Technical Specifications”, to size feeders and fuses.
9. Because the lightwave terminal bays dissipate more than 60-Watts per square foot of allotted area, consult the Lucent Practice 760-130-xxx Series for additional cooling information.

□

Growth Bay

Overview

This section provides information about the Growth Bay of a WaveStar® OLS 1.6T installed on a Lucent Seismic Network Bay Framework.

Framework Dimensions

Figure 6-10, "Growth Bay — Lucent Seismic Network Bay Framework" (6-24) gives the dimensions of a Lucent Seismic Network Bay Framework Growth Bay.

Figure 6-10 Growth Bay — Lucent Seismic Network Bay Framework

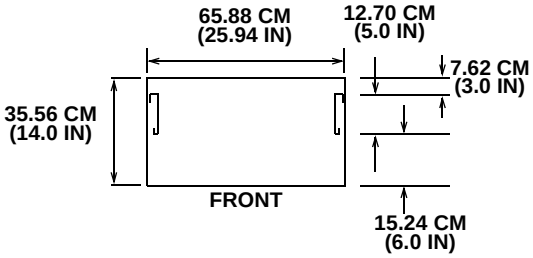

Physical Data

Refer to Table 6-9, "Lucent Seismic Growth Bay Physical Data" (6-24) for Lucent Seismic Bay Framework Growth Bay physical data.

Table 6-9 Lucent Seismic Growth Bay Physical Data

Parameter	Value
NEBS Compatible	Yes
Height	213.36 cm (84.00 in)
Depth	35.56 cm (14.00 in)
Actual Width	65.88 cm (25.938 in)
Effective Width	66.04 cm (26.0 in)
Weight	450 lbs
Framework Type	SEIS NET BAY
Minimum Front Aisle	76.2 cm (30.00 in)
Minimum Rear Aisle	55.88 cm (22.00 in)

Cabling Data

Refer to Table 6-11 for informatoin on Lucent Seismic Growth Bay cabling data.

Table 6-10 Lucent Seismic Growth Bay Cabling Data

Shield or Class	Effective Cable Area (sq. in)
3	3.0
4	1.5

Heat Dissipation

Refer to Chapter 7, "Technical Specifications", for Heat Dissipation Data.

DC Current Drains

Refer to Chapter 7, "Technical Specifications", for DC Current Drain Data.

Notes

The following information pertains to a Growth Bay installed on a Lucent Seismic Network Bay Framework.

1. This bay can be installed in a Central Office (overhead cable racking or raised floor applications), CEV, or other customer premises that meet the Central Office or CEV requirements.
2. This bay uses the Lucent Seismic Network Bay Framework with a 6-inch front guard rail, 3-inch rear guard rail, and the narrow flange facing forward, as shown in Figure 6-10, "Growth Bay — Lucent Seismic Network Bay Framework" (6-24).
3. Refer to Table 6-9, "Lucent Seismic Growth Bay Physical Data" (6-24) and Figure 6-10, "Growth Bay — Lucent Seismic Network Bay Framework" (6-24). This bay only needs front access for normal maintenance activity. Access to the rear of the bay is helpful for infrequent repair activities, such as backplane pin replacement. The 22-inch minimum rear aisle spacing should be used when the bays are located in an existing 12-inch-deep lineup. Otherwise, a 24-inch rear aisle spacing is recommended for all other applications.
4. On the drop-side of the system, the transmission signals are connected with single mode fibers to the OTUs. On the line-side of the system, the transmission signals are connected with single mode fiber to the LDS equipment. Although the fiber cable jumpers between the drop-side and line-side equipment are

available in custom-ordered lengths up to 3300 ft (1000 m), it is recommended that the WaveStar® OLS 1.6T equipment be located close to its drop-side and line-side equipment to minimize the lengths of the fiber jumpers needed, thereby allowing the use of standard lengths.

5. For a standard Central-Office-Type lineup installation, the overhead cable racking must conform to the NEBS Cable Pathways Plan per GR-63-CORE for proper cooling reasons. The overhead cable racking systems either comply, or can be engineered to comply, with this standard. For color coordination, line-up cable rack covers painted Central Office Soft Blue are recommended.
6. A2, B2, A1, and B1 power feeders are required to be connected to the bay. The A2 and A1 feeder set should be fed from a different bus load at the BDFB (or equivalent) than the B2 and B1 feeder Set. Refer to Chapter 7, “Technical Specifications”, to size feeders and fuses
7. Because the lightwave terminal bays dissipate more than 60-Watts per square foot of allotted area, consult the Lucent Practice 760-130-xxx Series for additional cooling information.

Multiple Lineup Arrangement

As stated earlier, the preferred bay line-up arrangement for OLS is a single adjacent bay lineup. Note that the system bay and any complementary bay must be located in the same lineup because of the red fiber kits between these bays.

As an alternative bay line-up arrangement for OLS, growth bays are now permitted in facing or back-to-back lineups relative to the system/complementary bay lineup. See “Multiple Line-Up Arrangement” (6-5) for more details.

□

Floor Plan Data Sheets —2200 mm ETSI Seismic Frame

Overview

Purpose This section provides information on system bays, complementary bays, and growth bays for the 2200 mm ETSI Seismic Frame.

□

System Bay

Overview

This section provides information about the System Bay of a WaveStar® OLS 1.6T installed on a 2200 mm ETSI Seismic Frame. Except for Repeater applications, one (and only one) System Bay is required for all WaveStar® OLS 1.6T Terminal configurations.

Cabinet Dimensions

See Figure 6-11, "System Bay — 2200 mm ETSI Seismic Frame Dimensions" (6-28) for the dimensions of a 2200 mm ETSI Seismic Frame System Bay.

Figure 6-11 System Bay — 2200 mm ETSI Seismic Frame Dimensions

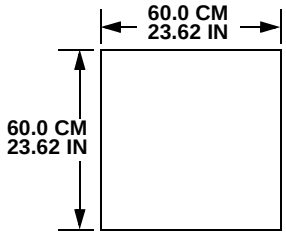

Frame Lineup

See Figure 6-12, "System Bay — 2200 mm ETSI Seismic Frame Lineup" (6-28) for frame lineup information.

Figure 6-12 System Bay — 2200 mm ETSI Seismic Frame Lineup

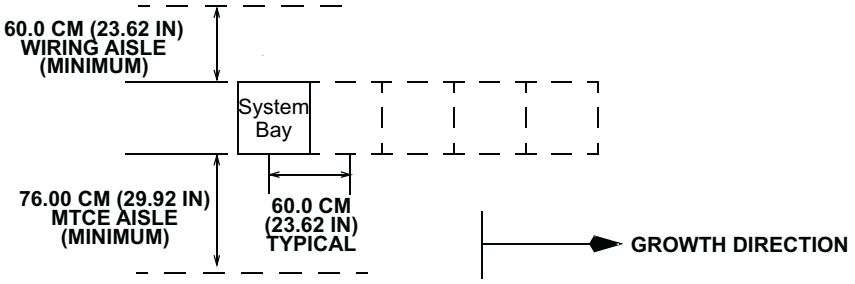

Physical Data

Refer to Table 6-11, "2200 mm ETSI Seismic Frame — System Bay Physical Data" (6-29) for 2200 mm ETSI Seismic Frame System Bay physical data.

Table 6-11 2200 mm ETSI Seismic Frame — System Bay Physical Data

Parameter	Value
ETSI Compatible	Yes
Height	220.0 cm (86.61 in)
Depth	60.0 cm (23.62 in)
Actual Width	59.85 cm (23.56 in)
Effective Width	60.0 cm (23.62 in)
Weight	225 kg (496.0 lbm)
Framework Type	2200 mm ETSI SEIS CAB
Minimum Front Aisle	76.0 cm (29.92 in)
Minimum Rear Aisle	60.0 cm (23.62 in)

Cabling Data

Refer to Table 6-12, “2200 mm ETSI Seismic Frame — System Bay Cabling Data” (6-29) for relevant 2200 mm ETSI Seismic Frame cabling data.

Table 6-12 2200 mm ETSI Seismic Frame — System Bay Cabling Data

Shield or Class	Effective Cable Area
3	19.00 sq cm (2.95 sq in)
4	9.50 sq cm (1.47 sq in)

Heat Dissipation

Refer to Chapter 7, “Technical Specifications”, for Heat Dissipation Data.

DC Current Drains

Refer to Chapter 7, “Technical Specifications”, for DC Current Drain Data.

Notes

The following information pertains to a System Bay installed in a 2200 mm ETSI Seismic Cabinet.

1. This bay can be installed in a Central Office (overhead cable racking or raised floor applications), CEV, or other customer premises that meet the Central Office or CEV requirements.
2. This bay uses an ETSI Seismic Frame that is 60-cm (23.62-in) wide, 60-cm (23.62-in) deep, and 220-cm (86.61-in) high. See Figure 6-11, “System Bay — 2200 mm ETSI Seismic Frame Dimensions” (6-28).

3. Refer to Table 6-11, "2200 mm ETSI Seismic Frame — System Bay Physical Data" (6-29) and Figure 6-12, "System Bay — 2200 mm ETSI Seismic Frame Lineup" (6-28). This bay only needs front access for normal maintenance activity. Access to the rear of the bay is helpful for infrequent repair activities, such as backplane pin replacement. The 60-cm minimum rear aisle spacing should be used when the bays are located in a 60-cm lineup.
4. See Figure 6-12, "System Bay — 2200 mm ETSI Seismic Frame Lineup" (6-28) for typical bay spacing. This bay and its associated Complementary Bay (Ring Terminal) must be located adjacent to each other without any space between the bays (60-cm on center). This allows the use of standard bay fiber kits for intrasystem connections.
5. See "Multiple Lineup Arrangement" (6-26) for Growth Bay placement.
6. On the drop-side of the system, the transmission signals are connected with single mode fibers to the OTUs. On the line-side of the system, the transmission signals are connected with single mode fiber to the LDS equipment. Although the fiber cable jumpers between the drop-side and line-side equipment are available in custom-ordered lengths up to 3300 ft (1000 m), it is recommended that the WaveStar® OLS 1.6T equipment be located close to its drop-side and line-side equipment to minimize the lengths of the fiber jumpers needed, thereby allowing the use of standard lengths.
7. For a standard Central-Office-Type line-up installation, the overhead cable racking must not block the forced-air cooling flow leaving the top of the cabinet. For color coordination, line-up cable rack covers painted Central Office Soft Blue are recommended.
8. A and B power feeders are required to be connected to the bay. Both feeders should be fed from a different bus load at the BDFB (or equivalent). Refer to Chapter 7, "Technical Specifications", to size feeders and fuses.

9. The current drains indicated in Chapter 7, “Technical Specifications”, assume -48 Volt operation. If -60 Volt operation is used, current drains should be reduced accordingly assuming constant power operation.
10. Because the lightwave terminal bays dissipate more than 60-Watts per square foot of allotted area, consult the Lucent Practice 760-130-xxx Series for additional cooling information.

□

Complementary Bay

Overview

This section provides information about the Complementary Bay of a WaveStar® OLS 1.6T installed on a 2200 mm ETSI Seismic Frame. See Figure 6-14, "Complementary Bay — 2200 mm ETSI Seismic Frame Lineup" (6-32) for the Bay Lineup Arrangement.

Frame Dimensions

See Figure 6-13, "Complementary Bay — 2200 mm ETSI Seismic Frame Dimensions" (6-32) for the dimensions of a 2200 mm ETSI Seismic Frame Complementary Bay.

Figure 6-13 Complementary Bay — 2200 mm ETSI Seismic Frame Dimensions

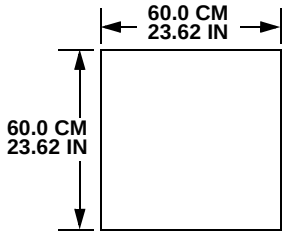

Frame Lineup

See Figure 6-14, "Complementary Bay — 2200 mm ETSI Seismic Frame Lineup" (6-32) for Frame Lineup information.

Figure 6-14 Complementary Bay — 2200 mm ETSI Seismic Frame Lineup

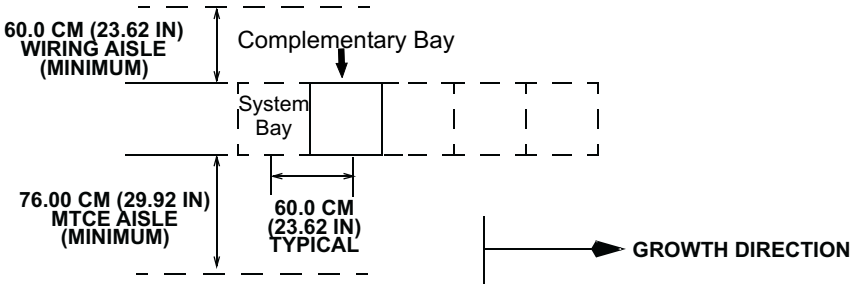

Physical Data

Refer to Table 6-13, "2200 mm ETSI Seismic Frame — Complementary Bay Physical Data" (6-33) for 2200 mm ETSI Seismic Frame System Bay physical data.

Table 6-13 2200 mm ETSI Seismic Frame — Complementary Bay Physical Data

Parameter	Value
ETSI Compatible	Yes
Height	220.0 cm (86.61 in)
Depth	60.0 cm (23.62 in)
Actual Width	59.85 cm (23.56 in)
Effective Width	60.0 cm (23.62 in)
Weight	225 kg (496.0 lbm)
Framework Type	2200 mm ETSI SEIS CAB
Minimum Front Aisle	76.0 cm (29.92 in)
Minimum Rear Aisle	60.0 cm (23.62 in)

Cabling Data

Refer to Table 6-14, “2200 mm ETSI Seismic Frame — System Bay Cabling Data” (6-33) for relevant Cabling Data.

Table 6-14 2200 mm ETSI Seismic Frame — System Bay Cabling Data

Shield or Class	Effective Cable Area
3	19.00 sq cm (2.95 sq in)
4	9.50 sq cm (1.47 sq in)

Heat Dissipation

Refer to Chapter 7, “Technical Specifications”, for Heat Dissipation Data.

DC Current Drains

Refer to Chapter 7, “Technical Specifications”, for DC Current Drain Data.

Notes

The following information pertains to a Complementary Bay installed in a 2200 mm ETSI Seismic Frame.

1. This bay can be installed in a Central Office (overhead cable racking or raised floor applications), CEV, or other customer premises that meet the Central Office or CEV requirements.
2. This bay uses an ETSI Seismic Frame that is 60-cm (23.62-in) wide, 60-cm (23.62-in) deep, and 220-cm (86.61-in) high. See Figure 6-13, “Complementary Bay — 2200 mm ETSI Seismic Frame Dimensions” (6-32).

3. Refer to Table 6-13, “2200 mm ETSI Seismic Frame — Complementary Bay Physical Data” (6-33) and Figure 6-14, “Complementary Bay — 2200 mm ETSI Seismic Frame Lineup” (6-32). This bay only needs front access for normal maintenance activity. Access to the rear of the bay is helpful for infrequent repair activities, such as backplane pin replacement. The 60-cm minimum rear aisle spacing should be used when the bays are located in a 60-cm lineup.
4. See Figure 6-14, “Complementary Bay — 2200 mm ETSI Seismic Frame Lineup” (6-32). This bay and its associated System Bay must be located adjacent to each other without any space between the bays (60-cm on center.) This allows the use of standard bay fiber kits for intrasystem connections.
5. See “Multiple Lineup Arrangement” (6-26)for Bay Placement.
6. On the drop-side of the system, the transmission signals are connected with single mode fibers to the OTUs. On the line-side of the system, the transmission signals are connected with single mode fiber to the LDS equipment. Although the fiber cable jumpers between the drop-side and line-side equipment are available in custom-ordered lengths up to 3300-feet (1000-meters), it is recommended that the WaveStar® OLS 1.6T equipment be located close to its drop-side and line-side equipment to minimize the lengths of the fiber jumpers needed, thereby allowing the use of standard lengths.
7. For a standard Central-Office-Type line-up installation, the overhead cable racking must not block the forced-air cooling flow leaving the top of the cabinet. For color coordination, line-up cable rack covers painted Central Office Soft Blue are recommended.
8. A and B power feeders are required to be connected to the bay. Both feeders should be fed from a different bus load at the BDFB (or equivalent.) Refer to Chapter 7, “Technical Specifications”, to size feeders and fuses.

9. The current drains indicated in Chapter 7, “Technical Specifications”, assume -48 Volt operation. If -60 Volt operation is used, current drains should be reduced accordingly assuming constant power operation.
10. Because the lightwave terminal bays dissipate more than 60-Watts per square foot of allotted area, consult the Lucent Practice 760-130-xxx Series for additional cooling information.

□

Growth Bay

Overview

This section provides information about the Growth Bay of a WaveStar® OLS 1.6T installed on a 2200 mm ETSI Seismic Frame.

Frame Dimensions

See Figure 6-15, "Growth Bay — 2200 mm ETSI Seismic Frame Dimensions" (6-36) for the dimensions of a 2200 mm ETSI Seismic Frame Growth Bay.

Figure 6-15 Growth Bay — 2200 mm ETSI Seismic Frame Dimensions

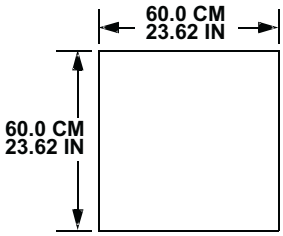

Physical Data

Refer to Table 6-15, "2200 mm ETSI Seismic Frame — Growth Bay Physical Data" (6-36) for 2200 mm ETSI Seismic Frame Growth Bay physical data.

Table 6-15 2200 mm ETSI Seismic Frame — Growth Bay Physical Data

Parameter	Value
ETSI Compatible	Yes
Height	220.0 cm (86.61 in)
Depth	60.0 cm (23.62 in)
Actual Width	59.85 cm (23.56 in)
Effective Width	60.0 cm (23.62 in)
Weight	225 kg (496.0 lbm)
Framework Type	2200 mm ETSI SEIS CAB
Minimum Front Aisle	76.0 cm (29.92 in)
Minimum Rear Aisle	60.0 cm (23.62 in)

Cabling Data

Refer to Table 6-16, "2200 mm ETSI Seismic Frame — Growth Bay Cabling Data" (6-37), for relevant Cabling Data.

Table 6-16 2200 mm ETSI Seismic Frame — Growth Bay Cabling Data

Shield or Class	Effective Cable Area
3	19.00 sq cm (2.95 sq in)
4	9.50 sq cm (1.47 sq in)

Heat Dissipation

Refer to Chapter 7, "Technical Specifications", for Heat Dissipation Data.

DC Current Drains

Refer to Chapter 7, "Technical Specifications", for DC Current Drain Data.

Notes

The following information pertains to a Growth Bay installed in a 2200 mm ETSI Seismic Frame.

1. This bay can be installed in a Central Office (overhead cable racking or raised floor applications), CEV, or other customer premises that meet Central Office or CEV requirements.
2. This bay uses an ETSI Seismic Frame that is 60-cm (23.62-in) wide, 60-cm (23.62-in) deep, and 220-cm (86.61-in) high. See Figure 6-15, "Growth Bay — 2200 mm ETSI Seismic Frame Dimensions" (6-36).
3. Refer to Table 6-15, "2200 mm ETSI Seismic Frame — Growth Bay Physical Data" (6-36) and Figure 6-16, "2-Fiber Repeater — Unmounted Miscellaneously Mounted Shelf" (6-40). This bay only needs front access for normal maintenance activity. Access to the rear of the bay is helpful for infrequent repair activities, such as backplane pin replacement. The 60-cm minimum rear aisle spacing should be used when the bays are located in a 60-cm lineup.
4. On the drop-side of the system, the transmission signals are connected with single mode fibers to the OTUs. On the line-side of the system, the transmission signals are connected with single mode fiber to the LDS equipment. Although the fiber cable jumpers between the drop-side and line-side equipment are available in custom-ordered lengths up to 3300-feet (1000-meters), it is recommended that the OLS 1.6T equipment be located close to its drop-side and line-side equipment to minimize the lengths of the fiber jumpers needed, thereby allowing the use of standard lengths.

5. For a standard Central-Office-type line-up installation, the overhead cable racking must not block the forced-air cooling flow leaving the top of the cabinet. For color coordination, line-up cable rack covers painted Central Office Soft Blue are recommended.
6. A2, B2, A1, and B1 power feeders are required to be connected to the bay. The A2 and A1 feeder set should be fed from a different bus load at the BDFB (or equivalent) than the B2 and B1 feeder set. Refer to Chapter 7, "Technical Specifications", to size feeders and fuses.
7. The current drains indicated in Chapter 7, "Technical Specifications", assume -48 Volt operation. If -60 Volt operation is used, current drains should be reduced accordingly assuming constant power operation.
8. Because the lightwave terminal bays dissipate more than 60-Watts per square foot of allotted area, consult the Lucent Practice 760-130-xxx Series for additional cooling information.

□

Floor Plan Data —Miscellaneously Mounted Shelves

Overview

Purpose The purpose of this section is to provide information on 2-Fiber Repeaters.

□

2-Fiber Repeater

Overview

This section provides information about the 2-Fiber Repeater of a WaveStar® OLS 1.6T installed in a Miscellaneously Mounted Shelf. See Figure 6-16, "2-Fiber Repeater — Unmounted Miscellaneously Mounted Shelf" (6-40) for the Frame Lineup.

Framework Dimensions

See Figure 6-16, "2-Fiber Repeater — Unmounted Miscellaneously Mounted Shelf" (6-40), for the dimensions of an unmounted 2-Fiber Repeater in a Miscellaneously Mounted Shelf.

Figure 6-16 2-Fiber Repeater — Unmounted Miscellaneously Mounted Shelf

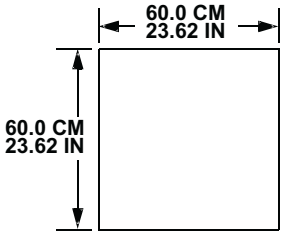

Physical Data

Refer to Table 6-17, "Miscellaneously Mounted 2-Fiber Repeater Shelf Physical Data" (6-40), for Miscellaneously Mounted 2-Fiber Repeater Shelf physical data.

Table 6-17 Miscellaneously Mounted 2-Fiber Repeater Shelf Physical Data

Parameter	Value
NEBS/ETSI Compatible	Yes
Height	80.0 cm (31.5 in)
Depth	35.56 cm (14.00 in)
Actual Width	65.88 cm (25.94 in)
Effective Width	66.04 cm (26.0 in)
Weight	100 lbs
Framework Type	MISC MOUNT
Minimum Front Aisle	76.0 cm (30.00 in)
Minimum Rear Aisle	10.0 cm (4.0 in)

Cabling Data

Refer to Table 6-18, "2-Fiber Miscellaneously Mounted Repeater Shelf Cabling Data" (6-41), for relevant Cabling Data.

Table 6-18 2-Fiber Miscellaneously Mounted Repeater Shelf Cabling Data

Shield or Class	Effective Cable Area (sq. in)
3	2.0
4	1.0

Heat Dissipation

Refer to Chapter 7, "Technical Specifications", for Shelf Heat Dissipation Data.

DC Current Drains

Refer to Chapter 7, "Technical Specifications", for DC Current Drain Data.

Notes

The following information pertains to a 2-Fiber Repeater installed on a Miscellaneously Mounted Shelf.

1. This shelf can be installed in a Central Office (overhead cable racking or raised floor applications), CEV, or other customer premises that meet Central Office or CEV requirements.
2. This shelf can be mounted on any NEBS Standard bay framework (such as ED8C800-50, G1, or ED8C801-50, G1) with either a 6-inch (15.24-cm), 5-inch (12.70-cm,) or 2-inch (5.08-cm) front guard rail. In this situation, the shelf has a 14-inch 35056-cm) deep footprint. It can also mount in a Standard ETSI 60-cm (23.62-inch) deep frame with a mounting surface 4-cm (1.57-inch) or 19.0-cm (7.5-inch) from the front of the cabinet. See Figure 6-16, "2-Fiber Repeater — Unmounted Miscellaneously Mounted Shelf" (6-40).
3. Refer to Table 6-17, "Miscellaneously Mounted 2-Fiber Repeater Shelf Physical Data" (6-40) and Figure 6-16, "2-Fiber Repeater — Unmounted Miscellaneously Mounted Shelf" (6-40). This bay only needs front access for normal maintenance activity. Access to the rear of the shelf is helpful for infrequent repair activities, such as backplane pin replacement. The 4-inch minimum rear aisle spacing should be used in a non-Central Office application where space is very limited. Otherwise, a 22-inch or 24-inch rear aisle spacing is recommended.

4. On both line-sides of the lightwave repeater shelf, the transmission signals are connected with single mode fiber to the LDS equipment. Although the fiber cable jumpers between the line-side equipment are available in custom-ordered lengths up to 3300-feet (1000-meters), it is recommended that the OLS 1.6T equipment be located close to the LDS equipment to minimize the lengths of the fiber jumpers needed, thereby allowing the use of standard lengths.
5. For a standard Central-Office-Type line-up installation, the overhead cable racking must conform to the NEBS Cable Pathways Plan per GR-63-CORE for proper cooling reasons. The overhead cable racking systems either comply, or can be engineered to comply, with this standard. For color coordination, line-up cable rack covers painted Central Office Soft Blue are recommended.
6. A and B power feeders are required to be connected to the shelf. Both feeders should be fed from a different bus load at the BDFB (or equivalent.) Other equipment can be connected to these same feeders as long as they are properly sized for all equipment connected.

□

7 Technical Specifications

Overview

Purpose This chapter contains the technical specifications for the WaveStar® OLS 1.6T.

Contents

General System Specifications	7-3
Physical Dimensions and Specifications	7-6
Environmental Specifications	7-8
Handling and Transportation Specifications	7-9
Reliability Specifications	7-10
Infant Mortality and Design Life	7-15
C-Band OA Output Power Specifications	7-16
L-Band OA Output Power Specifications	7-20
System Current Drain Definitions	7-24
System Power Dissipation Definitions	7-25
Sizing Feeders and Fuses for Bays/Shelves	7-27
2-Fiber End Terminal (80 Channels of OC-192/STM-64) Power Specifications	7-29
2-Fiber Ring Terminal (80 Channels of OC-192/STM-64) Power Specifications	7-31

2-Fiber WAD Terminal Type 2 (OC-192/ STM-64) Power Specifications	7-34
2-Fiber Repeater Power Specifications	7-36
Circuit Pack Technical Specifications	7-37
Circuit Pack Output Wavelengths	7-52
C-Band DCM Values	7-63
L-Band DCM Values	7-64

General System Specifications

Optical Connector Interfaces

The WaveStar® OLS 1.6T uses LC connectors for internal connections and LC or Universal (SC) connectors for external connections.

Transmission Medium

The WaveStar® OLS 1.6T is designed to operate with the following types of transmission media (Telecordia GR-253-CORE and ITU-G.691):

- Standard Single-Mode Fiber (SSMF)
- TeraLight™ Fiber
- TrueWave RS
- TrueWave Classic
- TrueWave Plus
- E-LEAF
- Corning LS
- Corning LEAF

Optical Safety (FDA/CDRH Class I and IEC-60825-1 Class 1 Classification)

The WaveStar® OLS 1.6T is classified as an FDA/CDRH Class I and an IEC-60825-1 Class 1 laser product and assessed as an IEC-60825-2 Hazard Level 1M system as referenced in the Interpretation Sheet 76/224/ISH to IEC-60825-1, Amendment 2, January 2001, for use in IEC-60825-2.

BER Performance

The Bit Error Rate (BER) for a single reach (OTU to OTU) is less than 10^{-16} for the life of the product.

Operating Wavelength

The WaveStar® OLS 1.6T operates at wavelengths between 1530.725 nm (195.850 THz) and 1562.233 nm (191.90 THz).

Optical Reflections Tolerance

The Optical Amplifier ports within the WaveStar® OLS 1.6T can tolerate up to -22 dB of reflectance.

Low Voltage Cut-off

The low-voltage cut-off for the WaveStar® OLS 1.6T is

$-38.5\ V_{DC} \pm 1\ V_{DC}$.

Optical Line Rate

The WaveStar® OLS 1.6T supports a maximum optical line rate of up to:

- 800 Gb/sec for OC-192/STM-64 data channels (C-Band or L-Band)
- 200 Gb/sec for OC-48/STM-16 data channels (C-Band or L-Band)

Optical Amplifier Output Power

The maximum output power of the WaveStar® OLS 1.6T Optical Amplifier is +23 dBm.

Capacity

The WaveStar® OLS 1.6T is capable of carrying over a single fiber on the C- and L-Bands:

- Up to 80 wavelengths in each band of OC-192/STM-64, OC-48/STM-16, or High-Speed Broadband (HSBB)
- Up to 80 wavelengths in each band of a combination of OC-192/STM-64, OC-48/STM-16, or High-Speed Broadband (HSBB).

Transmission Standards Compliance

The WaveStar® OLS 1.6T meets single-mode interoffice digital fiber optic systems requirements and objectives as specified in TR 253 and TR 499.

Cable Access

The WaveStar® OLS 1.6T uses connectorized cabling that utilizes commercially available connectors. All customer access is front-oriented.

Power Specifications

This section provides power specifications for the WaveStar® OLS 1.6T.

Refer to Table 7-1, "WaveStar® OLS 1.6T Power Specifications" (7-4) for relevant power specifications.

Table 7-1 WaveStar® OLS 1.6T Power Specifications

Description	Specification
Voltage Range, nominal	-42 V_{DC} to -60 VDC[1]
Power Feeders (Applies to all Bays except Growth Bay)	Two -48 V_{DC} power feeders (″A″ and ″B″) required
Power Feeders (Growth Bay Only)	Two Dual -48 V_{DC} power feeders (″A1″, ″B1″, ″A2″, and ″B2″) required

Table 7-1 WaveStar® OLS 1.6T Power Specifications (continued)

Description	Specification
Circuit Breaker Rating (per feed)	25 Amp

1. For CE mark compliance, the -60V source must be a SELV (Safety Extra Low Voltage) source. The product is designed to operate over ETSI 300 132-2 operational limits.

Physical Dimensions and Specifications

Bay Dimensions

Refer to Table 7-2, "WaveStar® OLS 1.6T Physical Dimensions" (7-6), for the dimensions of each WaveStar® OLS 1.6T Bay.

Table 7-2 WaveStar® OLS 1.6T Physical Dimensions

Bay Framework	Equipment	Height	Width	Depth
Lucent Seismic	Bay	213.36 cm (84.0 in)	65.88 cm (25.938 in)	35.56 cm (14.0 in)
ETSI Seismic Repeater Shelf	Bay	220.0 cm (86.61 in)	60.0 cm (23.62 in)	60.0 cm (23.62 in)
	Shelf	80.01 cm (31.5 in)	65.88 cm (25.938 in)	35.56 cm (14.0 in)

Circuit Pack Dimensions

Refer to Table 7-3, "WaveStar® OLS 1.6T Circuit Pack Dimensions" (7-6), for the dimensions of each WaveStar® OLS 1.6T Circuit Pack.

Table 7-3 WaveStar® OLS 1.6T Circuit Pack Dimensions

Circuit Pack	Height	Width	Depth
OTU1/OTU1L	13.23 in (336 mm)	1.54 in (39.0 mm)	11.39 in (289.25 mm)
OTUD1	13.23 in (336 mm)	1.54 in (39.0 mm)	11.39 in (289.25 mm)
OTU2	13.23 in (336 mm)	1.54 in (39.0 mm)	11.39 in (289.25 mm)
OTU30/OTU30L	13.23 in (336 mm)	1.54 in (39.0 mm)	11.39 in (289.25 mm)
OTUD30	13.23 in (336 mm)	1.54 in (39.0 mm)	11.39 in (289.25 mm)
OTU31/OTU31L	13.23 in (336 mm)	1.54 in (39.0 mm)	11.39 in (289.25 mm)
OTU40/OTU40L	13.23 in (336 mm)	1.54 in (39.0 mm)	11.39 in (289.25 mm)
OTUD40	13.23 in (336 mm)	1.54 in (39.0 mm)	11.39 in (289.25 mm)
OTU70	13.23(336 mm)	1.54(39.0 mm)	11.39 in (289.25 mm)
OMON1/OMON1L	13.23 in (336 mm)	1.54 in (39.0 mm)	11.39 in (289.25 mm)
OA1/OA1L	13.23 in (336 mm)	4.69 in (119.0 mm)	11.39 in (289.25 mm)
OMU1/OMU2	13.23 in (336 mm)	3.11 in (79.0 mm)	11.39 in (289.25 mm)
ODU1C/ODU2C	13.23 in (336 mm)	3.11 in (79.0 mm)	11.39 in (289.25 mm)
ODU21/ODU22	13.23 in (336 mm)	3.11 in (79.0 mm)	11.39 in (289.25 mm)
WAD5-6	13.23 in (336 mm)	3.11 in (79.0 mm)	11.39 in (289.25 mm)
SUPVY1B	13.23 in (336 mm)	1.54 in (39.0 mm)	11.39 in (289.25 mm)

Table 7-3 WaveStar® OLS 1.6T Circuit Pack Dimensions (continued)

Circuit Pack	Height	Width	Depth
SUPVY3	13.23 in (336 mm)	1.54 in (39.0 mm)	11.39 in (289.25 mm)
BOS2	13.23 in (336 mm)	3.11 in (79.0 mm)	11.39 in (289.25 mm)
EI	13.23 in (336 mm)	1.28 in (39.0 mm)	11.39 in (289.25 mm)
CLSC-S	13.23 in (336 mm)	1.54 in (39.0 mm)	11.39 in (289.25 mm)
CLSC-D	13.23 in (336 mm)	1.54 in (39.0 mm)	11.39 in (289.25 mm)
ORS	13.23 in (336 mm)	3.11 in (79.0 mm)	11.39 in (289.25 mm)

Floor Loading Specifications

Refer to Table 7-4, “WaveStar® OLS 1.6T Floor Loading Specifications” (7-7), for WaveStar® OLS 1.6T floor loading specifications.

Table 7-4 WaveStar® OLS 1.6T Floor Loading Specifications

Framework	Seismic Bay Framework		ETSI Seismic Framework	
	Weight (lbs)	Weight/ft^2	Weight (kg)	Weight/m^2
System Bay	450	65	265	190
Complementary Bay	450	65	265	190
Growth Bay	450	65	265	190
Repeater Shelf	100	15	45	38

Environmental Specifications

Operating Conditions

Refer to Table 7-5, "WaveStar® OLS 1.6T Environmental Operating Conditions" (7-8), for the normal environmental conditions under which the WaveStar® OLS 1.6T is designed to operate:

Table 7-5 WaveStar® OLS 1.6T Environmental Operating Conditions

Operating Parameter	Specification
Normal Operating Temperature Range	+5 °C to +40 °C (+41 °F to +104 °F)
Short-term[1] Operating Temperature Range	-5 °C to +50°C (+23°F to +122°F)
Normal Operating Humidity (non-condensing)	5% to 85%
Short-term Operating Humidity	5% to 90%
Maximum Rate of Temperature Change	1°C/min (1.8 °F/min)

Notes:

1. Short-term refers to a period of up to 96 consecutive hours, up to a total of 15 days in one year.

Standards Compliance

Earthquake and vibration, fire resistance, and airborne contaminant requirements meet the standards of GR-63-CORE Issue 1 (October 1995).

Electrostatic, electromagnetic, electrical grounding, and safety requirements meet standards of GR-1089-CORE Issue 1 (November, 1994).

The WaveStar® OLS 1.6T meets the electromagnetic compatibility requirements (EMC) of GR-1089-CORE.

The WaveStar® OLS 1.6T is *UL*® listed, *CSA*® certified, and CE marked.

Handling and Transportation Specifications

Handling and Transportation

Refer to Table 7-6, "WaveStar® OLS 1.6T Handling and Transportation Conditions" (7-9), for the handling and transportation conditions that apply to the WaveStar® OLS 1.6T:

Table 7-6 WaveStar® OLS 1.6T Handling and Transportation Conditions

Operating Parameter	Specification
Vibration and Shock	Compliant with GR-63-CORE Issue 1 (October 1995)
Temperature (Storage)	-40 °C to +70 °C (-40 °F to +158 °F)
Relative Humidity (Storage)	5% to 95%
Storage/Transportation Altitude	–200 ft to 40 000 ft (–61 m to 12 133 m)

Reliability Specifications

Circuit Pack Failure Rates

Circuit Pack Failure rates are based on the Lucent Technologies' Reliability Information Notebook, 7th Edition, August 1995. Refer to Table 7-7, "WaveStar® OLS 1.6T Circuit Pack FIT Rates" (7-10), for Circuit Pack Failure rates.

Table 7-7 WaveStar® OLS 1.6T Circuit Pack FIT Rates

Description	FIT	Mean Time Between Failures (months)
OMU1/OMU1L, OMU2/OMU2L	1000	1389
ODU1C/ODU2C, ODU21/ODU22	1500	926
OA1, OA1L, OA3L	6000	231
EI1	500	2778
BOS2	2000	694
OMON1/OMON1L	1500	926
SUPVY1B/SUPV1L	1500	926
SUPVY3	1500	926
WAD5	1500	926
WAD6	1500	926
OTU1	3000	463
OTUD1	2500	556
OTU2/OTU2L	3000	463
OTU30/OTU30L	5500	253
OTUD30	4500	309
OTU31/OTU31L	5500	253
OTU40/OTU40L	3000	463
OTUD40	2500	556
OTU70	8000	174
Fan	500	2778
Shelf DC input power filter unit (2 per shelf)	200	6944
DCM	20	69444
CLSC-S	100	13,889

Table 7-7 WaveStar® OLS 1.6T Circuit Pack FIT Rates (continued)

Description	FIT	Mean Time Between Failures (months)
CLSC-D	200	6944
ORS	4500	309

Hardware Unavailability

Hardware unavailability is based on the RIN7 failure rates listed in Table 7-7, "WaveStar® OLS 1.6T Circuit Pack FIT Rates" (7-10) and a Mean-Time-To-Repair (MTTR) of 2 hours.

Refer to Table 7-8, "WaveStar® OLS 1.6T 2-Fiber System Channel Unavailability (Without ORS)" (7-11) without ORS.

Table 7-8 WaveStar® OLS 1.6T 2-Fiber System Channel Unavailability (Without ORS)

Description		OC-48/STM-16 Channel Value (minutes/year/ channel)	OC-192/STM-64 Channel Value (minutes/year/channel)
2-Fiber End and Ring Terminal[1]	Add/Drop Channels	14.9	17.3
	Through Channels	29.7	34.5
2-Fiber Repeater	—	10.4	10.4
2-Fiber Wavelength Add/Drop Type 2	Add/Drop Channels	14.6	17.0
	Through Channels	21.3	21.3

Notes:

1. Note that the values in this table are for the isolated network element listed in the description. For the End Terminal, the add/drop channels assume one End Terminal and the through channels assume two End Terminals back-to-back.

Refer to Table 7-8, "WaveStar® OLS 1.6T 2-Fiber System Channel Unavailability (Without ORS)" (7-11) for Ring Topologies.

Table 7-9 WaveStar® OLS 1.6T 2-Fiber System Channel Unavailability (Ring Topology)

Description		OC-48 Channel Value (min/yr/ channel)	OC-192 Channel Value (min/yr/channel)
2-Fiber End and Ring Terminal[1]	Add/Drop Channels	2.4479	2.4486
	Through Channels	0.0067	0.0080

Table 7-9 WaveStar® OLS 1.6T 2-Fiber System Channel Unavailability (Ring Topology) (continued)

Description		OC-48 Channel Value (min/yr/ channel)	OC-192 Channel Value (min/yr/channel)
2-Fiber Repeater	—	0.0023	0.0024
2-Fiber Wavelength Add/Drop Type 2	Add/Drop Channels	2.4478	2.4486
	Through Channels	0.0048	0.0050

Notes:

1. Assumes two End Terminals back-to-back.

Maximum Control Failure Unavailability

The Maximum Control Failure Unavailability is 1.0 minutes/year/system.

Mean-Time-Between-Maintenance

Table 7-10, “Mean-Time-Between-Maintenance Activity” (7-12), lists the mean-time-between-maintenance activity data for the WaveStar® OLS 1.6T. These values are based on the RIN7 failure rate information from Table 7-7, “WaveStar® OLS 1.6T Circuit Pack FIT Rates” (7-10).

Table 7-10 Mean-Time-Between-Maintenance Activity

Equipment (Full Capacity Loading)		MTBF/months (all OC-48/STM-16 channels)	MTBF/ months (all OC-192/STM-64 channels)
2-Fiber End Terminal (without ORS)	16 Channels	20.42	13.35
	80 Channels	5.54	3.23
	160 Channels	2.77	1.61
2-Fiber End Terminal (with ORS)	16 Channels; 8 Protected	15.78	11.20
	80 Channels; 30 Protected	4.34	2.78
	160 Channels; 60 Protected	2.17	1.39
2-Fiber Ring Terminal (without ORS)	16 Channels	10.81	6.93
	80 Channels	2.81	1.63
	160 Channels	1.41	0.81

Table 7-10 Mean-Time-Between-Maintenance Activity (continued)

Equipment (Full Capacity Loading)		MTBF/months (all OC-48/STM-16 channels)	MTBF/ months (all OC-192/STM-64 channels)
2-Fiber Ring Terminal (with ORS)	16 Channels; 8 Protected	9.48	6.36
	80 Channels; 30 Protected	2.47	1.50
	160 Channels; 60 Protected	1.23	0.75
2-Fiber Ring Terminal, 4-Channel WAD Type 2		23.66	18.11
2-Fiber Repeater		78.47	78.47

Unscheduled Maintenance Events

Important! No scheduled maintenance is required.

Refer to Table 7-11, "Unscheduled Maintenance Events" (7-13), for unscheduled maintenance event reliability data.

Table 7-11 Unscheduled Maintenance Events

Equipment (Full Capacity Loading)		Event/Month (all OC-48 channels)	Event/Month (all OC-192 channels)
2-Fiber End Terminal (without ORS)	16 Channels	0.049	0.075
	80 Channels	0.180	0.310
	160 Channels	0.361	0.620
2-Fiber End Terminal (with ORS)	16 Channels; 8 Protected	0.063	0.089
	80 Channels; 30 Protected	0.230	0.360
	160 Channels; 60 Protected	0.461	0.720
2-Fiber Ring Terminal (without ORS)	16 Channels	0.093	0.144
	80 Channels	0.355	0.615
	160 Channels	0.711	1.229

Table 7-11 Unscheduled Maintenance Events (continued)

Equipment (Full Capacity Loading)		Event/Month (all OC-48 channels)	Event/Month (all OC-192 channels)
2-Fiber Ring Terminal (with ORS)	16 Channels; 8 Protected	0.105	0.157
	80 Channels; 30 Protected	0.406	0.665
	160 Channels; 60 Protected	0.811	1.329
2-Fiber Ring Terminal, 4-Channel WAD Type 2		0.042	0.055
2-Fiber Repeater		0.013	0.013

Infant Mortality and Design Life

Expectancies The WaveStar® OLS 1.6T equipment has an infant mortality factor of 1.3. The equipment design life is 25 years.

□

C-Band OA Output Power Specifications

Introduction

The C-Band Optical Amplifier (OA) total output power depends on the number of equipped input wavelengths and the optical power per channel provisioned in software. The total output power is adjusted automatically by software whenever the number of channels changes.

Power levels shown in Table 7-12, “C-Band OA Output Power for Channel Counts from 1 to 80 Channels” (7-16) correspond to a power setting of +3.5dBm per channel for all C-Band OTU types. For Release 6.2 of the WaveStar® OLS 1.6T, the maximum number of C-Band channels is 80 based on a minimum channel spacing of 50GHz.

C-Band OA Specifications

Refer to Table 7-12, “C-Band OA Output Power for Channel Counts from 1 to 80 Channels” (7-16) for information about OA output power for 80-wavelength systems.

Table 7-12 C-Band OA Output Power for Channel Counts from 1 to 80 Channels

Number of Equipped Wavelengths	Output Power (dBm) for 80-Wavelength System
1	10.0
2	10.0
3	10.0
4	11.0
5	12.0
6	12.3
7	13.0
8	13.0
9	13.0
10	13.5
11	13.9
12	14.3
13	14.6
14	15.0
15	15.3
16	15.5

Table 7-12 C-Band OA Output Power for Channel Counts from 1 to 80 Channels (continued)

Number of Equipped Wavelengths	Output Power (dBm) for 80-Wavelength System
17	15.8
18	16.1.1
19	16.3
20	16.5
21	16.7
22	16.9
23	17.1
24	17.3
25	17.5
26	17.7
27	17.8
28	18.0
29	18.1
30	18.3
31	18.4
32	18.6
33	18.7
34	18.8
35	18.9
36	19.1
37	19.2
38	19.3
39	19.4
40	19.5
41	19.6
42	19.7
43	19.8
44	19.9
45	20.0
46	20.1

Table 7-12 C-Band OA Output Power for Channel Counts from 1 to 80 Channels (continued)

Number of Equipped Wavelengths	Output Power (dBm) for 80-Wavelength System
47	20.2
48	20.3
49	20.4
50	20.5
51	20.6
52	20.7
53	20.7
54	20.8
55	20.9
56	21.0
57	21.1
58	21.1
59	21.2
60	21.3
61	21.4
62	21.4
63	21.5
64	21.6
65	21.6
66	21.7
67	21.8
68	21.8
69	21.9
70	22.0
71	22.0
72	22.1
73	22.1
74	22.2
75	22.3
76	22.3

Table 7-12 C-Band OA Output Power for Channel Counts from 1 to 80 Channels (continued)

Number of Equipped Wavelengths	Output Power (dBm) for 80-Wavelength System
77	22.4
78	22.4
79	22.5
80	22.5

L-Band OA Output Power Specifications

Introduction

The L-Band Optical Amplifier (OA) total output power depends on the number of equipped input wavelengths and the optical power per channel provisioned in software. The total output power is adjusted automatically by software whenever the number of channels changes.

The maximum number of L-Band channels is 80, based on a minimum channel spacing of 50GHz.

L-Band OA Specifications

Refer to Table 7-12, "C-Band OA Output Power for Channel Counts from 1 to 80 Channels" (7-16) for information about C-Band OA output power for 80-wavelength systems. Table 7-13 (below) gives L-Band OA output power specifications.

Table 7-13 L-Band OA Output Power for Channel Counts from 1–80 (All OTU Types)

Number of Equipped Wavelengths	Output Power (dBm) for 80-Wavelength System
1	9.5
2	9.5
3	9.8
4	11.0
5	12.0
6	12.3
7	13.0
8	13.0
9	13.0
10	13.5
11	13.9
12	14.3
13	14.6
14	15.0
15	15.3
16	15.5
17	15.8
18	16.1.1

Table 7-13 L-Band OA Output Power for Channel Counts from 1–80 (All OTU Types) (continued)

Number of Equipped Wavelengths	Output Power (dBm) for 80-Wavelength System
19	16.3
20	16.5
21	16.7
22	16.9
23	17.1
24	17.3
25	17.5
26	17.6
27	17.8
28	18.0
29	18.1
30	18.3
31	18.4
32	18.5
33	18.7
34	18.8
35	18.9
36	19.1
37	19.2
38	19.3
39	19.4
40	19.5
41	19.6
42	19.7
43	19.8
44	19.9
45	20.0
46	20.1
47	20.2
48	20.3

Table 7-13 L-Band OA Output Power for Channel Counts from 1–80 (All OTU Types) (continued)

Number of Equipped Wavelengths	Output Power (dBm) for 80-Wavelength System
49	20.4
50	20.5
51	20.6
52	20.7
53	20.7
54	20.8
55	20.9
56	21.0
57	21.1
58	21.1
59	21.2
60	21.3
61	21.4
62	21.4
63	21.5
64	21.6
65	21.6
66	21.7
67	21.8
68	21.8
69	21.9
70	21.9
71	22.0
72	22.0
73	22.0
74	22.0
75	22.0
76	22.0
77	22.0
78	22.0

Table 7-13 L-Band OA Output Power for Channel Counts from 1–80 (All OTU Types) (continued)

Number of Equipped Wavelengths	Output Power (dBm) for 80-Wavelength System
79	22.0
80	22.0

System Current Drain Definitions

Power Consumption

Refer to the following definitions when determining System Current Drains and sizing power components.

Maximum List 1[a] Use twice this value to size batteries and rectifiers. These values represent the average busy-hour current at normal operating voltages of -48.0 V_{DC}. These values are based on maximum system equipage and circuit pack power dissipations of high temperature and full activity.

Maximum List 2 Use this value to size feeder and fuse. These values represent the peak current under worst case operating conditions. Feeders A2 and B2, and Feeders A1 and B1, are shared feeders, and the values listed here can be realized on any one of the shared feeders. Maximum current drains occur at -37.5 V_{DC}. These values are based on maximum system equipage and circuit pack power dissipations for high temperature and full activity.

Minimum List 1[b] These values represent the average busy-hour current at normal operating voltages of -48.0 V_{DC} for minimum system equipage and circuit pack power dissipations for high temperature and full activity.

Minimum List 2 These values represent the peak current under worst case operating conditions. Feeders A2 and B2, and Feeders A1 and B1, are shared feeders and the values listed here can be realized on any one of the shared feeders. Maximum current drains occur at -37.5 V_{DC}. These values are based on minimum system equipage and circuit pack power dissipations for high temperature and full activity.

[a] The current in each feeder is twice this value.

[b] The current in each feeder is twice this value.

□

System Power Dissipation Definitions

Power Consumption

Refer to the following definitions when determining power dissipation.

Maximum Busy These values are based on maximum system equipage and circuit pack power dissipations for high temperature and full activity.

Maximum Idle These values are based on maximum system equipage and circuit pack power dissipations for normal operating temperature and average activity.

Minimum Busy These values are based on minimum system equipage and circuit pack power dissipations for high temperature and full activity.

Minimum Idle These values are based on minimum system equipage and circuit pack power dissipations for normal operating temperature and average activity.

Planning Use these values for planning building cooling/heating systems. These values are calculated by taking the average of the four (4) items described above.

Bay (Cabinet) Layout for Calculating System Power Density

The following figure is used to determine the footprint area used for calculating the system power density.

Figure 7-1 Bay (Cabinet) Layout for Calculating System Power Density

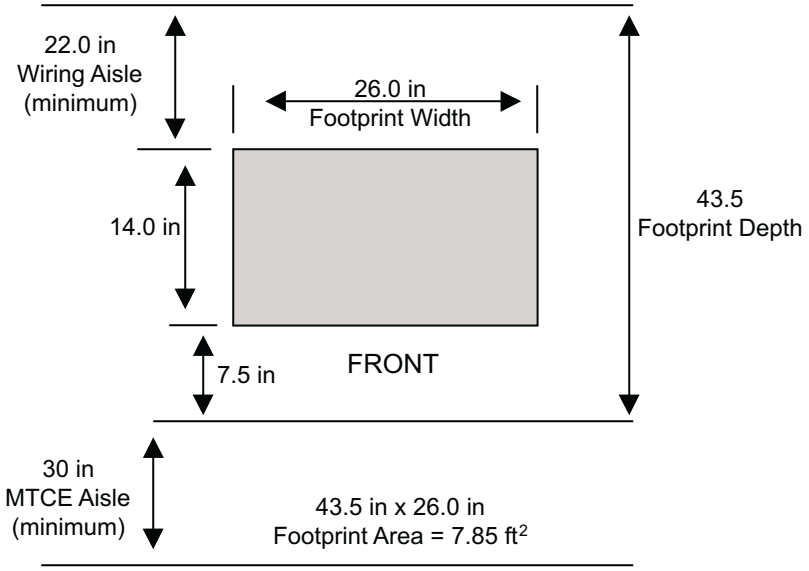

Sizing Feeders and Fuses for Bays/Shelves

Overview

Use the following guidelines to determine the feeder and fuse sizes for each bay. It is recommended to use the maximum feeder and fuse sizes for all bays in order to simplify the engineering.

Guidelines

The ***Max List2*** current drain for each bay feeder is provided in the following Current Consumption tables for a minimum voltage condition of -37.5 V_{DC}. This voltage condition represents the minimum voltage condition corresponding to maximum current conditions for feeders and fuses. Use the ***Max List2*** current drains provided to determine the feeder and fuse sizes per the following guidelines. If another value for minimum voltage condition is preferred that corresponds to reduced feeder and fuse maximum current conditions; then use the following equation to obtain the modified ***Max List2*** current drain for each bay. Note that V_{min} is always greater than 37.5 V_{DC}.

Equation for Modified Max List2 Current Drain

Max List2 (for minimum voltage V_{min}) = [Max List2 (for -37.5 V_{DC})] X [37.5/V_{min}]

Feeder and Fuse/Circuit Breaker Size

To size the feeders and BDFB fuse/circuit breakers, refer to the applicable electric codes, using the current drains in Tables 7-15 through 7-24. Typically, in the US, the UL-rated currents are used to size the feeders and fuses/current breakers. Table 7-14 lists the National Electric Code and UL-rated currents.

Refer to Table 7-14, “2-Fiber End Terminal (80 Channel OC-192/STM-64) Power Dissipation” (7-27), for the power dissipation of a 2-Fiber End Terminal carrying 80 channels of OC-192/STM-64.

Table 7-14 2-Fiber End Terminal (80 Channel OC-192/STM-64) Power Dissipation

Bay/Shelf	UL-Rated Current
System	**45 Amps**
Growth	45 Amps
Complementary	45 Amps
Repeater	5 Amps[1]

Notes:

1. The Repeater Shelf utilizes redundant power filters with an internal 7.5 amp circuit breaker. In order for the fuse/circuit breaker to be larger at the power source than at the load, the fuse/breaker at the BDFB (power source) should be larger than 7.5 amps.

□

2-Fiber End Terminal (80 Channels of OC-192/STM-64) Power Specifications

Power Consumption

Since the 1.6T system is comprised of two 800G systems (80 channels of OC-192/STM-64), the tables that follow are applicable to the C-Band or L-Band subsystems.

Refer to Table 7-15, "2-Fiber End Terminal (80 Channel OC-192/STM-64) Current Consumption" (7-29), for the current consumption of a 2-Fiber End Terminal carrying 80 channels of OC-192/STM-64.

The maximum system equipage is determined by populating all of the shelf slots shown in ″Bay Configurations″ (6-1). The minimum system equipage is comprised of the following number of channels:

- System Bay: Four (4) channels (2 OTU30s and 2 OTUD30s)
- Growth Bays: Two (2) channels (1 OTU30 and 1 OTUD)

Table 7-15 2-Fiber End Terminal (80 Channel OC-192/STM-64) Current Consumption

Bay		Feeder	Feeder Current Consumption (Amps)			
#	Type		Max List 1[1]	Max List 2	Min List 1[1]	Min List 2
1	System	A2 and B2	12.4	31.9	6.2	15.9
2	Growth (Bay 1)	A2 and B2	17.1	43.7	1.9	4.7
2	Growth (Bay 1)	A1 and B1	9.4	24.1	0.6	1.7
3	Growth (Bay 2)	A2 and B2	17.1	43.7	1.9	4.7
3	Growth (Bay 2)	A1 and B1	9.4	24.1	0.6	1.7

Notes:

1. [1] Current in each feeder is twice this value.

Power Dissipation

Refer to Table 7-14, "2-Fiber End Terminal (80 Channel OC-192/STM-64) Power Dissipation" (7-27), for the power dissipation of a 2-Fiber End Terminal carrying 80 channels of OC-192/STM-64.

Table 7-16 2-Fiber End Terminal (80 Channel OC-192/STM-64) Power Dissipation

Bay		Power Dissipation (Watts)				
#	Type	Max Busy	Max Idle	Min Busy	Min Idle	Planning
1	System	1195	1078	597	505	844
2	Growth	2542	2372	240	208	1341
3	Growth	2542	2372	240	208	1341

System Power Density

The average power density for a 2-Fiber End Terminal carrying 80 channels of OC-192/STM-64 is as follows (based on a maximum power/Bay Level Foot Print area of 7.85 square feet):

Table 7-17 2-Fiber End Terminal (80 Channel OC-192/STM-64) System Power Density

Bay		Power Dissipation (Watts)	Bay Level Power Density	Average System Level Power Density
#	Type	Watts	Watts/Sq. Ft.	Watts/Sq. Ft.
1	System	1195.00	152.23	266.62
2	Growth	2542.00	323.82	
3	Growth	2542.00	323.82	

2-Fiber Ring Terminal (80 Channels of OC-192/STM-64) Power Specifications

Power Consumption

Since the 1.6T system is comprised of two 800G systems (80 channels of OC-192/STM-64), the tables below are applicable to the C-Band or L-Band subsystems.

Refer to Table 7-17, ″2-Fiber Ring Terminal (80 Channels OC-192/STM-64) Current Consumption″, for the current consumption of a 2-Fiber Ring Terminal carrying 80 channels of OC-192/STM-64.

The maximum system equipage is determined by populating all of the shelf slots shown in Chapter 6, ″Bay Configurations″ (6-1). The minimum system equipage is comprised of the following number of channels:

- System Bay: 4 channels (2 OTU30s and 2 OTUD30s)
- Complementary Bay: 4 channels (2 OTU30s and 2 OTUD30s)
- Growth Bays: 2 channels (1 OTU30 and 1 OTUD30)

Table 7-18 2-Fiber Ring Terminal (80 Channels OC-192/STM-64) Current Consumption

Bay		Feeder	Feeder Current Consumption (Amps)			
#	Type		Max List 1[1]	Max List 2	Min List 1[1]	Min List 2
1	System	A2 and B2	12.3	31.4	6.2	15.9
2	Complementary	A2 and B2	11.4	29.2	5.4	13.8
3	Growth (# 1)	A2 and B2	17.1	43.8	1.9	4.8
3	Growth (# 1)	A1 and B1	9.4	24.1	0.6	1.7
4	Growth (# 2)	A2 and B2	17.1	43.8	1.9	4.8
4	Growth (# 2)	A1 and B1	9.4	24.1	0.6	1.7
5	Growth (# 3)	A2 and B2	17.1	43.8	1.9	4.8
5	Growth (# 3)	A1 and B1	9.4	24.1	0.6	1.7
6	Growth (# 4)	A2 and B2	17.1	43.8	1.9	4.8

Table 7-18 2-Fiber Ring Terminal (80 Channels OC-192/STM-64) Current Consumption (continued)

Bay		Feeder	Feeder Current Consumption (Amps)			
#	Type		Max List 1[1]	Max List 2	Min List 1[1]	Min List 2
6	Growth (# 4)	A1 and B1	9.4	24.1	0.6	1.7

Notes:

1. [1]Current in each feeder is twice this value.

Power Dissipation

Refer to Table 7-19, "2-Fiber Ring Terminal (80 Channels OC-192/STM-64) Power Dissipation" (7-33), for the power dissipation of a 2-Fiber Ring Terminal carrying 80 channels of OC-192/STM-64.

Table 7-19 2-Fiber Ring Terminal (80 Channels OC-192/STM-64) Power Dissipation

Bay		Power Dissipation (Watts)				
#	Type	Max Busy	Max Idle	Min Busy	Min Idle	Planning
1	System	1176	1071	597	512	839
2	Complementary	1095	1018	516	459	772
3	Growth (# 1)	2542	2372	240	208	1341
4	Growth (# 2)	2542	2372	240	208	1341
5	Growth (#3)	2542	2372	240	208	1341
6	Growth (# 4)	2542	2372	240	208	1341

System Power Density

The average power density for a 2-Fiber Ring Terminal carrying 80 channels of OC-192/STM-64 is as follows (based on a maximum power/Bay Level footprint area of 7.85 ft^2):

Table 7-20 2-Fiber Ring Terminal (80 Channels OC-192/STM-64) System Power Density

Bay		Power Dissipation (Watts)	Bay Level Power Density	Average System Level Power Density
#	Type	Watts	Watts/Sq. Ft.	Watts/ft
1	System	1176	149.81	264.10
2	Complementary	1095	139.49	
3	Growth (# 1)	2542	323.82	
4	Growth (# 2)	2542	323.82	
5	Growth (# 3)	2542	323.82	
6	Growth (# 4)	2542	323.82	

2-Fiber WAD Terminal Type 2 (OC-192/ STM-64) Power Specifications

Power Consumption

Refer to Table 7-20, ″2-Fiber WAD Terminal Type 2 (OC-192/STM-64) Current Consumption″, for the current consumption specifications for a 2-Fiber WAD Terminal dropping OC-192/STM-64 traffic.

The maximum system equipage is determined by populating all of the shelf slots shown in ″Bay Configurations″ (6-1), Figure 6-4. The minimum system equipage is comprised of the following number of channels:

- System Bay: Four (4) channels (2 OTU30s and 2 OTUD30s)

Table 7-21 2-Fiber WAD Type 2 (OC-192/STM-64) Current Consumption

Bay		Feeder	Feeder Current Consumption (Amps)			
#	Type		Max List 1[1]	Max List 2[1]	Min List 1	Min List 2
1	System	A2 and B2	10.2	26.2	7.3	18.7

Notes:

1. Current in each feeder is twice this value.

Power Dissipation

Refer to Table 7-21, ″2-Fiber WAD Terminal Type 2 (OC-192/STM-64) Power Dissipation″, for the power dissipation specifications for a 2-Fiber WAD Terminal dropping OC-192/STM-64 traffic.

Table 7-22 2-Fiber WAD Type 2 (OC-192/STM-64) Power Dissipation

Bay		Power Dissipation (Watts)				
#	Type	Max Busy	Max Idle	Min Busy	Min Idle	Planning
1	System	981	833	701	569	771

System Power Density

The average power density for a 2-Fiber WAD Terminal Type 2 (OC-192/STM-64) is the following (based on a maximum power/Bay Level footprint area of 7.85 ft^2).

Table 7-23 2-Fiber WAD Terminal Type 2 (OC-192/STM-64) System Power Density

Bay		Power Dissipation (Watts)	Bay Level Power Density	Average System Level Power Density
#	Type	Watts	Watts/Sq. Ft.	Watts/ft
1	System	981	124.97	124.97

2-Fiber Repeater Power Specifications

Power Consumption

Refer to Table 7-24, "2-Fiber Repeater Current Consumption" (7-36), for the current consumption specifications for a 2-Fiber Repeater. Note that the maximum and minimum system equipage is the same.

Table 7-24 2-Fiber Repeater Current Consumption

Bay		Feeder	Feeder Current Consumption (Amps)			
#	Type		Max List 1	Max List 2	Min List 1	Min List 2
1	Repeater	A2 and B2	1.8	4.7	1.8	4.7

Power Dissipation

Refer to Table 7-25, "2-Fiber Repeater Power Dissipation" (7-36), for the power dissipation specifications for a 2-Fiber Repeater.

Table 7-25 2-Fiber Repeater Power Dissipation

Bay		Power Dissipation (Watts)				
#	Type	Max Busy	Max Idle	Min Busy	Min Idle	Planning
1	Repeater	177	127	177	127	152

□

Circuit Pack Technical Specifications

Important! Throughout this section, the following acronyms are used within the tables: BOL (Beginning of Life) and RT (Room Temperature).

OTU1 Refer to Table 7-25, ″OTU1 (2.5 Gb/s Add OTU) Specifications″, for the technical specifications for OTU1. All power measurements use an optical power meter with a tolerance of 0.3 dB maximum.

Table 7-26 OTU1 (2.5 Gb/s Add OTU) C-Band Specifications

Characteristic	Expected Value/Range
Optical Input Power Range	-18 dBm to -3 dBm at 10^{-16} BER
Back-to-back receiver sensitivity (BOL)	-21.8 dBm at 10^{-10} BER
Back-to-back receiver overload	-3.3 dBm at 10^{-10} BER
Output power level (BOL)	-6.2 dBm to -3.6 dBm (at connector output)
Center frequency/output wavelength — up to 80 channels (measured in vacuum)	Frequencies are from 191.90 THz to 195.85 THz in 50 GHz increments. Refer to Table 7-56, “1.6T OTU1 Output Wavelengths” (7-52). All values are 0.02 nm.
Input return loss	≥ 27 dB
Extinction ratio (BOL)	≥ 13 dB

OTU1L Refer to Table 7-26, ″OTU1L (2.5 Gb/s Add OTU) Specifications″, for the technical specifications for OTU1L. All power measurements use an optical power meter with a tolerance of 0.3 dB maximum.

Table 7-27 OTU1L (2.5 Gb/s Add OTU) L-Band Specifications

Characteristic	Expected Value/Range
Optical Input Power Range	-18 dBm to -3 dBm at 10^{-16} BER
Back-to-back receiver sensitivity (BOL)	Minimum -21.7 dBm at 10^{-10} BER
Back-to-back receiver overload	-3.3 dBm at 10^{-10} BER
Output power level (BOL)	-3.6 dBm to -6.2 dBm (at connector output)
Center frequency/output wavelength — up to 80 channels (measured in vacuum)	Frequencies are from 186.50 THz to 190.45 THz in 50 GHz increments. All values are ±0.02 nm.
Input return loss	≥ 27 dB
Extinction ratio (BOL, RT)	≥ 13 dB

OTUD1 Refer to Table 7-27, ″OTUD1 (2.5 Gb/s Drop OTU) Specifications″, for the technical specifications for OTUD1. All power measurements use an optical power meter with a tolerance of 0.3 dB maximum.

Table 7-28 OTUD1 (2.5 Gb/s Drop OTU) Specifications

Characteristic	Expected Value/Range
Optical input power range	10^{-16} BER from -10 to -24dBm
Back-to-back receiver sensitivity (BOL,RT)[1,2]	Minimum -29.7 dBm at 10^{-10} BER
Back-to-back receiver overload[1,2]	Minimum -9.3 dBm at 10^{-10} BER
Output power level (BOL,RT)[1,2]	-1.0dBm to +2.8dBm (ST Connector) -0.8dBm to +2.8dBm (LC Connector)
Center frequency/output wavelength	1280 nm to 1335 nm
Input return loss	≥ 27 dB
Extinction ratio (BOL,RT)	≥ 10 dB

Notes:

1. All power measurements require an optical power meter with a total uncertainty of 0.3 dB.
2. All expected power level values/ranges are specified with a 0 dB LBO installed in the circuit pack port.

OTU2 Refer to Table 7-27, ″OTU2 (2.5 Gb/s Through OTU) Specifications″, for the technical specifications for OTU2. All power measurements use an optical power meter with a tolerance of 0.3 dB maximum.

Table 7-29 OTU2 (2.5 Gb/s Through OTU) C-Band Specifications

Characteristic	Expected Value/Range
Optical input power range	10^{-16} BER from -10 to -24dBm
Back-to-back receiver sensitivity (BOL,RT)[1,2]	Minimum -29.7 dBm at 10^{-10} BER
Back-to-back receiver overload[1,2]	Minimum -9.3 dBm at 10^{-10} BER
Output power level (BOL,RT)[1,2]	-3.6 to -6.2 dBm (at connector output)
Center frequency/output wavelength — up to 80 channels (measured in vacuum)	Frequencies are from 191.90 THz to 195.85 THz in 50 GHz increments. Refer to Table 7-58, “1.6T OTU2 Output Wavelengths” (7-54). All values are 0.02 nm.
Input return loss	≥ 27 dB
Extinction ratio (BOL,RT)	≥ 13 dB

Notes:

1. All power measurements require an optical power meter with a total uncertainty of 0.3 dB.
2. All expected power level values/ranges are specified with a 0 dB LBO installed in the circuit pack port.

OTU2L Refer to Table 7-27, ″OTU2L (2.5 Gb/s Through OTU) Specifications″, for the technical specifications for OTU2L. All power measurements use an optical power meter with a tolerance of 0.3 dB maximum.

Table 7-30 OTU2L (2.5 Gb/s Through OTU) L-Band Specifications

Characteristic	Expected Value/Range
Optical input power range	10^{-16} BER from -10 to -24 dBm
Back-to-back receiver sensitivity (BOL,RT)[1,2]	Minimum -29.7 dBm at 10^{-10} BER
Back-to-back receiver overload[1,2]	Minimum -9.3 dBm at 10^{-10} BER
Output power level (BOL,RT)[1,2]	-3.6 to -6.2 dBm (at connector output)
Center frequency/output wavelength — up to 80 channels (measured in vacuum)	Frequencies are from 186.50 THz to 190.45 THz in 50 GHz increments. All values are ±0.02 nm.
Input return loss	≥ 27 dB
Extinction ratio (BOL,RT)	≥ 13 dB

Notes:

1. All power measurements require an optical power meter with a total uncertainty of 0.3 dB.
2. All expected power level values/ranges are specified with a 0 dB LBO installed in the circuit pack port.

OTU30 Refer to Table 7-30, ″OTU30 (10 Gb/s Add OTU with Strong FEC) Specifications″, for the technical specifications for OTU30. All power measurements use an optical power meter with a tolerance of 0.3 dB maximum.

Table 7-31 OTU30 (10 Gb/s Add OTU with Strong FEC) C-Band Specifications

Characteristic	Expected Value/Range
Optical Input Power Range	-13 dBm to -1 dBm at 10^{-16} BER
Optical Input Power Range	-14 dBm to -1 dBm at 10^{-12}BER
Output power level (BOL,RT)[1,2]	-3.6 to -6.2 dBm (at connector output)

Table 7-31 OTU30 (10 Gb/s Add OTU with Strong FEC) C-Band Specifications (continued)

Characteristic	Expected Value/Range
Center frequency/output wavelength — up to 80 channels (measured in vacuum)	Frequencies are from 191.90 THz to 195.85 THz in 50 GHz increments. All values are 0.02 nm.
Input return loss	≥ 27 dB
Extinction ratio (BOL,RT)	≥ 12 dB

Notes:

1. All power measurements require an optical power meter with a total uncertainty of 0.3 dB.
2. All expected power level values/ranges are specified with a 0 dB LBO installed in the circuit pack port.

OTU30L

Refer to Table 7-31, ″OTU3L (10 Gb/s Add OTU with Strong FEC) Specifications″, for the technical specifications for OTU30L. All power measurements use an optical power meter with a tolerance of 0.3 dB maximum.

Table 7-32 OTU30L (10 Gb/s Add OTU with Strong FEC) L-Band Specifications

Characteristic	Expected Value/Range
Optical Input Power Range	-14 dBm to -31 dBm at 10^{-12} BER
Optical Input Power Range	-13 dBm to -3 dBm at 10^{-16}BER
Output power level (BOL,RT)[1,2]	-3.6 to -6.2 dBm (at connector output)
Center frequency/output wavelength — up to 80 channels (measured in vacuum)	Frequencies are from 186.50 THz to 190.45 THz in 50 GHz increments. All values are ±0.02 nm.
Input return loss	≥ 27 dB
Extinction ratio (BOL,RT)	≥ 12 dB

Notes:

1. All power measurements require an optical power meter with a total uncertainty of 0.3 dB.
2. All expected power level values/ranges are specified with a 0 dB LBO installed in the circuit pack port.

OTUD30 for C-Band

Refer to Table 7-32, ″OTUD30 (10 Gb/s Drop OTU with Strong FEC) Specifications″, for the technical specifications for OTUD30. All power measurements use an optical power meter with a tolerance of 0.3 dB maximum.

Table 7-33 OTUD30 (10 Gb/s Drop OTU with Strong FEC) C-Band Specifications

Characteristic	Expected Value/Range
Input Power Range	-20 dBm to -13 dBm at 10^{-16} BER with APD Receiver (FEC on)
Back-to-back receiver sensitivity (BOL,RT)[1,2]	Minimum -22.7 dBm at 10^{-10} BER (FEC off)
Back-to-back receiver overload[1,2]	Minimum -13.3 dBm at 10^{-10} BER
Output power level (BOL,RT)	-3.3 dBm to -1.7 dBm
Output power level (EOL)	-1 dBm to -5 dBm
Center frequency/output wavelength	1535 nm to 1565 nm
Input return loss	≥ 27 dB
Extinction ratio (BOL,RT)	≥ 8.5 dB
Extinction ratio (EOL)	≥ 8.2 dB

Notes:

1. All power measurements require an optical power meter with a total uncertainty of 0.3 dB.
2. All expected power level values/ranges are specified with a 0 dB LBO installed in the circuit pack port.

OTUD30 for L-Band

Refer to Table 7-33, ″OTUD30 (10 Gb/s Drop OTU with Strong FEC) Specifications″, for the technical specifications for OTUD30 for L-Band operation. All power measurements use an optical power meter with a tolerance of 0.3 dB maximum.

Table 7-34 OTUD30 (10 Gb/s Drop OTU with Strong FEC) L-Band Specifications

Characteristic	Expected Value/Range
Input Power Range	-19.5 dBm to -12.5 dBm at 10^{-16} BER (FEC on)
Back-to-back receiver sensitivity (BOL,RT)[1,2]	Minimum -22.2 dBm at 10^{-10} BER (FEC off)
Back-to-back receiver overload[1,2]	Minimum -12.8 dBm at 10^{-10} BER
Output power level (BOL,RT)	-3.3 dBm to -1.7 dBm
Output power level (EOL)	-5.0 dBm to -1.0 dBm
Center frequency/output wavelength	1535 nm to 1565 nm
Input return loss	≥ 27 dB
Extinction ratio (BOL,RT)	≥ 8.5 dB
Extinction ratio (EOL)	≥ 8.2 dB

Notes:

1. All power measurements require an optical power meter with a total uncertainty of 0.3 dB.
2. All expected power level values/ranges are specified with a 0 dB LBO installed in the circuit pack port.

OTU31 Refer to Table 7-30, ″OTU31 (10 Gb/s Through OTU with Strong FEC) Specifications″, for the technical specifications for OTU31. All power measurements use an optical power meter with a tolerance of 0.3 dB maximum.

Table 7-35 OTU31 (10 Gb/s Through OTU with Strong FEC) C-Band Specifications

Characteristic	Expected Value/Range
Optical Input Power Range	-20 dBm to -13 dBm at 10^{-16} BER
Back-to-back receiver sensitivity (BOL,RT)[1,2]	Minimum -22.7 dBm at 10^{-10} BER
Back-to-back receiver overload[1,2]	Minimum -13.3 dBm at 10^{-10} BER
Output power level (BOL,RT)[1,2]	-3.6 to -6.2 dBm (at connector output)
Center frequency/output wavelength — up to 80 channels (measured in vacuum)	Frequencies are from 191.90 THz to 195.85 THz in 50 GHz increments. All values are 0.02 nm.
Input return loss	≥ 27 dB
Extinction ratio (BOL,RT)	≥ 12 dB

Notes:

1. All power measurements require an optical power meter with a total uncertainty of 0.3 dB.
2. All expected power level values/ranges are specified with a 0 dB LBO installed in the circuit pack port.

OTU31L Refer to Table 7-34, ″OTU31 (10 Gb/s Through OTU with Strong FEC) Specifications″, for the technical specifications for OTU31. All power measurements use an optical power meter with a tolerance of 0.3 dB maximum.

Table 7-36 OTU31 (10 Gb/s Through OTU with Strong FEC) L-Band Specifications

Characteristic	Expected Value/Range
Optical Input Power Range	-19.5 dBm to -12.5 dBm at 10^{-16} BER
Back-to-back receiver sensitivity (BOL,RT)[1,2]	Minimum -22.7 dBm at 10^{-10} BER
Back-to-back receiver overload[1,2]	Minimum -13.3 dBm at 10^{-10} BER

Table 7-36 OTU31 (10 Gb/s Through OTU with Strong FEC) L-Band Specifications (continued)

Characteristic	Expected Value/Range
Output power level (BOL,RT)[1,2]	-3.6 to -6.2 dBm (at connector output)
Center frequency/output wavelength — up to 80 channels (measured in vacuum)	Frequencies are from 186.50 THz to 190.45 THz in 50 GHz increments. All values are ± 0.02 nm.
Input return loss	≥ 27 dB
Extinction ratio (BOL,RT)	≥ 12 dB

Notes:

1. All power measurements require an optical power meter with a total uncertainty of 0.3 dB.
2. All expected power level values/ranges are specified with a 0 dB LBO installed in the circuit pack port.

OTU40 Refer to Table 7-31, ″OTU40 (HSBB Add OTU) Specifications″, for the technical specifications for OTU40. All power measurements use an optical power meter with a tolerance of 0.3 dB maximum.

Table 7-37 OTU40 (HSBB Add OTU) C-Band Specifications

Characteristic	Expected Value/Range
Input Data Rate	100 Mb/s to 2.4 Gb/s
Optical Input Power Range	-18 to -3dBm at 10^{-16} BER
Back-to-back receiver sensitivity (BOL,RT)[1,2]	Minimum -21.7 dBm at 10^{-10} BER
Back-to-back receiver overload[1,2]	Minimum -3.3 dBm at 10^{-10} BER
Output power level (BOL,RT)[1,2]	-3.6 to -6.2 dBm (at connector output)
Center frequency/output wavelength - up to 80 channels (measured in vacuum)	Frequencies are from 191.90 to 195.85THz in 50GHz increments. Refer to Table 9-47, 400G OTU40 Output Wavelengths. All values are ± 0.02nm.
Input return loss	≥ 27 dB
Extinction ratio (BOL,RT)	≥ 13 dB

Notes:

1. All power measurements require an optical power meter with a total uncertainty of 0.3 dB.
2. All expected power level values/ranges are specified with a 0 dB LBO installed in the circuit pack port.

OTU40L Refer to Table 7-37, ″OTU40L (HSBB Add OTU) Specifications″, for the technical specifications for OTU40L. All power measurements use an optical power meter with a tolerance of 0.3 dB maximum.

Table 7-38 OTU40 (HSBB Add OTU) L-Band Specifications

Characteristic	Expected Value/Range
Input Data Rate	100 Mb/s to 2.4 Gb/s
Optical Input Power Range	-18 to -3dBm at 10^{-16} BER
Back-to-back receiver sensitivity (BOL,RT)[1,2]	Minimum -21.7 dBm at 10^{-10} BER
Back-to-back receiver overload[1,2]	Minimum -3.3 dBm at 10^{-10} BER
Output power level (BOL,RT)[1,2]	-3.6 to -6.2 dBm (at connector output)
Center frequency/output wavelength - up to 80 channels (measured in vacuum)	Frequencies are from 186.50 to 190.45THz in 50 GHz increments. All values are ± 0.02nm.
Input return loss	≥ 27 dB
Extinction ratio (BOL,RT)	≥ 13 dB

Notes:

1. All power measurements require an optical power meter with a total uncertainty of 0.3 dB.
2. All expected power level values/ranges are specified with a 0 dB LBO installed in the circuit pack port.

OTUD40 Refer to Table 7-32, ″OTUD40 (HSBB Drop OTU) Specifications″, for the technical specifications for OTUD40. All power measurements use an optical power meter with a tolerance of 0.3 dB maximum.

Table 7-39 OTUD40 (HSBB Drop OTU) Specifications

Characteristic	Expected Value/Range
Input Data Rate	100 Mb/s to 2.5 Gb/s
Optical input power range	-24 dBm to -10 dBm at 10^{-16} BER
Back-to-back receiver sensitivity (BOL)	-29.7 dBm at 10^{-10} BER
Back-to-back receiver overload	-9.3 dBm at 10^{-10} BER
Output power level (BOL)	-0.0 dBm to -5.0 dBm
Center frequency/output wavelength	1280 nm to 1335 nm
Input return loss	≥ 27 dB
Extinction ratio (BOL)	≥ 10 dB

OTU70 (4:1 10G Multiplex)

Refer to Table 7-39, ″OTU70 (2.5 Gb/s Add OTU) Specifications″, for the technical specifications for OTU70. All power measurements use an optical power meter with a tolerance of 0.3 dB maximum.

Table 7-40 OTU70 Specifications

Characteristic	Expected Value/Range
Client OC48 Input Power Range	-4 dBm to -15 dBm at
Range of Client (SR OC-48) operating wavelengths (measured in vacuum)	Wavelengths are from 1266 to 1360 nm
Client OC48 Receiver Sensitivity (BOL, RT)	Minimum -17.7 dBm at 10^{-10}BER
Client OC48 Receiver Overload	Minimum -3.3 dBm at 10^{-10}BER
Receive Path penalty budget	Maximum 1 dB
Path attenuation range	0-7 dBm
Client Sink Output Power Range (BOL, RT)	-10.3 dBm to -2.7 dBm (at connector output)
OC-48 Transmitter Extinction Ratio (BOL, RT)	Minimum 8.2 dB
Range of High Speed Line center frequency/output wavelength - up to 80 channels (measured in vacuum)	Frequencies are from 191.90 THz to 195.85 THz in 50 GHz increments. Refer to Table 7-56, “1.6T OTU1 Output Wavelengths” (7-52).
High Speed Line (Source) Output Power Range (BOL,RT)	-6.2dBm to –3.6dBm (at connector output)
Wavelengths are from 1266 to 1360 nm	-19.7dBm to –13.3dBm

OMU1/OMU2 (C-Band) Specifications

Refer to Table 7-40, ″OMU1/OMU2 Specifications″, for the technical specifications for OMU1/OMU2.

Table 7-41 OMU1/OMU2 Specifications

Characteristic	Expected Value/Range
Insertion Loss (OMU1)	≤ 12.6 dB
Insertion Loss (OMU1 + OMU2)	≤ 12.9 dB
Filter Bandwidth (3 dB)	≥ 0.59 nm

OMU1L/OMU2L (L-Band) Specifications

Refer to Table 7-42, ″OMU1L/OMU2L Specifications″, for the technical specifications for L-Band OMUs.

Table 7-42 OMU1/OMU2 Specifications

Characteristic	Expected Value/Range
Insertion Loss (OMU1)	≤ 11.7 dB
Insertion Loss (OMU1 + OMU2)	≤ 11.7 dB
Filter Bandwidth (3 dB)	≥ 0.53 nm

ODU1C/ODU2C (C-Band) Specifications

Refer to Table 7-35, ″ODU1C/ODU2C Specifications″, for the technical specifications for ODU1C/ODU2C.

Table 7-43 ODU1C/ODU2C Specifications

Characteristic	Expected Value/Range
ODU1C Insertion Loss (IN to OUT50G)	≤ 5.6 dB
ODU1C Insertion Loss (IN to OUT9xyz	≤ 11.8 dB
ODU2C Insertion Loss (IN50G to OUT9xyz))	≤ 6.3 dB
Filter 3 dB Bandwidth (ODU1C and ODU2C)	≥ 0.23 nm

ODU21/ODU22 (L-Band) Specifications

Refer to Table 7-43, ″ODU1C/ODU2C Specifications″, for the technical specifications for ODU1C/ODU2C.

Table 7-44 ODU1C/ODU2C Specifications

Characteristic	Expected Value/Range
ODU1C Insertion Loss (IN to OUT50G)	≤ 5.6 dB
ODU1C Insertion Loss (IN to OUT9xyz	≤ 11.8 dB
ODU2C Insertion Loss (IN50G to OUT9xyz))	≤ 6.3 dB
Filter 3 dB Bandwidth (ODU1C and ODU2C)	≥ 0.23 nm

CLSC (C+L Separator/Combiner) Specifications

Refer to Table 7-44, ″CLSC Specifications″, for the technical specifications for CLSC.

Table 7-45 CLSC Specifications

Characteristic	Expected Value/Range
Separator Insertion Loss - C-band (IN C+L to OUT C port)	≤ 1.6 dB
Separator Insertion Loss - L-Band (IN C+L to OUT L port)	≤ 1.3 dB
Combiner Insertion Loss - C-band (IN C to OUT C+L port)	≤ 1.4 dB

Table 7-45 CLSC Specifications (continued)

Characteristic	Expected Value/Range
Combiner Insertion Loss - L-band (IN L to OUT C+L port)	≤ 1.7 dB

ORS Refer to Table 7-45, ″ORS Specifications″, for the technical specifications for ORS.

Table 7-46 ORS Specifications

Characteristic	Expected Value/Range
Insertion Loss C1In-1AOut	5.6 dB
Insertion Loss C1In-1BOut	6.2 dB
Insertion Loss C2In-2BOut	6.2 dB
Insertion Loss C2In-2AOut	5.6 dB
Insertion Loss 1AIn-C1Out	2.0 dB
Insertion Loss 2AIn-C2Out	2.0 dB
Insertion Loss 2BIn-C2Out	7.0 dB
Insertion Loss 1BIn-C1Out	7.0 dB
Maximum input power:	
C2-IN	3.0 dBm
C1-IN	3.0 dBm
2A-IN	4.3 dBm
1A-IN	4.3 dBm
1B-IN	4.3 dBm
2B-IN	4.3 dBm
Minimum input power:	
C2-IN	–11 dBM
C1-IN	–11 dBm
2A-IN	–11 dBm
1A-IN	–11 dBm
1B-IN	–11 dBm
2B-IN	–11 dBm
ORS Optical Protection Switch Time	<60 ms

OA1 Refer to Table 7-46, ″OA1 Specifications″, for the technical specifications for OA1.

Table 7-47 OA1 Specifications

Characteristic	Expected Value/Range
Input Power Range for 25 dB span loss (composite power)	-15.2 dBm to +2.5 dBm
Input Power Range for 33 dB span loss (composite power)	-23 dBm to +2.5 dBm
Output Power Range (composite power)	+10 dBm to +22.5 dBm +2dBm to 14.5dBm (WAD Receive OA only)
Operating Gain	20 dB to 25 dB
Gain Tilt	Variable
Bandwidth	≥ 32 nm
Remnant Pump Power	< -10 dBm
Power Stability	Software controllable
Line Input Return Loss	≥40 dB
Line Output Return Loss	≥ 40 dB

OA1L Refer to Table 7-47, ″OA1L Specifications″, for the technical specifications for OA1L.

Table 7-48 OA1L L-Band Specifications

Characteristic	Expected Value/Range
Input Power Range for 28 dB span loss (composite power)	-18.5 dBm to -1.0 dBm
Output Power Range (composite power)	+10 dBm to +22.5 dBm
Operating Gain	23 dB to 28 dB
Gain Tilt	Variable
Bandwidth	≥ 35 nm
Remnant Pump Power	< -10 dBm
Noise Figure	6.0 dB @ 28 dB span loss
Power Stability	Software controllable
Line Input Return Loss	≥ 27 dB

OA3L Refer to Table 7-48, ″OA3L Specifications″, for the technical specifications for OA3L.

Table 7-49 OA3L L-Band Specifications

Characteristic	Expected Value/Range
Input Power Range for 28 dB span loss (composite power)	-18.5 dBm to -1.0 dBm
Output Power Range (composite power)	+10 dBm to +22.5 dBm
Operating Gain	23 dB to 28 dB
Gain Tilt	Variable
Bandwidth	≥ 35 nm
Remnant Pump Power	< -10 dBm
Noise Figure	6.0 dB @ 28 dB span loss
Power Stability	Software controllable
Line Input Return Loss	≥ 27 dB

SUPVY1B Refer to Table 7-49, ″SUPVY1B Specifications″, for the technical specifications for SUPVY1B.

Table 7-50 SUPVY1B Specifications

Characteristic	Expected Value/Range
Back-to-back receiver sensitivity (BOL)	-45 dBm at 10^{-10} BER
Back-to-back receiver overload	-5 dBm at 10^{-9} BER
Output power level (BOL)	+1.7 dBm to +5.6 dBm
Center frequency/output wavelength	1510 nm 10 nm
Input return loss	≥ 14 dB
Extinction ratio (BOL)	≥ 10 dB

SUPVY3 Refer to Table 7-50, ″SUPVY3 Specifications″, for the technical specifications for SUPVY3.

Table 7-51 SUPVY3 Specifications

Characteristic	Expected Value/Range
Back-to-back receiver sensitivity (BOL)	-48 dBm at 10^{-10} BER
Back-to-back receiver overload	-5 dBm at 10^{-9} BER
Output power level (BOL)	+3.4 dBm to +5.6 dBm

Table 7-51 SUPVY3 Specifications (continued)

Characteristic	Expected Value/Range
Center frequency/output wavelength	1510 nm 10 nm
Input return loss	≥ 20 dB
Extinction ratio (BOL)	≥ 10 dB

SUPVY1L L-Band Specifications

Refer to Table 7-51, ″SUPVY1L Specifications″, for the technical specifications for SUPVY1L.

Table 7-52 SUPVY1L Specifications

Characteristic	Expected Value/Range
Back-to-back receiver sensitivity (BOL)[1,2]	Minimum -45 dBm at 10^{-10} BER
Back-to-back receiver overload[1,2]	Minimum -5 dBm at 10^{-9} BER
Output power level (BOL)[1,2]	+1.7 dBm to +5.6 dBm
Center frequency/output wavelength	1620 nm ±3 nm
Input return loss	≥ 20 dB
Extinction ratio (BOL)	≥ 10 dB

Notes:

1. All power measurements require an optical power meter with a total uncertainty of 0.3 dB.
2. All expected power level values/ranges are specified with a 0 dB LBO installed in the circuit pack port.

WAD5-6

Refer to Table7-52, ″WAD5-6 Specifications″, for the technical specifications for WAD5-6.

Table 7-53 WAD 5-6 Specifications

Characteristic	Expected Value/Range
Insertion Loss ADD IN —> ADD OUT	2.0 dB maximum
Insertion Loss IN9xy0 —> ADD OUT (with jumper from ADD LOOP OUT to ADD LOOP IN)	5.5 dB maximum
Insertion Loss DROP IN —> DROP OUT	1.8 dB maximum
Insertion Loss DROP IN —> DROP LOOP OUT l	2.5 dB maximum
Insertion Loss DROP IN —> DROP LOOP OUT l	2.8 dB maximum
Insertion Loss DROP IN —> DROP LOOP OUT l	3.1 dB maximum

Table 7-53 WAD 5-6 Specifications (continued)

Characteristic	Expected Value/Range
Insertion Loss DROP IN —> DROP LOOP OUT l	3.4 dB maximum
Insertion Loss DROP LOOP IN —> OUT 9xy0 l	2.1 dB maximum
Insertion Loss DROP LOOP IN —> OUT 9xy0 l	2.6 dB maximum
Insertion Loss DROP LOOP IN —> OUT 9xy0 l	3.1 dB maximum
Insertion Loss DROP LOOP IN —> OUT 9xy0 l	3.6 dB maximum

OMON1 Specifications

Refer to Table 7-58, ″OMON1 Specifications″, for technical specifications for OMON1.

Table 7-54 OMON1 Specifications for C-Band

Characteristics	Expected Value/Range
Input Power Range	-10 to -40 dBm

OMON1L Specifications

Refer to Table 7-59, ″OMON1L Specifications″, for technical specifications for an L-Band OMON.

Table 7-55 OMON1L Specifications for L-Band

Characteristics	Expected Value/Range
Input Power Range	-10 to -40 dBm

□

Circuit Pack Output Wavelengths

OTU1 Refer to Table 7-56, “1.6T OTU1 Output Wavelengths” (7-52), for output wavelengths (as measured in a vacuum) for OTU1.

Table 7-56 1.6T OTU1 Output Wavelengths

CP Code	Freq (High) THz	Wavelength nm	Freq (Low) THz	Wavelength nm
W[S,U]NB01	195.800	1531.116	195.600	1532.681
W[S,U]NB02	195.400	1534.250	195.200	1535.822
W[S,U]NB03	195.000	1537.397	194.800	1538.976
W[S,U]NB04	194.600	1540.557	194.400	1542.142
W[S,U]NB05	194.200	1543.730	194.000	1545.322
W[S,U]NB06	193.800	1546.917	193.600	1548.515
W[S,U]NB07	193.400	1550.116	193.200	1551.721
W[S,U]NB08	193.000	1553.329	192.800	1554.940
W[S,U]NB09	192.600	1556.555	192.400	1558.173
W[S,U]NB10	192.200	1559.794	192.000	1561.419
W[S,U]NB11	195.700	1531.898	195.500	1533.465
W[S,U]NB12	195.300	1353.036	195.100	1635.609
W[S,U]NB13	194.900	1538.186	194.700	1939.766
W[S,U]NB14	194.500	1541.349	194.300	1542.936
W[S,U]NB15	194.100	1544.526	193.900	1546.119
W[S,U]NB16	193.700	1547.715	193.500	1549.315
W[S,U]NB17	193.300	1550.918	193.100	1552.524
W[S,U]NB18	192.900	1554.134	192.700	1555.747
W[S,U]NB19	192.500	1557.363	192.300	1558.983
W[S,U]NB20	192.100	1560.606	191.900	1562.233
W[S,U]NB21	195.850	1530.725	195.650	1532.290
W[S,U]NB22	195.450	1533.858	195.250	1535.429
W[S,U]NB23	195.050	1537.003	194.850	1538.581
W[S,U]NB24	194.650	1540.162	194.450	1541.746
W[S,U]NB25	194.250	1543.333	194.050	1544.924
W[S,U]NB26	193.850	1546.518	193.650	1548.115
W[S,U]NB27	193.450	1549.715	193.250	1551.319
W[S,U]NB28	193.050	1552.926	192.850	1554.537

Table 7-56 1.6T OTU1 Output Wavelengths (continued)

CP Code	Freq (High) THz	Wavelength nm	Freq (Low) THz	Wavelength nm
W[S,U]NB29	192.650	15561.151	192.450	1557.768
W[S,U]NB30	192.250	1559.389	192.050	1561.013
W[S,U]NB31	195.750	1531.507	195.550	1533.073
W[S,U]NB32	195.350	1534.643	195.150	1536.216
W[S,U]NB33	194.950	1537.792	194.750	1539.371
W[S,U]NB34	194.550	1540.953	194.350	1542.539
W[S,U]NB35	194.150	1544.128	193.950	1545.720
W[S,U]NB36	193.750	1547.316	193.550	1548.915
W[S,U]NB37	193.350	1550.517	193.150	1552.122
W[S,U]NB38	192.950	1553.731	192.750	1555.343
W[S,U]NB39	192.550	1556.959	192.350	1558.578
W[S,U]NB40	192.150	1560.200	191.950	1561.826

OTU1L Refer to Table 7-57, “OC-48/STM-16 OTUs (OTU1L)” (7-53)for output wavelengths (as measured in a vacuum) for OTU1L.

Table 7-57 OC-48/STM-16 OTUs (OTU1L)

Freq (Low) THz	Wavelength nm	Freq (High) THz	Wavelength nm	CP Code
190.200	1576.196	190.400	1574.540	WNNB01
189.800	1579.517	190.000	1577.855	WNNB02
189.400	1582.853	189.600	1581.184	WNNB03
189.000	1586.203	189.200	1584.526	WNNB04
188.600	1589.146	188.800	1587.883	WNNB05
188.200	1592.946	188.400	1591.255	WNNB06
187.800	1596.339	188.000	1594.640	WNNB07
187.400	1599.746	187.600	1598.041	WNNB08
187.000	1603.168	187.200	1601.455	WNNB09
186.600	1606.605	186.800	1604.884	WNNB10
190.100	1577.025	190.300	1575..367	WNNB11
189.700	1580.350	189.900	1578.686	WNNB12
189.300	1583.689	189.500	1582.018	WNNB13
188.900	1587.043	189.100	1585.364	WNNB14
188.500	1590.411	188.700	1588.725	WNNB15

Table 7-57 OC-48/STM-16 OTUs (OTU1L) (continued)

Freq (Low) THz	Wavelength nm	Freq (High) THz	Wavelength nm	CP Code
188.100	1593.793	188.300	1592.100	WNNB16
187.700	1597.189	187.900	1595.489	WNNB17
187.300	1600.600	187.500	1598.893	WNNB18
186.900	1604.026	187.100	1602.311	WNNB19
186.500	1607.466	186.700	1605.744	WNNB20

OTU2 Refer to Table 7-58, “1.6T OTU2 Output Wavelengths” (7-54), for output wavelengths (as measured in a vacuum) for OTU2.

Table 7-58 1.6T OTU2 Output Wavelengths

CP Code	Freq (High) THz	Wavelength nm	Freq (Low) THz	Wavelength nm
WSMB01	195.800	1531.116	195.600	1532.681
WSMB02	195.400	1534.250	195.200	1535.822
WSMB03	195.000	1537.397	194.800	1538.976
WSMB04	194.600	1540.557	194.400	1542.142
WSMB05	194.200	1543.730	194.000	1545.322
WSMB06	193.800	1546.917	193.600	1548.515
WSMB07	193.400	1550.116	193.200	1551.721
WSMB08	193.000	1553.329	192.800	1554.940
WSMB09	192.600	1556.555	192.400	1558.173
WSMB10	192.200	1559.794	192.000	1561.419
WSMB11	195.700	1531.898	195.500	1533.465
WSMB12	195.300	1353.036	195.100	1635.609
WSMB13	194.900	1538.186	194.700	1939.766
WSMB14	194.500	1541.349	194.300	1542.936
WSMB15	194.100	1544.526	193.900	1546.119
WSMB16	193.700	1547.715	193.500	1549.315
WSMB17	193.300	1550.918	193.100	1552.524
WSMB18	192.900	1554.134	192.700	1555.747
WSMB19	192.500	1557.363	192.300	1558.983
WSMB20	192.100	1560.606	191.900	1562.233
WSMB21	195.850	1530.725	195.650	1532.290
WSMB22	195.450	1533.858	195.250	1535.429

Table 7-58 1.6T OTU2 Output Wavelengths (continued)

CP Code	Freq (High) THz	Wavelength nm	Freq (Low) THz	Wavelength nm
WSMB23	195.050	1537.003	194.850	1538.581
WSMB24	194.650	1540.162	194.450	1541.746
WSMB25	194.250	1543.333	194.050	1544.924
WSMB26	193.850	1546.518	193.650	1548.115
WSMB27	193.450	1549.715	193.250	1551.319
WSMB28	193.050	1552.926	192.850	1554.537
WSMB29	192.650	1556.151	192.450	1557.768
WSMB30	192.250	1559.389	192.050	1561.013
WSMB31	195.750	1531.507	195.550	1533.073
WSMB32	195.350	1534.643	195.150	1536.216
WSMB33	194.950	1537.792	194.750	1539.371
WSMB34	194.550	1540.953	194.350	1542.539
WSMB35	194.150	1544.128	193.950	1545.720
WSMB36	193.750	1547.316	193.550	1548.915
WSMB37	193.350	1550.517	193.150	1552.122
WSMB38	192.950	1553.731	192.750	1555.343
WSMB39	192.550	1556.959	192.350	1558.578
WSMB40	192.150	1560.200	191.950	1561.826

OTU2L Refer to Table 7-57, “OC-48/STM-16 OTUs (OTU1L)” (7-53)for output wavelengths (as measured in a vacuum) for OTU2L.

Table 7-59 OC-48/STM-16 OTUs (OTU2L)

Freq (Low) THz	Wavelength nm	Freq (High) THz	Wavelength nm	CP Code
190.200	1576.196	190.400	1574.540	WNMB01
189.800	1579.517	190.000	1577.855	WNMB02
189.400	1582.853	189.600	1581.184	WNMB03
189.000	1586.203	189.200	1584.526	WNMB04
188.600	1589.146	188.800	1587.883	WNMB05
188.200	1592.946	188.400	1591.255	WNMB06
187.800	1596.339	188.000	1594.640	WNMB07
187.400	1599.746	187.600	1598.041	WMNB08
187.000	1603.168	187.200	1601.455	WNMB09

Table 7-59 OC-48/STM-16 OTUs (OTU2L) (continued)

Freq (Low) THz	Wavelength nm	Freq (High) THz	Wavelength nm	CP Code
186.600	1606.605	186.800	1604.884	WNMB10
190.100	1577.025	190.300	1575..367	WNMB11
189.700	1580.350	189.900	1578.686	WNMB12
189.300	1583.689	189.500	1582.018	WNMB13
188.900	1587.043	189.100	1585.364	WNMB14
188.500	1590.411	188.700	1588.725	WNMB15
188.100	1593.793	188.300	1592.100	WNMB16
187.700	1597.189	187.900	1595.489	WNMB17
187.300	1600.600	187.500	1598.893	WNMB18
186.900	1604.026	187.100	1602.311	WNMB19
186.500	1607.466	186.700	1605.744	WNMB20

OTU30 Refer to Table 7-60, “1.6T OTU30 Output Wavelengths” (7-56), for output wavelengths (as measured in a vacuum) for OTU30.

Table 7-60 1.6T OTU30 Output Wavelengths

CP Code	Freq (High) THz	Wavelength nm	Freq (Low) THz	Wavelength nm
W[S,U]PG01	195.800	1531.116	195.600	1532.681
W[S,U]PG02	195.400	1534.250	195.200	1535.822
W[S,U]PG03	195.000	1537.397	194.800	1538.976
W[S,U]PG04	194.600	1540.557	194.400	1542.142
W[S,U]PG05	194.200	1543.730	194.000	1545.322
W[S,U]PG06	193.800	1546.917	193.600	1548.515
W[S,U]PG07	193.400	1550.116	193.200	1551.721
W[S,U]PG08	193.000	1553.329	192.800	1554.940
W[S,U]PG09	192.600	1556.555	192.400	1558.173
W[S,U]PG10	192.200	1559.794	192.000	1561.419
W[S,U]PG11	195.700	1531.898	195.500	1533.465
W[S,U]PG12	195.300	1535.036	195.100	1536.609
W[S,U]PG13	194.900	1538.186	194.700	1539.766
W[S,U]PG14	194.500	1541.349	194.300	1542.936
W[S,U]PG15	194.100	1544.526	193.900	1546.119
W[S,U]PG16	193.700	1547.715	193.500	1549.315

Table 7-60 1.6T OTU30 Output Wavelengths (continued)

CP Code	Freq (High) THz	Wavelength nm	Freq (Low) THz	Wavelength nm
W[S,U]PG17	193.300	1550.918	193.100	1552.524
W[S,U]PG18	192.900	1554.134	192.700	1555.747
W[S,U]PG19	192.500	1557.363	192.300	1558.983
W[S,U]PG20	192.100	1560.606	191.900	1562.233
W[S,U]PG21	195.850	1530.725	195.650	1532.290
W[S,U]PG22	195.450	1533.858	195.250	1535.429
W[S,U]PG23	195.050	1537.003	194.850	1538.581
W[S,U]PG24	194.650	1540.162	194.450	1541.746
W[S,U]PG25	194.250	1543.333	194.050	1544.924
W[S,U]PG26	193.850	1546.518	193.650	1548.115
W[S,U]PG27	193.450	1549.715	193.250	1551.319
W[S,U]PG28	193.050	1552.926	192.850	1554.537
W[S,U]PG29	192.650	1556.151	192.450	1557.768
W[S,U]PG30	192.250	1559.389	192.050	1561.013
W[S,U]PG31	195.750	1531.507	195.550	1533.073
W[S,U]PG32	195.350	1534.643	195.150	1536.216
W[S,U]PG33	194.950	1537.792	194.750	1539.371
W[S,U]PG34	194.550	1540.953	194.350	1542.539
W[S,U]PG35	194.150	1544.128	193.950	1545.720
W[S,U]PG36	193.750	1547.316	193.550	1548.915
W[S,U]PG37	193.350	1550.517	193.150	1552.122
W[S,U]PG38	192.950	1553.731	192.750	1555.343
W[S,U]PG39	192.550	1556.959	192.350	1558.578
W[S,U]PG40	192.150	1560.200	191.950	1561.826

OTU30L Refer to Table 7-65 for for output wavelengths (as measured in a vacuum) for OTU30L.

Table 7-61 OC-192/STM-64 OTUs (OTU30L)

Freq (Low) THz	Wavelength nm	Freq (High) THz	Wavelength nm	CP Code
190.200	1576.196	190.400	1574.540	WNPG01
189.800	1579.517	190.000	1577.855	WNPG02
189.400	1582.853	189.600	1581.184	WNPG03

Table 7-61 OC-192/STM-64 OTUs (OTU30L) (continued)

Freq (Low) THz	Wavelength nm	Freq (High) THz	Wavelength nm	CP Code
189.000	1586.203	189.200	1584.526	WNPG04
188.600	1589.146	188.800	1587.883	WNPG05
188.200	1592.946	188.400	1591.255	WNPG06
187.800	1596.339	188.000	1594.640	WNPG07
187.400	1599.746	187.600	1598.041	WNPG08
187.000	1603.168	187.200	1601.455	WNPG09
186.600	1606.605	186.800	1604.884	WNPG10
190.100	1577.025	190.300	1575..367	WNPG11
189.700	1580.350	189.900	1578.686	WNPG12
189.300	1583.689	189.500	1582.018	WNPG13
188.900	1587.043	189.100	1585.364	WNPG14
188.500	1590.411	188.700	1588.725	WNPG15
188.100	1593.793	188.300	1592.100	WNPG16
187.700	1597.189	187.900	1595.489	WNPG17
187.300	1600.600	187.500	1598.893	WNPG18
186.900	1604.026	187.100	1602.311	WNPG19
186.500	1607.466	186.700	1605.744	WNPG20

OTU31 Refer to Table 7-62, “1.6T OTU31 Output Wavelengths” (7-58), for output wavelengths (as measured in a vacuum) for OTU31.

Table 7-62 1.6T OTU31 Output Wavelengths

CP Code	Freq (High) THz	Wavelength nm	Freq (Low) THz	Wavelength nm
WSRG01	195.800	1531.116	195.600	1532.681
WSRG02	195.400	1534.250	195.200	1535.822
WSRG03	195.000	1537.397	194.800	1538.976
WSRG04	194.600	1540.557	194.400	1542.142
WSRG05	194.200	1543.730	194.000	1545.322
WSRG06	193.800	1546.917	193.600	1548.515
WSRG07	193.400	1550.116	193.200	1551.721
WSRG08	193.000	1553.329	192.800	1554.940
WSRG09	192.600	1556.555	192.400	1558.173
WSRG10	192.200	1559.794	192.000	1561.419

Table 7-62 1.6T OTU31 Output Wavelengths (continued)

CP Code	Freq (High) THz	Wavelength nm	Freq (Low) THz	Wavelength nm
WSRG11	195.700	1531.898	095.500	1533.465
WSRG12	195.300	1535.036	195.100	1536.609
WSRG13	194.900	1538.186	194.700	1539.766
WSRG14	194.500	1541.349	194.300	1542.936
WSRG15	194.100	1544.526	193.900	1546.119
WSRG16	193.700	1547.715	193.500	1549.315
WSRG17	193.300	1550.918	193.100	1552.524
WSRG18	192.900	1554.134	192.700	1555.747
WSRG19	192.500	1557.363	192.300	1558.983
WSRG20	192.100	1560.606	191.900	1562.233
WSRG21	195.850	1530.725	195.650	1532.290
WSRG22	195.450	1533.858	195.250	1535.429
WSRG23	195.050	1537.003	194.850	1538.581
WSRG24	194.650	1540.162	194.450	1541.746
WSRG25	194.250	1543.333	194.050	1544.924
WSRG26	193.850	1546.518	193.650	1548.115
WSRG27	193.450	1549.715	193.250	1551.319
WSRG28	193.050	1552.926	192.850	1554.537
WSRG29	192.650	1556.151	192.450	1557.768
WSRG30	192.250	1559.389	192.050	1561.013
WSRG31	195.750	1531.507	195.550	1533.073
WSRG32	195.350	1534.643	195.150	1536.216
WSRG33	194.950	1537.792	194.750	1539.371
WSRG34	194.550	1540.953	194.350	1542.539
WSRG35	194.150	1544.128	193.950	1545.720
WSRG36	193.750	1547.316	193.550	1548.915
WSRG37	193.350	1550.517	193.150	1552.122
WSRG38	192.950	1553.731	192.750	1555.343
WSRG39	192.550	1556.959	192.350	1558.578
WSRG40	192.150	1560.200	191.950	1561.826

OTU31L Refer to Table 7-67 for output wavelengths (as measured in a vacuum) for OTU31L.

Table 7-63 OC-192/STM-64 OTUs (OTU31L)

Freq (Low) THz	Wavelength nm	Freq (High) THz	Wavelength nm	CP Code
190.200	1576.196	190.400	1574.540	WNRG01
189.800	1579.517	190.000	1577.855	WNRG02
189.400	1582.853	189.600	1581.184	WNRG03
189.000	1586.203	189.200	1584.526	WNRG04
188.600	1589.146	188.800	1587.883	WNRG05
188.200	1592.946	188.400	1591.255	WNRG06
187.800	1596.339	188.000	1594.640	WNRG07
187.400	1599.746	187.600	1598.041	WNRG08
187.000	1603.168	187.200	1601.455	WNRG09
186.600	1606.605	186.800	1604.884	WNRG10
190.100	1577.025	190.300	1575..367	WNRG11
189.700	1580.350	189.900	1578.686	WNRG12
189.300	1583.689	189.500	1582.018	WNRG13
188.900	1587.043	189.100	1585.364	WNRG14
188.500	1590.411	188.700	1588.725	WNRG15
188.100	1593.793	188.300	1592.100	WNRG16
187.700	1597.189	187.900	1595.489	WNRG17
187.300	1600.600	187.500	1598.893	WNRG18
186.900	1604.026	187.100	1602.311	WNRG19
186.500	1607.466	186.700	1605.744	WNRG20

OTU40 Refer to Table 7-64, “1.6T OTU40 Output Wavelengths” (7-60), for output wavelengths (as measured in a vacuum) for OTU40.

Table 7-64 1.6T OTU40 Output Wavelengths

CP Code	Freq (High) THz	Wavelength nm	Freq (Low) THz	Wavelength nm
W[S,U]JB01	195.800	1531.116	195.600	1532.681
W[S,U]JB02	195.400	1534.250	195.200	1535.822
W[S,U]JB03	195.000	1537.397	194.800	1538.976
W[S,U]JB04	194.600	1540.557	194.400	1542.142
W[S,U]JB05	194.200	1543.730	194.000	1545.322

Table 7-64 1.6T OTU40 Output Wavelengths (continued)

CP Code	Freq (High) THz	Wavelength nm	Freq (Low) THz	Wavelength nm
W[S,U]JB06	193.800	1546.917	193.600	1548.515
W[S,U]JB07	193.400	1550.116	193.200	1551.721
W[S,U]JB08	193.000	1553.329	192.800	1554.940
W[S,U]JB09	192.600	1556.555	192.400	1558.173
W[S,U]JB10	192.200	1559.794	192.000	1561.419
W[S,U]JB11	195.700	1531.898	195.500	1533.465
W[S,U]JB12	195.300	1353.036	195.100	1635.609
W[S,U]JB13	194.900	1538.186	194.700	1939.766
W[S,U]JB14	194.500	1541.349	194.300	1542.936
W[S,U]JB15	194.100	1544.526	193.900	1546.119
W[S,U]JB16	193.700	1547.715	193.500	1549.315
W[S,U]JB17	193.300	1550.918	193.100	1552.524
W[S,U]JB18	192.900	1554.134	192.700	1555.747
W[S,U]JB19	192.500	1557.363	192.300	1558.983
W[S,U]JB20	192.100	1560.606	191.900	1562.233
W[S,U]JB21	195.850	1530.725	195.650	1532.290
W[S,U]JB22	195.450	1533.858	195.250	1535.429
W[S,U]JB23	195.050	1537.003	194.850	1538.581
W[S,U]JB24	194.650	1540.162	194.450	1541.746
W[S,U]JB25	194.250	1543.333	194.050	1544.924
W[S,U]JB26	193.850	1546.518	193.650	1548.115
W[S,U]JB27	193.450	1549.715	193.250	1551.319
W[S,U]JB28	193.050	1552.926	192.850	1554.537
W[S,U]JB29	192.650	1556.151	192.450	1557.768
W[S,U]JB30	192.250	1559.389	192.050	1561.013
W[S,U]JB31	195.750	1531.507	195.550	1533.073
W[S,U]JB32	195.350	1534.643	195.150	1536.216
W[S,U]JB33	194.950	1537.792	194.750	1539.371
W[S,U]JB34	194.550	1540.953	194.350	1542.539
W[S,U]JB35	194.150	1544.128	193.950	1545.720
W[S,U]JB36	193.750	1547.316	193.550	1548.915
W[S,U]JB37	193.350	1550.517	193.150	1552.122

Table 7-64 1.6T OTU40 Output Wavelengths (continued)

CP Code	Freq (High) THz	Wavelength nm	Freq (Low) THz	Wavelength nm
W[S,U]JB38	192.950	1553.731	192.750	1555.343
W[S,U]JB39	192.550	1556.959	192.350	1558.578
W[S,U]JB40	192.150	1560.200	191.950	1561.826

OTU40L Refer to Table 7-69 for output wavelengths (as measured in a vacuum) for OTU40L.

Table 7-65 HSBB (OTU40L)

Freq (Low) THz	Wavelength nm	Freq (High) THz	Wavelength nm	CP Code
190.200	1576.196	190.400	1574.540	WNJB01
189.800	1579.517	190.000	1577.855	WNJB02
189.400	1582.853	189.600	1581.184	WRNJB03
189.000	1586.203	189.200	1584.526	WNJB04
188.600	1589.146	188.800	1587.883	WNJB05
188.200	1592.946	188.400	1591.255	WNJB06
187.800	1596.339	188.000	1594.640	WNJB07
187.400	1599.746	187.600	1598.041	WNJB08
187.000	1603.168	187.200	1601.455	WNJB09
186.600	1606.605	186.800	1604.884	WNJB10
190.100	1577.025	190.300	1575..367	WNJB11
189.700	1580.350	189.900	1578.686	WNJB12
189.300	1583.689	189.500	1582.018	WNJB13
188.900	1587.043	189.100	1585.364	WNJB14
188.500	1590.411	188.700	1588.725	WNJB15
188.100	1593.793	188.300	1592.100	WNJB16
187.700	1597.189	187.900	1595.489	WNJB17
187.300	1600.600	187.500	1598.893	WNJB18
186.900	1604.026	187.100	1602.311	WNJB19
186.500	1607.466	186.700	1605.744	WNJB20

C-Band DCM Values

Required DCM

Table 7-66, "C-Band DCM Values" (7-63), shows the required amount of Dispersion Compensation, dependent upon the route and fiber along the route. Use the ***WaveStar® Span Engineering Tool*** (365-575-710) to determine the required DCM values.

Table 7-66 C-Band DCM Values

Module	Dispersion at 1530nm min/max value (ps/nm)	Dispersion at 1563nm min/max value (ps/nm)	Insertion Loss at 1530 to 1568 nm Including One Connector-Connector Interface
DCM-2.5	-42/-36	-47/-38	≤ 2.2 dBm
DCM-5.0	-82/-74	-91/-79	≤ 2.3 dBm
DCM-7.5	-122/-112	-135/-119	≤ 2.5 dBm
DCM-10	-160/-151	-178/-161	≤ 2.7 dBm
DCM-20	-321/-302	-357/-320	≤ 3.5 dBm
DCM-30	-481/-453	-537/-480	≤ 4.5 dBm
DCM-40	-641/-604	-715/-641	≤ 5.5 dBm
DCM-50	-801/-755	-894/-801	≤ 6.5 dBm
DCM-60	-962/-906	-1073/-962	≤ 7.5 dBm
DCM-70	-1122/-1057	-1252/-1122	≤ 8.5 dBm
DCM-80	-1283/-1208	-1430/-1282	≤ 9.5 dBm
DCM-90	-1444/-1360	-1609/-1443	≤ 10.5 dBm
DCM-100			
DCMLS-40			
DCMLS-60			

L-Band DCM Values

Required DCM Table 7-66, "C-Band DCM Values" (7-63), shows the required amount of Dispersion Compensation dependent upon the route and fiber along the route. Use the ***WaveStar® Span Engineering Tool*** (WaveSET, Comcode 365-575-710) to determine the required DCM values.

Table 7-67 L-Band DCM Values

Module	Dispersion at 1574 nm min/max value (ps/nm)	Dispersion at 1608 nm min/max value (ps/nm)	Insertion Loss at 1574 to 1608 nm Including One Connector-Connector Interface
DCM-NZDSFL-5L	-28/-25	-35/-32	≤ 2.3 dBm
DCM-NZDSFL-10L	-57/-50	-73/-63	≤ 2.6dBm
DCM-NZDSF-20L	-114.5/-100	-146/-126	≤ 2.9 dBm
DCM-NZDSF-30L	-170/-152	-217/-191	≤ 3.2 dBm
DCM-NZDSF-40L	-227/-203	-289/-255	≤ 3.5 dBm
DCM-NZDSF-50L	-283/-253	-361/-318	≤ 3.7 dBm
DCM-NZDSF-60L	-340/-304	-506/-446	≤ 4.1 dBm
DCM-NZDSF-70L	-397/-355	-578/-509	≤ 4.3 dBm
DCM-NZDSF-80L	-453/-405	-578/-509	≤ 4.6 dBm
DCM-NZDSF-90L	-510/-457	-651/-573	≤ 5.0 dBm
DCML-2.5			
DCML-5.0			
DCML-7.5			
DCML-10			
DCML-12.5			
DCML-15			
DCML-17.5			
DCML-20			
DCML-22.5			
DCML-25			
DCML-27.5			

Appendix A: Optical Spectrum/Channel Information

Overview

Purpose

This appendix provides information on optical spectrum/channels for C-Band and L-Band configurations.

Contents

C-Band OMU Optical Spectrum Details	A-2
L-Band OMU Optical Spectrum Details	A-5
C-Band ODU Optical Spectrum Details	A-8
L-Band ODU Optical Spectrum Details	A-11
WAD Channel Allocations	A-14

C-Band OMU Optical Spectrum Details

50 GHz Spacing Channel Allocation

Table A-1, “50 GHz Spacing OMU Channel Assignment” (A-2) indicates the Channel Number, frequency, and corresponding wavelength for each OMU when channel spacing is 50 GHz.

Table A-1 50 GHz Spacing OMU Channel Assignment

Channel Number	Frequency THz	Wavelength nm	OMU Channel Appearance	
			OMU1	OMU2
1	195.850	1530.725		X
2	195.800	1531.116	X	
3	195.750	1531.507		X
4	195.700	1531.898	X	
5	195.650	1532.289		X
6	195.600	1532.681	X	
7	195.550	1533.073		X
8	195.500	1533.465	X	
9	195.450	1533.857		X
10	195.400	1534.250	X	
11	195.350	1534.643		X
12	195.300	1535.035	X	
13	195.250	1535.429		X
14	195.200	1535.822	X	
15	195.150	1536.215		X
16	195.100	1536.609	X	
17	195.050	1537.003		X
18	195.000	1537.397	X	
19	194.950	1537.791		X
20	194.900	1538.186	X	
21	194.850	1538.581		X
22	194.800	1538.975	X	
23	194.750	1539.371		X
24	194.700	1539.766	X	
25	194.650	1540.161		X

Table A-1 50 GHz Spacing OMU Channel Assignment (continued)

Channel Number	Frequency THz	Wavelength nm	OMU Channel Appearance	
			OMU1	OMU2
26	194.600	1540.557	X	
27	194.550	1540.953		X
28	194.500	1541.349	X	
29	194.450	1541.746		X
30	194.400	1542.142	X	
31	194.350	1542.539		X
32	194.300	1542.936	X	
33	194.250	1543.333		X
34	194.200	1543.730	X	
35	194.150	1544.128		X
36	194.100	1544.526	X	
37	194.050	1544.924		X
38	194.000	1545.322	X	
39	193.950	1545.720		X
40	193.900	1546.119	X	
41	193.850	1546.518		X
42	193.800	1546.917	X	
43	193.750	1547.316		X
44	193.700	1547.715	X	
45	193.650	1548.115		X
46	193.600	1548.515	X	
47	193.550	1548.915		X
48	193.500	1549.315	X	
49	193.450	1549.715		X
50	193.400	1550.116	X	
51	193.350	1550.517		X
52	193.300	1550.918	X	
53	193.250	1551.319		X
54	193.200	1551.721	X	
55	193.150	1552.122		X
56	193.100	1552.524	X	

Table A-1 50 GHz Spacing OMU Channel Assignment (continued)

Channel Number	Frequency THz	Wavelength nm	OMU Channel Appearance	
			OMU1	OMU2
57	193.050	1552.926		X
58	193.000	1553.329	X	
59	192.950	1553.731		X
60	192.900	1554.134	X	
61	192.850	1554.537		X
62	192.800	1554.940	X	
63	192.750	1555.343		X
64	192.700	1555.747	X	
65	192.650	1556.151		X
66	192.600	1556.555	X	
67	192.550	1556.959		X
68	192.500	1557.363	X	
69	192.450	1557.768		X
70	192.400	1558.173	X	
71	192.350	1558.578		X
72	192.300	1558.983	X	
73	192.250	1559.388		X
74	192.200	1559.794	X	
75	192.150	1560.200		X
76	192.100	1560.606	X	
77	192.050	1561.012		X
78	192.000	1561.419	X	
79	191.950	1561.826		X
80	191.900	1562.233	X	

L-Band OMU Optical Spectrum Details

50 GHz Spacing L-Band OMU Channel Allocation

Table A-2, 50 GHz Spacing L-Band OMU Channel Allocation, indicates the Channel Number, frequency, and corresponding wavelength for each OMU when channel spacing is 50 GHz within the L-Band Optical Spectrum.

Table A-2 50 GHz Spacing L-Band OMU Channel Assignment

Channel Number	Frequency THz	Wavelength nm	OMU Channel Appearance	
			OMU1L	OMU2L
1	186.500	1607.466	X	
2	186.550	1607.035		X
3	186.600	1606.605	X	
4	186.650	1606.174		X
5	188.700	1605.744	X	
6	186.750	1605.314		X
7	186.800	1604.884	X	
8	186.850	1604.455		X
9	186.900	1604.026	X	
10	186.950	1603.597		X
11	187.000	1603.168	X	
12	187.050	1602.739		X
13	187.100	1602.311	X	
14	187.150	1601.833		X
15	187.200	1601.455	X	
16	187.250	1601.028		X
17	187.300	1600.600	X	
18	187.350	1600.173		X
19	187.400	1599.746	X	
20	187.450	1599.319		X
21	187.500	1598.893	X	
22	187.550	1598.467		X
23	187.600	1598.041	X	
24	187.650	1597.615		X
25	187.700	1597.189	X	

Table A-2 50 GHz Spacing L-Band OMU Channel Assignment (continued)

Channel Number	Frequency THz	Wavelength nm	OMU Channel Appearance	
			OMU1L	OMU2L
26	187.750	1596.764		X
27	187.800	1596.339	X	
28	187.850	1595.914		X
29	187.900	1595.489	X	
30	187.950	1595.065		X
31	188.000	1594.640	X	
32	188.050	1594.216		X
33	188.100	1593.793	X	
34	188.150	1593.369		X
35	188.200	1592.946	X	
36	188.250	1592.523		X
37	188.300	1592.100	X	
38	188.350	1591.677		X
39	188.400	1591.255	X	
40	188.450	1590.833		X
41	188.500	1590.411	X	
42	188.550	1589.989		X
43	188.600	1589.567	X	
44	188.650	1589.146		X
45	188.700	1588.725	X	
46	188.750	1588.304		X
47	188.800	1587.833	X	
48	188.850	1587.463		X
49	188.900	1587.043	X	
50	188.950	1586.623		X
51	189.000	1586.203	X	
52	189.050	1585.784		X
53	189.100	1585.364	X	
54	189.150	1584.945		X
55	189.200	1584.526	X	

Table A-2 50 GHz Spacing L-Band OMU Channel Assignment (continued)

Channel Number	Frequency THz	Wavelength nm	OMU Channel Appearance	
			OMU1L	OMU2L
56	189.250	1584.108		X
57	189.300	1583.689	X	
58	189.350	1583.271		X
59	189.400	1582.853	X	
60	189.450	1582.435		X
61	189.500	1582.018	X	
62	189.550	1581.601		X
63	189.600	1581.184	X	
64	189.650	1580.767		X
65	189.700	1580.350	X	
66	189.750	1579.934		X
67	189.800	1579.517	X	
68	189.850	1579.101		X
69	189.900	1578.686	X	
70	189.950	1578.270		X
71	190.000	1577.855	X	
72	190.050	1577.440		X
73	190.100	1577.025	X	
74	190.150	1576.610		X
75	190.200	1576.196	X	
76	190.250	1575.781		X
77	190.300	1575.367	X	
78	190.350	1574.954		X
79	190.400	1574.540	X	
80	190.450	1574.127		X

C-Band ODU Optical Spectrum Details

50 GHz Spacing Channel Allocation

Table A-3, “50 GHz Spacing ODU Channel Allocation” (A-8) indicates the Channel Number, frequency, and corresponding wavelength for each ODU when channel spacing is 50 GHz.

Table A-3 50 GHz Spacing ODU Channel Allocation

Channel Number	Frequency THz	Wavelength nm	Optical Demultiplexer Unit Channel Assignments	
			ODU1C	ODU2C
1	195.850	1530.725		X
2	195.800	1531.116	X	
3	195.750	1531.507		X
4	195.700	1531.898	X	
5	195.650	1532.289		X
6	195.600	1532.681	X	
7	195.550	1533.073		X
8	195.500	1533.465	X	
9	195.450	1533.857		X
10	195.400	1534.250	X	
11	195.350	1534.643		X
12	195.300	1535.035	X	
13	195.250	1535.429		X
14	195.200	1535.822	X	
15	195.150	1536.215		X
16	195.100	1536.609	X	
17	195.050	1537.003		X
18	195.000	1537.397	X	
19	194.950	1537.791		X
20	194.900	1538.186	X	
21	194.850	1538.581		X
22	194.800	1538.975	X	
23	194.750	1539.371		X
24	194.700	1539.766	X	
25	194.650	1540.161		X

Table A-3 50 GHz Spacing ODU Channel Allocation (continued)

Channel Number	Frequency THz	Wavelength nm	Optical Demultiplexer Unit Channel Assignments	
			ODU1C	ODU2C
26	194.600	1540.557	X	
27	194.550	1540.953		X
28	194.500	1541.349	X	
29	194.450	1541.746		X
30	194.400	1542.142	X	
31	194.350	1542.539		X
32	194.300	1542.936	X	
33	194.250	1543.333		X
34	194.200	1543.730	X	
35	194.150	1544.128		X
36	194.100	1544.526	X	
37	194.050	1544.924		X
38	194.000	1545.322	X	
39	193.950	1545.720		X
40	193.900	1546.119	X	
41	193.850	1546.518		X
42	193.800	1546.917	X	
43	193.750	1547.316		X
44	193.700	1547.715	X	
45	193.650	1548.115		X
46	193.600	1548.515	X	
47	193.550	1548.915		X
48	193.500	1549.315	X	
49	193.450	1549.715		X
50	193.400	1550.116	X	
51	193.350	1550.517		X
52	193.300	1550.918	X	
53	193.250	1551.319		X
54	193.200	1551.721	X	

Table A-3 50 GHz Spacing ODU Channel Allocation (continued)

Channel Number	Frequency THz	Wavelength nm	Optical Demultiplexer Unit Channel Assignments	
			ODU1C	ODU2C
55	193.150	1552.122		X
56	193.100	1552.524	X	
57	193.050	1552.926		X
58	193.000	1553.329	X	
59	192.950	1553.731		X
60	192.900	1554.134	X	
61	192.850	1554.537		X
62	192.800	1554.940	X	
63	192.750	1555.343		X
64	192.700	1555.747	X	
65	192.650	1556.151		X
66	192.600	1556.555	X	
67	192.550	1556.959		X
68	192.500	1557.363	X	
69	192.450	1557.768		X
70	192.400	1558.173	X	
71	192.350	1558.578		X
72	192.300	1558.983	X	
73	192.250	1559.388		X
74	192.200	1559.794	X	
75	192.150	1560.200		X
76	192.100	1560.606	X	
77	192.050	1561.012		X
78	192.000	1561.419	X	
79	191.950	1561.826		X
80	191.900	1562.233	X	

L-Band ODU Optical Spectrum Details

50 GHz Spacing L-Band ODU Channel Allocation

Table A-1, "50 GHz Spacing OMU Channel Assignment" (A-2) indicates the Channel Number, frequency, and corresponding wavelength for each L-Band ODU when channel spacing is 50 GHz within the L-Band Optical Spectrum.

Table A-4 50 GHz Spacing L-Band ODU Channel Assignment

Channel Number	Frequency THz	Wavelength nm	OMU Channel Appearance	
			ODU21	ODU22
1	186.500	1607.466	X	
2	186.550	1607.035		X
3	186.600	1606.605	X	
4	186.650	1606.174		X
5	188.700	1605.744	X	
6	186.750	1605.314		X
7	186.800	1604.884	X	
8	186.850	1604.455		X
9	186.900	1604.026	X	
10	186.950	1603.597		X
11	187.000	1603.168	X	
12	187.050	1602.739		X
13	187.100	1602.311	X	
14	187.150	1601.833		X
15	187.200	1601.455	X	
16	187.250	1601.028		X
17	187.300	1600.600	X	
18	187.350	1600.173		X
19	187.400	1599.746	X	
20	187.450	1599.319		X
21	187.500	1598.893	X	
22	187.550	1598.467		X
23	187.600	1598.041	X	
24	187.650	1597.615		X
25	187.700	1597.189	X	

Table A-4 50 GHz Spacing L-Band ODU Channel Assignment (continued)

Channel Number	Frequency THz	Wavelength nm	OMU Channel Appearance	
			ODU21	ODU22
26	187.750	1596.764		X
27	187.800	1596.339	X	
28	187.850	1595.914		X
29	187.900	1595.489	X	
30	187.950	1595.065		X
31	188.000	1594.640	X	
32	188.050	1594.216		X
33	188.100	1593.793	X	
34	188.150	1593.369		X
35	188.200	1592.946	X	
36	188.250	1592.523		X
37	188.300	1592.100	X	
38	188.350	1591.677		X
39	188.400	1591.255	X	
40	188.450	1590.833		X
41	188.500	1590.411	X	
42	188.550	1589.989		X
43	188.600	1589.567	X	
44	188.650	1589.146		X
45	188.700	1588.725	X	
46	188.750	1588.304		X
47	188.800	1587.833	X	
48	188.850	1587.463		X
49	188.900	1587.043	X	
50	188.950	1586.623		X
51	189.000	1586.203	X	
52	189.050	1585.784		X
53	189.100	1585.364	X	
54	189.150	1584.945		X
55	189.200	1584.526	X	

Table A-4 50 GHz Spacing L-Band ODU Channel Assignment (continued)

Channel Number	Frequency THz	Wavelength nm	OMU Channel Appearance	
			ODU21	ODU22
56	189.250	1584.108		X
57	189.300	1583.689	X	
58	189.350	1583.271		X
59	189.400	1582.853	X	
60	189.450	1582.435		X
61	189.500	1582.018	X	
62	189.550	1581.601		X
63	189.600	1581.184	X	
64	189.650	1580.767		X
65	189.700	1580.350	X	
66	189.750	1579.934		X
67	189.800	1579.517	X	
68	189.850	1579.101		X
69	189.900	1578.686	X	
70	189.950	1578.270		X
71	190.000	1577.855	X	
72	190.050	1577.440		X
73	190.100	1577.025	X	
74	190.150	1576.610		X
75	190.200	1576.196	X	
76	190.250	1575.781		X
77	190.300	1575.367	X	
78	190.350	1574.954		X
79	190.400	1574.540	X	
80	190.450	1574.127		X

WAD Channel Allocations

50 GHz Spacing Allocation

Table A-5, "50 GHz Spacing Wavelength Add/Drop Channel Assignment" (A-14) indicates the Channel Number, frequency, and corresponding wavelength for circuit packs WAD5 and WAD6 when channel spacing is 50 GHz.

Table A-5 50 GHz Spacing Wavelength Add/Drop Channel Assignment

Frequency THz	Wavelength nm	Channel Number	Wavelength Add/Drop Channel Assignment	
			WAD5	WAD6
195.850	1530.725	1		
195.800	1531.116	2	X	
195.750	1531.507	3		
195.700	1531.898	4		X
195.650	1532.289	5		
195.600	1532.681	6	X	
195.550	1533.073	7		
195.500	1533.465	8		X
195.450	1533.857	9		
195.400	1534.250	10	X	
195.350	1534.643	11		
195.300	1535.035	12		X
195.250	1535.429	13		
195.200	1535.822	14	X	
195.150	1536.215	15		
195.100	1536.609	16		X

100 GHz Spacing Allocation

Table A-6, "100 GHz Spacing Wavelength Add/Drop Channel Assignment" (A-14) indicates the Channel Number, frequency, and corresponding wavelength for circuit packs WAD5 and WAD6 when channel spacing is 100 GHz.

Table A-6 100 GHz Spacing Wavelength Add/Drop Channel Assignment

Frequency THz	Wavelength nm	Channel Number	WAD Channel Banding	
			WAD5	WAD6
195.800	1531.116	1	X	

Table A-6 100 GHz Spacing Wavelength Add/Drop Channel Assignment (continued)

Frequency THz	Wavelength nm	Channel Number	WAD Channel Banding	
			WAD5	WAD6
195.700	1531.898	2		X
195.600	1532.681	3	X	
195.500	1533.465	4		X
195.400	1534.250	5	X	
195.300	1535.035	6		X
195.200	1535.822	7	X	
195.100	1536.609	8		X

Glossary

A

ABN
Abnormal (condition).

Access Identifier (AID)
A unique identifier used to address equipment slots and ports, as well as facility tributaries, that are defined for the OLS architecture.

ACO
Alarm Cutoff

AGNE
Alarm Gateway Network Element

AID
Access Identifier

AIM
Alarm Indication Message

AIS
Alarm Indication Signal

Alarm
A visible or audible signal that indicates a communication, equipment, or processing failure has occurred.

Alarm Cut-Off (ACO)
A push-button switch on the indicator strip that can be used to retire an audible office alarm.

Alarm Gateway Network Element (AGNE)
A defined Network Element in an alarm group through which members of the alarm group exchange information.

Alarm Indication Signal (AIS)
A code transmitted downstream in a digital network indicating that an upstream failure has been detected and alarmed if the upstream alarm has not been suppressed.

Alarm Severity
An attribute defining the priority of the alarm message. The way alarms are cleared depends on the level of severity.

Alarm Suppression
Selective removal of alarm messages from being forwarded to the GUI or to network management layer OSs.

Alarm Throttling
A feature that automatically or manually suppresses autonomous messages that are not priority alarms.

Aligning
Indicating the head of a virtual container by means of a pointer, for example, creating an Administrative Unit (AU) or a Tributary Unit (TU).

American Standard Code for Information Interchange (ASCII)
A standard 7-bit code that represents letters, numbers, punctuation marks, and special characters in the interchange of data among computing and communications equipment.

Amplitude
Amplitude is a measure of the intensity of the wave and is defined as the distance from the center of the wave to its peak (half the distance from peak to peak).

APD
Avalanche Photo Diode

APSD
Automatic Power Shutdown

Area
A group of nodes in which there is only IS-IS Level 1 routing of traffic. Nodes in an Area do not maintain detailed routing information to nodes outside the area.

Area Address
A variable length quantity consisting of the entire high order part of the Network Service Access Point (NSAP) excluding the 6 byte System Identifier (SID) and Selector (SEL). Used for interarea routing through the Level 2 subdomain.

Area ID
A user provisionable four digit (Hex) number that is used for IS-IS routing purposes in a network.

Asynchronous
Refers to network elements that are not timed from references traceable to a single Stratum-1 source.

Attribute
Alarm indication level: CR, DEFERRED, MJ, MN, NA, NOT ALARMED, NOT REPORTED, NR, or PROMPT.

AUTO
Automatic

Automatic (AUTO)
One possible state of a port or slot. When a port is in the AUTO state and a good signal is detected, the port automatically enters the IS (in-service) state.

Automatic Power Shutdown (APSD)
A safety procedure automatically performed by the OLS when a loss of optical power occurs. APSD powers down the Optical Amplifier to safe, Class 1 levels then restarts it once the system has been repaired or links have been re-established.

Automatic Protection Switch
A protection switch that occurs automatically in response to an automatically detected fault condition.

Avalanche Photo Diode (APD)
APD is a receiver that translates optical signals back to electrical pulses.

B

Backup
The backup and restoration features provide the capability to recover from loss of NE data because of such factors as human error, power failure, NE design flaws, and software bugs.

Bandwidth
The difference in Hz between the highest and lowest frequencies in a transmission channel. The data rate that can be carried by a given communications circuit.

Baud Rate
Transmission rate of data (bits per second) on a network link.

Bay
A hardware frame in which shelves are mounted and housed.

BCLAN
Board Controller Local Area Network

BER
Bit Error Rate

BES
Bursty Errored Second Count

Bidirectional Line
A transmission path consisting of two fibers that handle traffic in both the transmit and receive directions.

BIP-N
Bit Interleaved Parity

Bit
The smallest unit of information in a computer, with a value of either 0 or 1.

Bit Error Rate (BER)
BER measures how accurately a bit stream is transmitted through a system. It measures how many bits are received in error compared to how many are sent.

Bit Error Rate Threshold
The point at which an alarm is issued for bit errors.

Bit Interleaved Parity-N (BIP-N)
A method of error monitoring over a specified number of bits (BIP-3 or BIP-8).

Board Controller Local Area Network (BCLAN)
The internal local area network that provides communications between the line and board controllers on the circuit packs associated with a high-speed line.

BOS
Bay/Overhead/System controller

BRM
Bit Rate Map

Broadband Communications
Voice, data, and/or video communications at greater than 2 Mb/s rates.

BW
bandwidth

Byte
Refers to a group of eight consecutive binary digits.

C

C+L Separator and Combiner (CLSC) Apparatus Units
The CLSC apparatus unit combines two independent DWDM line systems (one using the C-band, and the other using the L-band) onto a single fiber pair. In transmission paths, Single C+L Separator and Combiner (CLSC-S) and Double C+L Separator and Combiner (CLSC-D) apparatus units are used for C+L applications. CLSC-S is used in terminal systems, and CLSC-D is used in repeater/ring sites.

CCITT
Comité Consultatif International Télégraphique et Téléphonique. See ITU-T.

CD-ROM
compact disk–read-only memory

Central Office (CO)
A building where common carriers terminate customer circuits.

Channel
A sub-unit of transmission capacity within a defined higher level of transmission capacity.

Circuit Pack (CP)
A single field-replaceable electronic or opto-electronic unit. It comprises mechanical piece-parts, electronic components, and their associated connections and performs a specific function.

CIT
Craft Interface Terminal

CIT-PC
PC Based Craft Interface Terminal

CLEI
Common Language Equipment Identifier

Closed Ring Network
A network formed of a ring-shaped configuration of network elements. Each network element connects to two others, one on each side.

CLSC
C+L Separator and Combiner apparatus unit

CLSC-D
C+L Separator and Combiner apparatus unit with Double Separator and Combiner functions

CLSC-S
C+L Separator and Combiner apparatus unit with Single Separator and Combiner functions

CMS
See customer maintenance signal

CO
Central Office

CO-LAN
central office local area network

Coding Violation (CV)
A performance monitoring parameter indicating that bipolar violations of the signal have occurred.

Collocated
Located in the same Central Office

Comcode
Lucent Technologies ordering code for cables and other equipment.

Common Language Equipment Identifier (CLEI)
Codes that are assigned by Bellcore to provide a standard method of identifying telecommunications equipment in a uniform, feature-oriented language. Bellcore GR-485-CORE specification contains generic guidelines for Common Language Equipment Coding Processes and Guidelines.

Common Management Information Service Element (CMISE)
Entities that the Common Management Information Protocol (CMIP) uses to communicate. CMISE exchanges network management information between two management systems, or between a management system and an application. CMIP/CMISE is designed for OSI networks, but it is transport independent.

Concatenation
A procedure whereby multiple virtual containers are associated one with each other resulting in a combined capacity that can be used as a single container across which bit sequence integrity is maintained.

Configuration Management (CM)
Subsystem that configures the network and processes messages from the network.

Consultative Committee for the International Telephone and Telegraph (CCITT)
International Telephone and Telegraph Consultative Committee — An international advisory committee under United Nations' sponsorship that has composed and recommended for adoption

worldwide standards for international communications. Recently changed to the International Telecommunications Union Telecommunications Standards Sector (ITU-TSS).

CPM
Cross Phase Modulation (same as XPM)

CR
Critical (alarm)

Craft Interface Terminal (CIT)
The user interface terminal that meets OLS minimum requirements and is used by craft personnel to communicate with a network element.

Craft Interface Terminal - Personal Computer (CIT- PC)
A personal computer that meets OLS minimum requirements and is used by craft personnel to communicate with a network element.

CRC
Cyclic Redundancy Check

Critical (CR)
Alarm that indicates a severe, service-affecting condition.

CS&O
Lucent Technologies Customer Support and Operations

CTAM
Customer Technical Assistance Management

CTNEQPT
Facility/circuit interconnection equipment failure. This condition type is for internal optical LOS defects (fiber connections) between CPs.

Current Value
The value currently assigned to a provisionable parameter.

CV
Coding Violation

CVS
Coding Violation Count - Section Near End

Cyclic Redundancy Check (CRC)
A method of error detection using cyclic redundancy code. A CRC value is generated at the transmitting terminal, based on the contents of the message transmitted. An identical CRC

generation is performed at the receiving terminal and if it does not match, the message was received incorrectly.

D

Data
A collection of system parameters and their associated values.

Data Communication Network (DCN)
The Data Communication Network (DCN) supports communications between WaveStar® OLS 1.6T and the network management system (SNMS). OSI based networks, formed by Q-LAN and SDL overhead bytes, performs the communications between the SNMSs and the manages NEs (OLS).

Data Communications Channel (DCC)
The embedded overhead communications channel in the synchronous line, used for end-to-end communications and maintenance. The DCC carries alarm, control, and status information between network elements in a synchronous network.

Data Communications Equipment (DCE)
The equipment that provides the signal conversion and coding between the data terminating equipment and the line. The DCE may be separate equipment or a part of the data terminating equipment.

Data Terminating Equipment (DTE)
The equipment that originates data for transmission and accepts transmitted data.

dB
Decibels

dBm
Decibels relative to 1 milli-watt

DCC
Data Communications Channel

DCE
Data Communications Equipment

DCM
Dispersion Compensation Module

DCN
Data Communication Network

DCN
Refer to Data Communication Network

Dedicated Protection Ring (DP-Ring)
A protection method used in ISM Network Elements.

Default
An operation or value that the system or application assumes, unless a user makes an explicit choice.

Demultiplexer
A device that splits a combined signal into individual signals at the receiver end of transmission.

Demultiplexing
A process applied to a multiplexed signal for recovering signals combined within it and for restoring the distinct individual channels of these signals.

Dense Wavelength Division Multiplexing (DWDM)
Transmitting two or more signals of different wavelengths simultaneously over a single fiber.

Designated Router
Function of the IS-IS protocol. A Pseudo or Virtual node on the LAN subnet, which assumes much of the routing tasks for the LAN circuit. One of the physical nodes does the actual work. This node is the Designated Router (DR). Election of the DR depends first on the circuit priority and second on the SID (or MAC address).

Designated Router Priority
The routing priority level assigned to a node. The value of this parameter is used for the selection of the designated router per area on a LAN. The node with the highest priority will fulfill the designated router function. If two nodes that the same priority level, then the SID (MAC address) is used to select a designated router.

DFB
Distributed Feed Back

Digital Link
A transmission span such as a point-to-point 2 Mb/s, 34 Mb/s, 140 Mb/s, VC12, VC3 or VC4 link between controlled network elements. The channels within a digital link are insignificant.

Digital Multiplexer
Equipment that combines several digital signals into a single composite digital signal by time-division multiplexing.

Directory Service Network Element (DS-NE)
A designated network element that is responsible for administering a database that maps network element names (TIDs) to addresses [NSAPs (network service access points). There can be one DS-NE per ring.

Directory System Agent (DSA)
The Directory System Agent maintains the directory database and accesses the directory database on behalf of the requesting directory user agent; resides on SNMS.

Dispersion
The phenomenon in which different wavelengths or different polarizations of light travel at different speeds through a fiber optic cable.

Dispersion Compensation Fiber (DCF)
A special fiber with high negative value of dispersion. It is used as an inline pre- or post-equalization in the form of a fiber spool placed at the end of a link.

Dispersion Compensation Module (DCM)
The Dispersion Compensating Module (DCM) is used to overcome chromatic dispersion limits of the transmission fiber. The DCM is a passive module containing dispersion compensation fiber that offsets the outside fiber plant.

Dispersion Shifted Fiber
Optical fiber that uses a different internal configuration, which changes the chromtic dispersion point to 1330/1550 nm minimum dispersion wavelength.

Divergence
When the OA provides unequal amplification of incoming wavelengths, the result is a power divergence between wavelengths.

DLP
Detail Level Procedure

Domain
A set of OLS nodes/entities that are interconnected to perform some specific function in a network (for example, manager-domain where all nodes are managed by the same manager or group of managers.)

Doping
The addition of impurities to a substance in order to attain desired properties.

DRAM
Dynamic Random Access Memory

Drop Side Signal
An optical signal suitable for transmission over OLS.

DS-NE
Directory Service Network Element

DS3
Digital Signal Level 3 (44.736 Mb/s)

DSA
Refer to Directory System Agent.

DSF
Dispersion Shifted Fiber

DTE
Data Terminating Equipment

Dual Ring Interworking
A configuration of two ring networks that share two common nodes. DRI permits a circuit with one termination in one ring and one termination in another ring to survive a loss-of-signal failure of the shared node that is currently carrying service for the circuit.

DWDM
Dense Wavelength Division Multiplexing

Dynamic Random Access Memory (DRAM)
RAM which requires electronic refresh cycles every few milliseconds to preserve its data.

Dynamic Routing on a LAN
No pre-defined ethernet address is used for routing from SNMS to a managed NE. The IS on the LAN that receives the messages will notify the ES (SNMS) when a better route is available.

E

ECI
Equipment Catalog Item

EDFA
Erbium Doped Fiber Amplifier

EEPROM
Electrically Erasable Programmable Read-Only Memory

EI
External Interface

Electrical Carrier Level- 1 (EC-1)
An STS-1 signal that has been shaped and encoded for transmission over electrical media.

Electromagnetic Compatibility (EMC)
A measure of equipment tolerance to external electromagnetic fields.

Electromagnetic Interference (EMI)
High-energy, electrically induced magnetic fields that cause data corruption in cables passing through the fields.

Electromagnetic Spectrum
The different wavelengths of light in the visible spectrum (light the human eye can see), that appear as different colors.

Electronic Industries Association (EIA)
A trade association of the electronic industry that establishes electrical and functional standards.

Electrostatic Discharge (ESD)
Static electrical energy potentially harmful to circuit packs and humans.

EMC
Electromagnetic Compatibility

EMI
Electromagnetic Interference

EML
Electro-absorption Modulated Laser

End Terminal
The OLS equipment that terminates up to eighty (80) optical line signals.

Engineering Rules
A set of rules that determine OLS system configuration possibilities based on fiber type. OA, rate and number of wavelengths. These rules determine the maximum loss per span that can be tolerated, the maximum distance between spans allowed and the maximum number of spans that can be supported.

EOL
End Of Life

Erbium
A soft rare earth element used in metallurgy and nuclear research.

Erbium Doped Fiber Amplifier (EDFA)
An amplifier that performs by having a light signal pass through a section of erbium- doped fiber and using the laser pump diode to amplify the signal.

Errored Seconds (ES)
A performance monitoring parameter.

ES
Errored Seconds

ESD
Electrostatic Discharge

ESS
Errored Second Count - Section Near End

ET
End Terminal

Event
1. A fault, inconsistency, or communication problem. 2. An autonomous message put out by the system to indicate that a fault or inconsistency has occurred; messages appear in a craft interface window as they occur and can indicate trouble or be solely informational.

F

Failures in Time (FIT)
Circuit pack failure rates per 10^9 hours as calculated using the method described in ***Reliability*** Prediction Procedure for Electronic Equipment, Issue 4, September 1992.

Far End (FE)
Any other network element in a maintenance subnetwork other than the one the user is at or working on. Also called remote.

Far-End Receive Failure (FERF)
An indication returned to a transmitting Network Element that the receiving Network Element has detected an incoming section failure. Also known as RDI (Remote Detect Indication).

Far-End-Block Error (FEBE)
An indication returned to the transmitting terminal that an errored block has been detected at the receiving terminal. A block is a specified grouping of bits.

Fault
Term used when a circuit pack has a hard (not temporary) failure and cannot perform its normal function.

Fault Management
Collecting, processing, and forwarding of autonomous messages from network elements.

FDI
Forward Defect Indicator

FEBE
Far-End-Block Error

FEC
Forward Error Correction

FERF
Far End Receive Failure. See RDI.

FIT
Failures in Time

Forward Error Correction (FEC)
A technique used for error detection and correction in which the transmitting host computer includes some number of redundant bits in the payload (data field) of a block or frame of data. The receiving device uses those bits to detect, isolate and correct any errors created in transmission. FEC avoids having to retransmit information which incurred errors in network transit.

Frequency
The frequency of a wave indicates how frequently it cycles or changes. It is the number of cycles per one second intervals. Frequency is usually measured in Hertz.

FTP
file transfer protocol

FWM
Four Wave Mixing

G

Gateway Network Element (GNE)
A Gateway Network Element (GNE) is a WaveStar® OLS 1.6T node that has a physical attachment to the SNMS to support the access of the remote Network Elements. The number of remote NEs a GNE can serve is specified in terms of the number of OSI stack associations the GNE can support without running out of local resources.

GB
gigabyte

Gb/s
Gigabits per second

GHz
Gigahertz

GNE
Gateway Network Element

GUI
Graphical User Interface

H

High Speed Broadband (HSBB) Optical Translator Unit
The High Speed Broadband Optical Translator Unit (HSBB OTU) translates incoming wavelengths into those compatible with the OLS 400G. The HSBB OTU is capable of handling SONET/SDH and other asynchronous optical signals within the broadband range.

Hop
Span across a LAN or between Nodes, such as from an End Terminal to a Repeater, or from Repeater to Repeater.

HSBB
High Speed Broadband

Hz
Hertz

I

IAOLAN
IntrAOffice Local Area Network

IEC
International Electrotechnology Commission or Interexchange Carrier

In-Service (IS)
A memory administrative state for ports. IS refers to a port that is fully monitored and alarmed.

Intermediate System
A node in the OLS network that performs the router and forwarding function. An OLS node behaves both as an ES as well as an IS node.

Intermediate System to Intermediate System (IS-IS)
IS-IS is a routing exchange protocol (OSI Network Layer Routing Protocol).

IR
Intermediate Reach

IS
In Service

IS Level 1
All nodes in a single Area use IS-IS Level 1 OSI routing protocol for routing traffic.

IS Level 2
IS-IS protocol is provisioned when the number of OLS nodes has exceeded the maximum level of nodes that can be managed and the nodes are separated into Areas. IS Level 2 is used for communication between Areas. IS Level 2 protocol works only between OLS nodes that are designated as Level 2 nodes.

IS-IS
Intermediate System to Intermediate System

ITCO
Independent Telephone Company

ITU-T
International Telecommunications Union–Telecommunications

IXC
Interexchange Carrier

IXL
Index List

J

Jitter
Jitter is defined as short-term variations of the significant instants of a digital signal from their ideal positions in time.

K

Kb/s
Kilobits per second

km
kilometer

Krypton line
1547.82 nm —wavelength used in a standard laser source.

L

LAN
Local Area Network

LBC
Laser bias current

LBC-P
Laser Bias Current for Pump

LBC-SU
Laser Bias Current - Supervisory

LBFC
Laser backface currents

LBFC-P
Laser Backface Current for Pump

LBO
Lightguide Build-Out

LC
Lucent - made connector, 0.1 dB typical loss

Lead time
The amount of time that passes between placement of a product order and receipt of the product.

LEC
Local exchange carrier

LED
Light-emitting diode

Level 1 Node
A Level 1 Node has the capability of communicating with all Level 1 Nodes in the Area of which it is a member. Level 1 Nodes cannot communicate with nodes outside of its own area. The Node can be an external router or an OLS 400G.

Level 1 Ring
A Level 1 Ring is composed of only Level 1 Nodes. A Level 2 Node performing as both a Level 2 Node and a Level 1 Node can be part of the Level 1 Ring.

Level 2 Node
A Level 2 Node can communicate with other Level 2 Nodes in its subdomain. This provides the ability for communications between Areas via the Level 2 Nodes. In addition, the Level 2 Node communicates with the Level 1 Nodes in its Area. The Node can be an external router or OLS 400G.

Level 2 Ring
A set of Level 2 Nodes located within the same routing domain that connects all areas of the OLS network.

Level 2 Subdomain
A set of Level 2 Nodes located within the same routing domain that connects all areas of the OLS network.

LFA
Loss of Frame Assignment

LGX
Lightguide cross-connect.

Lightguide Build-Out (LBO)
An adapter for the lightguide fiber jumpers between the LGX, OLS, and OT equipment. It is also used on equipment within the network element. It performs signal attenuation and guarantees the proper signal level to OLS and OT equipment.

Line
1. An optical transmission line. In T1/Bellcore terminology, ″line″ refers to a transmission medium, together with the associated high speed equipment, required to provide the means of transporting information between two consecutive network elements; one originates the line signal while the other terminates it. ***2.*** ″Line″ also indicates a fiber pair. When used in this document, the following is assumed: 1 line = 2 fibers, 4 line = 8 fibers.

Line Build-out (LBO)
An attenuator placed between a Lightwave system and the LGX (equivalent.) It guarantees the optical level will be below the receiving equipment's maximum received power requirements.

LIU
Line Interface Unit

Local Area Network (LAN)
A communications network that covers a limited geographic area, is privately owned and user administered, is mostly used for internal transfer of information within a business, is normally contained within a single building or adjacent group of buildings, and transmits data at a very rapid speed.

Local Traffic
All wavelengths being added/dropped through LCTs or OTs at a WAD site.

LOF
Loss of Frame

Long Reach (LR)
A standard for optics, concerning transmitters and receivers in a system and ensuring that transmission can be maintained for long distances (tens of kilometers). This standard constrains the output power of the transmitter and the sensitivity of the receiver for long-haul applications (up to 80 km) without the need for regeneration.

LOS
Loss of Signal

Loss Budget
Loss (in dB) of optical power due to the span transmission medium (includes fiber loss and splice losses).

Loss of Frame (LOF)
A failure to synchronize to an incoming signal.

Loss of Pointer (LOP)
A failure to extract good data from a signal payload.

Loss of Signal (LOS)
The complete absence of an incoming signal.

Low Speed Broadband (LSBB) Optical Translator Unit
The Low Speed Broadband (LSBB) Optical Translator Unit (OTU20) consists of two independent optical translators each operating at bit rates from 45 Mb/s to 750 Mb/s. The OTU receives two compatible optical signals between 1300 nm and 1565 nm, and converts them into electrical signals, which are then amplified and regenerated. These electrical signals are then converted back into optical signals and are transmitted in the 1550 nm band.

LSBB
Low Speed Broadband

M

Maintenance Subnetwork
A group of network elements that are connected either in an open ring with an End Terminal at each end, or a closed ring via an optical supervisory data link. A network topology map of the maintenance subnetwork can be generated via any one of the network elements in the local transmission ring.

Menu
A set of possible values for a parameter.

MHz
megahertz

MJ
Major (alarm)

mm
Micrometer

MN
Minor (alarm)

Mode
A discrete optical wave that can propagate through a fiber.

MTBF
Mean Time Between Failures

MTBMA
Mean Time Between Maintenance Activities

Multimode Fiber (MMF)
A fiber with a core (the glass center of the fiber which light travels through) larger than Single Mode Fiber so that more than one wave can pass through it. It is primarily deployed for short distances.

Multiplexing
The process of combining several distinct digital signals into a single composite digital signal.

MZ
Mach-Zender

N

NA
Not Alarmed

NE
Network Element

NE ACTY
Near-End Activity

NEBS
Network Equipment-Building System

Network Element (NE)
A node in a telecommunication network that supports network transport services and is directly manageable by a management system.

Network Monitoring and Analysis (NMA)
An operations system designed by Telcordia which is used to monitor network facilities.

Network Service Access Point Address (NSAP Address)
An automatically assigned number that uniquely identifies a Network Element for the purposes of routing DCC messages.

NG-OLS
Next Generation Optical Line System

nm
Nanometer (10-***9*** meters)

NMA
Network Monitoring and Analysis System

NMON
Not Monitored

Node
An End System and/or Intermediate System in a DCN. Examples of Lucent Nodes are OLS 400G and SNMS.

Non-revertive switching
In non-revertive switching, a working and stand-by line exist on the network. When a protection switch occurs, the standby line is selected to support traffic, thereby becoming the working line. The original working line then becomes the stand-by line. This status remains in effect even when the fault clears. That is, there is no automatic switch back to the original status.

Not Monitored (NMON)
A memory administrative state for ports.

NR
Not Reported

NRZ
Non-return to zero

NSA
Nonservice Affecting

NSAP Address
Network Service Access Point Address

NTP
Non-Trouble Procedure

NZDSF
Non-Zero Dispersion Shifted Fiber

O

O&M
Operation and Maintenance

OA
Optical Amplifier

OALAN
Overhead Access Local Area Network

OAM&P
Operation, Administration, Maintenance, and Provisioning

OC, OC-n
Optical Carrier

OCAIM
optical channel alarm indication message

OCHAN
Optical Channel

ODU
Optical Demultiplexer

OLS
Optical Line System

OMON
Optical Monitoring Circuit

OMU
Optical Multiplexer Unit

OOF
Out-of-Frame

OOS
Out-of-Service

OOS-MA-AS
A provisioning state for ports. It is not an acronym, an abbreviation, or a shortened form of anything. It is always written in capital letters.

Open Ring Network
Network formed of a point-to-point configuration of systems.

Open System Interconnection Data Communication Network (OSI DCN)
based on the OSI 7-Layer protocol for transfer of data between systems.

Open Systems Interconnection (OSI)
Referring to the OSI reference model, a logical structure for network operations standardized by the International Standards Organization (ISO).

Operations Interface
Any interface providing you with information on the system behavior or control. These include the equipment LEDs, interface strip, CIT, office alarms, and all telemetry interfaces.

Operations Interworking
The capability to access, operate, provision, and administer remote systems through craft interface access from any site in a SONET network or from a centralized operations system.

Operations System (OS)
A central computer-based system used to provide operations, administration, and maintenance functions.

OPR
Optical Power Received - Optics

OPT
Optical Power Transmitted - Optics

Optical Amplifier (OA)
The Optical Amplifier operates in the 1530 nm to 1563 nm band (191.850 THz - 195.900 THz range), and provides a uniform gain for up to 80 channels.

Optical Carrier (OC, OC-n)
The optical signal that results from an optical conversion of an STS signal; that is, OC-1 from STS-1 and OC-n from STS-n.

Optical Carrier 12/Synchronous Transport Module 4 (OC12/STM4)
The OC12/STM4 port unit provides a bidirectional port at the OC-12 rate.

Optical Carrier 192/Synchronous Transport Module 64 (OC192/STM64)
The OC192/STM64 port unit provides a bidirectional port which is provisionable at either the OC-192- or STM-64-rate.

Optical Carrier 48/Synchronous Transport Module 16 (OC48/STM16)
The OC48/STM16 port unit provides a bidirectional port which is provisionable at either the OC-48- or STM-16-rate.

Optical Channel (OCHAN)
An OC-N/STM-N wavelength within an optical line signal. Multiple channels, differing by 1.5***m*** in wavelength, are multiplexed into one signal.

Optical Demultiplexer (ODU)
An ODU takes the OLS optical signal and separates it into its component signals; up to eighty (80) discrete signals may be extracted.

Optical Line ID
A portion of the supervisory signal that identifies optical lines to prevent wrong connections between sites.

Optical Line Signal
A multiplexed optical signal containing eight wavelengths or channels.

Optical Line System (OLS)
A lightwave transmission system that can multiplex up 8, 16, 80 or more wavelengths, transmit the resulting multiplexed signal, and then demultiplex the signal at the other end.

Optical Line System (OLS) End Terminal
Terminal equipment consisting of a co-located Optical Multiplexer Unit (OMU) and Optical Demultiplexer Unit (ODU) for bidirectional transmission, Optical Amplifiers (OA), and OLS Telemetry packs.

Optical Line System (OLS) Repeater Terminal
Bidirectional terminal consisting of a pair of Optical Amplifiers (OA) and the corresponding OLS telemetry packs.

Optical Line System (OLS) Subnetwork
All dual-facing end terminals and OLS Repeaters interconnected with each other. The dual-facing shelf feature extends the access domain beyond the end terminals.

Optical Monitoring Circuit (OMON)
The OMON determines the number of channels (wavelengths) present in the WaveStar® OLS 1.6T System, and the output power of each channel present.

Optical Multiplexer Unit (OMU)
An OMU takes up to 80 Low Speed Broadband (LSBB), High Speed Broadband (HSBB), or ***OC-48***/STM-16 signals and combines them into a single signal.

Optical Section
Refer to ***Span***.

Optical Translator Unit (OTU)
OTUs translate incoming optical signals to wavelengths compatible with OLS.

Optical WAD
Refer to ***Wavelength Add/Drop***.

Orderwire
A section of the supervisory signal that is used for communication between sites.

Original Value Provisioning
The original values are preprogrammed at the factory. These values can be overridden using local or remote provisioning.

OS
Operations System

OSI
Open System Interface

OSI DCN
Open System Interconnection Data Communication Network

OSNR
Optical Signal to Noise Ratio

OSNR-C
Optical Signal to Noise Ratio - Channel

OSS
Operations Support System

OT
Optical Translator

OTCTL
Optical Translator Controller

OTPM
Optical Translator Port Module

OTU
Optical Translator Unit

Out-of-Service (OOS)
The circuit pack is not providing its normal service function (removed from either the working or protection state) either because of a system problem or because the pack has been removed from service.

Outage
A disruption of service that lasts for more than 1 second.

Overhead Access Local Area Network (OALAN)
The internal local area network that provides communications between the System Controller circuit pack and the Overhead Controller circuit pack.

OW
OrderWire

P

Parameter
A variable that is given a value for a specified application. A constant, variable, or expression that is used to pass values between components.

Parity Check
Tests whether the number of ones (or zeros) in an array of binary bits is odd or even; used to determine that the received signal is the same as the transmitted signal.

Path Overhead (POH)
Overhead assigned to and transported with the payload until the payload is demultiplexed. It is used for functions that are necessary to transport the payload.

PC
standard-type connector, 0.3 dB typical loss

PCM
Pulse Code Modulation

Performance Monitoring (PM)
Measures the quality of service and identifies any degrading or marginally operating systems (before an alarm would be generated).

PID
Private Identifier (Password)

PIN
A type of photodiode.

Platform
In OLS, a platform is a family of equipment and software configurations designed to support a particular application.

Plesiochronous
Refers to network elements involved in multiple digital synchronous circuits running at different clock rates.

PM
Performance Monitoring

POH
Path Overhead

Port
A system interface for transmission, as input, output, or bidirectional.

PRD
Product Requirements Document

Private Identifier (PID)
Password

Proactive Maintenance
Refers to the process of detecting degrading conditions not severe enough to initiate protection switching or alarming, but indicative of an impending signal fail or signal degrade defect.

Protection Switching
The switching of traffic from a malfunctioning line to one that is working.

PROTN
Protection

Provisioning
Assigning a value to a system parameter.

Pump Laser Efficiency (PLE)
The PLE provides an indication of the level of performance of pump lasers of the OA.

PWR
Power

Q

QOS
Quality of Service

R

RCV
Receive

RDI
Remote defect indicator

Reactive Maintenance
Refers to discovering defects/failures and then clearing them.

Regeneration
The process of reconstructing a digital signal to eliminate the effects of noise and distortion.

Remote defect indicator (RDI)
Previously called far-end-receive failure (FERF), an indication returned to a transmitting terminal that the receiving terminal has detected an incoming section failure.

Remote failure indication (RFI)
Previously called yellow signals, a signal that alerts upstream STS-1 path terminating equipment that a down stream failure has been alarmed along the STS-1 path. This action prevents multiple alarms from being activated for the same failure and ensures that craft will be dispatched to the correct location of the failure.

Repeater
A repeater is an optical device that receives an optical signal, amplifies it and re-transmits it.

Repeater Terminal
In OLS, a bidirectional terminal consisting of a pair of optical amplifiers and the corresponding telemetry packs.

RF
Radio Frequency

RFI
Remote failure indication

Ring
A series of nodes connected in a ″ring″ topology so that if there is a failure of a node or a link, traffic can be routed in the opposite direction of the failure and reach all nodes on the ring.

RM ACTY
Remote Activity

Router
An interface between two networks. While routers are like bridges, they work differently. Routers provide more functionality than bridges. For example, they can find the best route between any two networks, even if there are several different networks in between. Routers also provide network management capabilities such as load balancing, partitioning of the network, and trouble-shooting.

Routing Domain
A collection of End Systems and Intermediate Systems which operate according to the same routing procedures and which is operated by a single administrative authority.

RPP
Reliability Prediction Procedure

RT
Remote Terminal

RTAC
Regional Technical Assistance Center

Rx
receive

S

SA
Service Affecting

SBS
Stimulated Brillouin Scattering

SC U-LBO
SC Universal Line-Build-Out

SD
Signal Degrade

SDH
Synchronous Digital Hierarchy

SDL
Supervisory Data Link

Section Overhead (SOH)
Capacity added to either an AU-4 or assembly of AU-3s to create an STM-1. Contains always STM-1 framing and optionally maintenance and operational functions. SOH can be subdivided in MSOH (multiplex section overhead) and RSOH (regenerator section overhead).

SEFS
Severely Errored Frame Seconds

SEL
NSAP Selector is used to differentiate multiple access points (NSAPs) for the same network element whose network name is the Network Entity Title.

SES
Severely Errored Seconds

SESP
P-bit Severely Errored Seconds

Severely Errored Frame Seconds (SEFS)
A performance-monitoring parameter.

Severely Errored Seconds (SES)
This performance monitoring parameter is a second in which a signal failure occurs, or more than a preset amount of coding violations (dependent on the type of signal) occur.

Severely Errored Seconds - P-bit (SESP)
A performance-monitoring parameter.

SF
Signal Fail

SID
System Identifier

Signal to Noise ratio (SNR)
The relative strength of signal compared to noise.

Single Mode Fiber (SMF)
A fiber that has a core (the glass center of the fiber which light travels through) which is small enough so that only one wave can pass through it. This is the only fiber used for long distance optical communication.

Single-ended Operations
The single-ended operations capability provides operations support from a single location to remote network elements (NEs) in the same SONET subnetwork. With this capability you can perform operations, administration, maintenance, and provisioning on a centralized basis. The remote NEs can be those that are specified for the current release.

Site Address
The unique address for each regenerator or terminal in a repeater span.

SNMS
Subnetwork Management System.

SNR
Signal to Noise ratio

SNR-C
Signal-to-Noise Ratio-Optical Channel

SONET
Synchronous Optical Network

Span
An uninterrupted bidirectional fiber section between two network elements. Spans can be measured in distance (Kilometers) or in the amount of loss that exists in the span (dB).

Span Growth
A type of growth in which one wavelength is added to all lines before the next wavelength is added.

Span Loss
Loss (in dB) of optical power due to the span transmission medium (includes fiber loss and splice losses).

SPE
Synchronous Payload Envelope

SPM
Self Phase Modulation

SPR-C
Signal Power Received - Optical Channel

SPR-P
Signal power - Pilot Channel

SPR-SU
Signal Power Received - Supervisory

SPT-C
Signal Power Transmitted - Optical Channel

SPT-SU
Signal power Transmitted - Supervisory

SSMF
Standard Single Mode Fiber

ST
standard-type connector, 0.3dB typical loss

STM-n
Synchronous Transport Module level n

STS, STS-n
Synchronous Transport Signal

Subnetwork
A collection of nodes connected by a single transmission medium.

Subnetwork Management System (SNMS)
An element management system that supports various WaveStar® OLS 1.6T Network Elements.

Supervisory Signal
An optical signal originating with the telemetry circuit pack that is used to communicate maintenance information.

Suppression
A process where service-affecting alarms that have been identified as an ″effect″ are not displayed to a user.

SUPVY
Supervisory

Synchronous
Network elements that are timed from references traceable to a single Stratum-1 source.

Synchronous Digital Hierarchy (SDH)
A family of digital transmission rates from 51.84 Mb/s to 9.953 Gb/s that allows the interconnection of transmission products around the world.

Synchronous Network
The synchronization of transmission systems with payloads to a master (network clock that can be traced to a single reference clock).

Synchronous Optical Network (SONET)
A family of fiber optic transmission rates from 51.84 Mb/s to 13.22 Gb/s that allows the interworking of transmission products from multiple vendors.

Synchronous Payload Envelope (SPE)
A 125-microsecond frame structure composed of STS path overhead and bandwidth for the payload.

Synchronous Transfer Mode (STM)
Transport and switching method that depends on information occurring in regular and fixed patterns.

Synchronous Transport Signal (STS, STS-n)
The basic logical building block signal with a rate of 51.840 Mb/s for an STS-1 signal and a rate of n times 51.840 Mb/s for an STS-n signal.

System Controller (SYSCTL)
System Controllers are the central processing unit of a system.

System Identifier (SID)
Part of NSAP used for intra-Area routing to the destination Node in the destination Area when the Area address part is the address for that Area.

System Memory (SYSMEM)
SYSMEM is where the system software is stored.

T

T1X1 and T1M1
The ANSI committees responsible for telecommunications standards.

TA
Technical Advisory

TABS
Telemetry Asynchronous Byte Serial (Protocol)

TAP
Trouble Analysis Procedure

Target Identifier (TID)
A provisionable parameter used to identify an FT-2000 ***OC-48/STM-16*** Lightwave network element. Typically, the TID is the common language location identifier (CLLI™) of the FT-2000 1x1 End Terminal, FT-2000 Add/Drop-Rings Terminal, and FT-2000 Repeater Bays.

TCA
Threshold-Crossing Alert

TCP/IP
Transmission Control Protocol/Internet Protocol

TDM
time division multiplexing

Threshold-Crossing Alert (TCA)
A condition set when a counter exceeds a user-selected high or low threshold. A TCA does not generate an alarm but is available on demand through the CIT.

THz
Terahertz (10^{12} Hz)

TID
Target Identifier

Time Division Multiplexing (TDM)
The process of combining a number of lower speed lines into a higher speed line by allocating a short piece of time to each signal.

TL1
Transaction Language 1

TOD
Time of Day

TOP
Task Oriented Practice

TOP
Task Oriented Procedure

TOPR-OL
Total Power Received - Optical Line

TOPT-OL
Total Power Transmitted - Optical Line

Transaction Language 1 (TL1)
A machine-to-machine communications language that is a subset of CCITT's human-machine language.

Transmission Control Protocol/Internet Protocol (TCP/IP)
A networking protocol that provides communication across interconnected networks between computers with diverse hardware architectures and various operating systems.

Transport Service Bridge (TSB)
Used internally by an NE to provide direct connectivity with the SNMS via the TCP/IP network to exchange network operation and management information. OLS 400G supports an internal RFC 100g TSB function between OS(s) and NEs for customers that wish to use a TCP/IP network for transporting OSI application messages.

TrueWave® Fiber
Non–zero dispersion-shifted fiber manufactured by Lucent Technologies (previously referred to as DEB fiber).

TSB
Transport Service Bridge

Tx
Transmit

U

UAS
Unavailable Seconds

UBob
universal build out block

Unavailable Seconds (UAS)
In performance monitoring, the count of seconds in which a signal is declared failed or in which 10 consecutively severely errored seconds (SES) occurred, until the time when 10 consecutive non-SES occur.

Upgrade
An upgrade is the addition of new capabilities (features). This requires new software and may require new hardware.

V

Value
A number, text string, or other menu selection associated with a parameter.

VOA
Variable Optical Attenuator

W **WAD**
Wavelength Add/Drop

Wave Division Multiplexing (WDM)
WDM merges optical traffic onto one common fiber. It allows high flexibility in expanding bandwidth. It reduces costly mux/demux function, and reuses existing optical signals.

Wavelength
A wavelength is the length of a single wave (measured from crest to crest or trough to trough, for example) or the distance a wave travels in the time it takes to complete one cycle. Wavelengths are usually expressed in micrometers (mm) or nanometers (nm). Wavelength is often abbreviated by the Greek symbol lamda (l).

Wavelength Add/Drop (WAD)
The process of adding and dropping wavelengths to provide more efficient transmission. For example, a central office contains two or more OLS end terminals, some wavelengths can be added and dropped locally while others go express between the end terminals by means of OTs.

Wavelength Blocking
At a WA/D site with branching, if a wavelength goes express between two co-located OLS end terminals, that wavelength can only be added or dropped at the third co-located end terminal. Wavelength interchange permits the wavelength on the third end terminal to be converted into an available wavelength at the other two end terminals.

Wavelength Growth
A type of growth in which all eight wavelengths are added to a single line before more lines are added.

Waves
A wave is an oscillation or movement that transfers energy from point to point. Mathematically, it is described in terms of its frequency, amplitude, and velocity; and it can be visualized as a moving swell or succession of curves.

WaveWrapper
The Lucent proprietary format of transporting optical channels. The WaveWrapper format raises the bit rate by factor of 15/14 and adds optical channel overhead and FEC check bytes.

Wideband Communications
Voice, data, and/or video communications at digital rates from DS0 to DS1 rates (64Kb/s to 1544Kb/s)

X **XPM**

Cross Phase Modulation (same as CPM)

Z **ZDW**

Zero dispersion wavelength

Zero Dispersion Shifted Fiber (DSF)

DSF where the zero dispersion point is shifted from 1310nm to 1550 nm. It is best suited for applications involving single channel transmission at 1550 nm, providing the benefits of zero dispersion as well as taking advantage of the lower attentuation wavelength.

Index

Numerics

2-Fiber 4-Channel WAD Type 2 Applications, 4-5

2-Fiber Bay Configurations, 6-8

2-Fiber Repeater Bay Power Distribution

Functional Block Diagram, 3-51

2-Fiber Repeater Shelf

Power Distribution, 3-51

50 GHz Spacing Channel Allocation, A-2, A-5, A-11

A

Airflow Alarm, 2-16

Alarm Provisioning, 2-16

Applications, 4-2

2-Fiber 4-Channel WAD, Type 2, 4-5

For Through OTUs, 4-4

Point-to-Point with Repeaters, 4-3

Ring, 4-6

Assignment

OTU, 6-5

B

Bay Configurations, 6-8

Bay Types, 6-3

Bay, Overhead, and System (BOS)

Front Panel, 3-42

Functional Block Diagram, 3-41

Functionality of, 3-41

Bay, Overhead, and System Circuit Pack, 1-7

Bays

Complementary, 6-21

Growth, 6-24

Bays, List of, 6-3

Benefits of Product, 1-4

Byte Monitoring, B1, 2-17

Byte Section Trace Identifier, J0, 2-17

C

Cabinet

ETSI Seismic, 6-28

Capacity of Product, 1-4

Channel Alarm Indication, Optical, 2-16

Channel Plans, 5-44

Channel Spacing, A-2, A-5, A-11

Channel Trace via WaveWrapper, 2-9

Circuit Packs

DC-to-DC Converters, 3-46

In-Line Fuses, 3-52

Line Conditioning, 3-52

Low Voltage Cutoff, 3-52

Power Distribution, 3-52

Power Supply, 3-52

CIT, WaveStar, 2-11

Clock and Data Recovery (CDR), 3-14

Complementary Bay, 6-21

Functional Block Diagram, 3-49

Power Distribution, 3-49

Components of System, 1-6

Concatenating Systems, 5-56

Configurations

Bay, 6-8

Connectors

LC, 7-3

Control Circuit Packs, 3-6

D Data Communications Networks, 5-58

Data Sheets

ETSI Seismic Cabinet, 6-28

Database, 2-16

DCN Parameter Specifications, 5-61

Dispersion Compensation, 7-63, 7-64

Dispersion Compensation Module, 1-7

E EMS, Interface, 2-13

End Terminal, 3-8

Engineering Rules, 5-3, 5-3

Corning E-LEAF, 5-19

Corning LEAF, 5-22

Corning LS, 5-24

Dispersion Shifted Fiber, 5-26

General Information, 5-63

General Notes, 5-4

IS-IS Areas for Level 2 Routing, 5-79

Network Partitioning, 5-67

SSMF, 5-7

TrueWave Classic, 5-15

TrueWave Plus, 5-17

TrueWave RS, 5-12

ETSI Seismic Cabinet, 6-28

External Interface, 1-7

External Interface (EI), 3-43

Front Panel, 3-44

Functional Block Diagram of, 3-43

Operation of, 3-44

F Fault Recovery, Automatic, 2-16

Features Overview, 2-2

Features, Standard

Additional Capabilities, 2-5, 2-13

APSD, 2-3

CIT, 2-3

In Service Software Upgrades (ISUG), 2-4

LambdaRouter AIS Response Enhancements, 2-4

OA3L, 2-3

SDH PM, 2-4

Fiber Types Supported, 5-3

Flexibility of Product, 1-4

Floor Plan, 6-17

Front Panel

of ODU, 3-27, 3-28

of OMON, 3-36

of SUPVY, 3-40

of WAD, 3-25

Full Add/Drop Ring Terminal

Description of, 3-9, 3-9

Fuses, In-Line, 3-52

G Gain Tilt

Correction of, 3-35

Growth Bay, 6-24

Functional Block Diagram of, 3-50

Operation of, 3-50

Power Distribution of, 3-50

H Highlights of Release 6.0, 2-3

I

In-Line Fuses in Circuit Packs, 3-52

L Laser Safety, 1-5

LC Connectors, 7-3

Line Conditioning in Circuit Packs, 3-52

Line Rate, Optical, 7-4

Low Voltage Cut-off, 7-3

Low Voltage Cutoff in Circuit Packs, 3-52

M Maintenance Capabilities, 2-16

Miscellaneously Mounted Shelves, 6-40

Modular Design, 1-4

Modularity and Cost of Product, 1-4

N Not-in-Service Indication, Local, 2-16

O OLS Compatible Optics, 2-8

Operating Wavelength, 7-3

Optical Amplifier Monitor Port, 2-17

Optical Amplifiers (OA)

Functional Block Diagram, 3-20

Functionality of, 3-20

Optical Demultiplexer Unit (ODU)

Description of, 3-26

Front Panel, 3-27, 3-28

Functional Block Diagram, 3-26

Functionality of, 3-26

Optical Line Rate, 7-4, 7-4

Optical Monitor (OMON)

Description of, 3-35

Front Panel, 3-36

Functionality of, 3-35

Gain Tilt, 3-35

Operation of, 3-37

Optical Multiplexing Unit (OMU)

Front Panel, 3-16, 3-16, 3-18, 3-18

Types of, 3-17

Optical Reflections Tolerance, 7-3

Optical Safety Classification, 7-3

Optical Spectrum

OMU, A-2, A-5

Optical Translator Unit (OTU)

Description of, 3-13

Front Panel, 3-14

Operation of, 3-14

Optical Wavelength Add/Drop

Types of Circuit Packs, 3-23

Optical Wavelength Add/Drop (WAD)

Description of, 3-23

Front Panel of, 3-25

Functional Block Diagram, 3-24

Functionality of, 3-23

Types of Circuit Packs, 3-23

OTU Assignment, 6-5

OTUs Between Client Equipment, 5-57

P Point-to-Point with Repeaters Applications, 4-3

Power Cables, 3-47

Color Codes, 3-47

Power Distribution

Cables, 3-47

Circuit Packs, 3-52

Complementary Bay, 3-49

Filtering, 3-46

Fusing, 3-46

Growth Bay, 3-50

Overview, 3-46

System Bay, 3-48

Power Supply

Circuit Packs, 3-52

R Receive End, 3-5

Regenerator Overhead (RHSOH), 3-14

Repeater Terminal

Description of, 3-10, 3-10

Response Provisioning, OTU AIS, 2-17

Ring Applications, 4-6

S SDL Provisioning, 5-83

Security, System, 2-12

Shelves

Miscellaneously Mounted, 6-40

Signal Maintenance, 2-17

Single-Span Operations, Long, 2-8

SNMS Connections, 5-84

SSMF. Standard Single-Mode Fiber., 7-3

Standard Features, 2-5

Standard Single Mode Fiber, 5-3, 7-3

Supervisory, 1-7

Supervisory Pack (SUPVY)

Description of, 3-38

Front Panel, 3-40

Functional Block Diagram, 3-39

Functionality of, 3-38

Location of, 3-39

SUPVY Channel, 2-13

System Bay

Power Distribution, 3-48

System Block Diagram, 3-4

System Components, 1-6, 3-6

Control Circuit Packs, 3-6

OA, 1-7

OMON, 1-7

OMU;ODU, 1-7

OTU, 1-6

Terminals, 3-6

Transmission Circuit Packs, 3-6

WAD Type 2, 1-7

System Diagram, 1-6

System Overview, 1-2, 1-2

System Security, 2-12

System Specifications, 7-3

T Terminals

End, 3-8

Fixed Add/Drop Ring Terminal (WAD), 3-11

Full Add/Drop Ring Terminal, 3-9

Through OTU Applications, 4-4

Through OTUs, 2-7

Tolerance, of Optical Reflections, 7-3

Topologies, 4-2

Transmission Circuit Packs, 3-6

Transmission OTU Rates, 2-6

Transmit Direction, 3-4

U Upgrade Information, 2-3

W WAD Channel Allocations, A-14

Wavelength Growth Plan, 5-43, 5-43

Wavelength, Operating, 7-3