Lucent Technologies
Bell Labs Innovations

WaveStar® OLS 1.6T (400G/800G)

User/Service Manual (U/SM)

Release 6.1

365-575-787
Issue 1
December 2001

Lucent Technologies - Proprietary
This document contains proprietary information
of Lucent Technologies and is not to be disclosed or used
except in accordance with applicable agreements

Copyright © 2001 Lucent Technologies
Unpublished and Not for Publication
All Rights Reserved

This material is protected by the copyright and trade secret laws of the United States and other countries. It may not be reproduced, distributed, or altered in any fashion by any entity (either internal or external to Lucent Technologies), except in accordance with applicable agreements, contracts or licensing, without the express written consent of Lucent Technologies and the business management owner of the material.

For permission to reproduce or distribute, please contact:

Product Development Manager 1-888-LTINFO6 (domestic)
1-317-322-6848 (international)

Notice

The information in this document is subject to change without notice. Although every effort has been made to make this document as accurate, complete, and clear as possible, Lucent Technologies and its predecessors assume no responsibility for any errors that may appear in this document.

Mandatory customer information

Federal Communications Commission (FCC) Notification and Repair Information

NOTE: This equipment is designed to comply with the limits for a Class A digital device, pursuant to Part 15 of the FCC Rules. These limits are designed to provide reasonable protection against harmful interference when the equipment is operated in a commercial environment. This equipment generates, uses, and can radiate radio frequency energy and, if not installed and used in accordance with the instructions manual, may cause interference to radio communications. Operation of this equipment in a residence is likely to cause harmful interference, in which case the user will be required to correct the interference at his own expense.

Security statement

In rare instances, unauthorized individuals make connections to the telecommunications network. In such an event, applicable tariffs require that the customer pay all network charges for traffic. Lucent Technologies and its predecessors cannot be responsible for such charges and will not make any allowance or give any credit for charges that result from unauthorized access.

Trademarks

5ESS is a registered trademark of Lucent Technologies.

LGX is a registered trademark of Lucent Technologies.

Paradyne is a registered trademark of Lucent Technologies.

SLC is a registered trademark of Lucent Technologies.

ST is a registered trademark of Lucent Technologies.

TrueWave is a registered trademark of Lucent Technologies.

CLEI, is a trademark of Telcordia Technologies, Inc.

CLLI is a trademark of Telcordia Technologies, Inc.

CLCI is a trademark of Telcordia Technologies, Inc.

CLFI is a trademark of Telcordia Technologies, Inc.

COMMON LANGUAGE is a registered trademark of Telecordia Technologies, Inc.

CSA is a registered trademark of Canadian Standards Association

DACScan is a trademark of Lucent Technologies.

DANTEL is a registered trademark of DANTEL Incorporated

MS-DOS is a registered trademark of Microsoft Corporation

Microsoft is a registered trademark of Microsoft Corporation

Internet Explorer is a registered trademark of Microsoft Corporation

Windows 95, Windows 98, Windows 2000 is a registered trademark of Microsoft Corporation

Pentium is a registered trademark of Intel Corporation

Gateway 2000 is a registered trademark of Gateway Corporation

IBM is a registered trademark of International Business Machines Corporation

Penril is a registered trademark of Penril Corporation

ProComm Plus is a registered trademark of Datastorm Technologies Inc.

Toshiba is a registered trademark of Toshiba Technologies Inc.

UL is a registered trademark of Underwriters Laboratories Inc.

V-series is a registered trademark of Hayes Microcomputer Products, Inc.

Zenith is a registered trademark of Zenith Electronics Corporation

Limited Warranty

The terms and conditions of sale will include a one-year warranty on hardware and a 90-day warranty on software.

Ordering information

The ordering number for this document is 365-575-751. To order this document, call 1-888-LUCENT8 (1-888-582-3688) or fax 1-800-566-9568 (USA). Outside USA: For Europe, The Middle East, and Africa (EMEA) Asia, Pacific Region, and China Caribbean, Latin America (CALA), phone: 1-317-322-6416 or E-Mail: intlorders@lucent.com. For Canada, North American Region, phone: 1-317-322-6615 or E-Mail: intlnaorders@lucent.com.

Mail orders to: Lucent Technologies, Attention: Order Entry, 2855 N. Franklin Road, P.O. Box 19901, Indianapolis IN 46219. Worldwide fax: 1-317-322-6699. Web orders for commercial customers: http://www.lucentdocs.com or http://www.lucent8.com. Web orders for Lucent Associates: http://www.cic.lucent.com

Support

Technical support

Lucent Technologies Customer Technical Assistance Management (CTAM) center provides a technical assistance telephone number that is monitored 24 hours a day. Calls are routed to either the Regional Technical Assistance Center (RTAC) or Customer Technical Support (CTS). For technical assistance, call 1-800-225-4672. (International customers call 1-630-224-3672).

Information product support

Contact the Lucent Technologies at 1-888-LUCENT8 or *http://www.lucent8.com*

Lucent Technologies values your comments!

Lucent Technologies
Bell Labs Innovations

WaveStar® OLS 1.6T (400G/800G)
User/Service Manual (U/SM)
Release 6.1
365-575-787 Issue 1 December 2001

Lucent Technologies welcomes your comments on this information product. Your opinion is of great value and helps us to improve.

1. Was the information product:

	Yes	*No*	*Not applicable*
In the language of your choice?	☐	☐	☐
In the desired media (paper, CD-ROM, etc.)?	☐	☐	☐
Available when you needed it?	☐	☐	☐

Please provide any additional comments:

_____

_____

2. Please rate the effectiveness of this information product:

	Excellent	*More than satisfactory*	*Satisfactory*	*Less than satisfactory*	*Unsatisfactory*	*Not applicable*
Ease of use	☐	☐	☐	☐	☐	☐
Level of detail	☐	☐	☐	☐	☐	☐
Readability and clarity	☐	☐	☐	☐	☐	☐
Organization	☐	☐	☐	☐	☐	☐
Completeness	☐	☐	☐	☐	☐	☐
Technical accuracy	☐	☐	☐	☐	☐	☐
Quality of translation	☐	☐	☐	☐	☐	☐
Appearance	☐	☐	☐	☐	☐	☐

If your response to any of the above questions is "*Less than satisfactory*" or "*Unsatisfactory,*" please explain your rating.

_____

_____

3. If you could change one thing about this information product, what would it be?

_____

_____

4. Please write any other comments about this information product:

_____

_____

Please complete the following if we may contact you for clarification or to address your concerns:

Name: _____ Date: _____

Company/organization: _____ Telephone number: _____

Address: _____

Email address: _____ Job function: _____

If you choose to complete this form online, go to http://www.lucent-info.com/comments
Otherwise fax to 407 767 2760 (U.S.) or +1 407 767 2760 (outside the U.S.) or email comments to ctiphotline@lucent.com

Lucent Technologies values your comments!

Lucent Technologies
Bell Labs Innovations

WaveStar® OLS 1.6T (400G/800G)
User/Service Manual (U/SM)
Release 6.1
365-575-787 Issue 1 December 2001

Lucent Technologies welcomes your comments on this information product. Your opinion is of great value and helps us to improve.

1. Was the information product:

	Yes	*No*	*Not applicable*
In the language of your choice?	☐	☐	☐
In the desired media (paper, CD-ROM, etc.)?	☐	☐	☐
Available when you needed it?	☐	☐	☐

Please provide any additional comments:

_____

_____

2. Please rate the effectiveness of this information product:

	Excellent	*More than satisfactory*	*Satisfactory*	*Less than satisfactory*	*Unsatisfactory*	*Not applicable*
Ease of use	☐	☐	☐	☐	☐	☐
Level of detail	☐	☐	☐	☐	☐	☐
Readability and clarity	☐	☐	☐	☐	☐	☐
Organization	☐	☐	☐	☐	☐	☐
Completeness	☐	☐	☐	☐	☐	☐
Technical accuracy	☐	☐	☐	☐	☐	☐
Quality of translation	☐	☐	☐	☐	☐	☐
Appearance	☐	☐	☐	☐	☐	☐

If your response to any of the above questions is "*Less than satisfactory*" or "*Unsatisfactory,*" please explain your rating.

_____

_____

3. If you could change one thing about this information product, what would it be?

_____

_____

4. Please write any other comments about this information product:

_____

_____

Please complete the following if we may contact you for clarification or to address your concerns:

Name: _____ Date: _____

Company/organization: _____ Telephone number: _____

Address: _____

Email address: _____ Job function: _____

If you choose to complete this form online, go to http://www.lucent-info.com/comments
Otherwise fax to 407 767 2760 (U.S.) or +1 407 767 2760 (outside the U.S.) or email comments to ctiphotline@lucent.com

Contents

About this information product

Purpose xxiii

Reason for reissue xxiii

Safety labels xxiii

Intended audience xxiv

How to use this information product xxiv

Conventions used xxvi

Related documentation xxvi

Related training xxvii

Lightwave Safety Guidelines xxvii

Warning and Compliance Labels xxxii

Electrostatic Discharge (ESD) xxxvii

Safety Instructions xxxix

Technical Support xli

Ordering Documents xlii

How to comment xliii

1 Security Administration

Overview 1-1

Security Features 1-2

NE Security Interfaces 1-3

NE Logins 1-4

NE Original Logins 1-6

NE Passwords 1-7

NE User Login Security 1-8

NE Login Sessions 1-14

NE Login-Access Security Procedures 1-16

NE User ID Lockout 1-18

NE Intruder Alert Alarm 1-19

EMS-NE Logins 1-20

EMS-NE Security Notification Management 1-21

CIT-NE Login Security 1-22

CIT-NE Inactivity Timeout 1-23

CIT-NE Password Aging 1-24

CIT-NE User Login Aging 1-25

CIT-NE Security Data Storage 1-26

CIT-NE Audit Trail Record 1-27

EMS TL1-NE Authentication and Access Control 1-28

2 Operation Interfaces

Overview 2-1

User Interface 2-2

External Interfaces 2-4

User Panel 2-5

Power On LED 2-9

Equipment LEDs 2-10

CIT-PC Interface 2-13

Office Alarms 2-15

Miscellaneous Discrete Interfaces 2-16

TL/1 OS Interface 2-18

Orderwire 2-20

Supervisory Channel 2-21

Miscellaneous Operation 2-23

3 WaveStar® OLS 1.6T CIT

Overview 3-1

WaveStar® OLS 1.6T CIT Requirements 3-2

WaveStar® OLS 1.6T CIT Tutorial 3-4

4 Provisioning

Overview 4-1

Introduction to Provisioning 4-2

OTU Port-Provisioning 4-3

Technical Provisioning 4-5

Provisioning Interactions with Maintenance 4-6

Provisioning Guidelines 4-8

Using the CIT to Provision Circuit Connections 4-10

5 Performance Monitoring

Overview 5-1

Performance Measurements

Overview 5-3

OA Circuit Pack Performance Measurements 5-4

SUPVY Circuit Pack Performance Measurements 5-5

OC-48/STM-16 OTU (OTU1) Performance Measurements 5-6

OC-192/STM-64 with FEC OTU (OTU30) Performance Measurements 5-7

HSBB OTU (OTU40) Performance Measurements 5-8

4:1 10G Multiplex OTU (OTU70) Performance Measurements 5-9

OMON Circuit Pack Performance Measurements 5-11

Performance Data Processing

Overview 5-12

Baselining Optics 5-13

Automatic Baselining 5-14

Manual Baselining 5-16

Performance Parameters

Overview 5-18

Supported Parameters 5-19

Parameter Processing 5-24

Optical Line Signal Power Parameters 5-25

Optical Line Equipment Health Parameters 5-27

Supervisory Channel Performance Parameters 5-28

Supervisory Digital Parameters 5-29

OTU Performance Parameters 5-30

OTU Equipment Health Parameters 5-31

Section B1 Byte Digital Performance Parameters 5-32

Optical Channel Signal Power Parameters 5-33

Thresholds

Overview 5-35

Performance Parameter Thresholds 5-36

Parameter Threshold Provisioning 5-38

QOS Alarm Events 5-42

Clearing QOS Alarms 5-43

Thresholds that can not be User-Provisioned 5-44

6 Maintenance

Overview 6-1

Maintenance Signals

Overview 6-2

Keep Alive Signal 6-3

Supervisory Signal 6-4

J0 Section Trace Identifier (STI) 6-5

Optical Channel Trace for OCh10G 6-6

Integration and Timing

Overview 6-7

Alarms Delays 6-8

Equipment Failure 6-10

Fault Identification

Overview 6-11

Automatic Fault Detection 6-12

Automatic Fault Isolation and Diagnostics 6-14

Loss of Signal (LOS)

Overview 6-15

Detecting Incoming LOS at an OA 6-16

Optical Channel LOS 6-17

Control System

Overview 6-18

10BaseT — Ethernet 6-20

Port Associations

Overview 6-21

Available Associations 6-22

7 Alarms and Indicators

Overview 7-1

Alarm Mappings 7-2

Alarm Severity Assignment Profile (ASAP) 7-5

8 Automatic Power Shutdown (APSD)

Overview 8-1

APSD 8-2

Safety Requirements 8-5

APSD Trigger Conditions and Restart Procedure 8-8

9 Using the Index Lists and Procedures

Overview 9-1

Getting Started 9-2

Master Task Index 9-5

Recommended Test Equipment 9-7

10 Acceptance Tasks

Overview 10-1

IXL-001: Acceptance Task Index 10-2

NTP-002: Accept WaveStar® OLS 1.6T 10-3

11 Circuit Order Tasks

Overview 11-1

IXL-001: Circuit Order Task Index 11-2

NTP-002: Add Optical Channel to In-Service WaveStar® OLS 1.6T 11-3

NTP-006: Delete Optical Channel from In-Service WaveStar® OLS 1.6T 11-9

12 Operations Tasks

Overview 12-1

IXL-001: Operations Tasks Index 12-2

NTP-002: Install Software (Initial Installation/Upgrade/Change) into the CIT and a Network Element 12-3

NTP-003: Copy Software from One Network Element to Another Network Element 12-5

13 Trouble Clearing Tasks

Overview 13-1

IXL-001: Trouble Clearing Task Index 13-2

TAP-100: Technical Assistance 13-3

TAP-102: Clear CR/PROMPT, MJ/DEFERRED, MN LED, or TCA 13-5

TAP-104: Clear Trouble Report 13-14

TAP-107: Address Environmental Input and/or Control Output Condition 13-19

TAP-108: Address Missing or Incorrect Response 13-20

TAP-110: Address Incoming Signal Failure 13-23

TAP-111: Clear ’Circuit Pack Failure’ 13-29

TAP-112: Clear ’Circuit Pack Removed’ 13-34

TAP-113: Clear ’FLASH or BOS Failure’ 13-39

TAP-114: Clear Condition When ’ABN’/NE ACTY/INFO-N LED is Lit 13-47

TAP-117: Clear ’BACKUP:IP, CPYPGM:IP, INITSWD:IP, Restore:IP and SW-DWNLD:IP’ 13-50

TAP-119: Clear ’Circuit Breaker/Power Failure ″A or B″ or ″A and B″’ 13-52

TAP-121: Clear ’No CP Expected in Slot’ 13-58

TAP-124: Address ’Reset in Progress’ 13-63

TAP-125: Clear ’FLASH Unrecognizable Code’ 13-65

TAP-126: Clear ’FLASH/SYSCTL Code Mismatch″ 13-66

TAP-127: Clear ’Unexpected CP Type’ 13-70

TAP-128: Clear Trouble In CIT (CIT Does Not Respond to Commands) 13-75

TAP-129: Address ’Circuit Pack Booting’ 13-77

TAP-130: Restore Network Element Operation After Power Loss 13-80

TAP-131: Clear ’Client Synchronization Failure’ 13-84

TAP-132: Clear ’Topology Construction In Progress’ 13-89

TAP-133: Clear ’FLASH Removed’ 13-90

TAP-144: Clear ’OMU/ODU warm-up in progress’ 13-94

TAP-152: Address Incoming (LOF/LOS/LOL) Signal Failure 13-95

TAP-156: Clear ’J0 Mismatch’ 13-101

TAP-160: Clear ’Power ″A or B″ for ″Fan 1 or 2″ Failures’; or ’Power ″A and B″ for ″Fan 1 or 2″ Failures’ 13-104

TAP-162: Clear ’Fan ″1″ or ″2″ or Clogged Dust Filter ″1″or ″2″ Failure’ 13-105

TAP-166: Clear ’APSD Active-Line’ 13-107

TAP-167: Clear ’APSD Active-ODU’ 13-109

TAP-174: Clear ’Insufficient Span Loss (<10 dB)’ 13-113

TAP-177: Test LED In-Progress 13-115

TAP-178: Clear SUPVY Add Input LOS 13-116

TAP-179: Clear ’Topology Construction Incomplete’ 13-120

TAP-180: Clear `WAD Drop Channel LOS’ 13-122

TAP-181: Clear ’SUPVY Drop Output LOS’ 13-124

TAP-182: Clear ’OW1TYPE, OW2TYPE, or OW3TYPE’ 13-127

TAP-184: Clear ’Bay Bus Failure, BC Bus Failure, OH Bus Failure’ 13-128

TAP-186: Clear ’OMS (OA) LOS’ 13-133

TAP-188: Clear ’OMS (ODU) LOS’ 13-137

TAP-190 Clear ″OMON LOS″ 13-141

TAP-192: Clear ’Local SUPVY DL Failure,’ ’Express SUPVY DL Failure, or ’PROVDLTYPE Mismatch’ 13-146

TAP-193: Clear ’Invalid Primary DSA Address’ 13-150

TAP-194: Clear ’RM Unreachable’ 13-152

TAP-195 Clear ’DSA Unreachable’ 13-157

TAP-197: Clear ’WaveWrapper Path Trace Mismatch’ 13-160

TAP-202: Clear ’WAD Add LOS’ 13-163

TAP-207: Clear ’Unexpected Channel’ 13-167

TAP-210: Clear ’Optical Channel Transmit Failure’ 13-168

TAP-211: Clear ’Clamping Transmit OA to Output O-Channel Power’ 13-173

TAP-212: Clear ’DCM Failure’ and/or Isolate Defective DCM Connections 13-177

TAP 213: Clear TCA Optics ’OLINE (TOPR-OL)’ 13-183

TAP 214: Clear TCA Optics ’OLINE (TOPT-OL)’ 13-186

TAP-215: Clear ’TCA Optics OCHAN (SPR-C)’ 13-188

TAP-216: Clear ’TCA Optics: OCHAN (SPT-C)’ 13-193

TAP-217: Clear ’TCA Optics: OLINE (PLE-RPx) {x=1-6}’ 13-195

TAP-218: Clear ’TCA Optics: OLINE (PLE-TPx) {x=1-6}’ 13-198

TAP-219: Clear ’TCA Optics: OTU OC-48/STM-16 (OPR)’ 13-201

TAP-220: Clear ’TCA Optics: OTU OC-48/STM-16 (OPT)’ 13-204

TAP-221: Clear ’TCA Optics: OTU OC-48/STM-16 (LBC)’ 13-206

TAP-222: Clear ’TCA Optics: OTU OC-192/STM-64 (OPR)’ 13-207

TAP-223: Clear ’TCA Optics: OTU OC-192/STM-64 (OPT)’ 13-210

TAP-224: Clear ’TCA Optics: OTU OC-192/STM-64 (LBC)’ 13-212

TAP-225: Clear ’TCA Optics: OTU HSBB (OPR)’ 13-214

TAP-226: Clear ’TCA Optics: OTU HSBB (OPT)’ 13-218

TAP-227: Clear ’TCA Optics: OTU HSBB (LBC)’ 13-220

TAP-230: Clear ’TCA Optics: SUPVY (SPR-SU)’ 13-222

TAP-231: Clear ’TCA Optics: SUPVY (SPT-SU)’ 13-225

TAP-232: Clear ’Incoming ORS Client LOS’ 13-228

TAP-233: Clear ’Incoming ORS Line LOS’ 13-233

TAP-234: Address ’Incoming LOS Signal Failure When OTU is Associated with ORS’ 13-240

TAP-235: Address ’DCM Port Loss Out of Range’ 13-244

TAP-236: Clear ’OCh Payload Label Mismatch’ 13-250

TAP-237: Clear ’TCA Digital Alarm OTU OC48 or 192 CVS, ESS, SESS, or SEFESS (15 min/1 day)’ 13-252

TAP-238: Clear ’TCA Digital Alarm OTU OC192 FEC-EC, FEC-UBC (15 min/1 day)’ 13-256

TAP-240: Clear ’Outdated Boot Flash’ 13-259

TAP-241: Clear ’DSA Registration Error’ 13-263

TAP-242: Clear ’MUX OTU LMI’ 13-264

14 Detail Level Procedures

Overview 14-1

IXL-001: Detail Level Procedures Index 14-2

DLP-501: Connect and Condition Craft Interface Terminal (CIT) 14-4

DLP-502: Test LEDs on Circuit Packs 14-6

DLP-506: Verify WaveStar® OLS 1.6T Elements Are Connected 14-8

DLP-507: Identify Source of Incoming Signal 14-9

DLP-509: Install/Remove Apparatus Blank 14-10

DLP-510: Inspect and Clean Optical Fiber Connectors 14-11

DLP-511: Install/Remove Shelf Cover 14-19

DLP-512: Install/Remove Lightguide Buildout 14-23

DLP-514: Remove and/or Install Circuit Pack 14-27

DLP-517: Inspect Optical Fiber(s) 14-40

DLP-518: Initiate or Terminate Login Session to a Network Element Using WaveStar® OLS 1.6T CIT 14-41

DLP-519: Modify, Disable, Enable or Add a User’s Login and/or Password 14-43

DLP-522: Replace Power Line Filter 14-47

DLP-524: Connect Optical Power Meter for Measurement at OTU () IN () Port 14-49

DLP-526: Inspect/Replace Dust Filter 14-54

DLP-527: Replace Fan Assembly 14-56

DLP-528: LBO Application 14-57

DLP-529: Baseline Optical Parameters 14-72

DLP-530: DCM LBO Procedure 14-84

DLP-531: Packaging of Lucent Technologies Bays, Subrack Assemblies, and Individual Circuit Packs for Return 14-86

A Alarm Reference Guide A-1

Overview A-1

Alarm Condition Table A-2

B Character Set Definitions B-1

Overview B-1

Symbolic Character Set B-2

Numeric Character Set B-3

Alphabetic Character Set B-4

GL Glossary GL-1

IN Index IN-1

List of Figures

1 Security Administration

1-1 Interfaces Supported by NEs 1-3

2 Operation Interfaces

2-1 Block Diagram of the UI 2-2

2-2 WaveStar® OLS 1.6T User Panel 2-5

3 WaveStar® OLS 1.6T CIT

3-1 WaveStar® OLS 1.6T CIT with Direct Connection to the NE User Panel 3-3

4 Provisioning

4-1 Use of Express Datalink to form a Single Level 2 Routing Domain 4-9

8 Automatic Power Shutdown (APSD)

8-1 APSD for a Two Fiber Cut Scenario 8-9

8-2 APSD Restart for Two-Fiber Cut Scenario 8-10

8-3 APSD for One-Fiber Cut Scenario 8-11

8-4 Type 2 WAD Applications 8-13

8-5 OA to ODU - Removing an ODU pack 8-13

8-6 APSD for a Two Fiber Cut Scenario 8-15

14 Detail Level Procedures

14-1 Image of Clean Connector 14-14

14-2 Acceptability Criteria for Single Mode and Multimode Fibers 14-17

14-3 Duplex LC block and Connector 14-25

14-4 Simplex LC Block and Connector 14-26

14-5 Location of LBOs at OTU (One Direction) 14-53

List of Tables

1 Security Administration

1-1 Original Login ID 1-6

1-2 Mapping of TL1 Commands to User Privilege Codes 1-10

2 Operation Interfaces

2-1 External Interfaces 2-4

4 Provisioning

4-1 Slot-Related Reports Affected by NETYPE and OTPS Associations 4-7

5 Performance Monitoring

5-1 User Commands for Manual Baselining 5-16

5-2 Supported Performance Parameters 5-20

5-3 Performance Parameter Processing 5-24

5-4 Error Event Counter Definitions 5-29

5-5 Monitored SONET Physical Layer Performance Parameters 5-32

5-6 Summary of Digital Performance Monitoring Processes that Affect Digital Parameters 5-39

5-7 Summary of Analog Performance Monitoring Processes that Affect Analog Parameters 5-40

5-8 Alarm Attributes Associated with QOS 5-42

5-9 High and/or Low Thresholds Parameters that Can NOT be User-provisioned 5-44

6 Maintenance

6-1 J0 STI 16-Byte Frame 6-5

6-2 Monitored Incoming Signal 6-12

6-3 10 BaseT Ethernet Interface Types 6-20

7 Alarms and Indicators

7-1 SONET Alarm Definitions 7-2

7-2 SDH Alarm Definitions 7-3

9 Using the Index Lists and Procedures

9-1 Procedure Classifications 9-3

9-2 Task Index 9-3

9-3 Types of Procedures 9-4

9-4 Master Task Index 9-5

9-5 List of Recommended Test Equipment 9-7

10 Acceptance Tasks

10-1 Acceptance Task Index 10-2

11 Circuit Order Tasks

11-1 Circuit Order Task Index 11-2

12 Operations Tasks

12-1 Operations Task Index 12-2

13 Trouble Clearing Tasks

13-1 Trouble Clearing Task Index 13-2

13-2 Trouble Condition — TAP Cross Reference 13-6

13-3 Waiting Times 13-33

13-4 Waiting Times 13-38

13-5 Determine Command for Condition 13-48

13-6 Waiting Times 13-62

13-7 Waiting Times 13-74

13-8 Waiting Times 13-262

14 Detail Level Procedures

14-1 Detail Level Procedure Index 14-2

14-2 Circuit Packs/Apparatus Units and Ports 14-38

14-3 OTU Input Power Range 14-52

14-4 Target Level for OMU OUTPUT 2 14-64

A Alarm Reference Guide

A-1 Alarm Condition Table (Events Related To Commands are Italicized) A-3

B Character Set Definitions

B-1 Symbolic Characters B-2

B-2 Numeric Character Set B-3

B-3 Alphabetic Character Set B-4

About this information product

Purpose

The WaveStar® OLS 1.6T (400G/800G) User/Service Manual provides detailed descriptions of the operation, maintenance, and task oriented practices that are necessary for optimal performance of the WaveStar® OLS 1.6T system.

The WaveStar® OLS 1.6T is maintained through Task Oriented Procedures (TOPs). A general knowledge and understanding of the software for the OLS 1.6T should precede the use of these TOPs.

Reason for reissue

This document was reissued to provide new information about Release 6.1 of the WaveStar® OLS 1.6T.

Safety labels

The following safety labels are used in this document:

DANGER

This admonishment shows the presence of a hazard that ***will*** *cause death or severe personal injury if the hazard is not avoided.*

WARNING

*This admonishment shows the presence of a hazard that **can** cause death or severe personal injury if the hazard is not avoided.*

CAUTION

*This admonishment shows the presence of a hazard that **will** or **can** cause minor personal injury or property damage if the hazard is not avoided. Caution is also used for property-damage-only accidents. This includes equipment damage, loss of software, or service interruption.*

Intended audience

This manual is intended primarily for technicians responsible for performing maintenance and trouble clearing tasks for the WaveStar® OLS 1.6T.

How to use this information product

The sections of the User/Service Manual are marked with tabs and provide the following information:

Chapter 1, "Security Administration" provides a detailed description of how the WaveStar® OLS 1.6T manages user accounts and monitors system security.

Chapter 2, "Operation Interfaces" provides information on system interfaces and associated LEDs.

Chapter 3, "WaveStar® OLS 1.6T CIT" summarizes information on the hardware and software requirements for Lucent Technologies' WaveStar® OLS 1.6T-CIT application software.

Chapter 4, "Provisioning" provides information on the process of assigning values to parameters in memory that determine the operating characteristics of the WaveStar® OLS 1.6T.

Chapter 5, "Performance Monitoring" provides information on proactive maintenance of the WaveStar® OLS 1.6T.

Chapter 6, "Maintenance" introduces the maintenance features of the WaveStar® OLS 1.6T system and describes the features that

continuously monitor the overall health of all the equipment and signals passing through the system.

Chapter 7, “Alarms and Indicators” discusses alarm mappings and Alarm Severity Assignment Profiles.

Chapter 8, “Automatic Power Shutdown (APSD)” provides information on APSD availability, trigger conditions and system restarts.

Chapter 9, “Using the Index Lists and Procedures” provides information for using the Index Lists (IXLs), Non-Trouble Procedures (NTPs), Task Oriented Procedures (TAPs), and Detail Level Procedures (DLPs) to perform acceptance, circuit order, operation, and trouble clearing tasks necessary for the WaveStar® OLS 1.6T.

Chapter 10, “Acceptance Tasks” contains a list of procedures used to accept hardware after installation.

Chapter 11, “Circuit Order Tasks” contains a list of procedures that are used when adding or deleting work order items for an optical line.

Chapter 12, “Operations Tasks” contains a list of procedures to use in daily operations.

Chapter 13, “Trouble Clearing Tasks” covers procedures on clearing the conditions that cause an alarm and procedures for clearing trouble reports, as well as a list of all TAPs and the correct order in which to perform the tasks.

Chapter 14, “Detail Level Procedures” contains detailed “how-to” instructions, as well as a list of all DLPs and the correct order in which to perform the tasks.

Appendix A, “Alarm Reference Guide” provides an index and description of the system conditions and alarms.

Appendix B, “Character Set Definitions” provides the set of symbolic characters for use in User Login ID and Password applications.

The “Glossary” provides a list of common terms and acronyms.

The Index provides page numbers for key words and subject names.

Conventions used

The following conventions are used throughout this guide:

- For each TL1 command (for example, RTRV-LOG/TL1), there are corresponding CIT and SNMS commands.
- ***Italic*** type is used for emphasis.
- **Bold** type is used for to identify button selections and CIT selections.
- `Constant-Width` type is used to identify conditions and system messages.

Related documentation

The *WaveStar® OLS 1.6T User/Service Manual*is part of a set of documents that support the WaveStar® OLS 1.6T system. Ordering information is provided on the copyright page. The following documents are included in the set

Select Code	Document Title
365-575-786	*WaveStar® OLS 1.6T (400G/800G) Applications Planning Guide*
365-575-788	*WaveStar® OLS 1.6T (400G/800G) Operations Systems Engineering Guide*
365-575-789	*WaveStar® OLS 1.6T (400G/800G) Applications Ordering Guide*
365-575-790	*WaveStar® OLS 1.6T (400G/800G) Installation Manual*
365-575-791	*WaveStar® OLS 1.6T (400G/800G) System Turn-up Services*
365-575-792	*WaveStar® OLS 1.6T (400G/800G) Installation Manual and System Turn-up Services*
365-575-793	*WaveStar® OLS 1.6T (400G/800G) Long Single Span Application and Raman Shelf Offering*
C109154401	*WaveStar® OLS 1.6T (400G/800G) Software Release Description*

Related training

The Customer Training and Information Products (CTIP) Organization provides management courses for system planning, engineering, and ordering, as well as courses to train telecommunications technicians in installation, operations, and maintenance. Suitcasing of these courses is also available. Contact the CTIP Organization at ***1-888-LUCENT8 (1-888-582-3688)*** to enroll in training classes. To arrange suitcase sessions, call the Product Training Manager at ***1-800-432-6317*** (within USA) or ***1-614-764-5542*** (worldwide).

The available WaveStar OLS 1.6T courses are listed in the table below.

Course Number	Course
LW2255	WaveStar® OLS 1.6T Applications Planning—instructor-led
LW2446	WaveStar® OLS 1.6T Installation and WaveStar® OLS 1.6T Testing—instructor-led, hands-on (for Lucent Personnel only)
LW2655	WaveStar® OLS 1.6T Operations and Maintenance—instructor-led, hands-on

Schedule and Registration

For more information or to register for any of these courses, call:

1-888-LUCENT8 and select option 2

Fax: 1-407-767-2677

Or write to:

Lucent Technologies

Customer Training and Information Products

240 E. Central Parkway

Altamonte Springs, FL 32701

Lightwave Safety Guidelines

The following precautions should be observed.

General Laser Information

DANGER

Disabling the APSD feature during installation, servicing, or maintenance results in an FDA/IEC Class IIIb/3B laser hazard.

The WaveStar® OLS 1.6T and associated optical test sets use semiconductor laser transmitters that emit light at wavelengths between approximately 800 nanometers (nm) and 1600 nm. The emitted light is above the red end of the visible spectrum, which is normally not visible to the human eye. Although radiant energy at near-infrared wavelengths is officially designated invisible, some people can see the shorter wavelength energy even at power levels several orders of magnitude below any that have been shown to cause injury to the eye.

Conventional lasers can produce an intense beam of monochromatic light. Monochromatic light is a single wavelength output of pure color that may be visible or invisible to the eye. A conventional laser produces a small-size beam of light, and because the beam size is small the power density (also called irradiance) is very high. Consequently, lasers and laser products are subject to federal and applicable state regulations as well as international standards for their safe operation.

A conventional laser beam expands very little over distance or is said to be very well collimated. Thus, conventional laser irradiance remains relatively constant over distance. However, lasers used in lightwave systems have a large beam divergence, typically 10 to 20 degrees. Here, irradiance obeys the inverse square law (doubling the distance reduces the irradiance by a factor of 4) and rapidly decreases over distance.

Laser Safety and Lucent Products

Lucent is committed to design optical fiber transmission equipment that minimizes operator and service personnel exposure to potentially hazardous levels of optical energy during service and operation. However, the continued safe use of optical transmission, optical cables and passive optical connection equipment requires a partnership with customers to assure that these systems are deployed and maintained in

a safe manner. While automatic laser power reduction systems in Lucent″s higher power transmission equipment respond quickly to reduce laser emissions to safe levels in the event of a fiber disconnection or break, network operators must take proper action in the event of an alarm.

In a typical network, our optical cables and passive optical connection equipment can carry signals from various vendor sources that may have different degrees of safety controls. We urge our customers to properly assess the power of these sources to ensure that their safety controls are adequate.

To strengthen our partnership and to assure the continued safe deployment and use of optical networks, we urge you to use the following standards as your guides for laser safety for your customers and employees:

1. In the U.S.:
   ANSI Z136.1 - American National Standard for Safe Use of Lasers, and
   ANSI Z136.2 - American National Standard for Safe Use of Optical Fiber Communication Systems Utilizing Laser Diode and LED Sources.
2. Elsewhere:
   IEC 60825 Safety of Laser Products Part 1: Equipment classification, requirements and user's guide
   IEC 60825 Safety of Laser Products Part 2: Safety of optical fiber communication systems

Important! It should be noted that recent studies in Europe have suggested that power as low as 50 mW can ignite certain hazardous (classified) gaseous/vapor/mist/dust environments under worst case, dusty conditions. Standards are being written, both in the US and the International Electrotechnical Commission (IEC), to address optical installations in hazardous (classified) environments. If you must deploy high power systems in such environments, you should assess the impact.

Lasers and Eye Damage

Light energy emitted by laser and high-radiance light-emitting diodes (LEDs) in the 400- to 1400-nm range may cause eye damage if absorbed by the retina. When a beam of light enters the eye, the eye magnifies and focuses the energy, magnifying the irradiance. The irradiance of the energy that reaches the retina is approximately 10^5 or

100,000 times that at the cornea, and if sufficiently intense, may cause a retinal burn.

The damage mechanism at the wavelengths used in telecommunications is thermal in origin, that is, damage caused by heating. Therefore, a specific amount of energy is required for a definite time to heat an area of retinal tissue. Damage is not instantaneous. It occurs only when one looks at the light sufficiently long enough that the product of the retinal irradiance and the viewing time exceeds the damage threshold. Light energies above 1400 nm would cause surface and skin burns and do not affect the retina. The thresholds for injury at wavelengths greater than 1400 nm are significantly higher than for wavelengths in the retinal hazard region.

Classification of Lasers

Manufacturers of lasers and laser products in the United States are regulated by the Food and Drug Administration″s Center for Devices and Radiological Health (FDA/CDRH) under 21 CFR 1040. These regulations require manufacturers to certify each laser or laser product as belonging to one of six major Classes I, II, IIa, IIIa, IIIb, or IV. The International Electro-technical Commission is an international standards body that writes laser safety standards under IEC-60825. Classification schemes are similar with Classes divided into Classes 1, 2, 3A, 3B, and 4. Lasers are classified according to the accessible emission limits and their potential for causing injury. Lightwave systems are generally classified as Class I/1, because, under normal operating conditions, all energized laser transmitting circuit packs are terminated on optical fibers which enclose the laser energy with the fiber sheath forming a protective housing. Also, covers are in place over the circuit pack shelves. The circuit packs themselves, however, may be FDA/CDRH Class I or IIIb, or IEC Class 1, 3A, or 3B.

Lightwave Safety Precautions

Under normal operating conditions, the WaveStar® OLS 1.6T system is totally enclosed and presents no risk of eye injury. It is a Class I system under the FDA/CDRH scheme.

The lightguide cables that interconnect various components of a lightwave system can disconnect or break and may expose people to lightwave emission. Also, certain measures and maintenance procedures may expose the technician to emission from the semiconductor laser during installation and servicing. Unlike more familiar laser devices, such as solid-state and gas lasers, the emission

pattern of a semiconductor laser results in a highly divergent beam. In a divergent beam, the irradiance (power density) decreases rapidly with distance. The greater the distance, the less energy will enter the eye and the less potential risk for eye injury.

Inadvertently viewing an unterminated fiber or damaged fiber with the unaided eye at distances greater than 5–6 in normally will not cause eye injury provided the power in the fiber is less than a few milliWatts at the shorter wavelengths and higher at the longer wavelengths. However, damage may occur if an optical instrument such as a microscope, magnifying glass, or eye loupe is used to stare at the energized fiber end.

WARNING

Use of controls, or adjustments, or performance of procedures other than those specified herein may result in hazardous laser radiation exposure.

Safety Precautions for Enclosed Systems

Under normal operating conditions, the WaveStar® OLS 1.6T System is completely enclosed; nonetheless, the following precautions should be observed:

- Because of the potential for eye damage, technicians should neither disconnect any lightwave cable nor splice or stare into the optical connectors terminating the cables.
- Under no circumstance should lightwave/lightguide operations be performed by a technician before satisfactorily completing an approved training course.
- Since viewing lightwave emission directly with an optical instrument such as an eye loupe greatly increases the risk of eye damage, an appropriate label must appear in plain view on the front of the main frame or lightguide termination/interconnection equipment.

Safety Precautions for Unenclosed Systems

During service, maintenance, or restoration, the WaveStar® OLS 1.6T system is considered unenclosed. During service, maintenance, or restoration, observe the following precautions:

- Only authorized, trained personnel should be permitted to do service, maintenance, and restoration. Avoid exposing the eye to emissions from unterminated, energized optical connectors at close distances. Laser modules associated with the optical ports of laser circuit packs are typically recessed, which limits the exposure distance. Optical port shutters and Automatic Power Reduction (APR) are engineering controls that are also used to limit the emissions. However, technicians removing or replacing regenerators should not stare or look directly into the vacant regenerator slot with optical instruments or magnifying lenses. (Normal eyewear or indirect viewing instruments, such as Find-R-Scope″s infrared optical viewers, are not considered magnifying lenses or optical instruments.)
- Only authorized, trained personnel should use the lightwave test equipment during installation or servicing, since this equipment contains semiconductor lasers. [Some examples of lightguide test equipment are Optical Time Domain Reflectometers (OTDRs), Hand-Held Loss Test Sets, and Feature Finders.]
- Under no circumstances should any personnel scan a fiber with an optical test set without verifying that all lightwave sources on the fiber are turned off.
- All unauthorized personnel should be excluded from the immediate area of lightwave transmission systems during installation and service.

Consult *ANSI Z136.1, American National Standard for Safe Use of Lasers* in the U.S., or outside the U.S., *IEC-60825, Part 2*, for guidance on the safe use of optical fiber optic communication systems in the workplace.

Warning and Compliance Labels

Warning Label

A warning label is provided on the inside front cover of each shelf assembly. The warning label shows the word ″DANGER″ in white lettering on a safety red background, and the text of the warning label in black lettering on a white background. See the figure below.

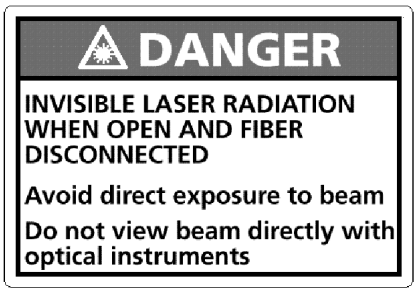

The label states (in both English and French):

DANGER

INVISIBLE LASER RADIATION WHEN OPEN

AND FIBER DISCONNECTED

Avoid direct exposure to beam.

Do not view beam with optical instruments.

IEC Caution Label

An IEC ″CAUTION″ label is provided on the inside front cover of each shelf assembly. See the figure below.

This label uses black lettering on a safety yellow background, and states in both English and French:

CAUTION

INVISIBLE LASER RADIATION WHENOPEN AND FIBER DISCONNECTED

Do not stare into beam or view directly with optical instruments.

IEC Hazard Level Label

An IEC ″HAZARD LEVEL″ label is provided on the faceplate of all circuit packs with optical connectors which could permit access to

IEC 1M emissions. This includes the OA, ODU1, and WAD Circuit Packs. See the figure below.

Rear Cover Warning Label

An warning label is provided on the rear cover of each equipment bay, cabinet, and miscellaneously mounted shelf that states:

NOTICE: UNTERMINATED OPTICAL CONNECTORS MAY EMIT LASER RADIATION. AVOID DIRECT EXPOSURE TO THE BEAM. DO NOT VIEW BEAM WITH OPTICAL INSTRUMENTS.

System Compliance Label

A compliance label stating that the system has been certified, along with the manufacturer″s name and place of manufacture, is attached to the rear of each equipment bay, cabinet, and miscellaneously mounted shelf. The figure below shows an example of a compliance label. The

compliance label is located on the rear of the equipment cabinet (at eye level) and miscellaneously mounted shelves.

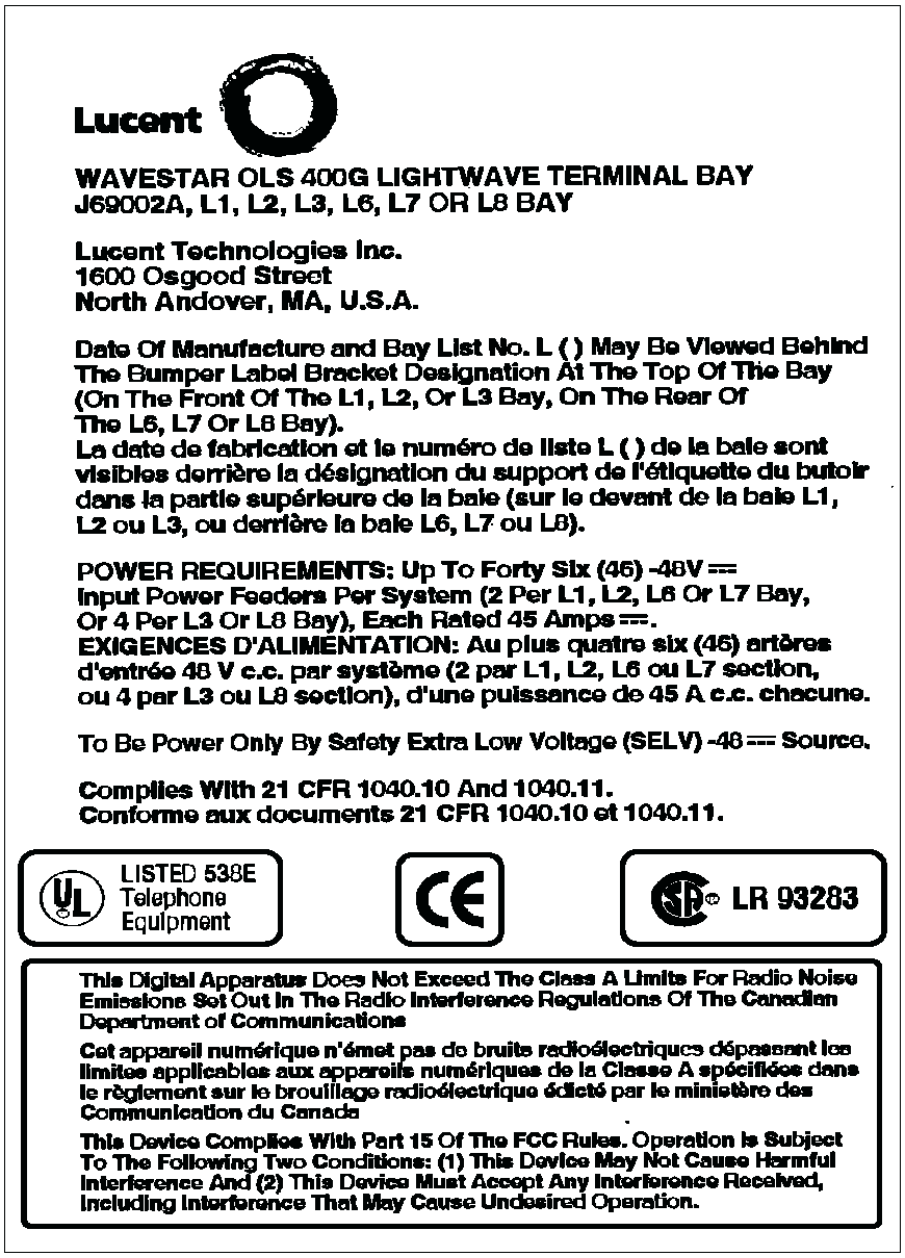

Laser Diode Compliance Label

A Laser Diode Compliance Label is attached to the non-component side of the PWB of each circuit pack containing a laser diode. This

includes all OA, OTU, and SUPVY circuit packs. See the figure below.

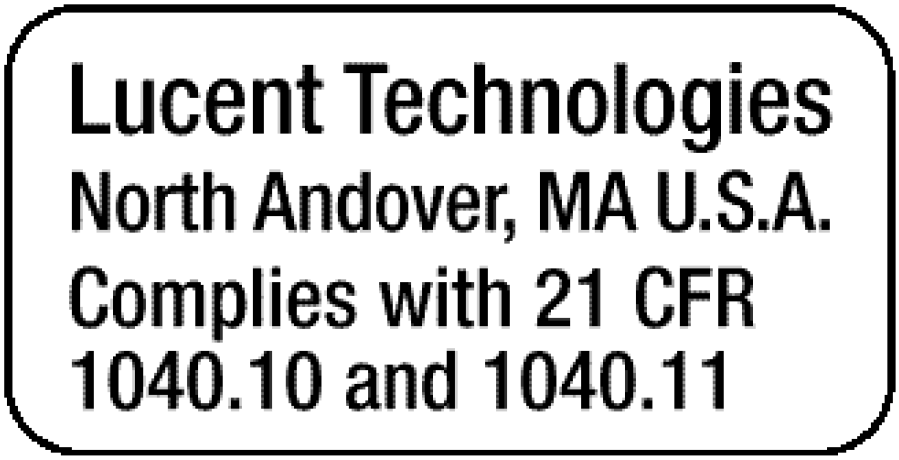

Electrostatic Discharge (ESD)

Introduction

The following information must be considered whenever working on the WaveStar® OLS 1.6T system, or one of its components.

CAUTION

Industry experience has shown that all circuit packs containing circuits can be damaged by static electricity that builds up on work surfaces and personnel. The static charges are produced by various charging effects of movement and contact with other objects. Dry air allows greater static charges to accumulate. Higher potentials are measured in areas with low relative humidity, but potentials high enough to cause damage can occur anywhere.

Precautions

The following precautions must be observed when handling circuit packs/units to prevent damage by electrostatic discharge:

- Assume all circuit packs contain solid-state electronic components that can be damaged by electrostatic discharge (ESD).
- When handling circuit packs/units (storing, installing, or removing) or when working on the backplane, always wear a grounded wrist strap or wear a heel strap and stand on a grounded, static-dissipating floor mat.
- Handle all circuit packs/units by the faceplate or latch and by the top and bottom outermost edges. Never touch the components, conductors, or connector pins.
- Observe all warning labels on bags and cartons. Whenever possible, do not remove circuit packs/units from antistatic packaging until ready to insert them into slots.
- If possible, open all circuit packs/units at a static-safe work position, using properly grounded wrist straps and static-dissipating table mats.
- Always store and transport circuit packs/units in static-safe packaging. Shielding is not required unless specified.
- Keep all static-generating materials such as food wrappers, plastics, and Styrofoam containers away from all circuit packs/units. When removing circuit packs/units from a cabinet, immediately place the circuit packs/units in static-safe packages.
- Whenever possible, maintain relative humidity above 20 percent.
- Always keep the electromagnetic interference (EMI)/ESD protective front covers on the shelves except during an upgrade or maintenance procedure. Once a circuit pack/unit is replaced in the shelf, immediately close the front cover.

Grounding Wrist Straps

Any connectors on the shelf interconnection panel that are not cabled should be fitted with a plastic dust cap to provide ESD protection. To reduce the possibility of ESD damage, shelves are equipped with grounding jacks to enable personnel to ground themselves using wrist straps while handling circuit packs/units or working on a shelf. See

the figure below. The wrist straps should be checked periodically with a wrist strap tester to ensure that they are working properly.

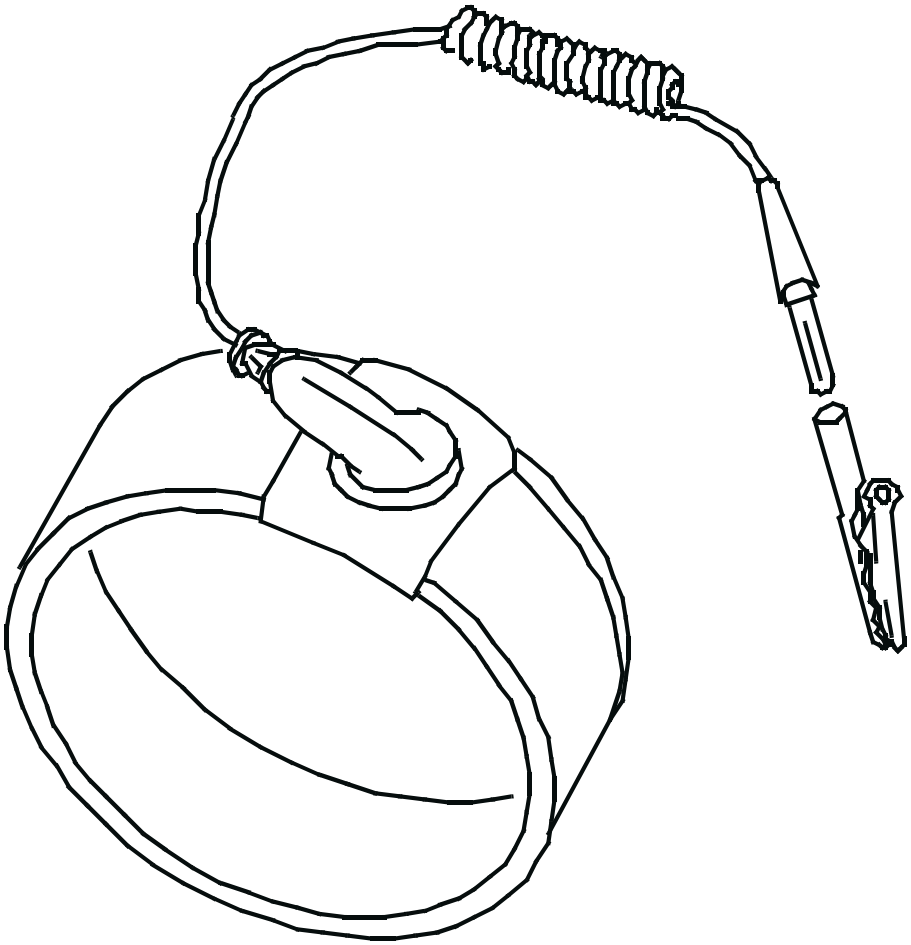

The grounding jacks for connection of wrist straps are located under the power switches on each shelf, fuse/power indicating panel, user panel, the right-front of the equipment cabinet, and the rear of the equipment bay. These jacks are labeled.

Safety Instructions

Save These Instructions

READ AND UNDERSTAND ALL INSTRUCTIONS

When using this telecommunication equipment, basic safety precautions should always be followed to reduce the risk of fire, electric shock, and injury to persons, including the following:

- Follow all warnings and instructions marked on the product.
- Slots and openings in this product at the back or bottom are provided for ventilation. To protect it from overheating, these openings must not be blocked or covered.
- Opening or removing rear covers or sheet-metal parts may present exposure to high current or electrical energy levels, or to other risks.
- Never push objects of any kind into this product through slots as they may touch dangerous voltage points or short out parts that could result in a risk of fire or electrical shock. Never spill liquid of any kind on the product.
- Refer servicing to qualified service personnel.
- Use caution when installing and modifying telecommunications lines.
- Never install telecommunication wiring during a lightning storm.
- Never install telecommunication jacks in wet locations unless the jack is specifically designed for wet locations.
- Never touch uninsulated telecommunication wires or terminals unless the telecommunication line has been disconnected at the network interface.
- Installation must include an independent frame ground conductor to building ground. Grounding/bonding circuit continuity is vital for safe operation of this equipment. Never operate with grounding/bonding conductor disconnected.
- This product has two -48 Vdc input power feeders. Disconnecting one power feeder will not de-energize the product. To reduce the risk of injury, disconnect both power supply cables when removing power from the system.
- Metallic telecommunication interfaces should not leave the building premises unless connected to telecommunication devices providing primary and secondary protection, as applicable.
- For continued protection against risk of fire, replace only with same type and rating of fuse.

- Use only Lucent Technologies manufactured, recognized circuit packs/units/modules. Refer to the *WaveStar® OLS 1.6T Installation Manual*, (365-575-763).
- This equipment is intended for installation in Restricted Access Locations where access is controlled or where access can only be gained by service personnel with a key or tool. Access to this equipment is restricted to qualified service personnel only.
- Power the unit only from -48 Vdc sources providing Safety Extra Low Voltage (SELV) outputs.
- This equipment must be provided with a readily accessible input power disconnect device as part of the building installation (such as a main power disconnect switch or external circuit breaker).

SAVE THESE INSTRUCTIONS.

Technical Support

Assistance in maintaining an installed system is available through Customer Technical Assistance Management (CTAM). CTAM routes the calls to either the Regional Technical Assistance Center (RTAC) or Customer Technical Support (CTS). Technical support personnel troubleshoot field problems twenty-four hours a day over the telephone and, if necessary, on site. In addition to the help at CTAM, Lucent Technologies also maintains a Customer Support website, www.lucent.support.com. The website provides customers with a way to access data in three different applications: Assistance Request, Solutions, and Product Notifications. Assistance Request allows external customers to search their Assistance Requests and to submit new Assistance Requests. Solutions allows customers to view and search known problems and solutions for products. Product Notifications allows customers to view and search for the latest information regarding Lucent products. For inquiries on obtaining a login, contact CTAM at the appropriate number below.

If you require additional assistance from Lucent Technologies, or need technical assistance, call:

Domestic	1-800-225-4672
International	1-630-224-3672

When calling CTAM, make sure to have the following information on-hand:

- product name
- product version
- RTAC or CTS contact name (if there is a specific contact)
- your phone number
- site number (if there is more than one site)
- site location (city and state)
- priority: 1-Outage, 2-High, 3-Medium, and 4-Low
- a brief description of the problem

RTAC organizations are supported by a centralized CTS for transmission products. CTS maintains a close relationship with Bell Laboratories and other Lucent organizations to expedite resolutions and maintain contact with the development community. This association provides continuous accessibility to every phase in a product life cycle and assures a prompt resolution to all inquiries.

Ordering Documents

The WaveStar® OLS 1.6T customer documents for Release 6.1 can be ordered as individual paper copies or as a set on a CD-ROM from the Lucent Technologies. Lucent entities should access at http://www.lucentdocs.com or http://www.lucent8.com, while all other customers may access at http://www.lucentdocs.com.

Additional Copies/Standing Order List

To order additional copies of this document and/or request placement on the standing order list, send or call in the request as follows:

Customer	Mail Order	Telephone Order (Monday through Friday)
Commercial Customers[1,2]	Lucent Technologies Attention: Order Entry Section 2855 N. Franklin Road P.O. Box 19901 Indianapolis, IN 46219	Within USA: 1-888-LUCENT8 (1-888-582-3688) 7:30 am to 6:30 pm EST FAX: 1-800-566-9568 From Europe, The Middle East, and Africa: Toll 1-317-322-6416 From Canada, the Caribbean, and Latin America: Toll 1-317-322-6646 From Asia, the Pacific Region, and China: Toll 1-317-322-6411 Worldwide: FAX: 1-317-322-6699
RBOC/BOC	Process through your Company Documentation Coordinator	

Notes:

1. For commercial customers, a check, money order, purchase order number, or charge card number is required with all orders. Make checks payable to Lucent Technologies.
2. Lucent entities should use Form IND 1-80.80 FA.

One-Time Orders

One-time orders include a binder (if applicable) and the issue in effect at the time of the order. You may request placement on a standing order list for all later reissues of the document by calling the applicable Lucent Technologies number listed in the previous table.

RBOC/BOC customers should process document orders or standing order requests through their Company Documentation Coordinator.

How to comment

We welcome your comments. A feedback form is located immediately after the title page of this manual. Please fill out the form and fax it to +1 732-949-5000, or to the number shown on the form. If the feedback form is missing, please fax your comments to +1 732-949-5000. You can also send comments about this document to:

Lucent Technologies

Room 3E-609

101 Crawfords Corner Road

Holmdel, NJ 07733

1 Security Administration

Overview

Purpose Release 6.1 of the WaveStar® OLS 1.6T includes functions to manage user accounts (login ID, passwords, and privilege levels), and monitor system security. The OLS 1.6T full Security Administration features are supported through the CIT and OS TL1 interfaces.

□

Security Features

Identity

User identity is specified using a User ID — a unique identifier used by a Network Element (NE) to perform security management functions.

Authentication

A Password is used to verify the identity of the user. The password feature includes several levels of access privileges, and also examines password aging, which forces the users to change their password periodically. If the password is not changed within a provisioned period of time, the password expires.

Access Control

Specific users are allowed specific commands to specific objects. This feature is also used to activate or disable non-Super User logins quickly, for example, during routine maintenance or upgrade activities.

Other features include:

- User ID Lockout
- Inactivity Timers
- Intrusion Alert Alarms
- User Login Aging, and
- Temporary Logins

Security Administration

The NE provides security administration mechanisms that allow an administrator to control the usage and management of user logins, security features, and database of the NE, and to generate security audit trails when necessary via the corresponding network management interfaces.

Audit Trail

All security related transactions are recorded in the NE History Log. If a security breach is suspected, an audit trail can be performed to investigate whether/how the breach occurred.

□

NE Security Interfaces

Network Interfaces

Two separate network interfaces support security management within the WaveStar® OLS 1.6T. The EMS-NE Interface supports both TL1 via the OS port over OSI, and TL1 over TCP/IP. CIT-NE via the CIT port supports only TL1 over TCP/IP. See Figure 1-1 for a view of the interfaces supported by NEs.

Figure 1-1 Interfaces Supported by NEs

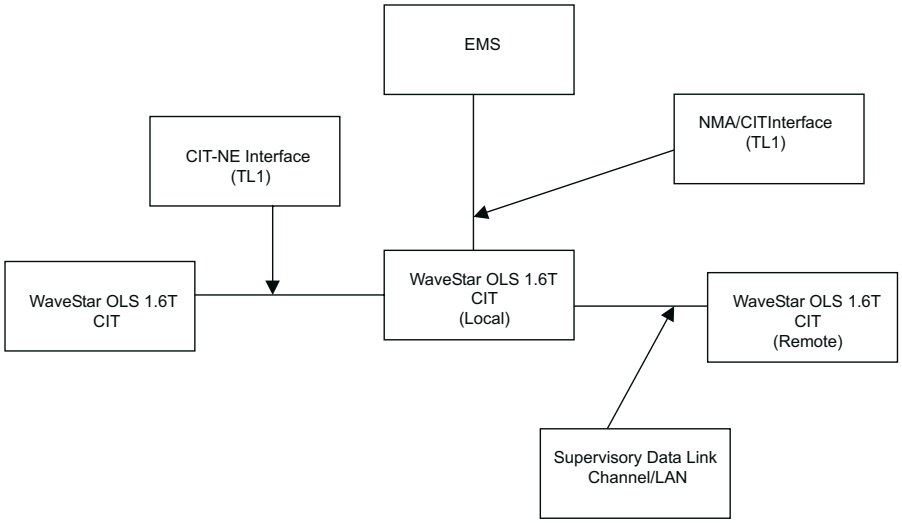

The two Super User logins are supported via the EMS interface for login session association. The NE allows the EMS to change the Super User ID and Password in the NE's local database.

The NE allows security administration functions to be performed via the CIT interface. A supervisory data link channel between the NEs can be used as a data communication channel(s) for remote access from the local NE to another remote NE using the CIT.

10BaseT Ports

There are two 10BaseT ports available on the NE to support management functions of the NE. These ports are:

- one CIT port, and
- one OS port

The NE does not allow disabling of the 10BaseT ports.

□

NE Logins

Overview

The NE provides a user with the appropriate security administration privileges to allow the user to add, modify and delete non-super user logins via the CIT Interface.

Super User Logins

The NE supports two Super User logins via the TL1 interface.

Non-Super User Logins

The NE supports the management of 510 Non-Super User logins via the CIT or the NMA TL1 interface.

Simultaneous Logins

The NE allows only Super Users from both the CIT and OS to log onto the NE using the same logins simultaneously.

Modifications

The NE does not allow any user to modify their own login security parameters, with the exception of changing their own password.

Temporary Logins

The NE allows a user with Security Administration privileges to create temporary logins with provisionable expiration dates (Temporary Login Aging). These temporary logins are automatically deleted on the specified date regardless of the frequency of use of the login.

The User Login can be changed from ″regular″ into ″temporary.″ There is no way to change from a temporary to a regular. If the administrator wants to change the temporary login ID to a regular login, he/she must delete the temporary login, and then use the same login id to create a regular user.

User Login Aging

The NE allows a user with Security Administration privileges to globally set the Login Aging parameter. This parameter may be provisioned to be 0 to 999 days, where the original value is 120 days. A value of 0 disables login aging. As long as a non-Super User logs in more frequently than the value of this parameter, the user's login remains active. If a user does not login to the NE within the specified period, the login will be deleted.

Important! Login aging applies only to non-Super User logins.

User ID Definition

The User ID consists of a string of case-sensitive alphabetic and/or numeric characters containing a minimum of one character and a maximum of ten characters from the defined character sets. Refer to Appendix B, “Character Set Definitions” for complete character set definitions.

Disabling a User ID

The NE allows a user with the appropriate administrative privileges to disable an existing non-Super User ID on demand. Disabling a login prevents the User ID from establishing a session. If the User ID is currently active, the User Login Session is automatically terminated.

Re-enabling a User ID

The NE allows a user with the appropriate administrated privileges to re-enable an existing non-Super User ID.

Port Security

All ports require a Login ID and Password in order to gain access.

□

NE Original Logins

Super User Logins

The NE supports two Super User Logins/Passwords. Refer to the table below for the two original Super User IDs.

Table 1-1 Original Login ID

Login	Password
LUC01 (that is, lucent-zero-one)	WS400G+01
LUC02 (that is, lucent-zero-two)	WS400G+02

These two original Super User logins are supported via the TL interface.

Creating New Super User Logins

The creation of additional Super User logins is not permitted by the NE.

Changing Super User Logins

A Super User's ID and Password can be changed with the following restrictions:

- A Super User's ID can only be changed by the other Super User.
- The Super User's access privilege can not be modified.
- Only a Super User is able to change the other Super User's password.

Deleting Super User Logins

Deletion of either Super User login is not permitted by the NE.

□

NE Passwords

Overview

Passwords are encrypted and stored in the NEs's database using strong encryption industry standards. Passwords will never be transmitted from the NE to the CIT or NMA.

Password Definition

Passwords consists of a string of a minimum of six and up to a maximum of ten alphabetic, numeric, and symbolic characters.

Passwords consist of at least one alphabetic character, one numeric character, and one symbolic character. Refer to Appendix B, "Character Set Definitions", for a complete list of character set definitions.

Passwords containing non-legal characters will be denied.

Administration

The NE provides each user the ability to change their own password based on password aging requirements. Passwords may be changed via the CIT or OS port interfaces.

The NE tracks the date of the last password change. If more days have passed than the provisioned allowable number of days, the NE considers the password as expired.

Non-Super User passwords are considered expired the first time a user logs in successfully following login creation. This forces users to change the original passwords that are provided by the security administrator.

Password Aging

A user is prevented from changing a password for the seven days immediately following a password change.

Once a password has expired, the user is required to change the password. Only after the user successfully changes the password will the NE allow the user access to the NE.

□

NE User Login Security

Access Control

User login security controls access to NEs by individual users. The NE authenticates the user IDs and passwords against the NE's local security database.

Once the user logs into a NE with a valid User ID and Password, user functions can then be performed based on the assigned User Access Privilege.

User login access will be denied via the OS-OSI interface during any NE reset processes, but is allowed once the NE reset in progress condition is cleared.

Functional Categories

All commands supported by NEs are grouped into the following five functional categories (assigned symbol shown in parentheses):

- Security Administration (S)
- Provisioning (P)
- Performance Monitoring (PM)
- Maintenance (M)
- Test Access (T)

Authorization Levels

Authorization Levels are used to add a measure of fine granularity to access control by restricting a user's access to certain commands within each functional category.

The WaveStar® OLS 1.6T System supports six authorization levels. These levels are listed below in descending level of privilege:

- Level 5 — Full authorization access
- Level 4
- Level 3
- Level 2
- Level 1
- Level 0 — No authorization is assigned

User Privilege Code

The User Privilege Code (UPC) is a combination of the Functional Category (FC) plus the Authorization Level (AL). Each NE supports the use of a UPC determining the set of commands that any given user is authorized to execute.

User Access Privilege (UAP) Assignments

The User Access Privilege (UAP) is a combination of UPCs that are assigned to a user based on the user's work/functional responsibility.

Each User Login is assigned, at a minimum, an S1 UAP.

The NE provides each user with Security Administration privileges the ability to assign the UAP for users added to the NE's local database according to the TL1 commands the user is authorized to execute. Available UAP assignments are:

- S[1-5] — For Security Administration (SA), Authorization Level 1 through 5.
- T[0-5] — For Test Access (TA), Authorization Level 0 through 5.
- PM[0-5] — For Performance Monitoring (PM), Authorization Level 0 through 5.
- P[0-5] — For Provisioning (P), Authorization Level 0 through 5.
- M[0-5] — For Maintenance (M), Authorization Level 0 through 5.

The authorization levels for all Function Categories are specified for each newly created User ID. Multiple UPCs (FC + AL) are specified using single ampersands (&) in TL1.

Refer to Table 1-2 for the mapping of TL 1 Commands to User Privilege Codes.

Table 1-2 Mapping of TL1 Commands to User Privilege Codes

Auth. Level	Functional Categories				
	P	**M**	**PM**	**T**	**S**
5					ABORT-DB-BACKUP
					DLT-USER-SECU
					ED-USER-SECU
					ENT-USER-SECU
					ENT-NE-SECU
	Including all commands below for each of the functional categories being assigned.				
4		OPR-PROTNSW-OTP		TEST-AUTO-LOCAL	ALW-FMM-RMVL
		RLS-PROTNSW-OTP			BACKUP-DB
					CPY-PRGM
					DWNLD-SW
					ED-DAT
					ENT-CID-SECU
					ENT-SYS
					INH-FMM-RMVL
					INIT-SYS
					INIT-SWD
					PROV-SYS
					RESTORE-DB
					RTRV-USER-SECU
	Including all commands below for each of the functional categories being assigned.				

Table 1-2 Mapping of TL1 Commands to User Privilege Codes (continued)

Auth. Level	Functional Categories				
	P	**M**	**PM**	**T**	**S**
3	DTL-ASSOC-OTPS	ALW-MSG-EQPT	INIT-PM-FTAM		CPY-BOOTFLASH
	ENT-ASSOC-OTPS	DLT-ASAP-PROF	INIT-REG-ALL	FACTORY-UTIL	ENT-OSI
	ENT-OLPP	ED-ASAP-PROF	INIT-REG-OTPS	FACTORY-UTIL	ENT-RMA
	ENT-OTPS	ENT-ASAP-PROF	SET-BASELINE-OCHAN		ENT-TSB
	ENT-SUPR	ENT-PROF-ASGNMT	SET-BASELINE-OLINE		
	ENT-TMGSRC-SUPR	ENT-OCHTRC	SET-BASELINE-SUPR		
	UPD-SYS	ENT-SECTRC	SET-PM-STIME		
		INH-MSG-EQPT	SET-TH-OCHAN		
		OPR-ACO-ALL	SET-TH-OLINE		
		OPR-EXT-CONT	SET-TH-OTPS		
		OPR-NIS-IND	SET-TH-SUPR		
		OPR-TRACE-OTU			
		OPR-TRACE-SUPVY			
		RLS-EXT-CONT			
		RLS-NIS-IND			
		RLS-TRACE-OTU			
		RLS-TRACE-SUPVY			
		SET-ATTR-ALM			
		SET-ATTR-CONT			
		SET-ATTR-ENV			
		TEST-ALM			
		TEST-LED			

Table 1-2 Mapping of TL1 Commands to User Privilege Codes (continued)

Auth. Level	Functional Categories				
	P	M	PM	T	S
2	Currently, there are no commands associated with Authorization Level 2.				
1	RTRV-ASSOC-OTPS	RTRV-AID-ASGNMT	RTRV-BASELINE-OCHAN		ACT-USER
	RTRV-EQPT	RTRV-ALM-ALL	RTRV-BASELINE-OLINE		CANC-USER
	RTRV-OLPP	RTRV-ASAP-PROF	RTRV-BASELINE-SUPR		ED-PID
	RTRV-OTPS	RTRV-ATTR-ALM	RTRV-PM-OCHAN		RTRV-AO
	RTRV-SUPR	RTRV-ATTR-CONT	RTRV-PM-OLINE		RTRV-CID-SECU
	RTRV-TMGSRC-SUPR	RTRV-ATTR-ENV	RTRV-PM-OTPS		RTRV-DAT
		RTRV-COND-ALL	RTRV-PM-STIME		RTRV-HDR
		RTRV-MAP-NEIGHBO	RTRV-PM-SUPR		RTRV-LOG
		RTRV-MAP-RING	RTRV-TH-OCHAN		RTRV-NE-SECU
		RTRV-NIS-IND	RTRV-TH-OLINE		RTRV-OSI
		RTRV-OCHTRC	RTRV-TH-OTPS		RTRV-RMA
		RTRV-PROF-ASGNM	RTRV-TH-SUPR		RTRV-SWDB-ATTR
		RTRV-PROTN-GROU			RTRV-SYS
		RTRV-SECTRC			RTRV-TSB
		RTRV-STATE			
		RTRV-TRACE-OA			
		RTRV-TRACE-OTU			
0	No Auth.	No Auth.	No Auth.	No Auth.	Not Applicable

Lucent Technologies - Proprietary
See notice on first page

UAP Provisioning Example

A User ID that requires a high provisioning privilege can be provisioned via the WaveStar® OLS 1.6T as ***S2&P5&PM1&M0&T3*** — where each functional category is assigned the following Authorization Level:

- Security Level 2
- Provisioning Level 5
- Performance Monitoring Level 1
- Maintenance Level 0 (no authorization)
- Test Level 3

Minimum UAP Assignment Level

A minimum UAP Level of S1 must be assigned to each user login so that the users can log into the NE.

Super Users

A Super User is allowed to perform all NE functions, including, but not limited to:

- Functions affecting security
- Access to the NE
- System Initialization
- NE Testing
- Software Installation
- Database Management
- Software Management

Only Super User have the original preset UAP values of:

- S5
- P5
- PM5
- M5
- T5

□

NE Login Sessions

Channel State

NE channels can be in one of three possible states:

- Login Active
- Login Inactive
- Password Expired

Channel ID

A Channel ID is a unique identifier for each channel login session in support of either a 10BaseT port for login or a remote login session.

The NE supports the number of channels that are accessible by the OSs from the following NE interfaces:

- Supervisory Data Link for the remote TL1 login associations; maximum of eight channels (that is, inbound)
- TL1 Interface; maximum of 16 channels
- CIT Port; maximum of five channels

The NE allows the WaveStar® OLS 1.6T CIT to log onto multiple remote NEs with or without having logged into the local NE (point of attachment).

Login Active State

A channel enters the Login Active State when a valid login command without an expired password is received by the NE. A channel reverts to the Login Inactive State when a valid logoff command is received by the NE, or a condition occurs in the NE or local NE that requires a cancellation of a login session.

Login Inactive State

All channels are, by default, in the Login Inactive state. A channel transitions out of this state when a valid login command is received by the NE. When a channel is in the Login Inactive state, the NE does not respond to any requests other than valid login requests. In addition, no notification messages appear on a channel in the Login Inactive State.

Password Expired State

A channel enters the Password Expired state when the NE receives a valid login command, but the Password for the User ID in the command has expired. In this state, the NE partially completes the command with text explaining that the User's Password has expired, and only accepts a `Change Password` command. If the command is successful, the User Login proceeds normally, and the channel enters the Login Active State. In all other cases, the channel returns to the Login Inactive State.

□

NE Login-Access Security Procedures

Description

A login attempt is successful if all of the following conditions are met:

- A provisioned User ID and correct Password are entered
- The User ID Lockout threshold has not been exceeded
- The User Login and NE Login Security are enabled (that is, non-Super Users are permitted to log onto the NE)

However, if these conditions are not met, the NE Login-Access Security feature will deny access to a user when attempting to log in, or may disconnect a user during an active session.

Login Session Disconnect

If a login session is active on a particular channel when the user successfully logs off from the NE:

1. Any responses to commands originating on the channel currently executing on the NE are dropped.
2. A logout:user-id message is recorded in the local NE's History Log.

If a login session is active on a particular channel and the NE or remote NE must disconnect:

1. Responses to any commands originating on the channel currently executing on the NE are dropped.
2. A logout:user-id-remote link down message is recorded in the local NE's History Log.

If a login session is active on a particular channel when the User is disabled by the Security Administrator:

1. Any commands that originated on the channel currently executing on the NE are dropped.
2. A logout:user-id-forced disconnect message is recorded in the local NE History Log.

Login Session Denied

A login session is denied for any one of the following reasons:

- Invalid User ID
- Invalid Password
- When login attempts exceed the User ID Lockout Threshold and the User ID Lockout Period is not over

- User ID is disabled
- Non-Super User NE logins are disabled

When a login attempt on a channel is denied:

1. A Login:user-id-DENY message is recorded in the History Log.
2. A Login Failed message is sent on the channel associated with the login attempt with no explanatory messages included.

□

NE User ID Lockout

Threshold

Each time the number of invalid sequential login attempts reaches the User ID Lockout Threshold for the same User ID, the NE prevents the User ID from logging in for a number of minutes equal to the ***User ID Lockout Period***. After this period expires, the NE resets the User ID Lockout Threshold count to zero.

Provisionable Parameters

The NE allows a user with the proper security administration privilege to provision the following User ID Lockout parameters on a per NE basis:

- ***User ID Lockout Threshold*** — the number of sequential invalid login attempts after which the User ID is locked out and an Intruder Alert Alarm is raised. The original value is 5. Range of values is 2 to 99.
- ***User ID Lockout Period*** — The number of minutes a User ID is locked out. The original value is 10. The provisionable range of values is 0 to 99.

Important! Setting the value of the User ID Lockout Period to 0 eliminates the User ID Lockout Period.

□

NE Intruder Alert Alarm

Definition When the total number of login attempts for a specific User ID exceeds the User ID Lockout Threshold on any of the network interfaces, an intrusion alert:user-id event condition is recorded in the NE History Log.

Important! The user will automatically be re-enabled once the elapsed time since lockout exceeds the provisioned value of the User ID Lockout period. The user can not be manually re-enabled by anyone during this waiting period.

□

EMS-NE Logins

Number of Channels

The NE supports a maximum of 16 channels for multiple User login session associations with the OSs. Either one of the two (2) Super User logins may be used via both the EMS interface and the DCN between the NEs.

The NE manages each login session independently and allows the user to obtain information regarding who is currently active on which channel for each of the NE's interfaces.

Permitted Operations

The NE allows the EMS Super User to:

- Create a user login
- Modify the Super User's own password, another Super User's ID and/or password, and the existing non-Super User logins
- Delete existing non-Super User logins
- Assign initial user passwords for any new user login created
- Change the password of any user ID
- Disable and re-enable specific non-Super User logins
- Provision the lockout threshold and period for all user logins
- Provision password aging interval
- Enable and disable the NE login security
- Set inactivity timeout values
- Globally set user login aging
- Provision temporary login aging
- Assign or modify user access privileges for non-Super User logins
- Display all existing user logins and all currently active user login sessions, including the user access privileges

□

EMS-NE Security Notification Management

Database Changes

The NE notifies the EMS whenever any of the following changes are made to an existing login:

- User ID
- User Access Privilege
- User ID Lockout Threshold,
- User ID Lockout Period
- Temporary Login Aging
- User Login Aging
- Password Aging
- Inactivity Timeout Period
- Last Login Time
- Last Logout Time
- User ID Status
- Last User ID Disabled Time

Event Notifications

The NE sends a notification, including the associated user ID, to the EMS whenever any of the following events occur:

- Login Creation
- Login Modification
- Login
- Logout
- Logout — Remote Link Down
- Intrusion Alert
- Logins Inhibited
- Logins Inhibited — Cleared

The User with proper privileges has access to the audit trail record, including security related alarms, events, and conditions.

□

CIT-NE Login Security

Description

NE Login Security provides the ability to control access on a per NE basis by inhibiting all non-Super Users from logging into the NE. The two Super User Logins are not affected by this security measure and are always allowed to login.

Disabling Logins

When the command is issued not to allow logins, all non-Super Users currently logged in are disconnected, and any attempt to log into the NE is denied.

When logins are disabled, a logins disabled condition is raised by the NE and is recorded in the History Log. The NE-ACTY user panel LED is activated when logins are inhibited.

Re-Enabling Logins

When logins are again enabled, the Logins Inhibited condition is cleared by the NE and logins inhibited-cleared is recorded in the History Log. The NE-ACTY user panel LED then deactivate unless activated by another condition.

NE Reset

When a NE is reset, the NE Login Security Parameter values are retained.

□

CIT-NE Inactivity Timeout

Description

The NE maintains an Inactivity Timer for each user session via both the CIT-NE and EMS TL1 interfaces. If a user does not interact with the NE during a provisioned period of time, the user is automatically logged off from the NE and a Logout:user-id-timeout message is recorded in the History Log.

Provisioning

The Inactivity Timeout value is provisioned on a per port basis for the CIT and EMS TL1 interface ports, and ranges from 0 minutes to 999 minutes. Setting the Timeout value to zero disables the feature. The original value is 30 minutes. All User Login association channel(s) via one of the two interface ports has the same provisioned Inactivity Timeout value for that specific port.

Timer Activation

The Inactivity Timer is active only when there is an active login session on the channel and the NE is expecting the user to input data. The Inactivity Timer is activated when, at the completion of a user-generated command, there is no pending message being processed by the NE. There is no corresponding Inactivity Timer for the DCN interfaces.

The Inactivity Timer is disabled whenever the NE is processing a command request.

□

CIT-NE Password Aging

Description

The NE requires users to periodically change passwords. If a user does not change their password within the provisioned period of time, their password expires. The next time the user attempts to log in to the NE, they will not be able to execute any commands until their password has been successfully changed.

Password Aging Interval

The Password Aging Interval may be set to:

- Zero (0), which disables the feature, or
- Between seven (7) and 999 days

The Password is set for each user login. The original value is 30 days.

Additional Constraints

When Password Aging is enabled, a user will not be able to change their password again until at least seven (7) calendar days have passed since the last time the password was successfully changed. If fewer than seven (7) calendar days have passed, any attempt to change the password will be denied.

Important! If Password Aging is disabled, passwords may be changed without any elapsed time restrictions.

□

CIT-NE User Login Aging

Description

If a non-Super User does not log in to the NE within the provisioned period of time, the login is deleted. As long as a user logs in more frequently than the provisioned value of this parameter, the login is retained.

Login aging applies only to non-Super-User logins, and the two Super User logins will never be deleted.

Valid Values

A user with security administration privileges is able to globally set the login aging parameter to be between zero (0) and 999 days. A value of zero disables login aging. The original value is 120 days.

Deleting a Login

When a login is deleted for inactivity, a login deleted: login-Id condition is recorded in the NE History Log.

Temporary Login Aging

The NE allows a user with security administration privileges to create a temporary login. Temporary logins have a provisionable expiration date and are automatically deleted on the specified date, regardless of the frequency of use.

□

CIT-NE Security Data Storage

Description

All security data related to the NE or individual user logins is kept in non-volatile memory (NVM). This ensures that data is retained in the event of a system failure or shutdown. All security information, except passwords, can be printed, viewed, and accessed as Read Only by users with Security Administrative privileges.

□

CIT-NE Audit Trail Record

History Log

The NE retains a History Log which tracks:

- login attempts, successful and failed
- reason for denial, such as an invalid User ID and/or Password, association, or communication link failures
- user logouts
- provisioning commands

Logged Information

All commands, except retrieve and test commands, log the following information:

- User ID
- Channel ID
- Time Stamp

□

EMS TL1-NE Authentication and Access Control

Description

The NE supports the same user login authentication and access control functions as those provided by the CIT for the EMS TL1 interface.

TL1 Logins

The NE supports a maximum of 16 TL1 login associations with the OSs via the EMS TL1 interface.

User Security

User security administration can be supported via both the EMS and CIT TL1 interface.

Inactivity Timeout

The inactivity timeout feature can be disabled for the EMS TL1-NE interface.

Password Aging

The password aging feature can be disabled for the TL1 interface.

Communications Link

The communication link between the NE and EMS TL1 will remain active once established. An automatic login routine is used by EMS TL1 to re-establish the link each time the NE has been restored following an out-of-service condition.

□

2 Operation Interfaces

Overview

Purpose This chapter describes the operation interfaces within the WaveStar® OLS 1.6T.

□

User Interface

User Interface (UI) Elements

The WaveStar® OLS 1.6T system UI includes the following elements:

- User Panel
- Equipment LEDs
- OS Interface
- Supervisory Channel
- CIT Interfaces
- Orderwire
- Miscellaneous Discrete Interfaces
- Time of Day Clock

Functional Block Diagram

The figure below shows a functional block diagram of the UI.

Figure 2-1 Block Diagram of the UI

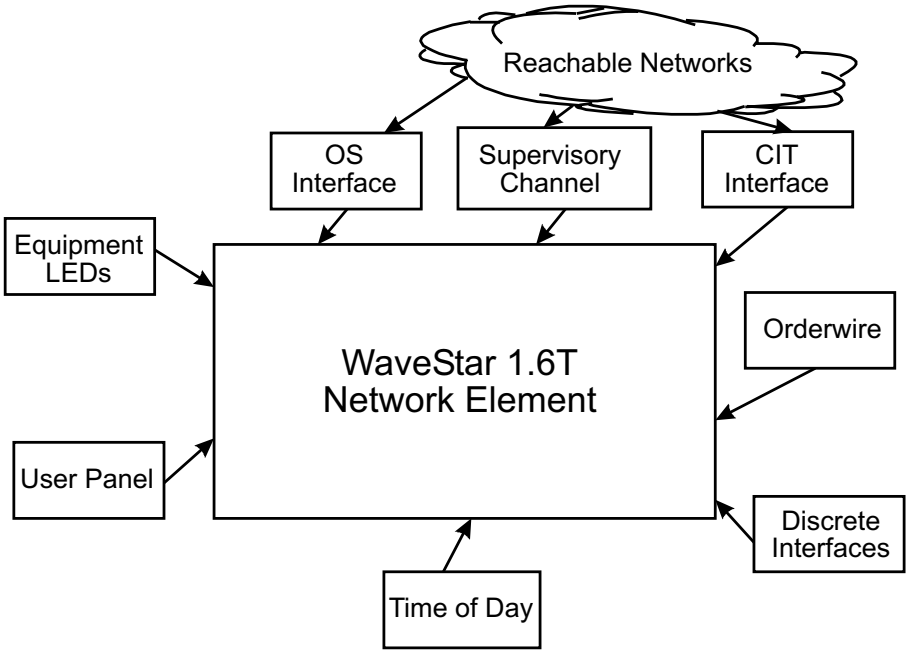

Network Definitions

The following definitions apply to the following discussions:

Reachable Networks. The ″Reachable Network″ is defined to be the set of NEs and/or Operating Systems (OSs) that can exchange messages using the data links built into the NEs (LANs

and Supervisory Data Links). This is equivalent to the OSI local routing area, and may include both Level 1 and Level 2 routing elements. There is only one Reachable Network defined from the perspective of a single NE. There may be physical links between different Reachable Networks, but from a messaging perspective, the networks are completely separate.

Gateways. A Gateway is defined to be a NE that provides a transport access function on behalf of a set of other NEs. The set of other NEs and the kinds of traffic being transported determine the type of Gateway. All NEs are capable of being generic message routing gateways. Some NEs may function as OS gateways due to their particular location (in the same office as OS).

Applications. For any application (for example, remote login) to operate successfully, the location originating the request and the destination of the request must be within the same Reachable Network. Some applications require the designation of a Gateway in order to function properly.

- Remote Maintenance
  The WaveStar® OLS 1.6T includes remote maintenance capabilities that allow the CIT to access all NEs in a maintenance subnetwork. This enables all operation, administration, maintenance, and provisioning functions to be performed on any NE within a maintenance subnetwork from any NE within the same subnetwork. NE to NE communication is performed over the Supervisory Data Link.
- OS Maintenance
  All NEs within a maintenance subnetwork are accessible via the EMS from any OS interface within the subnetwork. Routing of information is handled within the NE/OS interface software. Connectivity for all OS messages between NEs is through the Supervisory Data Links.

□

External Interfaces

Description The table below lists and briefly describes those external interfaces with which the user interacts. The following sections describe in greater detail each of these elements.

Table 2-1 External Interfaces

Interface	Location	Interface Type	Protocol
User Panel Display	External Interface Circuit Pack	5 LEDs	ON/OFF
User Panel Control	External Interface Circuit Pack	2 Buttons	ON/OFF
Office Alarms	Interconnection Panel	1 15-Pin DSUB Connector	Relay Closures
Equipment LEDs	Circuit Packs	2 LEDs	ON/OFF
OS Interface	Interconnection Panel	1 RJ-45 Connector	10BaseT
Orderwire	Interconnection Panel	2 25-Pin DSUB Connectors	Clock, Tx Data, Rx Data
CIT Interface	External Interface	1 RJ-45 Connector	10BaseT
Discrete Interfaces	Interconnection Panel	2 15-Pin DSUB Connectors	ON/OFF
Power Led	Power Fibers	1 LED	ON/OFF

□

User Panel

Introduction

The User Panel has two control buttons/switches, three alarm indicators, and three status indicators. One control button silences office alarms, and the other restarts the system software. Alarm indicators display the highest severity level of the current alarm conditions. Status indicators display the status of the Alarm cut-off, the presence of abnormal conditions on the NE, and if there are any current alarm or status conditions on the NE.

Diagram

The User Panel is located on the External Interface (EI) Circuit Pack and is visible from the front of the NE. Figure 2-2, “WaveStar® OLS 1.6T User Panel” (2-5), represents the External Interface User Panel. On an actual user panel, SONET labels are black, while SDH labels are shown in blue italics.

Figure 2-2 WaveStar® OLS 1.6T User Panel

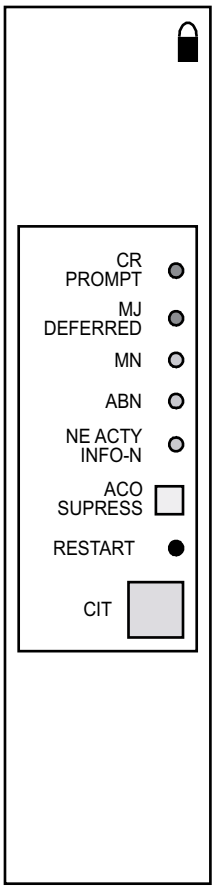

Control Buttons

Control buttons can be used to silence office alarms and restart the system software.

Alarm Cut-Off (ACO)/Suppress

The Alarm Cut-Off (ACO)/Suppress button turns off any audible office alarms. Once the ACO/Suppress button has been pressed, any subsequent alarmable conditions will activate the audible alarm again.

ACO alarm grouping prevents the dropping of the ACO for alarm and status conditions related to a particular object at a particular address. For example, if the user activates the ACO for a circuit pack failure condition, and then removes the circuit pack, the ACO should not drop when the alarm and status condition changes from ***CP failure*** to ***CP removed*** .

Restart (Reset) Switch

The Restart Switch restarts system software using the provisioned parameter values defined prior to the reset. A remote capability allows a Remote Reset to cause the local NE to Reset. This switch is recessed to avoid accidental activation.

Alarm Indicators

LED indicators designate that the Critical Alarm, Major Alarm, or Minor Alarm is active (including alarm testing) in the SONET environment. These LEDs are also used to indicate that the Prompt Alarm or Deferred Alarm is active (including alarm testing) in the SDH environment. The office audible and visual alarms are activated when any one of these indicators is activated.

Critical Alarm/Prompt Alarm

In the SONET environment, Critical Alarms indicate that a severe, service-affecting condition has occurred and immediate corrective action is imperative regardless of the time of day or day of week.

In the SDH environment, Prompt Maintenance Alarm (PMA) is generated to initiate activities (normally immediately) by maintenance personnel to remove defective equipment in order to restore good service and repair the failed equipment.

This LED is red and is labeled ***CR/Prompt***.

Major Alarm/Deferred Alarm

In the SONET environment, major alarms are used for hardware or software conditions that indicate a serious disruption of service or the malfunctioning or failure of important circuits. These troubles require

the immediate attention and response of maintenance personnel to restore or maintain system capability. The urgency is less than in critical situations because of a less immediate or impending effect on service or system performance.

In the SDH environment, Deferred Maintenance Alarm (DMA) is generated when immediate action is not required by maintenance personnel. For example,

- when performance falls below a set threshold, but the effect does not warrant removal from service
- when automatic changeover to stand-by equipment has been used to restore service

This LED is red, and is labeled ***MJ/Deferred***.

Minor Alarm

Minor alarms are defined only in the SONET environment and are used for troubles that do not have a serious effect on service to customers or for troubles in circuits that are not essential to NE operation.

This LED is yellow and is labeled ***MN***.

Status Indicators

Status indicator buttons alert the user of retired office audible alarms, alarm conditions, and abnormal system conditions

Alarm Cut-Off/Suppress LED

When lit, the green Alarm Cut-Off/Suppress LED indicates that an alarm condition exists, but the audible alert associated with the condition has been turned off. The LED is labeled ***ACO Suppress*** .

Abnormal/Abnormal LED

When lit, this yellow LED indicates an abnormal condition within the system. These conditions include maintenance activity on any NE within the system which could potentially cause service affecting failures if additional craft activity is performed within the system. The LED is labeled ***ABN/Abnormal***. Some examples of abnormal conditions are:

`FMM removal enable`

`Office Alarm disabled`

`Test Alarm in progress`

Activity-Near-End/Info-N Indicator

When lit, this yellow LED indicates that there is an alarm or status condition active on the local NE. This would include any condition identified, regardless of the alarm level. An alarm condition is one with a severity attribute of Critical (CR), Major (MJ), Minor (MN), Prompt, or Deferred. A status condition is one with an alarm attribute of NA, NR, No_Alarm, or No_Report. The NE-ACTY LED is lighted for both types of conditions.

Flashing LEDs

During initial software installation and when circuit packs are inserted into a running system, there will be an automatic upgrade of the firmware on the circuit packs to the latest version. Flashing green LEDs on the circuit pack faceplates will indicate that the upgrade is occurring (typically less than 30 seconds). Please DO NOT remove the circuit pack during this upgrade. Removing the circuit pack during upgrade may cause damage to the affected pack. When the pack LEDs stop flashing, you can remove the packs or power down the system as needed.

□

Power On LED

Location

A green Light Emitting Diode (LED), labeled ***PWR OUTPUT***, is located on each power filter on each shelf within a NE. When lit, this LED indicates that the corresponding filter is powered on. Each shelf has two (2) power filters.

Operation

The Power-On LED is extinguished:

- when power is not supplied through the filter to the shelf, OR
- if the low-voltage shutdown feature located on the power filter is activated, which then turns off power to the shelf

Monitor points on the power filters allow the incoming voltage to the filter to be measured.

□

Equipment LEDs

Fault LED (FAULT)

When continuously lit, this red LED indicates either a failure of its associated circuit pack or an on-board power failure. When flashing, it indicates a failure of an input to the associated circuit pack. The LED is labeled ***FAULT***.

Circuit Pack Active LED (ACTIVE)

When lit, this green LED indicates that the circuit pack is powered and is in the active state. The LED is labeled ***ACTIVE***.

ACTIVE LED as Not-In-Service Indicator

The WaveStar® OLS 1.6T software allows the Active LED (Green LED) on any circuit pack to be extinguished by issuing the appropriate command from the OS or the WaveStar® OLS 1.6T CIT. When issued, the corresponding slot declares a ***cp not-in-service indicated*** condition. The state of this LED remains independent of any other state of the NE until the appropriate command is issued to indicate that the circuit pack has returned to service, and a ***cp not-in-service indicated — cleared*** event is declared and the LED comes on.

A separate command is issued to determine all circuit packs indicating a ***not-in-service*** condition. A user can, then, remove the circuit from service on the system, and physically, remove and/or replace it without affecting service.

Fault/Active LED Behavior

The following describes the sequence of events that occur during a Circuit Pack and NE software boot cycle.

During Circuit Pack Software Boot Cycle

Circuit pack software starts when any circuit pack, except the BOS/SYSCTL, is inserted into a running NE. The sequence of events

is listed below. Each step begins only after the preceding one is completed.

1. The FAULT LED is on as the on-board software is loaded.
2. The ACTIVE LED lights when the software download to the circuit pack is completed and the software starts running. The LED remains lit as long as the bay is powered.
3. After the on-board software has been loaded, the FAULT LED remains on as the NE software is loaded. After the software is loaded and running, and determines the circuit pack is good, the FAULT LED extinguishes. If the circuit pack is faulty, the FAULT LED remains lit. If the software determines the circuit pack is good, but the incoming signal is determined to be failed, the FAULT LED begins to flash.
   The circuit pack is reported as booting as soon as it is inserted, and the FAULT LED lights. The circuit pack booting condition is cleared as soon as the circuit pack is determined to be good. There is no alarm clear delay for equipment faults.

During NE Software Boot Cycle

NE software boots when:

- office power is applied to the bay containing the BOS/SYSCTL circuit pack
- when the BOS/SYSCTL circuit pack in inserted, or
- when the user initiates a software restart with a command or push button

The ***FAULT*** LED and the ***ACTIVE*** LED behave as follows during a NE software boot:

1. The FAULT LED on the BOS/SYSCTL is on as the on-board software is loaded.
2. The ACTIVE LED on the BOS/SYSCTL lights when the software download to that circuit pack is completed and the software starts running. It remains lit until the NE software starts again or until the bay loses power. The FAULT LED on each of the BOS/BAYCTL and BOS/OCHCTL circuit packs lights when their on-board software begins to load.

3. The ACTIVE LED on each of the BOS/BAYCTL and BOS/OCHCTL circuit packs lights when the software download to that circuit pack is completed and the software starts running. It remains lit until the NE software starts again or until the bay loses power. The FAULT LED on each of the remaining circuit packs lights turns on as their on-board software is loaded.
4. The ACTIVE LED on each of the remaining circuit packs lights when the software download to that circuit pack is completed and the software starts running. It remains lit until the NE software starts again or until the bay loses power.
5. The FAULT LED on each circuit pack is extinguished when the Fault software resumes. If the circuit pack is faulty, it remains lit. If the circuit pack is good, but the incoming signal is determined to be failed, the FAULT LED begins to flash.

□

CIT-PC Interface

Provisioning

All externally provisionable parameters may be set using the WaveStar® OLS 1.6T CIT. The CIT provides the capability of copying provisionable parameters from one NE on the subnetwork to another NE on the subnetwork,, including the parameter that distinguishes between the SONET and SDH environments for setting alarm levels.

Maintenance

The user may perform maintenance functions from the WaveStar® OLS 1.6T CIT such as:

- initiate an alarm cut-off
- restart and initialize software
- inhibit alarms to the Office Alarm Grid, OS, and telemetry interfaces, either as a whole or separately
- operate/release external controls
- operate/release the Not-In-Service indicator

Reports

The following reports are available to the WaveStar® OLS 1.6T CIT:

- Autonomous condition reports
- On-demand retrieval operations
- All alarm reports within the maintenance subnetwork
- Log retrieval reports

The date format for all reports is provisionable to distinguish between SONET (YY-MM-DD) and SDH (DD-MM-YY) environments.

Testing

The WaveStar® OLS 1.6T CIT is capable of performing the following tests:

- NE self tests using the TEST-AUTO-LOCAL command.
- LED tests, which apply to LEDs on all circuit packs and equipment, using the TEST-LED command. When activated, all LEDs turn ON for 10 seconds, OFF for 10 seconds, and return to normal operation.

- Office alarm tests to determine the proper operation of Office Alarm Interfaces for the NE. The TEST-ALM command is used.
- Momentarily (300 ms) or continuously activate and release miscellaneous discrete control points using the OPR/RLS-EXT-CONT command.

□

Office Alarms

Interfaces

CR/Prompt, MJ/Prompt, MN/Deferred Alarms

There is a set of contact closures for CR/Prompt, MJ/Deferred, and MN alarms, for both audible and visual alarms. When multiple conditions with two or more different alarm attributes are active, only the highest level alarm with be active (both audible and visual). When the highest severity alarm has been cleared, the next highest alarm, if any, will be activated (both audible and visual).

Contact Closures

Alarm relays are in a closed state when the corresponding alarms are activated, and are open when the alarm is cleared.

CR/Prompt, MJ/Prompt, and MN/Deferred Fail Safe

The CR/Prompt and MJ/Deferred alarm relays have normally closed contacts so that in the event of a total power failure to the controller shelf, the relays will close and result in dual local office alarms. The MN alarm relay has normally open contacts.

Operational Capabilities

Clearing Alarms

If all previous alarms have been silenced via Alarm CutOff (ACO) (audible indication only) and if a new alarm condition occurs, the ACO will be cleared and the highest level alarm activated.

Alarm Suppression

Alarm relay contact closures may be isolated from the Office Alarm Grid/Station to permit maintenance activities on the NE without activating new alarms. Suppression of alarm indications to the OS interfaces is also supported.

Functional Testing

The WaveStar® OLS 1.6T terminals provide the ability to exercise the functioning of audible and visual alarms. When the test is initiated, the LED alarm indications on the NE light, and the alarm relays on the NE operate, causing local office audible and visual alarms to activate. Any single alarm, or all alarms, may be exercised. The number of times the alarms can be exercised is selectable from between one and ten times.

□

Miscellaneous Discrete Interfaces

Overview

The WaveStar® OLS 1.6T system offers Miscellaneous Discrete Interfaces (MDI).

Inputs

Contact closures from external switches and/or relays are connected across the input environmental points.

Outputs

Output control points are contact closures.

Physical Locations

The Miscellaneous Discrete Interfaces reside within the NE

Internal Environmental and Control Points

Number of Interface Points

The WaveStar® OLS 1.6T system NEs provide 16 internal miscellaneous discrete environmental input points, and four internal miscellaneous discrete control output points.

MDI Input Operation

The WaveStar® OLS 1.6T system senses any individual contact closure for the environmental input points, and notifies the OS/CIT with an appropriate message that has been provisioned.

MDI Output Operation

The OS/CIT activates/releases any control output point.

MDI Labeling

Each point is uniquely labeled by the software for OS/CIT requests, responses, and notifications.

Provisioning Environmental and Control Points

Provisionable Alarm Levels

The alarm severity level for each of the miscellaneous discrete environmental points is provisionable.

Operational Capabilities

The following capabilities are available:

- The state of the environmental points is available as message-based OS messages and are reported on demand at the CIT and OS Interfaces.
- The control points are operated and released from the CIT and OS interface.
- If the NE experiences a RESET, the states of the environmental and control points remain unaffected.
- All discretes are provisioned with their values upon initialization. Alarms are given an original value of MN.
- When an environmental point is activated, a notification is sent to the OS. When the point returns to its initial state, a notification is sent to the OS.

□

TL/1 OS Interface

Commands

The WaveStar® OLS 1.6T has a TL/1 application level OS port interface with a full set of TL1 OS commands.

Important! There may be more than one OS-NE TL1 interface. NEs within a maintenance subnetwork directly connected to the OS are called ***Points of Attachment***.

Communications and Application Protocols

The WaveStar® OLS 1.6T OS port TL1 interface is transported over the network as follows:

1 The Interface communications protocol is OSI or TCP/IP.

2 The Interface application (message) protocol is the full set of 1.6T TL1 messages. This includes both input commands and responses (solicited outputs), and autonomous outputs (alarms and events).

3 The message interface provides proper syntax and error checking of TL1 commands that have been input.

NE-to-NE Interworking

NE-to-NE communications are implemented over the Supervisory Data Link. Remote maintenance activity, OS communications through the Point of Attachment, remote alarm and activity condition reporting, and system provisioning use the communication channel capability in the Supervisory Data Link to interwork NEs.

Point of Attachment

Since any WaveStar® OLS 1.6T terminal can connect to the OS through the OS interface, any 1.6T terminal within a maintenance subnetwork can be a Point of Attachment. Repeaters, however, cannot be a Point of Attachment.

The Point of Attachment supports a TID/NSAP mapper to allow the routing of messages to other NEs via TL1 over TCP/IP interface in a maintenance subnetwork. The OS messages use TIDs to designate the destination NE, but NSAP addresses are used within the OSI-based Supervisory Data Link.

An ENT-SYS (or PROV-SYS) command must be used to provision the TCP/IP parameters if operations is on a TCP/IP network. ENT-OSI (or PROV-SYS) must be used to provision the OSI parameters in the NE. The ENT-SYS (or PROV-SYS) and ENT-OSI (or PROV-SYS) commands can be executed from a CIT connected anywhere within the maintenance subnetwork. No other provisioning of a Point of Attachment is required.

Message Handling in Subnetworks

Once Login Session interaction between the OS and NE has been established (using the ACT-USER TL/1 command), autonomous TL/1 messages from the NE to the OS can be allowed or inhibited at a login session basis only, not on a NE-wide basis.

□

Orderwire

Purpose

There are three Orderwire circuits, each operating at 64 kb/s. These circuits are provided to the user via two connectors on the Interconnection Panel.

External Access

The Orderwire functionality is provided by an external orderwire shelf. The interface to the shelf is provided through the interconnect panel.

Features and functionality for the orderwire are provided through an external orderwire terminal, such as the Dantel Orderwire Shelf.

Signals

The appropriate signals, such as transmit clock, transmit data, receive clock, and receive data, are provided to the external shelf in order to implement the full complement of orderwires.

Provisioning

Each Orderwire can be provisioned to be either express or local at each NE as required. Each orderwire is initially provisioned to be local.

□

Supervisory Channel

Purpose

The Supervisory Channel provides the communication channel between End Terminals, Repeater Sites, Full WAD Sites, and Limited WAD Sites. A CEPT1 (2048 kb/s signal, 30-64 kb/s channels) is used for the Supervisory Signal carried on a 1510 nm optical signal.

Operation

The Supervisory Signal operates as follows:

1 There are up to two Supervisory (SUPVY) Signal provided for each DWDM system.

2 The SUPVY Signal carries the following components:

1. ***Two SUPVY Data Links (DL) operating at 768 kb/s each***.
   These data links are used for message-based control system communications between NEs.
   One data link is terminated at each NE.
   The other data link is provisionable, and can terminate at specific NEs and express through other NEs.
2. ***Three Orderwire circuits operating at 64 kb/s each.*** These circuits are provided to the user via connectors on the Interconnect Panel. Each Orderwire is provisionable to be express or local, based on local requirements.
3. ***Three channels of 64 kb/s each***are reserved for future use.

3 The SUPVY Signal operates at a rate of 2.048 Mb/s and is formatted according to the standards for an E1 signal with respect to framing, CRC error monitoring, and channel numbering (time slot assignments).

4 The individual SUPVY Signals are not protected at this time.

5 The fixed and provisionable SUPVY Data Links are not protected at the physical layer. The message traffic passing through a given SUPVY DL is protected by the routing software of the OSI or other communications protocol stack.

Interface

The Supervisory Signal terminates on the SUPVY circuit pack plug-in. Up to two Tx and two Rx terminations can be accommodated within a single SUPVY plug-in. In 2-fiber applications, 1 Tx and 1 Rx terminal serves End Terminals. At Repeater Sites, Full WAD sites, and Limited WAD sites, 2 Tx and 2 Rx are needed.

□

Miscellaneous Operation

Time of Day Clock

The WaveStar® OLS 1.6T maintains a Date and Time of Day clock.

Purpose

This clock is used to time stamp events, such as the reporting and clearing of alarm conditions, and interactions with the OS.

Setting Date and Time

The Date and Time are set via the CIT/OS.

□

3 WaveStar® OLS 1.6T CIT

Overview

Purpose

This chapter provides information on the hardware and software requirements for Lucent Technologies' WaveStar® OLS 1.6T CIT application software. It also provides an overview of the WaveStar® OLS 1.6T CIT and location of the interactive tutorial.

Related Information

The following documents provide related information:

- ***Software Release Description*** (Comcode 109154401)
- ***Operations Systems Engineering Guide*** (365-575-788)

□

WaveStar® OLS 1.6T CIT Requirements

PC Requirements

Most customers dedicate a lap-top personal computer (PC) to run the WaveStar® OLS 1.6T CIT applications software. However, a properly configured PC will also suffice. See the ***Software Release Description*** for the requirements for the customer-provided PC.

A WaveStar® OLS 1.6T PC may be loaded with multiple and different releases of the CIT application software. This may be necessary when using a single PC to connect to multiple spans or systems that are using different releases of NE software, or to multiple/different WaveStar® OLS 1.6T products. However, multiple versions of the CIT will ***not*** run at the same time. One version must be exited prior to starting another version. The WaveStar® OLS 1.6T CIT application software is only available on CD-ROM media.

WaveStar® OLS 1.6T CIT Applications Software Overview

Some service providers prefer to centralize most of their network operations and to have those centralized functions performed at a work center.

Provisioning, alarm analysis, and trouble shooting, are three functions that may be centralized. Only those functions that require actual changes to the hardware are decentralized (for example, installation and repair).

Communication

The PC connects to the WaveStar® OLS 1.6T network via a 10 Base-T LAN cable. The figure below depicts a direct connection using a short cable (cross-over cable) to connect directly into the front of the user panel. The communication protocol between the WaveStar® OLS 1.6T CIT and the NE is mostly the TL1 messages.

In addition to the CIT direct connection to the NE, the WaveStar® OLS 1.6T CIT supports the remote access to the NEs that are connected in the maintenance sub network via both a dial-up and direct LAN connection. The CIT remote dial-up and direct LAN

access are supported only via the OS LAN port of the NE. The OS LAN port supports a 10 Base T physical interface.

Figure 3-1 WaveStar® OLS 1.6T CIT with Direct Connection to the NE User Panel

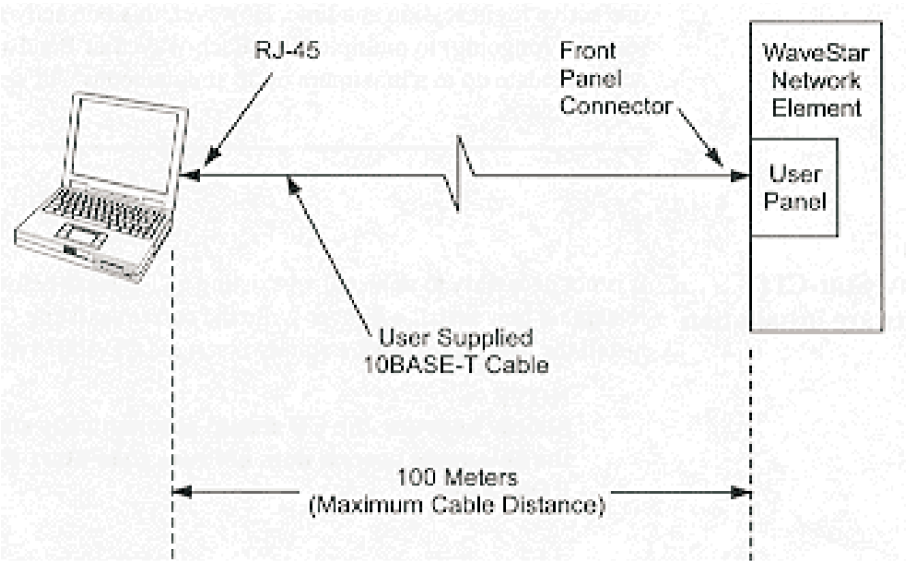

□

WaveStar® OLS 1.6T CIT Tutorial

Tutorial A detailed interactive tutorial can be found on the WaveStar® OLS 1.6T NE and CIT CD-ROM.

□

4 Provisioning

Overview

Purpose Provisioning is the assigning of values to parameters used by network elements for specific functions.This chapter describes the principles of provisioning the WaveStar® OLS 1.6T. Procedures for specific provisioning tasks are documented in Chapters 9-14 of this manual, as well as in the WaveStar® OLS 1.6T Installation Guide (365-575-784).

□

Introduction to Provisioning

What is Provisioning?

Provisioning is the process of assigning values to parameters in memory which determine the operating characteristics of the system. Each provisionable parameter has a factory supplied original value when software is first loaded into a Network Element (NE). These values become the current value upon launching the software. The current values are the values used by the system.

Methods of Provisioning

There are two methods of provisioning that are distinguished from one another by the ways in which they are done and undone:

- ***Auto-Provisioning*** — Done by adding good signals to the NE; undone (changing a value) by changing the signals that are applied to the network element, and then executing the UPDATE function.
- ***Technical Provisioning*** — Done by entering provisioning commands; undone by repeating the previous provisioning operation using a different value.

Provisioning Inconsistencies

Some combinations of parameter values that are set using Technical Provisioning may be mutually incompatible. Although Technical Provisioning commands are not denied if they would result in a provisioning inconsistency, these inconsistencies are reported with appropriate alarms and reports. The user is then directed by the Trouble Clearing Procedures to clear the condition by changing one or more of the affected parameter values.

□

OTU Port-Provisioning

Description

The only auto-provisionable WaveStar® OLS 1.6T ports are OTU IN and client ORS IN ports with associations indicating that they receive their inputs directly from sources outside the network element, and that also have the corresponding OTU OUT or ORS OUT ports involved in a supported type of association. Port provisioning involves both auto-provisioning and technical-provisioning as described in a later section.

Port Auto-Provisioning

There are three possible port states:

- Automatic
- Monitored
- Not Monitored

Auto-provisioning of the OTU IN ports is described here:

- The original value of each OTU IN port is Automatic.
- An Automatic port becomes Monitored when a good signal is found to be present.
- A Monitored port becomes Automatic when UPDATE is executed if a good signal is not present.
- An Automatic or Monitored port becomes Not Monitored when set to that value by executing the technical provisioning command ENT-OTPS.
- A Monitored or Not Monitored port becomes Automatic when set to that value by executing the technical provisioning command ENT-OTPS.
- A port becomes Automatic when either of the associations involving the port is deleted by the DLT-ASSOC-OTU command.
- If a good incoming signal is present at a port when the appropriate associations are entered, the port immediately becomes Monitored.

If a terminating circuit pack is faulty or has been removed, an Automatic port will not become Monitored regardless of the state of the incoming signal, and UPDATE causes no change to that slot's associated port states. This means that a failed circuit pack never updates the database. Technical provisioning commands (ENT-OTPS) can still set a port to Automatic or Not Monitored at any time,

regardless of the health or auto-provisioned state of the terminating slot. Not Monitored ports are not affected by the UPDATE command.

□

Technical Provisioning

Description

Technical Provisioning is the process by which system parameters are set (provisioned) using a series of user-entered commands.

All technical provisionable parameters, their allowed values, and their original values are documented in the applicable TL1 command pages found in the ***WaveStar® OLS 1.6T Operations System Engineering Guide*** (365-575-762).

□

Provisioning Interactions with Maintenance

Instantiating Slots

Maintenance activities are affected by Network Element Type (NETYPE) provisioning and OTPS provisioning. Specifically, common slots are instantiated by provisioning the NETYPE, and per-channel slots are instantiated by provisioning OTPS associations.

The following slots are instantiated by the NETYPE parameter:

- BOS — System Controller
- BOS — Overhead Controller
- EI
- OA
- ODU1, ODU1C, ODU21
- OMON
- OMU1, OMU1L
- SUPVY
- WAD
- BOS — Bay Controller in bays containing any of the above circuit packs.

The following slots are instantiated by OTPS associations:

- ODU2, ODU2C, ODU3, ODU22
- OMU2
- ORS
- OTU
- BOS — Bay Controller in those bays containing any of these circuit packs, but none of those packs listed in the NETYPE list.

Maintenance Implications

Refer to Table 4-1, “Slot-Related Reports Affected by NETYPE and OTPS Associations” (4-7) for information about how the instantiation of slots by the two kinds of provisioning affects Retrieve-Equipment and Retrieve-Alarm reports.

Table 4-1 Slot-Related Reports Affected by NETYPE and OTPS Associations

Report	Common Slots	Slots That Can Be Addressed by OTPS Associations		Other Slots
		Association Exists	No Association	
RTRV-EQPT: reports slot if CP present	YES	YES	YES	no
RTRV-EQPT: reports slot if CP absent	no	no	no	no
RTRV-ALM: CP removed	YES	YES	no	no
RTRV-ALM: CP failed	YES	YES	YES	no
RTRV-ALM: unexpected CP type	YES	YES	YES	no
RTRV-ALM:CP (unknown type) removed	no	no	no	no
RTRV-ALM: CP (unknown type) failure	YES	YES	YES	no
RTRV-ALM: no CP expected in slot	no	no	no	YES

Incoming Signal Maintenance

OTU IN and client ORS IN ports receiving inputs (from an external source) are the only auto-provisioned entities within the system. All other entities are provisioned by technical-provisioning. Maintenance of signals from the outside world is controlled by OTU IN port states. Maintenance of signals between common slots is controlled by the provisioned NETYPE. Maintenance of signals going to and/or coming from slots that are created by OTPS Associations is controlled by the presence or absence of OTPS associations.

□

Provisioning Guidelines

Parameters to Provision for Network Partitioning

The user must have knowledge of the capability limits for partitioning large networks to properly plan and engineer the provisioning of Level 2 Intermediate Systems (ISs) and area addresses of the Network Service Access Points (NSAPs). The following provides a summary of the WaveStar® OLS 1.6T provisionable parameters and the associated network limit capability:

- NSAP Provisioning - The WaveStar® OLS 1.6T uses a variable length area address. The user can provision the area address portion of the NSAP for the routing purpose. Changing the value of the NSAP is a provisioning change, but can affect communications within a subnetwork. The ENT-OSI (or PROV-SYS) is used for provisioning the area address (for example, LOCALADDRESS parameter in TL1) portion of the NSAP. Execution of this command resets the overhead controller of the Terminal or reboot the system controller in the case of the Repeater.
- Express and Local Supervisory Data Link (SDL) Provisioning - Each local SDL must be terminated at each Level 1 IS node and express SDL may be used to connect the Level 2 nodes to establish adjacency with each other by skipping the nodes between them to form a single Level 2 domain as illustrated in Figure 4-1, “Use of Express Datalink to form a Single Level 2 Routing Domain” (4-9). The use of the express SDL can significantly reduce the number of hops between the nodes by skipping the Level 1 nodes in between. The ENT-SUPR is used to provision the local and express SDLs in a specified network element.

Figure 4-1, “Use of Express Datalink to form a Single Level 2 Routing Domain” (4-9) below shows two (2) SNMS systems connected to an OLS network which has been configured into three (3) separate OSI areas. All Level 1 nodes are connected via the local

SDL and all Level 2 nodes are joined together via the express SDL to form a single Level 2 domain

Figure 4-1 Use of Express Datalink to form a Single Level 2 Routing Domain

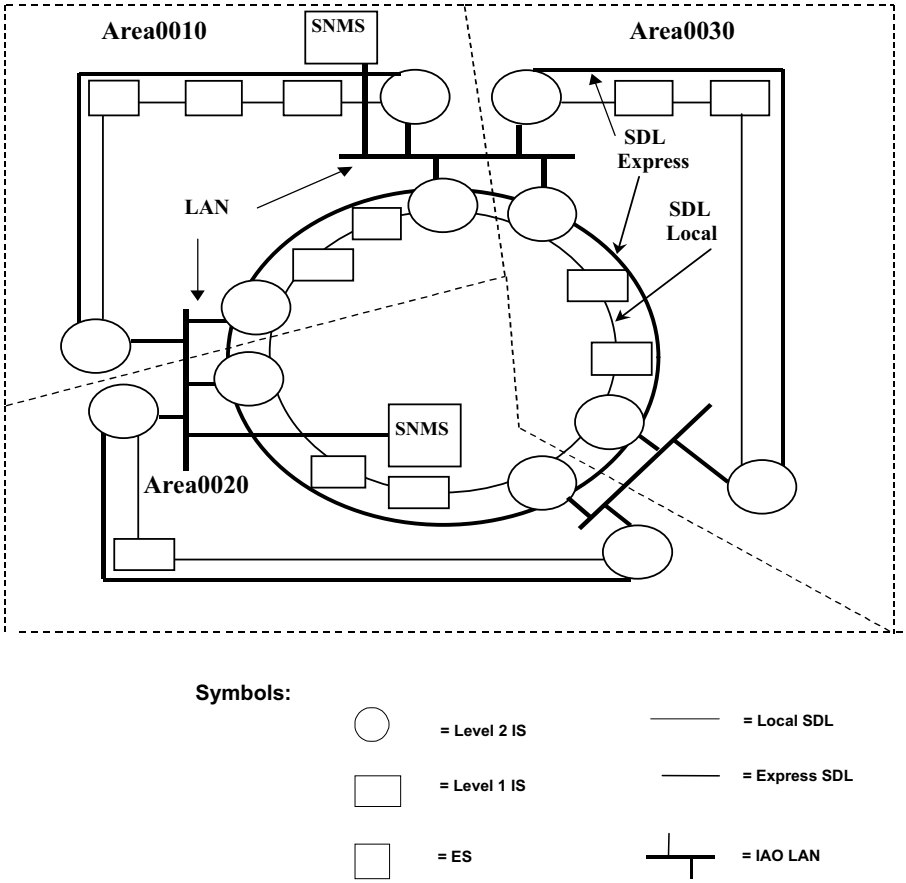

Parameters, Values, and Limits

Refer to the ***WaveStar® OLS 1.6T Operations Systems Engineering Guide*** (365-575-762) for detailed information on the input and output parameters of the TL1 messages supported by the NE. Refer to the WaveStar OLS 1.6T Installation Manual (365-575-790) for actual instructions on how to provision a WaveStar OLS.

□

Using the CIT to Provision Circuit Connections

Add/Drop Optical Channels

As noted previously, provisioning is the assigning of values to parameters used by network elements for specific functions. Within the WaveStar® OLS 1.6T system, the CIT is used to create associations to add/drop wavelengths to/from OTUs and through-OTUs in the system. Refer to Chapter 11, Circuit Order Tasks , for procedures on how to add or delete optical channels. A tutorial for the CIT may be found in the online help that accompanies this optical product. The following provides a high-level summary of CIT provisioning functions.

There are three main types of Circuit Connection operations: ***Creating a New Circuit Connection***; ***Removing an Existing Circuit Connection,*** and ***Viewing an Existing Circuit Connection.***

To create a circuit, it is necessary to create associations between the various pieces of equipment that comprise the circuit. The CIT provides a step-by-step equipment selection process for creating these associations. The user is prompted to select the first piece of equipment in the circuit and is then subsequently prompted to select each additional piece of equipment until a complete circuit has been created. The tool that the CIT provides to perform this function is the Circuit Connection Wizard. The Wizard enables the user to only select equipment that is compatible with the previous equipment selection, thus ensuring compatible circuit types.

The CIT also provides the capability of creating associations using the “cut -through” mode. In cut-through mode, the user needs to use TL1 commands to create circuit associations.

The Circuit Connection provisioning operation is a three-part process: Software Provisioning Interaction between the CIT and the NE, Verification process utilizing Optical Power readings to verify software interaction was successful, and the actual physical connection of fiber between circuit packs.

The Software Provisioning Interaction is done by the Circuit Connection Wizard. The result of this provisioning is to activate the laser in the OTU. With no input to the OTU the output of a provisioned OTU will be an Alarm Indication Signal (AIS). More information on AIS is provided in Chapter 5, “Performance Monitoring”.

□

5 Performance Monitoring

Overview

Purpose The WaveStar® OLS 1.6T system performance monitoring philosophy includes proactive maintenance (performance management). The system detects and reports performance degradation before it deteriorates further and causes service-affecting alarm conditions.

Features The WaveStar® OLS 1.6T system provides the following performance monitoring features:

- OTU performance parameter monitoring
- Strong Forward Error Correction digital parameter monitoring
- Support for Supervisory Channel E-1 format digital parameters
- Setting of high and low thresholds associated with provisionable PM parameters
- Retrieve thresholds (high or low) associated with provisionable PM parameters
- Transmit Threshold Crossing Alerts (TCAs)/Quality of Service (QOS) warning messages autonomously
- Clear Threshold Crossing Alerts/warning messages
- Retrieve PM and threshold data per accumulation time intervals
- Specify date and time of day clocks for performance monitoring
- Initialize PM registers associated with all digital parameters
- Monitor and report per channel PM data

- Optical signal power parameters for OLINE, SUPR, and OCHAN
- TCA/QOS alarm messages retrievable using RTRV-LOG/TL1
- Multiple thresholds (high and low) for analog parameters

□

Performance Measurements

Overview

Purpose

This section provides information on the various circuit pack performance measurements.

Description

The WaveStar OLS 1.6T System measures optical signal power degradation and equipment aging and/or failures at various input/output levels by circuit packs/devices. For example:

- The OA circuit pack measures performance for the optical line as well as the optical parameters for the Supervisory (SUPVY) Signal
- The OMON circuit pack monitors the performance for each optical channel
- The OTU circuit pack monitors the SONET/SDH B1 parity errors for the incoming OC-48/STM-16 and OC-192/STM-64 signals
- The SUPVY circuit pack monitors the performance of the Supervisory Channels

Circuit Pack Removal

Once a circuit pack has been removed, digital performance data that has been stored and that is associated with the removed circuit pack is discarded by the system.

PM Response for Current Data

Any time the PM response for current data does not match the current date and time, there is a reason for this anomaly. The PM response for current data has the date and time set to the date and time when the current bin started (beginning of monitored time). If the network element date or time is changed somewhere around the boundary of the bin roll over, the current bin will roll over only at the end of the next time period. For digital parameters, this is evident if the monstat is set to PRTL. There is no way of identifying this for analog parameters.

If the System Date is changed the PM current bin values are disrupted. PM current bins will report correct values only after the end of the next time period. For further confirmation, please do a RTRV-LOG/TL1.

□

OA Circuit Pack Performance Measurements

Introduction

The Optical Amplifier (OA) circuit packs have on-board pump lasers which amplify the multi-wavelength signal for transmission onto the optical fiber. Each OA provides uniform gain for each operating channel independent of the number of channels in use, or the bit rate of the channel.

The OA circuit pack checks:

- the total input power to the OA for detection of line failures
- the total output power of the OA for detection of OA failures
- the efficiency of the OA pump lasers for performance degradation

Important! The SUPVY Signal does not appear on either the MON RX port or the MON TX port on the OA. The Optical Monitoring Ports (MON RX, MON TX) on the OA allow per-channel monitors by either connecting a separate OMON circuit pack or by connecting an Optical Spectrum Analyzer (OSA) provided by the customer.

Monitored Parameters

Parameters that are monitored and measured at the OA packs are:

- Total input Optical Power Received (TOPR-OL)
- Total output Optical Power Transmitted (TOPT-OL)
- Pump Laser Efficiency — Receive Pump 1 through 6 (PLE-RP1-6)
- Pump Laser Efficiency — Transmit Pump 1 through 6 (PLE-TP1-6)
- Signal Power Received by Supervisory Channels (SPR-SU)
- Signal Power Transmitted by Supervisory (SPT-SU)

□

SUPVY Circuit Pack Performance Measurements

Introduction

The SUPVY circuit pack taps and measures the Supervisory Channels sent between OAs. Supervisory Channel inputs and outputs are provided on the OA which allows the user to provide remote system operations, such as performance maintenance and provisioning. These activities are performed using TL1 commands through an OS or local Craft Interface Terminal (CIT) using a personal computer.

Monitored Parameters

The following Digital Parity Errors are monitored and reported for Supervisory Signals:

- Cyclical Redundancy Check (CRC Checksum errors)
- Errored Seconds (ES)
- Bursty Errored Seconds (BES)
- Severely Errored Seconds (SES)
- Unavailable Seconds (UAS)

Important! Digital parameters CRC, ES, BES, SES, and UAS are monitored at the Supervisory circuit pack, while Optical Parameters SPR-SU and SPT-SU are monitored at the OA circuit pack.

□

OC-48/STM-16 OTU (OTU1) Performance Measurements

Introduction

The OC-48/STM-16 OTU (OTU1) monitors and stabilizes the transmitted wavelength. To isolate faults on the incoming OC-48/STM-16 line, the OTU monitors the overhead B1 Parity Errors without altering the signal's contents.

Monitored Optical/Analog Parameters

The optical/analog parameters that are monitored, measured, and reported by the OC-48/STM-16 OTU (OTU1) are:

- Optical Power Received
- Laser Bias Current
- Optical Power Transmitted

Monitored Digital Parameters

The following digital parameters are monitored:

- B1 Coding Violation Counts
- Errored Seconds
- Severely Errored Seconds
- Severely Errored Frame Seconds

□

OC-192/STM-64 with FEC OTU (OTU30) Performance Measurements

Introduction

The OC-192/STM-64 OTU with FEC (OTU30) monitors the overhead B1 Parity Errors (without altering the signal's contents) in order to isolate faults on the incoming OC-192/STM-64 line.

Monitored Optical/Analog Parameters

The optical/analog parameters that are monitored, measured, and reported by the OC-192/STM-64 OTU with FEC (OTU30) are:

- Optical Power Received
- Laser Bias Current
- Optical Power Transmitted

Monitored Digital Parameters

The following digital parameters are monitored:

- B1 Coding Violation Counts
- Errored Seconds
- Severely Errored Seconds
- Severely Errored Frame Seconds

The SONET/SDH performance parameters are unavailable during OCH Path FDI or OCH Client FDI since the SONET/SDH payload may be improperly formatted during these conditions (due to defects in the upstream FEC10G device).

Monitored FEC Parameters

For an incoming OCh10G signal, the following parameters are monitored:

- FEC Error Count
- FEC Uncorrectable Block Count

The FEC performance parameters are unavailable during incoming OCH Path FDI since the incoming OCh-TC-AIS signal may contain frame slips. (Note that these frame slips are the result of the defect in the upstream FEC10G device.)

□

HSBB OTU (OTU40) Performance Measurements

Monitored Analog Parameters

The optical/analog parameters that are monitored, measured, and reported by the High-Speed Broadband (HSBB) OTU (OTU40) are:

- Optical Power Received
- Laser Bias Current
- Optical Power Transmitted

□

4:1 10G Multiplex OTU (OTU70) Performance Measurements

Introduction

The 4:1 10G Multiplex OTU (OTU70) supports LOS/LOF monitoring detection/reporting. At the source-side, the OTU70 will detect LOS and client (STS-48) LOF for each OC-48/STM-16 input. When a LOS or LOF is detected on one of more of the OC-48/STM-16 inputs, then the OTU70 inserts a keep-alive signal for the failed or absent channels. LOS or LOF conditions on any of the OC-48/STM-16 inputs to the OTU will not cause a loss of the remaining good channels. As with other OTU circuit packs, the OC-48/STM-16 outgoing optical signals are shut off in the event of a OTU circuit pack failure.

User-provisioned J0 Section Trace 16-byte format (for tracing, reading, and comparing) and 64-byte format (reading only) is supported in Release 6.1. This capability is applicable for each of the four input ports in the source direction and each of the four output ports in the sink direction on a per-port basis. For the 16-byte format only, the J0 Section Trace string (STI) is provisionable, and comparison is made between the received and the expected J0 Section Trace string. Also new in Release 6.1 is support for user-provisioned OCh WaveWrapper Path Trace Identifier (OJ3) mismatch detection in the sink direction of the 10G MUX; a health check for LambdaRouter Interworking; and support for tone-trace on the 4:1 10G MUX that allows a user to operate and release tone trace on the line side output port of the 10G MUX.

The 4:1 10G Multiplex OTU does not transmit an OC192 J0 16-byte string.

Monitored Analog Parameters

The optical/analog parameters that are monitored, measured, and reported by the 4:1 10G Multiplex OTU (OTU70) are:

- Optical Power Received
- Laser Bias Current
- Optical Power Transmitted

Monitored Digital Parameters

The following digital parameters are monitored:

- B1 Coding Violation Counts
- Errored Seconds

- Severely Errored Seconds
- Severely Errored Frame Seconds

The SONET/SDH performance parameters are unavailable during OCH Path FDI or OCH Client FDI since the SONET/SDH payload may be improperly formatted during these conditions (due to defects in the upstream FEC10G device).

Monitored FEC Parameters

For an incoming OCh10G signal, the following parameters are monitored:

- FEC Error Count
- FEC Uncorrectable Block Count

The FEC performance parameters are unavailable during incoming OCH Path FDI since the incoming OCh-TC-AIS signal may contain frame slips. (Note that these frame slips are the result of the defect in the upstream FEC10G device.)

□

OMON Circuit Pack Performance Measurements

Introduction

Per Channel performance is monitored at least once every 15 minutes in order to detect degraded performance of the system. The OMON Circuit Pack's internal Optical Spectrum Analyzer (OSA) determines channel presence and signal power for each channel.

Monitored Parameters

Per-channel performance parameters that are monitored, measured, and reported by the OMON circuit pack are:

- Signal Power Transmitted (SPT-C)
- Signal Power Received (SPR-C)

□

Performance Data Processing

Overview

Purpose This section provides information on obtaining and setting operational values to use as a point of reference for optical parameter measurements.

□

Baselining Optics

Overview

Baselining is defined as measuring the current power level of a performance parameter and saving it as the expected nominal operational value for that parameter. The purpose of a baseline value is to provide a basis from which to measure deviations from the nominal. Baseline values are established automatically or manually

Baselining optical power levels is done automatically through a User Command (Manual Baselining or Re-Baselining), and applies to provisionable parameters.

□

Automatic Baselining

Description

Automatic Baselining establishes a reference power level for optical analog parameters at the time of baselining. If necessary, these parameters can be re-baselined using TL1 commands

When Automatic Baselining Occurs

The WaveStar® OLS 1.6T performs automatic baseline in the following situations:

- Initial system installation
- The addition of a single, bidirectional optical channel to an optical line
- The deletion of a single, bidirectional optical channel from an optical line

Important! Automatic baselining is not required after replacing an OA, ODU, OMU, OTU, or Supervisory circuit pack.

Initial System Installation

Following an initial system installation, automatic baselining is performed on the following parameters:

- TOPR-OL
- TOPT-OL
- SPR-SU
- SPT-SU

Important! The WaveStar® OLS 1.6T does not automatically rebaseline a parameter upon system initialization once it has been baselined.

Add A Single Optical Channel

Automatic baselining will be performed after a new optical channel has been added.

The following parameters are automatically baselined:

- TOPR-OL for the optical amplifier
- TOPT-OL for the optical amplifier
- If there are eight (8) or more channels present in the line after the addition of the new channel, the following parameters are automatically baselined:
  - SPT-C for the ***newly*** added optical channel
  - SPR-C for the ***newly*** added optical channel

- If there are fewer than eight (8) channels present in the line after the addition of the new channel, the following parameters are automatically baselined:
  - SPT-C for ***all*** optical channels except those with active LOS or AIM conditions
  - SPR-C for ***all*** optical channels except those with active LOS or AIM conditions

Important! Any channel with an active LOS or AIM condition is not automatically baselined.

Delete a Single Optical Channel

Automatic baselining will be performed when an optical channel has been deleted.

The following parameters are automatically baselined:

- TOPR-OL for the optical amplifier
- TOPT-OL for the optical amplifier
  If there are eight or fewer channels present in the optical line before the deletion of the channel, the following parameters are automatically baselined:
  - SPT-C for ***all*** optical channels except those with active LOS or AIM conditions, and
  - SPR-C for ***all*** optical channels except those with LOS or AIM conditions

□

Manual Baselining

Baselining Commands

Manual Baselining is performed at the user's discretion through the CIT graphical user interface, or through "Cut Through" mode with TL1 commands. The TL1 baselining commands for manual baselining are:

- SET-BASELINE-OLINE
- SET-BASELINE-SUPR
- RTRV-BASELINE-OLINE
- RTRV-BASELINE-SUPR
- SET-BASELINE-OCHAN
- RTRV-BASELINE-OCHAN
  Important! Baselining needs to be done at all NEs that this line, OChan, or SUPVY pass through.

Refer to Table 5-1 for a list of conditions under which manual baselining can be performed.

Table 5-1 User Commands for Manual Baselining

Performance Parameter(s)	**TOPR-OL OTPT-OL**	**SPR-SU SPT-SU**	**SPR-C SPT-C**
CIT PC User Commands	**SET-BASELINE-OLINE RTRV-BASELINE-OLINE**	**SET-BASELINE-SUPR RTRV-BASELINE-SUPR**	**SET-BASELINE-OCHAN RTRV-BASELINE-OCHAN**
A new system is installed	Yes	Yes	Yes
A previously installed OA is replaced	Yes	Yes	Yes
A SUPVY circuit pack is replaced	—	Yes	—
An OMON circuit pack is added/installed	—	—	Yes
A new channel is provisioned	Yes	—	Yes
An existing channel is removed	Yes	—	—

Table 5-1 User Commands for Manual Baselining (continued)

Performance Parameter(s)	**TOPR-OL OTPT-OL**	**SPR-SU SPT-SU**	**SPR-C SPT-C**
CIT PC User Commands	**SET-BASELINE-OLINE RTRV-BASELINE-OLINE**	**SET-BASELINE-SUPR RTRV-BASELINE-SUPR**	**SET-BASELINE-OCHAN RTRV-BASELINE-OCHAN**
User specified Reason Codes (0-9)	Yes	Yes	Yes

Notes:

1. "—" in a table cell represents "Not Applicable."

Important! Baselining is independent of external equipment, such as when an Optical Spectrum Analyzer (OSA) is added or installed.

□

Performance Parameters

Overview

Purpose This sections provides information on the various performance parameters that the system supports. Knowledge of these parameters can be of assistance during trouble clearing procedures.

□

Supported Parameters

List of Parameters

is a list of all performance parameters supported by the WaveStar® OLS 1.6T.

Table 5-2 Supported Performance Parameters

Monitor for	Monitor at	Direction	Type	PM Parameter	Full Parameter Name	Type
Optical Line	OA	Receive	Analog	TOPR-OL	Total Optical Power Received	1
		Transmit	Analog	TOPT-OL	Total Optical Power Transmitted	1
		Receive	Analog	PLE-RP1-6	Pump Laser Efficiency per Receive OA Pump	2
		Transmit	Analog	PLE-TP1-6	Pump Laser Efficiency per Transmit OA Pump	2
Super-visory Channel	OA	Receive	Analog	SPR-SU	Signal Power Received (C-Band only)	1
		Transmit	Analog	SPT-SU	Signal Power Transmitted	1
	SUPVY Circuit Pack	Receive	Digital	CRC	Cyclical Redundancy Check	2
		Receive	Digital	ES	Errored Seconds	2
		Receive	Digital	BES	Bursty Errored Seconds	2
		Receive	Digital	SES	Severely Errored Seconds	2
		Receive	Digital	UAS	Unavailable Errored Seconds	2
OTU OC-48/ STM-16	OC-48/ STM-16 OTU	Receive	Analog	OPR	Optical Power Received	3
		Transmit	Analog	LBC	Laser Bias Current	2
		Transmit	Analog	OPT	Optical Power Transmitted	3
		Receive	Digital	CVS	B1 Coding Violations Count	2
		Receive	Digital	ESS	RS Errored Seconds	2
		Receive	Digital	SESS	RS Severely Errored Seconds	2
		Receive	Digital	SEFSS	RS Errored Frame Seconds	2
OTU HSBB	HSBB OTU	Receive	Analog	OPR	Optical Power Received	3
		Transmit	Analog	LBC	Laser Bias Current	2
		Transmit	Analog	OPT	Optical Power Transmitted	3

Table 5-2 Supported Performance Parameters (continued)

Monitor for	Monitor at	Direction	Type	PM Parameter	Full Parameter Name	Type
OTU OC-192/ STM-64	OC-192/ STM-64 OTU	Receive	Analog	OPR	Optical Power Received	3
		Transmit	Analog	LBC	Laser Bias Current	2
		Transmit	Analog	OPT	Optical Power Transmitted	3
		Receive	Digital	CVS	B1 Coding Violations Count	2
		Receive	Digital	ESS	RS Errored Seconds	2
		Receive	Digital	SESS	RS Severely Errored Seconds	2
		Receive	Digital	SEFSS	RS Errored Frame Seconds	2
		Receive	Digital	FEC-EC	FEC Error Count	2
		Receive	Digital	FEC-UBC	FEC Uncorrectable Block Count	2

Table 5-2 Supported Performance Parameters (continued)

Monitor for	Monitor at	Direction	Type	PM Parameter	Full Parameter Name	Type
4:1 10G MUX OTU	4:1 10G MUX OTU	Receive	digital	CVS	B1 Coding Violtation Counts (OC-48/STM-16 inputs only)	2
		Receive	digital	ESS	RS Errored Seconds (OC-48/STM-16 inputs only)	2
		Receive	digital	SESS	RS Severely Errored Seconds (OC-48/STM-16)	2
		Receive	digital	SEFSS	RS Errored Framed Seconds (OC-48/STM-16 inputs only)	2
		Receive	digital	FEC-EC	FEC Error Count (MUX OCh 10G input only)	2
		Receive	digital	FEC-UBC	FEC Uncorrectable Block Count (MUX OCh 10G input only)	2
		Transmit	digital	CVS	B1 Coding Violation Counts (OC-48/STM-16 outputs only)	2
		Transmit	digital	ESS	RS Errored Seconds (OC-48/STM-16 outputs only)	2
		Transmit	digital	SESS	RS Severely Errored Seconds (OC-48/STM-16 outputs only)	2
		Transmit	digital	SEFSS	RS Error Framed Seconds (OC-48/STM-16 outputs only)	2
		Receive	analog	OPR	MUX OCh 10G Optical Power Received	3
		Transmit	analog	LBC	MUX OCh 10G Laser Bias Current	2
		Transmit	analog	OPT	MUX OCh 10GOptical Power Transmitted	3

Table 5-2 Supported Performance Parameters (continued)

Monitor for	Monitor at	Direction	Type	PM Parameter	Full Parameter Name	Type
Optical Channel	OMON	Transmit	Analog	SPT-C	Per Channel Signal Power Transmitted	1
		Receive	Analog	SPR-C	Per Channel Signal Power Received	1

Parameter Processing

Parameter Definitions

Refer to Table 5-3, "Performance Parameter Processing" (5-24) for a description of the processing performed for each of the two (2) types of parameters.

Table 5-3 Performance Parameter Processing

Parameter Type	PM Report	Threshold Provisioning	Threshold Retrieval	TCA/QOS Notification	Baselining
1	Yes	Yes (Set by User)	Yes	Yes	Yes
2	Yes	Yes (Set by User)	Yes	Yes	No
3	Yes IN RANGE OUT OF RANGE)	No (Set by Factory)	No	Yes	No

Circuit Pack Removal

Once a circuit pack has been removed, digital performance data that has been stored and that is associated with the removed circuit pack is discarded by the system.

□

Optical Line Signal Power Parameters

Total Optical Power Received (TOPR-OL)

The sum of per-channel signal power received for the specified optical line. The TOPR-OL has a baseline value that can be set externally by a user command. The TOPR-OL is a function of the total number of channels at any given time. Whenever a channel is added or removed, this parameter can be manually re-baselined. Upon execution of the baselining command, the TOPR-OL baseline value is displayed in the PM report, next to the currently measured value, in dBm.

Important! Baselining is done automatically when a channel is added or removed. Re-baselining can be initiated manually by an external user command.

CAUTION

When TOPR-OL is re-baselined, any optical line that is in a defect state (LOS or AIM) is not re-baselined. If LOS occurs in one or more channels, baselining the TOPR-OL may result in an incorrect baseline value. Do not re-baseline if a LOS condition occurs for a channel.

Total Optical Power Transmitted (TOPT-OL)

The sum of per-channel signal power transmitted for the specified optical line. The TOPT-OL has a baseline value that can be set externally by a user command. This baseline value is helpful in determining degraded service performance. The TOPT-OL is a function of the total number of channels at any given time. Whenever a channel is added or removed, this parameter can be manually re-baselined. Upon execution of the baselining command, the TOPT-OL baseline value is displayed in the PM report, next to the currently measured value, in dBm.

Important! Baselining is done automatically when a channel is added or removed. Re-baselining can be initiated manually by an external user command.

CAUTION

When TOPT-OL is re-baselined, any optical line that is in a defect state (LOS or AIM) is not re-baselined. If LOS occurs in one or more channels, baselining the TOPT-OL may result in an incorrect baseline value. Do not re-baseline if a LOS condition occurs for a channel.

□

Optical Line Equipment Health Parameters

Pump Laser Efficiency PLE-RP1-6, PLE-TP1-6

The Pump Laser Efficiency (PLE) provides an indication of the level of performance of the pump lasers of the OA. The major contribution to PLE is aging, which causes permanent degradation of performance under the same system condition.

Other factors affecting the performance of pump lasers are:

- number of channels
- input power

□

Supervisory Channel Performance Parameters

Signal Power Received (SPR-SU)

The signal power received for the Supervisory Channel. The SPR-SU has a baseline value that can be set externally by a user command. This baseline value is helpful in determining degraded service performance. The SPR-SU baseline value is displayed in the PM report, next to the currently measured value, in dBm.

Important! Baselining is done automatically during initial system installation. Re-baselining can be initiated manually by an external user command.

CAUTION

When SPR-SU is re-baselined, any optical line that is in a defect state (LOS or AIM) is not re-baselined. If LOS occurs in the channel, baselining the SPR-SU may result in an incorrect baseline value. Do not re-baseline if a LOS condition occurs for the channel.

Signal Power Transmitted (SPT-SU)

The signal power transmitted for the Supervisory Channel. The SPT-SU has a baseline value that can be set externally by a user command. This baseline value is helpful in determining degraded service performance. The SPT-SU baseline value is displayed in the PM report, next to the currently measured value, in dBm.

Important! Baselining is done automatically during initial system installation. Re-baselining can be initiated manually by an external user command.

CAUTION

When SPT-SU is re-baselined, any optical line that is in a defect state (LOS or AIM) is not re-baselined. If LOS occurs in the channel, baselining the SPT-SU may result in an incorrect baseline value. Do not re-baseline if a LOS condition occurs for the channel.

□

Supervisory Digital Parameters

Overview

The Supervisory circuit pack monitors a series of parity errors for the health of the Supervisory Channel. The SUPVY signal operates at a data rate of 2.048 Mbps and is formatted according to the standards for an E1 signal format, with respect to framing, CRC error monitoring, and channel numbering. The first time slot (Channel 0) is used for framing (FRM) and parity error checking (CRC Checksum Errors.)

Monitored Parity Errors

Refer to Table 5-4, “Error Event Counter Definitions” (5-29) for complete definition information about each of the monitored parity errors.

Table 5-4 Error Event Counter Definitions

Error Event	Error Event Definition	Counter Size (bits)
CRC (Cyclical Checksum Errors)	Any received Checksum in error.	16
Errored Second Events	Any incorrect received CRC Checksum within a one second interval.	16
Bursty Errored Second Events	Greater than 1, but less than 915, CRC checksum errors within a 1 second period.	16
Severely Errored Second Events	915 or more CRC Checksum errors within a one second period.	16
Unavailable Second Events	A one second period in the unavailable state.	16

OTU Performance Parameters

Optical Power Received (OPR)

Each receiver interface in the terminals and regenerators monitors the amount of power received from the fiber. OPR is reported as either IN-RANGE or OUT-OF-RANGE. There is no high threshold for OPR, while the low OPR threshold is calibrated in the factory and is not user-provisionable.

When the low OPR threshold is crossed, a TCA/QOS is sent.

Optical Power Transmitted (OPT)

Each transmitter interface in the terminals and regenerators monitors the amount of power generated by the laser. OPT is reported as either IN-RANGE or OUT-OF-RANGE. The high and low threshold values are calibrated in the factory and are not user-provisionable.

When either OPT threshold is crossed, a TCA/QOS is sent.

OPR and OPT Threshold Values

The OPR and OPT parameters associated with the OTU circuit pack and are based on normalized values shown in the form of X.XX.

OPR has a threshold value of 1.0 that is not user-provisionable. If the current measured value is more or equal 1.00, the receive signal power of the OTU port is operating normally (IN range). However, if the current measured OPR value is less then 1.00, a status of Out Of Range (OOR) will be displayed.

OPT has a low threshold value of 0.80 and a high threshold value of 1.20 that are also not user-provisionable. If the current measured value is within the limits of 0.80 and 1.20 inclusive, the transmit signal power of the OTU port is operating normally (IN range), else a status of OOR will be displayed.

Unlike other analog parameters, for example, TOPR, status, to save SNMS code, the value of OPR/OPT is IN and OOR (not GT or LT).

Because the OPR and OPT values are based on a normalized value, it is not practical to display actual power in values of dBm.

□

OTU Equipment Health Parameters

Laser Bias Current (LBC)

Each transmitter interface in the terminals and regenerators monitors the Laser Bias Current (LBC). The value of the LBC is normalized to the LBC factory value. There is no low threshold for LBC, while the high LBC threshold value is user-provisionable.

When the high LBC threshold is crossed, a TCA/QOS is sent.

□

Section B1 Byte Digital Performance Parameters

SONET Section Definition

In SONET terminology, the Regenerator Section (RS) is referred to as the ***Sonet Section***. The SONET Section parameters monitor the portion of a transmission facility including terminating points, between either a terminal NE and a regenerator or two regenerators. A terminating point is the point after signal regeneration at which performance monitoring may be done.

Monitored Parameters

Refer to Table 5-5, "Monitored SONET Physical Layer Performance Parameters" (5-32) for a list of SONET physical layer performance parameters that are monitored by the WaveStar® OLS 1.6T system.

Table 5-5 Monitored SONET Physical Layer Performance Parameters

Acronym	Full Name	Definition
CVS	Coding Violations Count	Count of BIP-8 errors (B1 Byte)
ESS	Errored Seconds Count	BIP-8 errors (B1) ≥ or SEF ≥ 1 or LOS ≥ 1
SESS	Severely Errored Seconds Count	BIP-8 errors (B1)≥ 2392 or 8554 or SEF ≥ 1 or LOS ≥ 1
SEFSS	Severely Errored Frame Seconds Count	SEF ≥ 1

Optical Channel Signal Power Parameters

Signal Power Transmitted Per Channel (SPT-C)

This is the signal power transmitted for the specified optical channel. The SPT-C has a baseline value that can be set externally by a user command. This baseline value is used to determine high and low threshold crossings for detecting degraded service performance. Whenever a channel is added or removed, this parameter can be manually re-baselined. Upon execution of the baselining command, the PM report next to the currently measured value, in dBm.

Baselining is done automatically when a channel is added. RE-baselining can be initiated manually by an external user command.

CAUTION

When SPT-C is re-baselined, any optical line that is in a defect state (LOS or AIM) is not re-baselined. If LOS occurs in the channel, baselining the SPT-C may result in an incorrect baseline value. Do not re-baseline if an LOS condition occurs for the channel.

Signal Power Received Per Channel (SPR-C)

This is the signal power received for the specified optical channel. The SPR-C has a baseline value that can be set externally by a user command. This baseline value is used to determine high and low threshold crossings for detecting degraded service performance. Whenever a channel is added or removed, this parameter can be manually re-baselined. Upon execution of the baselining command, the SPT-C baseline value is displayed in the SPR-C baseline value is displayed in the PM report next to the currently measured value, in dBm.

Baselining is done automatically when a channel is added. Re-baselining can be initiated manually by an external user command.

CAUTION

When SPR-C is re-baselined, any optical line that is in a defect state (LOS or AIM) is not re-baselined. If LOS occurs in the channel, baselining the SPR-C may result in an incorrect baseline value. Do not re-baseline if an LOS condition occurs for the channel.

Report Inhibiting

Autonomous reporting of the SPR-C and SPT-C Threshold Crossing Alerts (TCA)/Quality of Signal (QOS) is inhibited during period in which any of the following conditions is true:

- The OLS 1.6T Line is in one of the following defect states:
  - Total Optical Channel LOS
- The respective OLS 1.6T channel is in one of the following defect states:
  - Channel LOS
  - Channel AIM
- There is no association at the head end (or WAD) for this channel.

□

Thresholds

Overview

Purpose This section provides information on analog and digital performance parameter thresholds, provides background information on each type, and categorizes those which can and cannot be user-provisioned.

□

Performance Parameter Thresholds

Overview

Performance parameter thresholds are set to show degraded performance. Two types of thresholds are:

- Counter-Threshold, which is associated with digital parameters and can be user-provisioned.
- Gauge-threshold, which is associated with analog parameters, and may be user-provisioned.

Each provisionable Performance Monitoring parameter includes two threshold registers:

- 15 minutes, and
- 24 hours

Gauge-Thresholds

WaveStar® OLS 1.6T system uses gauge-thresholds for all analog parameters. Unlike counter parameters, which can only increase in value until reset, the value of a gauge parameter can increase or decrease over time.

The Optical Power Transmitted (OPT), Optical Power Received (OPR), and Laser Bias Currents for the OTUs, have threshold values calibrated at the factory and can not be user-provisioned.

Analog parameters have two associated user-provisioned thresholds:

- high threshold parameter, and
- low threshold parameter

Each gauge threshold has a gauge value.

- High Threshold
  Defines the value that the gauge must reach or exceed in order to optionally generate a QOS notification. This value, when combined with the notification switch state, controls the generation of the QOS notification.
  Initially, if the switch is on and the gauge value becomes equal to or greater than the high threshold's gauge value (in a positive going direction,) then the defined event notification is triggered. Subsequent crossings of the high threshold's gauge value does not generate additional event reports unless the gauge value becomes equal to or less than the low threshold's value.
- Low Threshold

Defines the value that the gauge must fall below in order to optionally generate a QOS notification. This value, when combined with the notification switch state, controls the generation of the QOS notification.
Initially, if the switch is on and the gauge value becomes equal to or less than the low threshold's gauge value (in a negative going direction), then the defined event notification is triggered. Subsequent crossings of the low threshold's gauge value does not generate additional event reports unless the gauge value becomes equal to or greater than the high threshold's gauge value.

Counter Thresholds

Counter thresholds are accumulative in nature and are used for reporting digital Performance Measurement parameters, such as Coding Violations (CVs.) A counter threshold has only one threshold value.

For one-day counter - UAS, ES, SESS, SEFS and BES (SUPVY only)

If a value up to 86400 and status of GT are displayed, it means that during a one-day period the value exceeded the provisioned threshold. However, if a value of 86400 and status of OVFL for the PM parameter are displayed, it means that the value not only exceeded the provisioned threshold during a one-day period, it also exceeded the limit of 86400 (the maximum number of seconds in a day). This can occur if there is a difference in the WS-clock and board-controller clock. As a result, the OVFL flag can be assumed to be the same as the GT flag.

For 15-min counter - UAS, ES and SESS, SEFS and BES (SUPVY only)

If a value up to 900 and status of GT are displayed, it means that during a 15-min period the value exceeded the provisioned threshold. However, if a value of 900 and status of OVFL for the PM parameter are displayed, it means that the value not only exceeded the provisioned threshold during a 15-min period, it also exceeded the limit of 900 (the maximum number of seconds in a 15-min period). This can occur if there is a difference in the WS-clock and board controller clock. As a result, the OVFL flag can be assumed to be the same as the GT flag.

□

Parameter Threshold Provisioning

Provisionable Thresholds

The following types of parameter thresholds can be user-provisioned:

- All digital parameters
  - CRC
  - ES
  - BES
  - SES
  - UAS
  - CVS
  - ESS
  - SESS
  - SEFSS
  - FEC-EC
  - FEC-UBC
- Optical Signal Power Parameters
  - TOPR-OL
  - TOPT-OL
  - SPR-SU
  - SPT-SU
  - SPT-C
  - SPR-C
- Optical Line Equipment Health Parameters
  - PLE-RP1–6
  - PLE-TP1–6
- OTU Equipment Health Parameters
  - LBC

Digital Parameters

Refer to Table 5-6, “Summary of Digital Performance Monitoring Processes that Affect Digital Parameters” (5-39) for a summary of the Performance Monitoring Processing/Functions that affect digital performance parameters.

Table 5-6 Summary of Digital Performance Monitoring Processes that Affect Digital Parameters

Monitored For:	PM Parameter	Initialize Registers	User SET/RTRV Thresholds	QOS Alarm/Clear	QOS Alarm Report	PM Report	RTRV-PM/TH-"ALL"
Supervisory Channel	CRC	Yes	Yes	Yes	Yes	Yes	Yes
	ES	Yes	Yes	Yes	Yes	Yes	Yes
	BES	Yes	Yes	Yes	Yes	Yes	Yes
	SES	Yes	Yes	Yes	Yes	Yes	Yes
	UAS	Yes	Yes	Yes	Yes	Yes	Yes
OTU OC-48/STM-16	CVS	Yes	Yes	Yes	Yes	Yes	Yes
	ESS	Yes	Yes	Yes	Yes	Yes	Yes
	SESS	Yes	Yes	Yes	Yes	Yes	Yes
	SEFSS	Yes	Yes	Yes	Yes	Yes	Yes
OTU OC-192/STM-64	CVS	Yes	Yes	Yes	Yes	Yes	Yes
	ESS	Yes	Yes	Yes	Yes	Yes	Yes
	SESS	Yes	Yes	Yes	Yes	Yes	Yes
	SEFSS	Yes	Yes	Yes	Yes	Yes	Yes
	FEC-EC	Yes	Yes	Yes	Yes	Yes	Yes
	FEC-UBC	Yes	Yes	Yes	Yes	Yes	Yes
4:1 10G Multiplex OTU (OTU70)	CVS	Yes	Yes	Yes	Yes	Yes	Yes
	ESS	Yes	Yes	Yes	Yes	Yes	Yes
	SESS	Yes	Yes	Yes	Yes	Yes	Yes
	SEFSS	Yes	Yes	Yes	Yes	Yes	Yes
	FEC-EC	Yes	Yes	Yes	Yes	Yes	Yes
	FEC-UBC	Yes	Yes	Yes	Yes	Yes	Yes

Analog Parameters

Refer to Table 5-7, "Summary of Analog Performance Monitoring Processes that Affect Analog Parameters" (5-40) for a summary of the Performance Monitoring Processing/Functions that affect analog performance parameters.

Table 5-7 Summary of Analog Performance Monitoring Processes that Affect Analog Parameters

Monitored For:	PM Parameter	Manual Baseline	SET/RTRV Thresholds	QOS Alarm/Clear	QOS Alarm Report	PM Report
Optical Line	TOPR-OL	Yes	Yes	Yes	Yes	Yes
	TOPT-OL	Yes	Yes	Yes	Yes	Yes
	PLE-RP1-6	—	Yes	Yes	Yes	Yes
	PLE-TP1-6	—	Yes	Yes	Yes	Yes
Supervisory Channel	SPR-SU	Yes	Yes	Yes	Yes	Yes
	SPT-SU	Yes	Yes	Yes	Yes	Yes
OTU OC-48/STM-16	OPR	—	—	Yes	Yes	Yes
	LBC	—	Yes	Yes	Yes	Yes
	OPT	—	—	Yes	Yes	Yes
OTU HSBB	OPR	—	—	Yes	Yes	Yes
	LBC	—	Yes	Yes	Yes	Yes
	OPT	—	—	Yes	Yes	Yes
OTU OC-192/STM-64	OPR	—	—	Yes	Yes	Yes
	LBC	—	Yes	Yes	Yes	Yes
	OPT	—	—	Yes	Yes	Yes
4:1 10G Multiplex OTU (OTU70)	OPR	—	—	Yes	Yes	Yes
	LBC	—	Yes	Yes	Yes	Yes
	OPT	—	—	Yes	Yes	Yes
Optical Channel	SPR-C	Yes	Yes	Yes	Yes	Yes
	SPT-C	Yes	Yes	Yes	Yes	Yes

Thresholds are set and reported using relative dB values. By using relative values, new high and low thresholds are automatically adjusted after rebaselining.

Each provisioned analog parameter has four associated thresholds:

- notifyHigh (notifyHigh1), user provisionable
- clearHigh (notifyLow1), non-user provisionable
- notifyLow (notifyLow2), user provisionable
- clearLow (notifyHigh2), non-user provisionable

Important! Do not use 0 or 1 dB due to the frequency of the TCA for the following thresholds:

- Optical Signal Power Parameters (TOPR-OL, TOPT-OL, SPR-SU, SPT-SU, SPT-C, SPR-C)
- Optical Line Equipment Health Parameters (PLE-RP1-6, PLE-TP1-6)
- OTU Equipment Health Parameters (LBC)

Repeater and WAD SPR-C and SPT-C Thresholds

For the Repeater and WAD, since both the SPR-C and SPT-C refer to the same measurement point, their thresholds should be set to the same value. Only the SPT-C threshold shall be used for the generation of TCA. In other words, no TCA will be generated for the SPR-C.

Repeater and WAD PLE-RPn and PLE-TPn Thresholds

For the Repeater and WAD, since both the PLE-RPn and PLE-TPn (each ″n″ is one of six OA pumps) refer to the same measurement point, their thresholds should be set to the same value. Only the PLE-RPn threshold shall be used for the generation of TCA.

□

QOS Alarm Events

Introduction

The Quality of Service (QOS) notification message is reported to the operations system and interfaces where threshold crossings associated with a particular path can be correlated and the most probable source of the degradation can be identified.

Important! To activate TCAs, you must turn on QOS for the required PM parameter(s) from the CIT GUI or PROV-TH TL1 command

Reporting

The WaveStar® OLS 1.6T system reports threshold crossings as Quality of Service (QOS) alarm messages/event notifications on the individual parameters monitors. A QOS alarm message is triggered whenever a monitored performance parameter crosses the high or low threshold associated with the parameter.

Message Characteristics

The QOS event/notification autonomous messages have the following characteristics:

- The messages are reported as autonomous alarm messages to the OS and user interface
- QOS does not raise any visual or audible alarms
- Alarm messages can be retrieved in the CIT TL/1 RTRV-ALM-ALL report
- A QOS entry is logged in the history report which may then be retrieved by the user

QOS Alarm Levels

Refer to Table 5-8, “Alarm Attributes Associated with QOS” (5-42) for a list of alarm levels that are associated with QOS.

Table 5-8 Alarm Attributes Associated with QOS

	Alarm Attributes Provisioning as:	
	CIT PC (SONET)	**CIT PC (SDH)**
QOS Alarm Indicator	NA (Not Alarmed)	No Alarm

Clearing QOS Alarms

clearHigh The clearHigh alarm-clearing threshold defines the value that the gauge must reach in order to clear the QOS notification. This value, when combined with the switch state, controls the clearing of the notification. If notifyHigh's on/off switch is on and the gauge value becomes equal to or less than the clearHigh's gauge value (in the negative going direction) then the defined event notification is cleared.

Important! ClearHigh is non-provisionable and is fixed to be 10% lower than the value of notifyHigh.

clearLow The clearLow alarm-clearing threshold defines the value that the gauge must reach or exceed in order to clear the QOS notification. This value, when combined with the switch state, controls the clearing of the notification. If notifyLow's on/off switch is on, and the gauge value becomes equal to or higher than notifyLow's gauge value (in a positive going direction), then the defined event clearing is triggered.

Important! ClearLow is non-provisionable and is fixed to be 10% higher than the value of notifyLow.

□

Thresholds that can not be User-Provisioned

Description

Some parameters that check laser aging or equipment failures are monitored internally. These parameters have a high threshold and a low threshold, neither of which can be user-provisioned. The threshold values are initially measured in the factory and are stored on the associated circuit pack. During normal operation, each parameter is measured and compared with the high and low thresholds associated with that parameter.

Threshold Values

Refer to Table 5-9, “High and/or Low Thresholds Parameters that Can NOT be User-provisioned” (5-44) for values for non-provisionable parameters.

Table 5-9 High and/or Low Thresholds Parameters that Can NOT be User-provisioned

Monitored For	PM Parameter	Acceptable Threshold Range
OTU OC-48/STM-16	OPR	high threshold: none low threshold: ≥ EEPROM value calibrated at factory
	OPT	high threshold: 120% of factory initial value low threshold: ≥ 80% of factory initial value
OTU HSBB	OPR	high threshold: none low threshold: ≥ EEPROM value calibrated at factory
	OPT	high threshold: 120% of factory initial value low threshold: ≥ 80% of factory initial value
OTU OC-192/STM-64	OPR	high threshold: none low threshold: ≥EEPROM value calibrated at factory
	OPT	high threshold: 120% of factory initial value low threshold: ≥ 80% of factory initial value

6 Maintenance

Overview

Purpose This chapter introduces maintenance features of the WaveStar® OLS 1.6T. These features continuously monitor the overall health of all the equipment and the signals passing through the system.

□

Maintenance Signals

Overview

Purpose

The WaveStar® OLS 1.6T system uses maintenance signals and messages to identify and isolate faulty equipment within the system. WaveStar® OLS 1.6T is an optically amplified line system that has access to some SONET/SDH overhead data, as well as Optical Channel Overhead Data, within the optical line signal.

Maintenance Signals

The following signals are used by the WaveStar® OLS 1.6T:

- Keep Alive Signal (includes AIS-L, Pseudo-AIS, OCH Client FDI, and OCH TC-AIS)
- Supervisory Signal (includes Optical Channel Alarm Indication Message). See the ***WaveStar® OLS 1.6T Applications Planning Guide*** (365-575-786) for more information about the Supervisory Signal.
- J0 Section Trace Identifier for SONET/SDH
- Optical Channel Trace for OCh10G

□

Keep Alive Signal

Description

A keep-alive signal is a signal that is transmitted by the Optical Translator Unit (OTU) in place of a normal signal in order to maintain transmission continuity. The keep-alive signal may also indicate to the receiving equipment that there has been a transmission interruption located either at the equipment originating the keep alive signal or upstream (opposite the direction of transmission) of that equipment.

There are four different keep-alive signals in the OLS 1.6T system. Two of the alarms use Alarm Indication Signals (AIS).

1. AIS-L (Line Alarm Indication Signal, SONET. Multiplex Section AIS, SDH equivalent).
2. Pseudo-AIS (Proprietary AIS signal).
3. OCh Client FDI (Optical Channel Client Forward Defect Indicator). This is used in OTUs with WaveWrapper
4. OCh TC-AIS (Optical Channel Tandem Connection Alarm Indication Signal). This is used in OTUs with WaveWrapper.

The OC-48/STM-16 OTU uses the AIS-L keep-alive signal. When an OC-48/STM-16 OTU port has a Terminal Drop association, and an AIS-L is detected at the OTU IN port, the software either allows the AIS-L signal to pass through the OTU, or it turns off the transmit LASER as determined by a provisionable parameter set by the user. This is provisioned on a per-port basis using the ENT-OTPS TL1 command. The original value of the provisioned parameter is to shut off the transmit LASER. When the transmit LASER is turned off because an AIS-L is detected, an OTU LASER shut off status condition is activated.

□

Supervisory Signal

Description

The Supervisory (SUPVY) Signal performs the following functions:

- transports messages between WaveStar® OLS 1.6T NEs
- allows connectivity testing during installation and operation
- carries pump power-up information across nodes
- enables voice communications through Orderwire

The SUPVY Channel is unamplified and can run with OA lasers off.

Optical Channel Alarm Indication Message (OCAIM)

An OCAIM notifies the downstream (in the direction of transmission) equipment when an incoming optical channel Loss of Signal defect is declared at an OA circuit pack. The downstream message has both the optical channel and the injected SUPVY signal. This message is sent downstream via the SUPVY DL to suppress or unsuppress the downstream alarms when an incoming optical channel LOS is declared or cleared at a WaveStar® OLS 1.6T NE.

□

J0 Section Trace Identifier (STI)

Purpose

The WaveStar® OLS 1.6T can read the J0 Section Trace Identifier (STI) for both OC-48/STM-16, OC-192/STM-64, and OC-192/STM-64 FEC signals. The J0 STI Byte allows the tracing, reading, and comparing of the received signal with the expected OC-48/STM-16, OC-192/STM-64, and/or OC-192/STM-64 FEC signal at the OTUs.

Description of J0 STI

The J0 STI Byte is a 16-byte, fixed length string that is transmitted in 16 consecutive OC-48/STM-16 or OC-192/STM-64 frames. This string is transmitted in the J0 byte position of the section overhead of the first STS-1 of each of the OC-48/STM-16 or OC-192/STM-64 frames and is retrievable on demand.

Table 6-1 J0 STI 16-Byte Frame

Frame/Byte #	Bit Value							
	b_0	b_1	b_2	b_3	b_4	b_5	b_6	b_7
1	1	C_1	C_2	C_3	C_4	C_5	C_6	C_7
2	0	X	X	X	X	X	X	X
3	0	X	X	X	X	X	X	X
. . .	. . .	. . .	. . .	. . .	. . .	. . .	. . .	. . .
. . .	. . .	. . .	. . .	. . .	. . .	. . .	. . .	. . .
16	0	X	X	X	X	X	X	X

C_1 C_2 C_3 C_4 C_5 C_6 C_7 is the first byte of the string. It is a frame start marker that includes the result of the CRC-7 calculation over the previous frame. C_1 is the Most Significant Bit (MSB.)

0XXXXXXX represents a T.50 character where the other 15 bytes is of this format are used to transport 15 T.50 characters. The first bit of every byte is a header bit. The only non-zero bit is found in the first byte of the 16 bytes.

□

Optical Channel Trace for OCh10G

Definitions

OCh10G The transport of OC-192/STM-64 signals with Strong Forward Error Correction (FEC) is achieved by adding digital overhead that contains the FEC check bytes and the Optical Channel Overhead (OCh-OH). The resulting signal is transported at approximately 10.7 GB/s. This signal format is referred to as OCh10G (Optical Channel at 10 GB/s).

OCh-S The Optical Channel Section (OCh-S) is defined as a portion of a network between adjacent OTUs with FEC processing turned on, where FEC processing, performance monitoring, and maintenance functions are performed.

OCh-P The Optical Channel Path (OCh-P) is defined as spanning the distance from that point where an OC-192/STM-64 signal is converted to an OCh10G signal (add mode) to that point where an OCh10G signal is converted to an OC-192/STM-64 signal (drop mode). The path trace can be used to verify connectivity between path terminating network elements, and supports path maintenance.

Description

The WaveStar® OLS 1.6T OCh10G capable OTUs (that is, OC-192/STM-64 OTUs with Strong FEC) have access to the Optical Channel Path Trace overhead byte. This enables the system to determine if the received trace string matches the expected string at an OCh10G capable OTU.

□

Integration and Timing

Overview

Purpose This section provides information on the alarm indication signal, alarm timing, and alarm clear delay.

Alarms Delays

Autonomous Indications

Autonomous indications of conditions or events are generated when they occur. No user action is required to produce autonomous indications. Autonomous indications appear at the following alarm and status interfaces:

- Alarm Contact Closures to the Office Alarm Grid
- Craft Interface Terminal (CIT)
- LEDs on the equipment
- OS Interfaces

On-Demand Indicators

On-demand indications of conditions or events are generated when requested by the user. On-demand indications appear at the following alarm and status interfaces:

- CIT
- OS Interfaces

Reported Items

Items reported by the Alarm and Status Indicators are as follows:

- Conditions
- Events

Conditions

Conditions persist in time and indicate there is something non-nominal about the system.

Events

Events occur at particular times. The four types of events are as follows:

- A condition starting
- A condition clearing
- An autonomous action by the system
- A user action

Incoming Signal Alarm Delay

When a condition related to an incoming signal is detected, an individual timer is started for that condition. This timer runs until a provisioned interval, called the Incoming Signal Alarm Delay, expires or until it is determined that the condition no longer exists.

If, at the end of the Incoming Signal Alarm Delay interval, it is determined that the condition still exists, autonomous indications of

the condition are generated and on-demand reports will indicate that the condition is active. If the condition is determined to have been cleared, no indications of the condition are generated.

Alarm Clear Delay

The Alarm Clear Delay applies individually to conditions related to incoming signal failures. As soon as the system determines that a condition has been cleared, an Alarm Clear Delay timer begins for that condition. The timer runs until a provisioned interval, called the Alarm Clear Delay, expires or until the condition is detected again

If, at the end of the Alarm Clear Delay interval, the condition remains cleared, all indications of the condition are cleared. If the same condition appears during the Alarm Clear Delay interval, all indications remain active.

□

Equipment Failure

Description

Equipment failures are reported as soon as the defect is determined to exist. There is no Incoming Alarm Delay and there is no Alarm Clear Delay associated with equipment failures. The alarm for an equipment failure will report the location of the failure to assist the user in trouble-shooting any failures. Refer to ″Trouble Clearing Tasks″ (13-1) for details on specific alarms.

Incoming Alarm Delay

There is no Incoming Alarm Delay associated with equipment failures.

Alarm Clear Delay

There is no Alarm Clear Delay associated with equipment failures.

□

Fault Identification

Overview

Purpose This section provides information on automatic fault detection and isolation. [For help, refer to ″Performance Monitoring″ (5-1).]

□

Automatic Fault Detection

Description

Maintenance activities are affected by Network Element Type (NETYPE) provisioning and OTPS provisioning as follows:

- Common slots are made known to the software by provisioning the NETYPE
- Per Channel slots are made known to the software by provisioning OTPS associations.

Monitored Signal Conditions

Table 6-2 lists incoming signals and associated conditions.

Table 6-2 Monitored Incoming Signal

Incoming Signal Level	Conditions
10G Multiplexing OTU	Optical Payload Label Mismatch, LOS, OLOF, Client Sync Failure, J0 Mismatch, OCh TC-AIS, OC-48 Client FDI, Wave Wrapper path trace mismatch
High-Speed Broadband OTU	LOS, LOL
Optical Redundancy Switch	LOS
OC-48/STM-16 OTU	LOS, LOF, AIS-L, J0 Mismatch
OC-192/STM-64 OTU	LOS, LOF, Pseudo-AIS, J0 Mismatch
OC-192/STM-64 OTU with FEC (WaveWrapper)	LOS, OLOF, OCh TC-AIS, Wave Wrapper path trace mismatch, OCh Client FDI, OC-192/STM-64 LOF, J0 Mismatch
Optical Channel	LOS
ODU	LOS
Supervisory Signal	D-LOS, LFA
Wavelength Add Drop	LOS

LOS: Loss of Signal

LOL: Loss of Lock (only if provisioned)

LOF: Loss of Frame

AIS-L: Line Alarm Indication Signal

OLOF: Optical Channel Loss of Frame

OC-48 Client FDI: OC-48 Client Signal Forward Defect Indicator

OCh TC-AIS: Optical Channel Tandem Connection Alarm Indication Signal

OCh Client FDI: Optical Channel Client Forward Defect Indicator

D-LOS: Digital Loss of Signal

LFA: Loss of Frame Alignment

□

Automatic Fault Isolation and Diagnostics

Description When a trouble condition is detected, the WaveStar® OLS 1.6T isolates the failed circuit pack or signal.

Failure Reporting Failures are reported to a local technician and operations system for repair.

Failure Alarming The control system examines the indications it receives and determines the most probable cause for the failure (that is, circuit pack or control link). Control failures are automatically alarmed through equipment and office alarm relays, ensuring that the CIT is notified regardless of the effect of the failure on other control functions.

Cleared Conditions When a trouble condition is cleared, automatic diagnostics re-evaluate the related defects in order to isolate another possibly failed circuit pack or signal.

□

Loss of Signal (LOS)

Overview

Purpose This section provides information on LOS, optical channel LOS, and the functions of the alarm indicators during a LOS.

□

Detecting Incoming LOS at an OA

Description

Each NE that terminates an Optical Transmission Section (OTS) monitors the incoming optical line signals for a LOS.

Declaring LOS Defect

The system will detect a LOS defect when the input signal is below a threshold value for a time from 10 to 100 microseconds. A LOS alarm will be raised within 10 milliseconds of the onset of the failure.

Clearing LOS Defect

The system will clear the LOS defect when the power is above a threshold value for a time from 1 to 10 milliseconds.

□

Optical Channel LOS

OA-to-OMON Connections

OA-to-OMON fiber connections are verified manually when an OA circuit pack and/or an OMON circuit pack is installed or replaced.

Spectrum Measurements

The system software makes spectrum measurements of all OMON input ports with associated OA taps. Spectral measurements are made at least once every 15 minutes. Spectral measurements driven by failure events supersede the minimum measurement schedule.

LOS at a Local Network Element

An incoming Optical Channel LOS is detected at the Optical Spectrum Analyzer (OSA) on the OMON circuit pack. This LOS defect is then integrated within 6 to 10 seconds before generating an OCHAN LOS Alarm.

Declaring and Clearing an Optical Channel LOS

The OMON is used to scan all the channels in use at every NE. These scans are used to localize the signal failure of the channel. The optical channel LOS will be correlated with OMON scans within the line system. OCAIM and OCAIM Yellow are used for signaling purposes to correlate and clear the optical channel LOS.

OCAIM

The Optical Channel Alarm Indication Message (OCAIM) notifies downstream equipment when an incoming optical channel Loss of Signal (LOS) defect is declared at an OA circuit pack. The message contains information on all channels. This message is sent downstream via the Supervisory (SUPVY) Data Link (DL) to suppress or unsuppress the downstream alarms when an incoming optical channel Loss of Signal (LOS) is declared or cleared at a WaveStar® OLS 1.6T Network Element.

OCAIM Yellow

The OCAIM Yellow indicator notifies the upstream equipment that an incoming optical channel LOS has been detected. This message requests that the OMON scan at an OA.

□

Control System

Overview

Purpose

This section provides information on the various system controllers and their functionality to assist during trouble clearing procedures.

Types of Controllers

The WaveStar® OLS 1.6T includes four controllers:

- System Controller
- Overhead Controller
- Bay Controller
- Board Controller

System software monitors the health of each controller, including

- effect of control failures on the system
- detection, isolation, and reporting of control failures
- recovery from control failures

Control System Maintenance Philosophy

The Control System Maintenance philosophy includes:

- ***Automatic Fault Recovery*** — The control system automatically recovers from power surges or interruptions with no WaveStar® OLS 1.6T CIT action required. The system is automatically restored to its state prior to the failure.
- ***Non-Service Affecting Control Faults and Processor Resets*** — Control faults and processor restarts do not affect service. The system continues to operate in the state in which it was operating before the control failure or reset (autonomous or manual) occurred. This includes maintaining existing transmission and protection switching states.

The removal and insertion of a control pack (for example, Bay Controller, System Controller, External Interface, Overhead Controller) in a quiescent system is non-service affecting.

Version Recognition

The WaveStar® OLS 1.6T provides the following version recognition features:

- Automatic identification of the type of circuit pack installed in each slot
- Hardware and software version recognition
- Equipment Catalog Item (ECI) version identification for each circuit pack
- An apparatus code for each circuit pack, which does not change throughout the life cycle of the pack
- Firmware version recognition using Program IDentification (PID) codes. (The PID codes identify the firmware on all circuit packs, and are independent of the CLEI codes)
- Manufacturing serial number recognition
- Automatic version recognition of the system software
- Software version number

□

10BaseT — Ethernet

Description The WaveStar® OLS 1.6T includes 10BaseT Ethernet connections through the CIT and OS ports.

Table 6-3, “10 BaseT Ethernet Interface Types” (6-20) lists the supported interfaces to the CIT and OS ports.

Table 6-3 10 BaseT Ethernet Interface Types

Port Type	Supported Interface
CIT	TL1 over TCP/IP
OS	TL1 over TCP/IP TL1 over OSI TL1 over OSI using Transport Service Bridge (RFC-1006)

PING Support The CIT connection supports the `PING` command, and executes this upon startup.

□

Port Associations

Overview

Purpose Association information is used by the WaveStar® OLS 1.6T to

- control OTU output;
- assist OA gain tilt and pump power adjustments;
- set the expected output frequency and/or wavelength of the OTU circuit pack installed in a particular slot;
- instantiate slots; and
- correlate faults.

□

Available Associations

Overview

The WaveStar® OLS 1.6T is able to establish the following port associations:

- OTU port to OTU/OMU/ODU/ORS/WAD ports

Associations may also be established between external equipment and OTU, OMU, ODU, ORS, and WAD ports

Type of Associations

The following associations are available and create or define the relationship between the ports and/or equipment:

- ADD, to define OTU output port to OMU/OTU/WAD input port fiber connections
- DROP, to define ODU/WAD output port to OTU input port fiber connections
- TERMINAL DROP (TDROP), to define OTU output port to external equipment fiber connections
- EXTERNAL ADD (XADD), to define external equipment to OMU/WAD input port fiber connections
- EXTERNAL DROP (XDROP), to define ODU/WAD output port to external equipment fiber connections
- TERMINAL ADD (TADD), to define external equipment to OTU input port fiber connections
- PROTECTION ADD (PADD), to define ORS line output port to OTU input port fiber connections
- PROTECTION EXTERNAL ADD (PXADD), to define external equipment to ORS input port fiber connections
- PROTECTION DROP (PDROP), to define OTU output port to ORS input port fiber connections
- PROTECTION EXTERNAL DROP (PXDROP), to define ORS output port to external equipment fiber connections
- PROTECTION TERMINAL ADD (PTADD), to define external equipment to ORS client input port fiber connections
- PROTECTION TERMINAL DROP (PTDROP), to define ORS output port to external equipment fiber connections

□

7 Alarms and Indicators

Overview

Purpose This chapter provides information on alarm mappings and defines alarm severity assignment profiles.

Alarm Mappings

SONET Alarm Definitions

Table 7-1, "SONET Alarm Definitions" (7-2) gives definitions for the alarm severity and control criteria in the SONET environment.[1]

Table 7-1 SONET Alarm Definitions

Alarm Severity	Control Criteria
Critical	Critical alarms are used to indicate that a severe, service-affecting condition has occurred, and that immediate corrective action is imperative.
Major	Major alarms are used for hardware or software conditions that indicate a serious disruption of service or the malfunctioning or failure of important circuits. Major alarms require the immediate response of a craftsperson to restore or maintain system capability. The urgency is less than in critical situations because of a lesser immediate or impending effect on service or system performance.
Minor	Minor alarms are used for situations that do not have a serious effect on service to customers or for trouble in circuits that are not essential to NE operation.

Notes:

1. Telcordia TR-NWT-000474 Network Maintenance: Alarm & Control Criteria Common to Switching and Transport Network Elements.
2. ITU M.20 Maintenance: Introduction and General Principles.

SDH Alarm Definitions

Table 7-2, "SDH Alarm Definitions" (7-3) gives definitions for the alarm severity in the SDH environment.[1]

Table 7-2 SDH Alarm Definitions

Alarm Severity	Definitions
Prompt Maintenance Alarm (PMA)	A PMA is generated in order to initiate immediate maintenance activities by maintenance personnel to remove defective equipment from service for the purpose of restoring good service and effecting repair of the failed equipment.
Deferred Maintenance Alarm (DMA)	A DMA is generated when immediate action is not required by maintenance personnel. For example: • When performance falls below a set threshold but the effect does not warrant removal from service. • When automatic changeover to stand-by equipment has been used to restore service.

Supported Alarm Attributes

A single, user-provisioned parameter determines the set of supported attributes. The parameter value may be SONET or SDH,

- When this parameter is set to SONET,
  - supported alarm indicators are:
    CRITICAL
    MAJOR
    MINOR
    NOT ALARMED
    NOT REPORTED
  - Supported status indicators are:
    ABNORMAL
    ALARM CUT-OFF
    NEAR-END ACTIVITY
- When this parameter is set to SDH,
  - supported alarm indicators are:
    PROMPT
    DEFERRED
    NO ALARM
    NO REPORT
  - Supported status indicators are:
    ABNORMAL
    SUPPRESS

INFORMATION

□

Alarm Severity Assignment Profile (ASAP)

Definition

Alarm Severity Assignment Profile (ASAP) associates a set of alarm severities with one or more Alarm Identifiers (Alarm IDs).

ASAP Profile Types

Twelve ASAP types are supported as follows:

- bay (Bay)
- client (Client Signal)
- com (General Communication)
- env (Environment)
- ochan (Optical Channel)
- oline (Optical Line)
- pack (Circuit Pack)
- shelf (Shelf)
- slot (Slot)
- supvy (Supervisory Port)
- sw (Software)
- system (System)

Default Profile

There is one Default Profile for each ASAP type that cannot be deleted. The Alarm IDs included in the Default Profile are fixed and are not user-provisionable.

User Created Profiles

Up to 88 additional user-created profiles (of any type) may by defined. These user-created profiles are distinguished by their profile names. Each profile contains the same (non-provisionable) set of Alarm IDs as the Default Profile. The alarm severities are provisionable in each user-defined profile.

Creating a User-Defined ASAP

New ASAP types are created using the ENT-ASAP-PROF TL/1 command. Each new profile is an exact duplicate of any existing profile, as selected by the user.

Customizing a New User-Defined ASAP

Alarm severities for user-defined ASAP types may be customized using the ED-ASAP-PROF TL/1 command.

Deleting a User-Defined ASAP

Any user-created ASAP is deleted using the DEL-ASAP-PROF TL/1 command.

Important! Default ASAP cannot be deleted.

Retrieving ASAP Contents

The contents of any ASAP are retrieved using the RTRV-ASAP-PROF TL/1 command.

Associating ASAP to AIDs

Each Access Identifier (AID) in a network element for which an Alarm ID can be reported is associated with one or more types of ASAP profiles. This is exactly one profile of each such assigned type. The set of ASAP profiles assigned to each AID is fixed, and cannot be changed by the user.

For example, each Access Identifier (AID) of type LINE is assigned one profile of type supvy, and one profile of type oline.

Changing an ASAP Name

The user is able to change the name of the ASAP of a particular type assigned to a particular AID using the ENT-PROF-ASGNMT TL/1 command.

Retrieving an Assigned ASAP

A user can retrieve a report showing the ASAP(s) assigned to a specified AID(s) using the RTRV-PROF-ASGNMT TL/1 command.

The user can retrieve a report showing the AID(s) assigned to a specific ASAP using the RTRV-AID-ASGNMT TL/1 command.

□

8 Automatic Power Shutdown (APSD)

Overview

Purpose This chapter summarizes information on Automatic Power Shutdown (APSD). APSD is required by both the US and international markets in order to meet customer requirements for a safer working environment under the guidelines for laser products.

□

APSD

Theory of Operation

The purpose of automatic power shut-down (APSD) is to comply with IEC Hazard Level 1 requirements and create a safe environment for the transmission facility maintenance team to perform repairs to damaged fibers that are transmitting high power. The APSD feature brings the optical amplifier output power and pump output power to safe levels in the event of a fiber cut, removed connector, or equipment failure. After the system has been repaired or links have been re-established, APSD also ensures restoration to normal operation. Powers as high as +23 dBm are expected for an 80-channel application.

APSD is unavailable as follows:

- When the System/Bay[1] Controller, Supervisory, or Transmit OA pack resets, APSD is unavailable until the pack is rebooted.
- When the System/Bay[1] Controller, Supervisory, or Transmit OA pack failure occurs, APSD is unavailable until the pack is replaced and the system rebooted. .
- When the System/Bay[1] Controller pack removal occurs, APSD is unavailable until the pack is inserted and the system rebooted.
- When there is a shelf power failure occurs in a shelf where System/Bay[1] Controller resides, APSD is unavailable until power is restored and reboot is complete.
- In the event that an Overhead Controller resets/is removed/fails at the same time a single fiber cut occurs, APSD is not available (in the adjacent NE Transmit OA that drives the cut fiber) until the Overhead Controller is rebooted/replaced and the fiber cut condition is repaired. Users should repair the fiber cut condition and the failed pack as soon as possible to prevent any accessible laser emissions from causing injury.
- When a user-initiated upgrade or re-provisioning of certain parameters takes place (for example, executing the INIT-SYS, ENT-SYS, PROV-SYS, ENT-OSI, ENT-RMA, ENT-TSB TL1 commands), APSD may not available until the reboot is complete.
- In the event that a System/Bay[1]/Overhead controller hangs up, the software automatically initiates a system reboot to bring itself out from that state. APSD is not available until the reboot is complete.

- When a user decides to do a manual reset of the system by pressing the restart button on the EI pack, APSD is not available until the reboot is complete.
- In the event of an electrical power disruption, the Quick Transmission Feature (QTF) was offered to re-establish transmission (with optical power levels set to where they were before the glitch) within 5 minutes of power being restored. However, this occurs before the system is completely rebooted; thus APSD is not available until the system reboot is completed. [1]This applies to Bay Controller that controls OA/WAD/ODU

Important! The system reboot time is 15 to 20 minutes.

Scenarios for APSD

The following scenarios can initiate APSD:

- Disruption of an optical fiber(s) that connect two network elements (NEs)
- Disruption of an optical fiber that connects the output of an OA circuit pack to the input of an ODU1 circuit pack, and a failure or removal of an ODU circuit pack
- Disruption of an internal optical fiber that connects the output of an OA circuit pack to the input of a WAD circuit pack, failure or removal of a WAD circuit pack.
- Receive OA failures
- Power failures

Fiber cut between two NEs

A Network Element (NE) can be an End or Ring Terminal, a Repeater, or a WAD.

When there is fiber(s) cut between the two NEs, OLS 1.6T network element detects an optical line LOS and a supervisory LOS on either line 1 or line 2, turns off the optical power at the output port of the corresponding OA circuit pack within one second, and informs the NE at the other end of the span (downstream NE) to do the same on the affected line 1 and/or 2. The NE at each end of the affected span declares an APSD condition in addition to activating the optical line LOS alarms (if appropriate) which are reported to the CIT and OS.

When the fiber(s) are restored, supervisory LOS clears at the NE(s) and the supervisory data link is restored. The upstream NE checks for the supervisory Line 1 and Line 2 mismatch, OA connection mismatch and insufficient span loss. The downstream NE does the

same thing. If the NE passes all these checks, the NE(s) generate(s) an APSD-clear message which is reported to the CIT and OS, and the OLS 1.6T NEs at each end of the span returns the OA power to normal operation. If the NE finds a failure on any of these checks, the NE(s) declares the failure condition which is reported to the CIT or OS, and the OA power will not restore the OA output power to normal operation.

Important! The Type 2 WAD does not require APSD.

LOS at ODU1C Input, Failure or Removal of ODU1C or ODU2C

When the NE detects a LOS at the input to an ODU1C circuit pack, the NE lowers the output power of the connecting OA to +10 dBm within one second, and declares an APSD condition which is reported along with the ODU1C LOS or removal to the CIT and OS.

When a NE detects the failure or the removal of an ODU1C (ODU2C if there is an association to the pack) circuit pack, the NE turns off the output power of the driving OA within one second, and declares an APSD condition which is reported along with the ODU1C or ODU2C failure or removal to the CIT and OS.

When the LOS clears, ODU failure clears or the ODU removal clears, the NE increases the output power of its receive OA incrementally back to its operating power. The NE reports a LOS-clear, ODU failure clear or the ODU removal clear, and APSD-clear messages to the CIT and OS.

□

Safety Requirements

IEC Laser Safety Hazard Levels

International Electro-technical Commission (IEC)-825 Parts 1 and 2 (issued 1993) specify the laser safety hazard levels. Products to be marketed as a Class 1 system with Hazard Level 1M circuit packs are safe and recommended by the IEC. The WaveStar® OLS 1.6T system uses laser equipment at 1550 nm, and meets or exceeds the requirements of the IEC Hazard Level 1M classification.

WaveStar® OLS 1.6T APSD Criteria

The WaveStar® OLS 1.6T system incorporates the following criteria in order to satisfy the IEC Hazard Level 1 requirements:

- Automatic power reduction mechanisms are employed on all outputs that exceed Class 1M laser safety limits. Therefore, any output that exceeds 17 dBm (or 50 mW) at 1550 nm on an 8.8 micron core, single mode fiber, incorporates APSD safety mechanisms.
- After APSD has been triggered and the optical output power reduced, the optical power may not exceed the Class 1 limit for that wavelength, which is 10 dBm (or 10 mW) for 1550 nm on a single mode fiber with an 8.8 micron core. This is required to obtain a Hazard Level 1 category.
- The automatic power reduction must take place no more than one second after the fiber disconnect or fiber break. This is an upper limit.
- The maximum power during the shutdown may not exceed 1.26 Watts (31 dBm) at 1550 nm on a single mode fiber with an 8.8 micron core.
- Restart of the signal may not occur within 99 seconds of the fiber disconnect or fiber break. This interval may be shorter if the continuity of the link can be verified before restart commences.

Laser Safety and Lucent Products

Lucent is committed to design optical fiber transmission equipment that minimizes operator and service personnel exposure to potentially hazardous levels of optical energy during service and operation. However, the continued safe use of optical transmission, optical cables and passive optical connection equipment requires a partnership with customers to assure that these systems are deployed and maintained in a safe manner. While automatic laser power reduction systems in Lucent″s higher power transmission equipment respond quickly to reduce laser emissions to safe levels in the event of a fiber disconnection or break, network operators must take proper action in the event of an alarm.

In a typical network, our optical cables and passive optical connection equipment can carry signals from various vendor sources that may have different degrees of safety controls. We urge our customers to properly assess the power of these sources to ensure that their safety controls are adequate.

To strengthen our partnership and to assure the continued safe deployment and use of optical networks, we urge you to use the following standards as your guides for laser safety for your customers and employees:

1. In the U.S.:
   ANSI Z136.1 - American National Standard for Safe Use of Lasers, and
   ANSI Z136.2 - American National Standard for Safe Use of Optical Fiber Communication Systems Utilizing Laser Diode and LED Sources.
2. Elsewhere:
   IEC 60825 Safety of Laser Products Part 1: Equipment classification, requirements and user's guide
   IEC 60825 Safety of Laser Products Part 2: Safety of optical fiber communication systems

Important! It should be noted that recent studies in Europe have suggested that power as low as 50 mW can ignite certain hazardous (classified) gaseous/vapor/mist/dust environments under worst case, dusty conditions. Standards are being written, both in the US and the International Electrotechnical Commission (IEC), to address optical installations in hazardous (classified) environments. If you must deploy high power systems in such environments, you should assess the impact.

Optical Safety (FDA/CDRH Class I and IEC-60825-1 Class 1 Classification)

The WaveStar® OLS 1.6T system is classified as an FDA/CDRH Class I and an IEC-60825-1 Class 1 laser product and assessed as an IEC-60825-2 Hazard Level 1M system as referenced in the Interpretation Sheet 76/224/ISH to IEC-60825-1, Amendment 2, January 2001, for use in IEC-60825-2.

IEC-60825-1 Class 1 Laser Product

Any end-to-end optical fiber communication system using enclosed or embedded laser transmitters or regenerators are designated as a Class 1 Laser Product. The total system is considered ″closed″ under normal operating conditions (that is, connectors are terminated and covers are closed) and is therefore categorized by IEC 60825 (issued 1993) as a Class 1 system.

Hazard Level Definition

Hazard Level refers to the potential hazard from laser emissions at any location in an end-to-end optical fiber communication system that may be accessible ***during service or in the event of a failure***.

Circuit Pack Classifications

Without an APSD procedure, the 1.6T OA output port power exceeds the Hazard Level 1M category. Therefore, the APSD procedure shall be performed on the OA output port to obtain the Hazard Level 1 Category.

The 1.6T ODU1, OA (DCM output port) and DCM output port are in the Hazard Level 1M category and do not require the APSD procedure.

The output ports of all remaining 1.6T circuit packs are in the Hazard Level 1 category and do not require the APSD procedure.

APSD Restart

Once a system has been repaired or the links have been re-established, APSD restores normal operation within five minutes.

□

APSD Trigger Conditions and Restart Procedure

Basic Theory of Operation for Fiber Cut Between Two NEs

When a fiber is cut from an OA in a NE to another OA in the downstream NE APSD is triggered. The scenarios that follow explain what happens when this occurs:

Two fiber cut scenario

Figure 8-1, “APSD for a Two Fiber Cut Scenario” (8-9) illustrates the automatic power shutdown procedure. Steps 1A to 6A show the automatic power shutdown procedure for OA3 in NE2. Similarly, steps 1B to 6B shows the automatic power shutdown for OA1 in NE1.

1. ***1A***- A fiber that connects the OA1 and OA2 is cut.
2. ***2A*** - A loss of signal power is detected in the OA pack and a loss of supervisory signal power is detected on the SUPVY pack in Network Element 2 (NE2).
3. ***3A*** - Software shuts down the power of the driving pumps of OA3 completely.
4. ***4A*** - Software turns off and on continuously (pulsing) the supervisory signal power to NE1.
5. 5A - Software raises ″APSD - Active Line″ condition with the OA that has power off (OA3) specified in the AID field.

6. ***6A*** - Software raises the Incoming Optical Line LOS Alarm when the SUPVY pack in the NE2 detects constant loss of supervisory signal power (that is not the ″APSD pulsing of the supervisory signal power″ signature).

Figure 8-1 APSD for a Two Fiber Cut Scenario

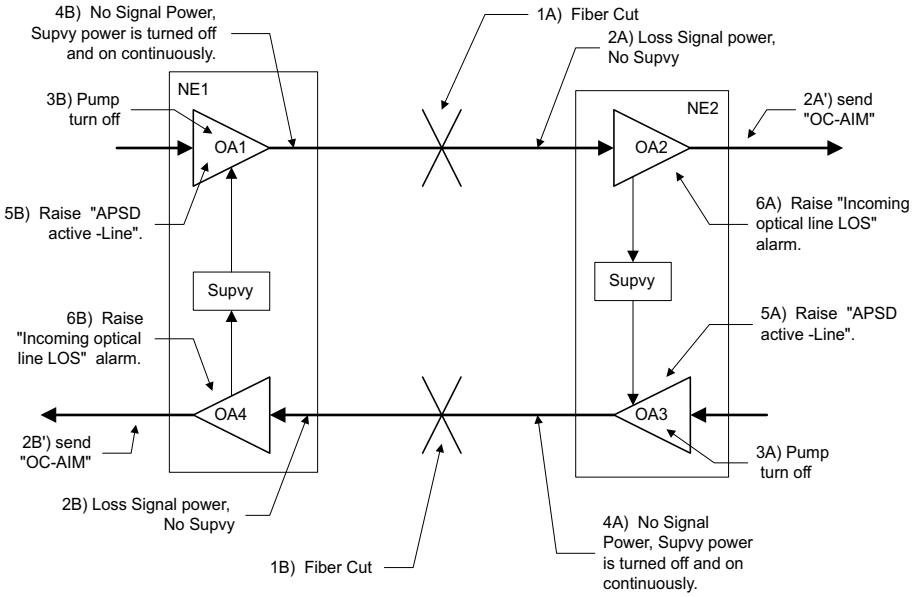

APSD Restart Scenario

Figure 8-2, “APSD Restart for Two-Fiber Cut Scenario” (8-10) illustrates the steps explained below:

1. Both fiber connections from NE1 and NE2 are restored.
2. SUPVY pack in NE2 detects the ″supervisory signal″. NE2 stops pulsing and turns on the supervisory signal power to Node NE1.
3. SUPVY LOS clearing shall be detected on an optical line with LOS present and APSD active.
4. NE2 checks for Local SUPVY data link (DL) recover on the optical line.
5. NE2 checks that the correct SUPVY line connection has been made. If there is a mismatch, the Software reports an ″SUPVY line-1 and line-2 connection mismatch″ condition.
6. NE2 checks that the correct OA-to-OA connection has been made.
7. NE2 checks for insufficient span loss less than 10 dB condition.

8. NE2 clears ″APSD active -line″ condition. NE2 turns on OA3 output power to a level that reflects its input power.
9. APSD Restart is done. OA in NE2 starts monitoring input power for APSD triggering conditions.
   A similar procedure is performed to restart the OA1 power on NE1.

Figure 8-2 APSD Restart for Two-Fiber Cut Scenario

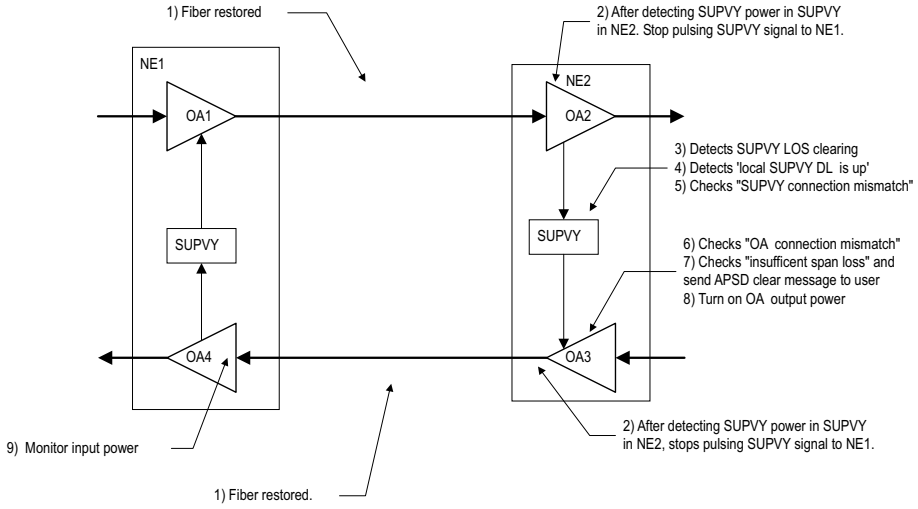

APSD for One-Fiber Cut Scenario

Figure 8-3, “APSD for One-Fiber Cut Scenario” (8-11) illustrates the automatic power shutdown procedure.

1. A fiber that connects the OA1 and OA2 is cut.
2. A loss of signal power is detected in the OA pack and a loss of supervisory signal power is detected on the SUPVY pack in Network Element 2 (NE2).
3. ***3A*** - Software shuts off the power of the driving pumps of OA3 completely.
4. Software turns off and on continuously (pulsing) the supervisory signal power. (Turning the supervisory signal power off and on continuously signals the Network Element 1 (NE1) to shut down OA1).
5. The SUPVY pack in the Network Element 2 (NE2) detects constant loss of supervisory signal power. The NE raises ″APSD Active-Line″ alarm message with the OA (OA3) that has power off specified in the AID field.

6. No fiber cut here from OA3 to OA4. Upon the receipt of the falling edge of the first pulse of the supervisory signal, a loss of signal of payload power is detected at the input of OA4, and a loss of supervisory signal power is detected at SUPVY circuit pack in NE1.
7. Software completely shuts off the power of OA1 pumps.
8. Software turns off and on (pulsing) the supervisory signal power to NE2. After a period of integration time, OA4 detects ″APSD's pulsing of the supervisory power″ signature. NE1 stops pulsing and turns on the supervisory signal power to NE2.
9. NE1 raises the ″APSD Active - Line″ alarm.

Figure 8-3 APSD for One-Fiber Cut Scenario

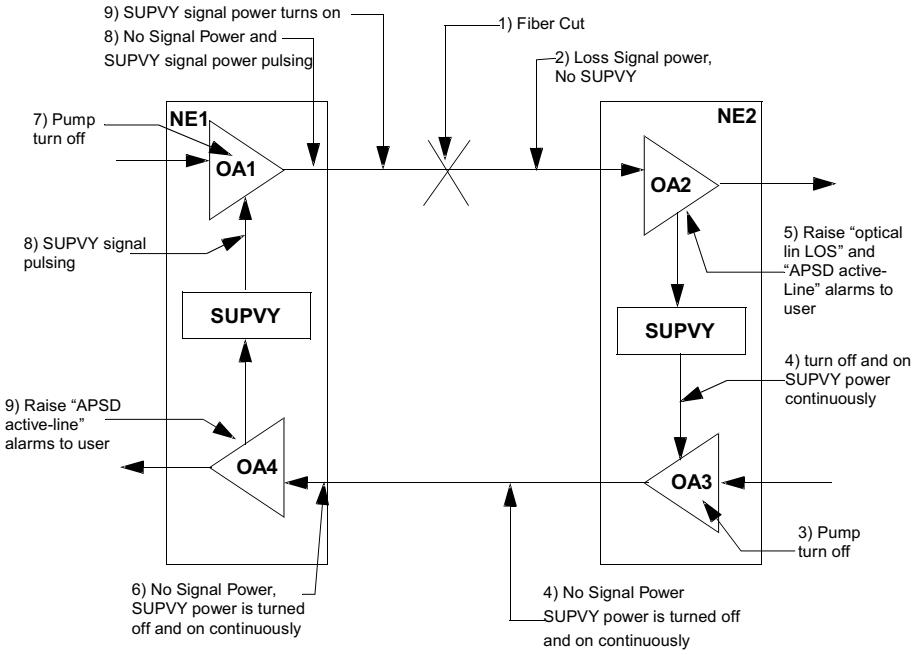

Trigger Conditions

The following table describes the Trigger Conditions for the Automatic Power Shut Down (APSD) that may occur. The detection of these conditions in a NE triggers Automatic Shutdown of the transmit OA in the upstream NE.

Trigger Condition
OA_LOS and SUPVY_LOS or

Trigger Condition
OA_LOS and SUPVY_Removal or
OA_LOS and SUPVY_Failure or
OA_LOS and OHCTL_Removal or
OA_LOS and OHCTL_Failure or
OA_Removal and SUPVY_LOS or
OA_Removal and SUPVY_Removal or
OA_Removal and SUPVY_Failure or
OA_Removal and OHCTL_Removal or
OA_Removal and OHCTL_Failure or
OA_Failure and SUPVY_LOS or
OA_Failure and SUPVY_Removal or
OA_Failure and SUPVY_Failure or
OA_Failure and OHCTL_Removal or
OA_Failure and OHCTL_Failure

Important! The OA_LOS is the Loss of Signal of traffic detected in the OA Pack. The SUPVY_LOS is the Loss of Signal for the incoming supervisory signal detected in the Supervisory Pack.

Basic Theory of Operation for WAD Configurations between two NEs

APSD will be triggered when there is a fiber cut from transmit OA output to outside plant fiber to receive OA pack input in remote NE.

See Figure 8-4, “Type 2 WAD Applications” (8-13) for an illustration of the Type 2 WAD application

APSD will not be triggered when there is a fiber cut anywhere within the WAD NE, from the receive to the OA output.

Figure 8-4 Type 2 WAD Applications

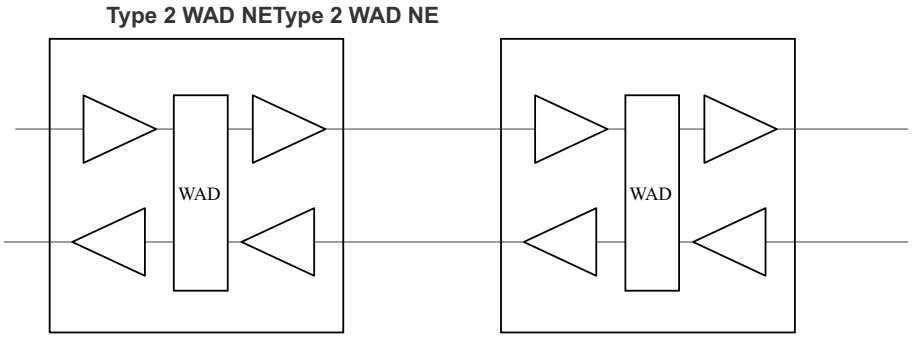

Basic Theory of Operation for an OA to ODU within the Same NE

See ODU APSD triggering conditions and APSD restart scenario described previously in section, "LOS at ODU1C Input, Failure or Removal of ODU1C or ODU2C" (8-4).

Figure 8-5, "OA to ODU - Removing an ODU pack" (8-13) illustrates how APSD is triggered when the ODU1 is removed.

Figure 8-5 OA to ODU - Removing an ODU pack

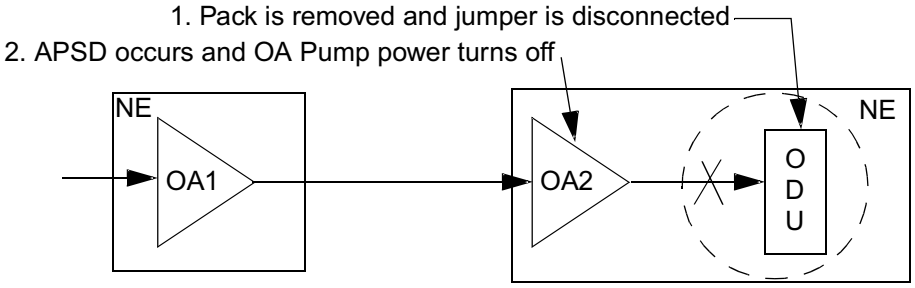

Other Trigger Conditions

The APSD trigger conditions that may occur are described in the table that follows. The detection of these ODU conditions trigger Automatic Power Shutdown of the associated OA that is driving the ODU within the same NE.

Trigger Condition
ODU1_LOS
ODU1_Failure

Trigger Condition
ODU1_Removal
ODU2_Failure (when there are ODU2 associations)
ODU2 Removal (when there are ODU2 associations)

Two Separate Fiber Cuts - One on Both Sides of a WAD or Ring Terminal

When there are two fiber cuts, on both sides of a WAD or Ring Terminal, the through channels will not be restored until both fiber cuts are restored. APSD will be triggered at both locations. If one of the fiber cuts is restored, APSD will recover and any add/drop channels in the local loop carried over the restored fiber cut will be restored. The through channels will not be restored since one fiber cut still remains.

The figure above shows an example of two separate fiber cuts on both sides of a WAD or Ring Terminal. In the example there are two separate fiber cuts, Fiber Cut A and Fiber Cut B. If Fiber Cut B is restored, APSD will recover at the NEs bounding Fiber Cut B. The add/drop channels between the WAD (or Ring Terminal) and the End Terminal (or Ring Terminal) carried over Fiber Cut B would be

restored. The through channels will not be restored since Fiber Cut A still exists and APSD is still active on the NEs bounding Fiber Cut A.

Figure 8-6 APSD for a Two Fiber Cut Scenario

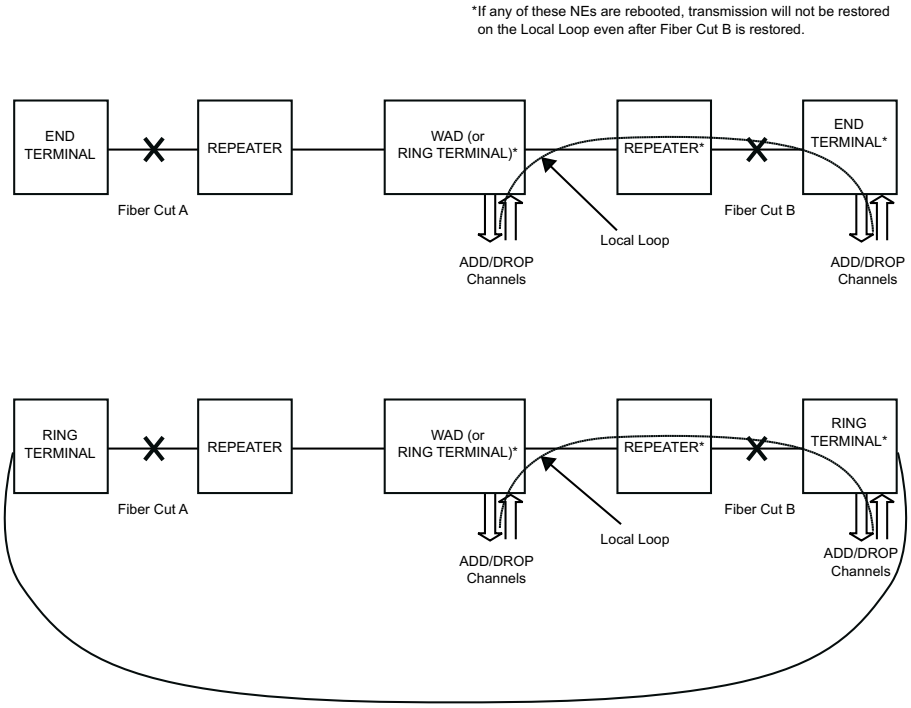

9 Using the Index Lists and Procedures

Overview

Purpose This chapter provides information for using the Index Lists (IXLs), Non-Trouble Procedures (NTPs), Task Oriented Procedures (TOPs), Trouble Assistance Procedures (TAPs), and Detail Level Procedures (DLPs) to perform acceptance, circuit order, operation, and trouble clearing tasks necessary to the WaveStar® OLS 1.6T.

Use of these procedures should be preceded by a general knowledge and understanding of the software for the OLS.

□

Getting Started

Chapter Organization

The procedural chapters in the paper version of this document are marked with colored tabs and provide the following information:

- The ***Acceptance*** tab (Yellow) covers procedures that are used to accept the hardware AFTER installation by someone else.
- The ***Circuit Order*** tab (Orange) covers procedures that are used when adding or deleting an OC-48/STM-16 channel or an OC-192 channel to an in-service OLS.
- The ***Operations*** tab (Green) covers procedures that can be used in day-to-day operations. Such procedures are to enter/change/delete a user login, to initiate or terminate a login session to a remote network element. A complete index listing is in ″Operations Tasks″ (12-1).
- The ***Trouble Clearing*** tab (Red) covers procedures on clearing the ″condition″ that caused the alarm and clearing trouble reports. These procedures are consistent with the maintenance philosophy given in ″TAP-100: Technical Assistance″ (13-3).
- The ***Detailed Level Procedures (DLP)*** tab (Blue) contains detailed ″how to″ instructions, beginning with ″DLP-501: Connect and Condition Craft Interface Terminal (CIT)″ (14-7).

Some procedures have an introductory overview section that explains the purpose of the procedure. Other procedures contain self-explanatory titles.

Locating the Desired Procedure

Perform the following steps to locate the desired procedure.

1. Determine the Procedure Classification for the task to be performed. For help, refer to Table 9-1, ″Procedure Classifications″ (9-3).
   If unsure about classification for a task, refer to the Table 9-4, “Master Task Index” (9-5).
2. After the Procedure Classification has been determined, proceed to the corresponding Task Index. Refer to Table 9-2, “Task Index” (9-3).

Each Task Index lists the available procedures for its classification. All procedures are directive in nature and consist of step-by-step instructions. Table 9-3, "Types of Procedures" (9-4) lists the different types of procedures that may be included for any task classification.

3. Locate the desired procedure from the Task Index, and go to the indicated task number.
4. Perform all steps in the procedure, including referring to other procedures as required. Typically, when referencing another directive-type procedure, it is not necessary to return to the calling procedure. However, when a non-directive Detailed Level Procedure (DLP) has been completed, it is important to return to the calling procedure.
5. Refer to ″IXL-001: Trouble Clearing Task Index″ (13-2) and ″Trouble Condition — TAP Cross Reference″ (13-6) to begin troubleshooting if asked to verify an expected system response and that response is not observed.
6. If the fault is still present after completing all applicable trouble-clearing procedures, contact the local or regional maintenance assistance group

Table 9-1 Procedure Classifications

Classification	Description
Acceptance	Procedures used to accept OLS systems AFTER installation.
Circuit Order	Procedures used when adding or deleting work order items to an in-service OLS.
Operations	Procedures used in day-to-day operations.
Trouble Clearing	Procedures used to clear conditions that cause alarms and trouble clearing reports.
Detailed Level Procedure	Detailed instructions.

Table 9-2 Task Index

Classification	Tab	Corresponding Task Chapter
Acceptance	Yellow	″Acceptance Tasks″ (10-1), refer to the ″IXL-001: Acceptance Task Index″ (10-2)

Table 9-2 Task Index (continued)

Classification	Tab	Corresponding Task Chapter
Circuit Order	Orange	″Circuit Order Tasks″ (11-1), refer to the ″IXL-001: Circuit Order Task Index″ (11-2)
Operation	Green	″Operations Tasks″ (12-1), refer to the ″IXL-001: Operations Tasks Index″ (12-2)
Trouble Clearing	Red	″Trouble Clearing Tasks″ (13-1), refer to the ″IXL-001: Trouble Clearing Task Index″ (13-2)
Detailed Level Procedures	Blue	″Detail Level Procedures″ (14-1), refer to the ″IXL-001: Detail Level Procedures Index″ (14-2)

Table 9-3 Types of Procedures

Procedure	Description
Non-Trouble-clearing (NTP)	Normal work items other than trouble clearing.
Trouble Analysis (TAP)	Step-by-step trouble clearing instructions to locate and/or fix troubles.
Detailed Level (DLP)	Step-by-step procedures.

□

Master Task Index

Master Task Index Table 9-4, "Master Task Index" (9-5) is lists all documented tasks.

Table 9-4 Master Task Index

Task Description	Classification	Procedure
Accept WaveStar® OLS 1.6T	Acceptance	″NTP-002: Accept WaveStar® OLS 1.6T″ (10-3)
Add Optical Channel to In-Service WaveStar® OLS 1.6T	Circuit Order	″NTP-002: Add Optical Channel to In-Service WaveStar® OLS 1.6T″ (11-3)
Clear CR/PROMPT, MJ/DEFERRED or MN LED	Trouble Clearing	″TAP-102: Clear CR/PROMPT, MJ/DEFERRED, MN LED, or TCA″ (13-5)
Clear Trouble in CIT (CIT Does Not Respond to Commands)	Trouble Clearing	″TAP-128: Clear Trouble In CIT (CIT Does Not Respond to Commands)″ (13-74)
Clear Trouble Report	Trouble Clearing	″TAP-104: Clear Trouble Report″ (13-14)
Copy Software From One Network Element to Another Network Element	Operation	″NTP-003: Copy Software from One Network Element to Another Network Element″ (12-5)
Delete Optical Channel from In-Service WaveStar® OLS 1.6T	Circuit Order	″NTP-006: Delete Optical Channel from In-Service WaveStar® OLS 1.6T″ (11-9)
Initiate or Terminate Login Session to a Network Element Using WaveStar® OLS 1.6T CIT	Detailed Level Procedure	″DLP-518: Initiate or Terminate Login Session to a Network Element Using WaveStar® OLS 1.6T CIT″ (14-43)
Install Software (Initial Installation/Upgrade/Change) into the CIT and a Network Element	Operation	″NTP-002: Install Software (Initial Installation/Upgrade/Change) into the CIT and a Network Element″ (12-3)
Restore Network Element After Power Loss	Trouble Clearing	″TAP-130: Restore Network Element Operation After Power Loss″ (13-79)

Table 9-4 Master Task Index (continued)

Task Description	Classification	Procedure
Technical Assistance	Trouble Clearing	″TAP-100: Technical Assistance″ (13-3)

Recommended Test Equipment

Equipment for Procedures

Table 9-5, "List of Recommended Test Equipment" (9-7) provides the recommended test equipment, signal types and purpose.

Table 9-5 List of Recommended Test Equipment

Equipment/Accessories	Signal Types	Purpose/Required Specifications
Multi -wavelength Meter	Not applicable	Measures wavelengths from 1530 nm to 1562 nm and power up to +5 dBm (at OA MON ports, ODU, OMU, or OTU output port), and OSNR
OC-48 Test Set	OC-48	Measures BER and B1 errors
OC-192 Test Set	OC-192	Measures BER and B1 errors
Power Meter	Not applicable	Measures up to +5 dBm (at OA MON ports, ODU, OMU, SUPVY or OTU output port.)
Fiberscope	Not applicable	Visually inspects the fibers
Cleaning material	Not applicable	Cleans fiber tips/connectors

Notes:

1. Equipment made by other vendors is acceptable only if the equipment meets listed requirements.
2. Lucent-recommended calibration period: Annually.

Faulty Equipment

Return faulty equipment to the following address for repair:

Lucent Technologies Network Systems

Returned Goods Dept.

Dept. 11MV287122

1600 Osgood Street

North Andover, Massachusetts 01845

□

10 Acceptance Tasks

Overview

Purpose ***Acceptance Tasks*** are procedures used to accept hardware ***after*** installation by someone else. See Table 10-1, "Acceptance Task Index" (10-2) for a list of procedures.

□

IXL-001: Acceptance Task Index

Table 10-1 Acceptance Procedure Acceptance Task Index

Task Description	Procedure
Accept WaveStar OLS 1.6T User/Service Manual (U/SM)	“NTP-002: Accept WaveStar® OLS 1.6T ” (10-3)

NTP-002: Accept WaveStar® OLS 1.6T

This acceptance procedure can be performed from any OLS network element connected in the system. This procedure is only used if the OLS was installed by someone else. If the installation has not been completed, notify the installation personnel or refer to the ***WaveStar® OLS 1.6T Installation Manual*** to complete the installation.

Do not perform this procedure if you completed the installation following the procedures in the WaveStar® OLS 1.6T Installation Manual.

Required Test Equipment

The following test equipment is required:

- Craft Interface Terminal (CIT)
- Wrist Strap

WARNING

Unterminated optical connectors may emit invisible laser radiation. Eye damage may occur if beam is viewed directly or with improper optical instruments. Avoid direct exposure to beam.

CAUTION

Use a static ground wrist strap whenever handling circuit packs or working on an OLS network element to prevent electrostatic discharge (ESD) damage to sensitive components. See Electrostatic Discharge (ESD) Considerations in "Trouble Clearing Tasks" (13-1).

Referenced Procedures

Acceptance: "NTP-002: Accept WaveStar® OLS 1.6T" (10-3) refers to the following procedures:

- ″DLP-501: Connect and Condition Craft Interface Terminal (CIT)″
- ″DLP-502: Test LEDs on Circuit Packs″ (14-6)
- ″DLP-506: Verify WaveStar® OLS 1.6T Elements Are Connected″ (14-8)
- ″DLP-518: Initiate or Terminate Login Session to a Network Element Using WaveStar® OLS 1.6T CIT″ (14-43)

Procedure

1 Verify that the CR/PROMPT, MJ/DEFERRED or MN LED is off at the EI circuit pack (User Panel).

Important! If at any point in this procedure any WaveStar® OLS 1.6T network element or system fails to respond in the indicated way, refer the trouble to installation personnel.

2 Connect the WaveStar® OLS 1.6T to the local OLS network element and log into the network element to be tested. For details, refer to ″DLP-501: Connect and Condition Craft Interface Terminal (CIT)″ (14-4).

3 Verify that the OLS network elements are connected per the engineered configuration. For details, refer to ″DLP-506: Verify WaveStar® OLS 1.6T Elements Are Connected″ (14-8).

Important! If you are logged in to a remote network element, you will require assistance at the distant network element in order to perform Step 4 .

4 Test the LED. For details, refer to ″DLP-502: Test LEDs on Circuit Packs″ (14-6).

5 At the CIT, click on the **FAULT-NE Condition List**.

6 Are there any alarms indicated on the report?

IF...	THEN...
NO	Continue with Step 7
YES	Trouble must be referred to the installation personnel

7 Initiate a login to one of the other OLS network elements. For details, refer to ″DLP-518: Initiate or Terminate Login Session to a Network Element Using WaveStar® OLS 1.6T CIT″ (14-43).

8 Repeat Step 4 through Step 7 for that WaveStar® OLS 1.6T NE.

9 Terminate the login. For details, refer to ″DLP-518: Initiate or Terminate Login Session to a NE Using WaveStar® OLS 1.6T CIT″ (14-43).

10 If required, notify personnel at the remote maintenance site (Operations Support center) that the WaveStar® OLS 1.6T is ready for any operational tests.

11 The OLS has passed this acceptance test and is now ready to provide service.

END OF STEPS

□

11 Circuit Order Tasks

Overview

Purpose The ***Circuit Order Tasks*** cover procedures that are used when adding or deleting work order items for an optical line, an OC-48/STM-16 channel, or an OC-192 channel to an in-service WaveStar® OLS 1.6T. Refer to Table 11-1, “Circuit Order Task Index” (11-2) for a list of all Circuit Order Tasks.

□

IXL-001: Circuit Order Task Index

Circuit Order Tasks Table 11-1, "Circuit Order Task Index" (11-2) lists the Circuit Order Tasks.

Table 11-1 Circuit Order Task Index

Task Description	Procedure
Add Optical Channel to In-Service WaveStar OLS 1.6T User/Service Manual (U/SM)	"NTP-002: Add Optical Channel to In-Service WaveStar® OLS 1.6T" (11-3)
Delete Optical Channel from In-Service WaveStar OLS 1.6T User/Service Manual (U/SM)	"NTP-006: Delete Optical Channel from In-Service WaveStar® OLS 1.6T" (11-9)

NTP-002: Add Optical Channel to In-Service WaveStar® OLS 1.6T

This procedure provides a list of actions required to add an optical channel to an in-service OLS. Work functions are first completed at the transmit end of the channel, then continues at the receive end.

Refer to the*WaveStar® OLS 1.6T Installation Guide (365-575-790)*and office records to identify pre-installed and labeled fibers in the bay that connect to various circuit pack slots.

Required Test Equipment

The following test equipment is required:

- Craft Interface Terminal (CIT)
- Wrist Strap

Referenced Procedures

This procedure makes references to the following procedures.

- ″TAP-100: Technical Assistance″ (13-3)
- ″DLP-501: Connect and Condition Craft Interface Terminal (CIT)″ (14-4)
- ″DLP-510: Inspect and Clean Optical Fiber Connectors″ (14-12)
- ″DLP-511: Install/Remove Shelf Cover″ (14-19)
- ″DLP-514: Remove and/or Install Circuit Pack″ (14-30)
- ″DLP-518: Initiate or Terminate Login Session to a NE Using WaveStar® OLS 1.6T CIT″ (14-43)
- ″DLP-528: LBO Applications″ (14-60)

CAUTION

If you are using the CIT in cut-through mode, in order to prevent a transmission interruption be aware of the following: Before any associations are entered, ensure that the related ODU is plugged into the correct slot.

CAUTION

During initial software installation and when circuit packs are inserted into a running system, there will be an automatic upgrade of the firmware on the circuit packs to the latest version. Flashing green LEDs on the circuit pack faceplates will indicate that the upgrade is occurring (typically less than 30 seconds). Please DO NOT remove the circuit pack during this upgrade because it may cause damage to the affected pack. After the pack LEDs stop flashing it is then safe to remove the packs or power down the system as needed.

CAUTION

Use a static ground wrist strap whenever handling circuit packs or working on an Optical Line System (OLS) end terminal to prevent electrostatic discharge (ESD) damage to sensitive components. See "Electrostatic Discharge (ESD) Considerations" (13-3) in "TAP-100: Technical Assistance" (13-3).

Procedure **Important!** DO THE STEPS BELOW IN THE ORDER LISTED

1 Obtain the circuit order instructions to add an optical channel.

2 Remove the appropriate shelf cover. All connections can be accessed from the front. For details, refer to "**DLP-511: Install/Remove Shelf Cover**" (14-19).

3 Connect the craft interface terminal (CIT) and log in. For details, refer to "**DLP-501: Connect and Condition Craft Interface Terminal (CIT)**"(14-4).

END OF STEPS

At Transmit End of Channel

1 Initiate a login to each of the remaining network elements. For details, refer to ″**DLP-518: Initiate or Terminate Login Session to a Network Element Using WaveStar® OLS 1.6T CIT**″ (14-43).

2 At the CIT, click on the **FAULT-NE Condition List** to obtain a report for each of the network elements.

3 Are there any alarm conditions listed in the reports?

IF...	THEN...
NO	Continue with Step 4.
YES	Proceed to ″TAP-102: Clear CR/PROMPT, MJ/DEFERRED, MN LED, or TCA″ (13-5)

4 Are the Optical Channel being added a through channel at a WAD NE?

IF...	THEN...
NO	Continue with Step 5.
YES	Continue with Step 10.

5 Identify the bay, shelf and slot for the OTU assigned by the circuit order.

6 Remove the appropriate shelf cover. For details, refer to "**DLP-511: Install/Remove Shelf Cover**" (14-19).

7 Is the correct type OTU currently installed in the assigned slot?

IF...	THEN...
NO	Continue with Step 8.
YES	Continue with Step 11.

8 Remove the apparatus blank or incorrect type OTU from the assigned slot. For details, refer to **"DLP-509: Install/Remove Apparatus Blank" (14-11)/DLP-514: Remove and/or Install Circuit Pack"** (14-30).

9 Retrieve all associations defined for the assigned slot(s). Delete all invalid associations.

10 Install the correct type OTU into the assigned slot. For details, refer to **"DLP-514: Remove and/or Install Circuit Pack"** (14-30)

11 At the CIT, select **CONFIGURATION-Circuit Connection** and use the Circuit Connection Wizard to add the required associations related to the Optical Channel. For details, refer to Chapter 4, Provisioning (4-1).

12 Install the proper LBO into the OTU (OUT ()) port. For details, refer to "**DLP-528: LBO Applications**".

13 Is the Optical Channel being added a through channel at a WAD NE?

IF...	THEN...
NO	Continue with Step 13
YES	***STOP! YOU HAVE COMPLETED THIS PROCEDURE.***

14 Install the proper LBO into the OTU IN (1/2) port. For details, refer to "**DLP-524: Connect Optical Power Meter for Measurement at OTU () IN () Port**".

END OF STEPS

At Receive End of Channel

Important! You will need assistance at the receive end or travel to that location.

1 Identify the bay, shelf and slot for this Optical Channel assigned by the circuit order.

2 Remove the appropriate shelf cover. For details, refer to **"DLP-511: Install/Remove Shelf Cover"** (14-19).

3 Remove the protector cap and clean the ODU OUT () port on the ODU for the channel being placed in service. For details, refer to **"DLP-510: Inspect and Clean Optical Fiber Connectors"** (14-12).

4 Is the correct type OTU currently installed in the assigned slot?

IF...	THEN...
NO	Continue with Step 5.
YES	Go to Step 7.

5 Remove the apparatus blank or incorrect type OTU from the assigned slot. For details, refer to **"DLP-509: Install/Remove Apparatus Blank" (14-11)/"DLP-514: Remove and/or Install Circuit Pack"** (14-30).

6 Install the correct type OTU in the assigned slot. For details, refer to **"DLP-514: Remove and/or Install Circuit Pack"** (14-30).

7 At the CIT, select **CONFIGURATION-Circuit Connection** and use the Circuit Connection Wizard to add the required associations related to the new circuit pack. For details on circuit provisioning, refer to Chapter 4, Provisioning (4-1).

8 Install the proper LBO into the OTU IN (1/2) port. For details, refer to ″**DLP-524: Connect Optical Power Meter for Measurement at OTU () IN () Port**″ (14-51).

9 For the through OTU, install the proper LBO into the OTU (OUT( )) port. For details, refer to "DLP-528: LBO Application" (14-57).

10 Clean and connect fiber jumpers into the OTU LBO.

11 Baseline the added optical channel. For details, refer to "DLP-529: Baseline Optical Parameters" (14-72).

12 Replace the shelf cover.

END OF STEPS

□

NTP-006: Delete Optical Channel from In-Service WaveStar® OLS 1.6T

This procedure provides a list of actions required to delete an optical channel from an in-service OLS. The optical fiber jumpers are removed first for the channel being deleted, then all network elements are updated.

Refer to the *WaveStar® OLS 1.6T Installation Guide*, (365-575-790) and office records to identify installed and labeled fibers in the bay that connect to various circuit pack slots

Required Test Equipment

The following test equipment is required:

- Craft Interface Terminal (CIT)
- Wrist Strap

Referenced Procedures

Circuit Order: "NTP-006: Delete Optical Channel from In-Service WaveStar® OLS 1.6T" (11-9) refers to the following procedures:

- "TAP-100: Technical Assistance" (13-3)
- "DLP-501: Connect and Condition Craft Interface Terminal (CIT)" (14-4)
- "DLP-511: Install/Remove Shelf Cover" (14-19)
- "DLP-514: Remove and/or Install Circuit Pack" (14-30)
- "DLP-518: Initiate or Terminate Login Session to a Network Element Using WaveStar® OLS 1.6T CIT" (14-43)

CAUTION

If you are using the CIT in cut-through mode, in order to prevent a transmission interruption be aware of the following: Before removing ODU2/3 circuit packs , ensure that all associations related to that ODU is plugged have been deleted.

CAUTION

Use a static ground wrist strap whenever handling circuit packs or working on an OLS end terminal to prevent electrostatic discharge damage to sensitive components. See "Electrostatic Discharge (ESD) Considerations" (13-3) in "TAP-100: Technical Assistance" (13-3).

CAUTION

Use care in locating the optical channel, line and assigned ports to avoid possible service interruption.

Procedure **Important!** DO THE STEPS BELOW IN THE ORDER LISTED

1 Obtain the circuit order instructions to delete an assigned channel from the associated optical line.

END OF STEPS

At the (Near) Terminal

1 Remove the appropriate shelf covers. All connections can be accessed from the front. For details, refer to **"DLP-511: Install/Remove Shelf Cover"** (14-19).

2 Connect the CIT and log in. For details, refer to **"DLP-501: Connect and Condition Craft Interface Terminal (CIT)"** (14-4).

3 At the CIT, select**FAULT-NE Condition List** to obtain a report.

4 From the report, verify that there are no alarms other than those on the channel being deleted. Clear any alarms not associated with the deleted channel before proceeding.

Important! PERFORM THE STEPS BELOW IN THE ORDER LISTED

5 Locate the specific optical channel to be deleted at the OMU and ODU (optical fiber pair).

6 Disconnect the transmit optical fiber from the OMU IN () port for the channel being deleted from service on the optical line(s) specified in the circuit order instructions.

7 Place protector cap over the end of the optical fiber and over the OMU IN () port.

8 Disconnect the optical fiber from the ODU OUT () port for the channel being deleted from service on the optical line specified in the circuit order instructions.

9 Place protector cap over the end of the optical fiber and over the ODU OUT ()port.

10 Is the Optical Channel being deleted at a through channel at a WAD NE?

IF...	THEN...
NO	Continue with Step 11.
YES	Continue with Step 20.

11 Identify the bay, shelf and slot for the OTU being disconnected by the circuit order.

12 Remove the appropriate shelf cover. All connections can be accessed from the front. For details, refer to **"DLP-511: Install/Remove Shelf Cover"** (14-19).

13 Disconnect the optical fiber at the OTU OUT () port for the channel being deleted from service on the optical line(s) specified in the circuit order instructions.

14 Place protector cap over the end of the optical fiber and over the OTU OUT () port.

15 Disconnect the optical fiber from the OTU IN () port for the channel being deleted from service on the optical line(s) specified in the circuit order instructions.

16 Place protector cap over the end of the optical fiber and over the OTU IN () port.

17 Is the OTU to remain in the shelf?

IF...	THEN...
NO	Continue with Step 18.
YES	Continue with Step 20.

18 Remove the OTU from the shelf. For details, refer to **"DLP-514: Remove and/or Install Circuit Pack"** (14-30).

19 Install the apparatus blank into the assigned slot. For details, refer to **"DLP-509: Install/Remove Apparatus Blank"** (14-11).

20 At the CIT, select **CONFIGURATION-Circuit Connection** and use the Circuit Connection Wizard to remove the existing associations related to this Optical Channel.

END OF STEPS

At the (Far) Terminal

Important! You may travel to the other terminal or obtain assistance at that terminal.

1 Repeat the steps from "At the (Near) Terminal" (11-10) at the other terminal (far terminal).

2 Replace the shelf cover(s).

3 Baseline the deleted optical channel. For help, refer to "**DLP-529: Baseline Optical Parameters**" (14-74).

4 The optical channel has been deleted from service.

END OF STEPS

□

12 Operations Tasks

Overview

Purpose This chapter provides procedures to use in daily operations. Procedures include CIT software upgrades, copying software, and initiating or terminating a login session to a remote network element. Refer to Table 12-1, “Operations Task Index” (12-2) for a list of all Operations Tasks.

□

IXL-001: Operations Tasks Index

Operations Task Index Table 12-1, "Operations Task Index" (12-2) lists the Operations Tasks.

Table 12-1 Operations Task Index

Task Description	Procedure
Install Software (Initial Installation/Upgrade/Change) into CIT and WaveStar® OLS 1.6T NE	"NTP-002: Install Software (Initial Installation/Upgrade/Change) into the CIT and a Network Element" (12-3)
Copy Software from One WaveStar® OLS 1.6T NE to Another NE	"NTP-003: Copy Software from One Network Element to Another Network Element" (12-5)
Initiate or Terminate Login Session to a Remote NE Using WaveStar® OLS 1.6T CIT	"DLP-518: Initiate or Terminate Login Session to a Network Element Using WaveStar® OLS 1.6T CIT" (14-41)
Modify, Disable, Enable or Add a User Login and/or Password	"DLP-519: Modify, Disable, Enable or Add a User's Login and/or Password" (14-43)
Handle and Package Bays, Subrack Assemblies, and Individual Circuit Packs for Transport	"DLP-531: Packaging of Lucent Technologies Bays, Subrack Assemblies, and Individual Circuit Packs for Return" (14-86)

□

NTP-002: Install Software (Initial Installation/Upgrade/Change) into the CIT and a Network Element

This procedure describes the installation process required to install software into a CIT and a WaveStar® OLS 1.6T NE.

Required Test Equipment

The following test equipment is required:

- Craft Interface Terminal (CIT)
- Wrist Strap

CAUTION

During initial software installation and when circuit packs are inserted into a running system, there will be an automatic upgrade of the firmware on the circuit packs to the latest version. Flashing green LEDs on the circuit pack faceplates will indicate that the upgrade is occurring (typically less than 30 seconds). Please DO NOT remove the circuit pack during this upgrade because it may cause damage to the affected pack. After the pack LEDs stop flashing it is then safe to remove the packs or power down the system as needed.

Important! APSD is not available until the reboot is completed.

CAUTION

When installing software, the CIT-PC software must be the same release or higher than the software currently running in the network element.

Important! The WaveStar® OLS 1.6T CIT software is available exclusively on CD-ROM.

Procedure **Important!** DO THE STEPS BELOW IN THE ORDER LISTED

1 Verify that all items included in the software package have been received. Refer to the WaveStar® OLS 1.6T Software Ordering Guide.

Important! The WaveStar® OLS 1.6T Software Ordering Guide is the primary reference when ordering software for the WaveStar® OLS 1.6T.

2 Refer to the WaveStar® OLS 1.6T Software Release Description to locate the appropriate software download procedure for the software release being installed.

Important! Wait at least 30 sec before attempting another download after a download cancellation.

END OF STEPS

□

NTP-003: Copy Software from One Network Element to Another Network Element

This procedure describes the process required to copy software from one WaveStar® OLS 1.6T NE to another NE through the SUPVY Data Link residing in the supervisory signal.

Required Test Equipment

The following test equipment is required:

- Craft Interface Terminal (CIT)
- Wrist Strap

Referenced Procedures

Operation: "NTP-003: Copy Software from One Network Element to Another Network Element" (12-5) refers to the following procedures:

- DLP-501
- DLP-518

Important! APSD is not available until reboot is completed.

Procedure **Important!** PERFORM THE STEPS BELOW IN THE ORDER LISTED

1 If required, connect the CIT to the local WaveStar® OLS 1.6T network element and condition it. For details, refer to "DLP-501: Connect and Condition Craft Interface Terminal (CIT)" (14-4).

2 Initiate a Login Session to the local network element. For details, refer to "DLP-501: Connect and Condition Craft Interface Terminal (CIT)" (14-4).

3 Verify that there are no active alarms or status conditions by selecting **FAULT-NE Condition List**. Review the report and clear any conditions before proceeding with this procedure.

4 Refer to *WaveStar® Optical Line System (OLS) 1.6T Software Release Description* (shipped with the software) and perform the remote download procedure.

END OF STEPS

□

13 Trouble Clearing Tasks

Overview

Purpose This chapter covers procedures on clearing the conditions that cause an alarm and clearing trouble reports. These procedures are consistent with the maintenance philosophy given in ″TAP-100: Technical Assistance″ (13-3).

Important! Before attempting any trouble clearing procedures, refer to ″TAP-100: Technical Assistance″ (13-3) for a list of all Trouble Clearing Tasks and the **correct order** in which to perform these tasks.

□

IXL-001: Trouble Clearing Task Index

Task Index Table 13-1, ″Trouble Clearing Task Index″ (13-2) is a list of all Trouble Clearing Tasks.

Table 13-1 Trouble Clearing Task Index

Task Description	Procedure
Technical Assistance	″TAP-100: Technical Assistance″ (13-3)
Clear CR/PROMPT, MJ/DEFERRED, MN LED, or TCA	″TAP-102: Clear CR/PROMPT, MJ/DEFERRED, MN LED, or TCA″ (13-5)
Clear Trouble Report (of Bad Outgoing Signals From Local Network Element)	″TAP-104: Clear Trouble Report″ (13-14)
Clear Trouble in CIT (CIT Does Not Respond to Commands)	″TAP-128: Clear Trouble In CIT (CIT Does Not Respond to Commands)″ (13-74)
Restore Network Element Operation After Power Loss	″TAP-130: Restore Network Element Operation After Power Loss″ (13-79)

TAP-100: Technical Assistance

Overview

Successful technical assistance relies on gathering system information. A local visual inspection of the equipment may be made, but most internal hardware problems are detected and corrected using the WaveStar® OLS 1.6T CIT. The WaveStar® OLS 1.6T CIT is used to obtain detailed information about the system. The WaveStar® OLS 1.6T CIT retrieves detailed reports about performance monitoring, alarms and status, and configurations for the local and remote WaveStar® OLS 1.6T NEs.

Trouble Analysis Procedures (TAPs)

The Trouble Analysis Procedures (TAPs) found in this document provide detailed instructions on how-to:

- replace faulty circuit packs
- obtain performance reports
- retrieve alarm and status reports

This information is analyzed to determine the status of the system. If a condition cannot be corrected, the technician is then directed to contact the local maintenance engineering group for technical assistance.

Technical Assistance

The technician makes decisions regarding trouble analysis, corrective action, and obtaining assistance. The technician and the local technical support staff may choose to continue trouble analysis based on knowledge or experience with the WaveStar® OLS 1.6T, or they may elect to obtain assistance by calling Customer Technical Assistance Management (CTAM) 1-800 225 4672 (United States) and 1-630 224-4672 (International), in accordance with local procedures.

Circuit Pack Failures

Circuit pack failures are identified by constantly lit LEDs and reported by network alarms and reports.

Circuit packs are replaced in a specified sequence, but only one circuit pack is replaced at a time. If a trouble is not cleared after replacing a circuit pack, the original circuit pack should be reinstalled. This reduces the chances of returning nondefective circuit packs for repair.

Electrostatic Discharge (ESD) Considerations

Any integrated circuit on a circuit pack can be damaged by static electricity that builds up within a work area, particularly in areas with low relative humidity. This static buildup on work surfaces and on personnel and their clothing is produced by the various charging effects of even simple movements and by contact between various objects.

As a rule, the greatest potential for electrostatic damage occurs in areas with the lowest relative humidity. But, because such damage can occur anywhere, all personnel handling circuit packs must adhere to the following precautions:

1. Keep all food wrappers, plastics, and Styrofoam containers away from all circuit packs.
2. Read all warning labels on bags and cartons containing electronic components before opening.
3. If possible, open all circuit packs at a static-safe work position using properly grounded wrist straps and table mats that dissipate static electricity.
4. Whenever possible, wait to remove circuit packs from their protective antistatic packaging until time to insert them into a shelf.
5. Never touch a circuit pack's components, conductors, or connector pins. Handle all circuit packs only by the faceplate or latch, or by the top and bottom outermost edges.
6. Always wear a grounded wrist strap or wear a heel strap, and stand on a grounded, static-dissipating floor mat when handling circuit packs (storing, installing, or removing) or when working on backplanes.
7. Always store and transport circuit packs in static-safe packages. (Shielding is not required unless specified.)
8. When removing a circuit pack from the shelf, immediately put it into a static-safe package.
9. Try to keep relative humidity above 20 percent.
10. OLS network elements are equipped with grounding jacks for connecting the static ground wrist strap. The jacks are located on the user panel and on the filter panel.
11. Keep the electromagnetic interference (EMI)/ESD protective front shelf covers closed at all times. Close the cover immediately after a maintenance procedure such as replacing a circuit pack.

□

TAP-102: Clear CR/PROMPT, MJ/DEFERRED, MN LED, or TCA

Overview

This procedure is used to clear the Prompt Maintenance Alarm (PMA) conditions listed when you click the **FAULT-NE Condition List**. Clear alarm conditions in the following order: controllers(s), transmission, other.

Procedure

Important! If at any time during the following procedure you observe that the PWR OUTPUT LED on the circuit breakers of the addressed shelf is not lit, proceed to ″TAP-119: Clear ’Circuit Breaker/Power Failure ″A or B″ or ″A and B″’″ (13-53) to restore power to the shelf. Alarm condition reports (Alarm List and Condition List) automatically update with alarm status changes.

1 Is the CIT conditioned and connected to the WaveStar® OLS 1.6T NE?

IF...	THEN...
YES	Continue with Step 2.
NO	Complete ″DLP-501: Connect and Condition Craft Interface Terminal (CIT)″ (14-4), and return to this procedure.

2 At the CIT, click on the **FAULT-NE Condition List** to obtain a report of the alarms and conditions.

3 Record the information in the AID and the Description columns for the topmost entry in the report.

4 Is there an `ENV-(#)` or `CONT-(#)`in the AID column recorded in Step 3?

IF...	THEN...
YES	Proceed to ″TAP-107: Address Environmental Input and/or Control Output Condition″ (13-19).
NO	Continue with Step 5.

5 Find the Description information that was recorded in Step 3 in Table 13-2, ″Trouble Condition — TAP Cross Reference″ (13-9) and go to the referenced TAP.

END OF STEPS

Refer to ″Trouble Condition — TAP Cross Reference″ (13-6) for a list of conditions cross-referenced to their respective trouble clearing tasks.

Table 13-2 Trouble Condition — TAP Cross Reference

DESCRIPTION	Proceed to:
APSD active-line	"TAP-166: Clear 'APSD Active-Line' " (13-107)
APSD active-ODU	"TAP-167: Clear 'APSD Active-ODU' " (13-109)
BACKUP:IP	"TAP-117: Clear 'BACKUP:IP, CPYPGM:IP, INITSWD:IP, Restore:IP and SW-DWNLD:IP'" (13-50)
Bay Bus Failure	"TAP-184: Clear 'Bay Bus Failure, BC Bus Failure, OH Bus Failure' " (13-128)
BC Bus Failure	"TAP-184: Clear 'Bay Bus Failure, BC Bus Failure, OH Bus Failure' " (13-128)
BOS failure	"TAP-113: Clear 'FLASH or BOS Failure'" (13-39)
BOS removed	"TAP-112: Clear 'Circuit Pack Removed'" (13-34)
Circuit breaker/power failure ″A or B″ or ″A and ″B″	"TAP-119: Clear 'Circuit Breaker/Power Failure ″A or B″ or ″A and B″' " (13-52)
Circuit Pack Booting (Various)	"TAP-129: Address 'Circuit Pack Booting'" (13-77)
Clamping Transmit OA to Output O-Channel Power	"TAP-211: Clear 'Clamping Transmit OA to Output O-Channel Power'" (13-173)

Table 13-2 Trouble Condition — TAP Cross Reference (continued)

DESCRIPTION	Proceed to:
Client Synchronization Failure	"TAP-131: Clear 'Client Synchronization Failure' " (13-84)
Clogged Dust Filter 1	"TAP-162: Clear 'Fan ″1″ or ″2″ or Clogged Dust Filter ″1″or ″2″ Failure' " (13-105)
Clogged Dust Filter 2	"TAP-162: Clear 'Fan ″1″ or ″2″ or Clogged Dust Filter ″1″or ″2″ Failure' " (13-105)
CPYPGM:IP tid	"TAP-117: Clear 'BACKUP:IP, CPYPGM:IP, INITSWD:IP, Restore:IP and SW-DWNLD:IP'" (13-50)
DCM Failure	"TAP-212: Clear 'DCM Failure' and/or Isolate Defective DCM Connections" (13-177)
DCM Port Loss Out of Range	"TAP-235: Address 'DCM Port Loss Out of Range'" (13-244)
DSA Registration Error	"TAP-241: Clear 'DSA Registration Error'" (13-263)
DSA Unreachable	"TAP-195 Clear 'DSA Unreachable'" (13-157)
EI failure	"TAP-111: Clear 'Circuit Pack Failure'" (13-29)
EI removed	"TAP-112: Clear 'Circuit Pack Removed'" (13-34)
Express SUPVY DL Failure	"TAP-192: Clear 'Local SUPVY DL Failure,' 'Express SUPVY DL Failure, or 'PROVDLTYPE Mismatch'" (13-146)
Fan 1 failure	"TAP-162: Clear 'Fan ″1″ or ″2″ or Clogged Dust Filter ″1″or ″2″ Failure' " (13-105)
Fan 2 failure	"TAP-162: Clear 'Fan ″1″ or ″2″ or Clogged Dust Filter ″1″or ″2″ Failure' " (13-105)
FLASH failure	"TAP-113: Clear 'FLASH or BOS Failure'" (13-39)
'FLASH Removed'	"TAP-133: Clear 'FLASH Removed' " (13-90)
'FLASH Removal Enabled'	"TAP-114: Clear Condition When 'ABN'/NE ACTY/INFO-N LED is Lit " (13-47)
'FLASH Unrecognizable Code'	"TAP-125: Clear 'FLASH Unrecognizable Code' " (13-65)
'FLASH/SYSCTL Code Mismatch″	"TAP-126: Clear 'FLASH/SYSCTL Code Mismatch″" (13-66)

Table 13-2 Trouble Condition — TAP Cross Reference (continued)

DESCRIPTION	Proceed to:
Incoming HSBB LOL Failure	"TAP-152: Address Incoming (LOF/LOS/LOL) Signal Failure " (13-95)
Incoming HSBB LOS Failure	"TAP-152: Address Incoming (LOF/LOS/LOL) Signal Failure " (13-95)
Address 'Incoming LOS Signal Failure When OTU is Associated with ORS'	"TAP-234: Address 'Incoming LOS Signal Failure When OTU is Associated with ORS'" (13-240)
Incoming OCH 10G LOS Failure	"TAP-152: Address Incoming (LOF/LOS/LOL) Signal Failure " (13-95)
Incoming OCH 10G LOF Failure	"TAP-152: Address Incoming (LOF/LOS/LOL) Signal Failure " (13-95)
Incoming OC-48 LOF failure	"TAP-152: Address Incoming (LOF/LOS/LOL) Signal Failure " (13-95)
Incoming OC-48 LOS failure	"TAP-152: Address Incoming (LOF/LOS/LOL) Signal Failure " (13-95)
Incoming OC-192 LOF failure	"TAP-152: Address Incoming (LOF/LOS/LOL) Signal Failure " (13-95)
Incoming OC-192 LOS failure	"TAP-152: Address Incoming (LOF/LOS/LOL) Signal Failure " (13-95)
Incoming ORS Client LOS failure	"TAP-232: Clear 'Incoming ORS Client LOS'" (13-228)
Incoming ORS Line LOS failure	"TAP-233: Clear 'Incoming ORS Line LOS'" (13-233)
Incoming optical channel LOS	"TAP-110: Address Incoming Signal Failure" (13-23)
Incoming optical line LOS	"TAP-110: Address Incoming Signal Failure" (13-23)
Incoming STM-16 LOF failure	"TAP-152: Address Incoming (LOF/LOS/LOL) Signal Failure " (13-95)
Incoming STM-16 LOS failure	"TAP-152: Address Incoming (LOF/LOS/LOL) Signal Failure " (13-95)
Incoming STM-64 LOF failure	"TAP-152: Address Incoming (LOF/LOS/LOL) Signal Failure " (13-95)
Incoming STM-64 LOS failure	"TAP-152: Address Incoming (LOF/LOS/LOL) Signal Failure " (13-95)

Table 13-2 Trouble Condition — TAP Cross Reference (continued)

DESCRIPTION	Proceed to:
Incoming SUPVY channel LOF	"TAP-110: Address Incoming Signal Failure" (13-23)
Incoming SUPVY channel LOS	"TAP-110: Address Incoming Signal Failure" (13-23)
Inhibit Alarms-Office Alarms	"TAP-114: Clear Condition When 'ABN'/NE ACTY/INFO-N LED is Lit " (13-47)
INITSWD:IP	"TAP-117: Clear 'BACKUP:IP, CPYPGM:IP, INITSWD:IP, Restore:IP and SW-DWNLD:IP'" (13-50)
Insufficient span loss (<10 dB)	"TAP-174: Clear 'Insufficient Span Loss (<10 dB)' " (13-113)
Invalid Primary DSA Address	"TAP-193: Clear 'Invalid Primary DSA Address' " (13-150)
J0 Mismatch	"TAP-156: Clear 'J0 Mismatch'" (13-101)
Local SUPVY DL Failure	"TAP-192: Clear 'Local SUPVY DL Failure,' 'Express SUPVY DL Failure, or 'PROVDLTYPE Mismatch'" (13-146)
No CP Expected in Slot	"TAP-121: Clear 'No CP Expected in Slot'" (13-58)
OA failure	"TAP-111: Clear 'Circuit Pack Failure'" (13-29)
OA removed	"TAP-112: Clear 'Circuit Pack Removed'" (13-34)
OCh Payload Label Mismatch	"TAP-236: Clear 'OCh Payload Label Mismatch'" (13-250)
Optical Channel Transmit Failure	"TAP-210: Clear 'Optical Channel Transmit Failure' " (13-168)
ODU failure	"TAP-111: Clear 'Circuit Pack Failure'" (13-29)
ODU removed	"TAP-112: Clear 'Circuit Pack Removed'" (13-34)
ODU/OMU warmup in progress	"TAP-144: Clear 'OMU/ODU warm-up in progress'" (13-94)
OH Bus Failure	"TAP-184: Clear 'Bay Bus Failure, BC Bus Failure, OH Bus Failure' " (13-128)
OMON Failure	"TAP-111: Clear 'Circuit Pack Failure'" (13-29)

Table 13-2 Trouble Condition — TAP Cross Reference (continued)

DESCRIPTION	Proceed to:
OMON LOS	"TAP-190 Clear ″OMON LOS″ " (13-141)
OMS (OA) LOS	"TAP-186: Clear 'OMS (OA) LOS'" (13-133)
OMS (ODU) LOS	"TAP-188: Clear 'OMS (ODU) LOS'" (13-137)
OMU Failure	"TAP-111: Clear 'Circuit Pack Failure'" (13-29)
OMU Removed	"TAP-112: Clear 'Circuit Pack Removed'" (13-34)
ORS Inhibit Switch	"TAP-114: Clear Condition When 'ABN'/NE ACTY/INFO-N LED is Lit " (13-47)
ORS Failure	"TAP-111: Clear 'Circuit Pack Failure'" (13-29)
ORS Forced Switch	"TAP-114: Clear Condition When 'ABN'/NE ACTY/INFO-N LED is Lit " (13-47)
ORS Manual Switch	"TAP-114: Clear Condition When 'ABN'/NE ACTY/INFO-N LED is Lit " (13-47)
ORS Removed	"TAP-112: Clear 'Circuit Pack Removed'" (13-34)
Optical Channel Transmit Failure	"TAP-210: Clear 'Optical Channel Transmit Failure' " (13-168)
OTU Failure	"TAP-111: Clear 'Circuit Pack Failure'" (13-29)
OTU Removed	"TAP-112: Clear 'Circuit Pack Removed'" (13-34)
Outdated Boot Flash	"TAP-240: Clear 'Outdated Boot Flash'" (13-259)
'OW1TYPE, OW2TYPE, or OW3TYPE'	"TAP-182: Clear 'OW1TYPE, OW2TYPE, or OW3TYPE'" (13-127)
'PROVDLTYPE Mismatch'	"TAP-192: Clear 'Local SUPVY DL Failure,' 'Express SUPVY DL Failure, or 'PROVDLTYPE Mismatch'" (13-146)
RESTORE:IP	"TAP-117: Clear 'BACKUP:IP, CPYPGM:IP, INITSWD:IP, Restore:IP and SW-DWNLD:IP'" (13-50)
RM Unreachalbe	"TAP-194: Clear 'RM Unreachable' " (13-152)
SW-DWNLD:IP	"TAP-117: Clear 'BACKUP:IP, CPYPGM:IP, INITSWD:IP, Restore:IP and SW-DWNLD:IP'" (13-50)

Table 13-2 Trouble Condition — TAP Cross Reference (continued)

DESCRIPTION	Proceed to:
Power 'A' for Fan '1' Failure	"TAP-160: Clear 'Power ″A or B″ for ″Fan 1 or 2″ Failures'; or 'Power ″A and B″ for ″Fan 1 or 2″ Failures'" (13-104)
Power 'A' for Fan '2' Failure	"TAP-160: Clear 'Power ″A or B″ for ″Fan 1 or 2″ Failures'; or 'Power ″A and B″ for ″Fan 1 or 2″ Failures'" (13-104)
Power 'B' for Fan '1' Failure	"TAP-160: Clear 'Power ″A or B″ for ″Fan 1 or 2″ Failures'; or 'Power ″A and B″ for ″Fan 1 or 2″ Failures'" (13-104)
Power 'B' for Fan '2' Failure	"TAP-160: Clear 'Power ″A or B″ for ″Fan 1 or 2″ Failures'; or 'Power ″A and B″ for ″Fan 1 or 2″ Failures'" (13-104)
Power 'A' and B' for Fan '1' Failure	"TAP-160: Clear 'Power ″A or B″ for ″Fan 1 or 2″ Failures'; or 'Power ″A and B″ for ″Fan 1 or 2″ Failures'" (13-104)
Power 'A' and B' for Fan '1' Failure	"TAP-160: Clear 'Power ″A or B″ for ″Fan 1 or 2″ Failures'; or 'Power ″A and B″ for ″Fan 1 or 2″ Failures'" (13-104)
Reset in progress	"TAP-124: Address 'Reset in Progress'" (13-63)
SUPVY add input LOS	"TAP-178: Clear SUPVY Add Input LOS " (13-116)
SUPVY drop input LOS	"TAP-181: Clear 'SUPVY Drop Output LOS'" (13-124)
SUPVY failure	"TAP-111: Clear 'Circuit Pack Failure'" (13-29)
SUPVY removed	"TAP-112: Clear 'Circuit Pack Removed'" (13-34)
TCA Digital Alarm OTU OC-48 or OC-192, CVS, ESS, SESS or SEFESS (15 min/1 day)	"TAP-237: Clear 'TCA Digital Alarm OTU OC48 or 192 CVS, ESS, SESS, or SEFESS (15 min/1 day)'" (13-252)
TCA Digital Alarm OTU OC-192 FEC-EC, FEC-UBC (15 min/1 day)	"TAP-238: Clear 'TCA Digital Alarm OTU OC192 FEC-EC, FEC-UBC (15 min/1 day)'" (13-256)
TCA Optics: OLINE (TOPR-OL)	"TAP 213: Clear TCA Optics 'OLINE (TOPR-OL)'" (13-183)
TCA Optics: OLINE (TOPT-OL)	"TAP 214: Clear TCA Optics 'OLINE (TOPT-OL)'" (13-186)

Table 13-2 Trouble Condition — TAP Cross Reference (continued)

DESCRIPTION	Proceed to:
TCA Optics: OCHAN (SPR-C)	"TAP-215: Clear 'TCA Optics OCHAN (SPR-C)'" (13-188)
TCA Optics: OCHAN (SPT-C)	"TAP-216: Clear 'TCA Optics: OCHAN (SPT-C)'" (13-193)
TCA Optics: OLINE (PLE-RPx) {x=1-6}	"TAP-217: Clear 'TCA Optics: OLINE (PLE-RPx) {x=1-6}'" (13-195)
TCA Optics: OLINE (PLE-TPx) {x=1-6}	"TAP-218: Clear 'TCA Optics: OLINE (PLE-TPx) {x=1-6}'" (13-198)
TCA Optics: OTU OC-48/STM-16 (OPR)	"TAP-219: Clear 'TCA Optics: OTU OC-48/STM-16 (OPR)'" (13-201)
TCA Optics: OTU OC-48/STM-16 (OPT)	"TAP-220: Clear 'TCA Optics: OTU OC-48/STM-16 (OPT)'" (13-204)
TCA Optics: OTU OC-48/STM-16 (LBC)	"TAP-221: Clear 'TCA Optics: OTU OC-48/STM-16 (LBC)'" (13-206)
TCA Optics: OTU OC-198/STM-64 (OPR)	"TAP-222: Clear 'TCA Optics: OTU OC-192/STM-64 (OPR)'" (13-207)
TCA Optics: OTU OC-198/STM-64 (OPT)	"TAP-223: Clear 'TCA Optics: OTU OC-192/STM-64 (OPT)'" (13-210)
TCA Optics: OTU OC-198/STM-64 (LBC)	"TAP-224: Clear 'TCA Optics: OTU OC-192/STM-64 (LBC)'" (13-212)
TCA Optics: OTU HSBB (OPR)	"TAP-225: Clear 'TCA Optics: OTU HSBB (OPR)'" (13-214)
TCA Optics: OTU HSBB (OPT)	"TAP-226: Clear 'TCA Optics: OTU HSBB (OPT)'" (13-218)
TCA Optics: OTU HSBB (LBC)	"TAP-227: Clear 'TCA Optics: OTU HSBB (LBC)'" (13-220)
TCA Optics: SUPVY (SPR-SU)	"TAP-230: Clear 'TCA Optics: SUPVY (SPR-SU)'" (13-222)
TCA Optics: OTU SUPVY (SPT-SU)	"TAP-231: Clear 'TCA Optics: SUPVY (SPT-SU)'" (13-225)
Test Alarm in Progress	"TAP-114: Clear Condition When 'ABN'/NE ACTY/INFO-N LED is Lit " (13-47)
Test LED in Progress	"TAP-177: Test LED In-Progress " (13-115)
Topology Construction in Progress	"TAP-132: Clear 'Topology Construction In Progress' " (13-89)

Table 13-2 Trouble Condition — TAP Cross Reference (continued)

DESCRIPTION	Proceed to:
Topology Construction Incomplete	"TAP-179: Clear 'Topology Construction Incomplete' " (13-120)
Unexpected Channel	"TAP-207: Clear 'Unexpected Channel'" (13-167)
Unexpected CP Type	"TAP-127: Clear 'Unexpected CP Type'" (13-70)
WAD Add LOS	"TAP-202: Clear 'WAD Add LOS'" (13-163)
WAD Drop Channel LOS	"TAP-180: Clear `WAD Drop Channel LOS' " (13-122)
WAD Incoming Optical Line LOS	"TAP-110: Address Incoming Signal Failure" (13-23)
WAD Failure	"TAP-111: Clear 'Circuit Pack Failure'" (13-29)
WAD Removed	"TAP-112: Clear 'Circuit Pack Removed'" (13-34)
WaveWrapper Path Trace Mismatch	"TAP-197: Clear 'WaveWrapper Path Trace Mismatch'" (13-160)
MUX OTU Loss of Multiframe Indicator	"TAP-242: Clear 'MUX OTU LMI'" (13-264)

□

TAP-104: Clear Trouble Report

Overview

This procedure is used to clear a Trouble Report that was received from a remote location. The remote location is receiving a bad signal or other condition from this network element.

Procedure

1 Is the CR/PROMPT, MJ/DEFERRED or MN LED lighted on the EI circuit pack (User Panel)?

IF...	THEN...
YES	Continue with Step 4.
NO	Continue with Step 2.

2 Test the LEDs. For details, see ″DLP-502: Test LEDs on Circuit Packs″ (14-6).

3 Did all the LEDs light?

IF...	THEN...
YES	Then continue with Step 4.
NO	Then go to ″TAP-108: Address Missing or Incorrect Response″ (13-20)

4 At the CIT, click on the **FAULT-NE Condition List** and obtain a report.

5 Are any alarm conditions indicated on the report?

IF...	THEN...
YES	Proceed to ″TAP-102: Clear CR/PROMPT, MJ/DEFERRED, MN LED, or TCA″ (13-5)
NO	Then continue with Step 6.

6 Check with the Operations Support Center to determine if both the C-Band and L-Band optical channels/lines have failed. Multiple failed C-Band and L-Band optical channels/lines can be caused by a failed CLSC (C-Band, L-Band Separator Combiner) apparatus unit or incoming fiber break. The C-Band and L-Band systems could be in the same building or another building. Therefore, request the assistance of the Operations Support Center in determining if both C- and L-Band systems are having optical channels/lines failures.

IF...	THEN...
YES	Treat the failure as an outside plant fiber cut and work with the Operations Center to fix the outside plant fiber cut.
NO	Either the C-Band or L-Band optical line failed, continue with Step 7.

CAUTION

SERVICE AFFECTING - Step 7 could result in service interruption.

7 Make a visual inspection of ALL outgoing cable(s) and connection(s) and correct any problem(s) found. For details, refer to ″DLP-517: Inspect Optical Fiber(s)″ (14-42).

8 Was a problem(s) found with the outgoing cable(s) or connection(s)?

IF...	THEN...
YES	Continue with Step 21.
NO	Continue with Step 9.

CAUTION

SERVICE AFFECTING - Failure to follow instructions in Step 9 could result in service interruption.

9 Notify the person responsible for the optical line associated with the service or protection signals assigned to this OA/ODU/WAD to manually switch the service line to a protection line or ensure all protection lines assigned to this OA/ODU/WAD are not being used for service.

CAUTION

SERVICE AFFECTING - Step 10 could result in service interruption.

Important! If changing the OA does not fix the problem, change the DCM apparatus unit associated with the OA. Refer to the section Remove/Install a DCM apparatus unit (10-39) of ″DLP-514: Remove and/or Install Circuit Pack″ (14-30). If there are transmission errors on multiple channels, or LOS at the DCM-IN port of an OA, refer to ″TAP-212: Clear ’DCM Failure’ and/or Isolate Defective DCM Connections″ (13-176).

10 Replace the local transmit circuit pack as indicated from the Trouble Report. For details, refer to ″DLP-514: Remove and/or Install Circuit Pack″ (14-30).

11 Contact the office that issued the Trouble Report and determine if the trouble has cleared.

IF...	THEN...
YES	***STOP! YOU HAVE COMPLETED THIS PROCEDURE.***
NO	Continue with Step 12.

CAUTION

SERVICE AFFECTING - Step 12 could result in service interruption.

12 Remove the replacement circuit pack (installed in Step 10) and reinstall the original circuit pack. For details, refer to ″DLP-514: Remove and/or Install Circuit Pack″ (14-30).

13 Was the reported trouble an Incoming Optical Line LOS?

IF...	THEN...
YES	Continue with Step 14
NO	Continue with Step 17.

CAUTION

SERVICE AFFECTING - Step 14 could result in service interruption.

14 Replace the local transmit CLSC apparatus unit as indicated from the Trouble Report. For details, refer to ″DLP-514: Remove and/or Install Circuit Pack″ (14-30).

15 Contact the office that issued the Trouble Report and determine if the trouble has cleared?

IF...	THEN...
YES	***STOP! YOU HAVE COMPLETED THIS PROCEDURE.***
NO	Continue with Step 16.

16 Remove the replacement CLSC apparatus unit (installed in Step 14) and reinstall the original CLSC apparatus unit. For details, refer to ″DLP-514: Remove and/or Install Circuit Pack″ (14-30).

17 Return a NO TROUBLE FOUND conclusion to the report (no active local alarms or visual problems).

CAUTION

SERVICE AFFECTING - Step 18 could result in service interruption.

18 Optical fibers can be tested by using optical time domain reflectometers (OTDR) to help locate a fiber bend or cut. Refer to local operating procedures for further guidance in addressing this condition.

19 Notify the person responsible for the optical line associated with the service or protection signals assigned to this OA/ODU/WAD or CLSC apparatus unit that the Optical Line can now be returned to service.

20 ***STOP! YOU HAVE COMPLETED THIS PROCEDURE.***

21 Contact office that issued the Trouble Report and notify them that a cable problem was found and corrected.

22 ***STOP! YOU HAVE COMPLETED THIS PROCEDURE.***

END OF STEPS

TAP-107: Address Environmental Input and/or Control Output Condition

Overview

If either the Environmental Input or the Control Output condition appears in the **Fault-NE Condition List** report, it indicates that the condition is active. These conditions are provisioned by the customer (user enters the text string).

Procedure

1 Which condition are you to address?

IF...	THEN...
environmental	Continue with Step 2.
control	Continue with Step 4.

Important! The environmental condition is external to the WaveStar® OLS 1.6T system NE.

2 Consult and follow the local maintenance procedures to clear the indicated environmental condition.

3 ***STOP! YOU HAVE COMPLETED THIS PROCEDURE.***

Important! The control condition is external to the WaveStar® OLS 1.6T system NE and can be (if required) released by a manual command at the CIT (refer to "TAP-114: Clear Condition When 'ABN'/NE ACTY/INFO-N LED is Lit" (13-47).

4 Consult and follow the local maintenance procedures to clear the indicated control condition.

END OF STEPS

□

TAP-108: Address Missing or Incorrect Response

Overview You were sent here from another procedure because a WaveStar® OLS 1.6T NE responded in an unexpected manner. This unexpected response was a missing or incorrect LED indication or CIT message.

Procedure **Important!** There is no LED on the DCM apparatus unit.

1 Was the unexpected response from a LED or from the CIT?

IF...	THEN...
From a ***LED***	Continue with Step 2.
From the ***CIT***	Continue with Step 8.

2 Test the LEDs. For details, see ″DLP-502: Test LEDs on Circuit Packs″ (14-6).

3 Did the LED(s) of interest operate as indicated above?

IF...	THEN...
YES	Continue with Step 4.
NO	Continue with Step 12.

4 Is the same unexpected response still observed?

IF...	THEN...
NO	***STOP! YOU HAVE COMPLETED THIS PROCEDURE***.
YES	Continue with Step 5.

5 Return to the procedure that sent you here. If the same unexpected response is observed again, contact the appropriate maintenance support organization for further technical assistance.

6 ***STOP! YOU HAVE COMPLETED THIS PROCEDURE.***

7 Was the message “Reset bin fails” returned?

IF...	THEN...
YES	An Invalid Access Identifier was entered. Enter a command that is compatible with the addressed AID.
NO	Continue with Step 8.

Important! Prior to rebooting, the customer specific values should be retrieved and printed. After the reboot, re-provision the non-defaulted values.

8 At the CIT, select **FAULT-Reset** and in the Reset Dialog box select **System** and click the **OK** button to reset the network element, or press the **Restart** button on the EI circuit pack (User Panel).

WARNING

Automatic Power Shutdown (APSD) of the OA output will not be available during the system reset caused by the following maintenance action.

Important! The CIT will disconnect from the network element when the system is being reset.

9 Wait for the reset to complete, depending on the system size reset time varies between 30 to 60 minutes. During this time the lighting of various LEDs will be observed.

10 Return to the procedure that sent you here. If the same unexpected response is observed again, contact the appropriate maintenance support organization for further technical assistance.

11 ***STOP! YOU HAVE COMPLETED THIS PROCEDURE***.

Important! When clearing a DCM Failure alarm condition, the DCM apparatus unit has no LED. If the cause of the DCM Failure alarm condition is a bad DCM fiber jumper, bad LBO, or failed DCM apparatus unit for the DCM IN/OUT port of an OA, then the fault LED of the OA associated with the DCM failure will flash. The NE Alarm List AID column will identify the OA and the DCM IN port. If there are transmission errors on multiple channels, or LOS at the DCM-IN port of an OA, refer to"TAP-212: Clear 'DCM Failure' and/or Isolate Defective DCM Connections" (13-176).

CAUTION

SERVICE AFFECTING - Step 12 could result in service interruption.

12 Replace the circuit pack containing the LED(s) that did not respond as indicated in Step 3. For details, refer to "DLP-514: Remove and/or Install Circuit Pack" (14-30).

13 Return to the procedure that sent you here. If the same unexpected response is observed again, contact the appropriate maintenance support organization for further technical assistance.

END OF STEPS

TAP-110: Address Incoming Signal Failure

Overview

This procedure is used when one of the following incoming signal failures is detected:

`Incoming optical channel LOS`

`Incoming SUPVY channel LOF`

`Incoming SUPVY channel LOS`

`Incoming optical line LOS`

`WAD Incoming optical line LOS`

Procedure

Important! Multiple failed optical channels could be caused by a failed DCM. If replacing an OA or receive a multiple optical channel failure; replace the DCM. If there are transmission errors on multiple channels, or LOS at the DCM-IN port of an OA, refer to ″TAP-212: Clear ’DCM Failure’ and/or Isolate Defective DCM Connections″ (13-176).

1 Refer to the **FAULT-NE Condition List** and the Description column to determine the type of incoming signal failure.

Important! If the failure shows Incoming Optical Line LOS, verify that APSD is active on that line by selecting **FAULT-NE Condition List**.

2 Remove the appropriate shelf cover. For details, refer to ″DLP-511: Install/Remove Shelf Cover″ (14-19).

3 Is the failed condition an incoming SUPVY Channel LOS?

IF...	THEN...
NO	Continue with Step 4.

IF...	THEN...
YES	Continue with Step 7 (if SUPVY). ***NOTE:*** Multiple failed C-Band and L-Band optical channels/lines can be caused by a failed CLSC apparatus unit or incoming fiber break. The C-Band and L-Band systems could be in the same building or another building.

4 Check office records, the Operations Support Center, or consult the appropriate maintenance support organization for technical assistance to determine the L-band system connected to the CLSC apparatus unit

5 Request the assistance of the Operations Support Center in determining if both C- and L-Band systems are having optical channels/lines failures.

6 Are both the C-Band and L-Band optical channels/lines have failed.

IF...	THEN...
YES	Treat the failure as a fiber cut and work with the Operations Center to fix the fiber cut.
NO	Either the C-Band or L-Band optical channel/line failed) continue with Step 7.

CAUTION

SERVICE AFFECTING - Step 7 could result in service interruption.

7 Visually inspect the incoming signal cable(s) and connection(s) and correct any problems found. For details, refer to ″DLP-517: Inspect Optical Fiber(s)″ (14-42).

8 Did the visual inspection result in correcting any problems?

IF...	THEN...
YES	Continue with Step 29.
NO	Continue with Step 9.

9 Initiate a trouble report to the next upstream Network Element and have them check for alarm conditions (SUPVY circuit pack failure or SUPVY ADD Input LOS. Are there any alarm conditions at the upstream node?

IF...	THEN...
YES	Refer the trouble report to that office. STOP! YOU HAVE COMPLETED THIS PROCEDURE.
NO	Continue with Step 10.

10 Using the AID and Description columns from the report in Step 1, identify the circuit pack (use the line identifier, for example, Line 1E) associated with this incoming failure condition.

Important! The circuit pack identified in the AID column can be located in *WaveStar® OLS 1.6T Applications Planning Guide*, (365-575-786), Bay Configurations.

11 Was an OA/ODU/WAD circuit pack associated with the incoming failure?

IF...	THEN...
NO	Continue with Step 13 (if SUPVY).
YES	Continue with Step 12.

CAUTION

SERVICE AFFECTING - Failure to follow instructions in Step 12 could result in service interruption.

12 Notify the person responsible for the optical line associated with the service or protection signals assigned to this OA/ODU/WAD to manually switch the service line to a protection line or ensure all protection lines assigned to this OA/ODU/WAD are not being used for service.

Important! If replacing a SUPVY circuit pack, or a reboot is in progress, do not pull the circuit pack until the reboot has successfully completed.

13 Replace the receive circuit pack identified in Step 10. For details, refer to ″DLP-514: Remove and/or Install Circuit Pack″ (14-30).

14 Obtain another report (refer to Step 1). Is the same incoming signal failure still listed?

IF...	THEN...
YES	Continue with Step 16.
NO	Continue with Step 15.

15 Did you replace an OA/ODU/WAD circuit pack in Step 13?

IF...	THEN...
NO	Continue with Step 29 (if SUPVY).
YES	Continue with Step 27.

16 Remove the replacement circuit pack (installed in Step 13) and reinstall the original circuit pack. For details, refer to ″DLP-514: Remove and/or Install Circuit Pack″ (14-30).

17 Identify the Line/Port (for example, Line-1E or Line-1W or 1IN or 2IN) associated with this incoming failure condition. Record the Line/Port identified in the AID column on the NE Alarm List report obtained in Step 14.

18 At the CIT, select **VIEW-Rings-Ring Map** command to obtain a report.

19 In the NODE TID column locate the TID that has the incoming signal failure.

20 Reading across the report on the line for the TID identified in Step 19 and locate in the East or West Port column the port that corresponds to the Line/Port identified in Step 17. For example if Line-1E appears as the failed line AID column in Step 17 then look for 1E in the East column of the report. If a Port was identified in Step 17 then 1IN corresponds to the ()E port and 2 IN corresponds to the () W port in the East or West Port column on the report.

21 The neighbor listed in the adjacent column to the right is the source of the incoming signal.

22 Initiate a Trouble Report to the source of the failed incoming signal indicating the type of failure. If the source of the failed incoming signal returns a Trouble Report indicating ″no trouble found,″ continue with Step 23.

23 Was the reported trouble an incoming optical line LOS?

IF...	THEN...
YES	Continue with Step 24.
NO	Continue with Step 29.

24 Replace the local CLSC apparatus unit. For details, refer to ″DLP-514: Remove and/or Install Circuit Pack″ (14-30).

25 Obtain another report (refer to Step 1). Is the same incoming signal failure still listed?

IF...	THEN...
YES	contact the appropriate maintenance support organization for further technical assistance.
NO	Continue with Step 27.

26 ***STOP! YOU HAVE COMPLETED THIS PROCEDURE.***

27 Notify the person responsible for the optical line associated with the service or protection signals assigned to this OA/ODU/WAD or CLSC apparatus unit that the Optical Line can now be returned to service.

28 Baseline the replaced OA or SUPVY circuit pack. For details, refer to ″DLP-529: Baseline Optical Parameters″ (14-74).

29 Reinstall the shelf cover. For details, refer to ″DLP-514: Remove and/or Install Circuit Pack″ (14-30).

END OF STEPS

□

TAP-111: Clear 'Circuit Pack Failure'

Overview

This procedure is used to replace a circuit pack with a lighted FAULT LED in response to one of these indicated failures:

EI failure (can only be seen from a remote CIT or Operations Center)

OA failure

ODU failure

OMON failure

OMU failure

ORS failure

OTU failure

SUPVY failure

WAD failure

CAUTION

During initial software installation and when circuit packs are inserted into a running system, there will be an automatic upgrade of the firmware on the circuit packs to the latest version. Flashing green LEDs on the circuit pack faceplates will indicate that the upgrade is occurring (typically less than 30 seconds). Please DO NOT remove the circuit pack during this upgrade because it may cause damage to the affected pack. After the pack LEDs stop flashing it is then safe to remove the packs or power down the system as needed.

Important! Refer to the WaveStar® OLS 1.6T (400G/800G) Installation Manual, Release 6.1, for information on how to fiber new 4:1 OMON circuit packs (OMON1B).

Procedure

Important! If applicable, suggest replacing the LBO if the trouble condition remains after performance power checks and replacement of the circuit pack (that has the LBO) failed to correct the problem. For details, refer to "DLP-528: LBO Applications" (14-60).

1 At the CIT, click on the **FAULT-NE Condition List** to obtain a report.

2 Using the AID column from the report (Step 1), identify the appropriate shelf associated with the `Circuit Pack Failure` alarm condition.

3 Remove the appropriate shelf cover. All connections can be accessed from the front. For details, refer to "DLP-514: Remove and/or Install Circuit Pack" (14-30).

4 Is the FAULT LED lighted on the circuit pack identified in the AID column?

IF...	THEN...
YES	Continue with Step 5.
NO	Refer to TAP-108: Address Missing or Incorrect Response.

5 Is the circuit pack to be replaced a OA/OTU/OMU/ODU/ORS/WAD circuit pack?

IF...	THEN...
YES	Then continue with Step 6.
NO	Then continue with Step 7 (if EI, OMON, or SUPVY).

CAUTION

SERVICE AFFECTING - Failure to follow instructions in Step 6 could result in service interruption.

6 Notify the person responsible for the optical line or channel associated with the service or protection signals assigned to this circuit pack; (1) to manually switch the service line or channel to a protection line, and (2) to ensure that all protection lines or channels that are assigned to

this circuit pack are not being used for service. Another option is to restore service on a different Optical Line System or route.

Important! A series number ***S1:2*** is the same series number as ***S1:4***. The 2 and 4 refer to minor changes within series 1.

WARNING

Automatic Power Shutdown (APSD) of the OA output will not be available during the system reset caused by the following maintenance action.

7 Obtain a replacement circuit pack with the same or a higher series number and install it in place of the circuit pack with the lighted FAULT LED. For details, refer to ″DLP-514: Remove and/or Install Circuit Pack″ (14-30).

Important! If replacing a SUPVY circuit pack, and a reboot is in progress do not pull the circuit pack until the reboot has successfully completed.

WARNING

Automatic Power Shutdown (APSD) of the OA output will not be available during the system reset caused by the following maintenance action.

8 Wait for the time indicated in Table 13-3, ″Waiting Times″ (13-38). These are the worst-case times; the alarm may clear sooner.

Important! Replacing the EI circuit pack in either an End Terminal, or Repeater will cause the system controller to reboot. Reseating the EI circuit pack in the Repeater will also cause the System Controller to reboot. After replacing an EI circuit pack, the SYStem IDentifier (SYSID) in the Network Service Access Point (NSAP) address will change. The local craft technician should retrieve the new SYSID from the network element (for example, Repeater) by clicking on **CONFIGURATION- Installation Provisioning** command to obtain the Installation Provisioning Wizard. Then click the next button until the

NSAP Address Information window appears and inform the SNMS technician of the new SYSID indicated in that window. After replacement or reseating of the EI circuit pack, verify that the system clock is correct. If necessary, reset the system clock.

9 Is the FAULT LED lighted on the replacement circuit pack?

IF...	THEN...
YES	Go to TAP-108: Address Missing or Incorrect Response (13-24).
NO	Continue with Step 10.

10 Is the circuit pack just replaced an OA/OTU/OMU/ODU/ORS/WAD circuit pack?

IF...	THEN...
YES	Continue with Step 11.
NO	Continue with Step 12 (for EI, OMON, or SUPVY).

11 Notify the person that is responsible for all affected service protection signals assigned to this OA/OTU/OMU/ODU/ORS/WAD that this Optical Line can now be returned to service.

12 Reinstall the shelf cover. For details, refer to "DLP-511: Install/Remove Shelf Cover" (14-19).

13 Did you replace an OA, OMON or SUPVY pack?

IF...	THEN...
YES	Baseline the replaced circuit pack. For details, refer to DLP-529: Baseline Optical Parameters (10-76).
NO	Continue with Step 14.

14 Is the CR/PROMPT, MJ/DEFERRED or MN LED lighted on the EI circuit pack/User Panel?

IF...	THEN...
YES	Refer to "TAP-102: Clear CR/PROMPT, MJ/DEFERRED, MN LED, or TCA" (13-5).
NO	***STOP! YOU HAVE COMPLETED THIS PROCEDURE.***

END OF STEPS

Table 13-3 Waiting Times

CP Inserted	Waiting Time
EI	15-60 minutes
OA	5 minutes
ODU	15 minutes
OMON	3 minutes
OMU	15 minutes
ORS	3 minutes
OTU	10 minutes
SUPVY	10 minutes
WAD	1 minute

TAP-112: Clear 'Circuit Pack Removed'

Overview

Use this procedure to clear one of the conditions below by (1) installing the missing circuit pack or (2) updating the network element data base to reflect the current equipage:

EI removed (can only be seen from a remote CIT or operations center)

OA removed

ODU removed

OMU removed

OMON removed

ORS removed

OTU removed

BOS removed

SUPVY removed

WAD removed

Procedure

1 At the CIT, click on the **FAULT-NE Condition List** to obtain a report.

2 Using the AID column from the report (Step 1), identify the appropriate shelf associated with the removed circuit pack.

3 Remove the appropriate shelf cover. All connections can be accessed from the front. For details, refer to "DLP-511: Install/Remove Shelf Cover" (14-19).

4 Is the indicated slot empty or circuit pack unseated?

IF...	THEN...
YES	Continue with Step 5.
NO	Go to "TAP-108: Address Missing or Incorrect Response" (13-20).

5 Do the office records show that the slot should contain a circuit pack?

IF...	THEN...
YES	Continue with Step 10.
NO	Continue with Step 6.

6 At the CIT, select **CONFIGURATION-Circuit Connection** and use the Circuit Connection Wizard to remove all associations related to the removed circuit pack. For help, refer to ″Provisioning Guidelines″ (4-8).

7 At the CIT, click on the **FAULT-NE Condition List** to obtain a report.

8 Is the alarm condition cleared?

IF...	THEN...
YES	Continue with Step 17.
NO	Go to ″TAP-108: Address Missing or Incorrect Response″ (13-20).

9 ***STOP! YOU HAVE COMPLETED THIS PROCEDURE***.

10 Is the circuit pack to be replaced or reseated an OA/OTU/ORS/OMU/ODU/WAD circuit pack?

IF...	THEN...
YES	Continue with Step 11.
NO	Continue with Step 12 (if EI, OMON, BOS, or SUPVY).

CAUTION

SERVICE AFFECTING - Failure to follow instructions in Step 11 could result in service interruption.

11 Notify the person responsible for the optical line or channel associated with the service or protection signals assigned to this circuit pack; (1) to manually switch the service line or channel to a protection line, and (2) to ensure that all protection lines or channels that are assigned to this circuit pack are not being used for service. Another option is to restore service on a different Optical Line System or route.

Important! A series number ***S1:2*** is the same series number as ***S1:4***. The 2 and 4 refer to minor changes within series 1.

Important! If replacing a SUPVY circuit pack, and a reboot is in progress do not pull the circuit pack until the reboot has successfully completed.

12 Reseat the circuit pack or obtain a replacement circuit pack with the same or a higher series number and install it in the empty slot. For details, refer to "DLP-514: Remove and/or Install Circuit Pack" (14-30).

WARNING

Automatic Power Shutdown (APSD) of the OA output will not be available during the system reset caused by the following maintenance action.

13 Wait for the time indicated in Table 13-4, "Waiting Times" (13-43). These times are worst case times; alarm may clear sooner.

Important! Replacing the EI circuit pack in either an End Terminal, or Repeater will cause the system controller to reboot. Reseating the EI circuit pack in the Repeater will also cause the System Controller to reboot. After replacing an EI circuit pack, the SYStem IDentifier

(SYSID) in the Network Service Access Point (NSAP) address will change; the local craft technician should retrieve the new SYSID from the network element, for example, Repeater, by clicking on Configuration and Installation Provisioning, and go to the second NSAP Address Information window using the CIT, and inform the SNMS technicians. After replacement or reseating of the EI circuit pack, verify that the system clock is correct. If necessary, reset the system clock.

14 Is the FAULT LED lighted on the replacement circuit pack?

IF...	THEN...
YES	Go to ″TAP-102: Clear CR/PROMPT, MJ/DEFERRED, MN LED, or TCA″ (13-5).
NO	Continue with Step 15.

15 Is the circuit pack just replaced an OA/OTU/ORS/OMU/ODU/WAD circuit pack?

IF...	THEN...
YES	Continue with Step 16.
NO	Continue with Step 17 (for EI, OMON, BOS, or SUPVY).

16 Notify the person that is responsible for all affected service or protection signals assigned to this OA that this optical line or channel can now be returned to service.

17 Reinstall the shelf cover. For details, refer to ″DLP-511: Install/Remove Shelf Cover″ (14-19).

18 Is the CR/PROMPT, MJ/DEFERRED or MN LED lighted on the EI circuit pack/User Panel?

IF...	THEN...
YES	Refer to ″TAP-102: Clear CR/PROMPT, MJ/DEFERRED, MN LED, or TCA″ (13-5).
NO	***STOP! YOU HAVE COMPLETED THIS PROCEDURE.***

END OF STEPS

Table 13-4 Waiting Times

CP Inserted	Waiting Time (minutes)
BOS	15-60
EI	15-60
OA	5
ODU	15
OMON	3
OMU	15
ORS	3
OTU	10
SUPVY	10
WAD	1

TAP-113: Clear 'FLASH or BOS Failure'

Overview This procedure explains how to clear FLASH or BOS failures.

Procedure **Important!** The installation of a replacement FLASH Memory Module in the SYSMEM slot of the BOS-SYSCTL circuit pack may generate certain unexpected alarm conditions until the new software loads. Ignore these indications until the software loads.

1 At the CIT, click on the **FAULT-NE Condition List** to obtain a report.

2 Using the AID column from the report in Step 1, identify the appropriate shelf associated with the FLASH or BOS failures.

3 Remove the appropriate shelf cover. For details, go to "DLP-511: Install/Remove Shelf Cover" (14-19).

4 What type of fail condition is reported?

IF...	THEN...
FLASH failure,	Go to FLASH FAILURE (13-45).
BOS-SYSCTL failure	Go to BOS-SYSCTL FAILURE (13-48).
BOS-BAYCTL or BOS-OHCTL failure	Go to BOS-BAYCTL or BOS-OHCTL FAILURE (13-50).

END OF STEPS

FLASH FAILURE

1 Is a replacement FLASH Memory Module with the same software release currently active on the network element available?

IF...	THEN...
YES	Continue with Step 2.
NO	Consult the appropriate maintenance support organization for technical assistance before proceeding with other trouble clearing procedures.

2 At the CIT, click on **CONFIGURATION-Provision**.

3 Click on the bay where the BOS () -SYSCTL (CP10) is located.

4 Click on the shelf where the BOS () -SYSCTL (CP10) is located.

5 Click on the BOS () -SYSCTL (CP10) circuit pack.

6 Select the Provision button.

7 Select Enable for the FMM Removal.

8 Click on the Apply button.

9 When the FAULT LED flashes, push the eject button above the SYSMEM slot of the SYSCTL circuit pack to eject the FLASH Memory Module from the SYSCTL circuit pack.

WARNING

Automatic Power Shutdown (APSD) of the OA output will not be available during the system reset caused by the following maintenance action.

10 Install the replacement FLASH Memory Module obtained in Step 1 into the BOS-SYSCTL SYSMEM slot. For details, go to ″DLP-514: Remove and/or Install Circuit Pack″ (14-30).

11 Wait approximately 5 - 15 min, depending on system size.

12 Is the red LED on the BOS () -SYSCTL (CP10) circuit pack blinking?

IF...	THEN...
YES	Continue with Step 13.
NO	Consult the appropriate maintenance support organization for technical assistance before proceeding with other Trouble Clearing procedures.

13 At the CIT, click on the **FAULT-NE Condition List** to obtain another report.

14 Is the same alarm condition still listed under the DESCRIPTION column of the report?

IF...	THEN...
YES	Consult the appropriate maintenance support organization for technical assistance before proceeding with other trouble clearing procedures.
NO	Continue with Step 15.

15 At the CIT, click on **CONFIGURATION-Provision**.

16 Click on the bay where the BOS () -SYSCTL (CP10) is located.

17 Click on the shelf where the BOS () -SYSCTL (CP10) is located.

18 Click on the BOS () -SYSCTL (CP10) circuit pack.

19 Click on the Provision button.

20 Select Disable for the FMM removal.

21 Click on the Apply button.

22 Reinstall the shelf cover. For details, go to "DLP-511: Install/Remove Shelf Cover" (14-19).

23 Is the CR/PROMPT, MJ/DEFERRED, or MN LED lighted on the EI circuit pack (User Panel)?

IF...	THEN...
YES	Proceed to "TAP-102: Clear CR/PROMPT, MJ/DEFERRED, MN LED, or TCA" (13-5)
NO	***STOP! YOU HAVE COMPLETED THIS PROCEDURE.***

END OF STEPS

BOS-SYSCTL FAILURE

CAUTION

The provisioning data for the Network Element is on the FLASH Memory Module that will be removed from the SYSCTL, therefore ensure that the same FLASH Memory Module removed from the SYSCTL is inserted in the new SYSCTL.

CAUTION

SERVICE AFFECTING - If this procedure is not performed properly, you can affect service.

1 At the CIT, click on **CONFIGURATION-Provision**.

2 Click on the bay where the BOS () -SYSCTL (CP10) is located.

3 Click on the shelf where the BOS () -SYSCTL (CP10) is located.

4 Click on the BOS () -SYSCTL (CP10) circuit pack.

5 Click on the Provision button.

6 Select Enable for the FMM removal.

7 Click on the Apply button.

8 When the FAULT LED flashes, push the eject button above the SYSMEM slot of the SYSCTL circuit pack to eject the FLASH Memory Module from the SYSCTL circuit pack.

Important! A series number ***S1:2*** is the same series number as ***S1:4***. The 2 and 4 refer to minor changes within series 1.

9 Obtain a replacement circuit pack with the same or higher series number and, ***reinstall the FLASH Memory Module*** removed in Step 8, into the replacement SYSCTL circuit pack.

WARNING

Automatic Power Shutdown (APSD) of the OA output will not be available during the system reset caused by the following maintenance action.

10 Install the replacement circuit pack (from Step 9) in place of the circuit pack with the lighted FAULT LED. For details, go to "DLP-514: Remove and/or Install Circuit Pack" (14-30).

11 Wait approximately 15-60 min, depending on system size, or until the MJ LED is off on the EI circuit pack (User Panel), whichever comes first.

12 At the CIT, click the **FAULT-NE Condition List** to obtain a report.

13 Is the same alarm condition still listed under the DESCRIPTION column?

IF...	THEN...
YES	Consult the appropriate maintenance support organization for technical assistance before with other trouble clearing procedures.
NO	Reinstall the shelf cover. For details, go to "DLP-511: Install/Remove Shelf Cover" (14-19)

14 Is the CR/PROMPT, MJ/DEFERRED, or MN LED lighted on the EI circuit pack (User Panel)?

IF...	THEN...
YES	Proceed to "TAP-102: Clear CR/PROMPT, MJ/DEFERRED, MN LED, or TCA" (13-5)
NO	***STOP! YOU HAVE COMPLETED THIS PROCEDURE.***

END OF STEPS

BOS-BAYCTL or BOS-OHCTL FAILURE

Important! A series number ***S1:2*** is the same series number as ***S1:4***. The 2 and 4 refer to minor changes within series 1.

CAUTION

Do not insert a FLASH Memory Module (FMM) into the SYSMEM slot of a BOS-BAYCTL or BOS-OHCTL circuit pack. This will cause loss of service.

1 Obtain a replacement circuit pack with the same or higher series number and install it in place of the circuit pack with the lighted FAULT LED. For details, refer to "DLP-514: Remove and/or Install Circuit Pack" (14-30).

WARNING

Automatic Power Shutdown (APSD) of the OA output will not be available during the system reset caused by the following maintenance action.

2 At the CIT, select **FAULT-Reset** and in the Reset Dialog box select **System** and click the **OK** button to reset the network element or press the Restart button on the EI circuit pack (User Panel).

3 Wait 15-60 min, depending on system size, or until the MJ LED is off on the EI circuit pack (User Panel), whichever comes first.

4 At the CIT, click on the **FAULT-NE Condition List** to obtain a report.

5 Is the same alarm condition still listed under the DESCRIPTION column?

IF...	THEN...
YES	Consult the appropriate maintenance support organization for technical assistance before with other trouble clearing procedures.
NO	Continue with Step 6.

6 Reinstall the shelf cover. For details, go to "DLP-511: Install/Remove Shelf Cover" (14-19).

7 Is the CR/PROMPT, MJ/DEFERRED, or MN LED lighted on the EI circuit pack (User Panel)?

IF...	THEN...
YES	Proceed to "TAP-102: Clear CR/PROMPT, MJ/DEFERRED, MN LED, or TCA" (13-5)
NO	***STOP! YOU HAVE COMPLETED THIS PROCEDURE.***

END OF STEPS

□

TAP-114: Clear Condition When ’ABN’/NE ACTY/INFO-N LED is Lit

Overview

This procedure is used to clear one or more of the following conditions:

- `(control point string)`
- `disable alarms-office alarms`
- `Flash removal enabled`
- `test alarm in progress`
- `ORS Forced Switch`
- `ORS Inhibit Switch`
- `ORS Manual Switch`

Procedure

Important! The indicated condition was initiated by a user command. You must determine, by consulting with the appropriate maintenance personnel, whether the need for the user-initiated condition still exists before proceeding.

1 Does the need for the user initiated condition still exist?

IF...	THEN...
YES	Continue with Step 2.
NO	Continue with Step 3.

2 Referring to the **FAULT-NE Condition List** report on the CIT screen, are any other conditions indicated?

IF...	THEN...
YES	Go to ″TAP-102: Clear CR/PROMPT, MJ/DEFERRED, MN LED, or TCA″ (13-5) to clear the remaining condition(s), ignoring the condition that sent you here.
NO	***STOP! YOU HAVE COMPLETED THIS PROCEDURE.***

3 Use the CIT to clear the indicated condition by performing the function listed in Table 13-5, ″Determine Command for Condition″ (13-48).

END OF STEPS

Table 13-5 Determine Command for Condition

Condition to be Cleared	Perform Function
`disable alarms-office alarms`	Configuration-Alarms-Alarm Configuration Select the appropriate data and click the **OK** button
`ORS inhibit switch`	1. At the CIT, select **FAULT-Protection Switch-Channel Path**. 2. Select channel path with inhibit switch condition. 3. Click the **Clear** button, then **OK**.
`ORS forced switch`	1. At the CIT, select **FAULT-Protection Switch-Channel Path**. 2. Select channel path with forced switch conditon. 3. Click the **Clear** button, then **OK**.
`ORS manual switch`	1. At the CIT, select **FAULT-Protection Switch-Channel Path**. 2. Select channel path with manual switch conditon. 3. Click the **Clear** button, then **OK**.

Table 13-5 Determine Command for Condition (continued)

Condition to be Cleared	Perform Function
`(control point string)`	**FAULT-Operate Output Miscellaneous Discretes** 1. At the CIT, select **Fault-Operate Output Miscellaneous Discretes** 2. In the Operate Output Miscellaneous dialog box, click on the Miscellaneous Discrete control point indicated on the Condition Report description column of the TAP that sent you here. 3. Check the office record to verify if the control point should be ***ON*** or ***OFF***. 4. Click the **OFF** or **ON** button to change the current setting. 5. Click **YES** when the system prompts you to confirm the change. 6. Observe that the `Output Miscellaneous Discretes` changed to the appropriate condition.
`Flash removal enabled`	Select **CONFIGURATION-Provision**, then click on **Bay, Shelf, SYSCTL (CP10) circuit pack**. 1. Click on Provision Select the appropriate data and click the **Apply** button 2. Click **YES** in the confirmation box. Enable and Disable FMM removal, allows for the replacement of the Flash Memory Module (FMM). This function allows the user to remove the FMM from the BOS() Circuit Pack serving the SYSCTL by pressing the FMM eject button located on the BOS() SYSCTL circuit pack. The network element reports a standing condition and flash the FAULT LED on the BOS() SYSCTL when the user function executes.
`test alarm in progress`	Wait for the test to complete

□

TAP-117: Clear ’BACKUP:IP, CPYPGM:IP, INITSWD:IP, Restore:IP and SW-DWNLD:IP’

Overview

These alarm conditions are the result of software procedures selected by the user for backup, copy program, download, initiate and restore of software. A brief description of each of the alarm conditions is listed below:

Important! This is not a clearing activity; wait for the condition to finish.

Backup:IP

Database backup is in progress. This function causes a transfer of the current working values in the database to the backup Flash Memory Module (FMM) database and to a specified location in a remote system.

Using the *WaveStar® Optical Line System (OLS) 1.6T Software Release Description*, (Comcode 109154401), the user will setup the destination system with the appropriate file access permissions to write data to the destination pathname location in the responder virtual file store. The pathname is assumed to point to a directory on the responder. The Backup function indicates an error if the users setup destinations are not valid.

Disregard any alarm resync message during the database backup process, as the system is only reporting a transient condition which should clear upon completion of the backup process. Note that it may take up to 30 minutes to complete this task based on delays in the customer network.

Cpypgm:IP (tid)

Software is being copied from this WaveStar® OLS 1.6T NE to the NE whose target identification (TID) appears in the message.

The software download is performed in the background. Once the background download is initiated, there is no mechanism to cancel the operation. To confirm that this operation completed, check the history log for the target network element.

Initswd:IP (reset)

Initiate Software (INITSWD:IP) is part of a software reset in progress. This involves downloading software from the FLASH to the BOS-SYSCTL, OHCTL, BAYCTL and board controllers on all circuit

packs. During this time, the miscellaneous discrete control points are deactivated.

Restore:IP

Database restoration is in progress. The Network Element (NE) shall complete execution of the Restore function within two minutes of receipt, with an objective execution time of one minute. Note that it may take up to 30 minutes to complete this task based on delays in the customer network.

The restoration command shall fail for any of the following reasons:

1. If the destination pathname on the responder is not a directory.
2. If after retrieving the directory listing(s) from the Operating System (OS), the Network Element (NE) determines the number and types of files are not of the correct format for the database.
3. If the data is corrupted during transfer, found to be corrupted after transfer, invalid in any way or does not match the format used by the currently running software generic. In all of these failure cases the Network Element (FMM) copy of the database with the current contents of the backup Flash Memory Module (FMM) database.

SW-Dwnld:IP

The software that is being downloaded is in progress. It takes about thirty minutes to complete the download. The status (IP, pass, fail) can be found in the retrieve log report.

Procedure

1 If an error message appears on the screen during the backup, copy program, download, initiate and restore of the software procedure, reinitiate the desired procedure per the *WaveStar Optical Line System (OLS) 1.6T Software Release Description*, (Comcode 109154401).

Important! This is not a clearing activity; wait for the condition to finish.

END OF STEPS

□

TAP-119: Clear ’Circuit Breaker/Power Failure ″A or B″ or ″A and B″’

Overview

This procedure is used to clear a power failure by resetting the circuit breaker on the power line filter(s) associated with the unlit ***PWR OUTPUT*** LED. This procedure is performed for a selected shelf by clearing the voltage supply problem at the battery distribution and fuse bay (BDFB) or by replacing a failed power filter on a shelf.

Important! The Power line filter A is located on the left side of each shelf and power line filter B is located on the right side of each shelf. Verify by checking the designations on the bay metal shelf cover hinge bracket, below the power filter.

Important! Contact the maintenance support organization before proceeding if a failure of both circuit breakers (A and B) or both feeders (A and B) to a bay exists.

Procedure

1 Are any circuit breaker ***PWR OUTPUT*** LEDs not lit on the shelf associated with the alarm condition?

IF...	THEN...
YES	Continue with Step 2.
NO	Continue with Step 4.

WARNING

Automatic Power Shutdown (APSD) of the OA output will not be available during the system reset caused by an electrical power disruption.

2 Reset the circuit breaker by operating the breaker to the ON position.

3 Did the circuit breaker remain in the ON position and the ***PWR OUTPUT*** LED for the circuit breaker remain on?

IF...	THEN...
YES	***STOP! YOU HAVE COMPLETED THIS PROCEDURE.***
NO	Go to Step 3 of the section One Power Feeder Cable is NOT Supplying Voltage to a Bay (13-60).

4 Are All ***PWR OUTPUT*** LEDs extinguished for all shelves in the bay?

IF...	THEN...
YES	Go to Step 6.
NO	Continue with Step 5. **Important!** If the EI circuit pack (User Panel) has any defective LEDs, you may not see a MJ LED. ″DLP-502: Test LEDs on Circuit Packs″ (14-6) can be used to test the LEDs if you suspect EI circuit pack LED problems.

5 Is the MJ LED on?

IF...	THEN...
YES	Go to Step 1 of the section: One Power Feeder Cable is NOT Supplying Voltage to a Bay (13-60).
NO	Go to Step 3 of the section: One Power Feeder Cable is NOT Supplying Voltage to a Bay (13-60).

WARNING

Automatic Power Shutdown (APSD) of the OA output will not be available during the system reset caused by an electrical power disruption.

CAUTION

Consult with Technical Support personnel if you have any questions regarding the power cables.

6 Both power feeder cables are NOT supplying voltage to the bay that have their PWR OUTPUT LEDs off. Check at the Battery Distribution Fuse Board (BDFB) or equivalent, visually check within the bay for loose connections, power cable problems between the BDFB and the shelf with the failure and correct the voltage supply problem.

7 Was a problem found and corrected?

IF...	THEN...
YES	***STOP! YOU HAVE COMPLETED THIS PROCEDURE***
NO	Go to Step 11 of the section, One Power Feeder Cable is NOT Supplying Voltage to a Bay (13-60).

END OF STEPS

One Power Feeder Cable is NOT Supplying Voltage to a Bay

1 At the CIT, click on the **FAULT-NE Condition List** to obtain a report.

2 Determine from the report which power feeder cable is not providing power to the bay or the power line filter for that feeder is defective.

CAUTION

Step 3 through Step 5 requires an input voltage measurement at the power filter jacks of the appropriate power feeder.

3 Remove the appropriate shelf cover(s) to access the power line filter. Voltage input measuring jacks (white and red) are on the front of each filter. Each shelf has two power line filters. The 48V power line filter associated with the A feeder is on located the left and the B feeder power line filter is on the right.

4 Measure the input voltage at the measuring jacks of the appropriate power line filter.

5 Does the input voltage measure between -42.75 and -60 volts?

IF...	THEN...
YES	Go to Step 8.
NO	Continue with Step 6.

WARNING

Automatic Power Shutdown (APSD) of the OA output will not be available during the system reset caused by an electrical power disruption.

CAUTION

Consult the Technical Support personnel if you have any questions when checking the power cables.

6 Check at the Battery Distribution Fuse Board (BDFB) or equivalent, visually check within the bay for loose connections, power cable problems between the BDFB and the shelf with the failure and correct the voltage supply problem.

7 Was a problem found and corrected?

IF...	THEN...
YES	***STOP! YOU HAVE COMPLETED THIS PROCEDURE.***
NO	Go to Step 11.

CAUTION

Step 8 through Step 10 requires replacement of a power filter. Replacing the wrong power filter will interrupt power to the shelf providing service. The 48V power line filter associated with the A feeder is located on the left; and the B feeder power line filter is on the right. Verify the proper filter is being used by checking the rear panel designations next to the filters plug-in socket.

8 Contact Technical Support personnel to notify them you are about to start replacing a power filter on a shelf.

WARNING

Automatic Power Shutdown (APSD) of the OA output will not be available during the system reset caused by an electrical power disruption.

9 Replace the appropriate shelf power line filter. For details, refer to "DLP-522: Replace Power Line Filter" (14-49).

10 Did the Circuit Breaker/Power "A or B" alarm condition clear?

IF...	THEN...
YES	Continue with Step 12.
NO	Continue with Step 11.

11 Consult the appropriate Technical Support organization for further technical assistance.

Important! The possibility exists that the system may be improperly grounded. While a ground reading of 1 Ohm or less is indicative of a good tie to ground, the ground bar to which the system is tied may be incorrect and could, therefore, allow damaging current/spikes from other equipment to adversely affect the system and the power filter. A site survey of the ground bar system is required to verify that the system is properly connected.

12 Reinstall the appropriate shelf cover. For details, go to ″DLP-511: Install/Remove Shelf Cover″ (14-19).

END OF STEPS

□

TAP-121: Clear ’No CP Expected in Slot’

Overview

A circuit pack was inserted in a bay slot not meant for that type of circuit pack, for example, a one or two wide circuit pack was inserted in a three wide bay slot.

Procedure

Important! Some circuit packs are keyed so they will not fit in other circuit pack slot locations.

1 At the CIT, click on the **FAULT-NE Condition List** to obtain a report.

2 Using the AID column from the report (Step 1), identify the appropriate shelf associated with the `No CP expected in Slot` alarm condition.

Important! This error message can occur when reconfiguring an existing, in-service system to another configuration, for example going from an 80-channel to a 40-channel configuration.

3 Remove the shelf cover. All connections can be accessed from the front. For details, go to ″DLP-511: Install/Remove Shelf Cover″ (14-19).

4 Do office records or the ***WaveStar® OLS 1.6T Installation Manual*** (365-575-790), Bay Configurations, show that the slot(s) should contain a circuit pack of this type? For example, an OTU in one of the three slots assigned to an OA will cause the ’No CP Expected in Slot’ alarm condition.

IF...	THEN...
YES	Check office records to determine correct circuit pack or consult the appropriate maintenance support organization for technical assistance. If a circuit pack will be inserted, continue with Step 7, or ***STOP! YOU HAVE COMPLETED THIS PROCEDURE***.
NO	Remove the circuit pack, then continue with Step 5.

5 Reinstall the shelf cover. For details, go to ″DLP-511: Install/Remove Shelf Cover″ (14-19).

6 ***STOP! YOU HAVE COMPLETED THIS PROCEDURE.***

7 Is the circuit pack to be replaced an OA/OTU/OMU/ODU/ORS/WAD circuit pack?

IF...	THEN...
YES	Continue with Step 8.
NO	Continue with Step 9.

CAUTION

SERVICE AFFECTING - Failure to follow instructions in this step could result in service interruption.

8 Notify the person that is responsible for the optical line or channel associated with the service or protection signals assigned to this circuit pack; (1) to manually switch the service line to a protection line, and (2) to ensure that all protection lines or optical channels that are assigned to this circuit pack are not being used for service.

Another option is to restore service on a different Optical Line System or route.

Important! A series number ***S1:2*** is the same series number as ***S1:4***.The 2 and 4 refer to minor changes within series 1.

9 Obtain a replacement circuit pack with the same or a higher series number and install it. For details, go to ″DLP-514: Remove and/or Install Circuit Pack″ (14-30).

10 Wait the time indicated in Table 13-6, ″Waiting Times″ (13-66). These times are worst case times; alarm may clear sooner.

Important! Replacing the EI circuit pack in either an End Terminal, or Repeater will cause the system controller to reboot. Reseating the EI circuit pack in the Repeater will also cause the System Controller to reboot. After replacing an EI circuit pack, the SYStem IDentifier (SYSID) in the Network Service Access Point (NSAP) address will change; the local craft technician should retrieve the new SYSID from the network element, for example, Repeater, by clicking on Configuration and Installation Provisioning, and go to the second NSAP Address Information window using the CIT, and inform the SNMS technicians. After replacement or reseating of the EI circuit pack, verify that the system clock is correct. If necessary, reset the system clock.

11 Is the FAULT LED lighted on the replacement circuit pack?

IF...	THEN...
YES	Then go to ″TAP-108: Address Missing or Incorrect Response″ (13-20).
NO	Then continue with Step 12.

12 Is the circuit pack just replaced an OA/OTU/OMU/ODU/ORS/WAD circuit pack?

IF...	THEN...
YES	Then continue with Step 13.
NO	Then continue with Step 14 (if EI, OMON, or SUPVY).

13 Notify the person that is responsible for all affected service protection signals assigned to this OA/OTU/OMU/ODU/ORS/WAD that this Optical Line can now be returned to service.

14 Reinstall the shelf cover. For details, go to ″DLP-511: Install/Remove Shelf Cover″ (14-19).

15 Is the CR/PROMPT, MJ/DEFERRED or MN LED lighted on the EI circuit pack (User Panel)?

IF...	THEN...
YES	Go to ″TAP-102: Clear CR/PROMPT, MJ/DEFERRED, MN LED, or TCA″ (13-5)
NO	***STOP! YOU HAVE COMPLETED THIS PROCEDURE.***

END OF STEPS

Table 13-6 Waiting Times

CP Inserted	Waiting Time (minutes)
EI	15-60
OA	5
ODU	15
OMON	3
OMU	15
ORS	3
OTU	3
SUPVY	10
WAD	1

TAP-124: Address 'Reset in Progress'

Overview

This procedure explains how to monitor a `Reset in Progress` operation and correct problems.

Procedure

1 Is the MJ LED lighted?

IF...	THEN...
YES	Wait 30 - 60 minutes, depending on system size, before proceeding with Step 2.
NO	Continue with Step 5.

WARNING

Automatic Power Shutdown (APSD) of the OA output will not be available during the system reset caused by the following maintenance action.

2 At the CIT, initiate a login session. For details, go to "DLP-518: Initiate or Terminate Login Session to a NE Using WaveStar® OLS 1.6T CIT" (14-43).

3 At the CIT, click on the **FAULT-NE Condition List** to obtain an updated report.

4 Is `Reset in Progress` still reported?

IF...	THEN...
YES	Then continue with Step 5.
NO	Then continue with Step 8.

5 Wait 10 minutes or until the MJ LED is off at the EI circuit pack/User Panel.

6 At the CIT, click on the **FAULT-NE Condition List** to obtain an updated report.

7 Is `reset in progress` still reported?

IF...	THEN...
YES	Go to "TAP-108: Address Missing or Incorrect Response" (13-20).
NO	Continue with Step 8.

8 Is the CR/PROMPT, MJ/DEFERRED or MN LED lighted?

IF...	THEN...
YES	Go to "TAP-102: Clear CR/PROMPT, MJ/DEFERRED, MN LED, or TCA" (13-5).
NO	***STOP! YOU HAVE COMPLETED THIS PROCEDURE.***

END OF STEPS

□

TAP-125: Clear ’FLASH Unrecognizable Code’

Overview

The software code stored in the active-partition memory of the FLASH Memory Module (FMM) is corrupted or its version is not recognized by the BOS circuit pack in the SYSCTL slot.

Procedure

Important! The `FLASH Unrecognizable Code` **condition means that the software is bad. If the database is corrupt, it will be recognized as such and automatically backed up. (There are two copies of the database on the FMM.)**

1 At the CIT, select **VIEW-Software Release**.

2 Refer to the Network Element (NE) portion of the dialog box and record the software release information for the line entries, `active` and in`active in the partition column`.

3 Download correct software to the FLASH memory module following the instructions provided in OPERATION:″NTP-002: Install Software (Initial Installation/Upgrade/Change) into the CIT and a Network Element″ (12-3).

END OF STEPS

□

TAP-126: Clear ’FLASH/SYSCTL Code Mismatch”

Overview

The version of software code stored in the active partition on the FLASH memory module (FMM) is different from the software version in the BOS SYSCTL circuit pack. The system network element is currently functioning from the code running in the SYSCTL circuit pack.

In WaveStar® OLS 1.6T a FLASH/SYSCTL code mismatch condition may arise from either of the following two conditions: (1) The version of the software executing in memory on the SYSCTL circuit pack is different from the version of the software stored on the active partition of the FMM. This condition can only arise when the FMM is removed and another FMM with a different version of the software stored on its active partition is inserted into the BOS circuit pack acting as the SYSCTL. (2) The active partition of the FMM is corrupted.

The FLASH/SYSCTL code mismatch condition is cleared by ensuring that the versions of the software on the active partition of the FMM and software executing in memory on the SYSCTL match. The following actions may be required:

- Execute **FAULT-Reset** and click on `System`. This will cause the FMM to download code from the active FMM partition to the BOS SYSCTL circuit pack. Use this option only if the version of the software on the active FMM partition is what you intend on Upgrading/Change to next. Ensure the software on the active FMM partition is not in a corrupted state
- Perform a remote download of the required version of software from a remote network element (NE). This will copy software from another network element to the inactive FMM partition of the target NE. Then from the CIT execute **FAULT-Reset-System** and click on System. Use this option only if it has been determined that the software version on the active FMM partition and the software version executing in memory on the SYSCTL

circuit pack are the same. This suggests that the software on the active partition of the FMM and the BOS SYSCTL in Slot 10 has been corrupted in which case you want to replace it with a fresh copy. Typically, this means downloading a fresh copy from a remote NE or CIT-PC.

- Download the code from the CDs through the CIT to the FMM inactive partition and then execute **FAULT-Reset-System** and click on System. Use this option as an alternative to downloading software code from a remote NE.

Procedure

1 At the CIT, select **VIEW-Software Release**.

2 Refer to the report and record the software release information from the `active line entry in the partition column`. This software release is now running in the FMM and in the BOS SYSCTL in slot 10.

3 Refer to the report and record the software release information from the line entry `inactive line entry in the partition column`.

4 Are the software releases recorded in Step 2 and Step 3 different?

IF...	THEN...
YES	A software version mismatch may be the cause. Continue with Step 5 to determine the correct software version.
NO	The software on the Active FMM Partition or in the SYSCTL in slot 10 is in a corrupted state. Continue with Step 11 to install a fresh copy of the software.

5 Contact technical support to determine which of the two software releases is supposed to be running in the system network element.

6 Is the correct software release stored in Step 3?

IF...	THEN...
YES	Use this as the source for a fresh copy to be installed. Continue with Step 7 for installation instructions.
NO	A fresh copy of the software may have to be downloaded from a remote NE or CIT-PC. Continue with Step 11.

WARNING

Automatic Power Shutdown (APSD) of the OA output will not be available during the system reset caused by the following maintenance action.

Important! The CIT will disconnect from the network element when the FAULT-Reset command is executed. During the reset time, the miscellaneous discrete control points are deactivated.

7 At the CIT, select **FAULT-Reset-System and click on System**.

8 Wait 15-30 minutes or until the MJ LED stops flashing and is extinguished on the EI circuit pack (User Panel). Time to wait will vary depending on system size.

9 At the CIT, click on the **FAULT-NE Condition List** to obtain a report.

10 Is the `FLASH/SYSCTL Code Mismatch` condition still listed?

IF...	THEN...
YES	Consult the appropriate maintenance support organization for technical assistance before proceeding with other trouble clearing procedures.

IF...	THEN...
NO	STOP! YOU HAVE COMPLETED THIS PROCEDURE.

11 Is the correct software release running in a remote network element and is the SUPVY data link good to that network element?

IF...	THEN...
YES	Go to OPERATION:″NTP-003: Copy Software from One Network Element to Another Network Element″ (12-5) to copy software.
NO	Go to OPERATION:″NTP-002: Install Software (Initial Installation/Upgrade/ Change) into the CIT and a Network Element″ (12-3) to install software.

12 At the CIT, click on the **FAULT-NE Condition List** to obtain a report.

13 Is the `FLASH/SYSCTL Code Mismatch` condition still listed?

IF...	THEN...
YES	Consult the appropriate maintenance support organization for technical assistance before proceeding with other trouble clearing procedures.
NO	STOP! YOU HAVE COMPLETED THIS PROCEDURE.

END OF STEPS

□

TAP-127: Clear ’Unexpected CP Type’

Overview

The **Unexpected CP Type**condition is issued whenever the system software detects a difference between what it expects in a circuit pack (CP) slot and which CP is actually in the slot. This condition is normally cleared by correcting the difference (wrong CP type or incomplete records).

Procedure

Important! Do not remove any additional circuit packs from the shelf until the **Unexpected CP Type**condition has been cleared.

1. At the CIT, click on the **FAULT-NE Condition List** to obtain a report.
2. Using the AID column from the report (Step 1), identify the appropriate shelf associated with the Unexpected CP Type alarm condition.
3. From the System View double click on the appropriate shelf.
4. Using the mouse pointer, select the circuit pack and right click to display the sub-menu.
5. Click on **View Details.**
6. Determine from office records the correct CP type apparatus code, the type of associations required, and wavelength (if required) for the slot in question.
7. Compare the apparatus code on the report with the office records required apparatus code and wavelength (if required) and determine the correct CP type.

8 If required, remove the appropriate shelf cover. All connections can be accessed from the front. For details, go to ″DLP-511: Install/Remove Shelf Cover″ (14-19).

9 Is the correct CP actually plugged into the slot?

IF...	THEN...
YES	Continue with Step 19.
NO	Continue with Step 10.

10 Is the circuit pack to be replaced an OA/OTU/OMU/ODU/ORS/WAD circuit pack?

IF...	THEN...
YES	Continue with Step 11.
NO	Continue with Step 12.

CAUTION

SERVICE AFFECTING - Failure to follow instructions in Step 12 could result in service interruption.

11 Notify the person that is responsible for the optical line or channel associated with the service or protection signals assigned to this circuit pack; (1) to manually switch the service line or channel to a protection line, and (2) to ensure that all protection lines or channels that are assigned to this circuit pack are not being used for service. Another option is to restore service on a different Optical Line System or route.

12 Obtain the correct circuit pack type as identified in Step 7 and install it in place of the circuit pack generating the **Unexpected CP Type Failure**. For details, go to ″DLP-514: Remove and/or Install Circuit Pack″ (14-30).

13 At the CIT, select **CONFIGURATION-Circuit Connection** and use the Circuit Connection Wizard to add the required associations related to the new circuit pack. For details, refer to "Introduction to Provisioning" (4-2).

14 Wait the time indicated in Table 13-7, "Waiting Times" (13-72). These times are worst-case times; alarm may clear sooner.

Important! Replacing the EI circuit pack in either an End Terminal, or Repeater will cause the system controller to reboot. Reseating the EI circuit pack in the Repeater will also cause the System Controller to reboot. After replacing an EI circuit pack, the SYStem IDentifier (SYSID) in the Network Service Access Point (NSAP) address will change; the local craft technician should retrieve the new SYSID from the network element, for example, Repeater, by clicking on Configuration - Installation Provisioning to obtain the Installation Provisioning Wizard, then go to the NSAP Address Information window using the CIT, then inform the SNMS technicians. After replacement or reseating of the EI circuit pack, verify that the system clock is correct. If necessary, reset the system clock.

15 Is the FAULT LED lighted on the replacement circuit pack?

IF...	THEN...
YES	Go to Step 20. **Important!** You can expect to see alarm messages for ODU and OMU warm-up in progress.
NO	Continue with Step 16.

16 Was an OA/OTU/OMU/ODU/ORS/WAD circuit pack just replaced in Step 12?

IF...	THEN...
YES	Continue with Step 17.
NO	Continue with Step 18 (if BOS, EI, OMON, or SUPVY).

17 Notify the person responsible for all affected service protection signals assigned to this OA/OTU/OMU/ODU/ORS/WAD that this Optical Line can now be returned to service.

18 Reinstall the shelf cover. ″DLP-511: Install/Remove Shelf Cover″ (14-19).

19 Are all the associations related to this slot of a compatible type?

IF...	THEN...
YES	Continue with ″TAP-108: Address Missing or Incorrect Response″ (13-20).
NO	Delete the incompatible associations and add the compatible associations. **Important!** If the circuit pack was just installed, wait five minutes before deleting the incompatible associations.

20 Is the CR/PROMPT, MJ/DEFERRED or MN LED lighted on the EI circuit pack (User Panel)?

IF...	THEN...
YES	Refer to the TAP-102: Clear CR/PROMPT, MJ/DEFERRED, MN LED, or TCA (13-8).
NO	***STOP! YOU HAVE COMPLETED THIS PROCEDURE.***

END OF STEPS

Table 13-7 Waiting Times

CP Inserted	Waiting Time (minutes)
BOS	15-60
EI	15-60
OA	5
ODU	15
OMON	3
OMU	15
ORS	3
OTU	10
SUPVY	10
WAD	1

TAP-128: Clear Trouble In CIT (CIT Does Not Respond to Commands)

Overview

This procedure is used to clear trouble within the CIT such as a software hang-up or a malfunction.

Procedure

1 Is the mouse operational?

IF...	THEN...
YES	Do the following: 1. Press the **CTL+ALT+DEL** keys. The system displays the NT/Close Program dialog box. 2. Click **Task Manager if running NT, otherwise, continue with Step 3**. 3. Select **WaveStar CIT** 4. Select **End Task**. 5. Continue with Step 4.
NO	Continue with Step 2.

2 Perform a hard boot on the PC by shutting down and then restarting the computer.

3 After the PC reboots is the WaveStar CIT icon on the desktop?

IF...	THEN...
YES	Continue with Step 4.
NO	Refer to the *WaveStar® Optical Line System (OLS) 1.6T Software Release Description,* (Comcode 1091514401) to reload the CIT software and/or replace the PC.

4 Log into the network element. For details, go to ″DLP-501: Connect and Condition Craft Interface Terminal (CIT)″ (14-4).

5 Were you able to log into the NE?

IF...	THEN...
YES	***STOP! YOU HAVE COMPLETED THIS PROCEDURE.***
NO	Reload the WaveStar® OLS 1.6T CIT software. For details, go to Operations: ″NTP-002: Install Software (Initial Installation/Upgrade/Change) into the CIT and a NE″ (12-3).

END OF STEPS

□

TAP-129: Address ’Circuit Pack Booting’

Overview

This procedure explains how to address a ’Circuit Pack Booting’ condition. The circuit pack can be a BOS, OA, ODU, OMON, ORS, OTU, SUPVY, or WAD circuit pack, but not an EI circuit pack. After several minutes, the circuit pack LEDs react as follows:

red FAULT LED is lit continuously

green ACTIVE LED is flashing continuously.

After the boot cycle has completed and the circuit pack has been determined to be functional, the green ACTIVE LED remains lit and the red FAULT LED goes off.

The specific conditions apply to the following circuit packs:

BOS booting (SYSCTL, BAY-OH-CTL for sysctl, bayctl, and ohctl circuit packs)

OA booting

ODU booting

OMON booting

OMU booting

ORS booting

OTU booting

SUPVY booting

WAD booting

Procedure

1 At the CIT, click on the **FAULT-NE Condition List** to obtain a report.

2 Using the AID column from the report (Step 1), identify the appropriate shelf associated with the ’Circuit Pack Booting’ condition.

3 Remove the appropriate shelf cover. All connections can be accessed from the front. For details, refer to ″DLP-511: Install/Remove Shelf Cover″ (14-19).

4 Using the AID column from the report in Step 1, identify the correct circuit pack with the ’Circuit Pack Booting’ condition.

5 Wait 2–5 minutes or until the green LED starts flashing.

6 Is the green ACTIVE LED flashing continuously and the red FAULT LED on continuously?

IF...	THEN...
YES	Continue with Step 8
NO	Continue with Step 7.

7 Obtain another NE Alarm List report as in Step 1. Is the ’Circuit Pack Booting’ condition still listed?

IF...	THEN...
YES	Proceed to ″TAP-108: Address Missing or Incorrect Response″ (13-20).
NO	Continue with Step 9.

WARNING

Automatic Power Shutdown (APSD) of the OA output will not be available during the system reset caused by the following maintenance action.

8 Wait 5–30 minutes, depending on system size, or until the red LED goes out.

9 Is the CR/PROMPT, MJ/DEFERRED, or MN LED lighted on the EI circuit pack (User Panel)?

IF...	THEN...
YES	Proceed to "TAP-102: Clear CR/PROMPT, MJ/DEFERRED, MN LED, or TCA" (13-5)
NO	***STOP! YOU HAVE COMPLETED THIS PROCEDURE.***

END OF STEPS

□

TAP-130: Restore Network Element Operation After Power Loss

Overview

The network element power has been restored and one or more circuit packs have an ″unexpected″ or ″unrecognized″ failure, or the System Controller did not recover.

Procedure

1 Are the two green **PWR OUTPUT LEDs** lighted on all of the power filters on all of the equipped shelves?

IF...	THEN...
NO	Go to ″TAP-119: Clear ’Circuit Breaker/Power Failure ″A or B″ or ″A and B″’″ (13-53).
YES	Continue with Step 2.

WARNING

Automatic Power Shutdown (APSD) of the OA output will not be available during the system reset caused by an electrical power disruption.

2 If one or more FAULT LEDs are lighted during the reset process, they should be ignored during this procedure.

3 Wait 30 - 60 minutes, depending on system size, for all circuit packs to reset.

4 At the CIT, initiate a login session. For details, refer to ″DLP-518: Initiate or Terminate Login Session to a Network Element Using WaveStar® OLS 1.6T CIT″ (14-43).

5 Was login successful?

IF...	THEN...
NO	Continue with Step 6.
YES	Continue with Step 10.

WARNING

Automatic Power Shutdown (APSD) of the OA output will not be available during the system reset caused by an electrical power disruption.

6 Press the Restart button on the EI circuit pack.

7 Wait 30-60 minutes, depending on system size, for all circuit packs to reset.

8 At the CIT, initiate a login session. For details, refer to ″DLP-518: Initiate or Terminate Login Session to a NE Using WaveStar® OLS 1.6T CIT″ (14-43).

9 Was login successful?

IF...	THEN...
NO	Contact the appropriate maintenance support organization for further technical assistance.
YES	Continue with Step 10.

10 At the CIT, click on the **FAULT-NE Condition List** to obtain a report.

Important! Because it is possible that a slow recovery from a power outage may result in erroneous **FAULT-NE Condition List** reporting, a system reset may be necessary.

11 Are there any other conditions listed in the DESCRIPTION column of the report?

IF...	THEN...
NO	***STOP! YOU HAVE COMPLETED THIS PROCEDURE.***
YES	Continue with Step 12.

WARNING

Automatic Power Shutdown (APSD) of the OA output will not be available during the system reset caused by an electrical power disruption.

Important! The CIT will disconnect from the network element when the **FAULT-Reset** command is executed. Prior to rebooting, the customer specific values should be retrieved and printed. After the reboot, re-provision the non-defaulted values.

12 At the CIT, select **FAULT-Reset** and in the Reset Dialog box select System and click the OK button to reset the network element or press the Restart button on the EI circuit pack (User Panel).

13 Wait 30-60 minutes, depending on system size, or until the MJ LED is off on the EI circuit pack, whichever comes first.

14 At the CIT, initiate a login session. For details, refer to ″DLP-518: Initiate or Terminate Login Session to a NE Using WaveStar® OLS 1.6T CIT″ (14-43).

15 At the CIT, click on the **FAULT-NE Condition List** to obtain a report.

16 Are any conditions listed in the DESCRIPTION column of the report?

IF...	THEN...
NO	Continue with Step 17 to set the system date and time.
YES	Go to ″TAP-102: Clear CR/PROMPT, MJ/DEFERRED, MN LED, or TCA″ (13-5).

17 Select **CONFIGURATION-Provision-WaveStar_OLS_400G**. The word `system` is now displayed in the Enter AID field.

18 Click on **Provision**. The system displays the calendar to the right.

19 Select the correct date and time settings.

20 Click on **Apply** and then click on **YES**.

END OF STEPS

□

TAP-131: Clear ’Client Synchronization Failure’

Overview

The ’Client Synchronization Failure’ alarm condition is issued when the system software detects an input signal from a client is out of range, or when the OTU70 circuit pack has malfunctioned, such as the clock recovery or the clock reference circuit for a specific channel in the OTU70.

Important! If more than one channel for the same OTU70 indicates the same failure, then the user may suspect a defective OTU70 circuit pack. The OTU70 can have up to four inputs of OC-48 signals.

Procedure

1 At the CIT, click on the **FAULT-NE Condition List** to obtain a report.

2 Using the AID column from the report (Step 1), identify the appropriate shelf and slot location of the OTU with the alarm condition.

3 Remove the shelf cover. All connections can be accessed from the front. For details, refer to ″DLP-511: Install/Remove Shelf Cover″ (14-19).

CAUTION

SERVICE AFFECTING - Failure to follow instructions in Step 4 could result in service interruption.

4 Make a visual inspection of the incoming signal cable(s) and connections and correct any problems found. For details, refer to ″DLP-517: Inspect Optical Fiber(s)″ (14-42).

5 Did a visual inspection reveal any problems?

IF...	THEN...
YES	Continue with Step 6

IF...	THEN...
NO	Continue with Step 8

6 At the CIT, click on the **FAULT-NE Condition List** to obtain a report.

7 Is the failure condition cleared?

IF...	THEN...
YES	Continue with Step 25
NO	Continue with Step 8

CAUTION

SERVICE AFFECTING - Failure to follow instructions in Step 9 could result in service interruption.

8 Notify the person responsible for the optical line or channel associated with the service or protection signals assigned to this circuit pack to manually switch the service line or channel to protection and to ensure that all protection lines or channels assigned to this circuit pack are not being used for service.

9 Make an optical power measurement on the incoming optical jumper at the OTU. For details, refer to ″DLP-524: Connect Optical Power Meter for Measurement at OTU () IN () Port″ (14-51).

10 Is the optical power measurement within limits? For details, refer to OTU Input Power Range of ″DLP-524: Connect Optical Power Meter for Measurement at OTU () IN () Port″ (14-51).

IF...	THEN...
YES	Continue with Step 13
NO	Continue with Step 11

11 Clean the incoming fiber jumper. For details, refer to ″DLP-510: Inspect and Clean Optical Fiber Connectors″ (14-12).

12 Connect the incoming fiber to the correct OTU IN port.

Important! At this point, it appears that the local OTU is operating correctly. The trouble appears to be in the optical fiber jumper, optical line, or the client signal coming into the OTU.

13 Initiate a Trouble Report to the source of the failed incoming signal indicating the type of failure. If the source of the failed incoming signal returns a Trouble Report indicating ″no trouble found,″ then continue with Step 15.

14 STOP! YOU HAVE COMPLETED THIS PROCEDURE.

CAUTION

SERVICE AFFECTING - Failure to follow instructions in Step 15 could result in service interruption.

15 Remove the OTU identified in the AID column of Step 2 from the shelf. For details, refer to ″DLP-514: Remove and/or Install Circuit Pack″ (14-30).

CAUTION

The replacement OTU must have the same (or higher) circuit pack series number.

16 Obtain and install the replacement OTU. For details, refer to ″DLP-514: Remove and/or Install Circuit Pack″ (14-30).

17 Did the ’Client Synchronization Failure’ condition clear?

IF...	THEN...
YES	Continue with Step 24
NO	Continue with Step 18

18 Remove the optical input jumper, reclean and reconnect it to the OTU. For details, refer to ″DLP-510: Inspect and Clean Optical Fiber Connectors″ (14-12).

19 Did the ’Client Synchronization Failure’ condition clear?

IF...	THEN...
YES	Continue with Step 24
NO	Continue with Step 20

20 As required, check for a broken LBO, a damaged jumper, or bent or broken pins using the BERG MT370-01 pin kit for the METRAL pins. Refer to the backplane in repair/replacement procedures in the ***WaveStar® OLS 1.6T Installation Manual*** (365-575-790).

21 Reinstall the original OTU that was removed in Step 15. For details, refer to DLP-514: Remove and/or Install Circuit Pack (10-30).

22 Connect the optical fibers to the original OTU.

23 Initiate a Trouble Report to the source of the failed incoming signal indicating the type of failure. If the source of the failed incoming signal returns a Trouble Report indicating ″no trouble found,″ then contact the appropriate maintenance support organization for further technical assistance.

24 Notify the person responsible for all service and protection signals assigned to this circuit pack that the signals can be returned to service.

25 Reinstall the shelf cover. For details, refer to DLP-511: Install/Remove Shelf Cover (10-19).

26 STOP! YOU HAVE COMPLETED THIS PROCEDURE.

END OF STEPS

□

TAP-132: Clear 'Topology Construction In Progress'

Overview

This is normally a transient condition. Follow the procedure below to clear it.

Procedure

1 Wait 30 - 60 minutes, depending on system size, or until the CR/PROMPT, MJ/DEFERRED or MN LED goes off.

2 At the CIT, initiate a login session. For details, refer to "DLP-518: Initiate or Terminate Login Session to a Network Element Using WaveStar® OLS 1.6T CIT" (14-43).

3 At the CIT, click on the **FAULT-NE Condition List** to obtain a report.

4 Has the **topology construction in progress** condition cleared?

IF...	THEN...
YES	***STOP! YOU HAVE COMPLETED THIS PROCEDURE.***
NO	Go to "TAP-108: Address Missing or Incorrect Response" (13-20), to clear the unexpected response.

END OF STEPS

□

TAP-133: Clear 'FLASH Removed'

Overview

This procedure explains how to replace a FLASH memory module (FMM) that has been removed from the SYSMEM slot of the SYSCTL.

Important! Expect to see this condition when using the CIT to select the following menu items (in the order listed): **CONFIGURATION > PROVISION> BOS PACK > ENABLE FMM REMOVAL**

CAUTION

SERVICE AFFECTING - Failure to follow instructions in this procedure could result in service interruptions.

Procedure

CAUTION

Do not insert a FLASH Memory Module (FMM) into the SYSMEM slot of a BOS-BAYCTL or BOS-OHCTL circuit pack. This will cause loss of service.

1 Is the red LED on the BOS() SYSCTL circuit pack ON continuously?

IF...	THEN...
YES	Continue with Step 2.
NO	Consult the appropriate maintenance support organization for technical assistance before proceeding with other trouble clearing procedures.

2 Is the same FMM that was removed from this Network Element (NE) or a FMM with the same software version currently active on this NE available?

IF...	THEN...
YES	Continue with Step 3.
NO	Consult the appropriate maintenance support organization for technical assistance before proceeding with other trouble clearing procedures.

WARNING

Automatic Power Shutdown (APSD) of the OA output will not be available during the system reset caused by the following maintenance action.

3 Install the replacement FMM obtained in Step 2 into the BOS() SYSCTL SYSMEM slot. For details, go to ″DLP-514: Remove and/or Install Circuit Pack″ (14-30).

4 Wait approximately 5 - 15 minutes.

5 Is the red LED on the BOS() SYSCTL circuit pack blinking ON and OFF?

IF...	THEN...
YES	Continue with Step 6.
NO	Consult the appropriate maintenance support organization for technical assistance before proceeding with other trouble clearing procedures.

6 At the CIT, click on the **FAULT-NE Condition List** to obtain another report.

7 Is the same alarm condition still listed under the DESCRIPTION column of the report?

IF...	THEN...
YES	Consult the appropriate maintenance support organization for technical assistance before proceeding with other trouble clearing procedures.
NO	Continue with Step 8.

8 At the CIT, click on **CONFIGURATION-Provision**.

9 Click on the bay where the BOS ( ) SYSCTL (CP10) is located.

10 Click on the shelf where the BOS ( ) SYSCTL (CP10) is located.

11 Click on the SYSCTL (CP10) circuit pack.

12 Click on the **Provision** button.

13 Select **Disable** for the FMM Removal.

14 Click on the **Apply** button.

15 Is the red LED on the BOS() SYSCTL circuit pack OFF?

IF...	THEN...
YES	Continue with Step 16.
NO	Consult the appropriate maintenance support organization for technical assistance before proceeding with other trouble clearing procedures.

16 Reinstall the shelf cover. For details, go to ″DLP-511: Install/Remove Shelf Cover″ (14-19).

17 Is the CR/PROMPT, MJ/DEFERRED, or MN LED lighted on the EI circuit pack (User Panel)?

IF...	THEN...
YES	Proceed to ″TAP-102: Clear CR/PROMPT, MJ/DEFERRED, MN LED, or TCA″ (13-5)
NO	***STOP! YOU HAVE COMPLETED THIS PROCEDURE.***

END OF STEPS

□

TAP-144: Clear 'OMU/ODU warm-up in progress'

Overview

This condition indicates that the optical filters in the OMU/ODU circuit packs are below their correct operating temperature and the heater is in the process of correcting the filter temperature.

Procedure

1 Wait 15 minutes or until the OMU/ODU warm-up in progress clears.

2 Did the OMU/ODU warm-up in progress clear?

IF...	THEN...
YES	Continue with Step 3.
NO	Go to "TAP-108: Address Missing or Incorrect Response" (13-20).

3 Is the CR/PROMPT, MJ/DEFERRED or MN LED lighted?

IF...	THEN...
YES	Go to "TAP-102: Clear CR/PROMPT, MJ/DEFERRED, MN LED, or TCA" (13-5).
NO	***STOP! YOU HAVE COMPLETED THIS PROCEDURE.***

END OF STEPS

□

TAP-152: Address Incoming (LOF/LOS/LOL) Signal Failure

Overview

This procedure explains how to troubleshoot an incoming signal failure condition.

Important! One of the following incoming signal failures was detected:

- `Incoming HSBB LOL failure`
- `Incoming HSBB LOS failure`
- `Incoming OCH 10G LOS failure`
- `Incoming OCH 10G LOF failure`
- `Incoming OC-48/STM16 LOF failure`
- `Incoming OC-48/STM16 LOS failure`
- `Incoming OC-192/STM64 LOF failure`
- `Incoming OC-192/STM64 LOS failure`

Procedure

Important! OC-192/STM-64 Optical Translator Units report LOS when LOF is detected. Incoming OCH 10G LOF/LOS Alarm condition only appears at a repeater or the sink (drop) end terminal.

1 Refer to the AID column of the **FAULT-NE Condition List** and determine the bay location of the OTU with the incoming failure.

2 Remove the appropriate shelf cover. All connections can be accessed from the front. For details, go to ″DLP-511: Install/Remove Shelf Cover″ (14-19).

CAUTION

SERVICE AFFECTING - Step 3 could result in service interruption.

3 Make a visual inspection of the incoming signal cable(s) and connections and correct any problems found. For details, go to ″DLP-517: Inspect Optical Fiber(s)″ (14-42).

4 Did a visual inspection reveal any problems?

IF...	THEN...
YES	Continue with Step 5.
NO	Continue with Step 7.

5 At the CIT, click on the **FAULT-NE Condition List** to obtain a report.

6 Is the failure condition cleared?

IF...	THEN...
YES	Continue with Step 28.
NO	Continue with Step 7.

7 Is the failure condition either a LOS or LOF/LOL failure?

IF...	THEN...
LOS	Continue with Step 8.
LOF/LOL	Continue with Step 16.

CAUTION

SERVICE AFFECTING - Step 8 could result in service interruption.

8 Notify the person responsible for the optical line or optical channel associated with the service or protection signals assigned to this circuit pack; (1) to manually switch the service line or optical channel to a protection line, and (2) to ensure that all protection lines or optical channels that are assigned to this circuit pack are not being

used for service. Another option is to restore service on a different Optical Line System or route.

9 Make an optical power measurement on the incoming optical jumper at the OTU. For details, go to DLP-524: Connect Optical Power Meter for Measurement at OTU () IN () Port (10-52).

10 Was the optical power measurement within the limits?

IF...	THEN...
NO	Continue with Step 11.
YES	Continue with Step 16.

11 Is this OTU port associated with an ORS?

IF...	THEN...
NO	Continue with Step 12.
YES	Continue with ″TAP-234: Address ’Incoming LOS Signal Failure When OTU is Associated with ORS’″ (13-248).

12 Clean the incoming fiber jumper. For details, refer to ″DLP-510: Inspect and Clean Optical Fiber Connectors″ (14-12).

13 Connect the incoming fiber jumper to the correct OTU IN port.

Important! At this point, it appears that the local OTU is operating correctly. The trouble appears to be in the optical fiber jumper, optical line, or in the far-end network element.

14 Initiate a Trouble Report to the source of the failed incoming signal indicating the type of failure. If the source of the failed incoming signal returns a Trouble Report indicating ″no trouble found,″ then contact the appropriate maintenance support organization for further technical assistance before following the prescribed operating procedures to fault isolate the fiber jumper carrying the failed

incoming signal. For details, go to ″DLP-507: Identify Source of Incoming Signal″ (14-9).

15 ***STOP! YOU HAVE COMPLETED THIS PROCEDURE***.

Important! Only the HSBB OTU provides LOL indications. The clock and data recovery (CDR) circuit in the OTU receiver monitors LOL signal.

CAUTION

SERVICE AFFECTING - Step 16 could result in service interruption.

16 Notify the person that is responsible for the optical line or channel associated with the service or protection signals assigned to this circuit pack; (1) to manually switch the service line or channel to a protection line, and (2) to ensure that all protection lines or channels that are assigned to this circuit pack are not being used for service. Another option is to restore service on a different Optical Line System or route.

17 Remove the OTU indicating the incoming failure from the shelf. For details, go to ″DLP-514: Remove and/or Install Circuit Pack″ (14-30).

CAUTION

The replacement OTU must have the same (or higher) circuit pack series number.

18 Obtain and install the replacement OTU. For details, go to ″DLP-514: Remove and/or Install Circuit Pack″ (14-30).

19 At the CIT click on the **FAULT-NE Condition List** to obtain a report.

20 Did the incoming failure clear?

IF...	THEN...
YES	Continue with Step 27.
NO	Continue with Step 21.

21 Remove the optical jumper, reclean and reconnect it to the OTU. For details, go to ″DLP-510: Inspect and Clean Optical Fiber Connectors″ (14-12).

22 Did the incoming failure clear?

IF...	THEN...
YES	Continue with Step 27.
NO	Continue with Step 23.

23 As required, check for a broken LBO, a damaged jumper, or bent or broken pins; replace using the BERG MT370-01 pin kit for the METRAL pins. Refer to backplane pin repair/replacement procedures in the ***WaveStar® OLS 1.6T Installation Manual*** (365-575-790).

24 Reinstall the original OTU that was removed in Step 17. For details, go to ″DLP-514: Remove and/or Install Circuit Pack″ (14-30).

25 Connect the optical fibers to the original OTU.

26 Initiate a Trouble Report to the source of the failed incoming signal indicating the type of failure. If the source of the failed incoming signal returns a Trouble Report indicating ″no trouble found,″ then contact the appropriate maintenance support organization for further technical assistance before following the prescribed operating procedures to fault isolate the fiber jumper carrying the failed incoming signal. For details, go to ″DLP-507: Identify Source of Incoming Signal″ (14-9).

27 Notify the person responsible for all service and protection signals assigned to this circuit pack that they can be returned to service.

28 Reinstall the shelf cover. For details, go to ″DLP-511: Install/Remove Shelf Cover″ (14-19).

END OF STEPS

□

TAP-156: Clear ’J0 Mismatch’

Overview

This procedure is used to clear the J0 mismatch condition. The WaveStar® OLS 1.6T reads the section trace byte (J0) in the section overhead as OC-48/OC-192 signal. The Optical Translator Units (OTUs) are the only circuit packs capable of reading the section trace byte. This condition indicates that the incoming section trace does not match the expected incoming section trace.

Procedure

Important! An upstream transmission failure could cause multiple `J0 Mismatch` **alarms. Before attempting to clear this alarm, log in to the upstream network element for an NE Alarm List report for a transmission alarm and clear any transmission alarms.**

1 At the CIT, select **FAULT-Analysis-OTU Section Trace** and select appropriate bay shelf and OTU port to obtain a report.

2 Determine from the local office records what is the correct expected incoming message for this OC-48/OC-192.

3 Do the office records for the expected incoming message match the data in the Expected Incoming Message listed in the report from Step 1?

IF...	THEN...
YES	Continue with Step 4.
NO	Continue with Step 11.

4 At the CIT, click on the **FAULT-NE Condition List** to obtain an updated report.

5 Trace the fiber jumper connected to the IN port of the OTU, identified in the AID column, back to the source.

6 Do the office records indicate that the fiber jumper is connected to the correct source?

IF...	THEN...
YES	Continue with Step 14.
NO	Continue with Step 7.

CAUTION

SERVICE AFFECTING - Step 7 could result in service interruption.

7 Using local procedures connect the fiber jumper to the correct source.

8 At the CIT, click on the **FAULT-NE Condition List** to obtain an updated report.

9 Is the J0 mismatch condition still present?

IF...	THEN...
YES	Continue with Step 14.
NO	Continue with Step 10.

10 ***STOP! YOU HAVE COMPLETED THIS PROCEDURE.***

11 At the CIT, select **FAULT-Analysis-OTU Section Trace** and enter the correct expected incoming message and click OK.

12 At the CIT, click on the **FAULT-NE Condition List** to obtain an updated report.

13 Is the J0 mismatch condition still present?

IF...	THEN...
YES	Go to ″TAP-108: Address Missing or Incorrect Response″ (13-20).
NO	***STOP! YOU HAVE COMPLETED THIS PROCEDURE.***

Important! At this point, it appears that the local network element is operating correctly.

14 Initiate a Trouble Report to the upstream network element of the OTU indicating the J0 mismatch.

END OF STEPS

□

TAP-160: Clear ’Power ″A or B″ for ″Fan 1 or 2″ Failures’; or ’Power ″A and B″ for ″Fan 1 or 2″ Failures’

Overview

A problem in the fan assembly unit has caused the circuit breakers on the front panel of the fan assembly to operate.

`Power ″A″ for ″Fan 1″ Failure`: or

`Power ″A″ for ″Fan 2″ Failure`; or

`Power ″B″ for ″Fan 1″ Failure`; or

`Power ″B″ for ″Fan 2″ Failure`; or

`Power ″A″ and Power ″B″ for ″Fan 1″ Failure`; or

`Power ″A″ and Power ″B″ for ″Fan 2″ Failure`

Procedure

1 Replace the fan assembly associated with the operated circuit breaker. For details, go to ″DLP-527: Replace Fan Assembly″ (14-58).

2 At the CIT, click on the **FAULT-NE Condition List** to obtain a report.

3 Refer to the report obtained in Step 2, and determine if any of the above listed types of failure are listed?

IF...	THEN...
YES	Continue with Step 4.
NO	***STOP! YOU HAVE COMPLETED THIS PROCEDURE.***

4 Contact the appropriate maintenance support organization for further technical assistance. This failure indicates a problem in power cabling between the fan assembly unit and ″A″ or ″B″ feeder cables.

END OF STEPS

□

TAP-162: Clear 'Fan ″1″ or ″2″ or Clogged Dust Filter ″1″or ″2″ Failure'

Overview One or more of the fans have failed or the dust filter is clogged.

Procedure

1 Refer to the AID column of the **FAULT-NE Condition List** and determine the bay location for the appropriate dust filter for the failed fan.

Important! Replace ***ALL*** dust filters in the bay with a `Clogged dust filter 1 or 2` **or both alarm conditions.**

2 Replace all dust filters in the bay with the clogged filter alarm conditions. For details, go to ″DLP-526: Inspect/Replace Dust Filter″ (14-56).

3 Was the dust filter replaced?

IF...	THEN...
YES	Continue with Step 4.
NO	Continue with Step 6.

Important! Wait 10 minutes for the system temperature to stabilize.

4 At the CIT, click on the **FAULT-NE Condition List** to obtain a report.

5 Referring to the report obtained in Step 4, is the `Clogged dust filter ″1″` or `″2″`still listed?

IF...	THEN...
YES	Continue with Step 6.
NO	***STOP! YOU HAVE COMPLETED THIS PROCEDURE.***

Important! Ensure that there is an available supply of replacement fan assemblies.

6 Replace the fan assembly with a new one. For details, go to ″DLP-527: Replace Fan Assembly″ (14-58).

7 At the CIT, click on the **FAULT-NE Condition List** to obtain a report.

8 Referring to the report obtained in Step 7, is the `Fan Failure ″1″ or ″2″` still listed?

IF...	THEN...
YES	Consult the appropriate maintenance support organization for further technical assistance.
NO	***STOP! YOU HAVE COMPLETED THIS PROCEDURE.***

END OF STEPS

□

TAP-166: Clear ’APSD Active-Line’

Overview

This procedure is used to clear the APSD active-line condition. WaveStar® OLS 1.6T reduces the OA circuit pack output power to safe levels if an incoming signal loss is detected. The incoming signal loss is caused by a fiber cut, removed connectors or equipment failures. When the incoming signal loss is repaired, the system will resume normal operation and the APSD active - line condition will clear.

Procedure

Important! This condition is caused by an upstream facility failure or a failure on the receive side of the NE.

1 Are there any fault conditions with the same line identifier in the AID column in the report?

IF...	THEN...
YES	Continue with Step 2.
NO	Continue with Step 4.

Important! While following the instructions in the procedure(s) to which you will now be sent, you must ignore the `APSD active -line` **condition in the NE Condition List.**

2 Locate the condition identified in Step 1 of this procedure in Table 13-1, ″Trouble Clearing Task Index″ (13-5) of ″TAP-102: Clear CR/PROMPT, MJ/DEFERRED, MN LED, or TCA″ (13-5). Proceed to the indicated TAP to clear the condition. Remember to ignore the `APSD active -line` condition throughout the remainder of the trouble clearing procedure.

3 ***STOP! YOU HAVE COMPLETED THIS PROCEDURE***.

4 Wait 5 minutes.

5 At the CIT, click on the **Fault-NE Condition List** icon to obtain an updated report.

6 Is the `APSD active - line` condition still listed?

IF...	THEN...
YES	Continue with Step 7.
NO	***STOP! YOU HAVE COMPLETED THIS PROCEDURE***.

7 At this point, it appears that the local network element is operating correctly.

8 Initiate a Trouble Report to the upstream network element on this line indicating the `APSD active - line` condition.

END OF STEPS

□

TAP-167: Clear ’APSD Active-ODU’

Overview

The WaveStar® OLS 1.6T reduces the OA circuit pack output power to safe levels if an incoming loss of signal to the ODU circuit pack is detected. The incoming loss of signal is caused by a fiber cut, removed connectors, or equipment failures. When the incoming loss of signal is repaired, the WaveStar® OLS 1.6T will resume normal operation and the APSD active condition will clear.

Procedure

1 Are there any fault conditions with the same line identifier in the ***AID*** column of the report?

IF...	THEN...
YES	Continue with Step 2.
NO	Continue with Step 4.

Important! While following the instructions in the procedure(s) to which you will now be sent, you MUST ignore the APSD active condition in the **FAULT-NE Condition List** report.

2 Find the condition identified in Step 11 of this procedure in Table 13-2, ″Trouble Condition — TAP Cross Reference″ (13-9) of TAP-102: Clear CR/PROMPT, MJ/DEFERRED, MN LED, or TCA (13-8) and go to the indicated TAP to clear the condition (ignoring the APSD active-ODU) condition throughout the remainder of the trouble clearing procedure).

3 ***STOP! YOU HAVE COMPLETED THIS PROCEDURE.***

4 Wait 5 minutes.

5 At the CIT, click on the **FAULT-NE Condition List** to obtain an updated report.

6 Is the `APSD Active-ODU` condition still listed?

IF...	THEN...
YES	Continue with Step 7.
NO	***STOP! YOU HAVE COMPLETED THIS PROCEDURE.***

7 Identify the appropriate shelf associated with the failure condition.

8 Remove the appropriate shelf cover. All connections can be accessed from the front. For details, go to ″DLP-511: Install/Remove Shelf Cover″ (14-19).

CAUTION

SERVICE AFFECTING - Failure to follow instructions in Step 9 could result in service interruption.

9 Notify the person responsible for the optical line associated with the service or protection signals assigned to this circuit pack to 1) manually switch the service line to a protection line, and 2) ensure that all protection lines that are assigned to this circuit pack are not being used for service. Another option is to restore service on a different Optical Line System or route.

10 Replace the fiber jumper between OA OUT and ODU IN ports. For details, see DLP-510: Inspect and Clean Optical Fiber Connectors (10-12).

11 At the CIT, click on the **FAULT-NE Condition List** to obtain an updated report.

12 Is the `APSD Active-ODU` condition still listed?

IF...	THEN...
YES	suspect the OA as the cause and continue with Step 13.
NO	Continue with Step 18.

13 Obtain a replacement OA circuit pack with the same or a higher series number and install it in place of the OA circuit pack associated with the `APSD Active-ODU`. For details, refer to "DLP-514: Remove and/or Install Circuit Pack" (14-30).

14 Wait 5 minutes for the OA Fault LED to clear.

15 Is the `APSD Active-ODU` still listed?

IF...	THEN...
YES	Continue with Step 16.
NO	Continue with Step 18.

16 Remove the replacement OA installed in Step 13 and reinstall the original OA circuit pack removed in Step 13.

17 Contact the appropriate maintenance support organization for further technical assistance.

18 Notify the person responsible for the affected service protection signals assigned to this OA that this optical line can now be returned to service.

19 Reinstall the shelf cover. For details, go to "DLP-511: Install/Remove Shelf Cover" (14-19).

20 Baseline the replaced OA circuit pack. For details, refer to "DLP-529: Baseline Optical Parameters" (14-74).

21 Is the CR/PROMPT, MJ/DEFERRED or MN LED lighted on the EI circuit pack (User Panel)?

IF...	THEN...
YES	Refer to "TAP-102: Clear CR/PROMPT, MJ/DEFERRED, MN LED, or TCA" (13-5).
NO	***STOP! YOU HAVE COMPLETED THIS PROCEDURE.***

END OF STEPS

□

TAP-174: Clear ’Insufficient Span Loss (<10 dB)’

Overview

This procedure is used to clear a condition where the downstream OA is receiving too much power due to the span loss being <10 dB.

Important! This condition can be caused by missing or wrong LBO value downstream at the receive OA, or a defective OA. Other alarm conditions may be associated with this alarm and should be cleared first.

Procedure

Important! Span loss information is unique to each fiber type and distance. Check office records to determine the proper span loss or consult the appropriate maintenance support organization for technical assistance before proceeding.

1 At the CIT, click on the **FAULT-NE Condition List** to obtain an updated report.

2 Does the **FAULT-NE Condition List** report show an Insufficient Span Loss condition?

IF...	THEN...
YES	Then continue with Step 4.
NO	Then continue with Step 3.

3 ***STOP! YOU HAVE COMPLETED THIS PROCEDURE.***

4 Remove the shelf cover(s) associated with the OA(s). For details, go to ″DLP-511: Install/Remove Shelf Cover″ (14-19).

Important! Office records should provide the required LBO values for the system. If not, consult the appropriate Technical Support organization for further technical assistance.

CAUTION

SERVICE AFFECTING - Step 5 could result in service interruption.

5 Visually inspect the incoming signal cable(s) and connection(s) which should include the proper LBO values for the affected span and correct any problem found. For details, go to "DLP-517: Inspect Optical Fiber(s)" (14-42).

6 Did a visual inspection reveal any problems?

IF...	THEN...
YES	***STOP! YOU HAVE COMPLETED THIS PROCEDURE.***
NO	Continue with Step 7.

Important! At this point, it appears that the local Insufficient Span Loss condition may be caused by the downstream Network Element.

7 Initiate a Trouble Report to the downstream Network Element indicating the type of failure. If the downstream Network Element returns a Trouble Report indicating "No Trouble Found" then contact the appropriate maintenance support organization for further technical assistance before following the locally prescribed operating procedures to fault isolate the reason for low span loss.

END OF STEPS

□

TAP-177: Test LED In-Progress

Overview

This condition means that a LED test is being performed on this node. The user activated test may repeat itself 10 times (100 seconds).

Procedure

1 Wait for the LED tests to be completed.

2 Did the `TEST LED tests in-process` condition clear?

IF...	THEN...
YES	Then ***STOP! YOU HAVE COMPLETED THIS PROCEDURE***.
NO	Go to "TAP-108: Address Missing or Incorrect Response" (13-20).

END OF STEPS

□

TAP-178: Clear SUPVY Add Input LOS

Overview

This procedure is used to clear an alarm condition where an OA circuit pack detects loss of incoming SUPVY signal from SUPVY OUT port to OA SUP Tx port.

Procedure

Important! SUPVY Add Input LOS condition will cause the following conditions at three different locations, which are:

- From the Local End Terminal, will see `Express SUPVY DL Failure` and `Local SUPVY DL Failure`
- From the Repeater, will see `Local SUPVY DL Failure` and `Incoming SUPVY Channel LOS`
- From the Far End Terminal, will see `Express DL Failure`.

1 At the CIT, click on the **FAULT-NE Condition List** to obtain a report.

2 Remove the appropriate shelf cover. All connections can be accessed from the front. For details, go to ″DLP-511: Install/Remove Shelf Cover″ (14-19).

CAUTION

SERVICE AFFECTING - Step 3 could result in service interruption.

3 Visually inspect the incoming signal cable(s) and connection(s) between the SUPVY (OUT) and OA (SUP TX) circuit packs and correct any problems found. For details, go to ″DLP-517: Inspect Optical Fiber(s)″ (14-42).

4 Did the visual inspection result in correcting any problems?

IF...	THEN...
YES	Continue with Step 15.
NO	Continue with Step 5.

CAUTION

SERVICE AFFECTING - Step 5 could result in service interruption.

5 Replace the SUPVY circuit pack that is connected to the OA (SUP TX) indicated in the AID column of the report from Step 1. For details, go to ″DLP-514: Remove and/or Install Circuit Pack″ (14-30).

6 Obtain another report (refer to Step 1). Is the same failure condition still listed?

IF...	THEN...
YES	Continue with Step 7.
NO	Continue with Step 15.

CAUTION

SERVICE AFFECTING - Failure to follow instructions in Step 7 could result in service interruption.

7 Remove the replacement circuit pack (installed in Step 5) and reinstall the original circuit pack. For details, go to ″DLP-514: Remove and/or Install Circuit Pack″ (14-30).

8 Notify the person responsible for the service or protection signals assigned to this OA to:

- Manually switch the service line to a protection line
- Ensure all protection lines assigned to this OA are not being used for service.

9 Replace the OA circuit pack as indicated in the AID column of the report from Step 1. For details, go to ″DLP-514: Remove and/or Install Circuit Pack″ (14-30).

10 Obtain another report (as in Step 1). Is the same failure condition still listed?

IF...	THEN...
YES	Continue with Step 11.
NO	Continue with Step 14.

11 Remove the replacement circuit pack (installed in Step 9) and reinstall the original circuit pack. For details, go to ″DLP-514: Remove and/or Install Circuit Pack″ (14-30).

CAUTION

SERVICE AFFECTING - Step 12 could result in service interruption.

12 Replace the fiber jumper between the SUPVY (OUT) and OA (SUPTX) circuit pack.

13 Obtain another report (refer to Step 1). Is the same failure condition still listed?

IF...	THEN...
YES	Contact the appropriate maintenance support organization for further technical assistance.
NO	Then continue with Step 14.

14 Notify the person responsible for the optical line associated with the service or protection signals assigned to this OA that the Optical Line can now be returned to service.

15 Reinstall the shelf cover. For details, go to ″DLP-511: Install/Remove Shelf Cover″ (14-19).

16 Baseline the replaced circuit pack. For details, refer to ″DLP-529: Baseline Optical Parameters″ (14-74).

END OF STEPS

□

TAP-179: Clear 'Topology Construction Incomplete'

Overview

This procedure is used to clear a controller or transmission failure in the ring network.

Procedure

Important! This condition usually is cleared with the assistance of the Operations System Control Center. When the network is in this state, you will probably not be able to establish a login to one or more of the other nodes. If a remote login is possible and you need additional help, refer to "DLP-518: Initiate or Terminate Login Session to a NE Using WaveStar® OLS 1.6TCIT" (14-43). Otherwise, local CIT assistance will be required at those nodes.

1 At the local network element CIT click on the **FAULT-NE Condition List** and obtain a report.

2 Does a controller circuit pack condition (`BOS failure`, `BOS removed`, `SUPVY failure`, `SUPVY removed`) or an incoming alarm condition (`SUPVY channel fail`) appear in the report?

IF...	THEN...
YES	Continue with "TAP-102: Clear CR/PROMPT, MJ/DEFERRED, MN LED, or TCA" (13-5).
NO	Continue with Step 3.

3 Using office records for the network elements in the system, can you establish a login to a remote node?

IF...	THEN...
YES	Continue with Step 4.
NO	Continue with Step 8.

4 Establish a login to any of the other network elements. For detail, go to "DLP-518: Initiate or Terminate Login Session to a Network Element Using WaveStar® OLS 1.6T CIT" (14-43).

5 At the CIT, click on the **FAULT-NE Condition List** to obtain a report.

6 Does a controller circuit pack condition or an incoming alarm condition appear in the report?

IF...	THEN...
YES	Continue with ″TAP-102: Clear CR/PROMPT, MJ/DEFERRED, MN LED, or TCA″ (13-5).
NO	Continue with Step 7.

7 Repeat Step 4 through Step 6 for each of the remaining network elements listed in your office records, if possible.

8 Contact other nodes on the ring for local CIT assistance at those nodes or consult the Operations System Control Center and the appropriate technical maintenance support organization for assistance.

END OF STEPS

□

TAP-180: Clear `WAD Drop Channel LOS'

Overview

The power detector in the WAD circuit pack that is upstream from the loop out port has detected a loss of drop channel optical power.

Procedure

1 Remove the appropriate shelf cover. All connections can be accessed from the front. For details, go to "DLP-511: Install/Remove Shelf Cover" (14-19).

CAUTION

SERVICE AFFECTING - Failure to follow instructions in Step 2 could result in service interruption.

2 Notify the person responsible for the optical line associated with the service or protection signals assigned to this WAD circuit pack to:

- Manually switch the service to a protection line.
- Ensure all protection paths assigned to this WAD are not being used for service.

3 Replace the WAD circuit pack associated with this failure condition. For details, go to "DLP-514: Remove and/or Install Circuit Pack" (14-30).

4 At the CIT, click on the **FAULT-NE Condition List** to obtain a report.

5 Is `WAD drop channel LOS` still reported?

IF...	THEN...
YES	Continue with Step 6.
NO	Continue with Step 8.

6 Consult the appropriate Technical Support organization for further technical assistance.

7 ***STOP! YOU HAVE COMPLETED THIS PROCEDURE.***

8 Notify the person responsible for the optical line associated with the service or protection signals assigned to this WAD circuit pack that it can now be returned to service.

9 Reinstall the shelf cover. For details, go to ″DLP-511: Install/Remove Shelf Cover″ (14-19).

10 Is the CR/PROMPT, MJ/DEFERRED or MN LED lighted on the EI circuit pack (User Panel)?

IF...	THEN...
YES	Refer to ″TAP-102: Clear CR/PROMPT, MJ/DEFERRED, MN LED, or TCA″ (13-5).
NO	***STOP! YOU HAVE COMPLETED THIS PROCEDURE.***

END OF STEPS

□

TAP-181: Clear ’SUPVY Drop Output LOS’

Overview

This procedure is used to clear a SUPVY drop output LOS condition detected by the receive OA circuit pack.

Procedure

1 At the CIT, click on the **FAULT-NE Condition List** and obtain an NE Alarm List report.

2 Travel to the location or get assistance at the adjacent upstream network element.

3 At the upstream network element, check for the `SUPVY circuit pack failure`, `SUPVY ADD INPUT LOS` or any `SUPVY channel failure` condition.

IF...	THEN...
YES	Refer the Trouble Report to that office. ***STOP! YOU HAVE COMPLETED THIS PROCEDURE***.
NO	Continue with Step 4.

4 At the CIT, click on the **FAULT-NE Condition List** and obtain a report.

5 Remove the appropriate shelf cover. For details, go to ″DLP-511: Install/Remove Shelf Cover″ (14-19).

CAUTION

SERVICE AFFECTING - Failure to follow instructions in Step 6 could result in service interruption.

6 Notify the person responsible for the optical line associated with the service or protection signals assigned to this OA to:

- Manually switch the service line to a protection line
- Ensure all protection lines assigned to this OA are not being used for service.

7 Replace the OA circuit pack as indicated in the AlD column of the report from Step 1. For details, go to ″DLP-514: Remove and/or Install Circuit Pack″ (14-30).

8 Obtain another report (as in Step 1). Is the same failure condition still listed?

IF...	THEN...
YES	Continue with Step 9.
NO	Continue with Step 14.

CAUTION

SERVICE AFFECTING - Step 9 could result in service interruption.

9 Remove the replacement circuit pack (installed in Step 4) and reinstall the original circuit pack. For details, go to ″DLP-514: Remove and/or Install Circuit Pack″ (14-30).

10 At this point, it appears that the local network element is operating correctly.

11 Initiate a Trouble Report to the upstream network element of the optical line. If the source of the upstream network element returns a Trouble Report indicating ″no trouble found,″ then contact the appropriate maintenance support organization for further technical assistance before following the prescribed operating procedures to

fault isolate the cable/fiber carrying the failed incoming signal. For details, go to "DLP-507: Identify Source of Incoming Signal" (14-9).

12 Notify the person responsible for the optical line associated with the service or protection signals assigned to this OA that the Optical Line can now be returned to service.

13 Reinstall the shelf cover. For details, go to "DLP-511: Install/Remove Shelf Cover" (14-19).

14 Baseline the replaced circuit pack. For details, refer to "DLP-529: Baseline Optical Parameters" (14-74).

END OF STEPS

□

TAP-182: Clear ’OW1TYPE, OW2TYPE, or OW3TYPE’

Overview

This condition is caused by a provisioned difference between the OW1TYPE, OW2TYPE and OW3TYPE parameters and office records for the specified supervisory channels order wire(s) between the east and west sides of the Network Element. While provisioning the orderwire(s), the east and west sides must be provisioned the same. Otherwise, the above alarm condition(s) will be activated to make you aware that both sides are not provisioned the same. Clicking on the help screen button below the alarm condition will provide details on provisioning the parameters.

Procedure

1 At the CIT, click on **CONFIGURATION-Provision** command then click on the bay, shelf and **SUPVY CP** and **line ()** and click **Provision**.

2 Are the parameters provisioned per the office records?

IF...	THEN...
YES	Go to ″TAP-108: Address Missing or Incorrect Response″ (13-20).
NO	Then continue with Step 4.

3 ***STOP! YOU HAVE COMPLETED THIS PROCEDURE.***

4 From the office records, determine the correct provisioning parameters.

Important! If required, refer to the *WaveStar® OLS 1.6T Installation Manual, Release 6.1*, (365-575-790) for orderwire provisioning information).

5 Provision the various parameters to the correct parameter(s) per the office records and click on the **Apply** button.

END OF STEPS

□

TAP-184: Clear ’Bay Bus Failure, BC Bus Failure, OH Bus Failure’

Overview

A system fault algorithm has determined that a communications bus has failed. This could be caused by a circuit pack failure or bay cable problem. The actions required to clear this trouble are unique in that just replacing the failed circuit pack will not clear the fault condition, after the failed circuit pack is replaced the system must be reset.

Procedure

1 At the CIT, click on the **FAULT-NE Condition List** to obtain a report.

Important! The audit subsystem may fail other circuit packs.

2 Identify the failed circuit pack(s) listed ***before*** the `Bay Bus Failure`, `BC Bus Failure` or `OH Bus Failure` alarm conditions.

3 Identify the appropriate shelf (listed in the AID column) associated with the `Circuit Pack Failure` alarm condition in Step 2. Replace this circuit pack ***first***.

4 Remove the appropriate shelf cover. For details, refer to ″DLP-511: Install/Remove Shelf Cover″ (14-19).

5 Is the Fault LED lighted on the circuit pack identified in the AID column?

IF...	THEN...
YES	Continue with Step 6.
NO	Go to ″TAP-108: Address Missing or Incorrect Response″ (13-20).

6 Is the circuit pack to be replaced an OA/OTU/OMU/ODU/ORS/WAD circuit pack?

IF...	THEN...
YES	Continue with Step 7.
NO	Continue with Step 8 (for BOS(), SYSCTL, EI, OMON, or SUPVY().

CAUTION

SERVICE AFFECTING - Failure to follow instructions in Step 7 could result in service interruption.

7 Notify the person that is responsible for the optical line or channel associated with the service or protection signals assigned to this circuit pack to

- manually switch the service line or channel to a protection line and
- to ensure that all protection lines or channels that are assigned to this circuit pack are not being used for service.

Another option is to restore service on a different Optical Line System or route.

Important! A series number S1:2 is the same series number as S1:4. The 2 and 4 refer to minor changes within a series 1. The replacement circuit pack will not boot at this time, so if an OTU circuit pack is being replaced the laser will not turn on, therefore the value of the OTU port LBO cannot be determined at this time.

CAUTION

SERVICE AFFECTING - Step 8 could result in service interruption.

8 Obtain a replacement circuit pack with the same or higher series number and install it in place of the circuit pack with the lighted FAULT LED. For details, refer to "DLP-514: Remove and/or Install Circuit Pack" (14-30).

WARNING

Automatic Power Shutdown (APSD) of the OA output will not be available during the system reset caused by the following maintenance action.

9 At the CIT, select **FAULT-Reset** and in the Reset Dialog box select System and click the **OK** button to reset the network element or press the **Restart** button on the EI circuit pack (User Panel).

10 Wait 15-60 minutes, depending on system size, or until the MJ LED is off at the EI circuit pack (User Panel), or whichever comes first.

11 At the CIT, click on the **FAULT-NE Condition List** to obtain another report.

12 Is the FAULT LED lighted on the replacement circuit pack?

IF...	THEN...
YES	Contact the appropriate maintenance support organization for further technical assistance.
NO	Continue with Step 13.

13 Was an OTU circuit pack just replaced?

IF...	THEN...
YES	Continue with Step 14
NO	Continue with Step 15.

CAUTION

SERVICE AFFECTING - Step 14 could result in service interruption.

14 If required, the OTU (OUT) port LBO can now be determined. For details, go to ″DLP-528: LBO Applications″ (14-60).

15 Was an OA/OMU/ODU/ORS/WAD circuit pack replaced?

IF...	THEN...
YES	Continue with Step 16.
NO	Continue with Step 17 for BOS(), SYSCTL, EI, OMON, or SUPVY().

16 Notify the person that is responsible for the optical line associated with the service or protection signals assigned to this OA/OMU/ODU/ORS/WAD circuit pack that this Optical Line can now be returned to service.

17 Reinstall the shelf cover(s). For details, go to ″DLP-514: Remove and/or Install Circuit Pack″ (14-30).

18 Perform baseline on the OA if it was replaced. For details refer to ″DLP-529: Baseline Optical Parameters″ (14-74).

19 Is the CR/PROMPT, MJ/DEFERRED or MN LED lighted on the EI circuit pack (User Panel)?

IF...	THEN...
YES	Refer to ″TAP-102: Clear CR/PROMPT, MJ/DEFERRED, MN LED, or TCA″ (13-5).

IF...	THEN...
NO,	***STOP! YOU HAVE COMPLETED THIS PROCEDURE.***

END OF STEPS

TAP-186: Clear ’OMS (OA) LOS’

Overview

Optical Multiplex Section (OMS) is used to define the line between the Optical Multiplex Unit (OMU) OUT connector and IN connector of the Optical Amplifier (OA). This condition indicated that the OA has detected a total loss of signal.

Procedure

Important! A minimum of two associations must be present on the system to prevent this alarm.

1 At the CIT, click on the **FAULT-NE Condition List** to obtain a report.

2 Remove the appropriate shelf cover. All connections can be accessed from the front. For details, go to ″DLP-511: Install/Remove Shelf Cover″ (14-19).

CAUTION

SERVICE AFFECTING - Step 3 could result in service interruption.

3 Visually inspect the incoming signal cable between the OMU1 OUT port and the OA IN port and correct any problems found. For details, go to ″DLP-517: Inspect Optical Fiber(s)″ (14-42).

4 Did the visual inspection result in correcting any problems?

IF...	THEN...
YES	Continue with Step 5.
NO	Continue with Step 6.

5 Obtain another **FAULT-NE Condition List** report (refer to Step 1). Is the same failure condition still listed?

IF...	THEN...
YES	Continue with Step 6.
NO	Continue with Step 17.

CAUTION

SERVICE AFFECTING - Step 6 could result in service interruption.

6 Notify the person responsible for the optical line associated with the service or protection signals assigned to this optical multiplex section to:

- Manually switch the service line(s) or channel (s) to a protection line(s).
- Ensure all protection lines assigned to this OMU1 are not being used for service.

7 Replace the fiber jumper between the OMU1 OUT port and the OA IN port.

8 Obtain another **FAULT-NE Condition List** report (refer to Step 1). Is the same failure condition still listed?

IF...	THEN...
YES	Continue with Step 9.
NO	Continue with Step 16.

9 Replace the OA associated with this optical multiplex section. For details, go to ″DLP-514: Remove and/or Install Circuit Pack″ (14-30).

10 Obtain another **FAULT-NE Condition List** report (refer to Step 1). Is the same failure condition still listed?

IF...	THEN...
YES	Continue with Step 11.
NO	Continue with Step 16.

11 Remove the replacement circuit pack (installed in Step 9) and reinstall the original circuit pack. For details, go to ″DLP-514: Remove and/or Install Circuit Pack″ (14-30).

12 Replace the OMU1 associated with this optical multiplex section. For details, go to ″DLP-514: Remove and/or Install Circuit Pack″ (14-30).

13 Obtain another **FAULT-NE Condition List** report (refer to Step 1). Is the same failure condition still listed?

IF...	THEN...
YES	Continue with Step 14.
NO	Continue with Step 16.

14 Remove the replacement circuit pack (installed in Step 9) and reinstall the original circuit pack. For details, go to ″DLP-514: Remove and/or Install Circuit Pack″ (14-30).

15 Obtain another **FAULT-NE Condition List** report (refer to Step 1). Is the same failure condition still listed?

IF...	THEN...
YES	Contact the appropriate maintenance support organization for further technical assistance.
NO	Continue with Step 16.

16 Notify the person responsible for the optical line or channel associated with the service or protection signals assigned to this optical multiplex section that the section can be returned to service.

17 Reinstall the shelf cover. For details, go to "DLP-511: Install/Remove Shelf Cover" (14-19).

18 Perform baseline on the OA if it was replaced. For details, refer to "DLP-529: Baseline Optical Parameters" (14-74).

19 ***STOP! YOU HAVE COMPLETED THIS PROCEDURE.***

END OF STEPS

□

TAP-188: Clear ’OMS (ODU) LOS’

Overview

Optical Multiplex Section (OMS) is used to define the line between the Optical Amplifier (OA) OUT connector and IN connector of the Optical Demultiplexer Unit (ODU/ODUL). This condition indicated that the ODU/ODUL has detected a loss of signal.

Procedure

1 At the CIT, click on the **FAULT-NE Condition List** to obtain a report.

2 Remove the appropriate shelf cover. All connections can be accessed from the front. For details, go to ″DLP-511: Install/Remove Shelf Cover″ (14-19).

CAUTION

SERVICE AFFECTING - Step 3 could result in service interruption.

3 Visually inspect the incoming signal cable between the OA OUT port and the ODU/ODUL port and correct any problems found. For details, go to ″DLP-517: Inspect Optical Fiber(s)″ (14-42).

4 Did the visual inspection result in correcting any problems?

IF...	THEN...
YES	Continue with Step 5.
NO	Continue with Step 6.

5 Obtain another **FAULT-NE Condition List** report (refer to Step 1). Is the same failure condition still listed?

IF...	THEN...
YES	Continue with Step 6.

IF...	THEN...
NO	Continue with Step 18.

CAUTION

SERVICE AFFECTING - Step 6 could result in service interruption.

6 Notify the person responsible for the optical line or channel associated with the service or protection signals assigned to this optical multiplex section to:

- Manually switch the service line(s) or channel(s) to a protection line(s).
- Ensure all protection lines or channels assigned to this ODU/ODUL are not being used for service.

7 Replace the fiber jumper between the OA OUT port and the ODU/ODUL port.

8 Obtain another **FAULT-NE Condition List** (refer to Step 1). Is the same failure condition still listed?

IF...	THEN...
YES	Continue with Step 9.
NO	Continue with Step 16.

9 Replace the OA associated with this optical multiplex section. For details, go to ″DLP-514: Remove and/or Install Circuit Pack″ (14-30).

10 Obtain another **FAULT-NE Condition List** (refer to Step 1). Is the same failure condition still listed?

IF...	THEN...
YES	Continue with Step 11.

IF...	THEN...
NO	Continue with Step 16.

11 Remove the replacement circuit pack (installed in Step 9) and reinstall the original circuit pack. For details, go to ″DLP-514: Remove and/or Install Circuit Pack″ (14-30).

12 Replace the ODU/ODUL associated with this optical multiplex section. For details, go to ″DLP-514: Remove and/or Install Circuit Pack″ (14-30).

13 Obtain another **FAULT-NE Condition List** (refer to Step 1). Is the same failure condition still listed?

IF...	THEN...
YES	Continue with Step 14.
NO	Continue with Step 16.

14 Remove the replacement circuit pack (installed in Step 9) and reinstall the original circuit pack. For details, go to ″DLP-514: Remove and/or Install Circuit Pack″ (14-30).

15 Obtain another **FAULT-NE Condition List** report (refer to Step 1). Is the same failure condition still listed?

IF...	THEN...
YES	Contact the appropriate maintenance support organization for further technical assistance.
NO	Continue with Step 16.

16 Notify the person responsible for the optical line or channel associated with the service or protection signals assigned to this optical multiplex section that the section can be returned to service.

17 Perform baseline on the OA if it was replaced. For details, refer to ″DLP-529: Baseline Optical Parameters″ (14-74).

18 Reinstall the shelf cover. For details, go to ″DLP-511: Install/Remove Shelf Cover″ (14-19).

END OF STEPS

□

TAP-190 Clear ″OMON LOS″

Overview

This procedure is used to clear a loss of optical signal (LOS) condition detected by the OMON circuit pack.

Important! If the alarm condition ’DCM Failure’ is present in the alarm list report, go to ″TAP-212: Clear ’DCM Failure’ and/or Isolate Defective DCM Connections″ (13-176) and clear the ’DCM Failure’ alarm before attempting to clear the ’OMON LOS’ alarm condition.

Procedure

Important! Wait 15 minutes for the system to scan the OMON inputs after removing and installing cables between the OMON and OA or replacing the OMON or OA circuit pack.

1 At the CIT, click on the **FAULT-NE Condition List** to obtain a report.

2 Identify and locate the OMON circuit pack (and IN() port) listed in the AID column of the **FAULT-NE Condition List** report (see Step 1)

3 Remove the appropriate shelf cover. For details, go to ″DLP-511: Install/Remove Shelf Cover″ (14-19).

4 Identify the OA circuit pack that is associated with the OMON port determined in Step 2. You may use the fiber label on the fiber that is assigned to the OMON IN() port or refer to the *WaveStar® OLS 1.6T Installation Manual*, (365-575-790), for information on fiber connection to identify the circuit pack and signal source

5 Visually inspect the connections between the OMON port on the OA and the IN() port on the OMON and correct any problems found. For details, go to ″DLP-517: Inspect Optical Fiber(s)″ (14-42).

6 Did the visual inspection result in correcting any problems?

IF...	THEN...
YES	Continue with Step 7.
NO	Continue with Step 8.

7 Obtain another **FAULT-NE Condition List** report (refer to Step 1). Is the same failure condition still listed?

IF...	THEN...
YES	Continue with Step 8.
NO	Continue with Step 28.

8 Remove the fiber from the OMON port of the OA identified in Step 2.

9 Connect an optical power meter to the OMON port of the OA and obtain an optical power measurement

Important! The power level will vary depending on the number of channels, path loss, C or L band.

10 Is the power level greater than -37 dBm?

IF...	THEN...
YES	Continue with Step 11.
NO	Continue with Step 21.

11 Reconnect the fiber that was removed from the OMON port of the OA.

12 Remove the fiber from the IN () port, of the OMON circuit pack that is connected to the OA.

13 Connect the optical power meter to the fiber just removed and obtain a power measurement.

Important! The power level will vary depending on the number of channels, path loss, C or L band.

14 Is the power level greater than -37 dBm?

IF...	THEN...
YES	Continue with Step 17.
NO	Continue with Step 15.

Important! The *WaveStar OLS 1.6T Installation Manual,* (365-575-790) accessible thorough the CIT Help section, should provide assistance on routing the fiber jumper.

15 Using a new jumper, replace the fiber jumper between the OMON port of the OA and the IN () port of the OMON.

16 Obtain another **FAULT-NE Condition List** report (refer to Step 1). Is the same failure condition still listed?

IF...	THEN...
YES	Continue with Step 17.
NO	Continue with Step 28.

17 Replace the OMON circuit pack. For details, go to ″DLP-514: Remove and/or Install Circuit Pack″ (14-30).

18 Obtain another **FAULT-NE Condition List** report (refer to Step 1). Is the same failure condition still listed?

IF...	THEN...
YES	Continue with Step 19.
NO	Continue with Step 28.

19 Remove the replacement circuit pack (installed in Step 17) and reinstall the original circuit pack. For details, go to ″DLP-514: Remove and/or Install Circuit Pack″ (14-30).

20 Obtain another **FAULT-NE Condition List** report (refer to Step 1). Is the same failure condition still listed?

IF...	THEN...
YES	Contact the appropriate maintenance support organization for further technical assistance.
NO	Continue with Step 28.

CAUTION

SERVICE AFFECTING - Step 21 could result in a service interruption.

21 Notify the person for the optical line or channel associated with the service or protection signals assigned to this OA to:

- Manually switch the service line or channel to protection line or channel
- Ensure all protection lines or channels assigned to this OA are not being used for service

22 Replace the OA circuit pack associated with the AID column of the failure report for this OMON circuit pack. For details, go to ″DLP-514: Remove and/or Install Circuit Pack″ (14-30).

23 Obtain another **FAULT-NE Condition List** report (refer to Step 1). Is the same failure condition still listed?

IF...	THEN...
YES	Continue with Step 24.
NO	Continue with Step 26.

24 Remove the replacement circuit pack (installed in Step 22) and reinstall the original circuit pack. For details, go to ″DLP-514: Remove and/or Install Circuit Pack″ (14-30).

25 Obtain another **FAULT-NE Condition List** report (refer to Step 1). Is the same failure condition still listed?

IF...	THEN...
YES	Contact the appropriate maintenance support organization for further technical assistance. Then continue with Step 26 if advised to restore service to the regular facilities.
NO	Continue with Step 26.

26 Notify the person responsible for the optical line or channel associated with the service or protection signals assigned to this optical multiplex section that the section can now be returned to service.

27 Perform a baseline on the OA circuit pack if it was replaced. For details, refer to ″DLP-529: Baseline Optical Parameters″ (14-74).

28 Reinstall the shelf cover. For details, go to ″DLP-511: Install/Remove Shelf Cover″ (14-19).

END OF STEPS

□

TAP-192: Clear 'Local SUPVY DL Failure,' 'Express SUPVY DL Failure, or 'PROVDLTYPE Mismatch'

Overview

This condition can be caused by a provisioned difference between the east and west sides of a data link when provisioned for either a Local or Express data link. Clicking on the help screen button below the alarm condition will provide details on provisioning the parameters. These alarm conditions can be caused by certain upstream failures such as SUPVY booting, BOS overhead controller booting, or various SUPVY failure conditions.

When provisioning the originating and terminating ends of an Express Data Link Termination - Provisionable, the originating and terminating nodes must be different. For example, a three-node system: the originating node could be local-user and the terminating node must be local-network. The intermediate node for the Data Link Termination - Provisionable would be provisioned for Express on the east and west sides of the node. If the originating and terminating nodes are the same, an `Express SUPVY DL Failure` alarm condition is generated. If the intermediate node is not the same on the East and West sides, a `PROVDLTYPE Mismatch` alarm condition is generated.

When provisioning the originating and terminating ends of a Local Data Link Termination - Fixed, the originating and terminating nodes must be different. For example, originating node could be local-user and the terminating node must be local-network. If they are the same, a `Local SUPVY DL Failure` alarm condition is generated.

Procedure

Important! Failures in the SUPVY channel will cause `Express SUPVY DL` **and** `Local SUPVY DL Failures`**. Before attempting to clear** `Express SUPVY DL` **or** `Local SUPVY DL Failures`**, all other SUPVY channel failures in the sub-network must be cleared first.**

1 At the CIT, do the following:

1. Select **CONFIGURATION-Provision** command
2. Click on the appropriate bay where the desired SUPVY circuit pack is installed.
3. Click on the appropriate shelf.
4. Click on SUPVY circuit pack

5. Click on the appropriate Line.
6. Click on **Provision**

2 Are the Data Link parameters provisioned per the office records?

IF...	THEN...
YES	Continue with Step 7.
NO	Continue with Step 3.

3 From the office records, determine the correct Data Link provisioning parameters.

4 Provision the Data Link parameters to the correct parameter(s) per the office records and click the **Apply** button.

5 Wait up to 10 minutes for the SUPVY circuit pack to reboot.

6 At the CIT, click on the **FAULT-NE Condition List** to obtain a report. Is the same alarm condition(s) still listed?

IF...	THEN...
YES	Continue with Step 7.
NO	Continue with Step 21.

7 Initiate a Trouble Report to the next upstream Network Element and have them check for alarm conditions (`SUPVY circuit pack failure`, various `SUPVY channel failure` conditions, `Data Link (DL) failures`). Are there any alarm conditions at the upstream office?

IF...	THEN...
YES	Refer Trouble Report to that office. ***STOP! YOU HAVE COMPLETED THIS PROCEDURE***.
NO	Continue with Step 8.

8 Have the upstream Network Element remove the SUPVY circuit pack. For details, refer to "DLP-514: Remove and/or Install Circuit Pack" (14-30).

9 Have the upstream Network Element install a new SUPVY circuit pack with the same series number. For details, refer to "DLP-514: Remove and/or Install Circuit Pack" (14-30).

10 At the CIT, click on the **FAULT-NE Condition List** to obtain a report. Is the same alarm condition(s) still listed?

IF...	THEN...
YES	Continue with Step 11.
NO	Continue with Step 20.

11 Have the upstream Network Element remove the circuit pack installed in Step 9. For details, refer to "DLP-514: Remove and/or Install Circuit Pack" (14-30).

12 Have the upstream Network Element reinstall the original SUPVY circuit pack removed in Step 8. For details, refer to "DLP-514: Remove and/or Install Circuit Pack" (14-30).

13 At the Network Element with the original alarm condition, remove the appropriate shelf cover for the SUPVY circuit pack. For details, refer to "DLP-511: Install/Remove Shelf Cover" (14-19).

14 Remove the SUPVY circuit pack in the office with the original alarm condition. For details, refer to "DLP-514: Remove and/or Install Circuit Pack" (14-30).

15 Replace the SUPVY circuit pack. For details, refer to "DLP-514: Remove and/or Install Circuit Pack" (14-30).

16 At the CIT, click on the **FAULT-NE Condition List** to obtain a report. Is the same alarm condition(s) still listed?

IF...	THEN...
YES	Continue with Step 17.
NO	Continue with Step 20.

17 Remove the SUPVY circuit pack installed in Step 15. For details, refer to "DLP-514: Remove and/or Install Circuit Pack" (14-30).

18 Reinstall the original circuit pack removed in Step 14. For details, refer to "DLP-514: Remove and/or Install Circuit Pack" (14-30).

19 Contact the appropriate maintenance support organization for further technical assistance.

20 Baseline the replaced circuit pack(s). For details, refer to "DLP-529: Baseline Optical Parameters" (14-74)

21 Reinstall the shelf cover. For details, go to "DLP-511: Install/Remove Shelf Cover" (14-19).

END OF STEPS

□

TAP-193: Clear 'Invalid Primary DSA Address'

Overview

The network element provisioned to act as a Registration Manager can not build a valid address to the Primary Directory Service Agent (DSA) which is located at the Operations Support Center.

Procedure

1 At the CIT, select the **ADMINISTRATION-Data Communications menu**.

2 In the **ADMINISTRATION-Data Communications** dialog box, the **Network Layer** tab appears.

Important! Depending on records in SNMS and the system administrator, you may have to verify the primary address under the DSA NSAP tab as well.

3 Verify with the local office records or the system administrator at the operations support center if the same NSAP address and primary directory server agent address is correct. Also verify all secondary addresses, if required.

4 If changes are required, click on the **Modify** button for the appropriate field and enter the correct address information.

5 Click on **OK**. The changed information appears in the appropriate field of the dialog box.

6 Is the `Invalid Primary DSA Address` alarm condition still listed?

IF...	THEN...
YES	Continue with Step 7.
NO	***STOP! YOU HAVE COMPLETED THIS PROCEDURE***.

7 Initiate a Trouble Report to the responsible Operations Support Center or System Administrator stating an `Invalid Primary DSA Address` trouble condition is still being reported by this network element.

END OF STEPS

□

TAP-194: Clear ’RM Unreachable’

Overview

The `RM Unreachable` condition indicates a network element has waited five minutes and has not received a Registration Request Protocol (RRP) request from the Registration Manager. This condition could be caused by a provisioning change in the Registration Manager network element, an upstream BOS controller failure, or supervisory data link failure. As a result of this condition, SNMS (or other Element Management System) may not be able to communicate with the downstream networks elements.

Procedure

1 Determine from office records which network element is designated the ’Registration Manager’.

2 Initiate a login session with the network element identified in Step 1. A remote login session may fail depending on the state of the network element. Therefore, obtain local assistance at the Registration Manager network element to connect the CIT at that location.

3 At the CIT, click on the **FAULT-NE Condition List** to obtain the alarms/conditions at the network element.

4 Is there a `BOS-OHCTL` failure listed?

IF...	THEN...
YES	Go to Step 5.
NO	Continue with Step 7.

5 At the CIT, select **FAULT-Reset** and in the Reset Dialog box select **System** and click the **OK** button to reset the network element.

6 If SNMS (or other Element Management System) can communicate with all of the downstream network elements, then the `RM Unreachable` condition has been cleared. If not proceed to Step 7.

7 At the CIT select **ADMINISTRATION-Data Communications-DSA OSI Stack Selector**.

8 If the network element(s) identified in Step 1 are not provisioned as Registration Manager proceed to Step 9. Otherwise, proceed to Step 10.

9 In the DSA OSI Stack Selector dialog box, provision the Registration Manager to **Enabled**.

10 Determine from office records the correct Primary and Secondary DSA network addresses, Primary and Secondary TSB network addresses, and Directory Name Prefix. If the preceding information is incorrect, continue to Step 11. If the information is correct, proceed to Step 13.

11 At the CIT, **select ADMINSTRATION-Data Communications-DSA NSAP** and provision the Primary and Secondary DSA network addresses. From the Data Communications window, select the **TSB** tab and provision the Primary and Secondary TSB network addresses. From the Data Communications window, select the DSA **Name Prefix** tab and provision the DSA Name Prefix.

12 If SNMS (or other Element Management System) can communicate with all of the downstream network elements, then the `RM Unreachable` condition has been cleared. If the EMS still cannot communicate with the downstream network elements, proceed to Step 13.

13 At the CIT, click on the **FAULT-NE Condition List** to obtain the alarms/conditions at the network element.

14 If there are supervisory and/or optical line conditions listed, refer to ″TAP-110: Address Incoming Signal Failure″ (13-23), ″TAP-178: Clear SUPVY Add Input LOS″ (13-116), ″TAP-181: Clear ’SUPVY

Drop Output LOS’″ (13-124), and ″TAP-192: Clear ’Local SUPVY DL Failure,’ ’Express SUPVY DL Failure, or ’PROVDLTYPE Mismatch’″ (13-146) of this manual. If not, proceed to Step 16.

15 If SNMS (or other Element Management System) can communicate with all of the downstream network elements, then the `RM Unreachable` condition has been cleared. If the EMS still cannot communicate with the downstream network elements, proceed to Step 16

16 Determine from office records the correct IP address for the network elements which are designated as the Primary and Secondary transport bridges. Establish a login session with those network elements (the network element which is designated the Registration Manager is not necessarily the transport bridge) if one does not already exist. At the CIT select **ADMINISTRATION-Data Communications-TCP/IP**. If the IP addresses of the transport bridges are not provisioned continue to Step 17. Otherwise, proceed to Step 19

17 In the ADMINISTRATION-Data Communications-TCP/IP dialog box, enter the predetermined IP addresses for the network elements designated as the Primary and Secondary transport bridges.

18 If SNMS (or other Element Management System) can communicate with all of the downstream network elements, then the `RM Unreachable` condition has been cleared. If the EMS still cannot communicate with the downstream network elements, proceed to Step 19.

Important! Use the following steps for troubleshooting the `RM Unreachable` **condition in network elements downstream of the Registration Manager network element.**

19 Identify all networks which are not communicating with SNMS (or other Element Management System).

20 Initiate a login session with the network element identified in Step 19. A remote login session may fail depending on the state of the network element. Therefore, obtain local assistance at the network element to connect the CIT at that location. For details, refer to ″DLP-518: Initiate or Terminate Login Session to a Network Element Using WaveStar® OLS 1.6T CIT″ (14-43).

21 At the CIT, click on the **FAULT-NE Condition List** to obtain the alarms/conditions at the network element.

22 If there is a `BOS-OHCTL failure` (or BOS-SYSCTL for repeaters) listed, continue to Step 23. If not, proceed to Step 25.

23 At the CIT, select **FAULT-Reset** and in the Reset Dialog box select **System** and click the **OK** button to reset the network element.

24 If SNMS (or other Element Management System) can communicate with all of the downstream network elements, then the `RM Unreachable` condition has been cleared. If not proceed to Step 25.

25 The network element identified in Step 19 should not be provisioned as Registration Manager. At the CIT select **ADMINISTRATION-Data Communications-DSA OSI Stack Selector**, verify the Registration Manager is disabled. If the network element is provisioned as a Registration Manager continue to Step 26. If not, proceed to Step 28

Important! When the Registration Manager is disabled, the BOS Bay Controller will reboot. Topology construction alarms will appear.

26 From the DSA OSI Stack Selector dialog box, provision the Registration Manager to **Disabled**.

27 If SNMS (or other Element Management System) can communicate with all of the downstream network elements, then the `RM Unreachable` condition has been cleared. If the EMS still cannot

communicate with the downstream network elements, proceed to Step 28.

28 At the CIT, click on the **FAULT-NE Condition List** to obtain the alarms/conditions at the network element. If there is are supervisory and/or optical line conditions listed, refer to ″TAP-110: Address Incoming Signal Failure″ (13-23), ″TAP-178: Clear SUPVY Add Input LOS″ (13-116), ″TAP-181: Clear ’SUPVY Drop Output LOS’″ (13-124), and ″TAP-192: Clear ’Local SUPVY DL Failure,’ ’Express SUPVY DL Failure, or ’PROVDLTYPE Mismatch’″ (13-146) of this manual.

29 If SNMS (or other Element Management System) can communicate with all of the downstream network elements, then the `RM Unreachable` condition has been cleared. If the EMS still cannot communicate with other downstream network elements, repeat Step 19 through Step 28 until all downstream network elements are communicating with the Element Management System. If the Element Management System cannot communicate with the network elements upon completion of this procedure, consult Lucent Technologies Technical Support.

END OF STEPS

□

TAP-195 Clear ’DSA Unreachable’

Overview

The network element has been unsuccessful in an attempt to register with a Directory Service Agent (DSA) using the date provided by a Registration Manager via a Registration Request Protocol (RRP) request.

Procedure

1 Remove the appropriate shelf cover. All connections can be accessed from the front. For details, see ″DLP-511: Install/Remove Shelf Cover″ .

2 Make an inspection of the Operation Support (OS) RJ45 cable connected to the J32 OS connector at the interconnect panel. Verify that the RJ45 cable is properly seated in the RJ32 connector and adapter.

3 Is the RJ45 cable connected properly to the J32 (OS) jack and adapter in Step 2?

IF...	THEN...
YES	Continue with Step 4.
NO	Connect the RJ45 cable and continue with Step 4.

4 At the CIT, select **FAULT-NE Condition List** to obtain a report.

5 Referring to the report obtained in Step 4, is the `DSA Unreachable` alarm condition still present?

IF...	THEN...
YES	Continue with Step 6.
NO	***STOP! YOU HAVE COMPLETED THIS PROCEDURE***.

6 Reinstall the shelf cover. For details, go to "DLP-511: Install/Remove Shelf Cover".

Important! The Network Element provisioned to act as the Registration Manager can not build a valid address to the Primary Directory Service Agent (DSA).

7 At the CIT, select the **ADMINISTRATION-Data Communications** menu.

8 In the **ADMINISTRATION-Data Communications** dialog box, the Network Layer tab appears.

Important! Depending on records in SNMS and the system administrator, you may have to verify the primary address under the DSA NSAP tab as well.

9 Verify with local office records or the system administrator at the Operations Support center if the NSAP address and primary directory server agent address is correct˙ Also, verify all secondary addresses if required.

10 If changes are required, click **Modify** for the appropriate field and enter the correct address information.

11 Click **OK**. The changed information appears in the appropriate field of the dialog box.

12 At the CIT, click on **FAULT-NE Condition List** to obtain another report.

13 Is the `DSA Unreachable` alarm condition still listed?

IF...	THEN...
YES	Continue with Step 14.

IF...	THEN...
NO	***STOP! YOU HAVE COMPLETED THIS PROCEDURE.***

14 Initiate a Trouble Report to the responsible Operations Support Center or System Administrator stating a `DSA Unreachable` alarm condition is still being reported by this network element.

END OF STEPS

TAP-197: Clear 'WaveWrapper Path Trace Mismatch'

Overview

This procedure is used to clear the WaveWrapper Path Trace Mismatch condition. The WaveStar® OLS 1.6T reads the optical channel path trace byte (0J3) in the optical channel overhead. This condition indicates that the incoming optical channel path trace message trace does not match the expected incoming optical channel path trace message trace.

Procedure

1 At the CIT, select **FAULT-Analysis-Optical Channel Path Trace** and select appropriate bay shelf and OTU port to obtain a report.

2 Determine from the local office records what is the correct expected received OCH path trace message for this OC-192.

3 Do the office records for the expected incoming optical channel path trace message match the data in the expected incoming optical channel path trace message listed in the report from Step 1?

IF...	THEN...
YES	Continue with Step 4.
NO	Continue with Step 11.

4 At the CIT, click on the **FAULT-NE Condition List** to obtain an updated report.

CAUTION

SERVICE AFFECTING *- Step 5 could result in service interruption.*

5 Trace the fiber jumper connected to the IN port of the OTU (OTU30, OTU31, or OTUD30), identified in the AID column, back to the source.

6 Do the office records indicate that the fiber jumper is connected to the correct source?

IF...	THEN...
YES	Continue with Step 14.
NO	Continue with Step 7.

CAUTION

SERVICE AFFECTING *- Step 7 could result in service interruption.*

7 Using local procedures connect the fiber jumper to the correct source.

8 At the CIT, click on the **FAULT-NE Condition List** to obtain an updated report.

9 Is the `WaveWrapper Path Trace Mismatch` condition still present?

IF...	THEN...
YES	Continue with Step 14.
NO	Continue with Step 10.

10 ***STOP! YOU HAVE COMPLETED THIS PROCEDURE.***

11 At the CIT, select **FAULT-Analysis-Optical Channel Path Trace** and enter the correct expected incoming optical channel path trace message.

12 At the CIT, click on the **FAULT-NE Condition List** to obtain an updated report.

13 Is the `WaveWrapper Path Trace Mismatch` condition still present?

IF...	THEN...
YES	Go to "TAP-108: Address Missing or Incorrect Response" (13-20).
NO	***STOP! YOU HAVE COMPLETED THIS PROCEDURE***.

Important! At this point, it appears that the local network element is operating correctly.

14 Initiate a Trouble Report to the upstream network element of the line indicating the `WaveWrapper Path Trace Mismatch`.

END OF STEPS

□

TAP-202: Clear 'WAD Add LOS'

Overview

The power detector at the ADD IN port of this WAD circuit pack has detected a loss of signal.

Procedure

1 At the CIT, click on the **FAULT-NE Condition List** to obtain a report.

2 Identify the circuit pack associated with this failure condition; use the AID column from the report in Step 1.

3 Remove the appropriate shelf cover. For details, refer to "DLP-511: Install/Remove Shelf Cover" (14-19).

4 Identify the upstream circuit pack to which this WAD ADD IN Port is connected. Use the bay, shelf, slot, ADD_IN port listed in the AID column of the report for this WAD circuit pack and the fiber routing information found in the Fiber Management for WAD Terminals section of the *WaveStar® OLS 1.6T Installation Manual*, (365-575-790).

CAUTION

SERVICE AFFECTING *- Step 5 could result in service interruption*

5 Visually inspect the fiber jumper connected to the ADD IN port of the WAD circuit pack and the upstream circuit pack identified in Step 4. For details, refer to "DLP-510: Inspect and Clean Optical Fiber Connectors" (14-12).

6 Did the visual inspection result in correcting any problems?

IF...	THEN...
YES	Continue with Step 7.
NO	Continue with Step 8.

7 Obtain another **FAULT-NE Condition List** report (refer to Step 1). Is the `WAD ADD LOS` failure condition still listed?

IF...	THEN...
YES	Continue with Step 8.
NO	Continue with Step 19.

8 Replace the fiber jumper between the upstream circuit pack and the WAD ADD IN port reporting the failure condition. For details, go to "DLP-510: Inspect and Clean Optical Fiber Connectors" (14-12).

9 Obtain another **FAULT-NE Condition List** report (refer to Step 1). Is the `WAD ADD LOS` failure condition still listed?

IF...	THEN...
YES	Continue with Step 10.
NO	Continue with Step 19.

10 Replace the upstream circuit pack identified in Step 4. For details, go to "DLP-514: Remove and/or Install Circuit Pack" (14-30).

11 Obtain another **FAULT-NE Condition List** report (refer to Step 1). Is the `WAD ADD LOS` failure condition still listed?

IF...	THEN...
YES	Continue with Step 12.
NO	Continue with Step 19.

12 Remove the replacement circuit pack (installed in Step 10) and install the original circuit pack. For details, go to "DLP-514: Remove and/or Install Circuit Pack" (14-30).

13 Obtain another **FAULT-NE Condition List** report (refer to Step 1). Is the `WAD ADD LOS` failure condition still listed?

IF...	THEN...
YES	Continue with Step 14.
NO	Continue with Step 19.

14 Replace the WAD circuit pack identified with this failure condition in Step 1. For details, go to "DLP-514: Remove and/or Install Circuit Pack" (14-30).

15 Obtain another **FAULT-NE Condition List** report (refer to Step 1). Is the `WAD ADD LOS` failure condition still listed?

IF...	THEN...
YES	Continue with Step 16.
NO	Continue with Step 19.

16 Remove the replacement circuit pack (installed in Step 14) and install the original circuit pack. For details, go to "DLP-514: Remove and/or Install Circuit Pack" (14-30).

17 Contact the appropriate maintenance support organization for further technical assistance.

18 STOP! YOU HAVE COMPLETED THIS PROCEDURE.

19 Reinstall the shelf cover. For details, refer to "DLP-511: Install/Remove Shelf Cover" (14-19).

20 Is the CR/PROMPT, MJ/DEFERRED or MN LED lighted on the EI circuit pack/User Panel.

IF...	THEN...
YES	Refer to ″TAP-102: Clear CR/PROMPT, MJ/DEFERRED, MN LED, or TCA″ (13-5)
NO	STOP! YOU HAVE COMPLETED THIS PROCEDURE.

END OF STEPS

□

TAP-207: Clear 'Unexpected Channel'

Overview

If a fiber connection is made, and a signal is applied, between external equipment and an OMU or a WAD without an External ADD association, an `Unexpected Channel` alarm condition will be raised at that node. The alarm condition will be cleared when the External ADD association is created for that fiber connection, or when the signal is removed from the fiber.

Procedure

1 At the CIT, click on the **FAULT-NE Condition List** to obtain an updated report.

2 Using the channel designator in the AID column, determine from the local office records if an association should be made to the external equipment or if a signal should be removed from the fiber connected to the OMU or WAD port.

3 Make the proper association using the Circuit Connection Configuration Wizard or signal correction per local office records.

4 Did the alarm clear?

IF...	THEN...
YES	***STOP! YOU HAVE COMPLETED THIS PROCEDURE***.
NO	Contact the appropriate maintenance support organization for further technical assistance.

END OF STEPS

□

TAP-210: Clear ’Optical Channel Transmit Failure’

Overview

This condition indicates that the OMON circuit pack has detected a loss of an optical channel incoming to the transmit OA circuit pack.

Procedure

1 At the CIT, click on the **FAULT-NE Condition List** to obtain a report.

2 Are all optical channels indicating an optical channel transmit failure?

IF...	THEN...
YES	Proceed to ″TAP-212: Clear ’DCM Failure’ and/or Isolate Defective DCM Connections″ (13-176).
NO	Continue with Step 3.

3 Using the AID column from the report (Step 1) identify the port label number associated with the condition (for example, it is 9190 for OCHAN-1E-9190).

4 From the menu, select the **REPORTS-Port Association** List.

5 In the Equipment Explorer dialog box, click on Bay 1.

6 Click on **Select**.

7 Using the port label number obtained in Step 3 (9190) and the information in the source port AID column of the report (for example, port-1-1-1-OUTA_9190 and port 1-3-5-9190), determine the slot and port location of the OTU and the OMU/WAD circuit pack. If the port label is not found in the source port AID column, repeat Step 5 through Step 7 for Bay 2.

8 Remove the appropriate shelf cover from the front. For details, refer to ″DLP-511: Install/Remove Shelf Cover″ (14-19).

CAUTION

SERVICE AFFECTING *- Step 9 could result in service interruption*

9 Visually inspect the incoming signal cable between the OTU OUT port connector and the OMU/WAD IN () port connector and correct any problems found. For details, refer to ″DLP-517: Inspect Optical Fiber(s)″ (14-42).

10 Did the visual inspection result in correcting any problems?

IF...	THEN...
YES	Continue with Step 11.
NO	Continue with Step 12.

11 Obtain another **FAULT-NE Condition List** report (refer to Step 1). Is the optical channel transmit failure still listed?

IF...	THEN...
YES	Continue with Step 12.
NO	Continue with Step 30.

12 Using the information from the report (Step 7) identify the OTU and OTU OUT() fiber connected to the OMU/WAD IN() port associated with the alarm condition.

CAUTION

SERVICE AFFECTING - Failure to follow the instructions in Step 14 could result in service interruptions.

13 Notify the person responsible for the optical line or channel associated with the service or protection signals assigned to this OTU to:

- Manually switch the service line or channel to a protection line
- Ensure the protection line or channel assigned to this OTU is not being used for service

14 Remove and clean the fiber identified in Step 12 at the OMU/WAD IN port. For details, go to "DLP-510: Inspect and Clean Optical Fiber Connectors" (14-12).

15 Connect an optical power meter to the fiber cleaned in Step 14 and obtain power measurement.

RESULT: The power should be -5 dBm +/-0.5 dBm.

16 Was the optical power measurement within the limits?

IF...	THEN...
YES	Continue with Step 23.
NO	Continue with Step 17.

17 Is LBO installed on the OTU?

IF...	THEN...
YES	Continue with Step 18.
NO	Continue with Step 20.

18 Select a new LBO with the same dB value, clean and replace existing LBO in the OUT port of the OTU.

19 Obtain another report (refer to Step 1). Is the `Optical Channel Transmit` still listed?

IF...	THEN...
YES	Continue with Step 20.

IF...	THEN...
NO	Continue with Step 29.

20 Replace the OTU circuit pack identified in Step 12. For details, refer to ″DLP-514: Remove and/or Install Circuit Pack″ (14-30).

21 Obtain another report (refer to Step 1). Is the same alarm condition still listed?

IF...	THEN...
YES	Continue with Step 22.
NO	Continue with Step 29.

22 Remove the replacement circuit pack (installed in Step 20) and reinstall the original circuit pack. For details, refer to ″DLP-514: Remove and/or Install Circuit Pack″ (14-30).

Important! At this point, suspect the OMU/WAD is defective.

CAUTION

Failure to follow instructions in this step could result in service interruptions. Contact the appropriate maintenance support organization for further technical assistance if required.

23 Notify the person responsible for the optical line or channel associated with the service or protection signals assigned to this OMU/WAD to:

- Manually switch the service line or channel to a protection line
- Ensure the protection line or channel assigned to this OMU/WAD is not being used for service

24 Replace the OMU/WAD pack identified in Step 7 For details, refer to ″DLP-514: Remove and/or Install Circuit Pack″ (14-30).

25 Obtain another report (refer to Step 1). Is the same `Optical Channel Transmit` failure listed?

IF...	THEN...
YES	Continue with Step 26.
NO	Continue with Step 28.

26 Contact the appropriate maintenance support organization for further technical assistance.

27 ***STOP! YOU HAVE COMPLETED THIS PROCEDURE.***

28 Notify the person responsible for the optical line or channel associated with the service or protection signals assigned to this OMU/OTU/WAD that the optical channel or optical line can now be returned to service.

29 Baseline the replaced circuit pack. For details, refer to "DLP-529: Baseline Optical Parameters" (14-74).

30 Reinstall the shelf cover. For details, refer to "DLP-511: Install/Remove Shelf Cover" (14-19).

31 STOP! YOU HAVE COMPLETED THIS PROCEDURE.

END OF STEPS

□

TAP-211: Clear ’Clamping Transmit OA to Output O-Channel Power’

Overview

This condition indicates that the transmit (toward the line) OA output power is reduced by a minimum of 10 dB from the normal output power of the transmit OA for this span. This clamping condition on the transmit OA is normally implemented by the installation personnel or the appropriate maintenance organization to create a safe OA output power to measure span loss or debugging a system that is not yet carrying service or the `Clamping Transmit OA to Output O-Channel Power` state has a higher priority regardless if there is an APSD condition active or not.

CAUTION

SERVICE AFFECTING - The CIT command that created this `Clamping Transmit OA to Output O-channel Power` *alarm condition should only be performed during installation of a new system or when service on the working system has been rerouted.*

Important! Please ignore the `Clamping Transmit OA to Output O-channel Power` **where there is an “OA Removed Standing Condition.”**

Procedure

To determine the cause of the transmission errors:

1. At the CIT, click on the **FAULT-NE Condition List** to obtain a report.

2. Using the AID and Description columns from the report, identify the appropriate **transmit** OA associated with the clamping alarm condition.

3. Consult the on-site installation or maintenance personnel or the operations center to determine why clamping of the **transmit** OA was implemented for this location.

4 Should the OA output be clamped?

IF...	THEN...
YES	STOP! YOU HAVE COMPLETED THIS PROCEDURE. This network element installation personnel, maintenance personnel or the alarm center should be aware of this activity.
NO	Continue with Step 5.

5 At the CIT, click on **CONFIGURATION-Provision**.

6 Click on the bay where the **transmit** OA is located, identified in Step 2

7 Click on the shelf where the **transmit** OA is located, identified in Step 2.

8 Click on the optical line associated with the **transmit** OA circuit pack identified in Step 2.

9 Click on the **Provision** button.

10 Select **OFF** for the clamping to be removed.

11 Click on the **Apply** button.

12 At the CIT, click on the **FAULT-NE Condition List** to obtain another report.

13 Is the same alarm condition still listed under the Description column of the report?

IF...	THEN...
YES	Consult the appropriate installation or maintenance support organization for technical assistance.
NO	Continue with Step 14.

Important! Once the transmit OA is cleared of the **Clamping Transmit OA to Output O-Channel Power**alarm condition, a manual trigger of APSD (by disconnecting fiber) and then restore fiber is required to bring the transmit OA to normal operational mode. The system needs a hard trigger to perform the OA-to-OA mismatch check.

14 Using the AID and Description columns from the report in Step 2, identify the **transmit** OA circuit pack associated with the original clamping alarm condition.

15 Temporarily remove the fiber from the IN port of the **transmit** OA listed in the AID column from Step 2.

16 At the CIT, click on the **FAULT-NE Condition List** to obtain another report.

17 Is an `APSD Active-Line` listed under the Description column of the report.

IF...	THEN...
YES	Continue with Step 18.
NO	Consult the appropriate installation or maintenance support organization for technical assistance.

18 Reconnect the fiber removed in Step 15 to the IN port of the **transmit** OA.

19 At the CIT, click on the **FAULT-NE Condition List** to obtain another report.

20 Is an `APSD Active-Line` listed under the Description column of the report.

IF...	THEN...
YES	Consult the appropriate installation or maintenance support organization for technical assistance.
NO	Continue with Step 21.

21 STOP! YOU HAVE COMPLETED THIS PROCEDURE.

END OF STEPS

□

TAP-212: Clear 'DCM Failure' and/or Isolate Defective DCM Connections

Overview

Defective DCM connections can cause transmission errors on multiple channels or loss of signal (LOS) at the DCM-In port of the OA.

Important! When clearing a `DCM Failure` alarm condition, the DCM apparatus unit has no LED. If the cause of the `DCM Failure` alarm condition is a bad DCM fiber jumper, bad LBO, or failed DCM apparatus unit for the DCM IN/OUT port of an OA, then the fault LED of the OA associated with the DCM failure will flash. The NE Alarm List AID column will identify the OA and the DCM IN port.

Use the following procedure to isolate defective DCM connections.

Determine Appropriate Section

Are you working on Transmission Errors or DCM Failures?

IF...	THEN...
Transmission Errors	Continue with Step 1 of the section ***Transmission Errors*** later in this procedure.
DCM Failures/Multiple Optical Channel Transmit Failures	Continue with Step 1 of the section ***DCM Failures*** later in this procedure.

Transmission Errors

Follow these steps to determine the cause of the transmission errors:

Important! End-to-end communication must be operational to perform this procedure.

1 Remotely log on to the head-end WaveStar® OLS 1.6T node of the line on which the errors are occurring. For details, go to DLP-518: Initiate or Terminate Login Session to a Network Element Using WaveStar® OLS 1.6T CIT (10-44).

2 Are more than 8 channels are installed on this line?

IF...	THEN...
YES	Proceed to Step 5
NO	Proceed to Step 3.

3 Contact your next level of technical support.

4 ***STOP! YOU HAVE COMPLETED THIS PROCEDURE!***

5 Use the **VIEW-Equipment Details** command, then select bay, shelf, OA and optical line to read Tilt_Error for the suspected Oline.

6 Is the Tilt_Error is greater than +2 or less than -2

IF...	THEN...
YES	Then we conclude that there is a problem at this node. Travel to the identified node and proceed with Step 9 to clear the problem.
NO	Continue with Step 7.

7 Remotely log on to the next downstream WaveStar® OLS 1.6T node and repeat Step 5 and Step 6 until all nodes have been queried. For details, go to DLP-518: Initiate or Terminate Login Session to a Network Element Using WaveStar® OLS 1.6T CIT (10-44). If unable to locate a node with an out-of-range reading, consult the appropriate installation or maintenance support organization for technical assistance.

8 ***STOP! YOU HAVE COMPLETED THIS PROCEDURE!***

CAUTION

SERVICE AFFECTING: The following steps will cause interruption of traffic.

9 Disconnect the fiber at the DCM-Out port of the OA.

10 Remove the LBO at the DCM-Out port and replace it with a 0-dB LBO

- Measure the power at the DCM-Out port
- Record this power as DCM_OUT
- Re-insert the original LBO at the DCM-Out port.

11 Clean the fiber and reconnect it to the DCM-Out port.

12 Disconnect the fiber at the DCM-In port

- Measure the power at the output of the this fiber (that was connected to the DCM-In port)
- Record this power as DCM_IN.

13 Clean the fiber and reconnect it to the DCM In port of the OA.

14 Calculate the measured DCM_LOS = DCM_OUT - DCM_IN.

IF...	THEN...
DCM_LOS is less than or equal to 10 dB	Continue with Step 15.
DCM_LOS is greater than 10 dB	Continue with Step 16.

15 If DCM_LOS is less than or equal to 10 dB and the transmission errors have not stopped:

- Then replace the OA circuit pack by following the OA installation procedure DLP-514: Remove and/or Install Circuit Pack (10-30)
- If transmission errors persist, contact the appropriate maintenance support organization for technical assistance.
- ***STOP! YOU HAVE COMPLETED THIS PROCEDURE!***

16 If the DCM_LOS is greater than 10 dB, then the conclusion is there is a problem with the DCM connections at this node

- Clean the fibers and replace the LBO on the DCM_OUT port with an LBO of equal value
- Re-measure DCM_LOS and repeat Step 9 to Step 14.

17 If DCM_LOS is still greater than 10 dB

- Replace the fibers that connect the DCM to the OA
- Re-measure DCM_LOS and repeat Step 9 to Step 14.

18 If DCM_LOS is still greater than 10 dB

- Replace the DCM. For details refer to DLP-514: Remove and/or Install Circuit Pack (10-30).
- Install a new LBO by following the DCM LBO installation procedure. Refer to DLP-530: DCM LBO Procedure (10-88) for detailed procedures.
- If transmission errors persist, contact the appropriate maintenance support organization for technical assistance.
- ***STOP! YOU HAVE COMPLETED THIS PROCEDURE!***

END OF STEPS

DCM Failure

Follow these steps to determine the cause of the LOS at the DCM-In Port of the OA:

CAUTION

SERVICE AFFECTING - The following steps will cause interruption of traffic.

1 Disconnect the fiber at the DCM-Out port of the OA.

2 Remove the LBO at the DCM-Out port and replace it with a 0-dB LBO

- Measure the power at the DCM-Out port
- Record this power as DCM_OUT
- Re-insert the original LBO at the DCM-Out port.

3 Clean the fiber and reconnect it to the DCM-Out port.

4 Disconnect the fiber at the DCM-In port

- Measure the power at the output of the this fiber (that was connected to the DCM-In port)
- Record this power as DCM_IN.

5 Clean the fiber and reconnect it to the DCM In port of the OA.

6 Determine the measured DCM_LOS = DCM_OUT - DCM_IN.

7 If DCM_LOS is less than or equal to 10 dB and the transmission errors have not stopped:

- Then replace the OA circuit pack by following the OA installation procedure DLP-514: Remove and/or Install Circuit Pack (10-30).
- If alarm persists for more than 30 minutes, contact the appropriate maintenance support organization for technical assistance.
- STOP! YOU HAVE COMPLETED THIS PROCEDURE!

8 If the DCM_LOS is greater than 10 dB, then the conclusion is there is a problem with the DCM connections:

- Clean the fibers and replace the LBO on the DCM_OUT port with an LBO of equal value
- Re-measure DCM_LOS; and repeat Step1 to Step 6.

9 If DCM_LOS is still greater than 10 dB:

- Replace the fibers that connect the DCM to the OA
- Re-measure DCM_LOS, and repeat Step 1 to Step 6.

10 If DCM_LOS is still greater than 10 dB:

- Replace the DCM, for details refer to DLP-514: Remove and/or Install Circuit Pack (10-30)
- Install a new LBO in place of the original LBO in the DCM out port of the OA. Refer to DLP-530: DCM LBO Procedure (10-88) for detailed procedures.
- If alarm persists for more than 30 minutes, contact the appropriate maintenance support organization for technical assistance.
- ***STOP! YOU HAVE COMPLETED THIS PROCEDURE!***

END OF STEPS

□

TAP 213: Clear TCA Optics 'OLINE (TOPR-OL)'

Overview

The total optical receive power at the OA has either exceeded the high threshold or has dropped below the low threshold.

Make sure there are ***no*** standing alarms that can attribute to the TCA(s), for example, if there is an OCHAN TCA make sure that the corresponding upstream add OTU is not in alarm.

Make sure all TCAs have a default threshold value. With the exception of OPR and OPT, all TCAs can be user-provisioned.

If the TCA is occurring on more than one node associated with the same channel/wavelength, start the following trouble-clearing process at the first upstream node that is reporting the TCA. Fixing this node first may clear the TCA at the other downstream nodes.

Display the Default Threshold

The following is the procedure for displaying the default threshold:

1 Click on **PERFORMANCE-Provision Threshold**

2 Select the bay, shelf and slot/CP number

3 Click on **Line () (Optical Line)**

4 Click on **Select**

Important! It can take as much as 10 minutes for a TCA to activate or clear.

5 Before taking the recommended action that follows, please check the sensitivity of the current user-provisioned thresholds which can cause inadvertent activation of TCAs, and, as a result, may only require adjusting the current threshold value.

END OF STEPS

Recommended Action Follow these steps to clear the condition TCA Optics: ’OLINE (TOPR-OL).

CAUTION

SERVICE AFFECTING - Failure to follow instructions in Step 2 could result in service interruption.

1 Notify the person responsible for the optical line or channel associated with the service or protection signals assigned to this OA to perform one of the following actions:

1. Manually switch the service line or channel to a protection line
2. Ensure all protection lines or channels assigned to this OA are not being used for service
3. Restore service on a different Optical Line System or route.

2 If the TCA is occurring on all nodes, were channels added or deleted?

If...	Then...
Yes	Manually re-baseline each node. Refer to DLP-529: Baseline Optical Parameters (10-76). If problem persists, contact the appropriate maintenance support organization for technical assistance.
No	Continue with Step 3.

3 Measure span loss between the node that has the TCA and the upstream node. If span loss has changed per office records:

- Determine the reason
- Rectify the problem
- Manually re-baseline this node, if necessary. Refer to ″DLP-529: Baseline Optical Parameters″ .
- If problem persists contact the appropriate maintenance support organization for technical assistance.

4 Notify the person responsible for all affected service or protection signals assigned to this OA that this Optical Line can now be returned to service.

END OF STEPS

□

TAP 214: Clear TCA Optics 'OLINE (TOPT-OL)'

Overview

The total optical transmit power at the OA has either exceeded the high threshold or has dropped below the low threshold.

Ensure the following:

Make sure there are ***no*** standing alarms that can attribute to the TCA(s), for example, if there is an OCHAN TCA make sure that the corresponding upstream add OTU is not in alarm.

All TCAs have a default threshold value that was carefully chosen. With the exception of OPR and OPT, all TCAs can be user-provisioned.

If the TCA is occurring on more than one node associated with the same channel/wavelength, start the following trouble-clearing process at the first upstream node that is reporting the TCA. Fixing this node first may very well clear the TCA at the other downstream nodes.

Display the Default Threshold

The following is the procedure for displaying the default threshold:

1 Click on **PERFORMANCE-Provision Threshold**

2 Select the bay, shelf and slot/CP number

3 Click on **Line () (Optical Line)**

4 Click on **Select**.

Important! It can take as much as 10 minutes for a TCA to activate or clear.

5 Before taking the recommended action, check the sensitivity of the current user-provisioned thresholds that can cause inadvertent activation of TCAs, and, may only require adjusting the current threshold value.

END OF STEPS

Recommended Action Follow these steps to clear the condition `TCA Optics: OLINE (TOPT-OL)`:

CAUTION

SERVICE AFFECTING - Failure to follow instructions in Step 2 could result in service interruption.

1 Notify the person responsible for the optical line or channel associated with the service or protection signals assigned to this OA to perform one of the following actions:

1. Manually switch the service line or channel to a protection line
2. Ensure all protection lines assigned to this OA are not being used for service
3. Restore service on a different Optical Line System or route.

2 If power is per Table 7-11, Optical Amplifier Output Power for Channel Counts from 1 to 80 Channels (All OTU Types), in the Technical Specifications chapter of the *WaveStar® OLS 1.6T Applications Planning Guide*, (365-575-786), then

1. Manually re-baseline this node, and
2. If problem persists, escalate to next maintenance level.
3. STOP! YOU HAVE COMPLETED THIS PROCEDURE.

3 If power is ***not*** per Table 7-11, Optical Amplifier Output Power for Channel Counts from 1 to 80 Channels (All OTU Types), in the Technical Specifications chapter of the *WaveStar® OLS 1.6T Applications Planning Guide*, (365-575-786), then

1. Replace OMON and then OA.
2. If problem persists contact the appropriate maintenance support organization for technical assistance.
3. STOP! YOU HAVE COMPLETETED THIS PROCEDURE. Notify the person that is responsible for all affected service or protection signals assigned to this OA that this Optical Line can now be returned to service.

END OF STEPS

□

TAP-215: Clear ’TCA Optics OCHAN (SPR-C)’

Overview

The signal power received for a specific optical channel has either exceeded the high threshold or has dropped below the low threshold.

Ensure the following:

Make sure there are ***no*** standing alarms that can attribute to the TCA(s), for example, if there is an OCHAN TCA make sure that the corresponding upstream add OTU is not in alarm.

All TCAs have a default threshold value that was carefully chosen. With the exception of OPR and OPT, all TCAs can be user-provisioned.

If the TCA is occurring on more than one node associated with the same channel/wavelength, start the following trouble-clearing process at the first upstream node that is reporting the TCA. Fixing this node first may very well clear the TCA at the other downstream nodes.

Display the Default Threshold

The following is the procedure for displaying the default threshold:

1 Click on **PERFORMANCE-Provision Threshold**

2 Select the bay, shelf and slot/CP number.

3 Click on **OCHAN-( )e/w-( )**.

4 Click on **Select**.

Important! It can take as much as 10 minutes for a TCA to activate or clear.

5 Before taking the recommended action, check the sensitivity of the current user-provisioned thresholds that can cause inadvertent activation of TCAs, and only require adjusting the current threshold value.

END OF STEPS

Recommended Action for one or a few channels

Using the CIT, read the receive (OCHAN) power of the specified channel wavelength at the OA.

1 If the current value is per measurements in "DLP-524: Connect Optical Power Meter for Measurement at OTU () IN () Port" (14-49), manually baseline the specific channel. Refer to "DLP-529: Baseline Optical Parameters" (14-72).

1. If TCA does not clear within approximately 10 minutes, contact the appropriate maintenance support organization for technical assistance.
2. STOP! YOU HAVE COMPLETED THIS PROCEDURE.

CAUTION

SERVICE AFFECTING - Failure to follow instructions in Step 2 could result in service interruption.

2 Notify the person responsible for the optical line associated with the service or protection signals assigned to this OA to manually switch the service line to a protection line or ensure all protection lines assigned to this OA are not being used for service. Another option is to restore service on a different Optical Line System or route.

3 If the current value is per measurements in "DLP-528: LBO Application" (14-57), then

1. Using a power meter, disconnect the fiber and measure the power at the corresponding output port (including LBOs in the path) of the add OTU upstream.
   a. If the power is ***out of range*** per *WaveStar® OLS 1.6T Applications Planning Guide*, (365-575-786), Technical Specifications, replace the LBO at the output port and/or add OTU circuit pack.

NOTE: If the OTU circuit pack is replaced, manually baseline both ports. Refer to ″DLP-529: Baseline Optical Parameters″ (14-74).

b. If the power ***is*** per Table 7-11 of *WaveStar® OLS 1.6T Applications Planning Guide*, (365-575-786), Technical Specifications, continue with Step c.

c. Record the power of the OTU output port.

2. Disconnect the fiber from the input port associated with the OCHAN of OMU( ), connect it to a power meter and measure the power.

   a. If the result is not equal (may vary between 0.1 to 0.2 dB) to recorded value in Step 1c, replace the fiber.

   b. If the result is equal to recorded value in Step 1c, reconnect the fiber.

3. Connect a multi-wave meter to OUT 2 of the OMU1 and measure the OCHAN power is per ″DLP-528: LBO Applications″ (14-60)

   a. If the result is ***not*** per ″DLP-528: LBO Applications″ (14-60), determine the source of the problem, or contact the appropriate maintenance support organization for technical assistance.

   b. If the result ***is*** per ″DLP-528: LBO Applications″, continue.

4. Using the CIT, read the power associated with the channel at next (Repeater/WAD) node in the downstream path up to the adjacent node that has the TCA

   a. If the current value is ***outside*** the range per *WaveStar® OLS 1.6T Applications and Planning Guide*, (365-575-786), Technical Specifications, Table 7-11, determine the source of the problem, or contact the appropriate maintenance support organization for technical assistance.

   b. If the current value ***is*** per *WaveStar® OLS 1.6T Applications and Planning Guide*, (365-575-786), Technical Specifications, go to the next node and repeat Step 4.

4 If after all the nodes are checked and problem persists, contact the appropriate maintenance support organization for technical assistance.

5 Notify the person responsible for all affected service or protection signals assigned to this OA that the Optical Line can now be returned to service.

6 STOP! YOU HAVE COMPLETE THIS PROCEDURE.

END OF STEPS

For many or all channels:

Important! This indicates that a common circuit pack - OMON - is failed.

CAUTION

SERVICE AFFECTING - Failure to follow instructions in Step 2 could result in service interruption.

1 Notify the person responsible for the optical line associated with the service or protection signals assigned to this OA to manually switch the service line to a protection line or ensure all protection lines assigned to this OA are not being used for service. Another option is to restore service on a different Optical Line System or route.

2 Replace the OMON circuit pack. An auto-baseline of all the channels at that node occurs because of the new init map when the circuit connection is made only.

3 Allow the circuit pack to reboot.

4 If problem persists, contact the appropriate maintenance support organization for technical assistance.

5 Notify the person responsible for all affected service or protection signals assigned to this OA that this Optical Line can now be returned to service.

END OF STEPS

□

TAP-216: Clear ’TCA Optics: OCHAN (SPT-C)’

Overview

The transmit signal power for a specific optical channel has either exceeded the high threshold or has dropped below the low threshold.

Ensure the following:

Make sure there are ***no*** standing alarms that can attribute to the TCA(s), for example, if there is an OCHAN TCA make sure that the corresponding upstream add OTU is not in alarm. All TCAs have a default threshold value that was carefully chosen. With the exception of OPR and OPT, all TCAs can be user-provisioned.

If the TCA is occurring on more than one node associated with the same channel/wavelength, start the following trouble-clearing process at the first upstream node that is reporting the TCA. Fixing this node first may very well clear the TCA at the other downstream nodes.

Display the Default Threshold

The following is the procedure for displaying the default threshold:

1 Click on **PERFORMANCE-Provision Threshold**

2 Select the bay, shelf and slot/CP number

3 Click on **OCHAN-( )e/w-( )**.

4 Click on **Select**.

Important! It can take as much as 10 minutes for a TCA to activate or clear.

5 Before taking the recommended action, please check the sensitivity of the current user-provisioned thresholds which can cause inadvertent activation of TCAs, and, as a result, may only require adjusting the current threshold value.

END OF STEPS

Recommended Action

CAUTION

SERVICE AFFECTING - Failure to follow instructions in Step 2 could result in service interruption.

1 Notify the person responsible for the optical line associated with the service or protection signals assigned to this OA to manually switch the service line to a protection line or ensure all protection lines assigned to this OA are not being used for service. Another option is to restore service on a different Optical Line System or route.

2 If the power is per *WaveStar® OLS 1.6T Applications Planning Guide*, (365-575-786), Technical Specifications, then

1. Manually re-baseline the OCHAN. Refer to "DLP-529: Baseline Optical Parameters" (14-74)
2. If problem persists, contact the appropriate maintenance support organization for technical assistance
3. STOP! YOU HAVE COMPLETED THIS PROCEDURE.

3 If the power is not per Table 7-11 of *WaveStar® OLS 1.6T Applications Planning Guide*, (365-575-786), Technical Specifications:

1. Determine the problem, rectify and manually re-baseline, Refer to "DLP-529: Baseline Optical Parameters" (14-74).
2. If problem persists, contact the appropriate maintenance support organization for technical assistance.

4 Notify the person responsible for all affected service or protection signals assigned to this OA that this Optical Line can now be returned to service.

END OF STEPS

□

TAP-217: Clear ’TCA Optics: OLINE (PLE-RPx) {x=1-6}’

Overview

It is an indication of the level of performance of the receive OA six pump lasers. This is a measure of aging. This is an indication that the user provisioned threshold for EOL has been crossed.

Display the Default Threshold

The following is the procedure for displaying the default threshold:

1. Click on **PERFORMANCE-Provision Threshold**
2. Select the bay, shelf and slot/CP number
3. Click on **Line () (Optical Line)**
4. Click on **Select**.

   Important! It can take as much as 10 minutes for a TCA to activate or clear.
5. In the Set Threshold Optical Line dialog box, click on **Rx Laser Efficiency Tab**.
6. Click on **OK**

   Important! The default value is 0.80; all values entered must be a 3-character string, i.e., 0.50, 1.50, etc.
7. Before taking the recommended action, please check the sensitivity of the current user-provisioned thresholds that can cause inadvertent activation of TCAs, and, as a result, may require adjusting the current threshold value.

END OF STEPS

Recommended Action

CAUTION

SERVICE AFFECTING - Failure to follow instructions in Step 2 could result in service interruption.

1 Notify the person responsible for the optical line or channel associated with the service or protection signals assigned to this OA to manually switch the service line or channel to a protection line or ensure all protection lines or channels assigned to this OA are not being used for service. Another option is to restore service on a different Optical Line System or route.

2 Determine which OA to replace.

3 Using the AID and Description columns from the report in Step 1, identify the circuit pack (use the line identifier, for example, Line 1E) associated with this incoming failure condition.

Important! The circuit pack identified in the AID column can be located in *WaveStar® OLS 1.6T Applications Planning Guide*, (365-575-786), Bay Configurations.

4 Remove the shelf cover. For help, refer to ″DLP-511: Install/Remove Shelf Cover″.

5 Replace the OA circuit pack identified in Step 2. For help, refer to ″DLP-514: Remove and/or Install Circuit Pack″.

6 Retrieve a **FAULT-NE Condition List**.

7 Did the alarm clear?

IF...	THEN...
YES	Continue with Step 8.

IF...	THEN...
NO	Continue with Step 9.

8 Baseline the replaced circuit pack. For details, refer to "DLP-529: Baseline Optical Parameters" (14-74).

9 Replace the shelf cover. For help, refer to "DLP-511: Install/Remove Shelf Cover" (14-19).

10 Did the alarm clear?

IF...	THEN...
YES	Notify the person responsible for all affected service or protection signals assigned to this OA that this Optical Line can now be returned to service..
NO	Contact the appropriate maintenance support organization for technical assistance.

END OF STEPS

□

TAP-218: Clear 'TCA Optics: OLINE (PLE-TPx) {x=1-6}'

Overview

This indicates the level of performance of the transmit OA six pump lasers. This measures aging and indicates that the user provisioned threshold for End of Life (EOL) has been crossed.

Display the Default Threshold

The following is the procedure for displaying the default threshold:

1. Select **PERFORMANCE- Provision Threshold**.

2. Select the bay, shelf and slot/CP number

3. Click on **Line () (Optical Line)**

4. Click on **Select**.

   Important! It can take as much as 10 minutes for a TCA to activate or clear.

   Important! The default value is 0.80; all values entered must be a 3-character string, i.e., 0.50, 1.50, etc.

5. Before taking the recommended action, please check the sensitivity of the current user-provisioned thresholds which can cause inadvertent activation of TCAs, and, as a result, may only require adjusting the current threshold value. Make sure that the threshold is set for an EOL value. The original value for EOL is 0.8.

END OF STEPS

Recommended Action

CAUTION

SERVICE AFFECTING - Failure to follow instructions in Step 1 could result in service interruption.

1 Notify the person responsible for the optical line associated with the service or protection signals assigned to this OA to manually switch the service line to a protection line or ensure all protection lines assigned to this OA are not being used for service. Another option is to restore service on a different Optical Line System or route.

2 Using the AID and Description columns from the **FAULT-NE Condition List** report, identify the circuit pack (use the line identifier, for example, Line 1E) associated with this incoming failure condition.

Important! The circuit pack identified in the AID column can be located in *WaveStar® OLS 1.6T Applications Planning Guide*, (365-575-786), Bay Configurations.

3 Remove the shelf cover. For help, refer to "DLP-511: Install/Remove Shelf Cover" (14-19).

4 Replace the OA circuit pack identified in Step 2. For help, refer to "DLP-514: Remove and/or Install Circuit Pack" (14-30).

5 Retrieve a **FAULT-NE Condition List**.

6 Did the alarm clear?

IF...	THEN...
YES	Continue with Step 7.
NO	Continue with Step 8.

7 Baseline the replaced circuit pack. For help, refer to "DLP-529: Baseline Optical Parameters" (14-74).

8 Replace the shelf cover. For help, refer to "DLP-511: Install/Remove Shelf Cover" (14-19).

9 Did the alarm clear?

IF...	THEN...
YES	Notify the person responsible for all affected service or protection signals assigned to this OA that this Optical Line can now be returned to service..
NO	Contact the appropriate maintenance support organization for technical assistance.

END OF STEPS

TAP-219: Clear ’TCA Optics: OTU OC-48/STM-16 (OPR)’

Overview

The amount of signal power received by the OTU has dropped below the low threshold.

Ensure the following:

Make sure there are ***no*** standing alarms that can attribute to the TCA(s), for example, if there is an OCHAN TCA make sure that the corresponding upstream add OTU is not in alarm.

All TCAs have a default threshold value that was carefully chosen. With the exception of OPR and OPT, all TCAs can be user-provisioned.

If the TCA is occurring on more than one node associated with the same channel/wavelength, start the following trouble-clearing process at the first upstream node that is reporting the TCA. Fixing this node first may very well clear the TCA at the other downstream nodes.

Recommended Action For Add OTU

Follow these steps to clear this TCA:

CAUTION

SERVICE AFFECTING - Failure to follow instructions in Step 1 could result in service interruption.

1 Notify the person responsible for the optical line associated with the service or protection signals assigned to this OA to manually switch the service line to a protection line or ensure all protection lines assigned to this OA are not being used for service. Another option is to restore service on a different Optical Line System or route.

2 Fix/replace the external connecting equipment that is connected to the OTU, connecting fiber or connector(s).

3 If problem persists, contact the appropriate maintenance support organization for technical assistance.

4 Notify the person that is responsible for all affected service or protection signals assigned to this OA that this Optical Line can now be returned to service.

5 STOP! YOU HAVE COMPLETED THIS PROCEDURE.

END OF STEPS

Recommended Action For Drop OTU

Follow these steps to clear this TCA:

1 Determine the frequency/wavelength of the optical channel received at the OTUD port.

2 Using the CIT, select **PERFORMANCE-Reports** to obtain a PM Report. Check the receive OA in the same node as the OTUD for an OCHAN TCA. If the TCA is present it should be listed in the NE Alarm List.

3 If there is an OCHAN TCA, clear this TCA.

CAUTION

SERVICE AFFECTING - Failure to follow instructions in Step 4 could result in service interruption.

4 Notify the person responsible for the optical line associated with the service or protection signals assigned to this OA to manually switch the service line to a protection line or ensure all protection lines assigned to this OA are not being used for service. Another option is to restore service on a different Optical Line System or route.

5 Using the CIT, select **PERFORMANCE-Reports** to obtain a PM Report. Check the receive OA in the same node as the OTUD for an OCHAN TCA.check the OCHAN power at the output of the OA.

1. Using a power meter, measure the power at the associated output port of the ODU.
2. Subtract the OCHAN power level from the ODU output port power level.
   - If the result is more than the expected loss per *WaveStar® OLS 1.6T Applications and Planning Guide*, (365-575-786), Technical Specifications, the LBOs and/or fiber(s) that connect the ODUs and/or ODU to the OTUD port may be dirty or defective.
   - If the difference is within the expected value, contact the appropriate maintenance support organization for technical assistance.

6 Notify the person that is responsible for all affected service or protection signals assigned to this OA that this Optical Line can now be returned to service.

END OF STEPS

□

TAP-220: Clear ’TCA Optics: OTU OC-48/STM-16 (OPT)’

Overview

The amount of signal power transmitted by the OTU has exceeded the high threshold or dropped below the low threshold.

Ensure the following:

Make sure there are ***no*** standing alarms that can attribute to the TCA(s), for example, if there is an OCHAN TCA make sure that the corresponding upstream add OTU is not in alarm.

All TCAs have a default threshold value that was carefully chosen. With the exception of OPR and OPT, all TCAs can be user-provisioned.

If the TCA is occurring on more than one node associated with the same channel/wavelength, start the following trouble-clearing process at the first upstream node that is reporting the TCA. Fixing this node first may very well clear the TCA at the other downstream nodes.

Recommended Action

Follow these steps to clear this TCA:

CAUTION

SERVICE AFFECTING - Failure to follow instructions in Step 1 could result in service interruption.

1 Notify the person responsible for the optical line associated with the service or protection signals assigned to this OA to manually switch the service line to a protection line or ensure all protection lines assigned to this OA are not being used for service. Another option is to restore service on a different Optical Line System or route.

2 Replace the OTU circuit pack as per instruction in DLP-514: Remove and/or Install Circuit Pack (10-30).

3 If problem persists, contact the appropriate maintenance support organization for technical assistance.

4 STOP! YOU HAVE COMPLETED THIS PROCEDURE.

5 Notify the person that is responsible for all affected service or protection signals assigned to this OA that this Optical Line can now be returned to service.

END OF STEPS

□

TAP-221: Clear ’TCA Optics: OTU OC-48/STM-16 (LBC)’

Overview

The value of the LASER bias current has exceeded the high threshold.

Ensure the following:

Make sure there are ***no*** standing alarms that can attribute to the TCA(s), for example, if there is an OCHAN TCA make sure that the corresponding upstream add OTU is not in alarm.

All TCAs have a default threshold value that was carefully chosen. With the exception of OPR and OPT, all TCAs can be user-provisioned.

If the TCA is occurring on more than one node associated with the same channel/wavelength, start the following trouble-clearing process at the first upstream node that is reporting the TCA. Fixing this node first may very well clear the TCA at the other downstream nodes.

Recommended Action

CAUTION

SERVICE AFFECTING - Failure to follow instructions in Step 2 could result in service interruption.

1 Notify the person responsible for the optical line associated with the service or protection signals assigned to this OA to manually switch the service line to a protection line or ensure all protection lines assigned to this OA are not being used for service. Another option is to restore service on a different Optical Line System or route.

2 Replace the OTU circuit pack as per instructions in DLP-514: Remove and/or Install Circuit Pack (10-30).

3 Notify the person that is responsible for all affected service or protection signals assigned to this OA that this Optical Line can now be returned to service.

END OF STEPS

TAP-222: Clear ’TCA Optics: OTU OC-192/STM-64 (OPR)’

Overview

The amount of signal power received by the OTU has dropped below the low threshold.

Ensure the following:

Make sure there are ***no*** standing alarms that can attribute to the TCA(s), for example, if there is an OCHAN TCA make sure that the corresponding upstream add OTU is not in alarm.

All TCAs have a default threshold value that was carefully chosen. With the exception of OPR and OPT, all TCAs can be user-provisioned.

If the TCA is occurring on more than one node associated with the same channel/wavelength, start the following trouble-clearing process at the first upstream node that is reporting the TCA. Fixing this node first may very well clear the TCA at the other downstream nodes.

Recommended Action For Add OTU

Follow these steps to clear this TCA:

CAUTION

SERVICE AFFECTING - Failure to follow instructions in Step 1 could result in service interruption.

1 Notify the person responsible for the optical line associated with the service or protection signals assigned to this OA to manually switch the service line to a protection line or ensure all protection lines assigned to this OA are not being used for service. Another option is to restore service on a different Optical Line System or route.

2 Fix/replace the external connecting equipment that is connected to the OTU, connecting fiber or connector(s).

3 If problem persists, contact the appropriate maintenance support organization for technical assistance.

4 Notify the person that is responsible for all affected service or protection signals assigned to this OA that this Optical Line can now be returned to service.

5 STOP! YOU HAVE COMPLETED THIS PROCEDURE.

END OF STEPS

Recommended Action For Drop OTU

Follow these steps to clear this TCA:

1 Determine the frequency/wavelength of the optical channel received at the OTUD port. If the TCA is present it should be listed in the NE Alarm List.

2 Using the CIT, check the receive OA in the same node as the OTUD for an OCHAN TCA.

3 If there is an OCHAN TCA, clear this TCA.

CAUTION

SERVICE AFFECTING - Failure to follow instructions in Step 4 could result in service interruption.

4 Notify the person responsible for the optical line associated with the service or protection signals assigned to this OA to manually switch the service line to a protection line or ensure all protection lines assigned to this OA are not being used for service. Another option is to restore service on a different Optical Line System or route.

5 If there is no associated OCHAN TCA, using the CIT, select **PERFORMANCE-Reports** to obtain a PM Report. Check the OCHAN power at the output of the OA.

1. Using a power meter, measure the power at the associated output port of the ODU.
2. Subtract the OCHAN power level from the ODU output port power level.
   - If the result is more than the expected loss per *WaveStar® OLS 1.6T Applications Planning Guide*, (365-575-786), Technical Specifications, the LBOs and/or fiber(s) that connect the ODUs and/or ODU to the OTUD port may be dirty or defective.
   - If the difference is within the expected value, contact the appropriate maintenance support organization for technical assistance.

6 Notify the person that is responsible for all affected service or protection signals assigned to this OA that this Optical Line can now be returned to service.

END OF STEPS

□

TAP-223: Clear ’TCA Optics: OTU OC-192/STM-64 (OPT)’

Overview

The amount of signal power transmitted by the OTU has exceeded the high threshold or dropped below the low threshold.

Ensure the following:

Make sure there are ***no*** standing alarms that can attribute to the TCA(s), for example, if there is an OCHAN TCA make sure that the corresponding upstream add OTU is not in alarm.

All TCAs have a default threshold value that was carefully chosen. With the exception of OPR and OPT, all TCAs can be user-provisioned.

If the TCA is occurring on more than one node associated with the same channel/wavelength, start the following trouble-clearing process at the first upstream node that is reporting the TCA. Fixing this node first may very well clear the TCA at the other downstream nodes.

Recommended Action

Follow these steps to clear this TCA:

CAUTION

SERVICE AFFECTING - Failure to follow instructions in Step 1 could result in service interruption.

1 Notify the person responsible for the optical line associated with the service or protection signals assigned to this OA to manually switch the service line to a protection line or ensure all protection lines assigned to this OA are not being used for service. Another option is to restore service on a different Optical Line System or route.

2 Replace the OTU circuit pack as per instruction in DLP-514: Remove and/or Install Circuit Pack (10-30).

3 If problem persists, contact the appropriate maintenance support organization for technical assistance.

4 Notify the person that is responsible for all affected service or protection signals assigned to this OA that this Optical Line can now be returned to service.

5 STOP! YOU HAVE COMPLETED THIS PROCEDURE.

END OF STEPS

□

TAP-224: Clear ’TCA Optics: OTU OC-192/STM-64 (LBC)’

Overview

The value of the LASER bias current has exceeded the high threshold.

Ensure the following:

Make sure there are ***no*** standing alarms that can attribute to the TCA(s), for example, if there is an OCHAN TCA make sure that the corresponding upstream add OTU is not in alarm. All TCAs have a default threshold value that was carefully chosen. With the exception of OPR and OPT, all TCAs can be user-provisioned.

If the TCA is occurring on more than one node associated with the same channel/wavelength, start the following trouble-clearing process at the first upstream node that is reporting the TCA. Fixing this node first may very well clear the TCA at the other downstream nodes.

Display the Default Threshold

The following is the procedure for displaying the default threshold:

1 Click on **PERFORMANCE-Provision Threshold**

2 Select the bay, shelf and slot/CP number

3 Click on **Line () (Optical Line)**

4 Click on **Select**.

Important! It can take as much as 10 minutes for a TCA to activate or clear.

5 Before taking the recommended action, please check the sensitivity of the current user-provisioned thresholds which can cause inadvertent activation of TCAs, and, as a result, may only require adjusting the current threshold value.

END OF STEPS

Recommended Action Follow these steps to clear this TCA:

CAUTION

SERVICE AFFECTING - Failure to follow instructions in Step 1 could result in service interruption.

1 Notify the person responsible for the optical line associated with the service or protection signals assigned to this OA to manually switch the service line to a protection line or ensure all protection lines assigned to this OA are not being used for service. Another option is to restore service on a different Optical Line System or route.

2 Replace the OTU circuit pack as per instruction in DLP-514: Remove and/or Install Circuit Pack (10-30).

3 If problem persists, contact the appropriate maintenance support organization for technical assistance.

4 Notify the person that is responsible for all affected service or protection signals assigned to this OA that this Optical Line can now be returned to service.

5 STOP! YOU HAVE COMPLETED THIS PROCEDURE.

END OF STEPS

□

TAP-225: Clear ’TCA Optics: OTU HSBB (OPR)’

Overview

The amount of signal power received by the OTU has dropped below the low threshold.

Ensure the following:

Make sure there are ***no*** standing alarms that can attribute to the TCA(s), for example, if there is an OCHAN TCA make sure that the corresponding upstream add OTU is not in alarm. All TCAs have a default threshold value that was carefully chosen. With the exception of OPR and OPT, all TCAs can be user-provisioned.

If the TCA is occurring on more than one node associated with the same channel/wavelength, start the following trouble-clearing process at the first upstream node that is reporting the TCA. Fixing this node first may very well clear the TCA at the other downstream nodes.

Display the Default Threshold

The following is the procedure for displaying the default threshold:

1 Click on **PERFORMANCE-Provision Threshold**

2 Select the bay, shelf and slot/CP number

3 Click on **Line () (Optical Line)**

4 Click on **Select**.

Important! It can take as much as 10 minutes for a TCA to activate or clear.

5 Before taking the recommended action, please check the sensitivity of the current user-provisioned thresholds which can cause inadvertent activation of TCAs, and, as a result, may only require adjusting the current threshold value.

END OF STEPS

Recommended Action For Add OTU

CAUTION

SERVICE AFFECTING - Failure to follow instructions in Step 1 could result in service interruption.

1 Notify the person responsible for the optical line associated with the service or protection signals assigned to this OA to manually switch the service line to a protection line or ensure all protection lines assigned to this OA are not being used for service. Another option is to restore service on a different Optical Line System or route.

2 Replace the OTU circuit pack as per instruction in DLP-514: Remove and/or Install Circuit Pack (10-30).

3 If problem persists, contact the appropriate maintenance support organization for technical assistance.

4 Notify the person that is responsible for all affected service or protection signals assigned to this OA that this Optical Line can now be returned to service.

5 STOP! YOU HAVE COMPLETED THIS PROCEDURE.

END OF STEPS

Recommended Action For Drop OTU

Follow these steps to clear this TCA:

1 Determine the frequency/wavelength of the optical channel received at the OTUD port.

2 Using the CIT, check the receive OA in the same node as the OTUD for an OCHAN TCA. If the TCA is present it should be listed in the NE Condition List.

3 If there is an OCHAN TCA, clear this TCA.

CAUTION

SERVICE AFFECTING - Failure to follow instructions in Step 4 could result in service interruption.

4 Notify the person responsible for the optical line associated with the service or protection signals assigned to this OA to manually switch the service line to a protection line or ensure all protection lines assigned to this OA are not being used for service. Another option is to restore service on a different Optical Line System or route.

5 Using the CIT, select **PERFORMANCE-Reports** to obtain a PM Report. Check the OCHAN power at the output of the OA.

1. Using a power meter, measure the power at the associated output port of the ODU.
2. Subtract the OCHAN power level from the ODU output port power level.
   - If the result is more than the expected loss per *WaveStar® OLS 1.6T Applications Planning Guide*, (365-575-786), Technical Specifications, the LBOs and/or fiber(s) that connect the ODUs and/or ODU to the OTUD port may be dirty or defective.
   - If the difference is within the expected value, contact the appropriate maintenance support organization for technical assistance.

   Notify the person that is responsible for all affected service or protection signals assigned to this OA that this Optical Line can now be returned to service.

END OF STEPS

□

TAP-226: Clear ’TCA Optics: OTU HSBB (OPT)’

Overview

The amount of signal power transmitted by the OTU has exceeded the high threshold or dropped below the low threshold.

Ensure the following:

Make sure there are ***no*** standing alarms that can attribute to the TCA(s), for example, if there is an OCHAN TCA make sure that the corresponding upstream add OTU is not in alarm. All TCAs have a default threshold value that was carefully chosen. With the exception of OPR and OPT, all TCAs can be user-provisioned.

If the TCA is occurring on more than one node associated with the same channel/wavelength, start the following trouble-clearing process at the first upstream node that is reporting the TCA. Fixing this node first may very well clear the TCA at the other downstream nodes.

Display the Default Threshold

The following is the procedure for displaying the default threshold:

1 Click on **PERFORMANCE-Provision Threshold**

2 Select the bay, shelf and slot/CP number

3 Click on **Line () (Optical Line)**

4 Click on **Select**.

Important! It can take as much as 10 minutes for a TCA to activate or clear.

5 Before taking the recommended action, please check the sensitivity of the current user-provisioned thresholds which can cause inadvertent activation of TCAs, and, as a result, may only require adjusting the current threshold value.

END OF STEPS

Recommended Action Follow these steps to clear this TCA:

CAUTION

SERVICE AFFECTING - Failure to follow instructions in Step 1 could result in service interruption.

1 Notify the person responsible for the optical line associated with the service or protection signals assigned to this OA to manually switch the service line to a protection line or ensure all protection lines assigned to this OA are not being used for service. Another option is to restore service on a different Optical Line System or route.

2 Replace the OTU circuit pack as per instruction in DLP-514: Remove and/or Install Circuit Pack (10-30).

3 If problem persists, contact the appropriate maintenance support organization for technical assistance.

4 Notify the person that is responsible for all affected service or protection signals assigned to this OA that this Optical Line can now be returned to service.

5 STOP! YOU HAVE COMPLETED THIS PROCEDURE.

END OF STEPS

□

TAP-227: Clear ’TCA Optics: OTU HSBB (LBC)’

Overview

The value of the LASER bias current has exceeded the high threshold.

Ensure the following:

Make sure there are ***no*** standing alarms that can attribute to the TCA(s), for example, if there is an OCHAN TCA make sure that the corresponding upstream add OTU is not in alarm.

All TCAs have a default threshold value that was carefully chosen. With the exception of OPR and OPT, all TCAs can be user-provisioned.

If the TCA is occurring on more than one node associated with the same channel/wavelength, start the following trouble-clearing process at the first upstream node that is reporting the TCA. Fixing this node first may very well clear the TCA at the other downstream nodes.

Display the Default Threshold

The following is the procedure for displaying the default threshold:

1 Click on **PERFORMANCE-Provision Threshold**

2 Select the bay, shelf and slot/CP number

3 Click on **Line () (Optical Line)**

4 Click on **Select**.

Important! It can take as much as 10 minutes for a TCA to activate or clear.

5 Before taking the recommended action, please check the sensitivity of the current user-provisioned thresholds which can cause inadvertent activation of TCAs, and, as a result, may only require adjusting the current threshold value.

END OF STEPS

Recommended Action Follow these steps to clear this TCA:

CAUTION

SERVICE AFFECTING - Failure to follow instructions in Step 1 could result in service interruption.

1 Notify the person responsible for the optical line associated with the service or protection signals assigned to this OA to manually switch the service line to a protection line or ensure all protection lines assigned to this OA are not being used for service. Another option is to restore service on a different Optical Line System or route.

2 Replace the OTU circuit pack as per instruction in DLP-514: Remove and/or Install Circuit Pack (10-30).

3 If problem persists, contact the appropriate maintenance support organization for technical assistance.

4 Notify the person that is responsible for all affected service or protection signals assigned to this OA that this Optical Line can now be returned to service.

5 STOP! YOU HAVE COMPLETED THIS PROCEDURE.

END OF STEPS

□

TAP-230: Clear ’TCA Optics: SUPVY (SPR-SU)’

Overview

The power of the receive supervisory signal has either exceeded the high threshold or has dropped below the low threshold.

Ensure the following:

Make sure there are ***no*** standing alarms that can attribute to the TCA(s), for example, if there is an OCHAN TCA make sure that the corresponding upstream add OTU is not in alarm. All TCAs have a default threshold value that was carefully chosen. With the exception of OPR and OPT, all TCAs can be user-provisioned.

If the TCA is occurring on more than one node associated with the same channel/wavelength, start the following trouble-clearing process at the first upstream node that is reporting the TCA. Fixing this node first may very well clear the TCA at the other downstream nodes.

Display the Default Threshold

The following is the procedure for displaying the default threshold:

1 Click on **PERFORMANCE-Provision Threshold**

2 Select the bay, shelf and slot/CP number

3 Click on **Line ()e/w (Supervisory Channel)**

4 Click on **Select**.

Important! It can take as much as 10 minutes for a TCA to activate or clear.

5 Before taking the recommended action, please check the sensitivity of the current user-provisioned thresholds which can cause inadvertent activation of TCAs, and, as a result, may only require adjusting the current threshold value.

END OF STEPS

Recommended Action Follow these steps to clear this TCA:

1 If there is an TOPR-OL on the same line at the same node, use TAP 213: Clear TCA Optics ’OLINE (TOPR-OL)’ (13-188) to clear the TCA before proceeding.

2 Using the CIT, select **PERFORMANCE-Reports** RTRV-PM-SUPR to obtain a PM Report:

1. Read the power of the SUP TX port on the same line at the OA at the upstream adjacent node.
2. Read the power of the SUP RX port associated with the TCA at the OA.
   Subtract 1 from 2 (span loss)
   - If value is equal to expected span loss, manually re-baseline the SUPVY port. Refer to DLP-529: Baseline Optical Parameters (10-76)
   - If problem persists, contact the appropriate maintenance support organization for technical assistance.
   - STOP! YOU HAVE COMPLETED THIS PROCEDURE.

CAUTION

SERVICE AFFECTING - Failure to follow instructions in Step 3 could result in service interruption.

3 Notify the person responsible for the optical line associated with the service or protection signals assigned to this OA to manually switch the service line to a protection line or ensure all protection lines assigned to this OA are not being used for service. Another option is to restore service on a different Optical Line System or route.

4 Determine the problem, for example, a kinked fiber, and correct span loss.

1. If problem persists, contact the appropriate maintenance support organization for technical assistance.

Notify the person that is responsible for all affected service or protection signals assigned to this OA that this Optical Line can now be returned to service.

2. STOP! YOU HAVE COMPLETED THIS PROCEDURE.

END OF STEPS

□

TAP-231: Clear ’TCA Optics: SUPVY (SPT-SU)’

Overview

The power of the transmit supervisory signal has either exceeded the high threshold or has dropped below the low threshold.

Ensure the following:

Make sure there are ***no*** standing alarms that can attribute to the TCA(s), for example, if there is an OCHAN TCA make sure that the corresponding upstream add OTU is not in alarm. All TCAs have a default threshold value that was carefully chosen. With the exception of OPR and OPT, all TCAs can be user-provisioned.

If the TCA is occurring on more than one node associated with the same channel/wavelength, start the following trouble-clearing process at the first upstream node that is reporting the TCA. Fixing this node first may very well clear the TCA at the other downstream nodes.

Display the Default Threshold

The following is the procedure for displaying the default threshold:

1 Click on **PERFORMANCE-Provision Threshold**

2 Select the bay, shelf and slot/CP number

3 Click on **Line ()e/w (Supervisory Channel)**

4 Click on **Select**.

Important! It can take as much as 10 minutes for a TCA to activate or clear.

5 Before taking the recommended action, please check the sensitivity of the current user-provisioned thresholds which can cause inadvertent activation of TCAs, and, as a result, may only require adjusting the current threshold value.

END OF STEPS

Recommended Action

Using the CIT, select **PERFORMANCE-Reports-Supervisory** to obtain a Performance Monitoring report. Read the power of the SUP TX port associated with the TCA at the OA at node where TCA is active

CAUTION

SERVICE AFFECTING - Failure to follow instructions in Step 1 could result in service interruption.

1 Notify the person responsible for the optical line associated with the service or protection signals assigned to this OA to manually switch the service line to a protection line or ensure all protection lines assigned to this OA are not being used for service. Another option is to restore service on a different Optical Line System or route.

2 If the power is within the range of -2 to +3 dBm, manually re-baseline the SUPVY port. Refer to DLP-529: Baseline Optical Parameters (10-76).

3 If the power is outside the range

1. Using a power meter, disconnect the fiber to the SUP TX port of the OA, connect the power meter and measure the power
2. If the power is within the range from Step
   a. Replace the LBO at the SUP TX port of the OA, reconnect the fiber to the SUP TX port of the OA and measure power using the CIT.
   b. If the problem persists, contact the appropriate maintenance support organization for technical assistance.
   Notify the person that is responsible for all affected service or protection signals assigned to this OA that this Optical Line can now be returned to service.
   c. STOP! YOU HAVE COMPLETED THIS PROCEDURE.

3. If power is outside the range
   a. LBO at output port of the SUPVY or the fiber that connects SUPVY to OA is defective; replace and measure power
   b. If power is still outside the range, replace the SUPVY circuit pack.

END OF STEPS

□

TAP-232: Clear 'Incoming ORS Client LOS'

Overview

The power detector located on the C1 IN/C2 IN port of the ORS circuit pack has detected a substantial decrease in the incoming client signal power.

Procedure

1 Refer to the AID column of the **FAULT-NE Condition List** report and determine the bay location of the ORS circuit pack.

2 Remove the appropriate shelf cover. For details, refer to "DLP-514: Remove and/or Install Circuit Pack" (14-30).

3 Refer to the AID column of the NE Condition List report and determine the port, C1 IN or C2 IN, reporting the failure.

4 Make a visual inspection of the incoming signal cable and connections and correct any problems found. For details, refer to DLP-517: Inspect Optical Fiber(s) (10-43)

5 Did a visual inspection reveal any problems?

IF...	THEN...
YES	Continue with Step 6.
NO	Continue with Step 8.

6 At the CIT, click on the **FAULT-NE Condition List** to obtain a report.

7 Is the failure condition cleared?

IF...	THEN...
YES	Continue with Step 30.
NO	Continue with Step 8.

8 Notify the person/client responsible for the service assigned to the failed ORS Port (C1 IN or C2 IN) to switch service on a different route.

9 Make an optical power measurement on the incoming optical jumper connected to the ORS Port (C1 IN or C2 IN) reporting the failure.

10 Using the power level reading obtained in Step 9 and the appropriate row of Table 14-3, "OTU Input Power Range" (14-52) of "DLP-524: Connect Optical Power Meter for Measurement at OTU () IN () Port" (14-49), determine if the power level is within range. For wavelengths of 1550 nm range, the measured power level should be between -16 dBm to 0.5 dBm. For wavelengths of 1300 nm range, the measured power level should be between -15 dBm to 0.5 dBm. Is the measured power level within range?

IF...	THEN...
YES	Continue with Step 15.
NO	Continue with Step 11.

11 Clean the incoming fiber jumper. For details, refer to DLP-510: Inspect and Clean Optical Fiber Connectors (10-19).

12 Connect the incoming fiber jumper to the correct ORS (C1 IN or C2 IN) port.

13 Initiate a Trouble Report to the source of the failed incoming signal indicating the type of failure. If the source of the failed incoming signal returns a trouble report indicating "no trouble found," then contact the appropriate maintenance support organization for further technical assistance. For details, refer to DLP-507: Identify Source of Incoming Signal (10-15).

14 STOP! YOU HAVE COMPLETED THIS PROCEDURE.

15 Obtain an LBO of the same value as the one in the ORS (C1 IN or C2 IN) reporting the failure.

16 Remove the LBO from the ORS (C1 IN or C2 IN) port reporting the failure. For details, refer to ″DLP-512: Install/Remove Lightguide Buildout″ (14-23).

17 Clean the replacement LBO and install in the ORS (C1 IN or C2 IN) port. For details, refer to ″DLP-510: Inspect and Clean Optical Fiber Connectors″ (14-12).

18 Clean the incoming fiber jumper. For details, refer to ″DLP-510: Inspect and Clean Optical Fiber Connectors″ (14-12).

19 Connect the incoming fiber jumper to the correct ORS (C1 IN/C2 IN) port.

20 At the CIT, click on the **FAULT-NE Condition List** to obtain an updated report.

21 Is the Incoming ORS Client LOS still present?

IF...	THEN...
YES	Continue with Step 22.
NO	Continue with Step 29.

22 Notify the person/client responsible for service assigned to both of the ORS Ports (C1 IN or C2 IN) to restore service on a different route.

23 Remove the ORS indicating the incoming failure from the shelf. For details, refer to ″DLP-514: Remove and/or Install Circuit Pack″ (14-30).

CAUTION

The replacement ORS must have the same (or higher) circuit pack series number.

24 Obtain and install the replacement ORS. For details, refer to ″DLP-514: Remove and/or Install Circuit Pack″ (14-30).

25 At the CIT, click on the **FAULT-NE Condition List** to obtain an updated report.

26 Is the failure condition cleared?

IF...	THEN...
YES	Continue with Step 29.
NO	Continue with Step 27.

27 As required, check for a broken LBO, a damaged jumper, or bent or broken pins; replace any broken pin using the BERG MT370-01 pin kit for the METRAL pins. Refer to back plane pin repair/replacement procedures in the ***WaveStar® OLS 1.6T Installation Manual*** (365-575-790).

28 Is the failure condition cleared?

IF...	THEN...
YES	Continue with Step 29.
NO	Contact the appropriate maintenance support organization for further technical assistance.

29 Notify the person/client responsible for the service assigned to this ORS circuit pack that service can now be returned to the normal route.

30 Reinstall the shelf cover. For details, refer to "DLP-511: Install/Remove Shelf Cover" (14-19).

END OF STEPS

□

TAP-233: Clear ’Incoming ORS Line LOS’

Overview

The power detector located on the 1A IN/1B IN port or 2A IN/2B IN port of the ORS circuit pack has detected a substantial decrease in the incoming client signal power.

Procedure

1 Refer to the AID column of the NE Condition List report and determine the bay location of the ORS circuit pack.

2 Remove the appropriate shelf cover. For details, refer to ″DLP-514: Remove and/or Install Circuit Pack″ (14-30).

3 Refer to the AID column of the **FAULT-NE Condition List** report and determine the port, 1A IN, 1B IN, 2A IN, or 2B IN, reporting the failure.

CAUTION

SERVICE AFFECTING - Failure to follow instructions in Step 4 could result in service interruption.

4 Make a visual inspection of the incoming signal cable and connections and correct any problems found. For details, refer to ″DLP-514: Remove and/or Install Circuit Pack″ (14-30).

5 Did a visual inspection reveal any problems?

IF...	THEN...
YES	Continue with Step 6.
NO	Continue with Step 8.

6 At the CIT, click on the **FAULT-NE Condition List** to obtain a report.

7 Is the failure condition cleared?

IF...	THEN...
YES	Continue with Step 46.
NO	Continue with Step 8.

8 At the CIT, click on the **FAULT-NE Condition List** to obtain a report and ensure that an ORS signal fail auto switch is listed for the failed ORS port listed in Step 3. Notify the person/client responsible for the service assigned to the failed ORS Port (1A IN, 1B IN, 2A IN, or 2B IN) identified in Step 3 to switch service on a different route.

9 Make an optical power measurement on the incoming optical jumper connected to the ORS Port (1A IN, 1B IN, 2A IN, or 2B IN) reporting the failure. For wavelengths of 1550 nm range, the measured power level should be between -16 dBm to 0.5 dBm. For wavelengths of 1300 nm range, the measured power level should be between -15 dBm to 0.5 dBm. Is the measured power level within range?

10 Is the measured power within the required range?

IF...	THEN...
YES	Continue with Step 31.
NO	Continue with Step 11.

11 Clean the incoming fiber jumper. For details, refer to ″DLP-510: Inspect and Clean Optical Fiber Connectors″ (14-12).

12 Connect the incoming fiber jumper to the correct ORS (1A IN, 1B IN, 2A IN, or 2B IN) port.

13 At the CIT select Reports> Port Associations List, then in the Select List Constraint dialog box, select Bay, Shelf, Slot with the failed ORS condition.

14 Using the destination port column of the port from Step 13, locate the ORS port with the failed connection. Then, using the source port AID column to the left of the Destination Port, AID column, determine the source of the incoming signal.

15 Is the identified source of the incoming signal in this system or external equipment?

IF...	THEN...
In this system,	Continue with Step 16.
External equipment, use local office records to determine the source of the incoming signal,	Continue with Step 16.

16 Make a visual inspection of the fiber jumper and connections at the OTU () port on the OTU connected to the ORS port reporting the failure and correct any problems found. For details, refer to DLP-517: Inspect Optical Fiber(s) (14-43)

17 Did the visual inspection reveal any problems?

IF...	THEN...
YES	Continue with Step 18.
NO	Continue with Step 20.

18 At the CIT, click on the **FAULT-NE Condition List** to obtain a report.

19 Is the failure condition cleared?

IF...	THEN...
YES	Continue with Step 46.
NO	Continue with Step 20.

20 Make an optical power measurement at the OUT port of the OTU identified in Step 15.

21 Is the measure power within the required range?

IF...	THEN...
YES	Continue with Step 22
NO	Continue with Step 26.

22 Replace fiber jumper between the OTU OUT ( ) port and the ORS port reporting failure.

23 At the CIT, click on the **FAULT-NE Condition List** to obtain a report.

24 Is the failure condition cleared?

IF...	THEN...
YES	Continue with Step 46.
NO	Contact the appropriate maintenance support organization for further technical assistance.

25 STOP! YOU HAVE COMPLETED THIS PROCEDURE.

26 Remove the OTU identified as the source of the incoming signal from Step 15.

27 Obtain and install a replacement for the OTU. For details, refer to ″DLP-514: Remove and/or Install Circuit Pack″ (14-30).

28 At the CIT, click on the **FAULT-NE Condition List** to obtain a report.

29 Did the condition clear?

IF...	THEN...
YES	Go to Step 46.
NO	Contact the appropriate maintenance support organization for further technical assistance.

30 STOP! YOU HAVE COMPLETED THIS PROCEDURE.

31 Obtain an LBO of the same value as the one in the ORS port reporting the failure.

32 Remove the LBO from the ORS port reporting the failure. For details, refer to DLP-512: Install/Remove Lightguide Buildout (14-23).

33 Clean the replacement LBO and install in the ORS port. For details, refer to DLP-510: Inspect and Clean Optical Fiber Connectors (14-12).

34 Clean the incoming fiber jumper. For details, refer to DLP-510: Inspect and Clean Optical Fiber Connectors (14-12).

35 Connect the incoming fiber jumper to the correct ORS port.

36 At the CIT, click on the **FAULT-NE Condition List** to obtain a report.

37 Is the failure condition cleared?

IF...	THEN...
YES	Continue with Step 46.
NO	Continue with Step 38.

38 Notify the person/client responsible for the service assigned to the both of the ORS ports (C1 IN and C2 IN) to restore service on a different route.

39 Remove the ORS indicating the incoming failure from the shelf. For details, refer to "DLP-514: Remove and/or Install Circuit Pack" (14-30).

CAUTION

The replacement ORS must have the same (or higher) circuit pack series number.

40 Obtain and install the replacement ORS. For details, refer to "DLP-514: Remove and/or Install Circuit Pack" (14-30).

41 At the CIT, click on the **FAULT-NE Condition List** to obtain a report.

42 Is the failure condition cleared?

IF...	THEN...
YES	Continue with Step 45.
NO	Continue with Step 43.

43 As required, check for a broken LBO, a damaged jumper, or bent or broken pins; replace any broken pin using the BERG MT370-01 pin kit for the METRAL pins. Refer to back plane pin repair/replacement procedures in the ***WaveStar® OLS 1.6T Installation Guide*** (365-575-763).

44 Is the failure condition cleared?

IF...	THEN...
YES	Continue with Step 45.
NO	Contact the appropriate maintenance support organization for further technical assistance.

45 Notify the person/client responsible for the service assigned to this ORS circuit pack that service can now be returned to the normal route.

46 Reinstall the shelf cover. For details, refer to ″DLP-511: Install/Remove Shelf Cover″ (14-19).

END OF STEPS

□

TAP-234: Address ’Incoming LOS Signal Failure When OTU is Associated with ORS’

Overview

This procedure is used to clear an Incoming ( ) LOS Failure condition associated with an Optical Redundancy Switch.

Procedure

1 Is the OTU reporting the condition an ADD OTU or a DROP OTU?

IF...	THEN...
If an ADD OTU	Continue with Step 2.
If a DROP OTU	Continue with Step 15.

2 Make an optical power measurement at the 1A OUT, 1B OUT, 2A OUT, or 2B OUT ports of the ORS associated with the OTU port reporting the failed condition.

3 Is the measured power level within the values required range of Table 14-3 of ″DLP-524: Connect Optical Power Meter for Measurement at OTU () IN () Port″ (14-51)?

IF...	THEN...
YES	Continue with Step 4.
NO	Continue with Step 7.

4 Replace the fiber jumper between the OTU IN ( ) port of the OTU reporting the failed condition and the ORS switch.

5 At the CIT, click on the **FAULT-NE Condition List** to obtain a report.

6 Is the failure condition cleared?

IF...	THEN...
YES	Continue with Step 27.

IF...	THEN...
NO	Contact the appropriate maintenance support organization for further technical assistance.

7 Notify the person/client responsible for the service assigned to the both of the ORS ports (C1 IN and C2 IN) to restore service on a different route.

8 Remove the ORS associated with this trouble condition. For help, refer to DLP-514: Remove and/or Install Circuit Pack (14-30).

9 Obtain and install the replacement ORS. For help, refer to "DLP-514: Remove and/or Install Circuit Pack" (14-30).

10 At the CIT connected to the Optical Line System with the OTU reporting the failure, click on the NE Condition List icon to obtain a report.

11 Is the Incoming ( ) LOS Failure condition still listed?

IF...	THEN...
YES	Continue with Step 12.
NO	Continue with Step 26.

12 Remove the replacement circuit pack and reinstall the circuit pack that was originally removed. For help, refer to "DLP-514: Remove and/or Install Circuit Pack" (14-30).

13 Contact the appropriate maintenance support organization for further technical assistance.

14 STOP! YOU HAVE COMPLETED THIS PROCEDURE.

15 Make an optical power measurement at the ODU port associated with the OTU reporting the failed condition.

16 Is the measured power level within the values required range of Table 14-3 of "DLP-524: Connect Optical Power Meter for Measurement at OTU () IN () Port" (14-51)?

IF...	THEN...
YES	Continue with Step 17.
NO	Continue with Step 20.

17 Replace the fiber jumper between the ODU port measured in Step 15 and the OTU ( ) IN port reporting the failed condition.

18 At the CIT, select the **FAULT-NE Condition List** to obtain a report.

19 Is the failure condition cleared?

IF...	THEN...
YES	Continue with Step 26.
NO	Contact the appropriate maintenance support organization for further technical assistance.

20 Notify the person responsible for the optical line associate with the service or protection signals assigned to the ODU circuit pack; 1) to manually switch the service line to a protection line, and 2) to ensure that all protection lines that are assigned to this circuit pack are not being used for service. Another option is to restore service on a different Optical Line System.

21 Remove the ODU associated with this failed condition. For help, refer to "DLP-514: Remove and/or Install Circuit Pack" (14-30).

22 Obtain a replacement circuit pack with the same or a higher series number and install the circuit pack.

23 Wait 15 minutes for the ODU to warm up and boot.

24 At the CIT, select the **FAULT-NE Condition List** to obtain a report.

25 Is the failure condition cleared?

IF...	THEN...
YES	Continue with Step 26.
NO	Contact the appropriate maintenance support organization for further technical assistance.

26 Notify the person responsible for all service/protection signals assigned to the ODU circuit pack that the signals can be returned to service.

27 Reinstall the shelf cover. For details, refer to "DLP-514: Remove and/or Install Circuit Pack" (14-30).

END OF STEPS

□

TAP-235: Address ’DCM Port Loss Out of Range’

Overview

The power detectors located on the DCM IN and DCM OUT ports of the OA circuit pack have detected a substantial increase in optical loss between the DCM IN and DCM OUT ports.

Procedure

1 Refer to the AID column of the **FAULT-NE Condition List** report and determine the bay location of the OA circuit pack.

2 Remove the appropriate shelf cover. For help, refer to ″DLP-511: Install/Remove Shelf Cover″ (14-19).

3 Refer to the AID column of the **FAULT-NE Condition List** report and determine the DCM port, and the OA circuit pack reporting the failure, using fiber labels and/or fiber routing tables in the ***WaveStar® OLS 1.6T Installation Manual*** (365-575-790) to locate the DCM apparatus unit associated with the DCM ports reporting the failure.

4 Make a visual inspection of the fiber jumpers and connections at the OA circuit pack DCM ports and DCM apparatus unit IN and OUT ports. Correct any problems found. For help, refer to ″DLP-517: Inspect Optical Fiber(s)″ (14-42).

5 Did the visual inspection reveal any problems?

IF...	THEN...
YES	Continue with Step 6.
NO	Continue with Step 8.

6 At the CIT, click on the **FAULT-NE Condition List** to obtain a report.

7 Is the failure condition cleared?

IF...	THEN...
YES	Continue with Step 43.
NO	Continue with Step 8.

8 Notify the person responsible for service assigned to the failed OA-DCM port identified in Step 3 to switch service on a different route.

9 Remove the LBO at the DCM OUT port on the OA circuit pack and replace it with a 0-dB LBO. For help, refer to ″DLP-512: Install/Remove Lightguide Buildout″ (14-23).

10 Make an optical power measurement at the DCM OUT port of the OA circuit pack reporting the failure. Record the measured level.

11 Remove the 0-dB LBO at the DCM OUT port on the OA circuit pack and replace it with the original LBO removed in Step 9. For help, refer to ″DLP-512: Install/Remove Lightguide Buildout″ (14-23).

12 With the original LBO in place, make another optical power measurement at the DCM OUT port of the OA circuit pack. Record the measured level.

13 Compare the measured power level recorded in Step 10 with the measured power level recorded in Step 12.

14 Is the measured power level recorded in Step 12 lower in power by the same amount as the LBO value?

IF...	THEN...
YES	Continue with Step 22.
NO	Continue with Step 15.

15 Obtain a replacement LBO of the same value as the LBO removed from the DCM OUT port in Step 9.

16 Clean the replacement LBO and install in the DCM OUT port of the OA circuit pack. For help, refer to ″DLP-510: Inspect and Clean Optical Fiber Connectors″ (14-12).

17 With the replacement LBO in place, make another optical power measurement at the DCM OUT port of the OA circuit pack. Record the measured level.

18 Compare the measured power level recorded in Step 10 with the measured power level recorded in Step 17.

19 Is the measured power level recorded in Step 17 lower in power by the same amount as the LBO value?

IF...	THEN...
YES	Continue with Step 20.
NO	Contact the appropriate maintenance support organization for further technical assistance.

20 Clean the fiber connectors and reconnect the fiber jumper to the DCM OUT port of the OA circuit pack reporting the failure. For help, refer to ″DLP-510: Inspect and Clean Optical Fiber Connectors″ (14-12).

21 Is the failure condition cleared?

IF...	THEN...
YES	Continue with Step 42.
NO	Continue with Step 23.

22 Clean the fiber connectors and reconnect the fiber jumper to the DCM OUT port of the OA circuit pack reporting the failure. For help, refer to ″DLP-510: Inspect and Clean Optical Fiber Connectors″ (14-12).

23 Disconnect the fiber jumper that is connected to the IN port of the DCM apparatus unit.

24 Connect the fiber jumper disconnected in Step 23 to a power meter and obtain a power measurement.

25 Is the power measurement obtained from Step 24 within +/– 0.5 dB of the power measurement made in Step 12?

IF...	THEN...
YES	Continue with Step 28.
NO	Continue with Step 26.

26 Clean connectors and replace the fiber jumper between the OA circuit pack DCM OUT and DCM apparatus unit IN ports.

27 Is the failure condition cleared?

IF...	THEN...
YES	Continue with Step 42.
NO	Contact the appropriate maintenance support organization for further technical assistance.

28 Clean the fiber connectors and reconnect the fiber jumper to the IN port of the DCM apparatus unit. For help, refer to ″DLP-510: Inspect and Clean Optical Fiber Connectors″ (14-12).

29 Disconnect the fiber jumper that is connected to the OUT port of the DCM apparatus unit.

30 Make an optical power measurement at the DCM apparatus unit of the OUT port.

31 Is the power measurement obtained from Step 30 within 10 dB of the power measurement obtained from Step 12?

IF...	THEN...
YES	Continue with Step 34.
NO	Continue with Step 32.

32 Replace the DCM apparatus unit. For help, refer to ″DLP-514: Remove and/or Install Circuit Pack″ (14-30).

33 Is the failure condition cleared?

IF...	THEN...
YES	Continue with Step 42.
NO	Contact the appropriate maintenance support organization for further technical assistance.

34 Clean the fiber connectors and reconnect the fiber jumper to the OUT port of the DCM apparatus unit. For help, refer to ″DLP-510: Inspect and Clean Optical Fiber Connectors″ (14-12).

35 Disconnect the fiber jumper at the OA circuit pack DCM IN port.

36 Connect the fiber jumper disconnected in Step 35 to the power meter and make a power measurement.

37 Is the power measurement obtained from Step 36 within 11 dB of the power measurement obtained from Step 12?

IF...	THEN...
YES	Continue with Step 40.
NO	Continue with Step 38.

38 Clean connectors and replace the fiber jumper between the OA circuit pack DCM IN port and DCM apparatus unit OUT port. For help, refer to "DLP-510: Inspect and Clean Optical Fiber Connectors" (14-12).

39 Is the failure condition cleared?

IF...	THEN...
YES	Continue with Step 42.
NO	Contact the appropriate maintenance support organization for further technical assistance.

40 Clean OA-DCM IN port and fiber jumper connector and reconnect fiber jumper to the OA-DCM IN port on the OA. For help, refer to "DLP-510: Inspect and Clean Optical Fiber Connectors" (14-12).

41 Is the failure condition cleared?

IF...	THEN...
YES	Continue with Step 42.
NO	Contact the appropriate maintenance support organization for further technical assistance.

42 Notify the person responsible for the service assigned to the OA-DCM port identified in Step 3 that service can now be returned to the normal route.

43 Reinstall the shelf cover. For help, refer to "DLP-514: Remove and/or Install Circuit Pack" (14-30).

END OF STEPS

□

TAP-236: Clear ’OCh Payload Label Mismatch’

Overview

This alarm condition is issued when the system software detects at the receive OTU (OTUD70) a signal source other than a 2.5 Gb/s signal intended for a 4:1 10G Multiplex OTU (OTU70/OTUD70).

Procedure

1 At the CIT, click on the **FAULT-NE Condition List** to obtain a report.

2 Using the AID column from the report (Step 1), identify the appropriate shelf, slot location and the OCh (Optical Channel associated with a 4:1 10G Multiplex OTU) port of the OTU with the alarm condition.

3 Remove the shelf cover. All connections can be accessed from the front. For help, refer to ″DLP-511: Install/Remove Shelf Cover″.

CAUTION

SERVICE AFFECTING - Failure to follow instructions in Step 4 could result in service interruption.

4 Make a visual inspection of the incoming signal cable(s) and connections and correct any problems found. For help, refer to ″DLP-517: Inspect Optical Fiber(s)″ (14-42).

5 Did the visual inspection reveal any problems?

IF...	THEN...
YES	Continue with Step 6.
NO	Continue with Step 8.

6 At the CIT, click on the **Fault-NE Condition List** to obtain a report.

7 Is the OCh Payload Label Mismatch alarm condition cleared?

IF...	THEN...
YES	Continue with Step 9.
NO	Continue with Step 8.

8 Initiate a Trouble Report to the source of the signal for this 4:1 10G Multiplex OTU. If the source of the alarm condition incoming signal returns a Trouble Report indicating ″no trouble found,″ then contact the appropriate maintenance support organization for further technical assistance.

9 Reinstall the shelf cover. For help, refer to ″DLP-511: Install/Remove Shelf Cover″ (14-19).

10 STOP! YOU HAVE COMPLETED THIS PROCEDURE.

END OF STEPS

□

TAP-237: Clear ’TCA Digital Alarm OTU OC48 or 192 CVS, ESS, SESS, or SEFESS (15 min/1 day)’

Overview

This alarm condition is issued when the performance of the Optical Channel has exceeded the performance thresholds established by the customer or factory settings.

Important! Degradation of the upstream transmission and equipment quality could cause multiple alarms. Before attempting to clear this alarm, log into the most upstream Network Element with the same alarm condition.

Procedure

1 At the most upstream office with the TCA alarm, use the CIT to access the **FAULT-NE Condition List** to obtain a report.

2 Using the CIT, select **PERFORMANCE-Reports-OTU Port Signal**.

3 In the equipment tree, click on the bay, shelf, and slot for the OTU identified in the Performance Report from Step 2.

4 Click on the appropriate Input Port of the OTU identified in Steps 2 and 3.

5 In the **OTU Performance Parameter Selection** dialog box,

1. Choose **Select All** under the OTU PM Parameter Dialog box;
2. Select **Appropriate Time Bin** under the Time Period Dialog box;
3. Select **O-UP**(all bins, even those without errors), or **1–UP**(only the bins with errors);
4. Select OK.

6 Using the PM Report, confirm that the identified IN port of the OTU is exceeding the threshold.

7 Remove the appropriate shelf cover. All connections can be accessed from the front. For help, refer to "DLP-511: Install/Remove Shelf Cover."

CAUTION

SERVICE AFFECTING - Failure to follow instructions in Step 8 could result in service interruption.

8 Notify the person responsible for the optical line or optical channel associated with the service or protection signals assigned to this circuit pack to 1) manually switch the service line or optical channel to a protection line; and 2) ensure that all protection lines or optical channels that are assigned to this circuit pack are not being used for service. Another option is to restore service on a different Optical Line System or route.

9 Make an optical power measurement on the incoming optical jumper that provides input to the IN port at the OTU. For help, refer to DLP-524: Connect Optical Power Meter for Measurement at OTU () IN () Port.

10 Was the measured optical power within the limits?

IF...	THEN...
YES	Continue with Step 27.
NO	Continue with Step 11.

11 Clean the incoming fiber jumper. For help, refer to "DLP-510: Inspect and Clean Optical Fiber Connectors".

12 Reconnect the incoming fiber jumper to the correct OTU IN port.

13 Using the CIT, select **PERFORMANCE-Initialize Registers-Port PM Register Initialization**.

14 Within the equipment tree, click on the bay, shelf, and slot for the desired OTU that was identified in the Performance Report for the exceeded threshold and **Select**.

15 Within the **Port PM Register Initialization**dialogue box, select the following:

- For **Time Period**, select "appropriate time period".
- For **Apply TO**, select "OTU pack".

16 Select **OK**.

Important! Wait 15 minutes before pulling a new alarm list as prescribed in Step 17.

17 At the CIT, select **FAULT-NE Condition List** to obtain a report.

18 Is the TCA alarm condition cleared?

IF...	THEN...
YES	***STOP! YOU HAVE COMPLETED THIS PROCEDURE***.
NO	Continue with Step 19.

19 Is this a drop OTU?

IF...	THEN...
YES	Continue with Step 20.
NO	Continue with Step 26.

20 Make an optical power measurement on the incoming optical jumper that provides input to the IN port at the OTUD. For help, refer to

"DLP-524: Connect Optical Power Meter for Measurement at OTUD () IN () Port".

21 Was the optical power measurement within the limits?

IF...	THEN...
YES(OC-192/48 input level equals −17.0)	***STOP! YOU HAVE COMPLETED THIS PROCEDURE.***
NO	Continue with Step 26.

22 Clean the incoming fiber jumper. For help, refer to "DLP-510: Inspect and Clean Optical Fiber Connectors".

23 Verify that the input LBO attenuation is as rated. For help, refer to "DLP-512: Install/Remove Lightguide Buildout".

24 Reconnect the incoming fiber jumper to the correct OTUD IN port.

25 Is the TCA alarm condition cleared?

IF...	THEN...
YES	***STOP! YOU HAVE COMPLETED THIS PROCEDURE.***
NO	Continue with Step 26.

26 Initiate a Trouble Report to the source of the incoming signal indicating the type of failed condition. If the source of the failed incoming condition returns a Trouble Report indicating "No Trouble Found," then contact the appropriate maintenance support organization for further technical assistance.

END OF STEPS

□

TAP-238: Clear ’TCA Digital Alarm OTU OC192 FEC-EC, FEC-UBC (15 min/1 day)’

Overview

This alarm condition is issued when the performance of the Optical Channel has exceeded the performance thresholds established by the customer or factory settings.

Important! Degradation of the upstream transmission and equipment quality could cause multiple alarms. Before attempting to clear this alarm, log into the most upstream Network Element with the same alarm condition.

Procedure

Important! OTU 192 FEC-EC, FEC-UBC (15 min/1 day) alarms apply only to OTUD and OTU31 (THROUGH) circuit packs.

1 At the most upstream office with the TCA alarm, use the CIT to access the **FAULT-NE Condition List** to obtain a report that will identify the OTUD.

2 Using the CIT, select **PERFORMANCE-Reports-OTUD Port Signal**.

3 In the equipment tree, click on the bay, shelf, and slot for the OTUD identified in the Performance Report from Step 2.

4 Click on the appropriate Input Port of the OTUD identified in Steps 2 and 3.

5 In the **OTUD Performance Parameter Selection** dialog box,

1. Choose **Select All** under the OTUD PM Parameter Dialog box;
2. Select **Appropriate Time Bin** under the Time Period Dialog box;
3. Select **O-UP**(all bins, even those without errors), or **1–UP**(only the bins with errors);
4. Select **OK**.

6 Using the PM Report, confirm that the identified IN port of the OTUD is exceeding the threshold.

7 Remove the appropriate shelf cover. All connections can be accessed from the front. For help, refer to "DLP-511: Install/Remove Shelf Cover."

CAUTION

SERVICE AFFECTING - Failure to follow instructions in Step 8 could result in service interruption.

8 Notify the person responsible for the optical line or optical channel associated with the service or protection signals assigned to this circuit pack to 1) manually switch the service line or optical channel to a protection line; and 2) ensure that all protection lines or optical channels that are assigned to this circuit pack are not being used for service. Another option is to restore service on a different Optical Line System or route.

9 Make an optical power measurement on the incoming optical jumper that provides input to the IN port at the OTUD. For help, refer to DLP-524: Connect Optical Power Meter for Measurement at OTU () IN () Port.

10 Was the measured optical power within the limits?

IF...	THEN...
YES(OC 192 input level equals −17.0)	Continue with Step 15.
NO	Continue with Step 11.

11 Clean the incoming fiber jumper. For help, refer to "DLP-510: Inspect and Clean Optical Fiber Connectors".

12 Verify that the input LBO attenuation is as rated. For help, refer to "DLP-512: Install/Remove Lightguide Buildout".

13 Reconnect the incoming fiber jumper to the correct OTUD IN port.

14 Is the TCA alarm condition cleared?

IF...	THEN...
YES	***STOP! YOU HAVE COMPLETED THIS PROCEDURE.***
NO	Continue with Step 15

15 Initiate a Trouble Report to the source of the incoming signal indicating the type of failed condition. If the source of the failed incoming condition returns a Trouble Report indicating "No Trouble Found," then contact the appropriate maintenance support organization for further technical assistance.

END OF STEPS

□

TAP-240: Clear 'Outdated Boot Flash'

Overview

This alarm condition is issued when a circuit pack is first powered up. The circuit pack tries to execute updated bootflash software into the circuit pack memory but has failed. Failure of the software to perform an ungrade boot function requires that the circuit pack be returned to the factory for an upgrade to the circuit pack.

Procedure

1 At the CIT, select **FAULT-NE Condition List** to obtain a report.

2 Using the AID column from the report generated in Step 1, identify the appropriate shelf and circuit pack slot associated with the "Outdated Boot Flash" alarm condition.

3 Remove the appropriate shelf cover. All connections can be accessed from the front. For details, refer to **"DLP-514: Remove and/or Install Circuit Pack"**.

4 Is the circuit pack to be replaced an OA/OTU/OMU/ODU/ORS/WAD circuit pack?

IF...	THEN...
YES	Continue with Step 5.
NO	Continue with Step 7 (if EI, OMON, or SUPVY circuit packs).

CAUTION

SERVICE AFFECTING - Failure to follow instructions in Step 5 could result in service interruption.

5 Notify the person responsible for the optical line or optical channel associated with the service or protection signals assigned to this circuit pack to 1) manually switch the service line or optical channel

to a protection line; and 2) ensure that all protection lines or optical channels that are assigned to this circuit pack are not being used for service. Another option is to restore service on a different Optical Line System or route.

Important! A series number S1:2 is the same series number as S1:4. The "2" and "4" refer to minor changes within Series 1.

6 Obtain the correct replacement circuit pack with the same or a higher series number and install it in place of the circuit pack with the lighted FAULT LED. For help, refer to **"DLP-514: Remove and/or Install Circuit Pack"**.

Important! If replacing a SUPVY circuit pack and a reboot is in progress, do not pull the circuit pack until the reboot has successfully completed.

7 Wait for the time indicated in Table 13-3, "Waiting Times." (These are worst-case times; the alarm may actually clear sooner.)

Important! Replacing the EI circuit pack in either an End Terminal or Repeater will cause the system controller to reboot. Reseating the EI circuit pack in the Repeater will also cause the System Controller to reboot. After replacing an EI circuit pack, the SYstem IDentifier (SYSID) in the Network Service Access Point (NSAP) address will change. The local craft technician should retrieve the new SYSID from the Network Element (e.g., the Repeater) by selecting **CONFIGURATION-Installation Provisioning** to obtain the Installation Provisioning Wizard. Then select 'Next' until the NSAP Address Information window appears and inform the SNMS technician of the new SYSID indicated in that window. After replacing or reseating the EI circuit pack, verify that the system clock is correct. If necessary, reset the system clock.

8 Is the FAULT LED lit on the replacement circuit pack?

IF...	THEN...
YES	Continue with "TAP-108: Address Missing or Incorrect Response".
NO	Continue with Step 9.

9 Is the circuit pack just replaced an OA/OTU/OMU/ODU/ORS or WAD circuit pack?

IF...	THEN...
YES	Continue with Step 10.
NO	Continue with Step 11 (for EI, OMON, or SUPVY circuit packs).

10 Notify the person who is responsible for all affected service protection signals assigned to this OA/OTU/OMU/ODU/ORS/WAD that this Optical Line or Optical Channel can now be returned to service.

11 Reinstall the shelf cover. For help, refer to **“DLP-511: Install/Remove Shelf Cover”**.

12 Did you replace an OA, OMON, or SUPVY circuit pack?

IF...	THEN...
YES	Baseline the replaced circuit pack. For help, refer to **“DLP-529: Baseline Optical Parameters”**.
NO	Continue with Step 13.

13 Is the CR/PROMPT, MJ/DEFERRED, or MN LED lit on the EI circuit pack/User Panel?

IF...	THEN...
YES	Refer to TAP-102: Clear “CR/PROMPT, MJ/DEFERRED, MN LED, or TCA”.
NO	Return the circuit pack removed in Step 6 to the factory for an upgrade. Include with the circuit pack an explanation of what problem occurred with the circuit pack.

14 ***STOP! YOU HAVE COMPLETED THIS PROCEDURE.***

END OF STEPS

Table 13-8 Waiting Times

CP Inserted	Waiting Time (minutes)
EI	15-60
OA	5
ODU	15
OMON	3
OMU	15
ORS	3
OTU	10
SUPVY	10
WAD	1

TAP-241: Clear ’DSA Registration Error’

Overview

This alarm condition is issued when the Network Element has detected invalid or missing data in the various DSA fields.

Procedure

1 At the CIT, select **ADMINISTRATION-Data Communications** menu.

2 In the **ADMINISTRATION-Data Communications** dialog box, the Network Layer tab appears.

3 Verify with the local office records or the system administrator at the Operations Support Center if the information under the DSA name prefix tab is correct.

4 Select **OK**. The changed information appears in the appropriate field of the dialog box.

5 At the CIT, select **FAULT-NE Condition List** to obtain a report.

6 Is the DSA Registration Error alarm condition still listed?

IF...	THEN...
YES	Continue with Step 7.
NO	***STOP! YOU HAVE COMPLETED THIS PROCEDURE.***

7 Initiate a Trouble Report to the responsible Operations Support Center or System Administrator stating an DSA Registration Error alarm condition is still being reported by this network element.

END OF STEPS

□

TAP-242: Clear 'MUX OTU LMI'

Overview

This alarm condition is issued when the sink OTU has detected Loss of Multiframe Indicator (LMI).

Procedure

1 At the CIT, select the **FAULT-NE Condition List** menu.

2 Using the AID column from the report (Step 1), identify the appropriate shelf associated with the alarm condition.

3 Remove the appropriate shelf cover. All connections can be access from the front. For help, refer to "DLP-514: Remove and/or Install Circuit Pack" (14-27).

CAUTION

SERVICE AFFECTING. Step 4 could result in service interruption.

4 Notify the person responsible for the optical line associated with the service or protection signals assigned to this optical multiplex section to: 1) manually switch the service line(s) or channel(s) to a protection line(s); and 2) ensure all protection lines assigned to this OTU are not being used for service.

5 Obtain a replacement OTU circuit pack with the same or higher series number and install it in the place of the OTU circuit pack associated with the alarm condition. For help, see "DLP-514: Remove and/or Install Circuit Pack" (14-27).

6 At the CIT, select **FAULT-NE Condition List** to obtain another report, as in Step 1.

7 Is the same failure condition still listed?

IF...	THEN...
YES	Continue with Step 8.
NO	Continue with Step 11.

8 Remove the replacement circuit pack (installed in Step 5) and reinstall the original circuit pack. For help, refer to "DLP-514: Remove and/or Install Circuit Pack" (14-27)

9 Initiate a Trouble Report to the responsible Operations Support Center or System Administrator indicating the type of trouble that is still being reported by this network element and request that the transmit OTU be replaced.

10 Did the source of the failed signal return a trouble Report indicating "No Trouble Found"?

IF...	THEN...
YES	Contact the appropriate maintenance support organization for further technical assistance.
NO	Continue with Step 11.

11 Notify the person responsible for the optical line or channel associated with the service or protection signals assigned to this optical multiplex section that the section can be returned to service.

12 Reinstall the shelf cover. For help, refer to "DLP-511: Install/Remove Shelf Cover" (14-19).

13 ***STOP! YOU HAVE COMPLETED THIS PROCEDURE.***

END OF STEPS

□

14 Detail Level Procedures

Overview

Purpose This chapter, ***Detail Level Procedures (DLP)*** contains detailed ″how to″ instructions, beginning with "DLP-501: Connect and Condition Craft Interface Terminal (CIT)" (14-4).

Important! Before attempting any detail level procedures, refer to Table 14-1, "Detail Level Procedure Index" (14-2) for a list of all detail level procedures and the **correct order** in which to perform these tasks.

□

IXL-001: Detail Level Procedures Index

Detail Level Procedures Index

Refer to Table 14-1, "Detail Level Procedure Index" (14-2) for a list of all Detail Level Procedures.

Table 14-1 Detail Level Procedure Index

Task Description	Procedure
Connect and Condition Craft Interface	"DLP-501: Connect and Condition Craft Interface Terminal (CIT)" (14-4)
Test LEDs on Front Panel and Circuit	"DLP-502: Test LEDs on Circuit Packs" (14-6)
Verify WaveStar® OLS 1.6T System Elements are Connected	"DLP-506: Verify WaveStar® OLS 1.6T Elements Are Connected " (14-8)
Identify Source of Incoming Signal	"DLP-507: Identify Source of Incoming Signal " (14-9)
Install/Remove Apparatus Blank	"DLP-509: Install/Remove Apparatus Blank" (14-10)
Inspect and Clean Optical Fibers and Connectors	"DLP-510: Inspect and Clean Optical Fiber Connectors" (14-11)
Install/Remove Shelf Cover	"DLP-511: Install/Remove Shelf Cover " (14-19)
Install/Remove Lightguide Buildout	"DLP-512: Install/Remove Lightguide Buildout" (14-23)
Install/Remove Circuit Pack	"DLP-514: Remove and/or Install Circuit Pack" (14-27)
Inspect Optical Fiber(s)	"DLP-517: Inspect Optical Fiber(s) " (14-40)
Initiate or Terminate Login Session to a \Network Element Using WaveStar® OLS 1.6T CIT	"DLP-518: Initiate or Terminate Login Session to a Network Element Using WaveStar® OLS 1.6T CIT" (14-41)
Modify, Disable, Enable or Add a User's Login or Password	"DLP-519: Modify, Disable, Enable or Add a User's Login and/or Password" (14-43)
Replace Power Line Filter	"DLP-522: Replace Power Line Filter" (14-47)
Connect Optical Power Meter for Measurement at OTU	"DLP-524: Connect Optical Power Meter for Measurement at OTU () IN () Port" (14-49)
Inspect/Replace Dust Filter	"DLP-526: Inspect/Replace Dust Filter" (14-54)

Table 14-1 Detail Level Procedure Index (continued)

Task Description	Procedure
Replace Fan Assembly	"DLP-527: Replace Fan Assembly" (14-56)
LBO Applications	"DLP-528: LBO Application" (14-57)
Baseline Optical Parameters	"DLP-529: Baseline Optical Parameters " (14-72)
DCM LBO Procedure Packaging for Returns Procedure	"DLP-530: DCM LBO Procedure" (14-84)

DLP-501: Connect and Condition Craft Interface Terminal (CIT)

Overview

This procedure provides instructions to verify proper connections between a network element and a personal computer (PC). The PC will be running WaveStar® OLS 1.6T CIT software.

Procedure

Important! The PC must meet the minimum personal computer requirements stated in the ″Craft Interface Terminal″ part of *WaveStar® OLS 1.6T Applications Planning Guide*, (365-575-786).

Important! The warning message **NE not responding** can be caused by user being logged out due to inactivity. Initiate a new login session. For details, use this procedure if logging in locally, go to "DLP-518: Initiate or Terminate Login Session to a Network Element Using WaveStar® OLS 1.6T CIT" (14-41).

1 Verify the PC is safely positioned on a cart or table.

2 Verify the cable connections at the PC. Reference: *WaveStar® OLS 1.6T Installation Guide (*, 365-575-763).

3 To summarize, check the following:

- The appropriate interface cable is connected between the ***CIT*** connector on the EI circuit pack and a serial connector on the PC.
- If required, a printer with the appropriate printer cable is connected to the PC per the instructions provided with the printer.

4 Turn the PC power switch to ″on,″ if necessary.

Important! See the CIT tutorial available on the WaveStar® OLS 1.6T CD-ROM for examples of screens showing a successful login session.

5 Double-click on the WaveStar® OLS 1.6T CIT icon.

6 Click on the folder labeled **Most Recent** or **Saved View**.

7 Is the desired TID displayed?

IF...	THEN...
YES	Select the TID with the mouse pointer and double click.
NO	Go to the *WaveStar® Optical Line System (OLS) 1.6T Software Release Description*, (C109154401), section ″TID Address Mapping,″ to establish a new TID.

8 Type your assigned User ID and press the **Tab** key to advance to the next field.

9 Type your assigned password and click on **OK**.

END OF STEPS

□

DLP-502: Test LEDs on Circuit Packs

Overview Use the procedure below to test the LEDs on the circuit pack faceplates.

Procedure

1 Remove the appropriate shelf cover(s). All LEDs are visible from the front. For details, go to "DLP-511: Install/Remove Shelf Cover" (14-19).

2 At the CIT, select **FAULT-Test-LED** then select the appropriate bay and shelf, then click on the select button.

Important! ***Requirement:*** All LEDs are lighted for 10 seconds, off for 10 seconds for each iteration, then they return to their normal condition.

3 Select the number of iterations and then click on the Start button.

4 Did the LED(s) of interest operate as indicated above?

IF...	THEN...
YES	Continue with Step 5
NO	Continue with Step 7

5 Reinstall the shelf cover(s). For details, go to "DLP-511: Install/Remove Shelf Cover" (14-19).

6 ***STOP! YOU HAVE COMPLETED THIS PROCEDURE.***

7 At the CIT, select **FAULT-Test-LED** then select the appropriate bay, shelf, and select 3 iterations for the test.

8 Did the same circuit pack LED consistently fail the LED test?

IF...	THEN...
YES	Continue with Step 9
NO	Continue with Step 10

9 Contact the appropriate maintenance organization to correct the LED trouble before returning to this procedure.

10 Reinstall the shelf cover(s). For details, go to "DLP-511: Install/Remove Shelf Cover" (14-19).

END OF STEPS

□

DLP-506: Verify WaveStar® OLS 1.6T Elements Are Connected

Overview This procedure is used to verify that all network elements are connected.

Procedure

1 At the CIT, click on the **FAULT-NE Condition List** icon to obtain a report.

2 Are there any trouble conditions listed in the ***DESCRIPTION*** column of the report?

IF...	THEN...
NO	Continue with Step 3.
YES	Notify the installation personnel to correct the trouble condition before proceeding.

3 Repeat Step 1 and Step 2 for each network element in the system. For details, go to "DLP-518: Initiate or Terminate Login Session to a Network Element Using WaveStar® OLS 1.6T CIT" (14-41).

4 At the CIT, select **VIEW-Rings-OLS Ring Map** command to obtain a report.

5 Verify the report information agrees with the local engineering documentation.

END OF STEPS

□

DLP-507: Identify Source of Incoming Signal

Overview

You were sent to this procedure to identify the signal source associated with an incoming signal condition so that you can issue a Trouble Report to the personnel at that location.

`Incoming HSBB LOL failure`

`Incoming HSBB LOS failure`

`Incoming OCH 10G LOF failure`

`Incoming OCH 10G LOS failure`

`Incoming OC-48/STM-16 LOF failure`

`Incoming OC-48/STM-16 LOS failure`

`Incoming OC-192/STM-64 LOF failure`

`Incoming OC-192/STM-64 LOS failure`

`Incoming optical line LOS (loss of signal)`

`Incoming SUPVY channel fail`

Procedure

Important! The source of the incoming signal condition is the upstream network element in the direction of the incoming signal. For example, with **AID 4-2-5 IN-2, INCOMING OC-48 LOS**, the incoming LOS appears on Bay 4, Shelf 2, Slot 5, Port IN-2.

1 From office records, determine the location of the upstream network element and send a Trouble Report to the personnel responsible for maintaining that site.

2 STOP! YOU HAVE COMPLETED THIS PROCEDURE.

END OF STEPS

□

DLP-509: Install/Remove Apparatus Blank

Overview This procedure describes how to install or remove an apparatus blank.

Procedure

1 Is an apparatus blank to be installed or removed?

IF...	THEN...
To be ***installed***	Continue with Step 2.
To be ***removed***	Continue with Step 5.

2 Position the apparatus blank vertically with its extended release tabs facing towards you.

3 Insert the apparatus blank into the circuit pack slot and push it in until the upper and lower release tabs snap onto the shelf cross-support channels.

4 STOP! YOU HAVE COMPLETED THIS PROCEDURE.

5 Push down on the upper release tab and pull up on the lower release tab to release the apparatus blank from the shelf cross-support channels.

6 Slide the apparatus blank from the slot.

END OF STEPS

□

DLP-510: Inspect and Clean Optical Fiber Connectors

Overview

This procedure is used to inspect and clean the optical connectors used in an optical line system. All unused fiber connectors and optical ports must have dust caps at all times to prevent contamination. This minimizes the cleaning effort. Proper inspection and cleaning will eliminate exposure to dirt that may cause permanent damage to the connectors.

Connectors can be damaged when they are engaged or disengaged while significant optical power (greater than 3.0 dBm) is present in the connection. Connectors can also be damaged when they are cleaned while optically powered. Do not engage or disengage connectors while they maintain a significant optical power and do not attempt to clean optically powered connectors.

Once a connector has been permanently damaged, no amount of cleaning will rectify it. A damaged connector is suspected, despite rigorous cleaning, when power remains low in the system. Therefore, proper cleaning is especially critical in high power systems. Typically, both mating ends of the connection is damaged. In the event that damage occurs while engaging or disengaging connectors while significant power is present, the damaged jumper cable and circuit pack should be replaced.

CAUTION

SERVICE AFFECTING - This procedure could result in service interruption.

The following equipment is required:

- CLETOP Cleaning Cassette Type A (Comcode 901375154) or Type B
  - Replacement Reel for CLETOP Cleaning Cassette Type A (comcode 901375014)
  - Replacement Reel for CLETOP Cleaning Cassette Type B
- Individual Pre-saturated Alcohol Wipes - Tech Spray brand, 99% pure anhydrous Isopropyl alcohol (comcode 901375147)

- Optical Fiber Scope, Noyes OFS 300-200X (Comcode 408197028, used for ST, SC, FC, and LC type connectors)
- 1.25 mm (LC) Adapter Cap for Noyes OFS 300-200X (Comcode 408197069)
- 2.50 mm (ST, SC, FC) Adapter cap for Noyes OFS 300-200X (Comcode 408197044).

Important! All optical fiber connectors (*ST*®,SC, FC, and LC types) should be subjected to this procedure before making initial connections or reconnections per the following instructions. Only the connectors being assembled at this particular time should be subjected to this procedure. To prevent contamination, keep all dust caps and plugs in place on the fiber connectors as well as on the lightguide buildouts until it is time to make connections. After cleaning is complete and contamination is suspected, discard lightguide buildouts and/or connectors and replace them with new parts before making fiber connections.

Cleaning Connectors on Optical Jumpers and Pigtails

1 Remove (if necessary) optical connector from lightguide buildout/optical port or remove (if necessary) dust cap from the optical connector. Make sure there is no optical signal present on the optical connector by using an optical power meter or by disconnecting the other end of the fiber.

WARNING

Disconnected or separated optical connectors may emit invisible laser radiation. Do not view the lightwave beam with the naked eye or with an optical instrument. Avoid direct exposure to the beam.

2 Verify clean connector by using an appropriate microscope.

1. Make sure that the viewing area of the microscope itself is free of any spots that might be confused with the spots from a contaminated connector. To verify, look into the microscope eyepiece from a distance of 1 inch without a connector attached to it. The white background displayed by the eyepiece of a clean microscope will be free of black spots and/or rings around its periphery.
2. Attach the connector into the microscope.
3. Look for a clean white ferrule tip with a dark circle in the center (fiber cladding and core) by adjusting the focus setting on the microscope. The image on the microscope for a clean connector will be free of any spots, streaks, and fiber particles as shown in Figure 14-1, “Image of Clean Connector” (14-14).
   However, not all connectors may appear perfectly clean even after implementing this cleaning procedure due to permanent features on the connector (fixed particles, ceramic voids, cracks, chips, and other surface irregularities). Refer to Figure 14-2, “Acceptability Criteria for Single Mode and Multimode Fibers” (14-17) to determine that the permanent features on the connector satisfy the visual inspection criteria. If the visual inspection criteria are not satisfied, then the connector is ***not*** clean and should not be used.

TIP: If spots, streaks and fiber particles are observed, it is important to confirm that they are on the connector, and not part of the microscope. Contamination on the connector can be verified by slowly disconnecting the connector while viewing it through the microscope and verifying that the spots, streaks, and fiber particles fade away as the connector is removed from the microscope. If the microscope is contaminated, then replace it with a clean microscope and service the contaminated microscope.

Figure 14-1 Image of Clean Connector

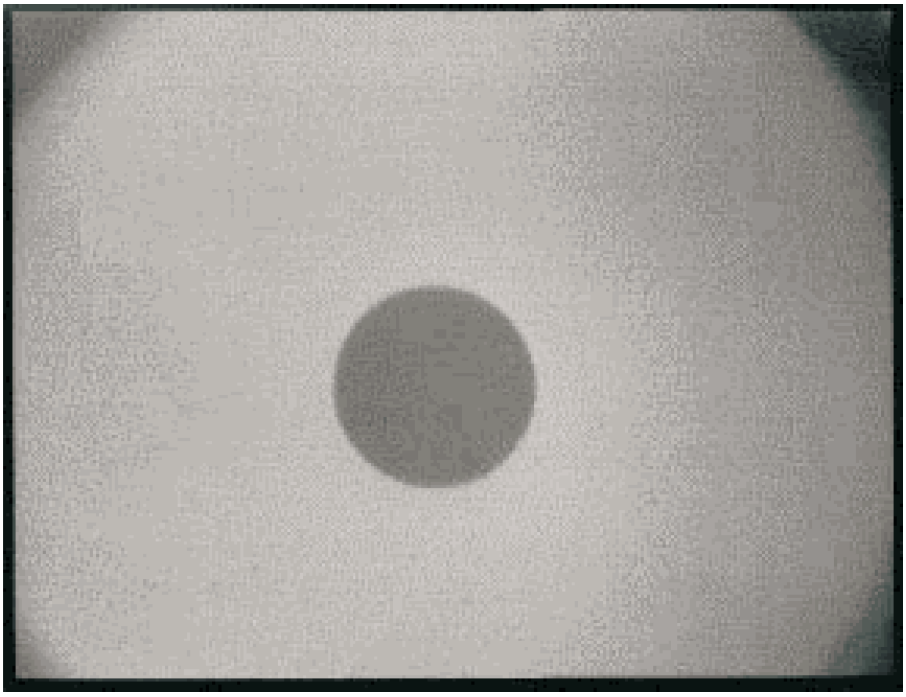

3 Does the connector satisfy the Figure 14-2, "Acceptability Criteria for Single Mode and Multimode Fibers" (14-17) visual inspection criteria?

IF...	THEN...
YES	Continue with Step 15.
NO	Continue with Step 4.

4 Hold the CLETOP Reel Type A or B cleaner in the palm of one hand with the cleaning side facing you.

5 Press the lever with the thumb of the same hand all the way down and hold. Do not release the lever.

6 While keeping the lever held down with one hand, use the other hand to press the optical ferrule endface against the cleaning cloth in any one slot and uniformly drag it in the direction indicated by the arrows on the cleaner. Note that the CLETOP Reel Type B has only one slot. Make sure that the endface is in contact with the cleaning cloth at all times, and that uniform force is used while dragging it.

7 Rotate the connector 90 degrees.

8 Press the ferrule endface against the cleaning cloth in the other slot for CLETOP Reel Type A or in the same slot for CLETOP Reel Type B and uniformly drag it in the direction indicated by the arrows on the cleaner. Make sure that the endface is in contact with the cleaning cloth at all times, and that uniform force is used while dragging it.

9 Release the lever and allow it to return to its initial position.

10 Verify clean connector by using an appropriate microscope as described in Step 2.

11 Does the connector satisfy the Figure 14-2, “Acceptability Criteria for Single Mode and Multimode Fibers” (14-17) visual inspection criteria?

IF...	THEN...
YES	Continue with Step 15.
NO	Continue with Step 12.

CAUTION

Alcohol is flammable and is harmful if swallowed, inhaled, or absorbed through the skin. Keep alcohol away from heat, sparks, or flame. Avoid contact with eyes, skin and clothing.

12 Open an individual foil packet of pre-saturate alcohol wipe. Grasp the connector housing and place the connector ferrule endface perpendicular to the alcohol wipe. Drag it against the wipe three times in a figure eight pattern while maintaining uniform pressure. Do not use pre-saturated alcohol wipes other than the type specified in this procedure. Make sure that the pre-saturated alcohol wipe is resting on an unyielding surface while wiping the ferrule tip. Discard pre-saturated alcohol wipe in an appropriate manner when finished.

13 Repeat Step 4 through Step 10.

14 Does the connector satisfy the Figure 14-2, "Acceptability Criteria for Single Mode and Multimode Fibers" (14-17) visual inspection criteria?

IF...	THEN...
YES	Continue with Step 15.
NO	Then repeat Step 12. If the connector remains dirty after Step 12 as been implemented twice, then discard the jumper.

15 After the connector has been verified to be clean, it should be immediately inserted into the optical port. If the connector is not going to be used, then it must be protected with a clean dust cap. When this connector is to be used, it should be subjected to this procedure again prior to mating it into an optical port.

END OF STEPS

Definitions

Figure 14-2 Acceptability Criteria for Single Mode and Multimode Fibers

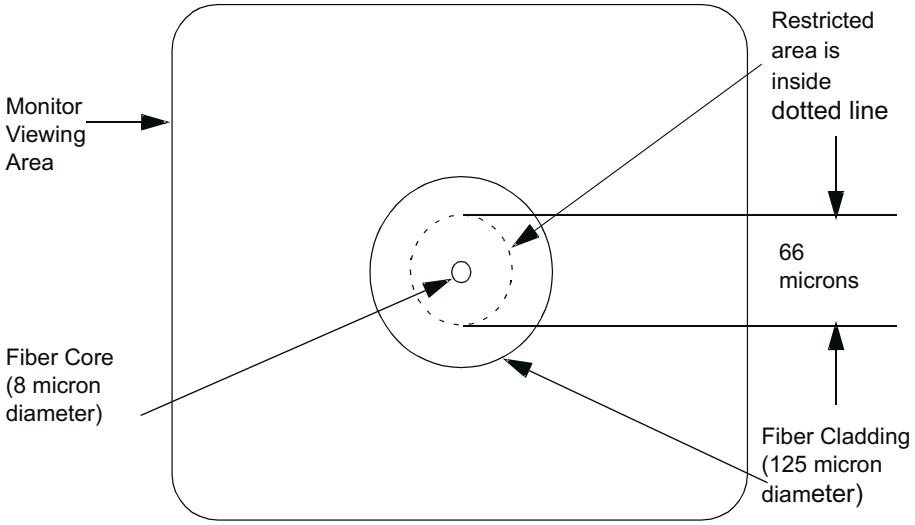

Restricted Area: A circle with a diameter of 66 microns centered on the fiber core. This diameter is equal to half the sum of the single mode fiber core and fiber cladding diameters.

Fixed Contamination: Contamination that cannot be removed, and does not change appearance or location, during or after three cleaning attempts.

Loose Contamination: Contamination that can move or change position on the fiber Ferrule Endface. This contamination can be removed in three (or fewer) cleaning attempts.

Fiber Cladding: This is the large dark circle near the center of the viewing area. This is the outermost region of the end of the glass fiber.

Fiber Core: In single mode fibers, this appears as a small white circle near the center of the Viewing area (in multimode fibers, this circle is much larger). The core may be found at the center of the Fiber Cladding, which appears as a larger circle. The single mode fiber core is approximately 8 microns in diameter and the cladding is approximately 125 microns in diameter.

Ferrule Endface: This appears as a light colored area that surrounds the entire Fiber Cladding region. This area may sometimes look rough

or ″pebbled,″ but must be uniform in appearance. The Ferrule Endface fills the entire viewing area outside of the Fiber Cladding.

Cleanliness Requirements

- No ***loose*** contamination or particulate matter of any size is allowed in Viewing Area.
- No contamination, chips, or cracks of any size are allowed with the Restricted Area.
- Fixed Contamination is allowed ***only*** if it is smaller than the single mode Fiber Core diameter (8 microns), ***and*** is located outside of the Restricted Area, ***and*** it cannot be moved or removed in three cleaning attempts.
- Scratches are acceptable***only*** if they do not go through the core and are less than 2 microns in width.

□

DLP-511: Install/Remove Shelf Cover

Overview This procedure describes how to install or remove a shelf cover.

CAUTION

Use a static ground wrist strap whenever handling circuit packs or working on a WaveStar® OLS 1.6T system network element to prevent electrostatic discharge damage to sensitive components. See "Electrostatic Discharge (ESD) Considerations" (13-3) in "TAP-100: Technical Assistance" (13-3).

Procedure

1 Is the cover to be installed/removed a shelf cover or interconnect panel cover?

IF...	THEN...
shelf	Continue with Step 2.
interconnect panel cover	Go to Step 6 of **"Install Cover " (14-20)**, later in this procedure.

2 Locate the appropriate shelf cover.

3 Is the cover being installed or removed?

IF...	THEN...
removed	Go to Step 1 of **"Remove Cover " (14-20)**, later in this procedure.
installed	Go to Step 1 of **"Install Cover " (14-20)**, later in this procedure.

END OF STEPS

Remove Cover

1 At the top of each cover, locate the 1/4 turn screw, which is part of the latch assembly.

2 Using an appropriate screwdriver, rotate the 1/4 turn fasteners counterclockwise 90 degrees to unlock each latch handle.

3 Pivot each latch handle so it is perpendicular to the front face of the cover.

4 Pull on the latch handles to open the cover.

5 Lift the cover and push back slightly, lift up the cover to disengage the pins from the metal tabs on the shelf framework, then lift the cover up until it is free from the shelf framing.

END OF STEPS

Install Cover

1 Position the cover horizontal to the shelf framework, slide the pivot pins in slightly and rotate the bottom of the cover down to engage the metal tabs on the shelf framework.

2 Make sure the cover latch handles have been pivoted so they are perpendicular to the front face of the cover. Make sure the 1/4 turn fasteners are rotated to the full counterclockwise position.

CAUTION

Make sure that the cover is flush with the face of the bay before attempting to secure the fasteners.

CAUTION

Be careful not to damage or crush the fibers while installing the shelf cover.

3 Close the cover and rotate the latch handles flush with the cover. Then, using a flat-blade screwdriver, rotate the 1/4 turn fasteners clockwise approximately 90 degrees.

4 Using an appropriate screwdriver, rotate the 1/4 turn screw clockwise 90 degrees to lock the latch handle.

5 ***STOP! YOU HAVE COMPLETED THIS PROCEDURE.***

6 Is the cover being installed or removed?

IF...	THEN...
removed	Continue with Step 7.
installed	Continue with Step 11.

7 Locate the screw in the middle of the upper edge.

8 Using an appropriate screwdriver, turn the screw counter-clockwise until screw threads are disengaged.

9 Grasp cover by upper corners, pull forward and lift up to remove cover.

10 ***STOP! YOU HAVE COMPLETED THIS PROCEDURE.***

11 Grasp cover by upper corners.

12 Place bottom of cover into lower rail of interconnect panel and push closed.

13 Using an appropriate screwdriver, turn clockwise until screw engages frame.

END OF STEPS

□

DLP-512: Install/Remove Lightguide Buildout

Procedure

WARNING

Unterminated optical connectors may emit invisible laser radiation. Eye damage may occur if beam is viewed directly or with improper optical instruments. Avoid direct exposure to beam.

CAUTION

Use a static ground wrist strap whenever handling circuit packs or working on a WaveStar OLS 1.6T User/Service Manual (U/SM) network element to prevent electrostatic discharge damage to sensitive components.

Important! Refer to the chapter Orderable Equipment - Comcodes by Item Name, or Orderable Equipment by Comcode, in the *WaveStar® OLS 1.6T Applications and Planning Guide,* (365-575-786) for the values of LBOs.

1 Is the buildout being installed or removed? For details, see Figure 14-3, "Duplex LC block and Connector" (14-25) and Figure 14-4, "Simplex LC Block and Connector" (14-26)

IF...	THEN...
installed	Go to "Install Buildout " (14-24), later in this procedure.
removed	Go to "Remove Buildout" (14-24), later in this procedure.

END OF STEPS

Install Buildout

1 Remove the protector caps and plugs (if equipped) from the buildout and buildout block and store them in a clean container.

2 Align the buildout with the slot in the buildout block, push in until it locks into position.

END OF STEPS

Remove Buildout

CAUTION

Locking tab must only be pushed along a line perpendicular to buildout body in direction towards the buildout in order to avoid damage to the locking beam.

1 Depress the locking tab on the buildout and separate from the buildout block by sliding apart.

END OF STEPS

Figure 14-3 Duplex LC block and Connector

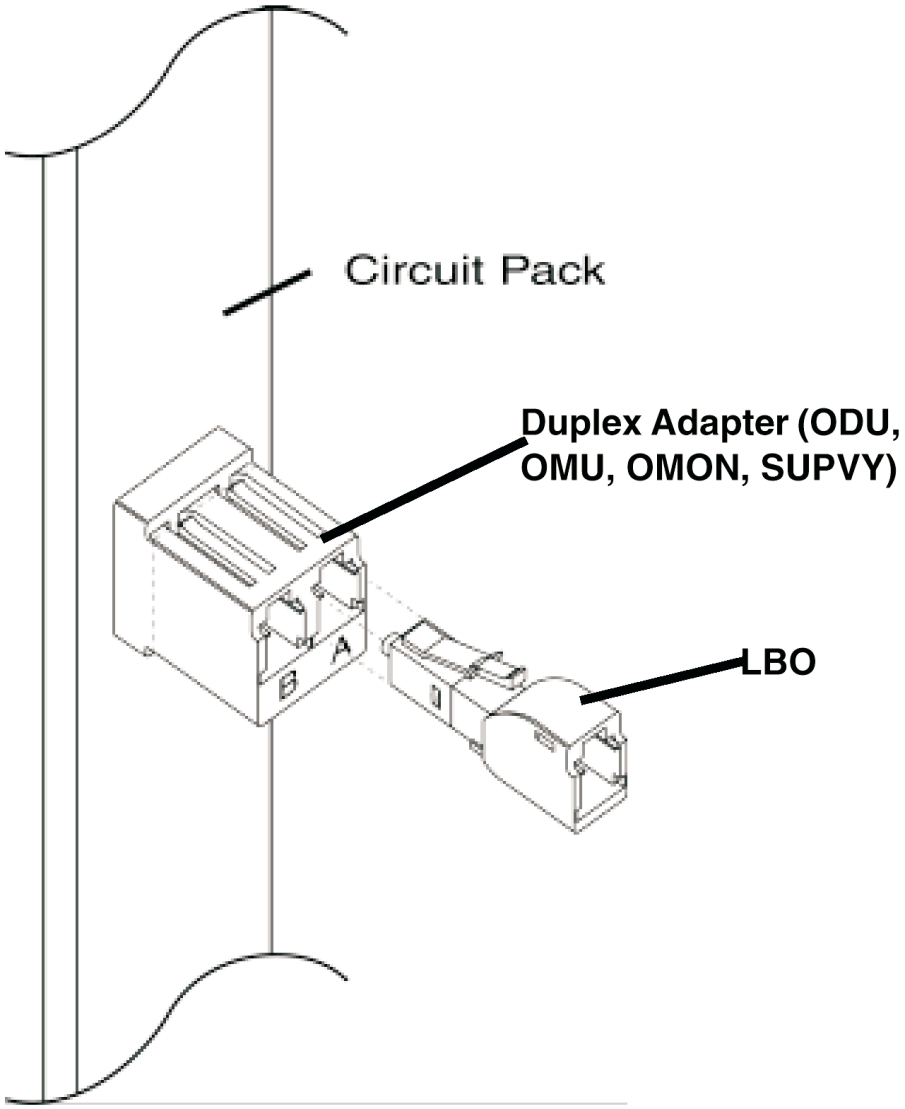

Figure 14-4 Simplex LC Block and Connector

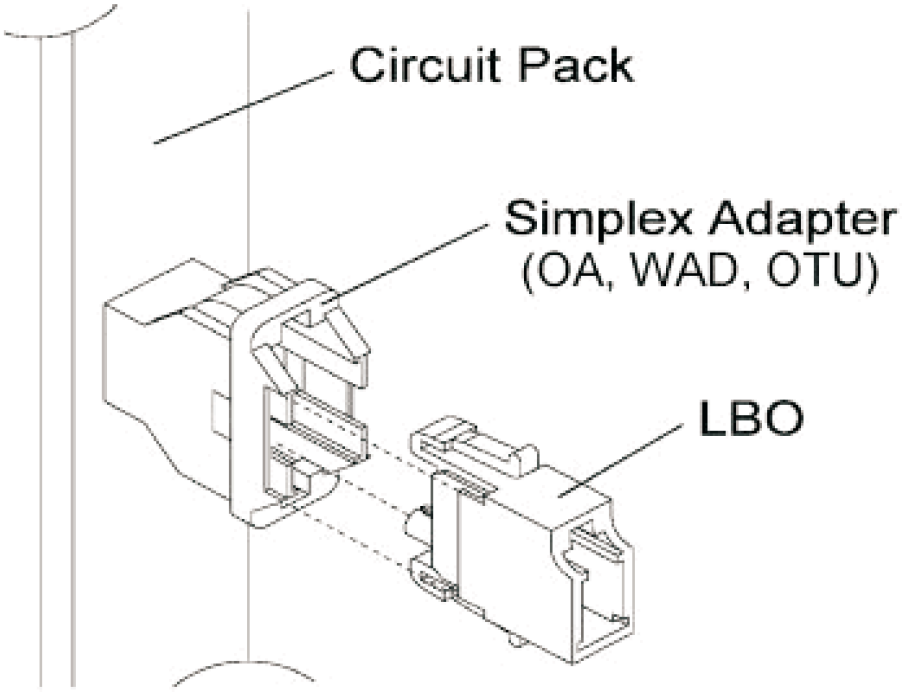

□

DLP-514: Remove and/or Install Circuit Pack

Overview

This procedure describes how to install and/or remove circuit packs or apparatus units.

Refer to the *WaveStar® OLS 1.6T Installation Manual*, (365-575-790) and office records to identify pre-installed and labeled fibers in the bay that connect to various circuit pack slots or apparatus unit slots.

CAUTION

During initial software installation and when circuit packs are inserted into a running system, there will be an automatic upgrade of the firmware on the circuit packs to the latest version. Flashing green LEDs on the circuit pack faceplates will indicate that the upgrade is occurring (typically less than 30 seconds). Please DO NOT remove the circuit pack during this upgrade because it may cause damage to the affected pack. After the pack LEDs stop flashing it is then safe to remove the packs or power down the system as needed.

CAUTION

Use a static ground wrist strap whenever handling circuit packs or working on a WaveStar® OLS 1.6T network element to prevent electrostatic discharge damage to sensitive components.

Important! When removing and inserting circuit packs, keep the pack out of the slot for 60 seconds.

Procedure

Important! Verify that all fibers are labeled to prevent possible service interruption.

1 What type of circuit pack, CLSC or DCM apparatus unit, is being removed and/or installed?

IF...	THEN...
ODU or WAD	Continue with Step 2.
OA, OMON, OMU, ORS, OTU, SUPVY	Continue with Step 4.
BOS or ***EI***	Go to "Remove BOS or EI circuit pack." (14-33), later in this procedure.
BOS-SYSCTL	Go to "BOS-SYSCTL circuit pack " (14-34), later in this procedure.
DCM	Go to "Remove/Install a DCM apparatus unit" (14-36), later in this procedure.
CLSC	Go to "Remove/Install a CLSC Apparatus Unit" (14-37), later in this procedure.

2 Before disconnecting any fiber jumpers, locate the OA that is connected to the IN port of the failed ODU or WAD circuit pack. The Receive OA should be located in 1–1–5 (Bay, Shelf, Slot). However, verify this by checking the fiber designation tags wrapped around the fiber.

3 Disengage the OA circuit pack identified in Step 2 from the shelf as follows: Push up on the bottom and down on the top locking clips to unlock the circuit pack latches. Disengage the circuit pack by carefully and continuously pulling out equally on the top and bottom latches. Continue with Step 4.

4 Are you to remove or install an ***OA, ODU, OMON, OMU, ORS, OTU, SUPVY, or WAD*** circuit pack?

IF...	THEN...
remove	Go to "Remove an OA, ODU, OMON, OMU, ORS, OTU, SUPVY, or WAD circuit pack" (14-29).
install	Go to "Install an OA, ODU, OMON, OMU, ORS, OTU, SUPVY, or WAD circuit pack" (14-30)

END OF STEPS

WARNING

Unterminated optical connectors may emit invisible laser radiation. Eye damage may occur if beam is viewed directly or with improper optical instruments. Avoid direct exposure to the beam.

Remove an OA, ODU, OMON, OMU, ORS, OTU, SUPVY, or WAD circuit pack

1 Disengage the circuit pack from the appropriate shelf as follows:

1. Push up on the bottom and down on the top locking clips to unlock the circuit pack latches.
2. Disengage the circuit pack by carefully and continuously pulling out equally on the top and bottom latches.
3. Remove the fiber(s) from the appropriate port(s) listed for the circuit pack(s) in Table 14-2, "Circuit Packs/Apparatus Units and Ports" (14-38).
4. Drape the removed fibers so as not to interfere with the circuit pack(s) removal.
5. Carefully slide the circuit pack out of the slot guides to remove it from the shelf. DO NOT ROCK THE CIRCUIT PACK BACK AND FORTH.

2 Are you to install another circuit pack in this slot?

IF...	THEN...
YES	Go to Step 2 of "Install an OA, ODU, OMON, OMU, ORS, OTU, SUPVY, or WAD circuit pack" (14-30).
NO	Continue with Step 3

Important! When a slot has no circuit pack in place an apparatus blank must be installed in lieu of the circuit pack to provide the correct level of cooling.

3 Install an apparatus (circuit pack) blank(s) in the slot(s). For details, go to "DLP-509: Install/Remove Apparatus Blank" (14-10).

4 Remove any LBOs from the circuit pack removed in Step 1 and store for future use.

END OF STEPS

Install an OA, ODU, OMON, OMU, ORS, OTU, SUPVY, or WAD circuit pack

1 If required, remove the apparatus (circuit pack) blank from this slot. For details, go to "DLP-509: Install/Remove Apparatus Blank" (14-10).

2 Obtain a circuit pack with the same or higher series number, or if adding channel as required per circuit order.

3 Open both latches on the circuit pack.

4 Place the circuit pack into the slot guides and slowly slide it into the shelf until the latches touch the shelf. ***DO NOT ROCK THE CIRCUIT PACK BACK AND FORTH.***

5 Was an OTU installed?

IF...	THEN...
YES	Go to Step 6.
NO	Go to Step 9

6 With a thumb on each latch, continue sliding the circuit pack with one firm, continuous motion until the latches are fully engaged and the clips are in the locked position.

7 Is this a new or replacement OTU?

new	Go Step 8.
replacement	Go to Step 10.

8 At the CIT, select **CONFIGURATION-Circuit Connections** and use the circuit connection wizard to add the required associations for the circuit pack being added.

9 Was an OA installed?

IF...	THEN...
YES	Go to Step 10.
NO	Go to Step 11 (for ODU, OMON, OMU, ORS, OTU, SUPVY, or WAD).

10 Determine the required LBO. For details, go to "DLP-528: LBO Application" (14-57).

11 Clean the optical fiber(s) and connector(s). For details, go to "DLP-510: Inspect and Clean Optical Fiber Connectors" (14-11).

12 Connect the optical fiber(s) to the required ports. For details, go to Table 14-2, "Circuit Packs/Apparatus Units and Ports" (14-38).

13 Dress the fiber(s) at the slot guide to ensure fiber(s) do not interfere with the circuit packs insertion.

14 Was an OTU installed?

IF...	THEN...
YES	***STOP! YOU HAVE COMPLETED THIS PROCEDURE.***
NO	Go to Step 15 (for OA, ODU, OMON, OMU, ORS, SUPVY, or WAD).

15 With a thumb on each latch, continue sliding the circuit pack with one firm, continuous motion until the latches are fully engaged and the clips are in the locked position.

16 Was an ODU or WAD installed?

IF...	THEN...
YES	Go to Step 17.
NO	Go to Step 18 (for OA, OMON, OMU, ORS, SUPVY)

17 Reseat the OA associated with the installed ODU or WAD circuit pack.

18 Was an OMU installed?

IF...	THEN...
YES	Go to Step 19.
NO	***STOP! YOU HAVE COMPLETED THIS PROCEDURE.***

19 Determine the required LBO. For details, go to "DLP-528: LBO Application" (14-57).

END OF STEPS

Remove BOS or EI circuit pack.

CAUTION

Do not remove the BOS circuit pack in the SYSCTL slot unless instructed to do so by the procedure that sent you here. If the BOS circuit pack is removed from the SYSCTL slot, provisioning data will be lost from the SYSCTL but will be retained by the FLASH Memory Module that you removed in the procedure that sent you here.

1 Are you to remove or install a BOS or EI circuit pack?

IF...	THEN...
remove	Continue with Step 2.
install	Go to "Install BOS or EI circuit pack " (14-34), later in this procedure.

2 Disengage the circuit pack from the appropriate shelf as follows:

1. Push up on the bottom and down on the top locking clips to unlock the circuit pack latches.
2. Disengage the circuit pack by carefully and continuously pulling out equally on the top and bottom latches.
3. Carefully slide the circuit pack out of the slot guides to remove it from the shelf. DO NOT ROCK THE CIRCUIT PACK BACK AND FORTH.

END OF STEPS

Install BOS or EI circuit pack

1 Install the circuit pack as follows:

1. Open both latches on the circuit pack.
2. Place the circuit pack into the slot guides and slowly slide it into the shelf until the latches touch the shelf. DO NOT ROCK THE CIRCUIT PACK BACK AND FORTH.
3. With a thumb on each latch, continue sliding the circuit pack with one firm, continuous motion until the latches are fully engaged and the clips are in the locked position.

END OF STEPS

BOS-SYSCTL circuit pack

1 Are you ready to remove or install a BOS-SYSCTL circuit pack?

IF...	THEN...
remove	Continue with "Remove a BOS-SYSCTL circuit pack " (14-34).
install	Continue with "Install a BOS-SYSCTL" (14-35).

END OF STEPS

Remove a BOS-SYSCTL circuit pack

1 At the CIT, click on Configuration-Provision.

2 Click on bay, where the BOS ( ) SYSCTL (CP 10) is located.

3 Click on shelf, where the BOS ( ) SYSCTL (CP 10)is located.

4 Click on the SYSCTL [(CP10) BOS ( )] circuit pack.

5 Click on the **PROVISION** button.

6 Select **Enable for the FMM Removal**.

7 Click on the **Apply** button.

8 When the FAULT LED flashes, push the eject button above the SYSMEM slot of the SYSCTL circuit pack to eject the FLASH Memory Module from the SYSCTL circuit pack.

9 Disengage the circuit pack from the appropriate shelf as follows:

1. Push up on the bottom and down on the top locking clicks to unlock the circuit pack latches.
2. Disengage the circuit pack by carefully and continuously pulling out equally on the top and bottom latches.
3. Carefully slide the circuit pack out of the slot guides to remove it from the shelf. DO NOT ROCK THE CIRCUIT PACK BACK AND FORTH.

END OF STEPS

Install a BOS-SYSCTL

1 Install the circuit pack as follows:

1. Open both latches on the circuit pack.
2. Place the circuit pack into the slot guides and slowly slide it into the shelf until the latches touch the shelf. DO NOT ROCK THE CIRCUIT PACK BACK AND FORTH.
3. With a thumb on each latch, continue sliding the circuit pack with one firm, continuous motion until the latches are fully engaged and the clips are in the locked position.
4. Insert the FLASH Memory Module (FMM), removed in Step 8 of "Remove a BOS-SYSCTL circuit pack" (14-34) into the SYSMEM slot of the BOS-SYSCTL circuit pack until it is flush with the BOS-SYSCTL circuit pack faceplate.

END OF STEPS

Remove/Install a DCM apparatus unit

1 Identify the correct DCM apparatus unit to be removed.

2 Locate the correct fiber jumpers to the DCM from the assigned OA. Log on a piece of paper the correct jumper assigned to the DCM IN and OUT connections.

3 Remove the fiber jumpers from the IN and OUT connections of the DCM.

4 Drape the removed fibers so as not to interfere with the DCM removal.

5 Loosen the two screws holding the DCM in place by turning them counter clockwise with a flat bladed screwdriver.

6 Remove the defective DCM.

7 Obtain a replacement DCM with the correct DCM series.

8 Orient and insert the new DCM into the shelf tray.

9 Tighten the screws holding the DCM in place by turning the screws clockwise.

10 Clean the optical fibers and connectors. For details, go to "DLP-510: Inspect and Clean Optical Fiber Connectors" (14-11).

11 Reconnect the fibers (removed in Step 3) to the correct IN and OUT connections of the DCM.

END OF STEPS

Remove/Install a CLSC Apparatus Unit

1. Remove the fibers from the appropriate port(s) listed for the apparatus unit in Table 14-2, “Circuit Packs/Apparatus Units and Ports” (14-38).

2. Drape the removed fibers so as not to interfere with the CLSC removal.

3. Push up on the bottom and down on the top locking tabs to unlock the apparatus unit.

4. Carefully slide the apparatus unit out of the slot guides to remove it from the shelf.

5. Obtain a replacement CLSC apparatus unit with the correct CLSC series.

6. Push up on the bottom and down on the top locking tabs to slide the CLSC apparatus unit into the shelf.

7. Clean the optical fibers and connections. For details go to DLP-510: Inspect and Clean Optical Fiber Connectors.

8. Reconnect the optical fibers removed in Step 1 to the required ports.

9. STOP! YOU HAVE COMPLETED THIS PROCEDURE.

END OF STEPS

Table 14-2, “Circuit Packs/Apparatus Units and Ports” (14-38) provides a listing of circuit packs and their respective ports.

Table 14-2 Circuit Packs/Apparatus Units and Ports

Circuit Packs/ Apparatus Units	*Ports*	*Notes*
BOS ( )	SYSMEM	
DCM Apparatus Unit	IN, OUT	
EI1	CIT	
OA1,OA2	IN,OUT,DCM IN,DCM OUT,MON TX,MON RX,OMON, SUP TX, SUP RX	
ODU1	IN,OUT 9190 through OUT 9580,OUT 50G2,OUT 50G3	1
ODU2	IN 50G2,OUT 9190 through OUT 9385	1
ODU3	IN 50G3,OUT 9390 through OUT 9585	1
OMON1	IN 1 through IN 8	
OMU1	IN 9190 through IN 9580, IN 50G, OUT 1, OUT 2	1
OMU2	IN 9195 through IN 9585, OUT 50G	1
ORS	C1 IN, C1 OUT, C2 IN, C2 OUT, 1A IN, 1A OUT, 2A IN, 2A OUT, 1B IN, 1B OUT, 2B IN, 2B OUT, ET1, ET1 OUT	
OTU1	xxxx IN1, xxxx OUT, yyyy IN2, yyyy OUT	2
OTU10	xxxx IN1, xxxx OUT, yyyy IN2, yyyy OUT	2
OTUD1,OTUD2	0001 IN1, 0001 OUT, 0002 IN2, 0002 OUT	

Table 14-2 Circuit Packs/Apparatus Units and Ports (continued)

OTUD10	0001 IN1, 0001 OUT, 0002 IN2, 0002 OUT	
OTU70	OUT xxxx, IN 1234, OUT 1234, IN	
SUPVY()	IN 1, IN 2, OUT 1, OUT 2	
WAD1,WAD2, WAD3, WAD4, WAD5, WAD6	ADD IN, ADD OUT, DROP IN, DROP OUT, LOOP IN, LOOP OUT, wwww IN, xxxx IN, yyyy IN, zzzz IN, wwww OUT, xxxx OUT, yyyy OUT, zzzz OUT	
CLSC Apparatus Unit	IN C, L, OUT C, L, C+L IN, OUT, IN C1, C2, IN L1, L2, OUT C1, C2, OUT L1, L2, C+L1, IN, OUT, C+L2, IN, OUT	

Notes:

1. The 4-digit component of the port name is the same as the middle four digits of the frequency in THz. For example, the ports associated with the 191.950 THz frequency are IN 9195 (on the OMU) and OUT 9195 (on the ODU).
2. xxxx and yyyy are the same as the middle four digits of the frequency in THz. For example, the ports associated with the 191.950 THz frequency are IN 9195 and OUT 9195.
3. wwww, xxxx, yyyy, and zzzz are the same as the middle four digits of the frequency in THz. For example, the ports associated with the 191.950 THz frequency are IN 9195 and OUT 9195.

□

DLP-517: Inspect Optical Fiber(s)

Overview

This procedure is used to correct an input or output fiber problem such as a damaged or disconnected fiber.

Refer to the *WaveStar® OLS 1.6T Installation Manual*, (365-575-790) and office records to identify pre-installed and labeled fibers in the bay that connect to various circuit pack slots.

Procedure

CAUTION

SERVICE AFFECTING - This procedure could result in service interruption.

1. If required, remove the appropriate shelf covers. For details, go to "DLP-511: Install/Remove Shelf Cover" (14-19).

2. Verify the fibers are properly connected.

3. Visually inspect the fiber, starting at the connector on the local network element and going as far as practical (usually to an interconnection bay or to a cross-connect panel).

4. Correct any problems with the fiber, following local procedures.

5. Reinstall the shelf covers. For details, go to "DLP-511: Install/Remove Shelf Cover" (14-19).

END OF STEPS

□

DLP-518: Initiate or Terminate Login Session to a Network Element Using WaveStar® OLS 1.6T CIT

Overview

This procedure is used to initiate or terminate a login session to a network element (NE).

Procedure

1 Are you initiating or terminating a login session?

IF...	THEN...
initiating	Continue with "Initiate a Login Session " (14-41).
terminating	Continue with "Terminate a Login Session " (14-42).

END OF STEPS

Initiate a Login Session

1 If required, connect and condition the craft interface terminal (CIT). For details, go to "DLP-501: Connect and Condition Craft Interface Terminal (CIT)" (14-4).

2 Click on the task bar labeled **WaveStar CIT**.

Important! See the CIT tutorial available on the WaveStar® OLS 1.6T CD-ROM for examples of screens showing a successful login session.

3 Click on the folder labeled **Most Recent** or **Saved View**.

4 Is the desired TID displayed?

IF...	THEN...
YES	Select the TID with the mouse pointer and double click.

IF...	THEN...
NO	1. Click on Saved Views. 2. Click on View 1. 3. Right-click on View 1. 4. Select New 5. Select New NE and click. 6. In the new NE dialog box; enter the required data. 7. Click on OK to create a new TID.

5 Type your assigned User ID and press the tab key to advance to the next field.

6 Type your assigned password and click on **OK**.

END OF STEPS

Terminate a Login Session

1 Click on the task bar labeled with the TID login session to be terminated.

2 At the WaveStar® OLS 1.6T CIT, select **FILE-NE Disconnect** and click on **NE Disconnect**.

END OF STEPS

□

DLP-519: Modify, Disable, Enable or Add a User's Login and/or Password

Overview

This procedure covers login aging and password aging in addition to changing, deleting, or entering a user's login. Additional information about security and aging is provided in ″Security Administration″ (1-1).

Procedure

CAUTION

Privileged users cannot change their own login. (LUC01 and LUC02 are the original super user names.)

1 If required, connect and condition the craft interface terminal (CIT). For details, go to "DLP-501: Connect and Condition Craft Interface Terminal (CIT)" (14-4).

2 If required, initiate a login session with the appropriate network element, refer to "DLP-518: Initiate or Terminate Login Session to a Network Element Using WaveStar® OLS 1.6T CIT" (14-41). You must have an NE login with appropriate UAP (User Access Privilege) to perform these tasks:

IF...	THEN...
adding or modifying a user's login	Continue with "Add or Modify User Login " (14-44).
disabling a user login	Continue with "Disable User Login " (14-44).
enabling a user login	Continue with "Enable User Login " (14-45).
enabling/disabling login aging	Continue with "Enable/Disable Login Aging" (14-45).
enabling/disabling password aging	Continue with "Enable/Disable Password Aging" (14-45).

IF...	THEN...
entering/editing password	Continue with "Enter or Edit Password" (14-46).

END OF STEPS

Add or Modify User Login

1. At the CIT, select **ADMINISTRATION-Security-User Provisioning** and select new user if adding a new user or existing user if modifying user login.

2. Enter the appropriate new or modified user data in the specified fields.

3. Click the **Add** or **Modify** button as appropriate.

END OF STEPS

Disable User Login

1. At the CIT, select **ADMINISTRATION-Security-Disable User Login**.

2. Click on the User Login to be disabled.

3. Click on the **Disable** button.

END OF STEPS

Enable User Login

1 At the CIT, select **ADMINISTRATION-Security-Enable User Login**.

2 Click on the User Login to be enabled.

3 Click on the **Enable** button.

END OF STEPS

Enable/Disable Login Aging

1 At the CIT, select **ADMINISTRATION-Security-Security Provisioning**.

2 Select the appropriate data fields for desired action.

3 Once data has been selected click on the appropriate button.

END OF STEPS

Enable/Disable Password Aging

1 At the CIT, select **ADMINISTRATION-Security-User Provisioning**.

2 In the password aging box select the appropriate data fields for desired action.

3 Once data has been selected click on the appropriate button.

END OF STEPS

Enter or Edit Password

1 At the CIT, select **ADMINISTRATION-Security-User Provisioning**.

2 Select existing User.

3 Enter appropriate password data in Password box fields.

4 Once data has been selected click on the appropriate button.

END OF STEPS

□

DLP-522: Replace Power Line Filter

Overview Follow the procedure below to replace a power line filter.

Procedure

1 Identify the correct power filter to be removed.

Important! Verify that ***all*** –48 fuse/breakers (including any alarm fuses) supplying power to both the **A** and **B** feeds are the correct size and are intact. Using a Multimeter on the Volts setting, measure the voltage across the Main fuse/circuit breaker for ALL A and B feeds to the equipment. If the reading across any breaker/fuse is more than 1V, the supply must be repaired before any Power Filters can be replaced. Refer to the Powering chapter of the WaveStar® OLS 1.6T (400G/800G) Installation Manual for help.

2 Before replacing a failed power filter, verify that a proper ground has been established between the shelf and ground. This is accomplished by measuring the resistance between the −48 V return of the power feed going into the Power filter (return is identified by striping) and the frame ground jack for that particular shelf (use the ESD ground jack for that shelf) using an Analog Volt-Ohm Meter (VOM). The acceptible value is one Ohm or less.

Important! Most digital VOMs will be adversely affected by ground currents/noise and are not a good choice in this measurement.

3 Set the circuit breaker on the replacement filter to the off position.

4 Remove the shelf cover. For details refer to "DLP-511: Install/Remove Shelf Cover" (14-19).

5 If equipped, remove the interconnect panel cover on the power filter shelf. For details, refer to "DLP-511: Install/Remove Shelf Cover" (14-19).

6 Unplug the filters power cable by depressing both tabs at the same time and pulling the connector from the filters socket.

7 Loosen the screw holding the filter to its holding bracket using a flat-bladed screwdriver.

8 Remove the defective filter by sliding it out towards the front of the shelf.

WARNING

When inserting a power filter into the shelf, ensure that the plastic power connector on the filter clears the power filters screw bracket. This will prevent damage to the plastic power connector.

9 Orient and insert the new filter.

10 Using a flat screwdriver, tighten the screw holding the filter into its holding bracket, to ensure proper shelf grounding..

11 Set the circuit breaker on the replacement filter to the off position.

12 Reconnect the power plug to the filters socket (keyed to ensure proper insertion).

13 Set the circuit breaker on the replacement filter to the on position. If the trouble does not clear, contact the appropriate maintenance organization for further technical support.

14 Reinstall shelf covers. For details, refer to "DLP-511: Install/Remove Shelf Cover" (14-19).

END OF STEPS

DLP-524: Connect Optical Power Meter for Measurement at OTU () IN () Port

Overview

This procedure provides tables for determining the correct power level and lightguide buildout (LBO) values for the OTU () IN () port when connected to a WaveStar® OLS 1.6T system terminal or other vendor equipment (Figure 14-5, "Location of LBOs at OTU (One Direction)" (14-53)).

Required Equipment

- Wrist Strap
- Optical Power Meter

Procedure

CAUTION

Use a static ground wrist strap whenever handling units or circuit packs to prevent electrostatic discharge damage to sensitive components. See Electrostatic Discharge (ESD) Considerations (13-3) in "TAP-100: Technical Assistance" (13-3).

Important! This procedure uses OTU in general terms, meaning that is also refers to an OTUD.

1 If necessary, remove the appropriate shelf cover. All connections can be accessed from the front. For details, go to "DLP-511: Install/Remove Shelf Cover" (14-19).

2 Are you adding or trouble clearing an OTU?

IF...	THEN...
adding	Continue with Step 3.
trouble clearing	Continue with Step 10.

3 Remove the protector cap and clean the fiber that will be connected to the OTU IN () port. For details, go to "DLP-510: Inspect and Clean Optical Fiber Connectors" (14-11).

4 Connect the optical power meter to the incoming fiber from the ODU OUT () port or from the downstream network element cleaned in Step 3 and obtain an optical power measurement.

5 Using the power level reading obtained in Step 4 and Table 14-3, "OTU Input Power Range" (14-52), compute the required LBO for the IN connector of the OTU() IN () port.

Important! If measured power level is greater than the Recommended Input Power level for a given type OTU() install an LBO with a value that will bring power level to near the Recommended Input Power level. For example, with a OC48/STM16 Optical Channel if the measured power level is -7 dBm then install a 10 dBm LBO.

6 Clean the OTU() IN(), port, LBO and both ends of the optical fiber that will be used to connect the ports. For details, refer to "DLP-510: Inspect and Clean Optical Fiber Connectors" (14-11).

7 Install the LBO into the IN() connector of the OTU(). For details, go to "DLP-512: Install/Remove Lightguide Buildout" (14-23).

8 Connect the optical fiber jumper between the OTU() IN () and ODU OUT () ports or OTU IN () port and OUT port of an upstream network element.

9 ***STOP! YOU HAVE COMPLETED THIS PROCEDURE.***

CAUTION

Make sure the protection facilities are available or that the troubled optical channel on this OTU has been manually switched to protection.

CAUTION

Make sure incoming fibers are not carrying service.

10 Remove the fiber jumper connected to the IN connector of the OTU() involved in this trouble.

11 Connect the optical power meter to the fiber jumper removed from the IN() connector of the OTU() in Step 10 and obtain an optical power measurement.

12 Using the power level reading obtained in Step 11 and the appropriate row of Table 14-3, "OTU Input Power Range" (14-52), determine if the power level is within range.

IF...	THEN...
YES	Continue with Step 13.
NO	Continue with Step 17.

13 Using the power level reading obtained in Step 11 and Table 14-3, "OTU Input Power Range" (14-52), compute the required LBO for the IN() port of the OTU.

Important! If measured power level is greater than the Recommended Input Power level for a given type OTU() install an LBO with a value that will bring power level to near the Recommended Input Power level. For example, with an OC-48/STM-16 Optical Channel if the measured power level is -7 dBm then install a 10 dBm LBO.

If measured power level is less than the recommended input power, but within the input power range, equip with a 0 dBm LBO.

14 Using the calculated LBO value obtained in Step 13, determine if the LBO installed in the OTU() IN () port is the correct value.

IF...	THEN...
YES	Continue with Step 17.
NO	Continue with Step 15.

15 Clean the OTU() IN () port, LBO and optical fiber jumper connector that was disconnected in Step 10. For details, refer to "DLP-510: Inspect and Clean Optical Fiber Connectors" (14-11).

16 Install the new LBO in the OTU() IN () port. For details, refer to "DLP-512: Install/Remove Lightguide Buildout" (14-23).

17 Reconnect the optical fiber jumper removed in Step 10 to the OTU() IN () port.

END OF STEPS

Refer to Table 14-3, "OTU Input Power Range" (14-52) for OTU Input Power Levels.

Table 14-3 OTU Input Power Range

OTU TYPE	CP CODE	Input Power Range	Recommended Input Power
OC-48/STM-16 /ADD	OTU1	-18 to -3 dBm	-10.5 dBm
OC-48/STM-16 THROUGH	OTU2	-24 to -10 dBm	-17 dBm
OC-48/STM-16 DROP	OTUD1	-24 to -10 dBm	-17 dBm
OC-192/STM-64 ADD	OTU30	-13 to -3 dBm	-8 dBm
OC-192/STM-64 THROUGH	OTU31	-20 to -13 dBm	-16.5 dBm
OC-192/STM-64 DROP	OTUD30	-20 to -13 dBm	-16.5 dBm

Table 14-3 OTU Input Power Range (continued)

OTU TYPE	CP CODE	Input Power Range	Recommended Input Power
HSBB ADD	OTU40	-18 to -3 dBm	-10.5 dBm
HSBB DROP	OTUD40	-24 to -10 dBm	-17 dBm
ORS		-11dBm to 0.5 dBm when ORS works with OC48 and HSBB OTUs	-6 dBm to 0.5dBm when ORS works with OC192 FEC OTUs
4:1 10G Multiplex OTU	OTU70	-15 to -4 dBm	-15 to -4 dBm

Supporting Figure

Figure 14-5 Location of LBOs at OTU (One Direction)

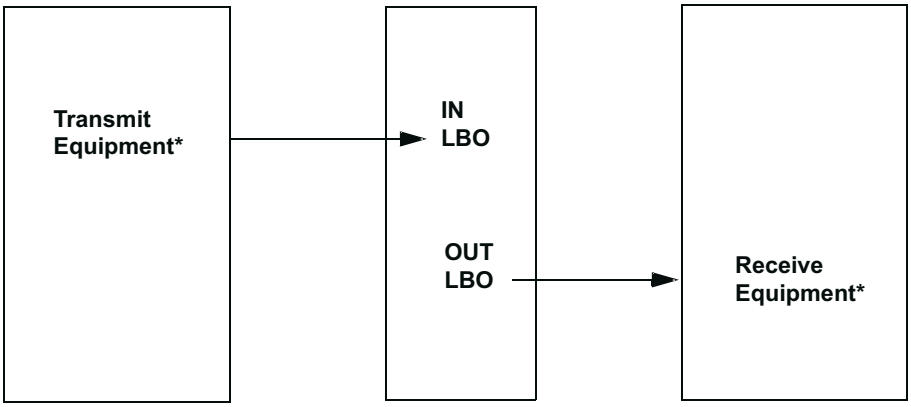

*WaveStar OLS 1.6T, or other vendors add/drop multiplexers

DLP-526: Inspect/Replace Dust Filter

Overview Use the procedure below to inspect/replace a dirty dust filter.

Procedure **Important!** A dirty filter causes a substantial reduction in the amount of available cooling air to the bays.

1 Identify the location of the appropriate dust filter cover.

2 At the top corners of each cover, locate the 1/4 turn screw, which is part of the latch assembly.

3 Using an appropriate screwdriver, rotate the 1/4 turn screw counterclockwise 90 degrees to unlock each latch handle.

4 Pivot each latch handle so it is perpendicular to the front face of the cover.

5 Pull on the latch handles to open the cover.

6 Rotate the two plastic finger grips located on the filter from the horizontal to the vertical position.

7 Remove the dust filter by pulling on the finger grips to slide it out of the shelf.

8 Inspect the dust filter for excessive dirt or blockage.

9 Did the inspection indicate a dirty or blocked dust filter?

IF...	THEN...
YES	Continue with Step 10.

IF...	THEN...
NO	Continue with Step 11

10 Discard the old filter.

Important! Replace ***ALL*** dust filters in the bay that have a **Clogged Dust Filter 1 or 2** (or both) condition.

11 Install a new or reinsert the old filter with the air flow arrows (located on the filter's edge) pointing up by first rotating the two plastic finger grips to the vertical position and sliding it into the same location on the shelf.

12 Close the cover, rotate the latch handles clockwise approximately 90 degrees and then pivot the handles so they are flush with the front face of the cover.

13 Using an appropriate screwdriver, rotate the 1/4 turn screw clockwise 90 degrees to lock the latch handle.

END OF STEPS

□

DLP-527: Replace Fan Assembly

Overview Use the procedure below to replace a defective fan assembly.

Procedure **Important!** Individual defective fans are not to be replaced. The entire fan assembly is to be replaced and returned for repair.

1 Identify the location of the defective fan assembly by the lighted Fault LED located at the front of the fan assembly.

2 Using a flat bladed screwdriver loosen the two 1/4 turn fasteners that secure the fan assembly in place by turning them in a counter clockwise direction.

3 Change the position of the wire spring pulls from flush against the face of the fan assembly to a horizontal position.

Important! The wire spring pulls are attached to the 1/4 turn fasteners

4 Pull on the wire spring pulls to remove the fan assembly from the fan shelf.

5 Slide the replacement fan assembly into this shelf until the front is flush with the bayshelf framework.

6 Using a flat bladed screwdriver tighten the two 1/4 turn fasteners that secure the fan assembly in place by turning them in a clockwise direction.

7 Change the position of the wire spring pulls so they are flush against the face of the fan assembly.

END OF STEPS

□

DLP-528: LBO Application

Overview

This procedure is used to determine the correct value of Line Build Out (LBO) required for the certain ports when installing an optical amplifier (OA) or optical translator unit (OTU).

Required Test Equipment:

- Wrist Strap
- Optical Power Meter
- Multiwavelength Meter or low polarization Optical Spectrum Analyzer (OSA)

Important! Multiwavelength Meter or low polarization Optical Spectrum Analyzer required for use only on systems that require pre-equalization.

Procedure

1 Are you installing or equipping an OA, OTU or OMU?

IF...	THEN...
OA	Continue with Step 2.
OTU	Continue with Step 12.
OMU	Continue with Step 37

Important! In this procedure, the circuit pack that first indicated ″failed″ or that you were instructed to change is called the ***original***.

2 On the ***original*** OA remove any LBO from the OUT port.

3 Clean the LBO removed from Step 2 and the OUT port of the ***replacement*** OA. For details, go to "DLP-510: Inspect and Clean Optical Fiber Connectors" (14-11).

4 Install the LBO into the OUT port of the ***replacement*** OA. For details see "DLP-512: Install/Remove Lightguide Buildout" (14-23).

5 On the ***original*** OA remove any LBO from the ***DCM OUT*** port.

6 Clean the LBO removed from the DCM OUT port of the ***replacement*** OA. For details, go to "DLP-510: Inspect and Clean Optical Fiber Connectors" (14-11).

7 Install the LBO removed from the DCM OUT port of the ***original*** OA in the DCM OUT port of the ***replacement*** OA. For details, go to "DLP-512: Install/Remove Lightguide Buildout" (14-23).

8 On the ***original*** OA remove any LBO from the IN port.

9 Clean the LBO removed from Step 8 and the IN port of the ***replacement*** OA. For details, go to "DLP-510: Inspect and Clean Optical Fiber Connectors" (14-11).

10 Install the LBO into the IN port of the ***replacement*** OA. For details see "DLP-512: Install/Remove Lightguide Buildout" (14-23).

11 ***STOP! YOU HAVE COMPLETED THIS PROCEDURE.***

12 From the local engineering records determine if Pre-equalization is required.

IF...	THEN...
Pre-equalization is required	Continue with Step 1 of the section, "Pre-Equalization Required" (14-65).
Pre-equalization is not required or required on four specific optical channels only	Continue with Step 13.

13 What type of OTU is being added or replaced in the system?

IF...	THEN...
OC-48/STM16, OC-192/STM64, 10Gb/s or HSBB	Continue with Step 14.
LSBB,	Continue with Step 16.

14 Connect the power meter to the OTU OUT() port of the OTU being installed.

15 Is the OTU optical power output -4.3 to -6.0 dBm?

IF...	THEN...
YES	Continue with Step 18.
NO	Replace OTU and return to Step 14.

16 Connect the power meter to the OTU OUT port of the OTU being installed.

17 Is the OTU optical power output -4.0 to -6.0 dBm?

IF...	THEN...
YES	Continue with Step 18.
NO	Replace OTU and return to Step 16.

18 Did you replace an OTU with a channel frequency of 9190, 9210 or 9360, 9380?

IF...	THEN...
YES	Continue with Step 19.
NO	Continue with Step 22.

19 On the original OTU remove any LBO from the OUT () ports. For details, go to "DLP-512: Install/Remove Lightguide Buildout" (14-23).

20 Clean the LBO's removed in Step 19. For details go to "DLP-510: Inspect and Clean Optical Fiber Connectors" (14-11)

21 Install the LBO's cleaned in Step 20 into the out port(s) of the replacement OTU.

22 Clean the OTU () Out and OMU () IN port and both ends of the fiber jumper that will be used to make the connection. For details, go to "DLP-510: Inspect and Clean Optical Fiber Connectors" (14-11).

23 Connect the fiber jumper between OTU () OUT port(s) and OMU () IN port(s).

24 ***STOP! YOU HAVE COMPLETED THIS PROCEDURE.***

25 Connect the power meter to the OTU OUT() port of the OTU being installed.

26 Is the OTU optical power output -4.3 dBm to -6.0 dBm?

IF...	THEN...
YES	Continue with Step 27.
NO	Replace OTU and return to Step 25.

27 Connect a Multiwavemeter or OSA to the OUT2 port of OMU1.

28 Clean the OTU () OUT and OMU () IN port and both ends of the fiber jumper that will be used to make the connection. For details, go to "DLP-510: Inspect and Clean Optical Fiber Connectors" (14-11).

29 Connect a fiber jumper between the OTU () OUT port and OMU() IN port.

30 At the Multiwavelength Meter or OSA, measure the power level of the channel being added.

31 Compute the required LBO for the channel being added. The target level for the channel being added is -19.0 dBm+/-0.5 dB.

32 Select and clean LBO determined from computations in Step 31. For details see "DLP-510: Inspect and Clean Optical Fiber Connectors" (14-11).

33 If required, install the correct LBO (determined in Step 31) at the OUT() port of the OTU() of the channel being added. For details, see "DLP-512: Install/Remove Lightguide Buildout" (14-23).

34 At the Multiwavelength Meter or OSA, observe the channel power levels. Added channel power level should be -19.0 dBm+/- 0.5dB.

IF...	THEN...
YES	Continue with Step 35.
NO	Return to Step 30.

35 Disconnect the Multiwavelength Meter or OSA from the OMU() OUT2 port.

36 ***STOP! YOU HAVE COMPLETED THIS PROCEDURE.***

37 From the local engineering records determine if Pre-equalization is required.

IF...	THEN...
Pre-equalization is not required	***STOP! YOU HAVE COMPLETED THIS PROCEDURE.***

IF...	THEN...
Pre-equalization is required on four specific optical channels only	Continue with Step 1 of the section, "Identify the Bay, Shelf and Slot of the OTUs with Channel Frequencies of 9190,9210 and 9360,9380" (14-62).
Pre-equalization is required	Continue with Step 1 of the section, "Pre-Equalization Required" (14-65).

END OF STEPS

Identify the Bay, Shelf and Slot of the OTUs with Channel Frequencies of 9190,9210 and 9360,9380

1 At the CIT, click **REPORT>Port Associations List**

2 Click on **WaveStar OLS 1.6T**. AID = System

3 Click on the **Select** button.

4 Scan the SOURCE PORT AID column and find 9190,9210 and 9360,9380 optical channel frequencies.

5 Record the Bay, Shelf and Slot for the two OTU″s identified in Step 4 of this section, "Identify the Bay, Shelf and Slot of the OTUs with Channel Frequencies of 9190,9210 and 9360,9380" (14-62).

6 Remove the appropriate shelf cover(s).

END OF STEPS

Calculate New LBO values for OTU OUT() ports

1 Remove the LBO that is installed in the OTU OUT() port for channel frequencies 9190, 9210, 9360, 9380.

2 Using an optical power meter, measure and record the output power corresponding to channel frequencies 9190, 9210 and 9360, 9380.

3 Record the OMU loss for each of the frequencies 9190, 9210 and 9360, 9380. OMU loss for these frequencies is recorded on the faceplate of the new OMU installed.

4 Using Table 14-4, "Target Level for OMU OUTPUT 2" (14-64) determine the required Target Power for the two OTU's identified in Step 4 of the section "Identify the Bay, Shelf and Slot of the OTUs with Channel Frequencies of 9190,9210 and 9360,9380" (14-62).

5 Using data collected in Step 2, Step 3, and Step 4 of this section "Calculate New LBO values for OTU OUT() ports" (14-63), calculate the required new LBO values for each optical channel using the formula: New LBO = OTU output power - (New OMU loss) - Target Power

New LBO [9120] = [Record new value]

New LBO [9210] = [Record new value]

New LBO [9360] = [Record new value]

New LBO [9380] = [Record new value]

END OF STEPS

Table 14-4 Target Level for OMU OUTPUT 2

Number of Channels	Type of System Inputs	OTU under Test	Target Level
80	Only OC-48	OC-48	-19.0 dBm +/-0.5
80	Only OC-192	OC-192	-19.0 dBm +/-0.5
80	Mixed OC-48 & OC192	OC-48	-19.0 dBm +/-0.5
		OC-192	-19.0 dBm +/-0.5

Install New LBO Values

1 Select and clean LBO determined from computations in Step 5 of "Calculate New LBO values for OTU OUT() ports" (14-63). For details see "DLP-510: Inspect and Clean Optical Fiber Connectors" (14-11).

2 Clean the OTU OUT () port for channel frequencies 9190, 9210 and 9360, 9380.

3 Install the correct LBO (determined in Step 5) of "Calculate New LBO values for OTU OUT() ports" (14-63) at the OUT() port of the OTUs for channel frequencies 9190, 9210 and 9360, 9380. For details, see "DLP-512: Install/Remove Lightguide Buildout" (14-23).

4 ***STOP! YOU HAVE COMPLETED THIS PROCEDURE.***

END OF STEPS

Pre-Equalization Required

1 Select an add OTU and connect the power meter to OTU OUT() port.

2 Is the OTU optical power output - 4.3 to -6.0 dBm?

IF...	THEN...
YES	Continue with Step 3.
NO	Replace OTU and return to Step 2.

3 Reconnect the fiber jumper between the OTU () OUT port and OMU() IN port.

4 Connect a Multiwavemeter or OSA to the OUT2 port of OMU1.

5 At the Multiwavelength Meter or OSA observe the power level of the selected channel. Using Table 14-4, "Target Level for OMU OUTPUT 2" (14-64) determine the correct power level for the selected channel.

6 If the power level does ***not*** fall within the target level, compute the required LBO that will bring the power level into the target range.

7 Select and clean LBO determined from computations in Step 6. For details see "DLP-510: Inspect and Clean Optical Fiber Connectors" (14-11).

8 If required, install the correct LBO (determined in Step 6) at the OUT() port of the OTU() of the selected channel. For details, see "DLP-512: Install/Remove Lightguide Buildout" (14-23).

9 At the Multiwavelength Meter or OSA, observe the selected channel power level. Power level should be within +/- 0.5 dB of target level list in Table 14-4, "Target Level for OMU OUTPUT 2" (14-64).

IF...	THEN...
YES	Continue with Step 10.
NO	Return to Step 6.

10 At the Multiwavelength Meter or OSA compare the power level of all the remaining optical channels on the system to the optical channel selected in Step 1.

11 If required, compute the required LBO for any optical channel not within +/- 0.5 dB of the optical channel selected in Step 1.

12 Select and clean LBO determined from computations in Step 11. For details see "DLP-510: Inspect and Clean Optical Fiber Connectors" (14-11).

13 If required, install the LBO (determined in Step 11) at the OUT port of the OTU() of any add optical channel that is not within +/- 0.5 dB of the optical channel selected in Step 1. For details, see "DLP-512: Install/Remove Lightguide Buildout" (14-23).

14 At the Multiwavelength Meter or OSA, observe the optical channel output levels. Are all channels should be within +/- 0.5 dB of the channel selected in Step 1

IF...	THEN...
YES	Continue with Step 15.
NO	Return to Step 11.

15 Disconnect the Multiwavelength Meter or OSA from the OMU1 (OUT2) port.

16 ***STOP! YOU HAVE COMPLETED THIS PROCEDURE.***

17 Is the system equipped with OC48/STM16 add OTU's

IF...	THEN...
YES	Continue with Step 18
NO	Continue with Step 32.

18 Select and add OC48/STM16 OTU and connect the power meter to OTU OUT() port.

19 Is the OTU optical power output -4.3 dBm to -6.0?

IF...	THEN...
YES	Continue with Step 20.
NO	Replace OTU and repeat Step 19.

20 Reconnect the fiber jumper between the OTU () OUT port and OMU() IN port.

21 Connect a Multiwavemeter or OSA to the OUT2 port of OMU1.

22 At the Multiwavelength Meter or OSA observe the power level of the selected channel. The target level for the selected OC48/STM16 optical channel is -19.0 dBm +/-0.5 dB.

23 If the power level does ***not*** fall within the target level, compute the required LBO that will bring the power level into the target range.

24 If required select and clean LBO determined from computations in Step 23. For details see "DLP-510: Inspect and Clean Optical Fiber Connectors" (14-11).

25 If required, install the correct LBO (determined in Step 23) at the OUT() port of the OTU() of the selected channel. For details, see "DLP-512: Install/Remove Lightguide Buildout" (14-23).

26 At the Multiwavelength Meter or OSA, observe the selected channel power level. The power level should be within -19.0 dBm +/-0.5 dB target level.

IF...	THEN...
YES	Continue with Step 27.
NO	Return to Step 23.

27 At the Multiwavelength Meter or OSA compare the power level of all the remaining add OC48/STM16 optical channels on the system to the optical channel selected in Step 18.

28 If required, compute the required LBO for any optical channel not within +/- 0.5 dB of the optical channel selected in Step 18.

29 Select and clean LBO determined from computations in Step 28. For details see "DLP-510: Inspect and Clean Optical Fiber Connectors" (14-11).

30 If required, install the LBO (determined in Step 28) at the OUT port of the OTU() of any add optical channel that is not within +/- 0.5 dB of the optical channel selected in Step 18. For details, see "DLP-512: Install/Remove Lightguide Buildout" (14-23).

31 At the Multiwavelength Meter or OSA, observe the optical channel output levels. Are all OC48/STM16 channels should be within +/- 0.5 dB of the channel selected in Step 18.

IF...	THEN...
YES	Continue with Step 32.

IF...	THEN...
NO	Return to Step 28

32 Is the system equipped with add OC-192/STM 64 OTU's?

IF...	THEN...
NO	STOP YOU HAVE COMPLETED THIS PROCEDURE
YES	Continue with Step 33.

33 Select and add OC-192/STM 64 OTU and connect the power meter to OTU OUT() port.

34 Is the OTU optical power output -4.3 dBm to -6.0 dBm?

IF...	THEN...
YES	Continue with Step 35.
NO	Replace the OTU and repeat Step 34

35 Reconnect the fiber jumper between the OTU () OUT port and OMU() IN port.

36 Connect a Multiwavemeter or OSA to the OUT2 port of OMU1.

37 At the Multiwavelength Meter or OSA observe the power level of the selected channel. The target level for the selected OC192/STM 64 optical channel is -19.0 dBm +/-0.5 dB.

38 If the power level does ***not*** fall within the target level, compute the required LBO that will bring the power level into the target range.

39 If required select and clean LBO determined from computations in Step 38. For details see "DLP-510: Inspect and Clean Optical Fiber Connectors" (14-11).

40 If required, install the correct LBO (determined in Step 38) at the OUT() port of the OTU() of the selected channel. For details, see "DLP-512: Install/Remove Lightguide Buildout" (14-23).

41 At the Multiwavelength Meter or OSA, observe the selected channel power level. Power level should be within -19.0 dBm +/-0.5 dB target level.

IF...	THEN...
YES	Continue with Step 42.
NO	Return to Step 38.

42 At the Multiwavelength Meter or OSA compare the power level of all the remaining add OC192/STM 64 optical channels on the system to the optical channel selected in Step 33.

43 If required, compute the required LBO for any optical channel not within +/- 0.5 dB of the optical channel selected in Step 33.

44 Select and clean LBO determined from computations in Step 43. For details see "DLP-510: Inspect and Clean Optical Fiber Connectors" (14-11).

45 If required, install the LBO (determined in Step 43) at the OUT port of the OTU() of any add optical channel that is not within +/- 0.5 dB of the optical channel selected in Step 33. For details, see "DLP-512: Install/Remove Lightguide Buildout" (14-23)

46 At the Multiwavelength Meter or OSA, observe the optical channel output levels. Are all OC-192/STM 64 channels should be within +/- 0.5 dB of the channel selected in Step 33.

IF...	THEN...
YES	***STOP! YOU HAVE COMPLETED THIS PROCEDURE.***
NO	Return to Step 43.

END OF STEPS

DLP-529: Baseline Optical Parameters

Overview

This procedure establishes baseline optical parameters for replaced circuit packs, repaired fiber, and added or deleted optical channels to the system.

Procedure

Important! All commands can be entered from any network element by logging into the desired remote network element. For details, go to "DLP-518: Initiate or Terminate Login Session to a Network Element Using WaveStar® OLS 1.6T CIT" (14-41).

1 Which Baseline Optical Parameter function is to be performed?

IF...	THEN...
SUPVY circuit pack replacement	Go to "Baseline SUPVY " (14-73).
OA circuit pack replacement	Go to "Baseline OA" (14-74).
OMON circuit pack replacement	Go to "Baseline OMON" (14-76).
Outside Plant Fiber repair	Go to "Baseline Outside Plant Fiber " (14-77).
If adding an Optical Channel to the system	Go to "Baseline Added Optical Channel" (14-78).
If deleting an Optical Channel from the system	Go to "Baseline Deleted Optical Channel " (14-81).

END OF STEPS

Baseline SUPVY

1 When a SUPVY circuit pack is replaced, use the CIT at that network element to select **PERFORMANCE-Manual Baseline**.

2 In the dialog box that appears, use the mouse to select the appropriate Bay, Shelf, SUPVY circuit pack and line-1(e/w) Then, click **SELECT**.

3 In the Set Baseline Supervisory dialog box, select the reason for baseline. Select the same reason for both supervisory channel directions (SPR-SU and SPT-SU).

4 Click on the radio button under Apply To for This Supervisory Channel Only.

5 Click on the **OK** button.

6 For a Ring Node or repeater(s), repeat Step 1 through Step 5 for the other line-1e or 1w.

7 Initiate a login session at the next upstream network element. For details, see "DLP-518: Initiate or Terminate Login Session to a Network Element Using WaveStar® OLS 1.6T CIT" (14-41).

8 At the CIT, select **PERFORMANCE-Manual Baseline**.

9 In the dialog box that appears, use the mouse to select the appropriate bay, shelf, SUPVY circuit pack and line-1(e/w). Select the line-1(e/w) that is receiving from the node where the SUPVY circuit pack was replaced. Then click **SELECT**.

10 In the Set Baseline Supervisory dialog box, select the reason for baselining. Select the reason for only receive supervisory channel direction (SPR-SU).

11 Click on the radio button under Apply to This Supervisory Channel Only.

12 Click on the **OK** button.

13 STOP! YOU HAVE COMPLETED THIS PROCEDURE.
END OF STEPS

Baseline OA

1 When an OA circuit pack is replaced, use the CIT at that network element to select **PERFORMANCE-Manual Baseline**.

2 In the dialog box that appears, using the mouse, select the appropriate Bay, Shelf, OA circuit pack and line-1(e/w). Select the circuit pack that was replaced. Then click **SELECT**.

3 In the Set Baseline Optical Line dialog box, select the reason to baseline.

4 Click on the radio button under Apply to this Optical Line Only.

5 Click on the **OK** button.

6 At the CIT, select **PERFORMANCE-Manual Baseline**.

7 In the dialog box that appears, use the mouse to select the appropriate Bay, Shelf, OTU() circuit pack and channel parameters, for example, Optical Channel-ochan-1e-9360. Select an OTU that is associated with the OA circuit pack that was replaced. Then click **SELECT**.

8 In the Set Baseline Optical Channel dialog box, select the reason to baseline.

9 Click on the radio button under Apply To all Optical Channels.

10 Click on the **OK** button.

11 At the CIT, select **PERFORMANCE-Manual Baseline**.

12 In the dialog box that appears, use the mouse to select the appropriate Bay, Shelf, SUPVY circuit pack and line-1(e/w). Select the SUPVY circuit pack associated with the OA circuit pack that was replaced. Then click **SELECT**.

13 In the Set Baseline Supervisory dialog box, select the reason to baseline. Select the same reason for both supervisory channel directions (SPR-SU or SPT-SU).

14 Click on the radio button under Apply To for This Supervisory Channel Only.

15 Click on the **OK** button.

16 Repeat Step 1 through Step 15 for the other Line-1e or 1w.

17 STOP! YOU HAVE COMPLETED THIS PROCEDURE.

END OF STEPS

Baseline OMON

Important! When an OMON circuit pack is replaced, part of this procedure must be repeated for all optical channels present at the node since the OMON is shared across all optical channels.

1 When an OMON circuit pack is replaced, use the CIT at that network element to select **PERFORMANCE-Manual Baseline**.

Important! An OTU is selected and not the OMON circuit pack.

2 In the dialog box that appears, use the mouse to select the appropriate Bay, Shelf, OTU() circuit pack and channel parameters, for example, Optical Channel-ochan-1e-9200. Select an OTU that is associated with an OA circuit pack that is connected to the OMON circuit pack that was replaced. Then click **SELECT**.

3 In the Set Baseline Optical Channel dialog box, select the reason to baseline. Select the reason for Signal Power, Received (SPR-C) and Transmitted (SPT-C).

4 Click on the radio button under Apply To for All Optical Channels.

5 Click on the **OK** button.

6 Repeat Step 2 through Step 5 for any additional optical line(s) connected to the OMON circuit pack at this network element.

7 STOP! YOU HAVE COMPLETED THIS PROCEDURE.

END OF STEPS

Baseline Outside Plant Fiber

1 At the CIT, initiate a login session to the site immediately downstream from the optical fiber repair.

2 At the CIT, select **PERFORMANCE-Manual Baseline**.

3 In the dialog box that appears, use the mouse to select the appropriate Bay, Shelf, OA circuit pack and line-1(e/w). Select the OA circuit pack associated with the optical fiber that was repaired. Then click **SELECT**.

4 In the Set Baseline Optical Line dialog box, select the reason to baseline. Select a reason for both total optical power, Received (TOPR-OL) and Transmitted (TOPT-OL).

5 Click on the radio button under Apply To for This Optical Line Only.

6 Click on the **OK** button.

7 STOP! YOU HAVE COMPLETED THIS PROCEDURE.

END OF STEPS

Baseline Added Optical Channel

1 How many optical channels are now equipped or in-service on the system?

IF...	THEN...
Eight (8) or more	Continue with Step 2.
Less than eight (8)	Continue with Step 3.

2 Eight (8) or More Channels

1. At the East terminal and at the CIT, select **PERFORMANCE-Manual Baseline**.
2. In the dialog box that appears, use the mouse and select the appropriate Bay, Shelf, OA circuit pack and line-1(e/w). Then click **SELECT**.
3. In the Set Baseline Optical Line dialog box, select the reason for baseline.
4. Click on the radio button under Apply To for This Optical Line Only.
5. Click on the **OK** button.
6. At the CIT, select**PERFORMANCE-Manual Baseline**.
7. In the dialog box that appears, use the mouse to select the appropriate Bay, Shelf, OTU circuit pack and channel parameters, for example, Optical Channel-ochan-1e-9380 (new ochan ####). Select the OTU that is associated with the Optical Channel being added. Then click **SELECT**.
8. In the Set Baseline Optical Channel dialog box, select the reason to baseline, for example, CHAN_ADDED.
9. Click on the radio button under Apply To for This Optical Channel Only.
10. Click on the **OK** button and click **OK** again to execute.
11. At the West terminal and at the CIT, select **PERFORMANCE-Manual Baseline**.
12. In the dialog box that appears, use the mouse and select the appropriate Bay, Shelf, OA circuit pack and line-1(w/e). Then click **SELECT**.

13. In the Set Baseline Optical Line dialog box, select the reason to baseline. Select a reason for both total optical power [Received (TOPR-OL) and Transmitted (TOPT-OL)].
14. Click on the radio button under Apply To for This Optical Line Only.
15. Click on the **OK** button.
16. At the CIT, select **PERFORMANCE-Manual Baseline**.
17. In the dialog box that appears, use the mouse and select the appropriate Bay, Shelf, OTU circuit pack and channel parameters, for example, Optical Channel-ochan-1e-9380 (new ochan ####). Select the OTU that is associated with the Optical Channel being added and click **SELECT**.
18. In the Set Baseline Optical Channel dialog box, select the reason to baseline. Select a reason for Signal Power, Received (SPR-C) and Transmitted (SPT-C).
19. Click on the radio button under Apply To for This Optical Channel Only.
20. Click on the **OK** button.
21. ***STOP! YOU HAVE COMPELETED THIS PROCEDURE.***

3 Less Than Eight (8) Channels

1. At the East terminal and at the CIT, select **PERFORMANCE-Manual Baseline**.
2. In the dialog box that appears, use the mouse and select the appropriate Bay, Shelf, OA circuit pack and line-1(e/w). Then click **SELECT**.
3. In the Set Baseline Optical Line dialog box, select a reason to baseline.
4. Click on the radio button under Apply To for This Optical Line Only.
5. Click on the **OK** button.
6. At the CIT, select **PERFORMANCE-Baseline**.

7. In the dialog box that appears, use the mouse and select the appropriate Bay, Shelf, OTU circuit pack and channel parameters, for example, Optical Channel-ochan-1e-9380 (new ochan ####). Select the OTU that is associated with the Optical Channel being added. Then click **SELECT**.
8. In the Set Baseline Optical Channel dialog box, select a reason to baseline.
9. Click on the radio button under Apply To for All Optical Channels.
10. Click on the **OK** button.
11. At the West terminal and at the CIT, select **PERFORMANCE-Manual Baseline**.
12. In the dialog box that appears, use the mouse to select the appropriate Bay, Shelf, OA circuit pack and line-1(w/e). Then click **SELECT**.
13. In the Set Baseline Optical Line dialog box, select a reason to baseline.
14. Click on the radio button under Apply To for This Optical Line Only.
15. Click on the **OK** button.
16. At the CIT, select **PERFORMANCE-Manual Baseline**.
17. In the dialog box that appears, use the mouse and select the appropriate Bay, Shelf, OTU circuit pack and channel parameters, for example, Optical Channel-ochan-1e-9380 (new ochan ####). Select the OTU that is associated with the Optical Channel being added. Then click **SELECT**.
18. In the Set Baseline Optical Channel dialog box, select a reason to baseline.
19. Click on the radio button under Apply To for All Optical Channels.
20. Click on the **OK** button.
21. STOP! YOU HAVE COMPLETED THIS PROCEDURE

END OF STEPS

Baseline Deleted Optical Channel

1 How many optical channels are now equipped or in-service on the system?

IF...	THEN...
Nine or more	Continue with Step 2.
Eight or less	Continue with Step 3.

2 Nine (9) or More Channels

1. At the East terminal and at the CIT, select **PERFORMANCE-Manual Baseline**.
2. In the dialog box that appears, use the mouse and select the appropriate Bay, Shelf, OA circuit pack and line-1(e/w). Then click **SELECT**.
3. In the Set Baseline Optical Line dialog box, select a reason to baseline.
4. Click on the radio button under Apply To for This Optical Line Only.
5. Click on the **OK** button.
6. At the West terminal and at the CIT, select **PERFORMANCE-Manual Baseline**.
7. In the dialog box that appears, use the mouse and select the appropriate Bay, Shelf, OA circuit pack and line-1(e/w). Then click **SELECT**.
8. In the Set Baseline Optical Line dialog box, select a reason to baseline.
9. Click on the radio button under Apply To for This Optical Line Only.
10. Click on the **OK** button.
11. ***STOP! YOU HAVE COMPELETED THIS PROCEDURE.***

3 Eight or less Channels

1. At the East terminal and at the CIT, select **PERFORMANCE-Manual Baseline**.
2. In the dialog box that appears, use the mouse and select the appropriate Bay, Shelf, OA circuit pack and line-1(e/w). Then click **SELECT**.
3. In the Set Baseline Optical Line dialog box, select a reason to baseline. Select a reason for both total optical power [Received (TOPR-OL) and Transmitted (TOPT-OL)].
4. Click on the radio button under Apply To for This Optical Line Only.
5. Click on the **OK** button.
6. At the CIT, select **PERFORMANCE-Manual Baseline**.
7. In the dialog box that appears, use the mouse and select the appropriate Bay, Shelf, OTU circuit pack and channel parameters, for example, Optical Channel-ochan-1e-9380 (new ochan ####). Select the OTU that is associated with the Optical Channel being deleted. Then click **SELECT**.
8. In the Set Baseline Optical Channel dialog box, select the reason to baseline. Select the reason for Signal Power, Received (TOPR-OCHAN) and Transmitted (TOPT-OCHAN).
9. Click on the radio button under Apply To for All Optical Channels.
10. Click on the **OK** button.
11. At the West terminal and at the CIT, select, **PERFORMANCE-Manual Baseline**.
12. In the dialog box that appears, use the mouse and select the appropriate Bay, Shelf, OA circuit pack and line-1(e/w). Then click **SELECT**.
13. In the Set Baseline Optical Line dialog box, select the reason to baseline. Select the reason for both total optical power [Received (TOPR-OL) and Transmitted (TOPT-OL)].
14. Click on the radio button under Apply To for This Optical Line Only.
15. Click on the **OK** button.
16. At the CIT, select **PERFORMANCE-Manual Baseline.**

17. In the dialog box that appears, use the mouse and select the appropriate Bay, Shelf, OTU circuit pack and channel parameters, for example, Optical Channel-ochan-1e-9380 (new ochan ####). Select the OTU that is associated with the Optical Channel being deleted and click **SELECT**.
18. In the Set Baseline Optical Channel dialog box, select the reason to baseline. Select reason for Signal Power, Received (TOPR-OCHAN) and Transmitted (TOPT-OCHAN).
19. Click on the radio button under Apply To for All Optical Channels.
20. Click on the **OK** button.
21. ***STOP! YOU HAVE COMPELETED THIS PROCEDURE.***

END OF STEPS

□

DLP-530: DCM LBO Procedure

Overview Use the following procedure to choose the LBO for the DCM port of an OA.

Procedure

CAUTION

SERVICE AFFECTING - The following steps will cause traffic interruption.

1 Is there a DCM associated with this OA?

IF...	THEN...
YES	Continue with Step 6.
NO	Continue with Step 2.

2 Remove the fiber jumpers from the DCM IN and DCM OUT ports of the OA.

3 Put a 9 dB LBO on the DCM OUT Port of the OA.

4 Clean and reconnect the appropriate fiber to the respective DCM IN and DCM OUT Port of the OA.

5 STOP! YOU HAVE COMPLETED THIS PROCEDURE.

6 Remove the fiber jumpers from the DCM IN and DCM OUT ports of the OA.

7 Remove the fiber from the Out Port of the Supervisory pack.

8 Using a clean fiber, measure and record the optical power (P) at the OUT port of the Supervisory pack.

9 Clean and attach the fiber from the In port of the DCM to the OUT port of the Supervisory pack.

10 Clean the fiber from the Out port of the DCM and measure and record (R) the power out of the DCM.

11 Determine the DCM Loss DCM_LOSS = P - R

12 Determine the size of the DCM LBO required and install the LBO in the DCM OUT port of the OA. DCM LBO = 9 dB - DCM_LOSS (use 0 dB LBO if DCM_LOSS > 9 dB)

13 Clean and reconnect the fiber disconnected in Step 7 to the Out Port of the Supervisory Pack.

14 Clean and reconnect the fibers disconnected in Step 6 to the respective DCM IN and DCM OUT port of the OA.

END OF STEPS

□

DLP-531: Packaging of Lucent Technologies Bays, Subrack Assemblies, and Individual Circuit Packs for Return

Overview

Use the following procedure for the handling and packaging of bays (cabinets), subrack assemblies, and individual circuit packs for transport both within the office and to off-site locations.

Procedure

CAUTION

Improper packing of equipment may cause irreparable damage to the unit. Follow these instructions carefully to insure safe shipping and handling. In all cases, care must be used when handling these products. Do not stack circuit packs directly on top of each other, otherwise damage to components may occur. Exposed fiber connections on the circuit pack should be plugged. Fiber optic cables should not be bent and exposed ends should be covered. Proper ESD procedures must be used at all times. Ensure that all plastic bags, wraps, and cushioning materials, used for packaging purposes, are ESD safe.

1 Are you transporting/handling a bay, subrack assembly, or circuit pack within the office?

IF...	THEN...
BAY	Continue with Step 2.
SUBRACK ASSEMBLY	Continue with Step 6.
CIRCUIT PACK	Continue with Step 10.

WARNING

Improper packing of a circuit pack violates the warranty conditions of the product.

2 Bays can be moved within an office fully equipped. Ensure that all circuit packs are fully seated and properly latched. For details, refer to "DLP-514: Remove and/or Install Circuit Pack" (14-27). Ensure all subrack assemblies are secured with all screws in place and tightened. Also secure any loose or dangling cable ends to prevent damage to the backplane pins.

3 Latch the front and rear door panels of the bay. For details, refer to "DLP-511: Install/Remove Shelf Cover" (14-19).

4 Move the bay to the desired location using installer wheels or a similar bay handling device. Proceed slowly over any irregularities in floor surfaces such as building expansion joints and elevator thresholds.

5 STOP! YOU HAVE COMPLETED THIS PROCEDURE.

6 Subrack assemblies can be transported within an office with or without circuit packs in place. If the subrack assembly is equipped with circuit packs, make sure that the latches are fully engaged. For details, refer to "DLP-514: Remove and/or Install Circuit Pack" (14-27).

7 Attach the front cover to the subrack assembly in order to protect the latches and other exposed components. For details, go to "DLP-511: Install/Remove Shelf Cover" (14-19). Cover back of subrack assembly with corrugated fiberboard with flaps folded around all four sides of the units to protect the backplane pins.

8 Place unit in a tote box or on a cart such that the pins cannot be damaged. Place cushioning material under the unit to dampen shock and vibration when transporting on cart.

9 STOP! YOU HAVE COMPLETED THIS PROCEDURE

10 Remove circuit pack and immediately insert into a suitable ESD safe plastic bag.

11 Leave the existing LBOs in place on the pack so that the pack can be tested with the same conditions as when it was installed in the system.

12 If the circuit pack has optical connectors, place protective caps over the connectors to prevent damage and preserve cleanliness.

Important! Circuit packs can be transported within an office in tote boxes constructed from ESD safe materials that are equipped with slots or dividers that do not allow packs to impact against each other.

13 Circuit packs in ESD -safe bags may be hand-carried or placed in suitable tote boxes. Do not stack circuit packs directly on top of each other, and always use ESD safe cushioning materials between them.

14 STOP! YOU HAVE COMPLETED THIS PROCEDURE.

15 Are you transporting/handling a bay, subrack assembly, or circuit pack to another location?

IF...	THEN...
BAY	Continue with Step 16.
SUBRACK ASSEMBLY	Continue with Step 21.
CIRCUIT PACK	Continue with Step 26.

CAUTION

When transporting Lucent Technologies equipment to off-site locations, always use adequate packaging to ensure the transportation and handling environment. All circuit packs must be removed and packed separately. Whenever possible, re-use the factory supplied packaging material, and re-package in the same manner. It is assumed that transportation will be in enclosed vehicles, that exposure to adverse weather conditions will be limited, and that all packaging must conform to local carrier regulations.

16 Mount bay on a cushioned skid fully enclosed in an ESD bag.

17 Remove all circuit packs. For details, refer to "DLP-514: Remove and/or Install Circuit Pack" (14-27).

18 Reattach the front covers to the bay. For details, refer to "DLP-511: Install/Remove Shelf Cover" (14-19).

19 Cover with a corrugated shroud or cleated plywood crate with adequate blocking. Follow all packaging instructions when assembling the containers.

20 STOP! YOU HAVE COMPLETED THIS PROCEDURE.

21 Before packaging a subrack assembly, remove the circuit packs. For details, refer to "DLP-514: Remove and/or Install Circuit Pack" (14-27).

22 Re-attach the front cover. For details, refer to "DLP-511: Install/Remove Shelf Cover" (14-19).

23 Cover back of subrack assembly with corrugated fiberboard with flaps folded around all four sides of the units to protect the backplane pins. Wrap unit(s) in suitable anti-static cushioning material such as bubble or flexible foam sheets to a two-inch minimum thickness.

24 Center the wrapped unit in a suitably sized carton constructed of double wall corrugated fiberboard. Fill any voids with additional cushioning as necessary to immobilize the unit within the container.

25 STOP! YOU HAVE COMPLETED THIS PROCEDURE.

WARNING

Improper packing of a circuit pack violates the warranty conditions of the product.

Important! Always package circuit packs individually when transporting to a different location.

26 Place the circuit pack in ESD safe bag.

Important! When shipping multiple circuit packs to a single destination it is recommended to combine the separate cartons into a larger shipping container for additional in-transit protection.

27 Wrap circuit pack at least one inch thick in suitable cushioning material, such as bubble or flexible foam sheets, protecting all six sides. Center the circuit pack into a suitably sized corrugated container, filling any voids with additional cushioning as necessary to immobilize the circuit pack within the container. Ensure that package does not rattle when shaken.

28 STOP! YOU HAVE COMPLETED THIS PROCEDURE.

29 Identify all containers with contents. Apply ″ESD,″ ″THIS SIDE UP,″ ″FRAGILE,″ and other precautionary labels or markings as required. Obtain the waybill identifier for the shipment from the carrier used to ship the equipment. This will prove useful in tracking the progress of the equipment as it moves from the source to the destination and will allow the recipient to identify the date and time of its arrival.

30 STOP! YOU HAVE COMPLETED THIS PROCEDURE.

END OF STEPS

□

Appendix A: Alarm Reference Guide

Overview

Purpose This appendix provides an index and description of the system conditions and alarms.

Alarm Condition Table

Alarm Condition Table

Table A-1 provides system conditions and alarms.

Table A-1 Alarm Condition Table (Events Related To Commands are Italicized)

WaveStar® OLS 1.6T Conditions/Events[1]	Condition[2]	SONET Original Attribute[3]			SDH Original Attribute[4]			Source Address ID[5]	ASAP Entity Type[6]
		Service Independent	Service Dependent		Service Independent	Service Dependent			
			Service Affecting	Nonservice Affecting		Service Affecting	Nonservice Affecting		
provisioned-controlpt	Yes	--	--	NA	--	--	No Alarm	Ext Ctl Pts	env
provisioned environ-mentalpt	Yes	MN	--	--	DEFERRED	--	--	Ext Env Pts	env
SUPVY drop output LOS	Yes	MJ	--	--	PROMPT	--	--	Port (OA IN)	supvy
SUPVY add input LOS	Yes	MJ	--	--	PROMPT	--	--	Port (OA SUP TX)	supvy
WAD drop channel LOS	Yes	--	--	MN	--	--	DEFERRED	Port (WAD DROP IN)	oline
WAD failure	Yes	--	--	MJ	--	--	PROMPT	Slot (WAD)	pack
WAD removed	Yes	--	--	MJ	--	--	PROMPT	Slot (WAD)	slot
APSD active-line	Yes	--	--	NA	--	--	No Alarm	Slot (OA)	pack
APSD active -ODU	Yes	--	--	NA	--	--	No Alarm	Slot (OA)	pack
Insufficient span loss (<10dB)	Yes	--	--	MJ	--	--	PROMPT	Line	oline
incoming optical line LOS	Yes	--	--	MJ	--	--	PROMPT	Line	oline

Table A-1 Alarm Condition Table (Events Related To Commands are Italicized) (continued)

WaveStar® OLS 1.6T Conditions/Events[1]	Condition[2]	SONET Original Attribute[3]			SDH Original Attribute[4]			Source Address ID[5]	ASAP Entity Type[6]
		Service Independent	Service Dependent		Service Independent	Service Dependent			
			Service Affecting	Nonservice Affecting		Service Affecting	Nonservice Affecting		
incoming optical channel LOS	Yes	--	--	MN	--	--	DEFERRED	Channel (Optical)	ochan
optical channel transmit failure	Yes	--	--	MN	--	--	DEFERRED	Channel (Optical)	ochan
Activate-User-cmptcode	--	--	--	--	--	--	--	Op Intf (UID)	--
Allow-Message-Eqpt-cmptcode	--	--	--	--	--	--	--	Op Intf (UID)	--
Cancel-User-cmptcode	--	--	--	--	--	--	--	Op Intf (UID)	--
Copy-Program-cmptcode	--	--	--	--	--	--	--	Op Intf (UID)	--
Delete-Association-OTPS-cmptcode	--	--	--	--	--	--	--	Op Intf (UID)	--
Delete-User-Security-cmptcode	--	--	--	--	--	--	--	Op Intf (UID)	--
Edit-Date-cmptcode	--	--	--	--	--	--	--	Op Intf (UID)	--

Table A-1 Alarm Condition Table (Events Related To Commands are Italicized) (continued)

WaveStar® OLS 1.6T Conditions/Events[1]	Condition[2]	SONET Original Attribute[3]			SDH Original Attribute[4]			Source Address ID[5]	ASAP Entity Type[6]
		Service Independent	Service Dependent		Service Independent	Service Dependent			
			Service Affecting	Nonservice Affecting		Service Affecting	Nonservice Affecting		
Enter-Association-OTPS-cmptcode	--	--	--	--	--	--	--	Op Intf (UID)	--
Enter-OLPP-cmptcode	--	--	--	--	--	--	--	Op Intf (UID)	--
Enter-OSI-cmptcode	--	--	--	--	--	--	--	Op Intf (UID)	--
Enter-OTPS: port(otps)-cmptcode	--	--	--	--	--	--	--	Op Intf (UID)	--
Enter-Section-Trace-cmptcode	--	--	--	--	--	--	--	Op Intf (UID)	--
Enter-SUPR:supr-cmptcode	--	--	--	--	--	--	--	Op Intf (UID)	--
Enter-System-cmptcode	--	--	--	--	--	--	--	Op Intf (UID)	--
Enter-SUPVY-Timing-Src-cmptcode	--	--	--	--	--	--	--	Op Intf (UID)	--
Enter-Transport-Service-Bridge-cmptcode	--	--	--	--	--	--	--	Op Intf (UID)	--

Table A-1 Alarm Condition Table (Events Related To Commands are Italicized) (continued)

WaveStar® OLS 1.6T Conditions/Events[1]	Condition[2]	SONET Original Attribute[3]			SDH Original Attribute[4]			Source Address ID[5]	ASAP Entity Type[6]
		Service Independent	Service Dependent		Service Independent	Service Dependent			
			Service Affecting	Nonservice Affecting		Service Affecting	Nonservice Affecting		
Inhibit-Message-Eqpt-cmptcode	--	--	--	--	--	--	--	Op Intf (UID)	--
Initialize-Register-All-cmptcode	--	--	--	--	--	--	--	Op Intf (UID)	--
Initialize-System-cmptcode	--	--	--	--	--	--	--	Op Intf (UID)	--
Initiate-Software-Download-cmptcode	--	--	--	--	--	--	--	Op Intf (UID)	--
Operate-Alarm-Cutoff-All-cmptcode	--	--	--	--	--	--	--	Op Intf (UID)	--
Operate-External-Control-cmptcode	--	--	--	--	--	--	--	Op Intf (UID)	--
Operate-Protection-Switch-OW-cmptcode	--	--	--	--	--	--	--	Op Intf (UID)	--
Operate-Trace-OTU-cmptcode	--	--	--	--	--	--	--	Op Intf (UID)	--

Lucent Technologies - Proprietary
See notice on first page

Table A-1 Alarm Condition Table (Events Related To Commands are Italicized) (continued)

WaveStar® OLS 1.6T Conditions/Events[1]	Condition[2]	SONET Original Attribute[3]			SDH Original Attribute[4]			Source Address ID[5]	ASAP Entity Type[6]
		Service Independent	Service Dependent		Service Independent	Service Dependent			
			Service Affecting	Nonservice Affecting		Service Affecting	Nonservice Affecting		
Operate-Trace-SUPVY-cmptcode	--	--	--	--	--	--	--	Op Intf (UID)	--
Release-External-Control-cmptcode	--	--	--	--	--	--	--	Op Intf (UID)	--
Release-Protection-Switch-OW-cmptcode	--	--	--	--	--	--	--	Op Intf (UID)	--
Release-Trace-OTU-cmptcode	--	--	--	--	--	--	--	Op Intf (UID)	--
Release-Trace-SUPVY-cmptcode	--	--	--	--	--	--	--	Op Intf (UID)	--
Set-Attr-Alarm-cmptcode	--	--	--	--	--	--	--	Op Intf (UID)	--
Set-Attr-Control: point(cont)-cmptcode	--	--	--	--	--	--	--	Op Intf (UID)	--
Set-Attr-Environ-ment: point(env)-cmptcode	--	--	--	--	--	--	--	Op Intf (UID)	--

Table A-1 Alarm Condition Table (Events Related To Commands are Italicized) (continued)

WaveStar® OLS 1.6T Conditions/Events[1]	Condition[2]	SONET Original Attribute[3]			SDH Original Attribute[4]			Source Address ID[5]	ASAP Entity Type[6]
		Service Independent	Service Dependent		Service Independent	Service Dependent			
			Service Affecting	Nonservice Affecting		Service Affecting	Nonservice Affecting		
Set-Baseline-Oline-cmptcode	--	--	--	--	--	--	--	Op Intf (UID)	--
Set-Baseline-Ochan-cmptcode	--	--	--	--	--	--	--	Op Intf (UID)	--
Set-Baseline-Supr-cmptcode	--	--	--	--	--	--	--	Op Intf (UID)	--
Test-Alm-cmptcode	--	--	--	--	--	--	--	Op Intf (UID)	--
Test-Auto-Local-cmptcode	--	--	--	--	--	--	--	Op Intf (UID)	--
Test-LED-cmptcode	--	--	--	--	--	--	--	Op Intf (UID)	--
Update-System-cmptcode	--	--	--	--	--	--	--	Op Intf (UID)	--
OMS (ODU1) LOS	Yes	--	--	MJ	--	--	PROMPT	Port (ODU IN)	oline
ODU failure	Yes	--	--	MJ	--	--	PROMPT	Slot (ODU)	pack
ODU removed	--	--	MJ	--	--	PROMPT	Slot (ODU)	Slot (ODU)	slot
OMU failure	Yes	--	--	MJ	--	--	PROMPT	Slot (OMU)	pack
OMU removed	Yes	--	--	MJ	--	--	PROMPT	Slot (OMU)	slot
EI failure	Yes	--	--	MJ	--	--	PROMPT	Slot (EI)	pack
INITSWD: IP	Yes	--	--	NA	--	--	No Alarm	System	--

Lucent Technologies - Proprietary
See notice on first page

Table A-1 Alarm Condition Table (Events Related To Commands are Italicized) (continued)

WaveStar® OLS 1.6T Conditions/Events[1]	Condition[2]	SONET Original Attribute[3]			SDH Original Attribute[4]			Source Address ID[5]	ASAP Entity Type[6]
		Service Independent	Service Dependent		Service Independent	Service Dependent			
			Service Affecting	Nonservice Affecting		Service Affecting	Nonservice Affecting		
INITSWD: check fail	--	--	--	--	--	--	--	System	--
INITSWD: comm. fail	--	--	--	--	--	--	--	System	--
INITSWD: completed	--	--	--	--	--	--	--	System	--
INITSWD: erase fail	--	--	--	--	--	--	--	System	--
INITSWD: write fail	--	--	--	--	--	--	--	System	--
EI removed	Yes	--	--	MJ	--	--	PROMPT	Slot (EI)	slot
OMON failure	Yes	--	--	MJ	--	--	PROMPT	Slot (OMON)	pack
OMON removed	Yes	--	--	MJ	--	--	PROMPT	Slot (OMON)	slot
Circuit breaker/power failure A	Yes	--	--	MJ	--	--	PROMPT	Shelf	shelf
Circuit breaker/power failure A and B	Yes	--	--	MJ	--	--	PROMPT	Shelf	shelf
Circuit breaker/power failure B	Yes	--	--	MJ	--	--	PROMPT	Shelf	shelf
unexpected CP type	Yes	MN	--	--	DEFERRED	--	--	Slot (un-known)	slot
no CP expected in slot	Yes	--	--	NA	--	--	No Alarm	Slot	slot

Table A-1 Alarm Condition Table (Events Related To Commands are Italicized) (continued)

WaveStar® OLS 1.6T Conditions/Events[1]	Condition[2]	SONET Original Attribute[3]			SDH Original Attribute[4]			Source Address ID[5]	ASAP Entity Type[6]
		Service Independent	Service Dependent		Service Independent	Service Dependent			
			Service Affecting	Nonservice Affecting		Service Affecting	Nonservice Affecting		
Set-PM-Start-Time-cmptcode	--	--	--	--	--	--	--	Op Intf (UID)	--
Set-TH-OCHAN-cmptcode	--	--	--	--	--	--	--	Op Intf (UID)	--
Set-TH-OLINE-cmptcode	--	--	--	--	--	--	--	Op Intf (UID)	--
Set-TH-OTPS-cmptcode	--	--	--	--	--	--	--	Op Intf (UID)	--
Set-TH-SUPR-cmptcode	--	--	--	--	--	--	--	Op Intf (UID)	--
Edit-Password-ID-cmptcode	--	--	--	--	--	--	--	Op Intf (UID)	--
Edit-User-SECU-cmptcode	--	--	--	--	--	--	--	Op Intf (UID)	--
Enter-Channel-ID-SECU-cmptcode	--	--	--	--	--	--	--	Op Intf (UID)	--
Enter-Network Element-SECU-cmptcode	--	--	--	--	--	--	--	Op Intf (UID)	--

Table A-1 Alarm Condition Table (Events Related To Commands are Italicized) (continued)

WaveStar® OLS 1.6T Conditions/Events[1]	Condition[2]	SONET Original Attribute[3]			SDH Original Attribute[4]			Source Address ID[5]	ASAP Entity Type[6]
		Service Independent	Service Dependent		Service Independent	Service Dependent			
			Service Affecting	Nonservice Affecting		Service Affecting	Nonservice Affecting		
Enter-User-SECU-cmptcode	--	--	--	--	--	--	--	Op Intf (UID)	--
OA failure	Yes	--	--	MJ	--	--	PROMPT	Slot (OA)	pack
OA removed	Yes	--	--	MJ	--	--	PROMPT	Slot (OA)	slot
ODU warmup in progress	Yes	--	--	NA	--	--	No Alarm	Slot (ODU)	pack
OMU warmup in progress	Yes	--	--	NA	--	--	No Alarm	Slot (OMU)	pack
BOS failure	Yes	--	--	MJ	--	--	PROMPT	Slot (BOS)	pack
BOS removed	Yes	--	--	MJ	--	--	PROMPT	Slot (BOS)	slot
OTU failure	Yes	--	--	MJ	--	--	PROMPT	Slot (OTU)	pack
OTU removed	Yes	--	--	MJ	--	--	PROMPT	Slot (OTU)	slot
FLASH failure	Yes	--	--	MJ	--	--	PROMPT	Slot (BOS)	pack
FLASH removed	Yes	--	--	MJ	--	--	PROMPT	Slot (BOS)	pack
Test LED in progress	Yes	NR	--	--	No Report	--	--	System	system
FLASH unrecogni-zable code	Yes	--	--	MJ	--	--	PROMPT	Slot (BOS)	pack

Table A-1 Alarm Condition Table (Events Related To Commands are Italicized) (continued)

WaveStar® OLS 1.6T Conditions/Events[1]	Condition[2]	SONET Original Attribute[3]			SDH Original Attribute[4]			Source Address ID[5]	ASAP Entity Type[6]
		Service Independent	Service Dependent		Service Independent	Service Dependent			
			Service Affecting	Nonservice Affecting		Service Affecting	Nonservice Affecting		
FLASH/SYSCTL code mismatch	Yes	--	--	MJ	--	--	PROMPT	Slot (BOS)	pack
SUPVY failure	Yes	--	--	MJ	--	--	PROMPT	Slot (SUPVY)	pack
SUPVY removed	Yes	--	--	MJ	--	--	PROMPT	Slot (SUPVY)	slot
Incoming SUPVY channel LOS	Yes	MJ	--	--	PROMPT	--	--	Port (SUPVY IN)	supvy
Incoming SUPVY channel LOF	Yes	MJ	--	--	PROMPT	--	--	Port (SUPVY IN)	supvy
CPYPGM: IP tid dest	Yes	--	--	NA	--	--	No Alarm	System	fixed
CPYPGM: IP tid src	Yes	--	--	NA	--	--	No Alarm	System	fixed
CPYPGM: check fail tid	--	--	--	--	--	--	--	System	--
CPYPGM: comm. fail tid	--	--	--	--	--	--	--	System	--
CPYPGM: completed tid dest	--	--	--	--	--	--	--	System	--
CPYPGM: completed tid src	--	--	--	--	--	--	--	System	--

Lucent Technologies - Proprietary
See notice on first page

Table A-1 Alarm Condition Table (Events Related To Commands are Italicized) (continued)

WaveStar® OLS 1.6T Conditions/Events[1]	Condition[2]	SONET Original Attribute[3]			SDH Original Attribute[4]			Source Address ID[5]	ASAP Entity Type[6]
		Service Independent	Service Dependent		Service Independent	Service Dependent			
			Service Affecting	Nonservice Affecting		Service Affecting	Nonservice Affecting		
CPYPGM: erase fail tid	--	--	--	--	--	--	--	System	--
CPYPGM: flash busy tid	--	--	--	--	--	--	--	System	--
CPYPGM: write fail tid	--	--	--	--	--	--	--	System	--
TCA Optics: OLINE (TOPR-OL)	Yes	--	--	NA	--	--	No Alarm	Line	fixed
TCA Optics: OLINE (TOPT-OL)	Yes	--	--	NA	--	--	No Alarm	Line	fixed
TCA Optics: SUPVY (SPR-SU)	Yes	--	--	NA	--	--	No Alarm	Port (SUPVY IN)	fixed
TCA Optics: SUPVY (SPT-SU)	Yes	--	--	NA	--	--	No Alarm	Port (SUPVY IN)	fixed
TCA Optics: OCHAN (SPR-C)	Yes	--	--	NA	--	--	No Alarm	Channel (Optical)	fixed
TCA Optics: OCHAN (SPT-C)	Yes	--	--	NA	--	--	No Alarm	Channel (Optical)	fixed
TCA Optics: OTU OC-48/STM-16 (OPR)	Yes	--	--	NA	--	--	No Alarm	Port (OTU IN)	fixed

Table A-1 Alarm Condition Table (Events Related To Commands are Italicized) (continued)

WaveStar® OLS 1.6T Conditions/Events[1]	Condition[2]	SONET Original Attribute[3]			SDH Original Attribute[4]			Source Address ID[5]	ASAP Entity Type[6]
		Service Independent	Service Dependent		Service Independent	Service Dependent			
			Service Affecting	Nonservice Affecting		Service Affecting	Nonservice Affecting		
TCA Optics: OTU OC-48/STM-16 (OPT)	Yes	--	--	NA	--	--	No Alarm	Port (OTU IN)	fixed
TCA Optics: OTU OC-48/STM-16 (LBC)	Yes	--	--	NA	--	--	No Alarm	Port (OTU IN)	fixed
TCA Optics: OTU OC-192/STM-64 (OPR)	Yes	--	--	NA	--	--	No Alarm	Port (OTU IN)	fixed
TCA Optics: OTU OC-192/STM-64 (OPT)	Yes	--	--	NA	--	--	No Alarm	Port (OTU IN)	fixed
TCA Optics: OTU OC-192/STM-64 (LBC)	Yes	--	--	NA	--	--	No Alarm	Port (OTU IN)	fixed
TCA Digital: SUPVY (CRC)-tmper	--	--	--	--	--	--	--	Port (SUPVY IN)	--
TCA Digital: SUPVY (ES)-tmper	--	--	--	--	--	--	--	Port (SUPVY IN)	--

Table A-1 Alarm Condition Table (Events Related To Commands are Italicized) (continued)

WaveStar® OLS 1.6T Conditions/Events[1]	Condition[2]	SONET Original Attribute[3]			SDH Original Attribute[4]			Source Address ID[5]	ASAP Entity Type[6]
		Service Independent	Service Dependent		Service Independent	Service Dependent			
			Service Affecting	Nonservice Affecting		Service Affecting	Nonservice Affecting		
TCA Digital: SUPVY (BES)-tmper	--	--	--	--	--	--	--	Port (SUPVY IN)	--
TCA Digital: SUPVY (SES)-tmper	--	--	--	--	--	--	--	Port (SUPVY IN)	--
TCA Digital: SUPVY (UAS)-tmper	--	--	--	--	--	--	--	Port (SUPVY IN)	--
TCA Digital: OTU OC-48/STM-16 (CVS)-tmper	--	--	--	--	--	--	--	Port (OTU IN)	--
TCA Digital: OTU OC-48/STM-16 (ESS)-tmper	--	--	--	--	--	--	--	Port (OTU IN)	--
TCA Digital: OTU OC-48/STM-16 (SESS)-tmper	--	--	--	--	--	--	--	Port (OTU IN)	--

Table A-1 Alarm Condition Table (Events Related To Commands are Italicized) (continued)

WaveStar® OLS 1.6T Conditions/Events[1]	Condition[2]	SONET Original Attribute[3]			SDH Original Attribute[4]			Source Address ID[5]	ASAP Entity Type[6]
		Service Independent	Service Dependent		Service Independent	Service Dependent			
			Service Affecting	Nonservice Affecting		Service Affecting	Nonservice Affecting		
TCA Digital: OTU OC-48/STM-16 (SEFSS)-tmper	--	--	--	--	--	--	--	Port (OTU IN)	--
inhibit alarms-office alarms	Yes	NA	--	--	No Alarm	--	--	System	system
reset in progress	Yes	MJ	--	--	PROMPT	--	--	System	system
test alarm in progress	Yes	NR	--	--	No Report	--	--	System	system
Power A for fan1 failure	Yes	MJ	--	--	PROMPT	--	--	Bay	bay
Power A for fan2 failure	Yes	MJ	--	--	PROMPT	--	--	Bay	bay
TCA Digital: OTU OC-192/STM-64 (CVS)-tmper	--	--	--	--	--	--	--	Port (OTU IN)	--
TCA Digital: OTU OC-192/STM-64 (ESS)-tmper	--	--	--	--	--	--	--	Port (OTU IN)	--

Table A-1 Alarm Condition Table (Events Related To Commands are Italicized) (continued)

WaveStar® OLS 1.6T Conditions/Events[1]	Condition[2]	SONET Original Attribute[3]			SDH Original Attribute[4]			Source Address ID[5]	ASAP Entity Type[6]
		Service Independent	Service Dependent		Service Independent	Service Dependent			
			Service Affecting	Nonservice Affecting		Service Affecting	Nonservice Affecting		
TCA Digital: OTU OC-192/STM-64 (SESS)-tmper	--	--	--	--	--	--	--	Port (OTU IN)	--
TCA Digital: OTU OC-192/STM-64 (SEFSS)-tmper	--	--	--	--	--	--	--	Port (OTU IN)	--
J0 mismatch	Yes	--	--	MN	--	--	DEFERRED	Port (OTU IN)	client
Fan 1 failure	Yes	MJ	--	--	PROMPT	--	--	Bay	bay
Fan 2 failure	Yes	MJ	--	--	PROMPT	--	--	Bay	bay
Power B for Fan 1 failure	Yes	MJ	--	--	PROMPT	--	--	Bay	bay
Power B for Fan 2 failure	Yes	MJ	--	--	PROMPT	--	--	Bay	bay
Power A and Power B for Fan 1 failure	Yes	MJ	--	--	PROMPT	--	--	Bay	bay
Power A and Power B for Fan 2 failure	Yes	MJ	--	--	PROMPT	--	--	Bay	bay

Table A-1 Alarm Condition Table (Events Related To Commands are Italicized) (continued)

WaveStar® OLS 1.6T Conditions/Events[1]	Condition[2]	SONET Original Attribute[3]			SDH Original Attribute[4]			Source Address ID[5]	ASAP Entity Type[6]
		Service Independent	Service Dependent		Service Independent	Service Dependent			
			Service Affecting	Nonservice Affecting		Service Affecting	Nonservice Affecting		
OW1TYPE Mismatch	Yes	MJ	--	--	PROMPT	--	--	Line	supvy
OW2TYPE Mismatch	Yes	MJ	--	--	PROMPT	--	--	Line	supvy
OW3TYPE Mismatch	Yes	MJ	--	--	PROMPT	--	--	Line	supvy
PROVDL-TYPE Mismatch	Yes	MJ	--	--	PROMPT	--	--	Line	supvy
login:user-id	--	--	--	--	--	--	--	Op Intf (UID)	--
login:user-id-DENY	--	--	--	--	--	--	--	Op Intf (UID)	--
logout:user-id	--	--	--	--	--	--	--	Op Intf (UID)	--
logout:user-id-forced disconnect	--	--	--	--	--	--	--	Op Intf (UID)	--
logout:user-id-remote link down	--	--	--	--	--	--	--	Op Intf (UID)	--
logout:user-id-timeout	--	--	--	--	--	--	--	Op Intf (UID)	--
intrusion alert: user-id	--	--	--	--	--	--	--	Op Intf (UID)	--
login deleted: user-id	--	--	--	--	--	--	--	System	--

Table A-1 Alarm Condition Table (Events Related To Commands are Italicized) (continued)

WaveStar® OLS 1.6T Conditions/Events[1]	Condition[2]	SONET Original Attribute[3]			SDH Original Attribute[4]			Source Address ID[5]	ASAP Entity Type[6]
		Service Independent	Service Dependent		Service Independent	Service Dependent			
			Service Affecting	Nonservice Affecting		Service Affecting	Nonservice Affecting		
login created: user-id	--	--	--	--	--	--	--	System	--
login modified: user-id	--	--	--	--	--	--	--	System	--
login expired: user-id	--	--	--	--	--	--	--	System	--
Logins inhibited	Yes	NA	--	--	No Alarm	--	--	System	system
Password expired: user-id	--	--	--	--	--	--	--	System	--
Sw-Dwnld: comm. fail	--	--	--	--	--	--	--	System	--
Sw-Dwnld: erase fail	--	--	--	--	--	--	--	System	--
Sw-Dwnld: flash busy	--	--	--	--	--	--	--	System	--
Sw-Dwnld: write fail	--	--	--	--	--	--	--	System	--
Sw-Dwnld: completed	--	--	--	--	--	--	--	System	--
Backup database installed	--	--	--	--	--	--	--	System	--
Database original values restored	--	--	--	--	--	--	--	System	--

Table A-1 Alarm Condition Table (Events Related To Commands are Italicized) (continued)

WaveStar® OLS 1.6T Conditions/Events[1]	Condition[2]	SONET Original Attribute[3]			SDH Original Attribute[4]			Source Address ID[5]	ASAP Entity Type[6]
		Service Independent	Service Dependent		Service Independent	Service Dependent			
			Service Affecting	Nonservice Affecting		Service Affecting	Nonservice Affecting		
Backup: comm. fail	--	--	--	--	--	--	--	System	--
Backup: completed	--	--	--	--	--	--	--	System	--
Flash access failure	--	--	--	--	--	--	--	System	--
Restore: comm. fail	--	--	--	--	--	--	--	System	--
Restore: format fail	--	--	--	--	--	--	--	System	--
Restore: verification failure	--	--	--	--	--	--	--	System	--
Restore: version mismatch	--	--	--	--	--	--	--	System	--
Restore: write fail	--	--	--	--	--	--	--	System	--
Restore: completed	--	--	--	--	--	--	--	System	--
Download-Software-cmptcode	--	--	--	--	--	--	--	Op Intf (UID)	--
Enter-Registration Manager Attribs-cmptcode	--	--	--	--	--	--	--	Op Intf (UID)	--

Table A-1 Alarm Condition Table (Events Related To Commands are Italicized) (continued)

WaveStar® OLS 1.6T Conditions/Events[1]	Condition[2]	SONET Original Attribute[3]			SDH Original Attribute[4]			Source Address ID[5]	ASAP Entity Type[6]
		Service Independent	Service Dependent		Service Independent	Service Dependent			
			Service Affecting	Nonservice Affecting		Service Affecting	Nonservice Affecting		
Backup-Database-cmptcode	--	--	--	--	--	--	--	Op Intf (UID)	--
Restore-Database-cmptcode	--	--	--	--	--	--	--	Op Intf (UID)	--
Allow-Flash Memory Module-Rmvl-cmptcode	--	--	--	--	--	--	--	Op Intf (UID)	--
Inhibit-Flash Memory Module-Rmvl-cmptcode	--	--	--	--	--	--	--	Op Intf (UID)	--
Sw-Dwnld:IP	Yes	NA	--	--	No Alarm	--	--	System	fixed
Backup:IP	Yes	NA	--	--	No Alarm	--	--	System	fixed
Restore:IP	Yes	NA	--	--	No Alarm	--	--	System	fixed
Flash removal enabled	Yes	--	--	MJ	--	--	PROMPT	Slot (BOS)	pack
OMS (OA) LOS	Yes	--	--	MJ	--	--	PROMPT	Port (OA IN)	oline
OMON LOS	Yes	--	--	MJ	--	--	PROMPT	Port (OMON IN)	oline
WAD incoming optical line LOS	Yes	--	--	MJ	--	--	PROMPT	Line	oline

Table A-1 Alarm Condition Table (Events Related To Commands are Italicized) (continued)

WaveStar® OLS 1.6T Conditions/Events[1]	Condition[2]	SONET Original Attribute[3]			SDH Original Attribute[4]			Source Address ID[5]	ASAP Entity Type[6]
		Service Independent	Service Dependent		Service Independent	Service Dependent			
			Service Affecting	Nonservice Affecting		Service Affecting	Nonservice Affecting		
BC Bus failure	Yes	--	--	MJ	--	--	PROMPT	Bay	bay
Bay Bus failure	Yes	--	--	MJ	--	--	PROMPT	System	system
OH Bus failure	Yes	--	--	MJ	--	--	PROMPT	System	system
RM unreachable	Yes	--	--	MJ	--	--	PROMPT	System	fixed
DSA unreachable	Yes	--	--	MJ	--	--	PROMPT	System	fixed
Invalid primary DSA address	Yes	--	--	MJ	--	--	PROMPT	System	fixed
Local SUPVY DL failure	Yes	MJ	--	--	PROMPT	--	--	Line	supvy
Express SUPVY DL failure	Yes	MJ	--	--	PROMPT	--	--	Line	supvy
Topology construction in progress	Yes	MJ	--	--	PROMPT	--	--	System	system
Topology construction incomplete	Yes	MJ	--	--	PROMPT	--	--	System	system
Incoming OC-48/STM-16 LOS failure	Yes	--	--	MN	--	--	DEFERRED	Port (OTU IN)	client

Table A-1 Alarm Condition Table (Events Related To Commands are Italicized) (continued)

WaveStar® OLS 1.6T Conditions/Events[1]	Condition[2]	SONET Original Attribute[3]			SDH Original Attribute[4]			Source Address ID[5]	ASAP Entity Type[6]
		Service Independent	Service Dependent		Service Independent	Service Dependent			
			Service Affecting	Nonservice Affecting		Service Affecting	Nonservice Affecting		
Incoming OC-192/STM-64 LOS failure	Yes	--	--	MN	--	--	DEFERRED	Port (OTU IN)	client
Incoming HSBB LOS failure	Yes	--	--	MN	--	--	DEFERRED	Port (OTU IN)	client
Incoming OCH10G LOS failure	Yes	--	--	MN	--	--	DEFERRED	Port (OTU IN)	ochan
Incoming OC-48/STM-16 LOF failure	Yes	--	--	MN	--	--	DEFERRED	Port (OTU IN)	client
Incoming OC-192/STM-64 LOF failure	Yes	--	--	MN	--	--	DEFERRED	Port (OTU IN)	client
Incoming OCH10G LOF failure	Yes	--	--	MN	--	--	DEFERRED	Port (OTU IN)	ochan
Incoming HSBB LOL	Yes	--	--	MN	--	--	DEFERRED	Port (OTU IN)	client
OTU LASER shut off	Yes	--	--	NA	--	--	No Alarm	Port (OTU IN)	client
Restore:TID mismatch failure	--	--	--	--	--	--	--	System	--
Clogged dust filter1	Yes	MN	--	--	DEFERRED	--	--	Bay	bay
Clogged dust filter2	Yes	MN	--	--	DEFERRED	--	--	Bay	bay

Table A-1 Alarm Condition Table (Events Related To Commands are Italicized) (continued)

WaveStar® OLS 1.6T Conditions/Events[1]	Condition[2]	SONET Original Attribute[3]			SDH Original Attribute[4]			Source Address ID[5]	ASAP Entity Type[6]
		Service Independent	Service Dependent		Service Independent	Service Dependent			
			Service Affecting	Nonservice Affecting		Service Affecting	Nonservice Affecting		
Abort-Database-Backup-cmptcode	--	--	--	--	--	--	--	Op Intf (UID)	--
TCA Optics: OTU HSBB (OPR)	Yes	--	--	NA	--	--	No Alarm	Port (OTU IN)	fixed
TCA Optics: OTU HSBB (OPT)	Yes	--	--	NA	--	--	No Alarm	Port (OTU IN)	fixed
TCA Optics: OTU HSBB (LBC)	Yes	--	--	NA	--	--	No Alarm	Port (OTU IN)	fixed
TCA Digital: OTU OC-192/STM-64 (FEC-EC)-tmper	--	--	--	--	--	--	--	Port (OTU IN)	--
TCA Digital: OTU OC-192/STM-64 (FEC-UBC)-tmper	--	--	--	--	--	--	--	Port (OTU IN)	--
Backup: user-aborted	--	--	--	--	--	--	--	System	--
CP not in service indicated	Yes	NA	--	--	No Alarm	--	--	Slot	slot

Table A-1 Alarm Condition Table (Events Related To Commands are Italicized) (continued)

WaveStar® OLS 1.6T Conditions/Events[1]	Condition[2]	SONET Original Attribute[3]			SDH Original Attribute[4]			Source Address ID[5]	ASAP Entity Type[6]
		Service Independent	Service Dependent		Service Independent	Service Dependent			
			Service Affecting	Nonservice Affecting		Service Affecting	Nonservice Affecting		
OPR-NIS-IND-cmptcode	--	--	--	--	--	--	--	Op Intf (UID)	--
RLS-NIS-IND-cmptcode	--	--	--	--	--	--	--	Op Intf (UID)	--
Set-Baseline-Oline-TOPR-auto	--	--	--	--	--	--	--	Line	--
Set-Baseline-Oline-TOPT-auto	--	--	--	--	--	--	--	Line	--
Set-Baseline-Ochan-SPR-auto	--	--	--	--	--	--	--	Channel (Optical)	--
Set-Baseline-Ochan-SPT-auto	--	--	--	--	--	--	--	Channel (Optical)	--
Set-Baseline-Supr-SPR-auto	--	--	--	--	--	--	--	Port (SUPVY IN)	--
Set-Baseline-Supr-SPT-auto	--	--	--	--	--	--	--	Port (SUPVY IN)	--
Wave-Wrapper path trace mismatch	Yes	--	--	MN	--	--	DEFERRED	Port (OTU IN)	ochan
Circuit Pack Panic and Recovery	--	--	--	--	--	--	--	Slot	--
SUPVY line-1 and line-2 connection mismatch	Yes	MJ	--	--	PROMPT	--	--	Line	supvy
Remote Node Ready to Recover	Yes	MJ	--	--	PROMPT	--	--	Line	oline

Table A-1 Alarm Condition Table (Events Related To Commands are Italicized) (continued)

WaveStar® OLS 1.6T Conditions/Events[1]	Condition[2]	SONET Original Attribute[3]			SDH Original Attribute[4]			Source Address ID[5]	ASAP Entity Type[6]
		Service Independent	Service Dependent		Service Independent	Service Dependent			
			Service Affecting	Nonservice Affecting		Service Affecting	Nonservice Affecting		
unexpected channel	Yes	--	--	MN	--	--	DEFERRED	Channel (Optical)	fixed
APSD disabled	Yes	MJ	--	--	PROMPT	--	--	System	system
TCA Optics: OTU LSBB (OPR)	Yes	--	--	NA	--	--	No Alarm	Port (OTU IN)	fixed
TCA Optics: OTU LSBB (LBC)	Yes	--	--	NA	--	--	No Alarm	Port (OTU IN)	fixed
Enter-OCHTRC-cmptcode	--	--	--	--	--	--	--	Op Intf (UID)	--
Initialize-Register-OTPS:port(otps)-cmptcode	--	--	--	--	--	--	--	Op Intf (UID)	--
inhibit orderwire protection switch	Yes	NA	--	--	No Alarm	--	--	System	system
Edit-ASAP-Profile-cmptcode	--	--	--	--	--	--	--	Op Intf (UID)	--
Enter-ASAP-Profile-cmptcode	--	--	--	--	--	--	--	Op Intf (UID)	--
Delete-ASAP-Profile-cmptcode	--	--	--	--	--	--	--	Op Intf (UID)	--

Table A-1 Alarm Condition Table (Events Related To Commands are Italicized) (continued)

WaveStar® OLS 1.6T Conditions/Events[1]	Condition[2]	SONET Original Attribute[3]			SDH Original Attribute[4]			Source Address ID[5]	ASAP Entity Type[6]
		Service Independent	Service Dependent		Service Independent	Service Dependent			
			Service Affecting	Nonservice Affecting		Service Affecting	Nonservice Affecting		
Enter-Profile-Assignment-cmptcode	--	--	--	--	--	--	--	Op Intf (UID)	--
Circuit Pack Insertion	--	--	--	--	--	--	--	Slot	--
Circuit Pack Removal	--	--	--	--	--	--	--	Slot	--
Circuit Pack Ready for retrieve bay	--	--	--	--	--	--	--	Bay	--
Circuit Pack Ready for retrieve slot	--	--	--	--	--	--	--	Slot	--
DCM failure	Yes	--	--	MJ	--	--	PROMPT	Port (OA DCM IN)	fixed
PM-FTAM link: reserved	--	--	--	--	--	--	--	System	--
PM-FTAM link:abort	--	--	--	--	--	--	--	System	--
PM Upload:IP	Yes	NA	--	--	No Alarm	--	--	System	fixed
PM Upload: comm. fail	--	--	--	--	--	--	--	System	--
PM Upload: read/write fail	--	--	--	--	--	--	--	System	--
PM Upload-:completed	--	--	--	--	--	--	--	System	--

Table A-1 Alarm Condition Table (Events Related To Commands are Italicized) (continued)

WaveStar® OLS 1.6T Conditions/Events[1]	Condition[2]	SONET Original Attribute[3]			SDH Original Attribute[4]			Source Address ID[5]	ASAP Entity Type[6]
		Service Independent	Service Dependent		Service Independent	Service Dependent			
			Service Affecting	Nonservice Affecting		Service Affecting	Nonservice Affecting		
Automatic Orderwire Protection Switch	--	--	--	--	--	--	--	Line	--
Automatic Orderwire Protection Switch fail	--	--	--	--	--	--	--	Line	--
Provision-System-cmptcode	--	--	--	--	--	--	--	Op Intf (UID)	--
TCA Optics: OLINE (PLE-RP1)	Yes	--	--	NA	--	--	No Alarm	Line	fixed
TCA Optics: OLINE (PLE-RP2)	Yes	--	--	NA	--	--	No Alarm	Line	fixed
TCA Optics: OLINE (PLE-RP3)	Yes	--	--	NA	--	--	No Alarm	Line	fixed
TCA Optics: OLINE (PLE-RP4)	Yes	--	--	NA	--	--	No Alarm	Line	fixed
TCA Optics: OLINE (PLE-RP5)	Yes	--	--	NA	--	--	No Alarm	Line	fixed
TCA Optics: OLINE (PLE-RP6)	Yes	--	--	NA	--	--	No Alarm	Line	fixed
TCA Optics: OLINE (PLE-TP1)	Yes	--	--	NA	--	--	No Alarm	Line	fixed

Table A-1 Alarm Condition Table (Events Related To Commands are Italicized) (continued)

WaveStar® OLS 1.6T Conditions/Events[1]	Condition[2]	SONET Original Attribute[3]			SDH Original Attribute[4]			Source Address ID[5]	ASAP Entity Type[6]
		Service Independent	Service Dependent		Service Independent	Service Dependent			
			Service Affecting	Nonservice Affecting		Service Affecting	Nonservice Affecting		
TCA Optics: OLINE (PLE-TP2)	Yes	--	--	NA	--	--	No Alarm	Line	fixed
TCA Optics: OLINE (PLE-TP3)	Yes	--	--	NA	--	--	No Alarm	Line	fixed
TCA Optics: OLINE (PLE-TP4)	Yes	--	--	NA	--	--	No Alarm	Line	fixed
TCA Optics: OLINE (PLE-TP5)	Yes	--	--	NA	--	--	No Alarm	Line	fixed
TCA Optics: OLINE (PLE-TP6)	Yes	--	--	NA	--	--	No Alarm	Line	fixed
WAD ADD LOS	Yes	--	--	MJ	--	--	PROMPT	Port (WAD IN)	oline
Outdated boot flash	Yes	NA	--	--	No Alarm	--	--	Slot	pack

Table A-1 Alarm Condition Table (Events Related To Commands are Italicized) (continued)

WaveStar® OLS 1.6T Conditions/Events[1]	Condition[2]	SONET Original Attribute[3]			SDH Original Attribute[4]			Source Address ID[5]	ASAP Entity Type[6]
		Service Independent	Service Dependent		Service Independent	Service Dependent			
			Service Affecting	Nonservice Affecting		Service Affecting	Nonservice Affecting		
Clamping transmit OA to output O-channel power	Yes	--	--	MJ	--	--	PROMPT	Slot (OA)	pack

1. Conditions/Events: Conditions persist in time and Events occur at a particular instance in time. Conditions are identified by a ″Yes″ in the ″Condition″ column (which was ″CIT Alarm Report″) of this table. Events related to commands are italicized. ″cmptcode″ is used at the end of the TL1 command name in this column. It means that the event is either completed or denied. ″tmper″ is used at the end of the TCA Digital events and it stands for ″time period″. It is used to distinguish the message for the 15 minute or 1 day bin. ″tmper″ can either have the value ″15-MIN″ or ″1-DAY″.
2. Condition: It replaces ″CIT Alarm Report″. Every row that has a ″Yes″ in this column is a standing condition. Every standing condition consists of a pair of events: the start of the condition and the ″cleared″ of the condition. The name of the start event is the name of the condition. The name of the ″cleared″ event is the condition name with ″-cleared″ appended to the end of the condition name with no spaces. Every row that has a ″--″ in this column is an event that is neither associated with the start nor the ″cleared″ of a standing condition.
3. SONET Original Attribute (SA/nsa): It is the original value of the SONET Alarm Attribute of the alarm condition (that is, Critical (CR), Major (MJ) or Minor (MN)) and the status condition (that is, Not Alarmed (NA) or Not Reported (NR)).
4. SDH Original Attribute (SA/nsa): It is the original value of the SDH Alarm Attribute of the alarm condition (that is, PROMPT or DEFERRED) and the status condition (that is, No Alarm (NA) or No Report (NR)).
5. Source Address ID: It is the location for the Conditions/Events in the system. ″Op Intf (UID)″, Operational Interface (User ID), is an entry in this column. It is the User login ID that executes the command. OLS 1.6T R1 user default Id is LUC01.
6. ASAP Entity Type: It consists of the following types: bay, client, com, env, ochan, oline, pack, shelf, slot, supvy, sw, system. They are grouped by ASAP types in the separate sheets labeled below. The fixed type is NOT an ASAP type and it will be shown in italics. The fixed type are those conditions/events that have alarm severity but are non-provisionable. Com is a valid ASAP type but is currently not used.

Appendix B: Character Set Definitions

Overview

Purpose This appendix provides information about the Character Sets available on the WaveStar® OLS 1.6T.

□

Symbolic Character Set

Definition Refer to Table B-1, “Symbolic Characters” (B-2) for the set of symbolic characters for use in User Login ID and Password applications.

Table B-1 Symbolic Characters

!	*	/	]	|
’	+	<	^	}
(	-	>	’	~
)	.	[	{	

Numeric Character Set

Definition Refer to Table B-2, "Numeric Character Set" (B-3) for the set of numeric characters for use in User Login ID and Password applications.

Table B-2 Numeric Character Set

0	1	2	3
4	5	6	7
8	9		

Alphabetic Character Set

Definition Refer to Table B-3, "Alphabetic Character Set" (B-4) for the set of alphabetic characters for use in User Login ID and Password applications.

Table B-3 Alphabetic Character Set

A	B	C	D
E	F	G	H
I	J	K	L
M	N	O	P
Q	R	S	T
U	V	W	X
Y	Z	a	b
c	d	e	f
g	h	i	j
k	l	m	n
o	p	q	r
s	t	u	v
w	x	y	z

Glossary

A

ABN
Abnormal (condition).

Access Identifier (AID)
A unique identifier used to address equipment slots and ports, as well as facility tributaries, that are defined for the OLS architecture.

ACO
Alarm Cutoff

AGNE
Alarm Gateway Network Element

AID
Access Identifier

AIM
Alarm Indication Message

AIS
Alarm Indication Signal

Alarm
A visible or audible signal that indicates a communication, equipment, or processing failure has occurred.

Alarm Cut-Off (ACO)
A push-button switch on the indicator strip that can be used to retire an audible office alarm.

Alarm Gateway Network Element (AGNE)
A defined Network Element in an alarm group through which members of the alarm group exchange information.

Alarm Indication Signal (AIS)
A code transmitted downstream in a digital network indicating that an upstream failure has been detected and alarmed if the upstream alarm has not been suppressed.

Alarm List
A status report that lists active alarms on the network element.

Alarm Log
A history of the setting and clearing of system alarms on the network element.

Alarm Severity
An attribute defining the priority of the alarm message. The way alarms are processed depends on the severity.

Alarm Suppression
Selective removal of alarm messages from being forwarded to the GUI or to network management layer OSs.

Alarm Throttling
A feature that automatically or manually suppresses autonomous messages that are not priority alarms.

Aligning
Indicating the head of a virtual container by means of a pointer, for example, creating an Administrative Unit (AU) or a Tributary Unit (TU).

Alternate Mark Inversion (AMI)
A line code that employs a ternary signal to convert binary digits, in which successive binary ones are represented by signal elements that are normally of alternative positive and negative polarity but equal in amplitude, and in which binary zeros are represented by signal elements that have zero amplitude.

American Standard Code for Information Interchange (ASCII)
A standard 7-bit code that represents letters, numbers, punctuation marks, and special characters in the interchange of data among computing and communications equipment.

Amplitude
Amplitude is a measure of the intensity of the wave and is defined as the distance from the center of the wave to its peak (half the distance from peak to peak).

APD
Avalanche Photo Diode

APSD
Automatic Power Shutdown

Area
A group of nodes in which there is only IS-IS Level 1 routing of traffic. Nodes in an Area do not maintain detailed routing information to nodes outside the area.

Area Address
A variable length quantity consisting of the entire high order part of the Network Service Access Point (NSAP) excluding the 6 byte System Identifier (SID) and Selector (SEL). Used for interarea routing through the Level 2 subdomain.

Area ID
A user provisionable four digit (Hex) number that is used for IS-IS routing purposes in a network.

Asynchronous
Refers to network elements that are not timed from references traceable to a single Stratum-1 source.

Attribute
Alarm indication level: critical, major, minor, or no alarm.

AUTO
Automatic

Automatic (AUTO)
One possible state of a port or slot. When a port is in the AUTO state and a good signal is detected, the port automatically enters the IS (in-service) state. When a slot is in the AUTO state and a circuit pack is detected, the slot automatically enters the EQ (equipped) state.

Automatic Power Shutdown (APSD)
A safety procedure automatically performed by the OLS when a loss of optical power occurs. APSD powers down the Optical Amplifier to safe, Class 1 levels then restarts it once the system has been repaired or links have been re-established.

Automatic Protection Switch
A protection switch that occurs automatically in response to an automatically detected fault condition.

Avalanche Photo Diode (APD)
APD is a receiver that translates optical signals back to electrical pulses.

B

Backup
The backup and restoration features provide the capability to recover from loss of NE data because of such factors as human error, power failure, NE design flaws, and software bugs.

Bandwidth
The difference in Hz between the highest and lowest frequencies in a transmission channel. The data rate that can be carried by a given communications circuit.

Baud Rate
Transmission rate of data (bits per second) on a network link.

Bay
A hardware frame in which shelves are mounted and housed.

BCLAN
Board Controller Local Area Network

BER
Bit Error Rate

BES
Bursty Errored Second Count

Bidirectional Line
A transmission path consisting of two fibers that handle traffic in both the transmit and receive directions.

BIP-N
Bit Interleaved Parity

Bit
The smallest unit of information in a computer, with a value of either 0 or 1.

Bit Error Rate (BER)
BER measures how accurately a bit stream is transmitted through a system. It measures how many bits are received in error compared to how many are sent.

Bit Error Rate Threshold
The point at which an alarm is issued for bit errors.

Bit Interleaved Parity-N (BIP-N)
A method of error monitoring over a specified number of bits (BIP-3 or BIP-8).

Board Controller Local Area Network (BCLAN)
The internal local area network that provides communications between the line and board controllers on the circuit packs associated with a high-speed line.

BOS
Bay/Overhead/System controller

BRM
Bit Rate Map

Broadband Communications
Voice, data, and/or video communications at greater than 2 Mb/s rates.

BW
bandwidth

Byte
Refers to a group of eight consecutive binary digits.

C

C+L Separator and Combiner (CLSC) Apparatus Units
The CLSC apparatus unit combines two independent DWDM line systems (one using the C-band, and the other using the L-band) onto a single fiber pair. In transmission paths, Single C+L Separator and Combiner (CLSC-S) and Double C+L Separator and Combiner (CLSC-D) apparatus units are used for C+L applications. CLSC-S is used in terminal systems, and CLSC-D is used in repeater/ring sites.

CCITT
Comité Consultatif International Télégraphique et Téléphonique. See ITU-T.

CD-ROM
compact disk–read-only memory

Central Office (CO)
A building where common carriers terminate customer circuits.

Channel
A sub-unit of transmission capacity within a defined higher level of transmission capacity.

Circuit Pack (CP)
A single field-replaceable electronic or opto-electronic unit. It comprises mechanical piece-parts, electronic components, and their associated connections and performs a specific function.

CIT
Craft Interface Terminal

CIT-PC
PC Based Craft Interface Terminal

CLEI
Common Language Equipment Identifier

Closed Ring Network
A network formed of a ring-shaped configuration of network elements. Each network element connects to two others, one on each side.

CLSC
C+L Separator and Combiner apparatus unit

CLSC-D
C+L Separator and Combiner apparatus unit with Double Separator and Combiner functions

CLSC-S
C+L Separator and Combiner apparatus unit with Single Separator and Combiner functions

CMISE
Common Management Information Service Element

CMS
See customer maintenance signal

CO
Central Office

CO-LAN
central office local area network

Coding Violation (CV)
A performance monitoring parameter indicating that bipolar violations of the signal have occurred.

Collocated
Located in the same Central Office

Comcode
Lucent Technologies ordering code for cables and other equipment.

Common Language Equipment Identifier (CLEI)
Codes that are assigned by Bellcore to provide a standard method of identifying telecommunications equipment in a uniform, feature-oriented language. Bellcore GR-485-CORE specification contains generic guidelines for Common Language Equipment Coding Processes and Guidelines.

Common Management Information Service Element (CMISE)
Entities that the Common Management Information Protocol (CMIP) uses to communicate. CMISE exchanges network management information between two management systems, or between a management system and an application. CMIP/CMISE is designed for OSI networks,

but it is transport independent.

Concatenation
A procedure whereby multiple virtual containers are associated one with each other resulting in a combined capacity that can be used as a single container across which bit sequence integrity is maintained.

Configuration Management (CM)
Subsystem that configures the network and processes messages from the network.

Consultative Committee for the International Telephone and Telegraph (CCITT)
International Telephone and Telegraph Consultative Committee — An international advisory committee under United Nations' sponsorship that has composed and recommended for adoption worldwide standards for international communications. Recently changed to the International Telecommunications Union Telecommunications Standards Sector (ITU-TSS).

CPM
Cross Phase Modulation (same as XPM)

CR
Critical (alarm)

Craft Interface Terminal (CIT)
The user interface terminal that meets OLS minimum requirements and is used by craft personnel to communicate with a network element.

Craft Interface Terminal - Personal Computer (CIT- PC)
A personal computer that meets OLS minimum requirements and is used by craft personnel to communicate with a network element.

CRC
Cyclic Redundancy Check

Critical (CR)
Alarm that indicates a severe, service-affecting condition.

CS&O
Lucent Technologies Customer Support and Operations

CTAM
Customer Technical Assistance Management

CTNEQPT
Facility/circuit interconnection equipment failure. This condition type is for internal optical LOS defects (fiber connections) between CPs.

Current Value
The value currently assigned to a provisionable parameter.

CV
Coding Violation

CVS
Coding Violation Count - Section Near End

Cyclic Redundancy Check (CRC)
A method of error detection using cyclic redundancy code. A CRC value is generated at the transmitting terminal, based on the contents of the message transmitted. An identical CRC generation is performed at the receiving terminal and if it does not match, the message was received incorrectly.

D

Data
A collection of system parameters and their associated values.

Data Communication Network (DCN)
The Data Communication Network (DCN) supports communications between WaveStar® OLS 1.6T and the network management system (SNMS). OSI based networks, formed by Q-LAN and SDL overhead bytes, performs the communications between the SNMSs and the manages NEs (OLS).

Data Communications Channel (DCC)
The embedded overhead communications channel in the synchronous line, used for end-to-end communications and maintenance. The DCC carries alarm, control, and status information between network elements in a synchronous network.

Data Communications Equipment (DCE)
The equipment that provides the signal conversion and coding between the data terminating equipment and the line. The DCE may be separate equipment or a part of the data terminating equipment.

Data Terminating Equipment (DTE)
The equipment that originates data for transmission and accepts transmitted data.

dB
Decibels

dBm
Decibels relative to 1 milli-watt

DCC
Data Communications Channel

DCE
Data Communications Equipment

DCM
Dispersion Compensation Module

DCN
Data Communication Network

DCN
Refer to Data Communication Network

DDM-2000
Lucent Technologies SONET-ready network multiplexer that can function as a lightwave terminal. It is designed primarily for loop feeder and interoffice applications that will work in existing asynchronous as well as the emerging SONET networks.

Dedicated Protection Ring (DP-Ring)
A protection method used in ISM Network Elements.

Default
An operation or value that the system or application assumes, unless a user makes an explicit choice.

Default Provisioning
The parameter values that are preprogrammed as shipped from the factory.

Demultiplexer
A device that splits a combined signal into individual signals at the receiver end of transmission.

Demultiplexing
A process applied to a multiplexed signal for recovering signals combined within it and for restoring the distinct individual channels of these signals.

Dense Wavelength Division Multiplexing (DWDM)
Transmitting two or more signals of different wavelengths simultaneously over a single fiber.

Designated Router
Function of the IS-IS protocol. A Pseudo or Virtual node on the LAN subnet, which assumes much of the routing tasks for the LAN circuit. One of the physical nodes does the actual work. This node is the Designated Router (DR). Election of the DR depends first on the circuit

priority and second on the SID (or MAC address).

Designated Router Priority
The routing priority level assigned to a node. The value of this parameter is used for the selection of the designated router per area on a LAN. The node with the highest priority will fulfill the designated router function. If two nodes that the same priority level, then the SID (MAC address) is used to select a designated router.

DFB
Distributed Feed Back

Digital Link
A transmission span such as a point-to-point 2 Mb/s, 34 Mb/s, 140 Mb/s, VC12, VC3 or VC4 link between controlled network elements. The channels within a digital link are insignificant.

Digital Multiplexer
Equipment that combines several digital signals into a single composite digital signal by time-division multiplexing.

Directory Service Network Element (DS-NE)
A designated network element that is responsible for administering a database that maps network element names (TIDs) to addresses [NSAPs (network service access points). There can be one DS-NE per ring.

Directory System Agent (DSA)
The Directory System Agent maintains the directory database and accesses the directory database on behalf of the requesting directory user agent; resides on SNMS.

Dispersion
The phenomenon in which different wavelengths or different polarizations of light travel at different speeds through a fiber optic cable.

Dispersion Compensation Fiber (DCF)
A special fiber with high negative value of dispersion. It is used as an inline pre- or post-equalization in the form of a fiber spool placed at the end of a link.

Dispersion Compensation Module (DCM)
The Dispersion Compensating Module (DCM) is used to overcome chromatic dispersion limits of the transmission fiber. The DCM is a passive module containing dispersion compensation fiber that offsets the outside fiber plant.

Dispersion Shifted Fiber
Optical fiber that uses a different internal configuration, which changes the chromtic dispersion point to 1330/1550 nm minimum dispersion wavelength.

Divergence
When the OA provides unequal amplification of incoming wavelengths, the result is a power divergence between wavelengths.

DLP
Detail Level Procedure

Domain
A set of OLS nodes/entities that are interconnected to perform some specific function in a network (for example, manager-domain where all nodes are managed by the same manager or group of managers.)

Doping
The addition of impurities to a substance in order to attain desired properties.

DRAM
Dynamic Random Access Memory

Drop Side Signal
An optical signal suitable for transmission over OLS.

DS-NE
Directory Service Network Element

DS3
Digital Signal Level 3 (44.736 Mb/s)

DSA
Refer to Directory System Agent.

DSF
Dispersion Shifted Fiber

DTE
Data Terminating Equipment

Dual Ring Interworking
A configuration of two ring networks that share two common nodes. DRI permits a circuit with one termination in one ring and one termination in another ring to survive a loss-of-signal failure of the shared node that is currently carrying service for the circuit.

DWDM
Dense Wavelength Division Multiplexing

Dynamic Random Access Memory (DRAM)
RAM which requires electronic refresh cycles every few milliseconds to preserve its data.

Dynamic Routing on a LAN
No pre-defined ethernet address is used for routing from SNMS to a managed NE. The IS on the LAN that receives the messages will notify the ES (SNMS) when a better route is available.

E

EC-1
Electrical Carrier level-1 signal

ECI
Equipment Catalog Item

EDFA
Erbium Doped Fiber Amplifier

EEPROM
Electrically Erasable Programmable Read-Only Memory

EI
External Interface

Electrical Carrier Level- 1 (EC-1)
An STS-1 signal that has been shaped and encoded for transmission over electrical media.

Electromagnetic Compatibility (EMC)
A measure of equipment tolerance to external electromagnetic fields.

Electromagnetic Interference (EMI)
High-energy, electrically induced magnetic fields that cause data corruption in cables passing through the fields.

Electromagnetic Spectrum
The different wavelengths of light in the visible spectrum (light the human eye can see), that appear as different colors.

Electronic Industries Association (EIA)
A trade association of the electronic industry that establishes electrical and functional standards.

Electrostatic Discharge (ESD)
Static electrical energy potentially harmful to circuit packs and humans.

EMC
Electromagnetic Compatibility

EMI
Electromagnetic Interference

EML
Electro-absorption Modulated Laser

End Terminal
The OLS equipment that terminates up to eighty (80) optical line signals.

Engineering Rules
A set of rules that determine OLS system configuration possibilities based on fiber type. OA, rate and number of wavelengths. These rules determine the maximum loss per span that can be tolerated, the maximum distance between spans allowed and the maximum number of spans that can be supported.

EOL
End Of Life

EQ
Equipped

Equipped (EQ)
A memory administrative state for slots.

Erbium
A soft rare earth element used in metallurgy and nuclear research.

Erbium Doped Fiber Amplifier (EDFA)
An amplifier that performs by having a light signal pass through a section of erbium- doped fiber and using the laser pump diode to amplify the signal.

Errored Seconds (ES)
A performance monitoring parameter.

ES
Errored Seconds

ESD
Electrostatic Discharge

ESS
Errored Second Count - Section Near End

ET
End Terminal

Event
1. A fault, inconsistency, or communication problem. 2. An autonomous message put out by the system to indicate that a fault or inconsistency has occurred; messages appear in a craft interface window as they occur and can indicate trouble or be solely informational.

Express Traffic
In a WAD site, wavelengths going between two co-located OLS end terminals without going through an LCT.

F

Failures in Time (FIT)
Circuit pack failure rates per 10^9 hours as calculated using the method described in ***Reliability*** Prediction Procedure for Electronic Equipment, Issue 4, September 1992.

Far End (FE)
Any other network element in a maintenance subnetwork other than the one the user is at or working on. Also called remote.

Far-End Receive Failure (FERF)
An indication returned to a transmitting Network Element that the receiving Network Element has detected an incoming section failure. Also known as RDI (Remote Detect Indication).

Far-End-Block Error (FEBE)
An indication returned to the transmitting terminal that an errored block has been detected at the receiving terminal. A block is a specified grouping of bits.

Fault
Term used when a circuit pack has a hard (not temporary) fault and cannot perform its normal function.

Fault Management
Collecting, processing, and forwarding of autonomous messages from network elements.

FDI
Forward Defect Indicator

FE ACTY
Far-End Activity

FEBE
Far-End-Block Error

FEC
Forward Error Correction

FERF
Far End Receive Failure. See RDI.

FIT
Failures in Time

Forward Error Correction (FEC)
A technique used for error detection and correction in which the transmitting host computer includes some number of redundant bits in the payload (data field) of a block or frame of data. The receiving device uses those bits to detect, isolate and correct any errors created in transmission. FEC avoids having to retransmit information which incurred errors in network transit.

Frequency
The frequency of a wave indicates how frequently it cycles or changes. It is the number of cycles per one second intervals. Frequency is usually measured in Hertz.

FTP
file transfer protocol

FWM
Four Wave Mixing

G

Gateway Network Element (GNE)
A Gateway Network Element (GNE) is a WaveStar® OLS 1.6T node that has a physical attachment to the SNMS to support the access of the remote Network Elements. The number of remote NEs a GNE can serve is specified in terms of the number of OSI stack associations the GNE can support without running out of local resources.

GB
gigabyte

Gb/s
Gigabits per second

GHz
Gigahertz

GNE
Gateway Network Element

GUI
Graphical User Interface

H

Hazard Level

Output power level of an OLS system or device that poses safety risks to personnel. For 1550 nm wavelengths, hazard levels are defined as follows:

- Level 1 = > 10 dBm
- Level 1M = > 21.3 dBm
- Level 3B = > 27 dBm
- Level 4 = > 27 dBm

High Speed Broadband (HSBB) Optical Translator Unit

The High Speed Broadband Optical Translator Unit (HSBB OTU) translates incoming wavelengths into those compatible with the OLS 400G. The HSBB OTU is capable of handling SONET/SDH and other asynchronous optical signals within the broadband range.

Hop

Span across a LAN or between nodes, such as from an End Terminal to a Repeater, or from Repeater to Repeater.

Hop

Span across a LAN or between Nodes, such as from an End Terminal to a Repeater, or from Repeater to Repeater.

HSBB

High Speed Broadband

Hz

Hertz

I

IAOLAN

IntrAOffice Local Area Network

IEC

International Electrotechnology Commission or Interexchange Carrier

In-Service (IS)

A memory administrative state for ports. IS refers to a port that is fully monitored and alarmed.

Intermediate System

A node in the OLS network that performs the router and forwarding function. An OLS node behaves both as an ES as well as an IS node.

Intermediate System to Intermediate System (IS-IS)

IS-IS is a routing exchange protocol (OSI Network Layer Routing Protocol).

IR
Intermediate Reach

IS
In Service

IS Level 1
All nodes in a single Area use IS-IS Level 1 OSI routing protocol for routing traffic.

IS Level 2
IS-IS protocol is provisioned when the number of OLS nodes has exceeded the maximum level of nodes that can be managed and the nodes are separated into Areas. IS Level 2 is used for communication between Areas. IS Level 2 protocol works only between OLS nodes that are designated as Level 2 nodes.

IS-IS
Intermediate System to Intermediate System

ITCO
Independent Telephone Company

ITU-T
International Telecommunications Union–Telecommunications

IXC
Interexchange Carrier

IXL
Index List

J

Jitter
Jitter is defined as short-term variations of the significant instants of a digital signal from their ideal positions in time.

K

Kb/s
Kilobits per second

km
kilometer

Krypton line
1547.82 nm —wavelength used in a standard laser source.

L

LAN
Local Area Network

LBC
Laser bias current

LBC-P
Laser Bias Current for Pump

LBC-SU
Laser Bias Current - Supervisory

LBFC
Laser backface currents

LBFC-P
Laser Backface Current for Pump

LBO
Lightguide Build-Out

LC
Lucent - made connector, 0.1 dB typical loss

Lead time
The amount of time that passes between placement of a product order and receipt of the product.

LEC
Local exchange carrier

LED
Light-emitting diode

Level 1 Node
A Level 1 Node has the capability of communicating with all Level 1 Nodes in the Area of which it is a member. Level 1 Nodes cannot communicate with nodes outside of its own area. The Node can be an external router or an OLS 400G.

Level 1 Ring
A Level 1 Ring is composed of only Level 1 Nodes. A Level 2 Node performing as both a Level 2 Node and a Level 1 Node can be part of the Level 1 Ring.

Level 2 Node

A Level 2 Node can communicate with other Level 2 Nodes in its subdomain. This provides the ability for communications between Areas via the Level 2 Nodes. In addition, the Level 2 Node communicates with the Level 1 Nodes in its Area. The Node can be an external router or OLS 400G.

Level 2 Ring

A set of Level 2 Nodes located within the same routing domain that connects all areas of the OLS network.

Level 2 Subdomain

A set of Level 2 Nodes located within the same routing domain that connects all areas of the OLS network.

LFA

Loss of Frame Assignment

LGX

Lightguide cross-connect.

Lightguide Build-Out (LBO)

An adapter for the lightguide fiber jumpers between the LGX, OLS, and OT equipment. It is also used on equipment within the network element. It performs signal attenuation and guarantees the proper signal level to OLS and OT equipment.

Line

1. An optical transmission line. In T1/Bellcore terminology, ″line″ refers to a transmission medium, together with the associated high speed equipment, required to provide the means of transporting information between two consecutive network elements; one originates the line signal while the other terminates it. ***2.*** ″Line″ also indicates a fiber pair. When used in this document, the following is assumed: 1 line = 2 fibers, 4 line = 8 fibers.

Line Build-out (LBO)

An attenuator placed between a Lightwave system and the LGX (equivalent.) It guarantees the optical level will be below the receiving equipment's maximum received power requirements.

LIU

Line Interface Unit

Local Area Network (LAN)

A communications network that covers a limited geographic area, is privately owned and user administered, is mostly used for internal transfer of information within a business, is normally contained within a single building or adjacent group of buildings, and transmits data at a very rapid speed.

Local Traffic
All wavelengths being added/dropped through LCTs or OTs at a WAD site.

LOF
Loss of Frame

LOL
Loss of Lock

Long Reach (LR)
A standard for optics, concerning transmitters and receivers in a system and ensuring that transmission can be maintained for long distances (tens of kilometers). This standard constrains the output power of the transmitter and the sensitivity of the receiver for long-haul applications (up to 80 km) without the need for regeneration.

LOS
Loss of Signal

Loss Budget
Loss (in dB) of optical power due to the span transmission medium (includes fiber loss and splice losses).

Loss of Frame (LOF)
A failure to synchronize to an incoming signal.

Loss of Pointer (LOP)
A failure to extract good data from a signal payload.

Loss of Signal (LOS)
The complete absence of an incoming signal.

Low Speed Broadband (LSBB) Optical Translator Unit
The Low Speed Broadband (LSBB) Optical Translator Unit (OTU20) consists of two independent optical translators each operating at bit rates from 45 Mb/s to 750 Mb/s. The OTU receives two compatible optical signals between 1300 nm and 1565 nm, and converts them into electrical signals, which are then amplified and regenerated. These electrical signals are then converted back into optical signals and are transmitted in the 1550 nm band.

LSBB
Low Speed Broadband

M

Maintenance Subnetwork
A group of network elements that are connected either in an open ring with an End Terminal at each end, or a closed ring via an optical supervisory data link. A network topology map of the

maintenance subnetwork can be generated via any one of the network elements in the local transmission ring.

Menu
A set of possible values for a parameter.

MHz
megahertz

Midspan Meet
The capability to interface between two lightwave terminals of different vendors. This applies to high speed optical interfaces.

MJ
Major (alarm)

mm
Micrometer

MN
Minor (alarm)

Mode
A discrete optical wave that can propagate through a fiber.

MTBF
Mean Time Between Failures

MTBMA
Mean Time Between Maintenance Activities

Multimode Fiber (MMF)
A fiber with a core (the glass center of the fiber which light travels through) larger than Single Mode Fiber so that more than one wave can pass through it. It is primarily deployed for short distances.

Multiplexing
The process of combining several distinct digital signals into a single composite digital signal.

MZ
Mach-Zender

N

NA
Not Alarmed

NE
Network Element

NE ACTY
Near-End Activity

NEBS
Network Equipment-Building System

Network Element (NE)
A node in a telecommunication network that supports network transport services and is directly manageable by a management system.

Network Monitoring and Analysis (NMA)
An operations system designed by Telcordia which is used to monitor network facilities.

Network Service Access Point Address (NSAP Address)
An automatically assigned number that uniquely identifies a Network Element for the purposes of routing DCC messages.

NG-OLS
Next Generation Optical Line System

nm
Nanometer (10-***9*** meters)

NMA
Network Monitoring and Analysis System

NMON
Not Monitored

Node
An End System and/or Intermediate System in a DCN. Examples of Lucent Nodes are OLS 400G and SNMS.

Non-revertive switching
In non-revertive switching, a working and stand-by line exist on the network. When a protection switch occurs, the standby line is selected to support traffic, thereby becoming the working line. The original working line then becomes the stand-by line. This status remains in effect even when the fault clears. That is, there is no automatic switch back to the original status.

Not Monitored (NMON)
A memory administrative state for ports.

NR
Not Reported

NRZ
Non-return to zero

NSA
Nonservice Affecting

NSAP Address
Network Service Access Point Address

NZDSF
Non-Zero Dispersion Shifted Fiber

O

O&M
Operation and Maintenance

O&M
Operation and Maintenance

OA
Optical Amplifier

OALAN
Overhead Access Local Area Network

OAM&P
Operations, Administration, Maintenance, and Provisioning

OC, OC-n
Optical Carrier

OCAIM
optical channel alarm indication message

OCHAN
Optical Channel

ODU
Optical Demultiplexer

OLS
Optical Line System

OMON
Optical Monitoring Circuit

OMU
Optical Multiplexer Unit

OOF
Out-of-Frame

OOS
Out-of-Service

OOS-MA
out of service—manual

OOS-MA-AS
A provisioning state for slots and ports. It is not an acronym, an abbreviation, or a shortened form of anything. It is always written in capital letters.

Open Ring Network
Network formed of a point-to-point configuration of systems.

Open System Interconnection Data Communication Network (OSI DCN)
based on the OSI 7-Layer protocol for transfer of data between systems.

Open Systems Interconnection (OSI)
Referring to the OSI reference model, a logical structure for network operations standardized by the International Standards Organization (ISO).

Operations Interface
Any interface providing you with information on the system behavior or control. These include the equipment LEDs, interface strip, CIT, office alarms, and all telemetry interfaces.

Operations Interworking
The capability to access, operate, provision, and administer remote systems through craft interface access from any site in a SONET network or from a centralized operations system.

Operations System (OS)
A central computer-based system used to provide operations, administration, and maintenance functions.

OPR
Optical Power Received - Optics

OPROOS
Out-of-Service

OPT
Optical Power Transmitted - Optics

Optical Amplifier (OA)
The Optical Amplifier operates in the 1530 nm to 1563 nm band (191.850 THz - 195.900 THz range), and provides a uniform gain for up to 80 channels.

Optical Carrier (OC, OC-n)
The optical signal that results from an optical conversion of an STS signal; that is, OC-1 from STS-1 and OC-n from STS-n.

Optical Carrier 12/Synchronous Transport Module 4 (OC12/STM4)
The OC12/STM4 port unit provides a bidirectional port at the OC-12 rate.

Optical Carrier 192/Synchronous Transport Module 64 (OC192/STM64)
The OC192/STM64 port unit provides a bidirectional port which is provisionable at either the OC-192- or STM-64-rate.

Optical Carrier 48/Synchronous Transport Module 16 (OC48/STM16)
The OC48/STM16 port unit provides a bidirectional port which is provisionable at either the OC-48- or STM-16-rate.

Optical Channel (OCHAN)
An OC-N/STM-N wavelength within an optical line signal. Multiple channels, differing by 1.5***m*** in wavelength, are multiplexed into one signal.

Optical Demultiplexer (ODU)
An ODU takes the OLS optical signal and separates it into its component signals; up to eighty (80) discrete signals may be extracted.

Optical Line ID
A portion of the supervisory signal that identifies optical lines to prevent wrong connections between sites.

Optical Line Signal
A multiplexed optical signal containing eight wavelengths or channels.

Optical Line System (OLS)
A lightwave transmission system that can multiplex up 8, 16, 80 or more wavelengths, transmit the resulting multiplexed signal, and then demultiplex the signal at the other end.

Optical Line System (OLS) End Terminal
Terminal equipment consisting of a co-located Optical Multiplexer Unit (OMU) and Optical Demultiplexer Unit (ODU) for bidirectional transmission, Optical Amplifiers (OA), and OLS Telemetry packs.

Optical Line System (OLS) Repeater Terminal
Bidirectional terminal consisting of a pair of Optical Amplifiers (OA) and the corresponding OLS telemetry packs.

Optical Line System (OLS) Subnetwork
All dual-facing end terminals and OLS Repeaters interconnected with each other. The dual-facing shelf feature extends the access domain beyond the end terminals.

Optical Monitoring Circuit (OMON)
The OMON determines the number of channels (wavelengths) present in the WaveStar® OLS 1.6T system, and the output power of each channel present.

Optical Multiplexer Unit (OMU)
An OMU takes up to 80 Low Speed Broadband (LSBB), High Speed Broadband (HSBB), or ***OC-48***/STM-16 signals and combines them into a single signal.

Optical Section
Refer to ***Span***.

Optical Translator Unit (OTU)
OTUs translate incoming optical signals to wavelengths compatible with OLS.

Optical WAD
Refer to ***Wavelength Add/Drop***.

Orderwire
A section of the supervisory signal that is used for communication between sites.

Original Value Provisioning
The original values are preprogrammed at the factory. These values can be overridden using local or remote provisioning.

OS
Operations System

OSI
Open System Interface

OSI DCN
Open System Interconnection Data Communication Network

OSNR
Optical Signal to Noise Ratio

OSNR-C
Optical Signal to Noise Ratio - Channel

OSS
Operations Support System

OT
Optical Translator

OTCTL
Optical Translator Controller

OTPM
Optical Translator Port Module

OTU
Optical Translator Unit

Out-of-Service (OOS)
The circuit pack is not providing its normal service function (removed from either the working or protection state) either because of a system problem or because the pack has been removed from service.

Outage
A disruption of service that lasts for more than 1 second.

Overhead Access Local Area Network (OALAN)
The internal local area network that provides communications between the System Controller circuit pack and the Overhead Controller circuit pack.

OW
OrderWire

P

Parallel Telemetry
A set of alarms and status information reported to an operations center.

Parameter
A variable that is given a value for a specified application. A constant, variable, or expression that is used to pass values between components.

Parity Check
Tests whether the number of ones (or zeros) in an array of binary bits is odd or even; used to determine that the received signal is the same as the transmitted signal.

Path Overhead (POH)
Overhead assigned to and transported with the payload until the payload is demultiplexed. It is used for functions that are necessary to transport the payload.

PC
standard-type connector, 0.3 dB typical loss

PCM
Pulse Code Modulation

Performance Monitoring (PM)
Measures the quality of service and identifies any degrading or marginally operating systems (before an alarm would be generated).

PID
Private Identifier (Password)

PIN
A type of photodiode.

Platform
In OLS, a platform is a family of equipment and software configurations designed to support a particular application.

Plesiochronous
Refers to network elements involved in multiple digital synchronous circuits running at different clock rates.

PM
Performance Monitoring

POH
Path Overhead

Port
A system interface for transmission, as input, output, or bidirectional.

PRD
Product Requirements Document

Preprovisioning
The capability to provision a slot before installing a circuit pack.

Private Identifier (PID)
Password

Proactive Maintenance
Refers to the process of detecting degrading conditions not severe enough to initiate protection switching or alarming, but indicative of an impending signal fail or signal degrade defect.

Protection Switching
The switching of traffic from a malfunctioning line to one that is working.

PROTN
Protection

Provisioning
Assigning a value to a system parameter.

Pump Laser Efficiency (PLE)
The PLE provides an indication of the level of performance of pump lasers of the OA.

PWR
Power

Q

QOS
Quality of Service

R

RCV
Receive

RDI
Remote defect indicator

Reactive Maintenance
Refers to discovering defects/failures and then clearing them.

Regeneration
The process of reconstructing a digital signal to eliminate the effects of noise and distortion.

Remote defect indicator (RDI)
Previously called far-end-receive failure (FERF), an indication returned to a transmitting terminal that the receiving terminal has detected an incoming section failure.

Remote failure indication (RFI)
Previously called yellow signals, a signal that alerts upstream STS-1 path terminating equipment that a down stream failure has been alarmed along the STS-1 path. This action prevents multiple alarms from being activated for the same failure and ensures that craft will be dispatched to the correct location of the failure.

Repeater
A repeater is an optical device that receives an optical signal, amplifies it and re-transmits it.

Repeater Terminal
In OLS, a bidirectional terminal consisting of a pair of optical amplifiers and the corresponding telemetry packs.

RF
Radio Frequency

RFI
Remote failure indication

Ring
A series of nodes connected in a ″ring″ topology so that if there is a failure of a node or a link, traffic can be routed in the opposite direction of the failure and reach all nodes on the ring.

RM ACTY
Remote Activity

Router
An interface between two networks. While routers are like bridges, they work differently. Routers provide more functionality than bridges. For example, they can find the best route between any two networks, even if there are several different networks in between. Routers also provide network management capabilities such as load balancing, partitioning of the network, and trouble-shooting.

Routing Domain
A collection of End Systems and Intermediate Systems which operate according to the same routing procedures and which is operated by a single administrative authority.

RPP
Reliability Prediction Procedure

RT
Remote Terminal

RTAC
Regional Technical Assistance Center

Rx
receive

S

SA
Service Affecting

SBS
Stimulated Brillouin Scattering

SC U-LBO
SC Universal Line-Build-Out

SD
Signal Degrade

SDH
Synchronous Digital Hierarchy

SDL
Supervisory Data Link

Section Overhead (SOH)
Capacity added to either an AU-4 or assembly of AU-3s to create an STM-1. Contains always STM-1 framing and optionally maintenance and operational functions. SOH can be subdivided in MSOH (multiplex section overhead) and RSOH (regenerator section overhead).

SEFS
Severely Errored Frame Seconds

SEL
NSAP Selector is used to differentiate multiple access points (NSAPs) for the same network element whose network name is the Network Entity Title.

SES
Severely Errored Seconds

SESP
P-bit Severely Errored Seconds

Severely Errored Frame Seconds (SEFS)
A performance-monitoring parameter.

Severely Errored Seconds (SES)
This performance monitoring parameter is a second in which a signal failure occurs, or more than a preset amount of coding violations (dependent on the type of signal) occur.

Severely Errored Seconds - P-bit (SESP)
A performance-monitoring parameter.

SF
Signal Fail

SID
System Identifier

Signal to Noise ratio (SNR)
The relative strength of signal compared to noise.

Single Mode Fiber (SMF)
A fiber that has a core (the glass center of the fiber which light travels through) which is small enough so that only one wave can pass through it. This is the only fiber used for long distance optical communication.

Single-ended Operations
The single-ended operations capability provides operations support from a single location to remote network elements (NEs) in the same SONET subnetwork. With this capability you can perform operations, administration, maintenance, and provisioning on a centralized basis. The remote NEs can be those that are specified for the current release.

Site Address
The unique address for each regenerator or terminal in a repeater span.

SNMS
Subnetwork Management System.

SNR
Signal to Noise ratio

SNR-C
Signal-to-Noise Ratio-Optical Channel

SONET
Synchronous Optical Network

Span
An uninterrupted bidirectional fiber section between two network elements. Spans can be measured in distance (Kilometers) or in the amount of loss that exists in the span (dB).

Span Growth
A type of growth in which one wavelength is added to all lines before the next wavelength is added.

Span Loss
Loss (in dB) of optical power due to the span transmission medium (includes fiber loss and splice losses).

SPE
Synchronous Payload Envelope

SPM
Self Phase Modulation

SPR-C
Signal Power Received - Optical Channel

SPR-P
Signal power - Pilot Channel

SPR-SU
Signal Power Received - Supervisory

SPT-C
Signal Power Transmitted - Optical Channel

SPT-SU
Signal power Transmitted - Supervisory

SSMF
Standard Single Mode Fiber

ST
standard-type connector, 0.3dB typical loss

STM-n
Synchronous Transport Module level n

STS, STS-n
Synchronous Transport Signal

STS-1E
Now referred to as EC-1. A signal typically carried by coaxial cables from one equipment location to another. The term EC-1 refers to the organization and data rate of the signal and also to the voltage template the signal must conform to and the impedances for which the voltage

template is valid.

STS1E Interface Circuit Pack
The STS1E Interface circuit pack interfaces with up to three bidirectional STS-1 signals.

Subnetwork
A collection of nodes connected by a single transmission medium.

Subnetwork Management System (SNMS)
An element management system that supports various WaveStar® OLS 1.6T Network Elements.

Supervisory Signal
An optical signal originating with the telemetry circuit pack that is used to communicate maintenance information.

Suppression
A process where service-affecting alarms that have been identified as an ″effect″ are not displayed to a user.

SUPVY
Supervisory

Synchronous
Network elements that are timed from references traceable to a single Stratum-1 source.

Synchronous Digital Hierarchy (SDH)
A family of digital transmission rates from 51.84 Mb/s to 9.953 Gb/s that allows the interconnection of transmission products around the world.

Synchronous Network
The synchronization of transmission systems with payloads to a master (network clock that can be traced to a single reference clock).

Synchronous Optical Network (SONET)
A family of fiber optic transmission rates from 51.84 Mb/s to 13.22 Gb/s that allows the interworking of transmission products from multiple vendors.

Synchronous Payload Envelope (SPE)
A 125-microsecond frame structure composed of STS path overhead and bandwidth for the payload.

Synchronous Transfer Mode (STM)
Transport and switching method that depends on information occurring in regular and fixed patterns.

Synchronous Transport Signal (STS, STS-n)
The basic logical building block signal with a rate of 51.840 Mb/s for an STS-1 signal and a rate of n times 51.840 Mb/s for an STS-n signal.

SYSCTL
System Controller

SYSMEM
System Memory

System Controller (SYSCTL)
System Controllers are the central processing unit of a system.

System Identifier (SID)
Part of NSAP used for intra-Area routing to the destination Node in the destination Area when the Area address part is the address for that Area.

System Memory (SYSMEM)
SYSMEM is where the system software is stored.

T

T1X1 and T1M1
The ANSI committees responsible for telecommunications standards.

TA
Technical Advisory

TABS
Telemetry Asynchronous Byte Serial (Protocol)

TAP
Trouble Analysis Procedure

Target Identifier (TID)
A provisionable parameter used to identify an FT-2000 ***OC-48/STM-16*** Lightwave network element. Typically, the TID is the common language location identifier (CLLI™) of the FT-2000 1x1 End Terminal, FT-2000 Add/Drop-Rings Terminal, and FT-2000 Repeater Bays.

TCA
Threshold-Crossing Alert

TCP/IP
Transmission Control Protocol/Internet Protocol

TDM
time division multiplexing

Threshold-Crossing Alert (TCA)
A condition set when a counter exceeds a user-selected high or low threshold. A TCA does not generate an alarm but is available on demand through the CIT.

THz
Terrahertz (10^{12} Hz)

TID
Target Identifier

Time Division Multiplexing (TDM)
The process of combining a number of lower speed lines into a higher speed line by allocating a short piece of time to each signal.

TL1
Transaction Language 1

TOD
Time of Day

TOP
Task Oriented Procedure

TOPR-OL
Total Power Received - Optical Line

TOPT-OL
Total Power Transmitted - Optical Line

Transaction Language 1 (TL1)
A machine-to-machine communications language that is a subset of CCITT's human-machine language.

Transmission Control Protocol/Internet Protocol (TCP/IP)
A networking protocol that provides communication across interconnected networks between computers with diverse hardware architectures and various operating systems.

Transport Service Bridge (TSB)
Used internally by an NE to provide direct connectivity with the SNMS via the TCP/IP network to exchange network operation and management information. OLS 400G supports an internal RFC 100g TSB function between OS(s) and NEs for customers that wish to use a TCP/IP network for transporting OSI application messages.

TrueWave® Fiber
Non–zero dispersion-shifted fiber manufactured by Lucent Technologies (previously referred to as DEB fiber).

TSB
Transport Service Bridge

TTL
transistor logic

Tx
Transmit

U **UAS**
Unavailable Seconds

UBob
universal build out block

Unavailable Seconds (UAS)
In performance monitoring, the count of seconds in which a signal is declared failed or in which 10 consecutively severely errored seconds (SES) occurred, until the time when 10 consecutive non-SES occur.

Upgrade
An upgrade is the addition of new capabilities (features). This requires new software and may require new hardware.

V **Value**
A number, text string, or other menu selection associated with a parameter.

VOA
Variable Optical Attenuator

W **WAD**
Wavelength Add/Drop

Wave Division Multiplexing (WDM)
WDM merges optical traffic onto one common fiber. It allows high flexibility in expanding bandwidth. It reduces costly mux/demux function, and reuses existing optical signals.

Wavelength

A wavelength is the length of a single wave (measured from crest to crest or trough to trough, for example) or the distance a wave travels in the time it takes to complete one cycle. Wavelengths are usually expressed in micrometers (mm) or nanometers (nm). Wavelength is often abbreviated by the Greek symbol lamda (l).

Wavelength Add/Drop (WAD)

The process of adding and dropping wavelengths to provide more efficient transmission. For example, a central office contains two or more OLS end terminals, some wavelengths can be added and dropped locally while others go express between the end terminals by means of OTs.

Wavelength Blocking

At a WA/D site with branching, if a wavelength goes express between two co-located OLS end terminals, that wavelength can only be added or dropped at the third co-located end terminal. Wavelength interchange permits the wavelength on the third end terminal to be converted into an available wavelength at the other two end terminals.

Wavelength Growth

A type of growth in which all eight wavelengths are added to a single line before more lines are added.

Waves

A wave is an oscillation or movement that transfers energy from point to point. Mathematically, it is described in terms of its frequency, amplitude, and velocity; and it can be visualized as a moving swell or succession of curves.

WaveWrapper

The Lucent proprietary format of transporting optical channels. The WaveWrapper format raises the bit rate by factor of 15/14 and adds optical channel overhead and FEC check bytes.

Wideband Communications

Voice, data, and/or video communications at digital rates from DS0 to DS1 rates (64Kb/s to 1544Kb/s)

X

XPM

Cross Phase Modulation (same as CPM)

Z

ZDW

Zero dispersion wavelength

Zero Code Suppression

A technique used to reduce the number of consecutive zeros in a line-codes signal (B3ZS for DS3 signals).

Zero Dispersion Shifted Fiber (DSF)

DSF where the zero dispersion point is shifted from 1310nm to 1550 nm. It is best suited for applications involving single channel transmission at 1550 nm, providing the benefits of zero dispersion as well as taking advantage of the lower attentuation wavelength.

Index

Numerics

10BaseT ports, 1-3

10BaseT connections, 6-20

A

Access control, 1-2

ACT-USER command;Commands

ACT-USER, 2-19

Administration, security, 1-2

Alarm

definition of, 6-8

Alarm Clear Delay, 6-9

Alarm conditions

buttons that indicate, 2-5

Alarm Cut-Off (ACO)/Suppress button;Audible office alarms

button that indicate, 2-6

Alarm messages, Quality of Service, 5-42 5-42

Alarm reports

CIT;CIT, 2-13

Alarm, Cut-Off LED/Suppress LED, 2-7

Applications, 2-3

OS maintenance, 2-3

remote maintenance, 2-3

Authorization levels, security, 1-8

Auto-provisioning, 4-2

Auto-provisioning, port configuration, 4-3

Automatic baselining, 5-15

Automatic Fault Recovery, 6-18

B

B1 Coding Violation Counts, monitoring of, 5-7 5-9

B1 parity errors, 5-7

baseline optical parameters, 14-72

Baselining optical power levels, 5-13

Bay Controller, 6-18

Board Controller, 6-18

C

Channel ID, logins;Logins

channel ID, 1-14

Channel, state of, 1-14

Channels

maximum number of for EMS-NE logins, 1-20

Chapter Organization, 9-2

Circuit Pack (CP)

failure, status condition, 2-6

removed, status condition, 2-6

Circuit Packs (CPs)

Active LED, 2-10

CIT

applications;Applications, 3-2

pc connection, 3-2

pc requirements, 3-2

CIT report

autonomous condition; Autonomous condition report, 2-13

CLEI. See Common Language Equipment Identifier., 6-19

Commands

OPR/RLS-EXT-CONT, 2-14

TEST-ALM, 2-14

TEST-LED;TEST-LED command, 2-13

Common Language Equipment Identifier (CLEI), 6-19

Controllers, 6-18

Counter thresholds, 5-37

D Date and time of day clock;Clock

date and time, 2-23

DCM-In, 13-181 13-184

Deferred Maintenance Alarm (DMA), 2-7

Digital parameters, moitoring of, 5-7 5-9

DLP-529

Baseline Optical Parameters, 14-72

DMA. See Deferred Maintenance Alarm (DMA)., 2-7

E Elements

User interface; Interfaces, 2-2

ENT-SYS command;Commands

ENT-SYS, 2-19

Equipment failures, 6-10

Errored seconds, monitoring of, 5-7 5-9

Event

intruder alert, 1-19

Event notifications

EMS-NE, 1-21

F Faulty equipment, identification of, 6-2

G Gateways, 2-3

Gauge-thresholds, 5-36

general laser information, xxvii

H History Log

information logged for CIT-NE;Logins, 1-27

logins;Logins, 1-27

I

IEC Class 1 Hazard Level 1M requirements, compliance with, 8-5

Inactivity timeout

CIT-NE, value, 1-23

Inactivity Timer

CIT-NE, 1-23

Interface application (message) protocol, 2-18

Interfaces

communications protocol, 2-18

external, 2-4

TCP/IP communication protocol, 2-18

Intruder alert alarm, 1-19

Intrusion alert

user-id, 1-19

J J0 Section Trace Identifier, 6-2

L laser and eye damage, xxvii

Laser bias current, 5-31

Laser bias current, monitoring of, 5-7 5-8 5-9

laser classifications, xxvii

Laser safety hazard levels, 8-5

LED

ABN/Abnormal, 2-7

ACO (Suppress), 2-7

ACTIVE, 2-10

CR/Prompt, 2-6

Fault, 2-10

MJ/Deferred, 2-7

MN (minor alarms), 2-7

NE-ACTY, 2-8 2-8

LED tests, 2-13

Lightwave safety, xxvii

general laser information, xxvii

laser and eye damage, xxvii

laser classifications, xxvii

safety precautions, xxvii

Log retrieval report;CIT report

login retrieval, 2-13

Login Active state, of channels, 1-14

Logins

active state, of channels, 1-14

aging, 1-4

aging, CIT-NE, 1-25 1-25

changing original super user, 1-6

creating original super user, 1-6

deleteing, CIT-NE, 1-25

deleting original super user, 1-6

denied session, 1-16

disabled condition, CIT-NE, 1-22

disabling, 1-5

EMS-NE database change; Database change, 1-21

EMS-NE super user privileges;Super user, 1-20

enabling, 1-5

inactive state, of channels, 1-14

inhibited condition, CIT-NE, 1-22

number of, EMS TL1-NE, 1-28

original super user, 1-6

simultaneous, 1-4

temporary, 1-4

Logout

user-id message, 1-16

user-id-forced disconnect message, 1-16

user-id-remote link down message, 1-16

user-id-timeout message, 1-23

Loss of Signal, 6-16

M

Maintenance, 5-1

of CIT;CIT maintenance, 2-13

Maintenance signals, 6-2

Maintenance, of WaveStar OLS 400G, 6-1

Management

performance, 5-1

Manual baselining, 5-16

Miscellaneous discrete control output points., 2-16

Miscellaneous discrete environmental input points, 2-16

Miscellaneous discrete environmental points

alarm levels of, 2-16

MJ/Deferred LED, 2-7

Monitoring signals, 6-12

N

NE-to-NE communications, 2-18

Network Element (NE)

self tests, 2-13

Network Element Type (NETYPE) provisioning, 4-6

Non-Super User logins;Logins

non-super user, 1-4

Non-volatile memory

security data storage, 1-26

NVM. See Non-volatile memory., 1-26

O

OCHAN (SPR-C), 13-188

OCHAN (SPT-C), 13-193

Office alarm tests, 2-14

OLINE (PLE-RPx) {x=1-6}, 13-195

OLINE (PLE-TPx) {x=1-6}, 13-198

OLINE (TOPR-OL), 13-183

OLINE (TOPT-OL), 13-186

On-demand retrieval operations report;CIT report

on-demand retrieval operations, 2-13

Operation & Maintenance TOP, 9-1

OPR/RLS-EXT-CONT command, 2-14

Optical power levels, baselining, 5-13

Optical power received, 5-30

Optical power received, monitoring of, 5-7 5-8 5-9

Optical power transmitted, 5-30

Optical power transmitted, monitoring of, 5-7 5-8 5-9

Optical/analog parameters, monitoring of, 5-7

OS-NE TL/1 Interface;Interfaces

OS-NE TL/1, 2-18

OTPS provisioning, 4-6

OTU ESS, SESS, or SEFESS, 13-252 13-256

OTU HSBB (LBC), 13-220

OTU HSBB (OPR), 13-214 13-240 13-244 13-250

OTU HSBB (OPT), 13-218

OTU OC-192/STM-64 (LBC), 13-212

OTU OC-192/STM-64 (OPR), 13-207

OTU OC-192/STM-64 (OPT), 13-210

OTU OC-48/STM-16 (LBC), 13-206

OTU OC-48/STM-16 (OPR), 13-201

OTU OC-48/STM-16 (OPT), 13-204

OTU, 'DSA Registration Error', 13-263

OTU, 'MUX OTU LMI', 13-264

OTU, 'Outdated Boot Flash', 13-259

Overhead Controller, 6-18

P

Parameters

user ID lockout, 1-18

Password, 1-2

administration of NE, 1-7

aging contraints, CIT-NE, 1-24

aging interval, CIT-NE, 1-24

aging of NE, 1-7

aging, CIT-NE, 1-24

definition, 1-7

expired state, of channels, 1-14 1-15

NE, 1-7

Password, security, 1-2

Per channel performance, monitoring of, 5-11

Performance parameter thresholds, 5-36

Performance parameters, 5-18

PID. See Program Identification., 6-19

PING command, 6-20

PM report, 5-33 5-33

Point of Attachment

OS;Operating system, 2-18

Port auto-provisioning, 4-3

Ports

security of, 1-5

Pre-equalization, 14-61

Proactive maintenance, 5-1

Product support, xli

Provisioning

auto, 4-3

of CIT;CIT provisioning, 2-13

OTPS, 4-6

technical, 4-2 4-5

Pump lasers, 5-4

Q

QOS. See Quality of Service, 5-42

Quality of service alarm messages, 5-42

R

Reachable Networks, 2-2

Regenerator section, 5-32

Report

alarm, 2-13

autonomous condition, 2-13

log retrieval, 2-13

on-demand retrieval, 2-13

Reports

CIT;CIT report, 2-13

RESTART switch

restarts system software; System software, 2-6

S

Safety instructions, xxiii, xxvii

safety precautions (enclosed systems), xxvii

safety precautions (unenclosed systems), xxvii

SDH alarms

types of, 2-6

Security

access control, 1-2

audit trail, 1-2

authorization levels, 1-8

command functional categories, 1-8

NE interfaces, 1-3
of ports, 1-5
password, 1-2
recorded transaction on the NE History Log; Network Element (NE) History Log, 1-2
user ID, 1-2
Security administration privileges, 1-4
Severely errored framed seconds, monitoring of, 5-7 5-9
Signals, monitoring, 6-12
SONET alarms
types of, 2-6
SPR-C, 5-33
SPR-SU, 5-28
SPT-C, 5-33
SPT-SU, 5-28
Status condition
CP failure, 2-6
CP removed, 2-6
Super User logins;Logins
super user, 1-4
Super User, functions, 1-13
Supervisory signal, 6-2 6-4
Supervisory Signal (SUPVY), 2-22
operation of, 2-21
SUPVY (SPR-SU), 13-222
SUPVY (SPT-SU), 13-225
SUPVY. See Supervisory Signal (SUPVY)., 2-21
System Controller, 6-18
System provisioning, 4-2

T

Target Power, 14-63
TCA Optics, 13-183
Technical provisioning, 4-2 4-5
TEST-ALM command;Commands
TEST-ALM, 2-14
TEST-AUTO-LOCAL command;Commands
TEST-AUTO-LOCAL, 2-13
Testing
CIT;CIT testing, 2-13
Thresholds
counter, 5-37
gauge, 5-36
non-provisionable, 5-44
parameter, provisionable, 5-38
Thresholds, performance parameter, 5-36
TID/NSAP mapper, support of, 2-18
TOPR-OL, 5-25
TOPT-OL, 5-25
Training, xxvii

U

User ID, 1-5
User ID lockout threshold;Threshold
user ID lockout, 1-18
User ID, security, 1-2
User pane
control, 2-4
display, 2-4

V

Version recognition, 6-19
Program Identification, 6-19

W

WaveStar OLS 400G
maintenance, 6-1
version recognition, 6-19
WaveStar OLS 400G System
controllers, 6-18