REFERENCE

2702D, 2702DM, 2713B, AND 2713BM TELEPHONE SETS

IDENTIFICATION, INSTALLATION, MAINTENANCE, AND CONNECTIONS

1. GENERAL

1.01 This section contains information for the 2702D (MD), 2702DM (MD), 2713B (MD), and 2713BM telephone sets.

1.02 The reasons for reissuing this section are listed below. Revision arrows are used to emphasize the more significant changes.

- Show the 281A adapter MD
- Show the D-180819 Kit of Parts MD (intended for PhoneCenter distribution only)
- Add the 338A adapter
- Add the D-181059 Kit of Parts (intended for PhoneCenter distribution only)
- Add the D-181063 Kit of Parts polarity guard
- Add the D-180896 Kit of Parts polarity guard.

2. DESCRIPTION

2.01 The 2702D (MD) or 2702DM (MD) telephone set (Fig. 1 or 2) is equipped with a message waiting lamp and is intended for PBX use.

2.02 The 2713B (MD) or 2713BM telephone set (Fig. 3) is equipped with a combination 2-line pickup ▶key which when depressed can be used as a signal key. [Signal feature does not come factory wired for use (Fig. 15 and 16).] The white switchhook plunger when lifted will mechanically hold either line at that telephone.◀.

Note: ▶The hold feature is operational as long as the switchhook plunger is lifted. If handset is returned to handset cradle, the hold feature will be broken and party disconnected. The hold feature can not be released from any telephone set except the one on which it was initiated.◀

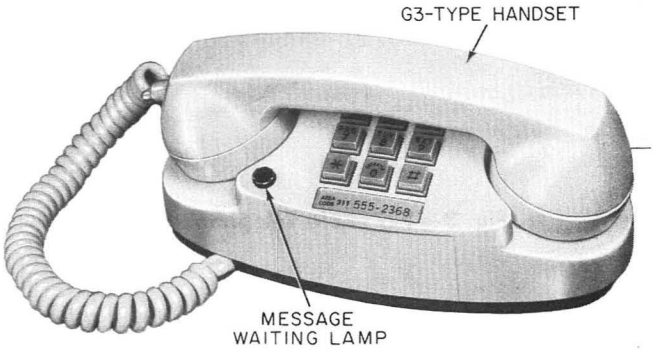

Fig. 1—▶2702D (MD) Telephone Set◀

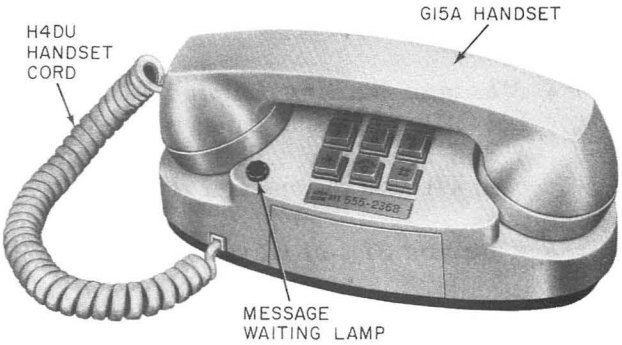

Fig. 2—▶2702DM (MD) Telephone Set◀

Ordering Guide

2.03 ***Basic Telephone Sets:***

Set, Telephone, 2713BM-* (modular)

*Add appropriate color suffix.

NOTICE
Not for use or disclosure outside the
Bell System except under written agreement

TCI Library | www.telephonecollectors.info

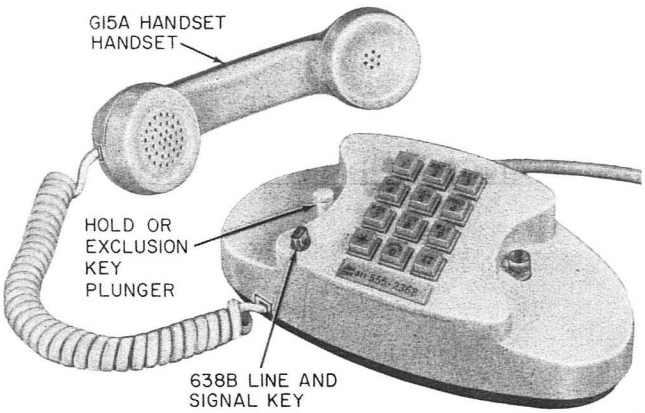

Fig. 3—▶2713BM Telephone Set◀

2.04 These telephone sets are available in all standard colors.

2.05 For replaceable component information, refer to Table B, or for housing and plunger assembly information, refer to Table C.

2.06 ***Operating Features:***

- ***Message Waiting Lamp:*** 2702D (MD) or DM (MD) set—visual signal, under control of a PBX attendant, indicates a message has been left with the operator (Fig. 1 or 2).
- ***Line and Signal Key:*** 2713B (MD) or BM set—permits line selection by turning, signaling by depressing (Fig. 3 and 6).
- ***Hold Key Plunger:*** 2713B (MD) or BM set—provides for mechanical hold on either or both nonselected CO line (Fig. 3).
- ***Night Light Switch:*** allows dial lamp to be operated at reduced intensity (dial lamp illuminates dial at full intensity with handset off-hook) (Fig. 4).
- ***Ringer Volume Control:*** provides manual control of ringer volume on 2702D (MD) or DM (MD) sets (Fig. 5).

3. INSTALLATION

3.01 ▶Install telephone sets using standard installation procedures. Some of the standard wiring arrangements used when installing these sets are shown in Fig. 14 through 23.◀

Danger: Securely attach 2A or similar retaining clamp to ac outlet using outlet cover screw before attempting to install 2012-type transformer. The transformer and any other cord plugged into the ac outlet should always be unplugged completely from outlet before attempting to attach or remove the clamp. Do not use 2A or similar retaining clamp on outlets where center mounting screw holds the duplex outlet in the box.

TABLE A
TELEPHONE SET FEATURES

TELEPHONE SET	DIAL/ NIGHT LAMP	MESSAGE WAITING LAMP	RINGER VOLUME/OFF-CONTROL	CO AND 1A KEY TELEPHONE SYSTEM LINES		SIGNALING
				INDIVIDUAL OR 2-PARTY FLAT RATE SERVICE	2-LINE PICKUP WITH HOLD (CO LINES ONLY)	
2702D(MD), DM(MD)	•	•	•	•		
2713B(MD), BM	•		*	•	•	†

* Not equipped with internal ringer.
†Optional features:

(1) 2713B(MD): Change mounting cord to provide signal leads.
(2) 2713BM: Due to insufficient mounting cord leads use the dial light transformer leads or leads from the 2nd line.

TCI Library | www.telephonecollectors.info

◆TABLE B◆

ORDERING GUIDE

REPLACEABLE COMPONENTS	TELEPHONE SET			
	2702D (MD)	2702DM (MD)	2713B (MD)	2713BM
Cord, Handset	H4CJ-*	H4DU-*	H4CJ-*	H4DU-*
Cord, Mtg.	D4BT-29	D4BU-29	D6AF-87(MD) D6AP-87	D6AP
Dial	35AD4A	35AD4A	35AD4A	35AD4A
Housing and Plunger Assembly	Table C	Table C	Table C	Table C
Key, Line	—	—	638F	638F
Lamp, Dial†	KS-19387L1	KS-19387L1	KS-19387L1	KS-19387L1
Socket, Dial Lamp†	KS-19240L2	KS-19240L2	KS-19240L2	KS-19240L2
Lamp, Message Waiting	KS-16893L1	KS-16893L1	—	—
Transformer (Dial Lamp)	2021A or C	2021A or C	2021A or C	2021A or C
Retainer, Number Card	812558039 (P-25E803)	812558039 (P-25E803)	812558039 (P-25E803)	812558039 (P-25E803)
Ringer	M1A	M1A	External E1-Type (If Required)	External E1-Type (If Required)
Set Hand	G3A-*	G15A-*	G3A-*	G15A-*
Polarity Guard Kit of Parts‡	D-180229 D-180896 D-181063	D-180229 D-180896 D-181063	D-180229 D-180896 D-181063	D-180229 D-180896 D-181063

* Add appropriate color suffix.

† Available as D-179919 Kit of Parts (containing KS-19387L1 lamp, KS-19240L2 socket, and installation instructions).

‡ Optional and consist of the following:

(a) D-180229 Kit of Parts:
- 819040544 (P-90D054) Guard Assembly MD
- 812166759 (P-21F675) Terminal Board Assembly MD
- 812651644 (P-26E164) Retainer MD
- 814313920 (P-43A392) Screw MD

(b) D-180896 Kit of Parts:
- 840364251 Instruction Sheet
- 840364202 Polarity Guard

(c) D-181063 Kit of Parts:
- 840364426 Polarity Guard
- 840364434 Mounting Screw

TCI Library | www.telephonecollectors.info

TABLE C

HOUSING AND PLUNGER ASSEMBLY

COLOR	TELEPHONE SET			
	2702D	2713B	2702DM	2713BM
Black	818580037 (P-85H003)	818449035 (P-84D903)	840705016	840701759
Ivory	818580508 (P-85H050)	818449506 (P-84D950)	840705024	840701767
Green	818580516 (P-85H051)	818449514 (P-84D951)	840705032	840701775
Red	818580532 (P-85H053)	818449530 (P-84D953)	840705040	840701783
Yellow	818580565 (P-85H056)	818449563 (P-84D956)	840705057	840701791
White	818580581 (P-85H058)	818449589 (P-84D958)	840705065	840701809
Rose Pink	818580599 (P-85H059)	818449597 (P-84D959)	840705073	840701817
Lt. Beige	818580607 (P-85H060)	818449605 (P-84D960)	840705081	840701825
Aqua Blue	818580623 (P-85H062)	818449621 (P-84D962)	840705099	840701833

Caution: Do not connect more than one transformer to the same inside wiring pair.

3.02 Select a 105-120 volt ac receptacle on a circuit not controlled by a switch for dial lamp transformer. A 2A clamp is available to secure the 2012A transformer to the service outlet. Current model transformers utilize folded blade prongs to secure the transformer to the service outlet. For multipled dial lamp sets, see section covering station transformers for selection information.

For proper illumination of the dial, the wire run between transformer and telephone set should not exceed 250 feet of standard inside wire. Do not use a 25-foot mounting cord because the added resistance may result in decreased illumination.

3.03 ***The 281A (MD) and 338A Adapters:*** The 281A (MD) and 338A tee adapters are used to connect transformer power to the PRINCESS® telephone sets in some modular installations. The 281A (MD) adapter plugs into the telephone and requires two mounting cords to the set Fig. 22). The 338A adapter plugs into the 625 and 630 connecting block or E1CM ringer (Fig. 23) and required only one mounting cord to the telephone set.

3.04 ***External Ringer:*** Install an E1-type ringer, when required, for 2713B or BM telephone sets.

3.05 ***Polarity Guard (optional):*** Install the D-180229, ➧D-180896, or D-181063 Kit of Parts polarity guard only when authorized by local instructions to eliminate the affects of battery and ground reversals encountered in end-to-end signaling. Installation is as follows.➧

(a) ***D-180229 Kit of Parts.***

TCI Library | www.telephonecollectors.info

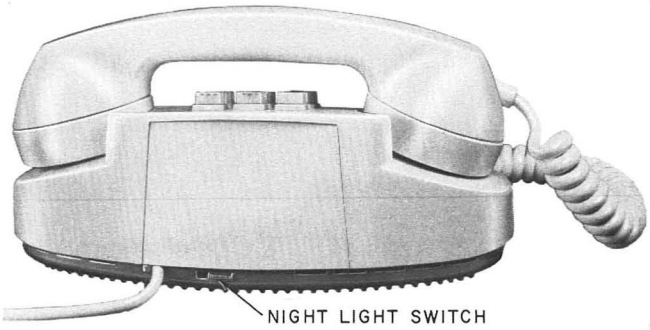

Fig. 4—▶2700-Type Telephone Set, Rear—Night Light Switch Location◀

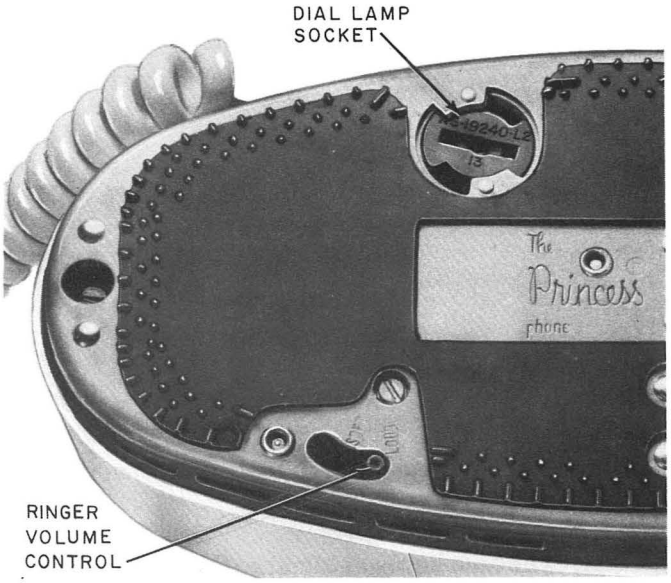

Fig. 5—▶2702D (MD) or DM (MD) Telephone Set, Partial Bottom View◀

(1) Remove housing; loosen dial mounting screws and move the dial to one side without disconnecting the dial leads.

(2) Insert the 812651644 (P-26E164) retainer in left-hand dial mounting bracket (Fig. 7).

(3) Insert tabs of 812166759 (P-21F675) (Fig. 9) terminal board into notches in right-hand dial mounting bracket and secure to retainer using 814313920 (P-43A392) screw.

(4) Connect polarity guard in accordance with connections shown in Table D.

(5) Reinstall dial on mounting bracket, securing the guard assembly mounting bracket under the right-hand dial mounting screw (Fig. 8).

(6) Reinstall housing.

(b) ***▶D-180896 Kit of Parts (For Sets With 4228-Type Networks).***

(1) Remove housing; loosen dial mounting screws and move the dial to one side without disconnecting the dial leads.

(2) Connect polarity guard in accordance with connections shown in Table D.

(3) Position the polarity guard inside the set as shown in Fig. 10.

(4) Reinstall dial on mounting bracket. Depress line switch to determine that polarity guard placement does not interfer with line switch operation.

(5) Reinstall housing.◀

(c) ***▶D-181063 Kit of Parts (For Sets With 4010-Type Networks) (Fig. 11).***

(1) Remove housing from telephone set base.

(2) Remove ringer mounting screw (Fig. 12).

(3) Remove dial from dial mounting bracket.

(4) Connect polarity guard in accordance with connections shown in Table D.

(5) Using screws provided in kit of parts secure polarity guard (Fig. 12 and 13) using ringer mounting hole vacated in Step (2).

(6) Dress leads as shown in Fig. 13.

(7) Replace dial.

(8) Replace housing.◀

3.06 ***Operating Instructions [2713B (MD) or BM]:*** If a call is received on one line and it is

TCI Library | www.telephonecollectors.info

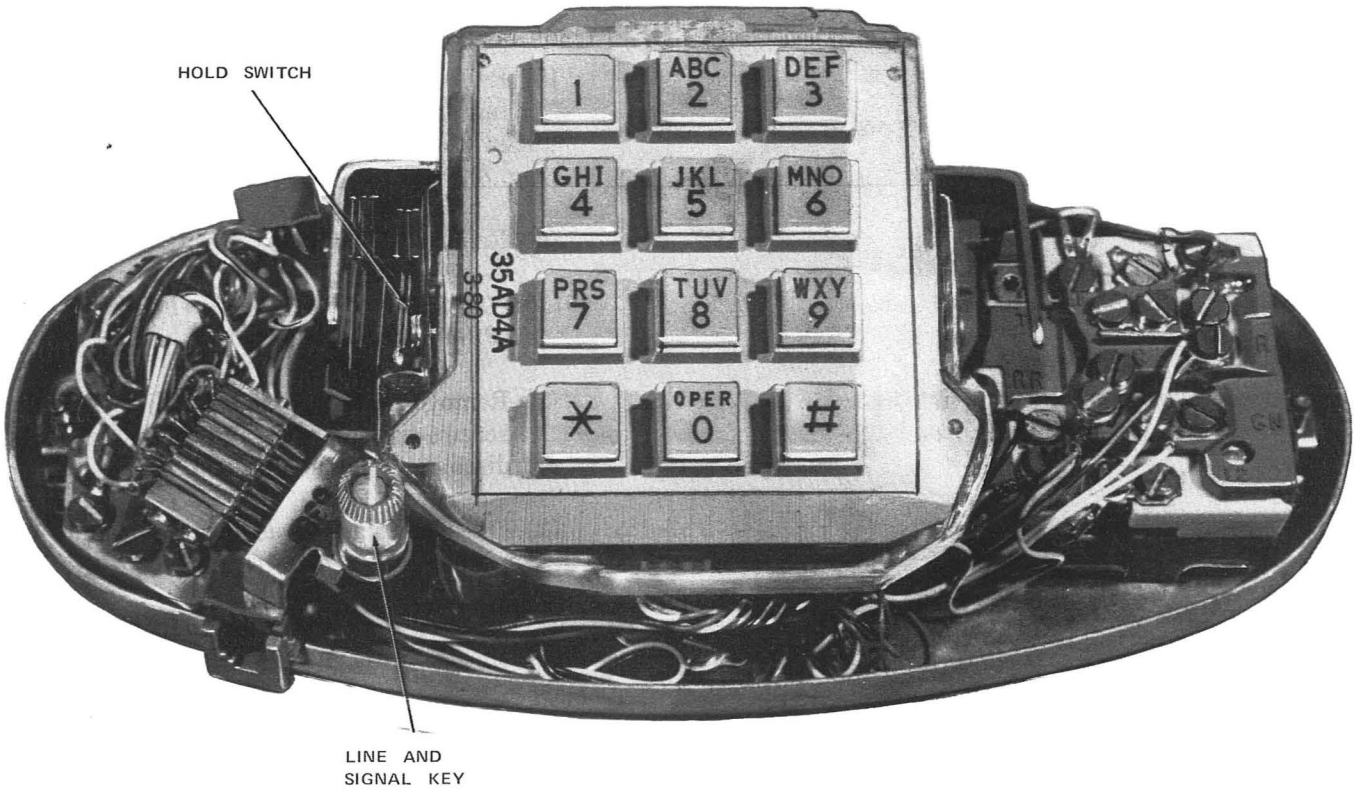

Fig. 6—▶2713BM Telephone Set, Housing Removed◀

desired to hold a party on a line while ▶answering or speaking on◀ the other line.

(1) Lift the hold key (left line switch plunger) and turn the line key to pick up the second line.

(2) When the call on the second line is completed, turn the line key back to the first line position and then depress the hold key.

Note: Failure to depress the hold key will automatically place a hold on the unused line preventing its being used for either incoming or outgoing calls. Reversal of this procedure (i.e. depressing the hold key before switching the line key back to the first line position) will disconnect the first line.

(3) If the second line is to be picked up by an extension station, the hold key is left operated (lifted) until the extension is answered. After the extension handset is lifted, the hold key (first set) must be depressed to permit conversation path for the extension.

(4) The hold key is automatically returned to normal when the handset is replaced.

3.07 Jacks and plugs are available for portable installations of these telephone sets. Refer to appropriate section in Division 461 for selection.

3.08 A 124A apparatus blank is available to insert into the rear notch when not filled with modular jack.

4. MAINTENANCE

4.01 Maintenance of the 2700-type telephone sets is limited to replacing defective components.

Warning: Do not use scouring cleaners or volatile solvents as these may damage finish.

TCI Library | www.telephonecollectors.info

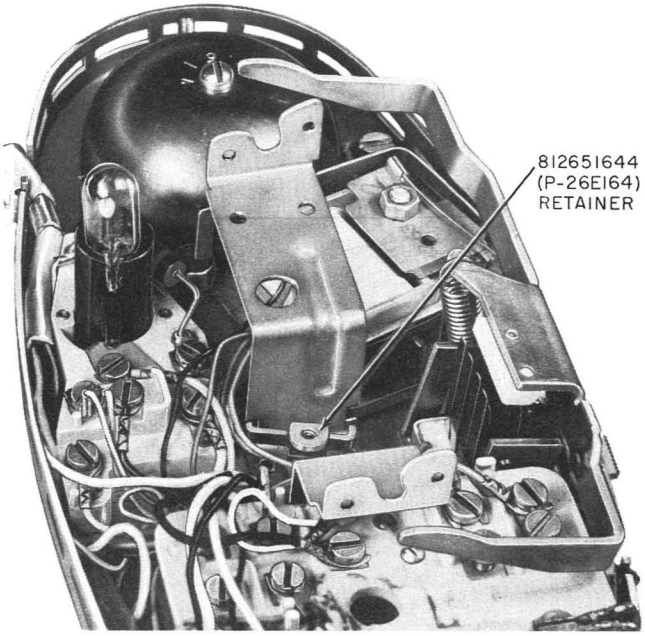

Fig. 7—Installing The 812651644 (P-26E164) Terminal Board Retainer in PRINCESS Telephone Set

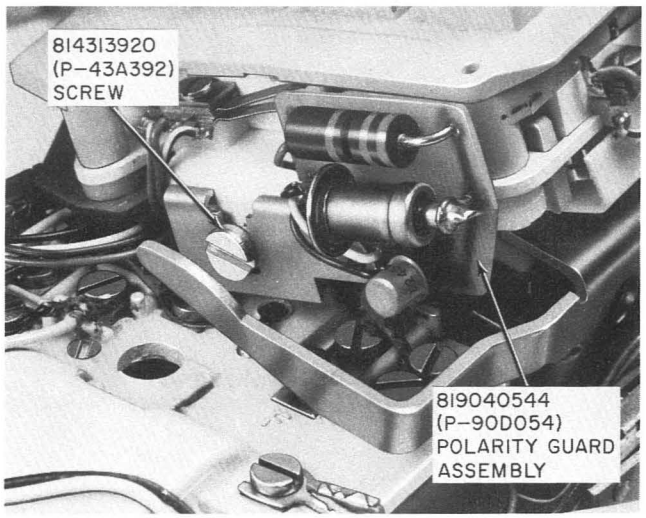

Fig. 8—Polarity Guard Mounted in PRINCESS Telephone Set

4.02 Housings, handsets, and cords may be cleaned with a damp KS-2423 (or equivalent) cloth.

4.03 Refer to sections covering dials, handsets, cords, ringers, etc., for maintenance of these components.

4.04 Those housings manufactured from 1970 through 1974 must be modified due to a clearance problem, if they are used with a base containing a 4228G network. Modify as follows.

(1) Using diagonal side cutters, clip off a portion of the ***plunger-well snap-tabs,*** which interfere with the P-type ringer and/or network, as shown in Fig. 14.

Note: Tabs should be cut at an angle leaving 1/16-inch at the plunger well. Tabs longer than 1/16-inch will cause the plunger to bind when housing is installed. Tabs less than 1/16-inch will permit plunger to fall through.

4.05 Housings manufactured prior to 1970 have no tabs. Housings manufactured after 1974, identified by an embossed "N" or "NP" inside the housing, do not require modification for the 4228-type network.

5. CONNECTIONS

Without a polarity guard **TOUCH-TONE® dialing will operate only with the orange-black dial lead connected to the negative (ring) side of the line and the green dial lead connected to the positive (tip) side.**

TCI Library | www.telephonecollectors.info

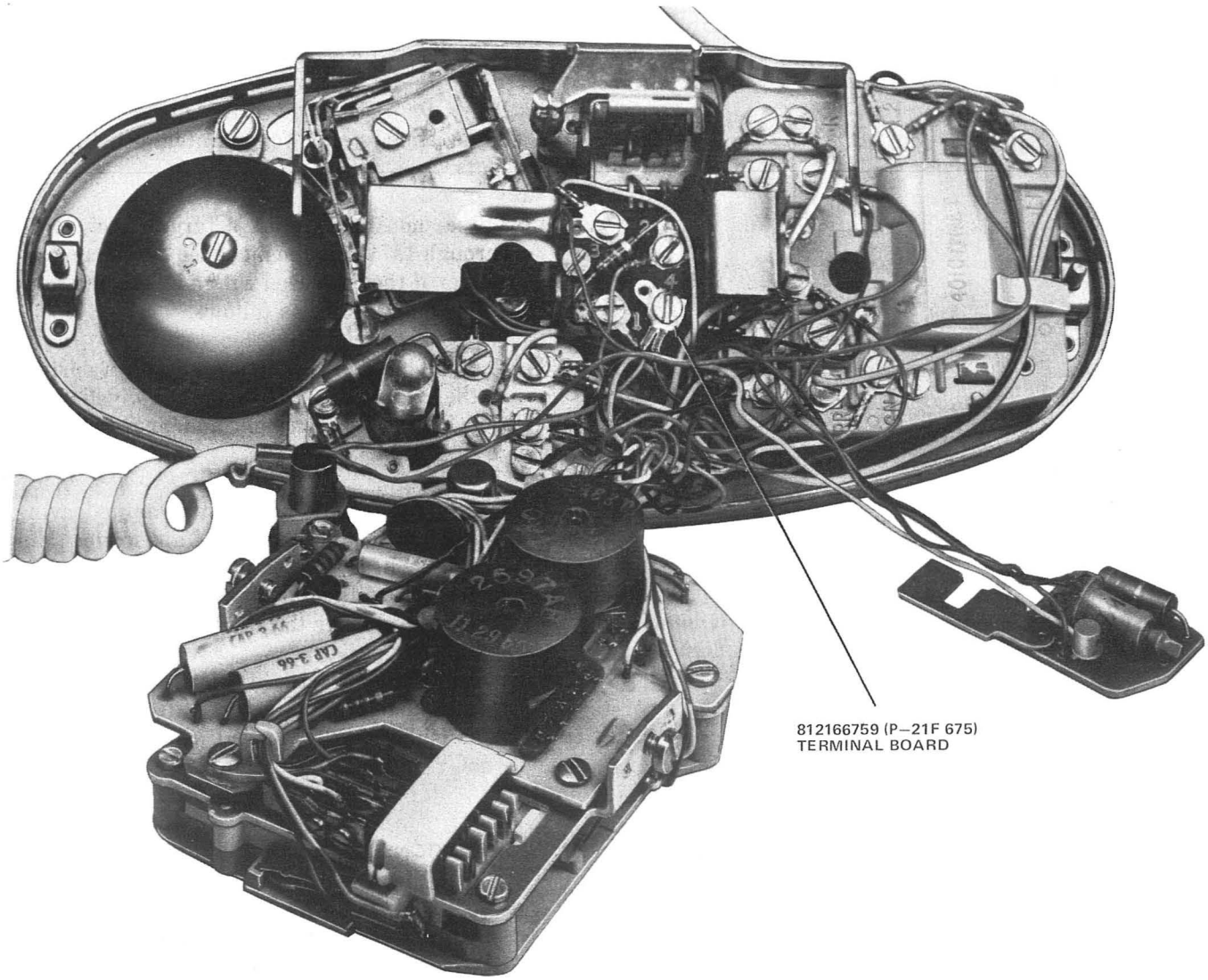

Fig. 9—▶812166759 (P-21F675) Terminal Board Installed in 2702D (MD) Telephone Set◀

TCI Library | www.telephonecollectors.info

TABLE D

TELEPHONE SET POLARITY GUARD CONNECTIONS (See Note)

TEL SET NET.	POLARITY GUARD	WIRE OR LEAD	COLOR	REMOVE FROM NET.	CONNECT TO	
					NET.	POLARITY GUARD
4010-Type	D-181063 Kit of Parts	Line Switch*	W	F		T
			BR	C		S
		Polarity Guard	G		F	
			W		C	
	D-180229 Kit of Parts	Dial	BK	RR		3†
		Line Switch*	BR	C		4†
		Polarity Guard	R			3†
			BK			4†‡
			G		RR	
			W		C	
4228-Type	D-180896 Kit of Parts	Line Switch*	W	F		T
			BR	C		S
		Polarity Guard	G		F	
			W		C	

Note: For use when specified by local instructions for end-to-end signaling installations.

* The M1W cord is used in place of (BR) line switch lead with 2702B (MD) and 2702BM (MD) telephone sets are modified for 1A1 or 1A2 key telephone system use.

† Terminals 3 and 4 are on terminal board which is part of D-180229 Kit of Parts.

‡ Connect to L2 of network when associated with 1A1 and 1A2 KTS.

TCI Library | www.telephonecollectors.info

Fig. 10—Polarity Guard (840364202) Installed In 2700-Type Telephone Set

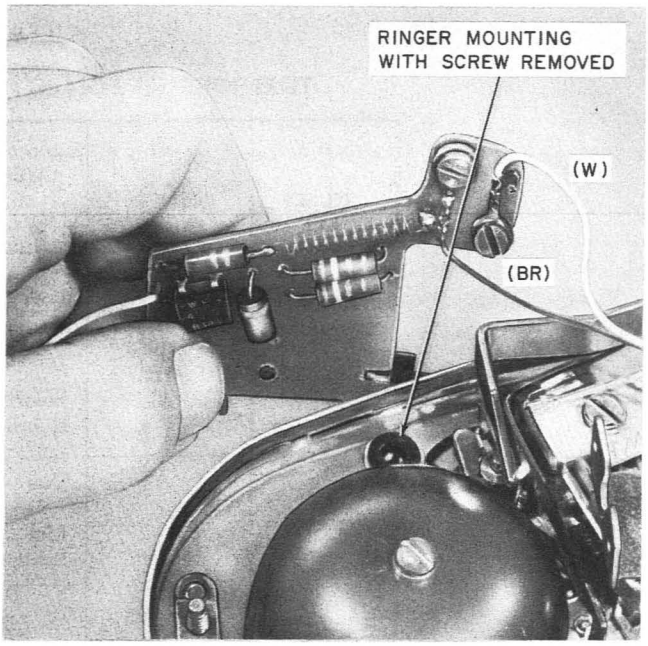

Fig. 12—Polarity Guard (840364426) Being Installed on Ringer Mounting

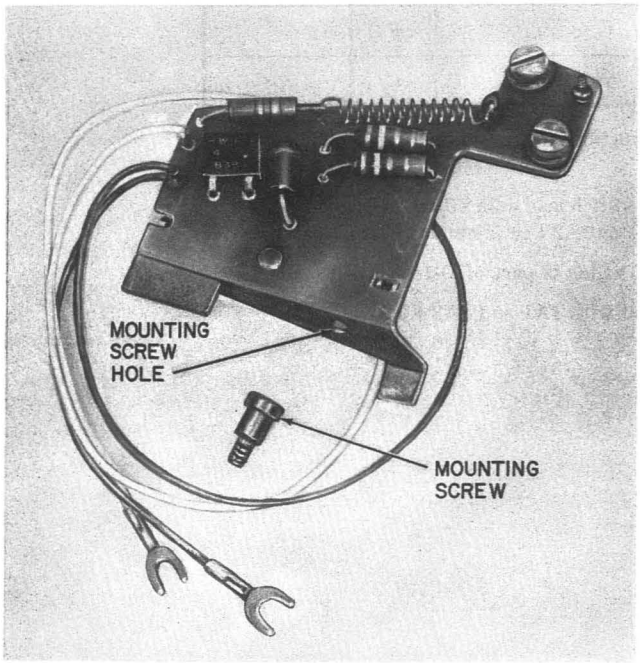

Fig. 11—D-181063 Kit of Parts

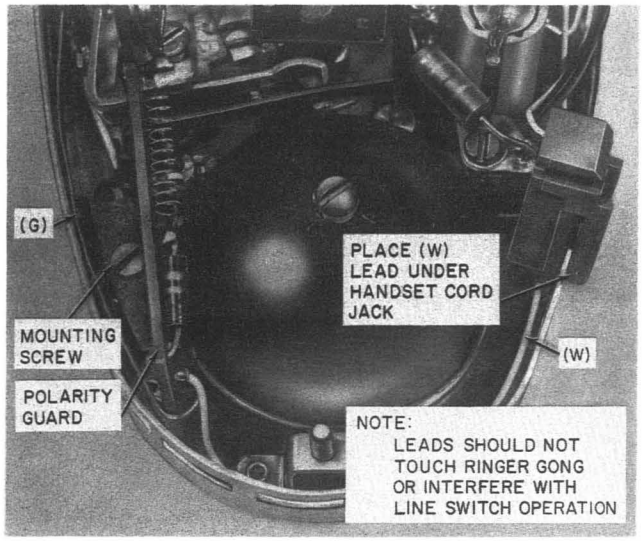

Fig. 13—Polarity Guard (840364426) Installed in 2700-Type Telephone Set

TCI Library | www.telephonecollectors.info

Fig. 14—Modification of Housing

TCI Library | www.telephonecollectors.info

TCI Library | www.telephonecollectors.info

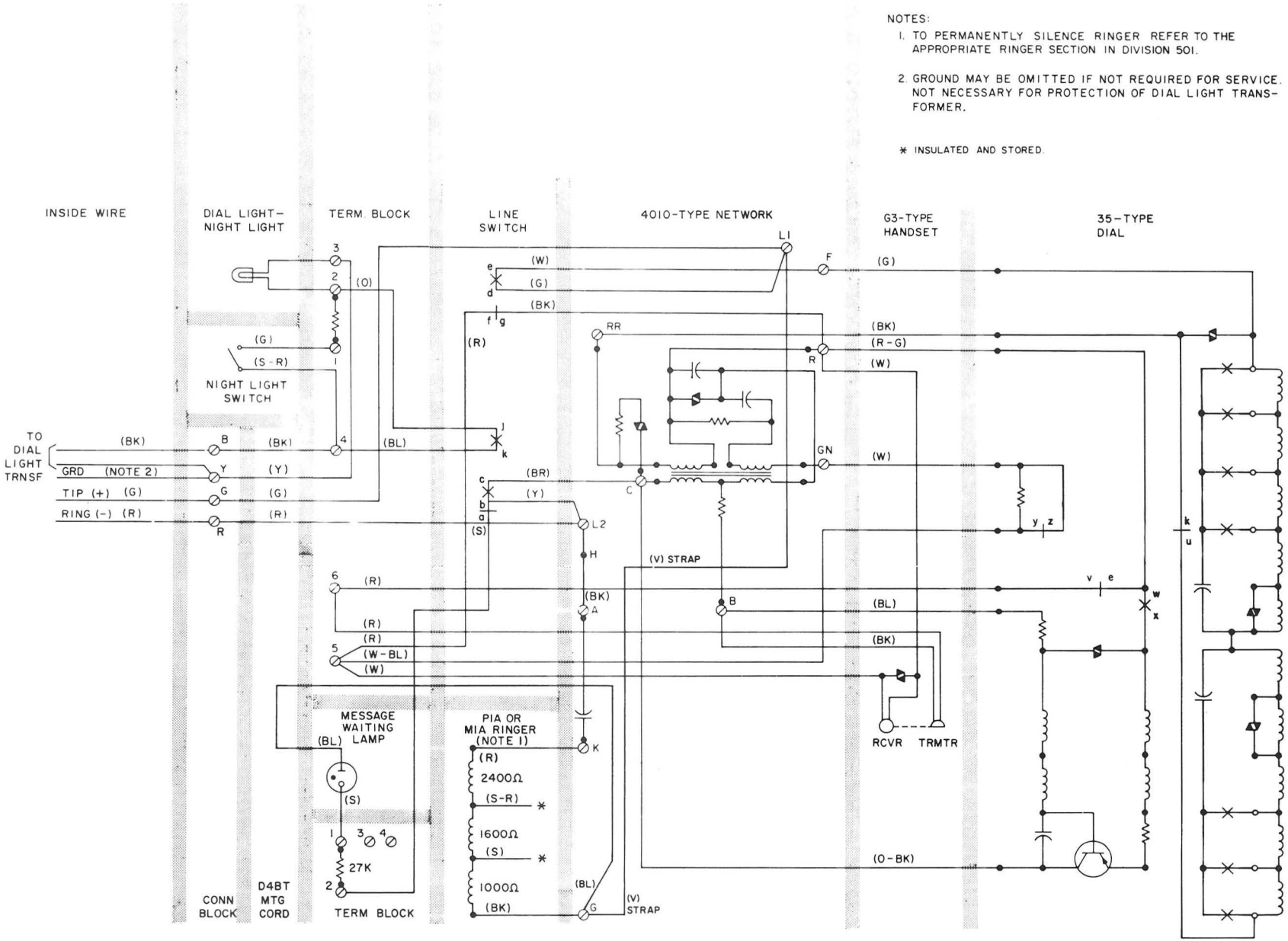

Fig. 15—2702D (MD) Telephone Set, Equipped With 4010D Network, Connections Using D4BT Mounting Cord

TCI Library | www.telephonecollectors.info

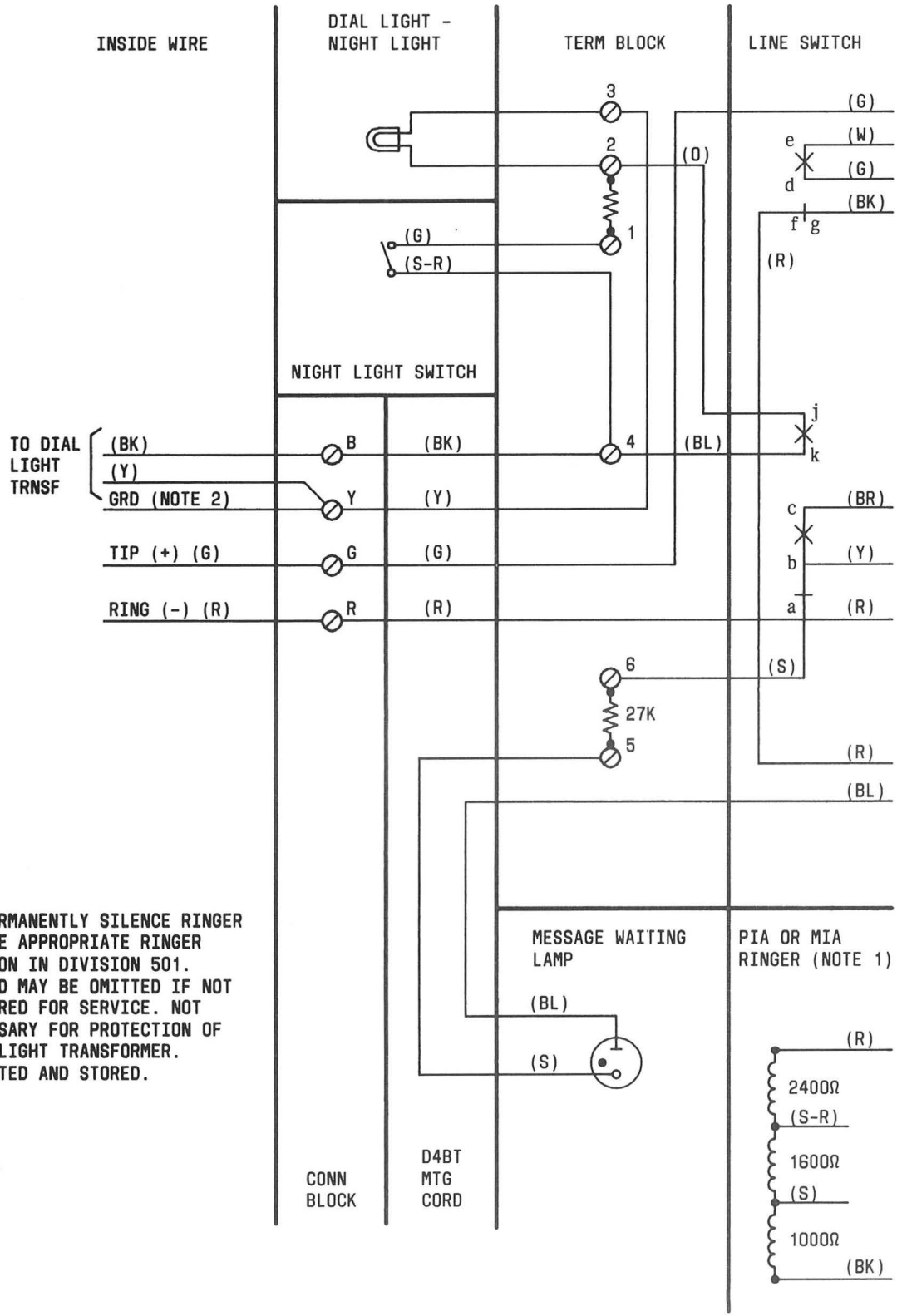

NOTES:
1. TO PERMANENTLY SILENCE RINGER TO THE APPROPRIATE RINGER SECTION IN DIVISION 501.
2. GROUND MAY BE OMITTED IF NOT REQUIRED FOR SERVICE. NOT NECESSARY FOR PROTECTION OF DIAL LIGHT TRANSFORMER.

* INSULATED AND STORED.

Fig. 16—2702D (MD) Telephone Set, Equipped With 4228G Network, Connections Using D4BT Mounting Cord (Sheet 1 of 2)

TCI Library | www.telephonecollectors.info

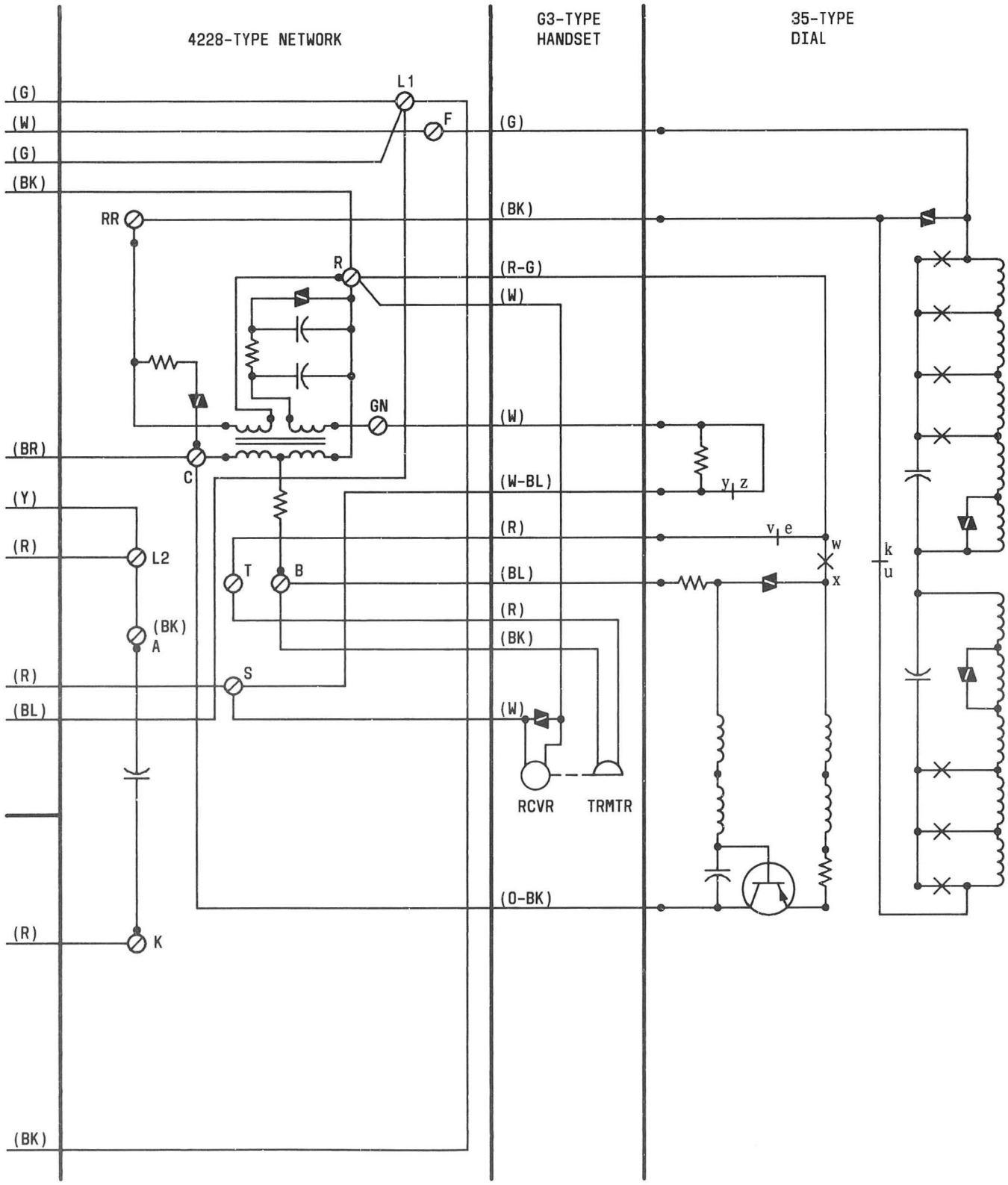

Fig. 16—2702D (MD) Telephone Set, Equipped With 4228G Network, Connections Using D4BT Mounting Cord (Sheet 2 of 2)

TCI Library | www.telephonecollectors.info

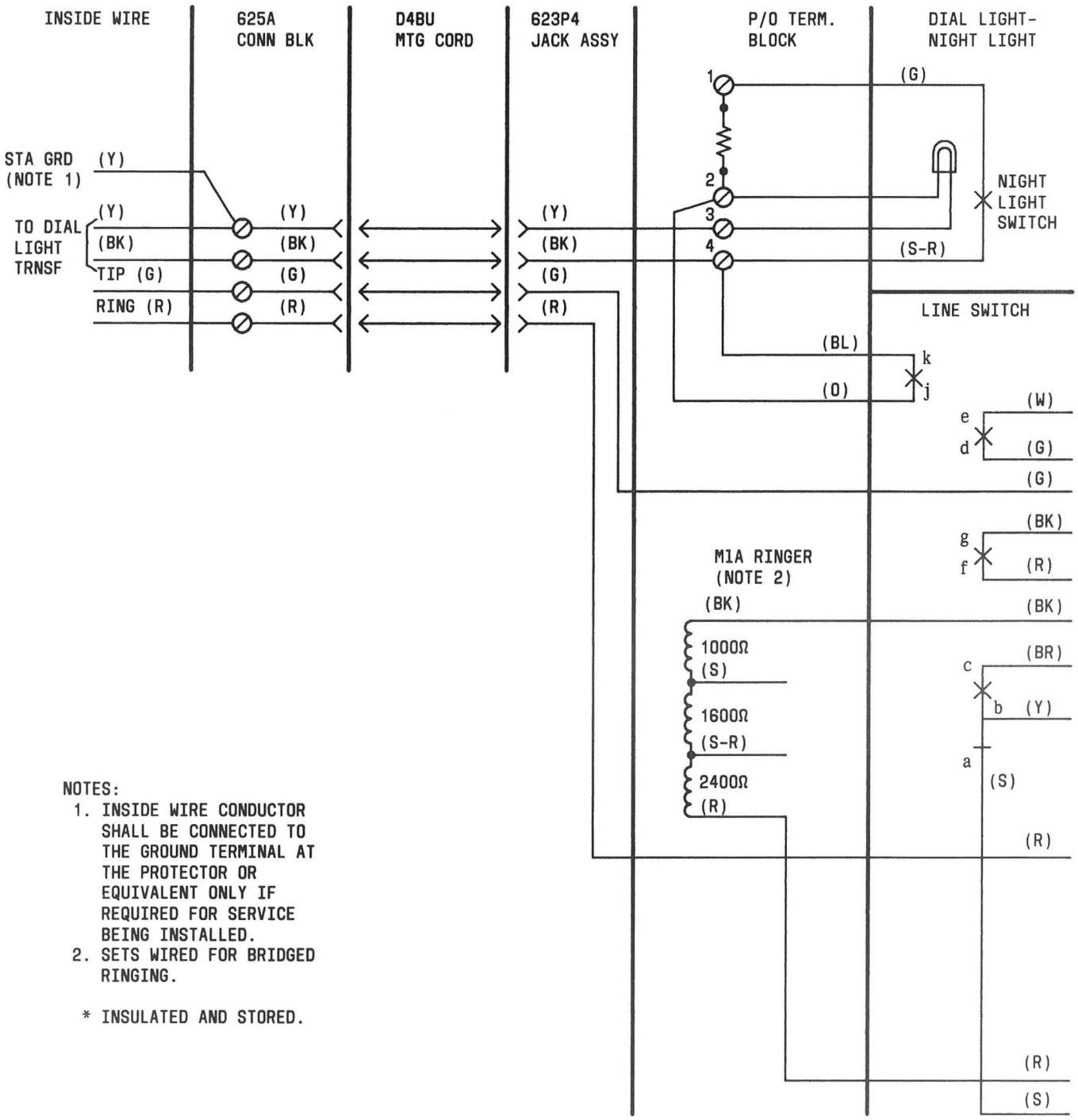

Fig. 17—2702DM (MD) Telephone Set, Equipped With 4010D Network, Connections (Sheet 1 of 2)

TCI Library | www.telephonecollectors.info

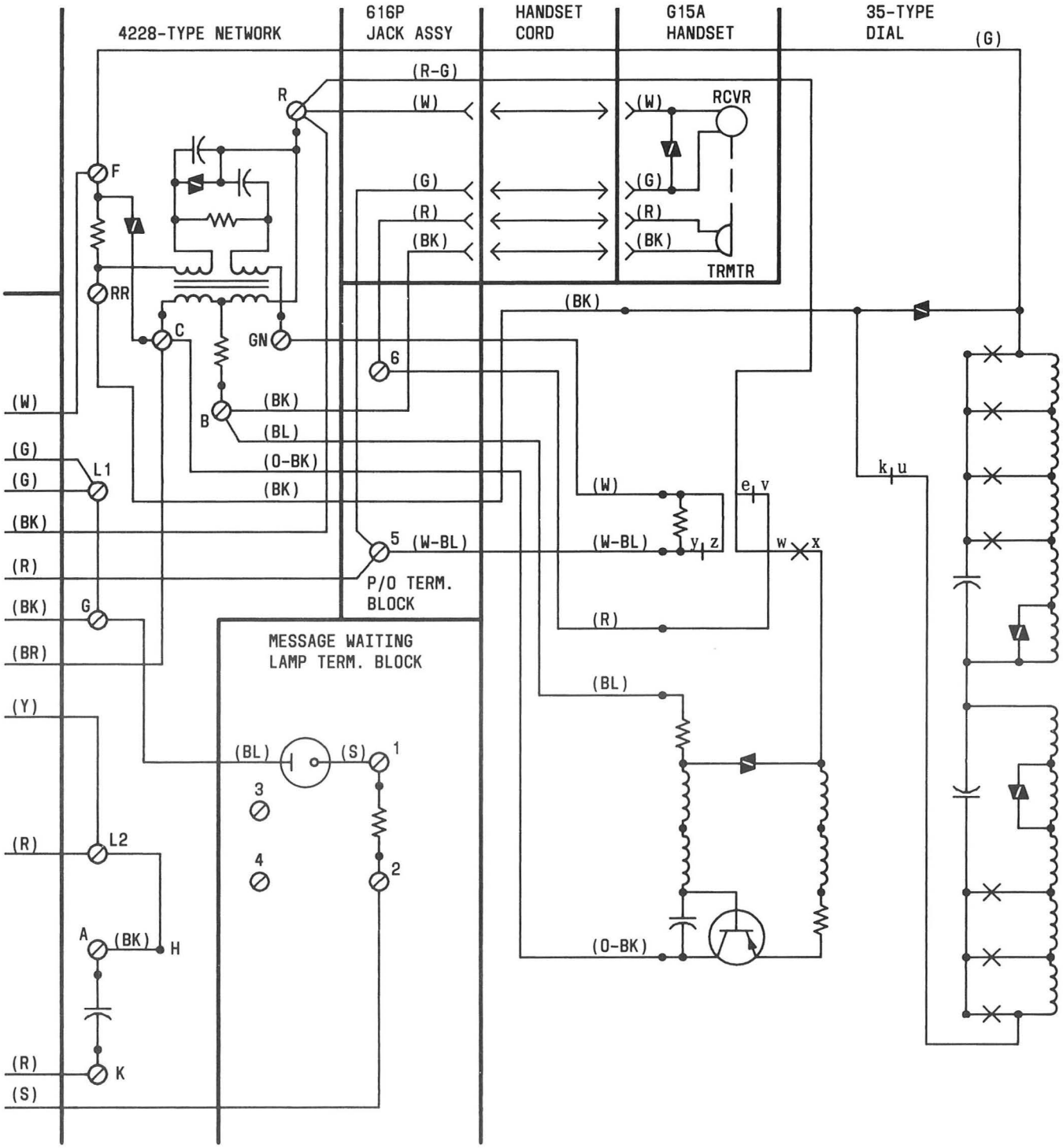

Fig. 17—2702DM (MD) Telephone Set, Equipped With 4010D Network, Connections (Sheet 2 of 2)

TCI Library | www.telephonecollectors.info

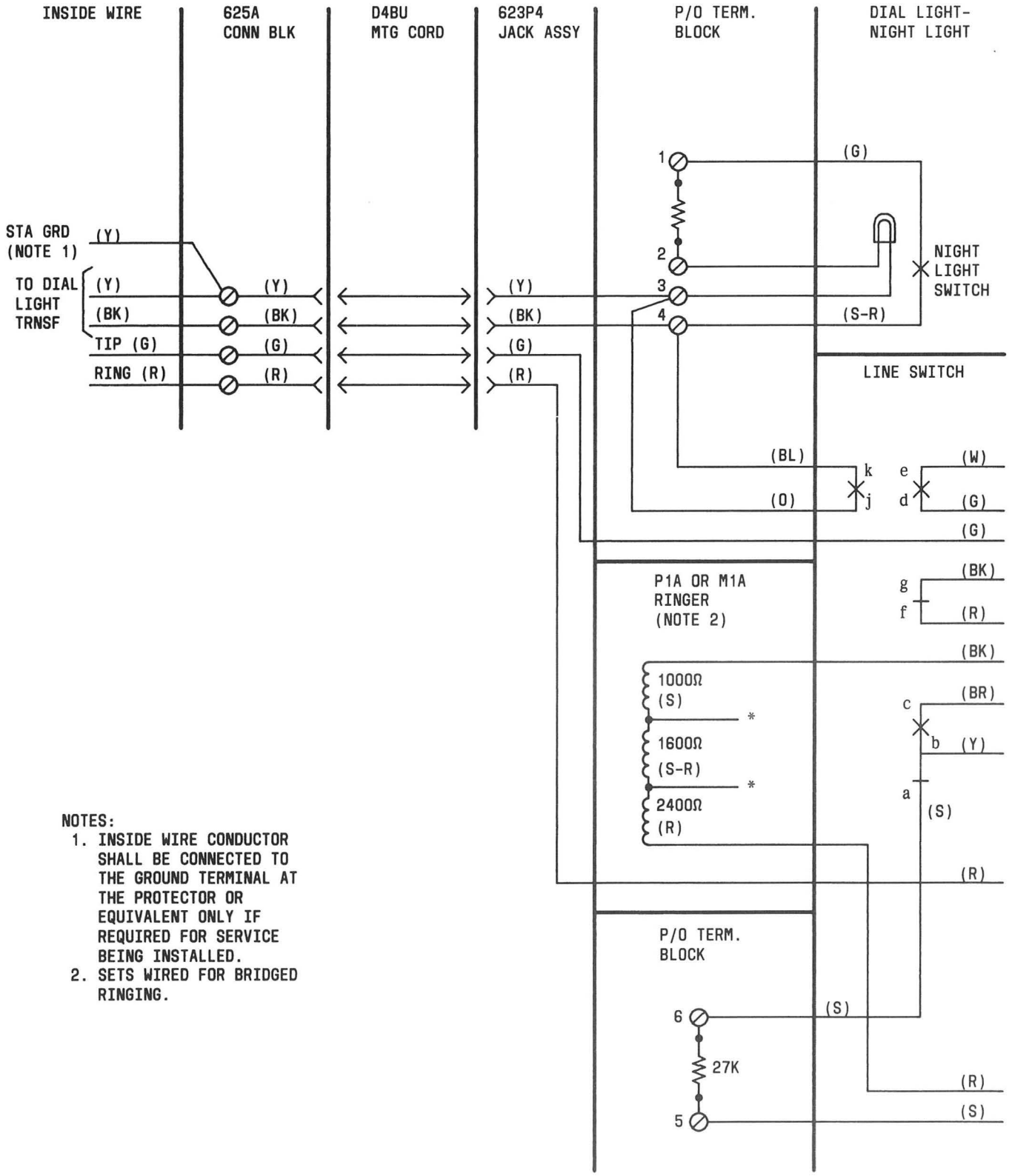

NOTES:
1. INSIDE WIRE CONDUCTOR SHALL BE CONNECTED TO THE GROUND TERMINAL AT THE PROTECTOR OR EQUIVALENT ONLY IF REQUIRED FOR SERVICE BEING INSTALLED.
2. SETS WIRED FOR BRIDGED RINGING.

Fig. 18—2702DM (MD) Telephone Set, Equipped With 4228G Network, Connections (Sheet 1 of 2)

TCI Library | www.telephonecollectors.info

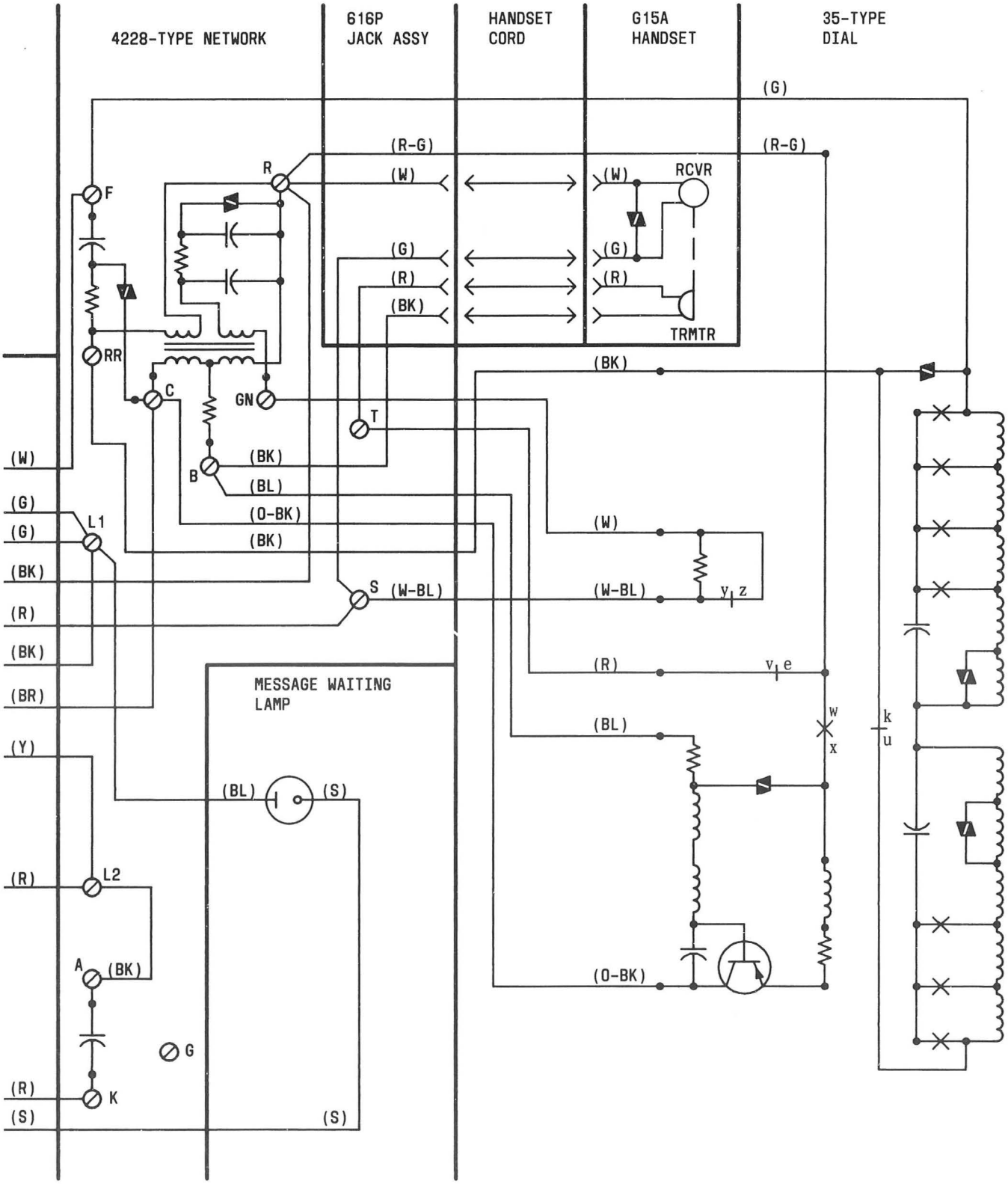

Fig. 18—2702DM (MD) Telephone Set, Equipped WIth 4228G Network, Connections (Sheet 2 of 2)

TCI Library | www.telephonecollectors.info

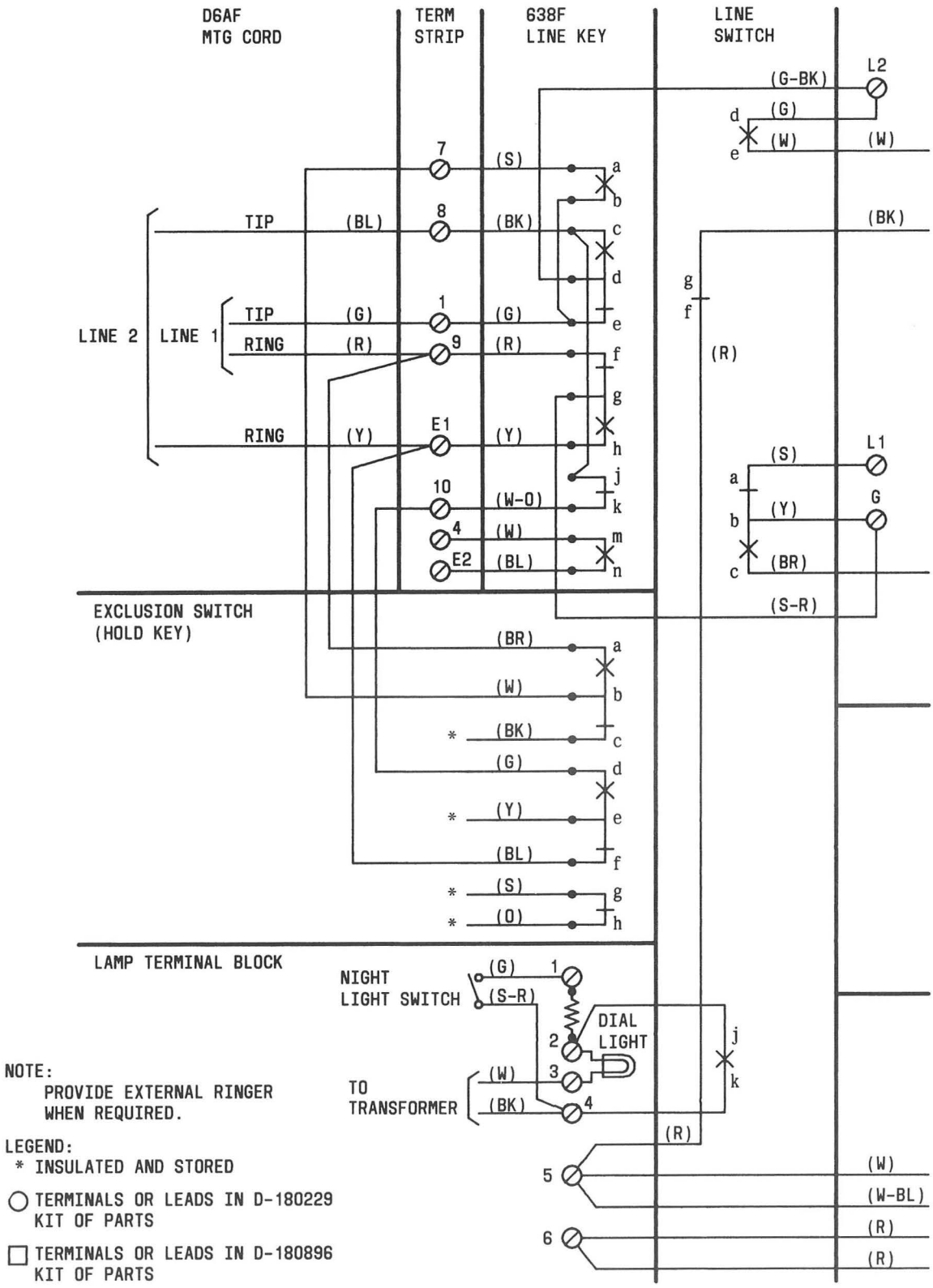

Fig. 19—▶2713B (MD) (Nonmodular) Telephone Set, Connections (Note) (Sheet I of 2)◀

TCI Library | www.telephonecollectors.info

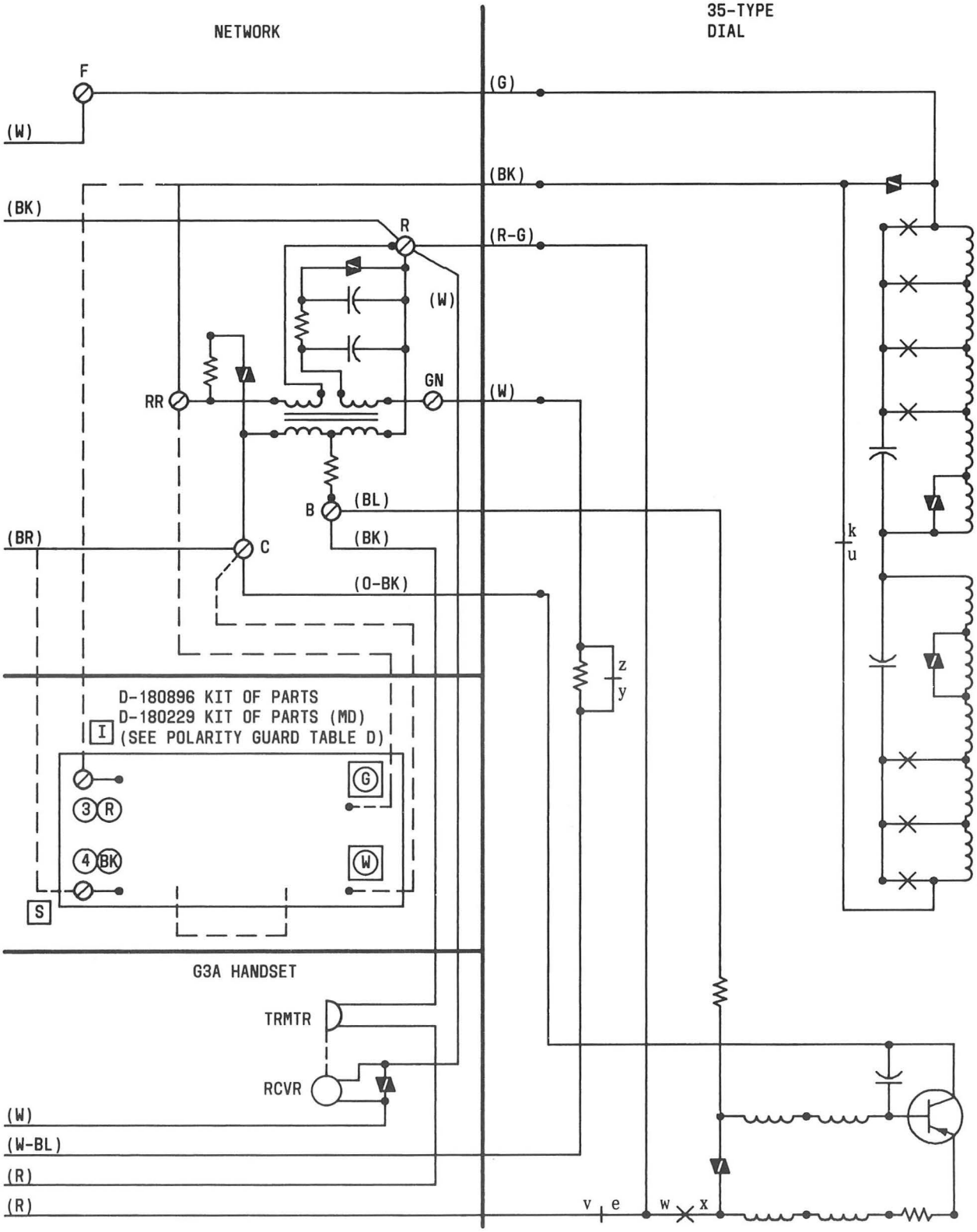

Fig. 19—2713B (MD) (Nonmodular) Telephone Set, Connections (Note) (Sheet 2 of 2)

TCI Library | www.telephonecollectors.info

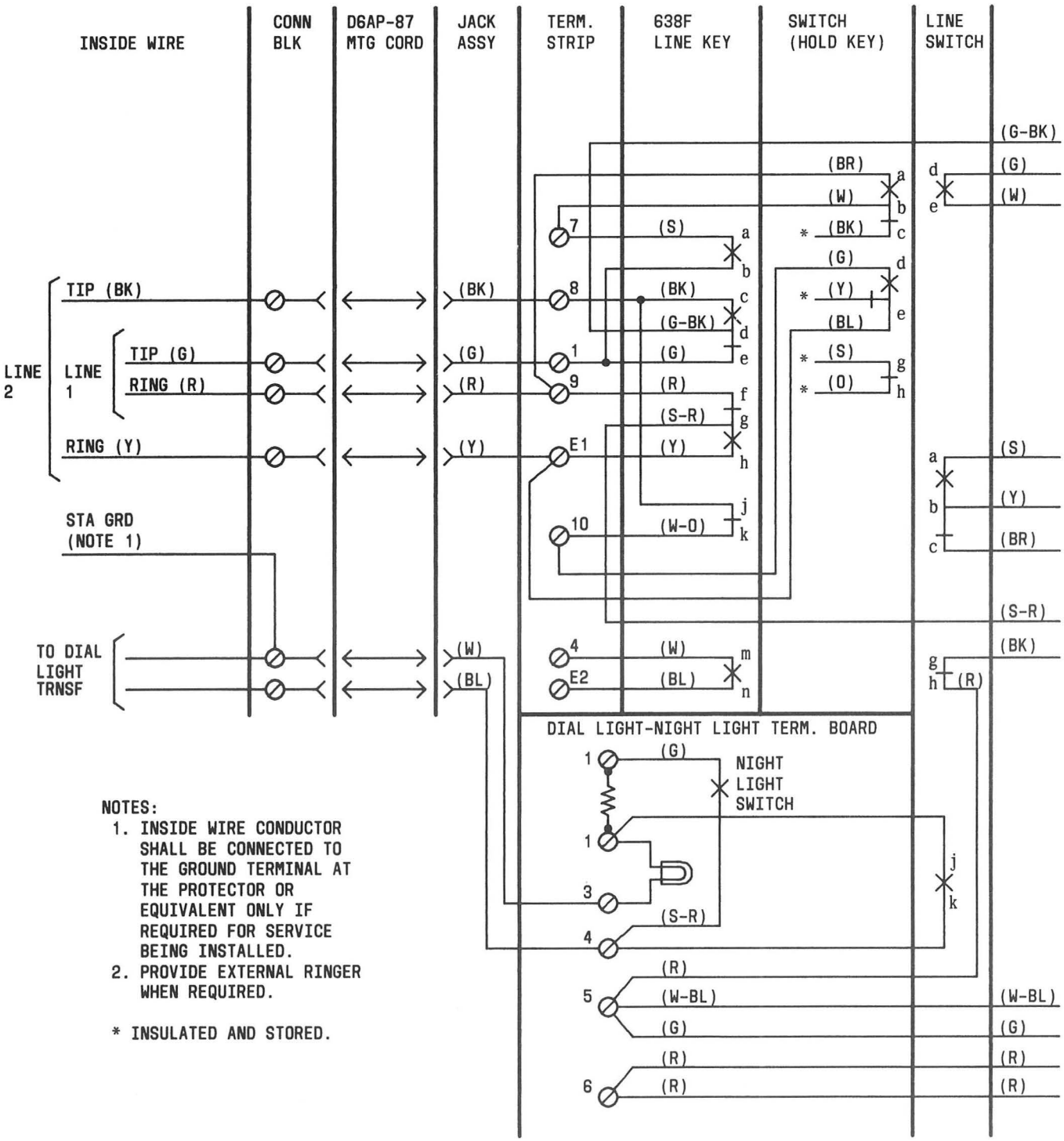

Fig. 20—▶2713BM Telephone Set, Connections (Sheet 1 of 2) (Note 2)◀

TCI Library | www.telephonecollectors.info

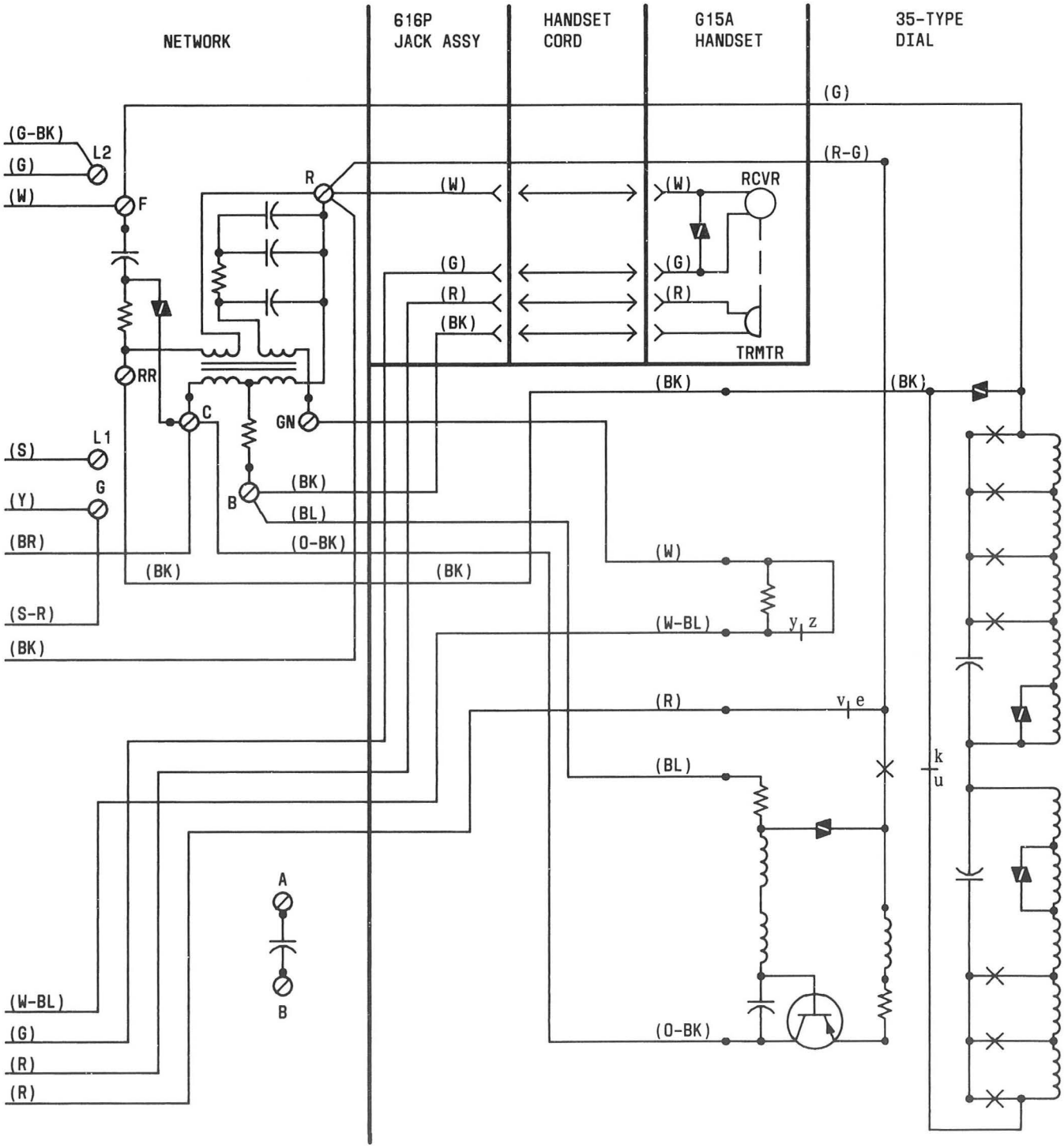

Fig. 20—▶2713BM Telephone Set, Connections (Sheet 2 of 2) (Note 2)◀

TCI Library | www.telephonecollectors.info

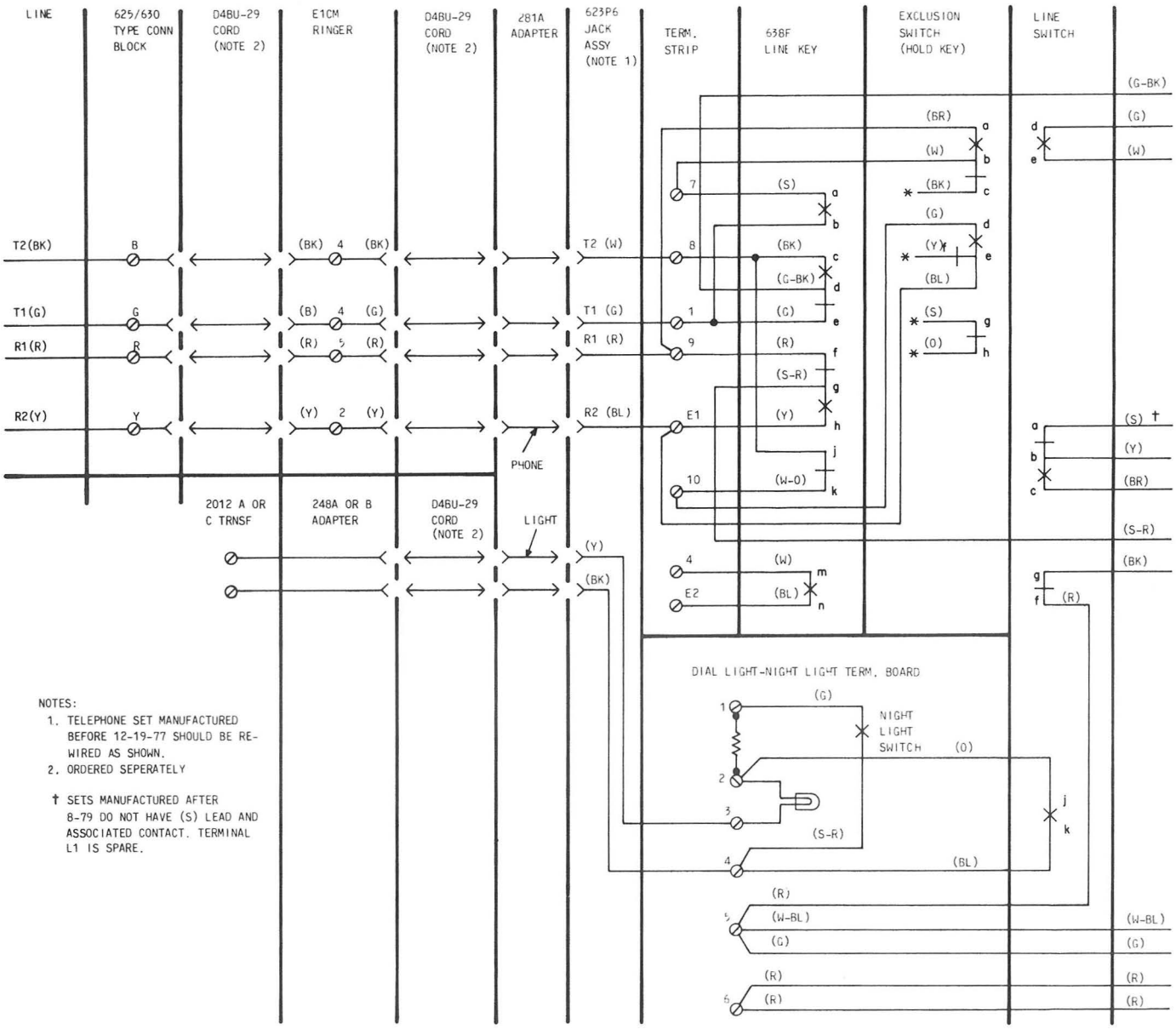

Fig. 21—2713BM Telephone Set, Connections Using E1CM Ringer (Sheet 1 of 2)

TCI Library | www.telephonecollectors.info

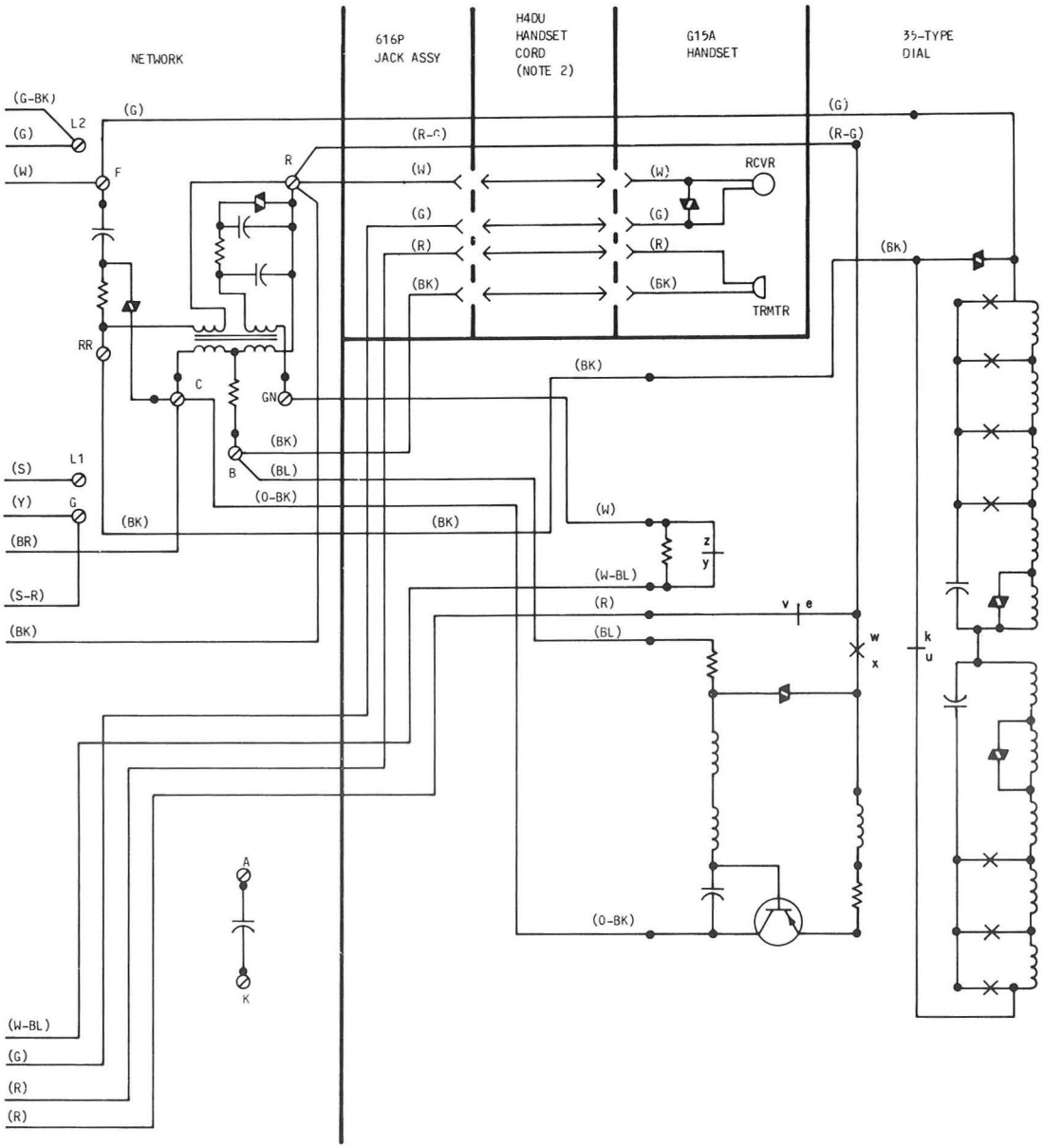

Fig. 21—2713BB Telephone Set, Connections Using E1CM Ringer (Sheet 2 of 2)

TCI Library | www.telephonecollectors.info

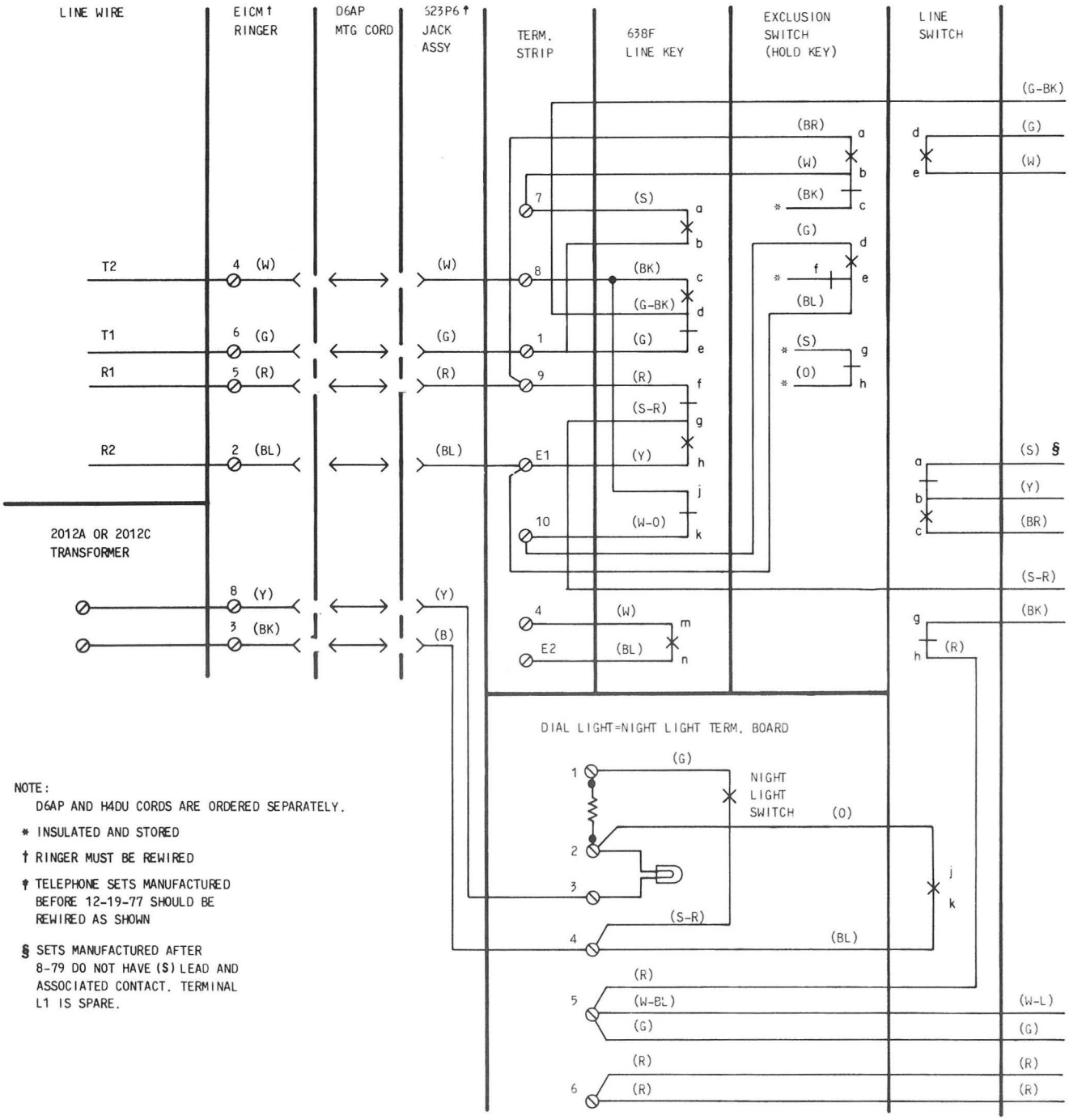

Fig. 22—2713BM Telephone Set, Connections Using a 281A (MD) Adapter and Two Mounting Cords to Set, Part of D-180819 (MD) Kit of Parts (Sheet 1 of 2)

TCI Library | www.telephonecollectors.info

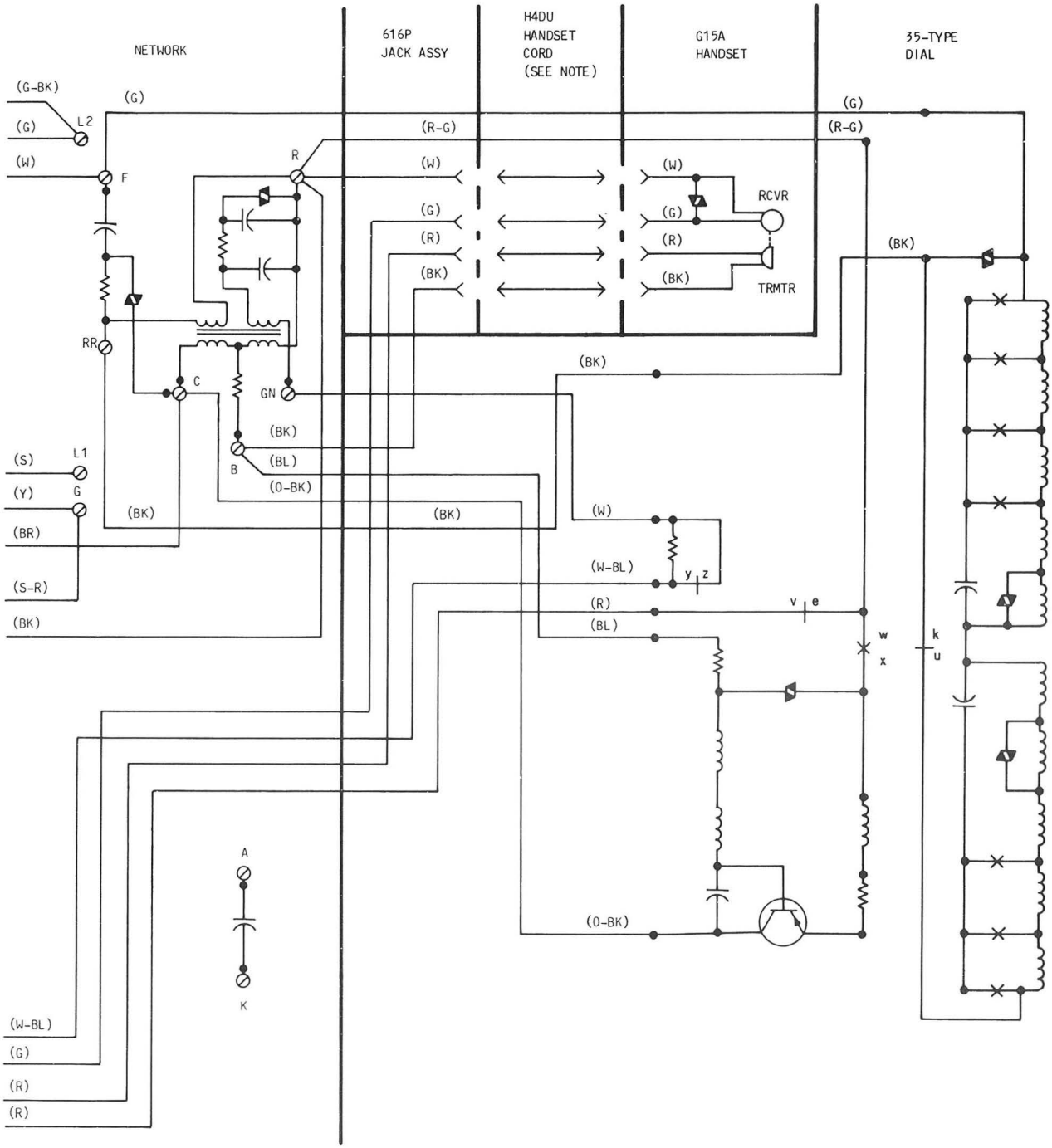

Fig. 22—▶2713BM Telephone Set, Connections Using a 281A (MD) Adapter and Two Mounting Cords to Set, Part of D-180819 (MD) Kit of Parts (Sheet 2 of 2)◀

TCI Library | www.telephonecollectors.info

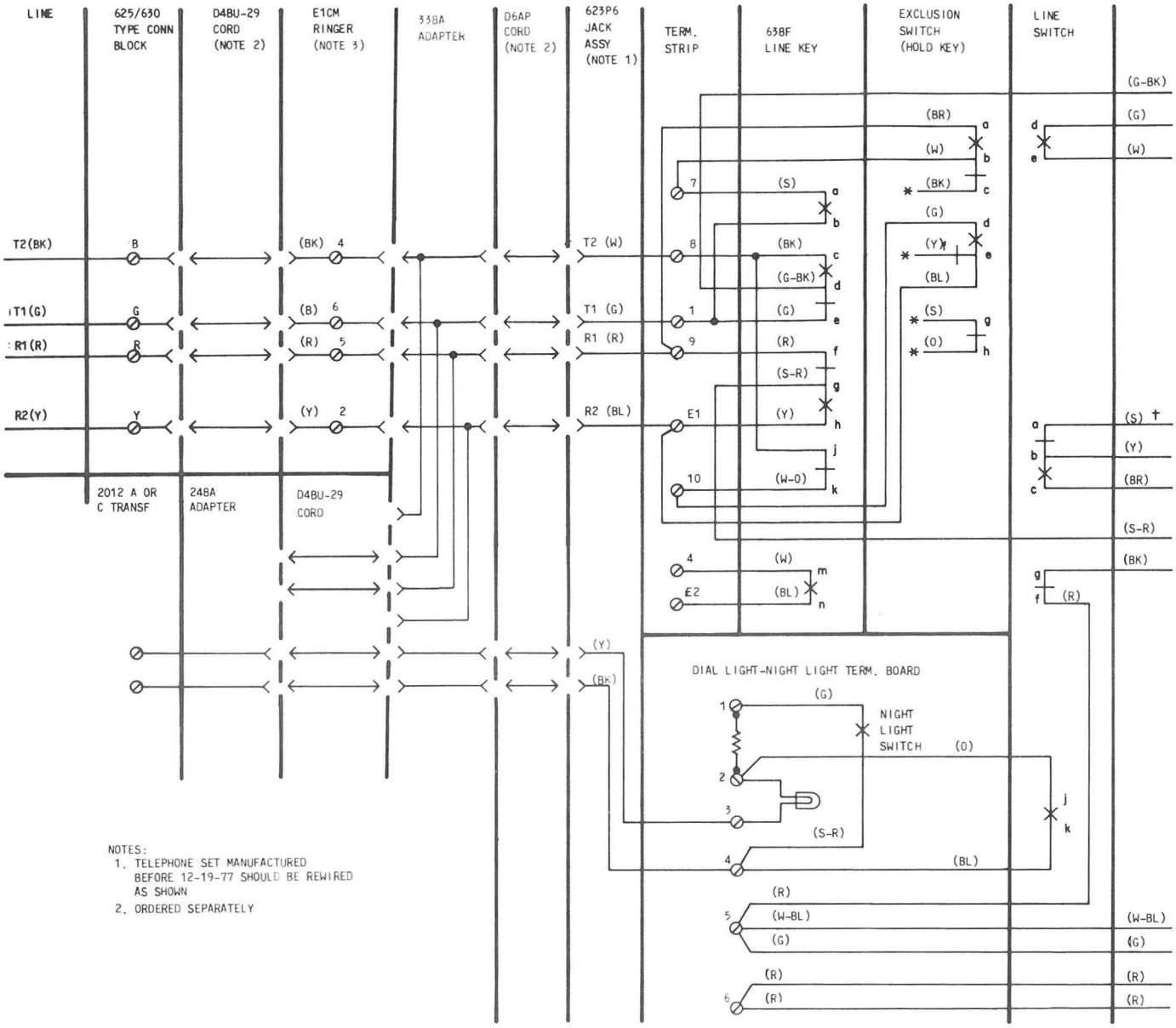

Fig. 23—2713BM Telephone Set, Connections Using a 338A Adapter With One Mounting Cord to Set, Part of D-181059 Kit of Parts (Sheet 1 of 2)

TCI Library | www.telephonecollectors.info

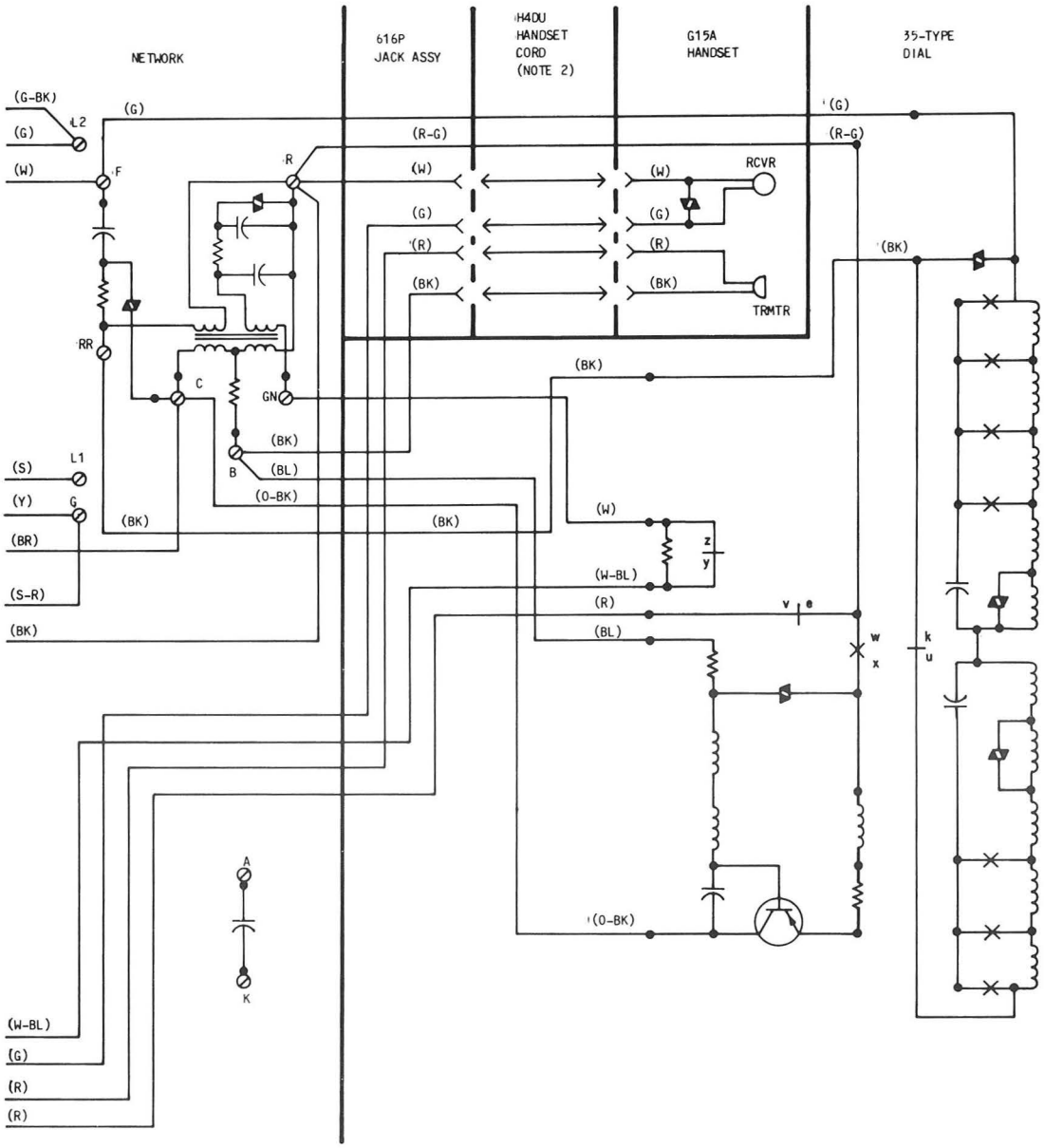

Fig. 23—◆2713BM Telephone Set, Connections Using a 338A Adapter With One Mounting Cord to Set, Part of D-181059 Kit of Parts (Sheet 2 of 2)◆

TCI Library | www.telephonecollectors.info