TELEPHONE SETS
1702B-TYPE
CONNECTIONS

TABLE A

LINE CONNECTIONS FOR BRIDGED AND RING PARTY SERVICE

WIRE OR LEAD		COLOR	INDIVIDUAL OR BRIDGED	RING PARTY
D5AK Mtg. Cord at Conn. Block		(R)	R	R
		(G)	G	G
		(Y)	G	Y
		(BK)	B	B
		(W)	Y	Y
Inside Wire at Conn. Block	Ring	(R)	R	R
	Tip	(G)	G	G
	Grd.	(Y)	Y	Y
Conn. For Dial Light Trnsf at Conn. Block			Y	Y
			B	B

Note: Sets are shop wired for ring party or bridged service. See Table B for modification of set for tip party service.

TABLE B

LINE AND RINGER CONNECTIONS FOR TIP PARTY SERVICE

WIRE OR LEAD	COLOR	NO. IDENT GROUND	IDENT GROUND 1000 OHM	IDENT GROUND 2650 OHM
Ringer at Net.	(S-R)	*	*	L1
	(S)	*	L1	*
Line Switch at Net.	(BR) [S-BR]	F	F	F
	(W) [S-W]	C	B	B
D5AK Cord at Net.	(G)	L1	C	C
D5AK Cord at Conn. Block	(R)	G	G	G
	(G)	R	R	R
	(Y)	Y	Y	Y
	(BK)	B	B	B
	(W)	Y	Y	Y

* Insulated and stored

( ) Current color code

[ ] MD color code

Notes: 1. See Table A for inside wiring and dial light transformer lead connections at connecting block.

2. If (BK) strap is present between network terms. *H* and *A* remove from *A*; insulate and store.

Note 3: When connecting the D5AK mounting cord leads for tip party identifying ground, use D-161488 connectors and M1W straps as required to extend conductor leads.

TABLE C

POLARITY GUARD CONNECTIONS FOR NONKEY TELEPHONE SYSTEMS (D-180229 KIT OF PARTS)

WIRE OR LEAD	COLOR	REMOVE FROM NETWORK	CONNECT TO NETWORK	CONNECT TO TERM BOARD*
Dial	BK	RR		3
Line Switch	(BR) [S-BR] ①	C		4
	(W) [S-W] ②			
D5AK Cord	(G) ③			
D-180229 Polarity Guard	(R)			3
	(BK)			4
	(G)		RR	
	(W)		C	

* Component of polarity guard assembly
① If wired for ring or bridged service
② If wired for tip party (no identification ground)
③ If wired for tip party (with identification ground)

( ) Current color code
[ ] MD color code
Note: Install polarity guard assembly only when specified by local instructions for end-to-end signaling.

© American Telephone and Telegraph Company, 1968
Printed in U.S.A.

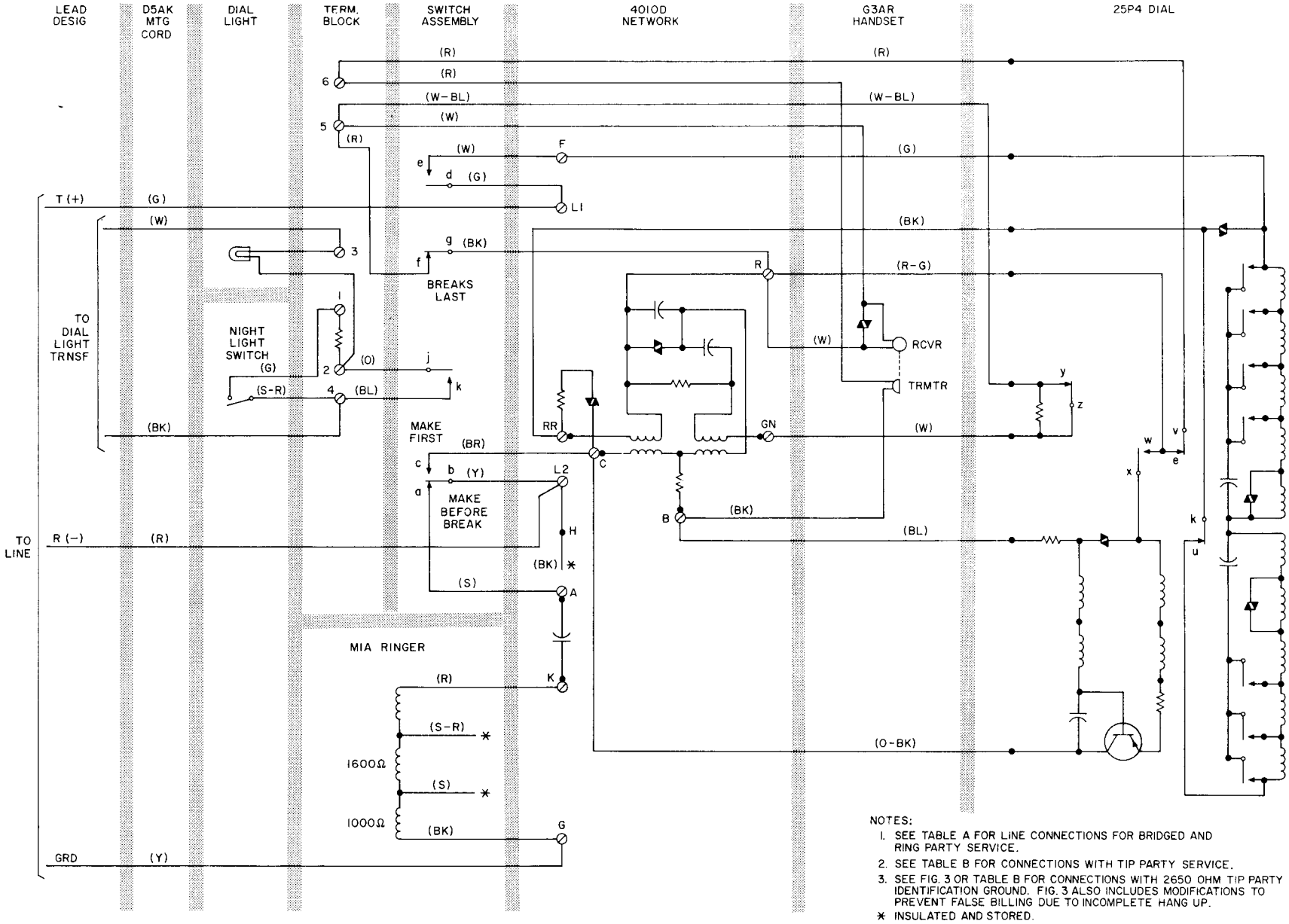

Fig. 1 — 1702B Telephone Set (Current Production) Using 25P4 Dial and 4010D Network

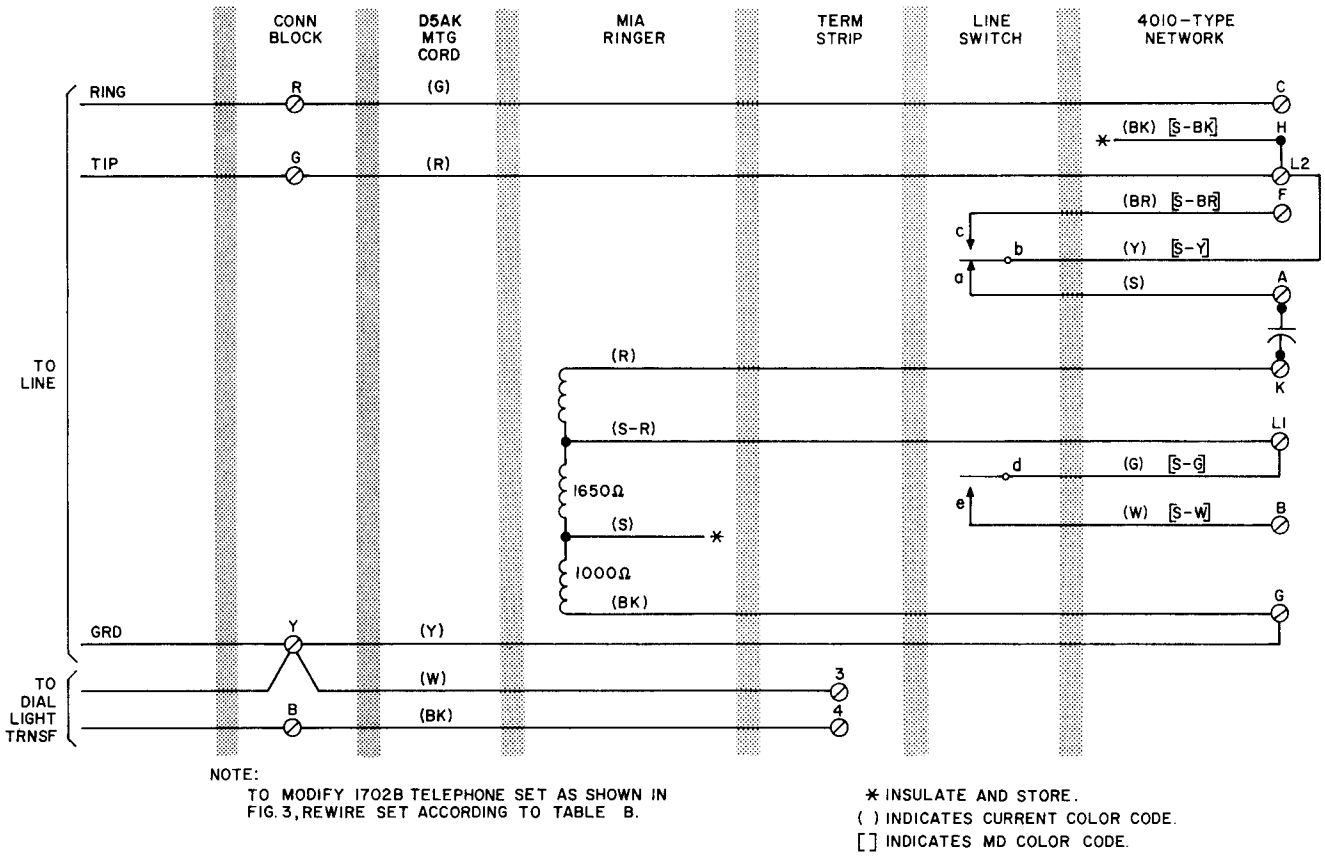

Fig. 3 — 1702B Telephone Set, Wired Line For 2650 ohm Tip Party Identification Ground