COIN COLLECTORS - PREPAY

234 (G)
230, 233 (C, D, G, H)
220, 223 (CT, DT, GT, HT)
191, 195, 196, 197 (CNT, DNT, GNT, HNT)
CONNECTIONS

1. This section is reissued to add information on the D5AM cord.

1.01 The D5AM cord replaces the D5AF cord which is rated Manufacture Discontinued.

CIRCUIT DIAGRAM NOTES

( ) Indicates current color code.
[ ] Indicates MD color code.

Note 1: Dotted lines in diagram show manual set connections.

Note 2: New manufactured sets are wired as drawn. On converted 190 series sets, if the BR lead does not reach the BKX terminal, it is terminated on a BK terminal and a black strap connects BK and BKX.

Note 3: When a 61R filter is required for radio frequency suppression, move yellow dial lead from Y upper housing contact spring to filter bracket terminal and connect filter leads as follows:

- Yellow lead to filter bracket terminal.
- Black lead to BK or BKX upper housing contact.
- Red lead to Y upper housing contact.

Note 4: When coin collector is installed in a KS-14611, List 2 booth or a KS-16705 mounting, the tip and ring line terminations are connected directly to the subscriber set.

Note 5: New manufactured sets are wired as shown in 2. To rearrange for use with 685B subscriber set, disconnect yellow strap between T terminal and coin relay and wire as shown in 3. Insulate and store yellow strap for future use.

2. Circuit diagram for connection with 685A network-type subscriber set.

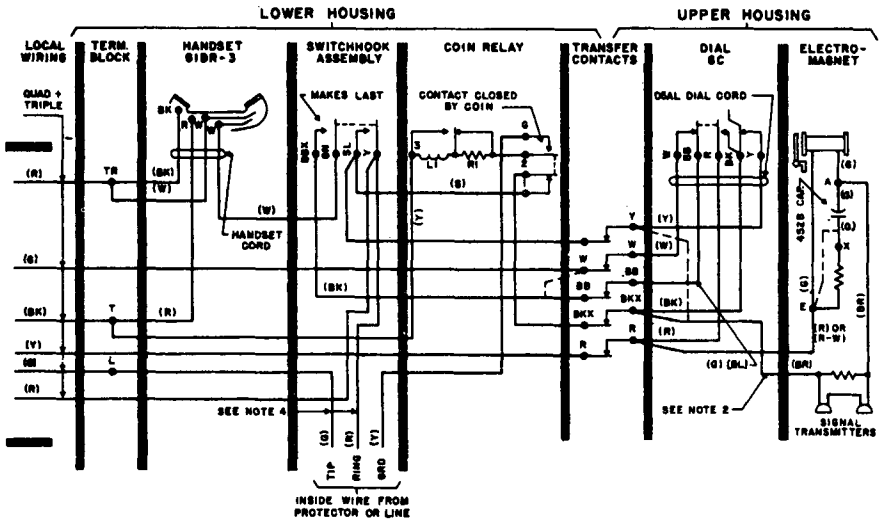

See notes 1, 2, 3, and 4

3. Circuit diagram for connection with 685B network-type subscriber set.

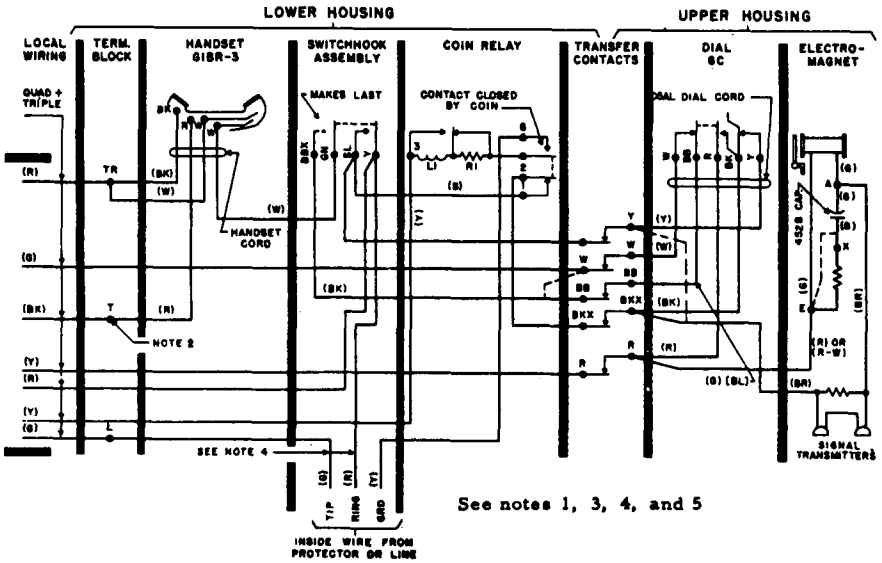

See notes 1, 3, 4, and 5

© American Telephone and Telegraph Company, 1964
Printed in U. S. A.