SERVICE
1A2 KEY TELEPHONE SYSTEM
KEY TELEPHONE UNITS
CONTROL SERVICES

1. GENERAL

1.01 This section provides schematic information for the 400-series KTUs which provide control and switching circuits. These units provide for extending visual and audible signal arrangements.

1.02 This section is reissued to:

- Provide additional information on the 421A KTU
- Remove contact protection networks from Fig. 5, 412A KTU
- Provide a schematic diagram (Fig. 8) for a new circuit arrangement using the 421A KTU
- Change Fig. 9 to show the 421A KTU as a general purpose relay
- Remove all information on the 470A KTU which was never manufactured
- Correct errors in lead designations and terminal numbers in Fig. 10
- Change notes in Fig. 10 and 11.

1.03 The following KTUs and their functions are covered in this section:

- 402A—Diode Matrix
- 404A—Diode Matrix
- 412A—Auxiliary Relay Circuit
- 413A—Auxiliary Ringup Circuit
- 421A—Power Failure Transfer Circuit, Audible Signal Suppression Circuit, or General Purpose Relay
- 448A—Delayed Transfer Control Circuit
- 449A—Immediate Transfer Control Circuit
- 467A—Low-Voltage Monitor Circuit
- 469A—Lamp Extender Circuit.

1.04 Information on line services is covered in 518-215-400; auxiliary line service, 518-215-401; intercom services and associated features, 518-215-402. Section 518-215-100 contains general information on the 1A2 Key Telephone System.

Mechanical

1.05 All circuit components on these KTUs are mounted on a plug-in printed wiring board, one end of which is equipped with contacts. A 4-inch board may have 18-, 20-, or 40-contacts; an 8-inch board will have 80 contacts (requiring two vertical 40-pin connectors). The circuit boards plug into mating connectors in key service units (KSUs), panels, or apparatus mountings. Wiring from the connectors will be dedicated or nondedicated leads. Dedicated leads are those that normally appear on the same contacts of all KTUs, such as supply voltages and grounds, and are normally factory-wired. Nondedicated leads are those whose designation and function vary and are made available for installer connections. Fig. 1 and 2 show typical 4- and 8-inch KTUs.

NOTICE
Not for use or disclosure outside the
Bell System except under written agreement

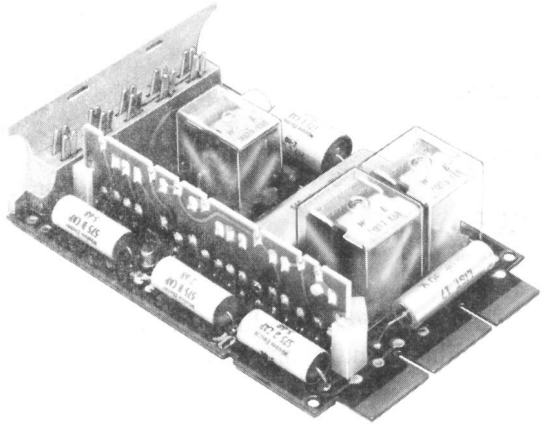

Fig. 1—Typical 4-Inch Key Telephone Unit

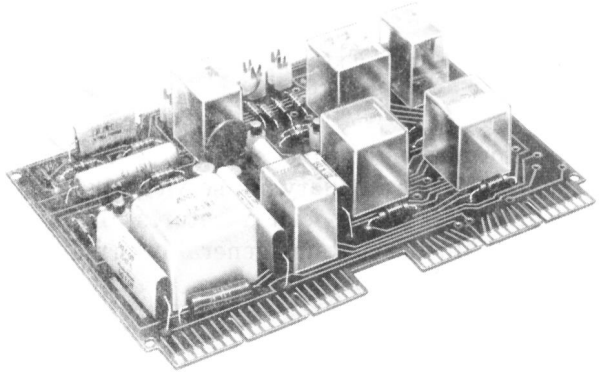

Fig. 2—Typical 8-Inch Key Telephone Unit

Electrical

1.06 Functional schematics (Fig. 3 through 13) cover the basic circuitry of each KTU, contacts used, and its relationship to telephone sets, other KTUs, power supplies, and apparatus. Dashed lines are used to simplify the schematic and to indicate intermediate circuitry. If full schematics are required, refer to the SDs listed in 1.09.

1.07 Voltages required for operation of the KTU, or provided to associated apparatus by the KTU, are shown with their connector pins. Other voltages may appear on the contacts of the mating connector, depending on the mounting arrangement, but not on the KTU.

1.08 KTUs may require the following power supply voltages and their associated grounds:

-24V (B battery) for control
-24V (A battery) for talk
±10V for visual and audible signals
±105V for audible signals

1.09 This issue of the section is based on the following drawings:

SD-69552-01, Issue 4—412A KTU

SD-69590-01, Issue 3—413A, 421A, 448A, and 449A KTUs

SD-69917-01, Issue 1—467A KTU

SD-69559-01, Issue 9B—469A KTU

If this section is to be used with equipment or apparatus reflecting later issues of the drawings, reference should be made to the CDs and SDs to determine the extent of the changes and the manner in which the section may be affected.

2. IDENTIFICATION

402A KTU (Diode Matrix)

2.01 The 402A KTU (Fig. 3) is used with the 1A1 KTS in existing spare space of the 501- and 502-type KSUs to control station common audible signals. The unit provides control for four lines and six audible signals, or vice versa, and uses 533F diodes which must be locally provided.

404A KTU (Diode Matrix)

2.02 The 404A KTU (Fig. 4) is a 4-inch, 18-contact unit capable of controlling 6 lines and 12 audible signals or vice versa. The unit is for use with a 259-type KTU, or equivalent adapter, and uses 533F diodes which must be locally provided.

412A KTU (Auxiliary Relay Circuit)

2.03 The 412A KTU (Fig. 5) is for use as a panel slave relay to augment signal interrupter lamp capacity for large installations. The KTU is arranged to plug into 584-type panels. It contains four dc operated mercury relays for lamp flash or lamp wink control. Each relay can control a maximum of one hundred 51A- or 53A-type lamps.

Each relay is also arranged so that it may be controlled individually. Coils are provided with protection networks.

413A KTU (Auxiliary Ringup Circuit)

2.04 The 413A KTU (Fig. 6) is a 4-inch, 18-contact unit providing an auxiliary nonlocking ring detector for use on CO or PBX lines supplying either 20- or 30-Hz ringing voltage. Contacts of the ringup relay can be used for controlling external signaling functions or relays. The KTU has the following operating features:

- Ringing voltage applied to RC lead by R relay operation
- Audible signaling control options
- Two spare pairs of relay contacts for local engineering (one make and one break)
- Ringing ranges are:

MINIMUM RMS RINGING VOLTAGE	NUMBER OF BRIDGED RINGERS*	
	STANDARD LOOPS 15K-OHM LEAKAGE	UNIGAUGE LOOPS 20K-OHM LEAKAGE
84 volts (20 Hz)	0-2	0†

*Refer to SD-69590 for specific information on worst possible cases.

†One bridged ringer will operate on approximately 2000 ohms.

421A KTU (Power Failure Transfer Circuit, Audible Signal Suppression Circuit, or General Purpose Relay)

2.05 The 421A KTU is a 4-inch, 40-contact unit that can be used to automatically transfer a maximum of three station ringers from a common audible connection to a line ringing connection in the event of a power failure (Fig. 7). ▶The 421A KTU can be used to suppress (cut off) audible signals on a line or lines associated with a key telephone set when that set is off-hook (Fig. 8).◀ It can also be used as a general purpose relay (Fig. 9). The KTU has the following operating features:

- Relay normally energized; for use during local power failure.
- Used with common audible matrix.
- Option strapping when used as a general purpose relay.
- Maximum external circuit loop resistance is 120 ohms.

▶It is recommended that the use of an audible signal suppression circuit on CO and PBX lines be restricted to installations having multiple ringers. Otherwise, incoming calls may be lost when a station is off-hook and the 421A KTU cuts off the audible signal.◀

448A KTU (Delayed Transfer Control Circuit)

2.06 The 448A KTU (Fig. 10) consists of two identical circuits mounted on a 4-inch printed wiring board. Each circuit is a variable delay timer which allows the ringer at the principal station to ring for a predetermined interval of time. The timer is factory-adjusted to time-out in 6-1/2 seconds, but it may be adjusted for a time-out interval of 1 to 30 seconds. When the timer times out, ringing is transferred to the attendant station. Lamp signals are provided at the principal station in the normal manner. Lamp flash starts at the attendant station when ringing is transferred.

449A KTU (Immediate Transfer Control Circuit)

2.07 The 449A KTU (Fig. 11) consists of two identical circuits mounted on a 4-inch printed wiring board. Each circuit consists of an electrical flip-flop which provides immediate transfer of ringing. The flip-flop is activated by a nonlocking key located at the principal station. When the key is operated, the flip-flop locks up to transfer incoming ringing from the principal station to the attendant station. A steady lamp indication is provided at the principal station when the nonlocking key is operated and the flip-flop is locked up. The transfer is canceled by operating the nonlocking control key a second time.

467A KTU (Low-Voltage Monitor Circuit)

2.08 The 467A KTU (Fig. 12) is a 4-inch, 18-pin unit that monitors the -24 volt supply for a low-voltage condition. If there is a low-voltage condition, a light emitting diode (LED) will light and will remain lighted until the reset button is depressed. The circuit is factory-adjusted to indicate a voltage below 19 volts but may be adjusted to indicate a voltage below 17 to 21 volts by a potentiometer provided by the circuit.

469A KTU (Lamp Extender Circuit)

2.09 The 469A KTU (Fig. 13) is a 4-inch, 18-pin unit that provides current to line lamp multiples when they exceed current capacity of the 400-type KTU. The 469A KTU can drive up to twenty lamps, has a current drain itself equivalent to one lamp, and will mount in connectors reserved for 400-type line circuits. The 469A KTU can be used in the 620A modular panel, 583-, 584-, 597-, and 598-type panels, 513, 514, and 515 KSUs, and 69-type apparatus mountings.

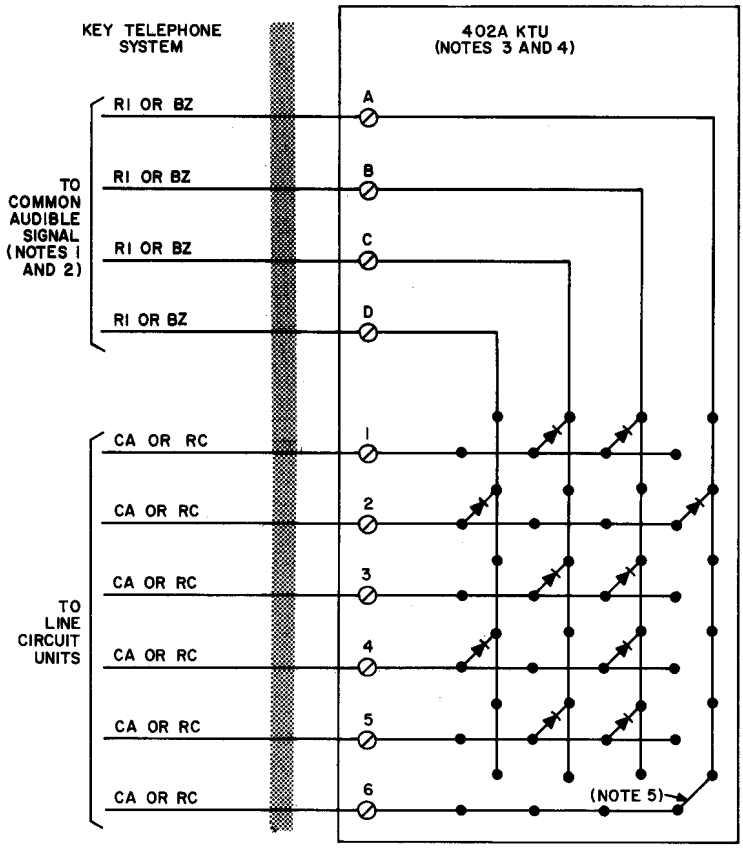

NOTES:
1. AUDIBLE SIGNALS MUST BE ALL RINGERS OR ALL AC BUZZERS. DO NOT USE RINGERS AND BUZZERS IN THE SAME CIRCUIT. DO NOT USE DC BUZZERS.
2. REMOVE CAPACITOR FROM RINGERS CONNECTED TO DIODE CIRCUIT.
3. FACTORY PROVIDED STRAPPING MUST BE REMOVED FROM SOME SYSTEMS BEFORE CONNECTING KTU.
4. ALL DIODES MUST BE POLARIZED IN SAME DIRECTION.
5. CONNECT 24-GAUGE BARE WIRE STRAP, INSTEAD OF DIODE, WHEN ONE COMMON RINGER WILL BE SIGNALED FROM A LINE CIRCUIT.

Fig. 3—Condensed Functional Schematic of 402A KTU (Diode Matrix)

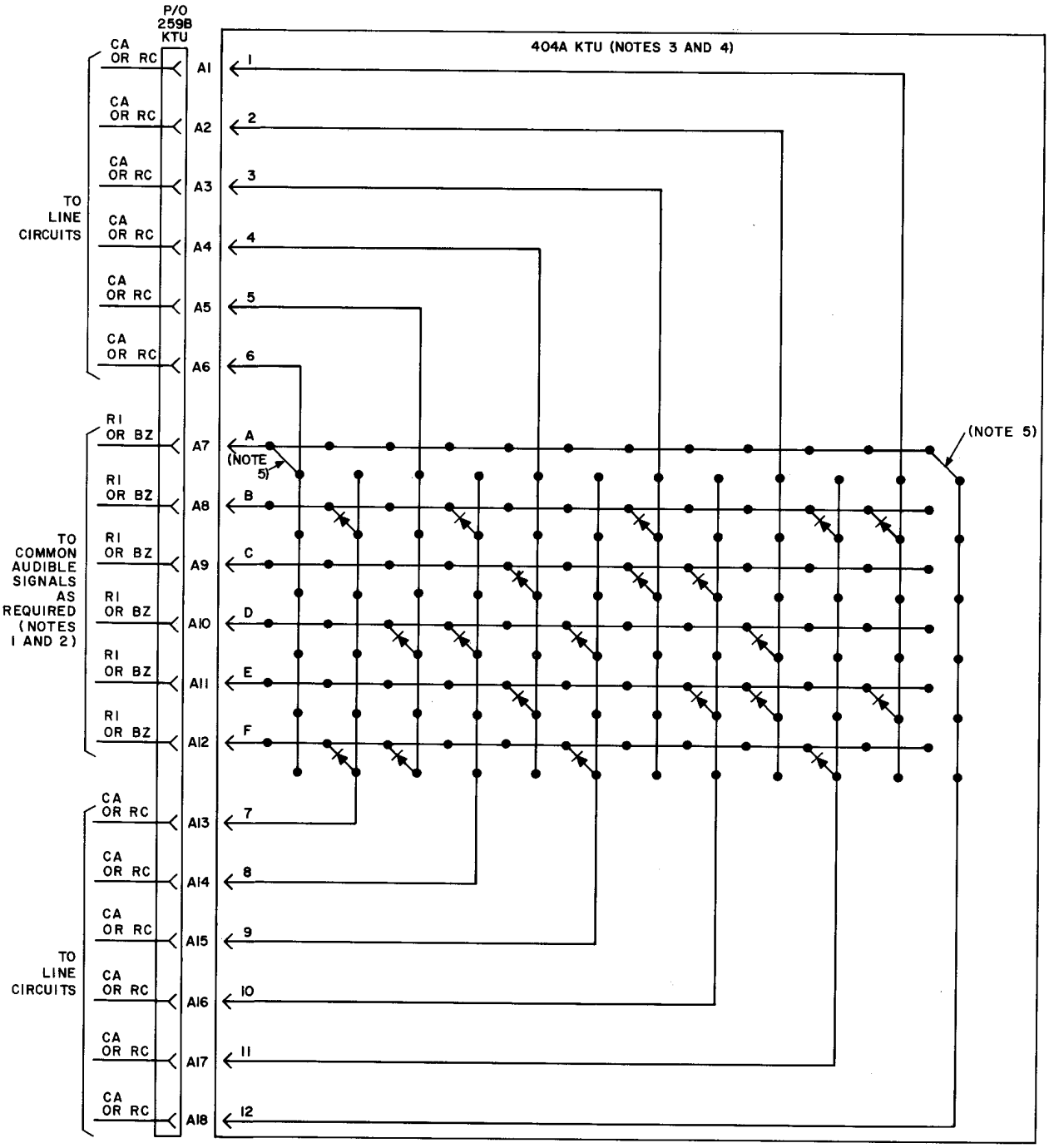

NOTES:

1. AUDIBLE SIGNALS MUST BE ALL RINGERS OR ALL AC BUZZERS. DO NOT USE RINGERS AND BUZZERS IN THE SAME DIODE CIRCUIT. DO NOT USE DC BUZZERS.
2. REMOVE CAPACITORS FROM THE RINGERS CONNECTED TO DIODE CIRCUIT.
3. FACTORY WIRING MUST BE REMOVED IN SOME SYSTEMS BEFORE CONNECTING THE 404A KTU.
4. ALL DIODES MUST BE POLARIZED IN THE SAME DIRECTION.
5. CONNECT A 24-GAUGE BARE WIRE STRAP, INSTEAD OF A DIODE, WHEN ONE COMMON RINGER WILL BE SIGNALED FROM A LINE CIRCUIT.

Fig. 4—Condensed Functional Schematic of 404A KTU (Diode Matrix)

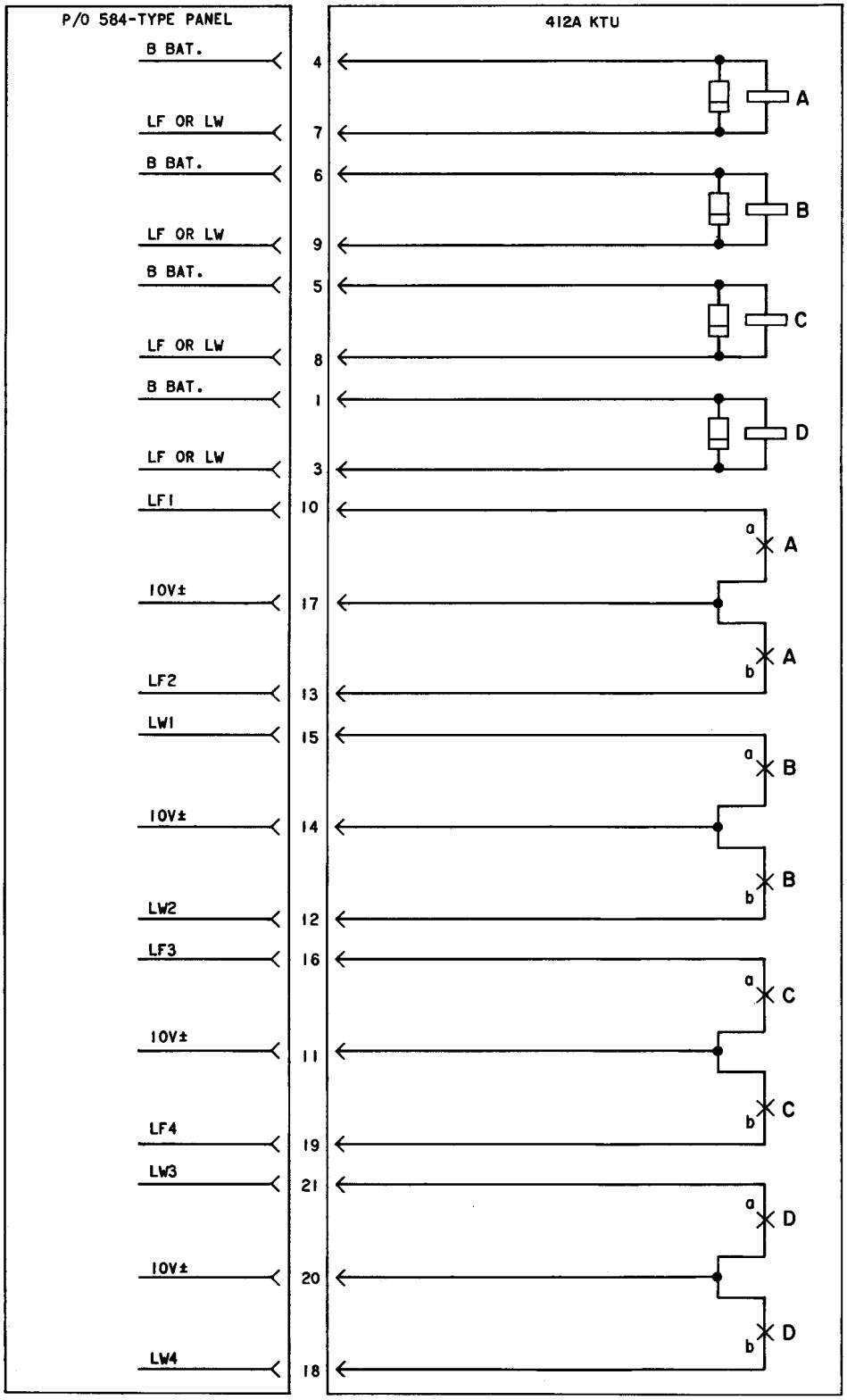

Fig. 5—Condensed Functional Schematic of 412A KTU (Auxiliary Relay Circuit)

NOTE:

REQUIRES A MOUNTING FACILITY EQUIPPED WITH AN 18-, 20-, OR 40-PIN CONNECTOR.

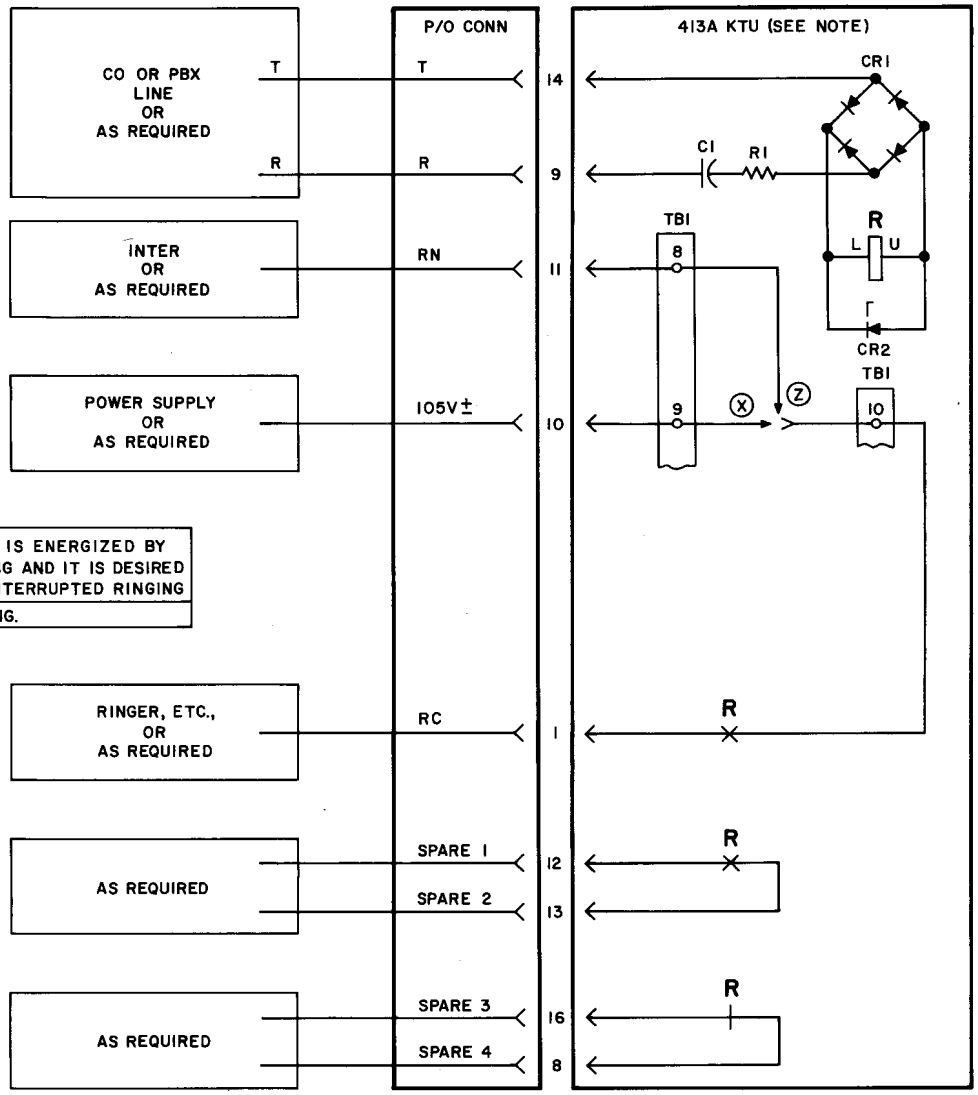

OPTIONS

Z	AUDIBLE SIGNALS	WHEN CIRCUIT IS ENERGIZED BY STEADY RINGING AND IT IS DESIRED TO CONTROL INTERRUPTED RINGING
X		STEADY RINGING.

Fig. 6—Condensed Functional Schematic of 413A KTU (Auxiliary Ringup Circuit)

NOTE:

REQUIRES A MOUNTING FACILITY EQUIPPED WITH A 40-PIN CONNECTOR.

OPTION

(W) REQUIRED WHEN 421A KTU IS USED FOR GENERAL PURPOSES.

* KTU WIRED FOR COMMON AUDIBLE WITH DIODE MATRIX OPTION.

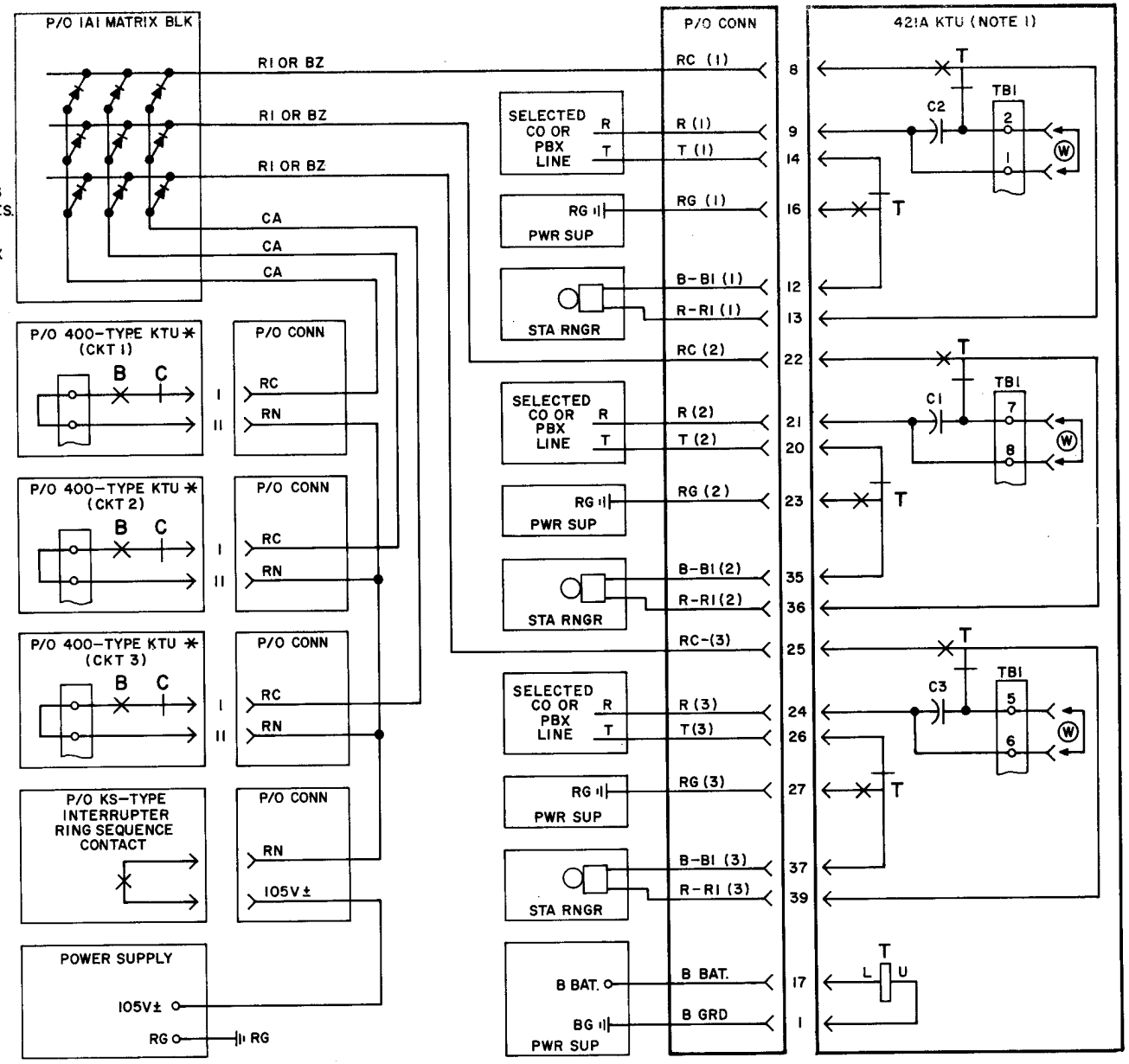

Fig. 7—Condensed Functional Schematic of 421A KTU (Wired for Power Failure Transfer)

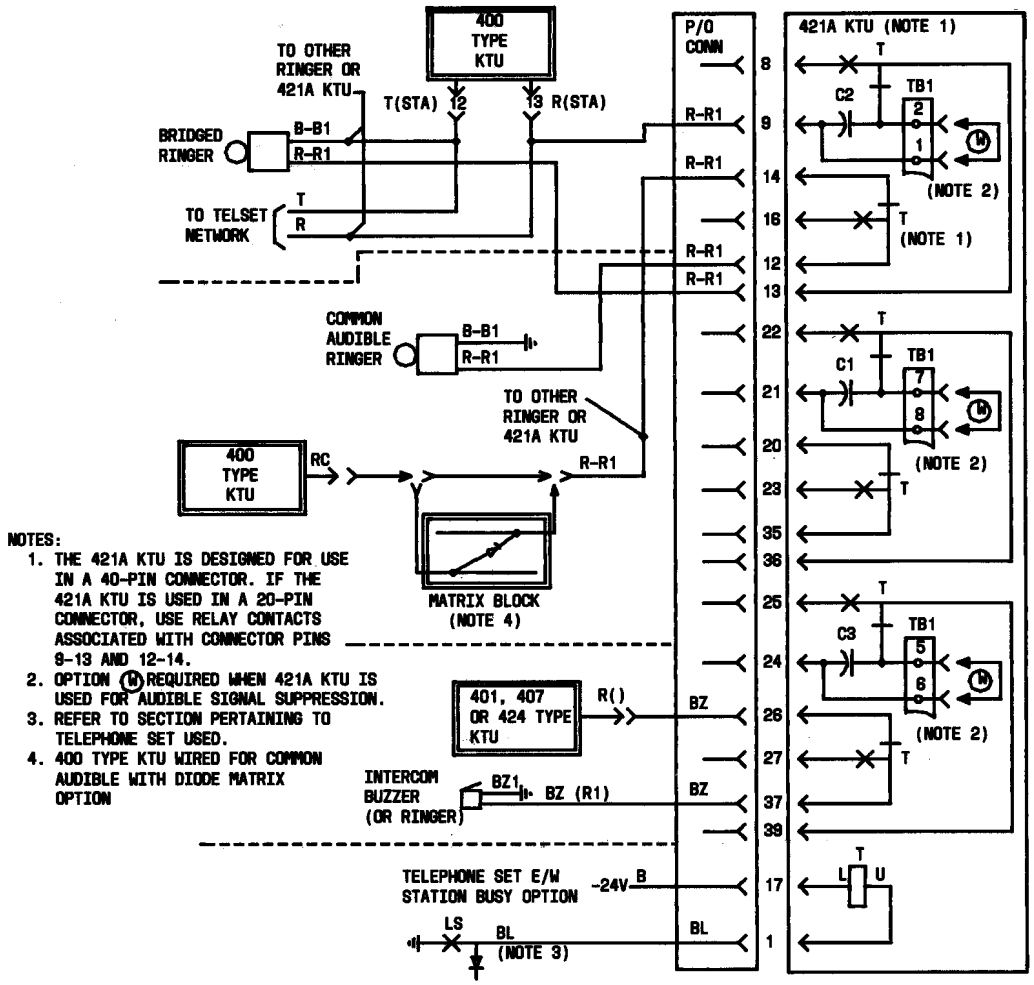

Fig. 8—Condensed Functional Schematic of 421A KTU (Wired for Audible Signal Suppression)

NOTE:
1. THE 421A KTU REQUIRES A MOUNTING FACILITY EQUIPPED WITH A 40-PIN CONNECTOR.
2. PROVIDE (W) OPTION AS REQUIRED.

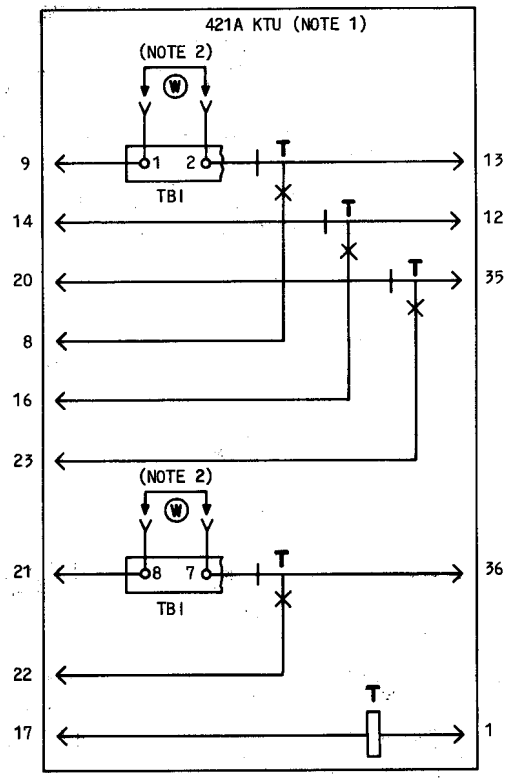

Fig. 9—Condensed Functional Schematic of 421A KTU (General Purpose Relay)

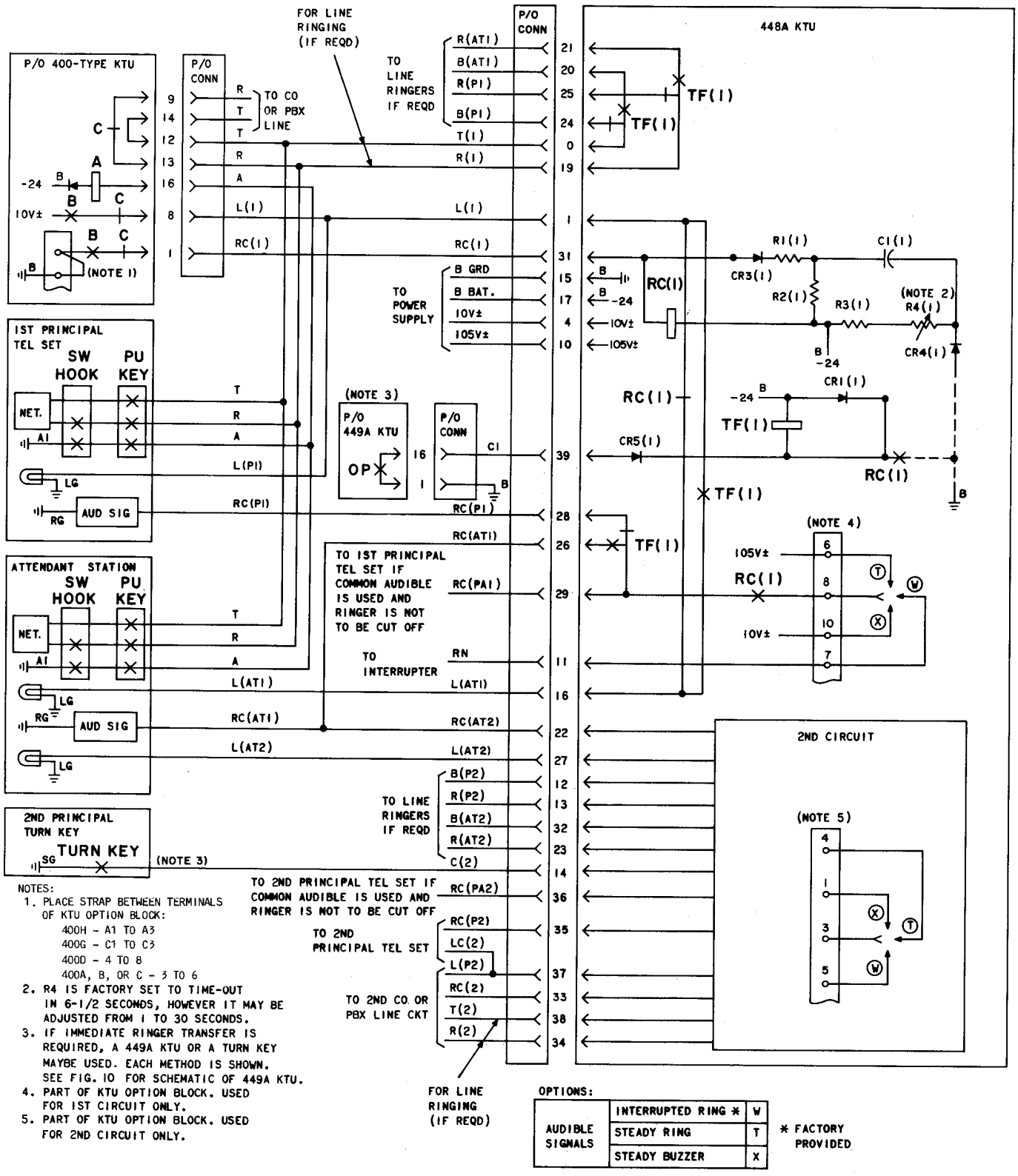

NOTES:

1. PLACE STRAP BETWEEN TERMINALS OF KTU OPTION BLOCK:
   400H - A1 TO A3
   400G - C1 TO C3
   400D - 4 TO 8
   400A, B, OR C - 3 TO 6
2. R4 IS FACTORY SET TO TIME-OUT IN 6-1/2 SECONDS, HOWEVER IT MAY BE ADJUSTED FROM 1 TO 30 SECONDS.
3. IF IMMEDIATE RINGER TRANSFER IS REQUIRED, A 449A KTU OR A TURN KEY MAYBE USED. EACH METHOD IS SHOWN. SEE FIG. 10 FOR SCHEMATIC OF 449A KTU.
4. PART OF KTU OPTION BLOCK. USED FOR 1ST CIRCUIT ONLY.
5. PART OF KTU OPTION BLOCK. USED FOR 2ND CIRCUIT ONLY.

Fig. 10—Condensed Functional Schematic of 448A KTU (Variable Delay Timer Circuit)

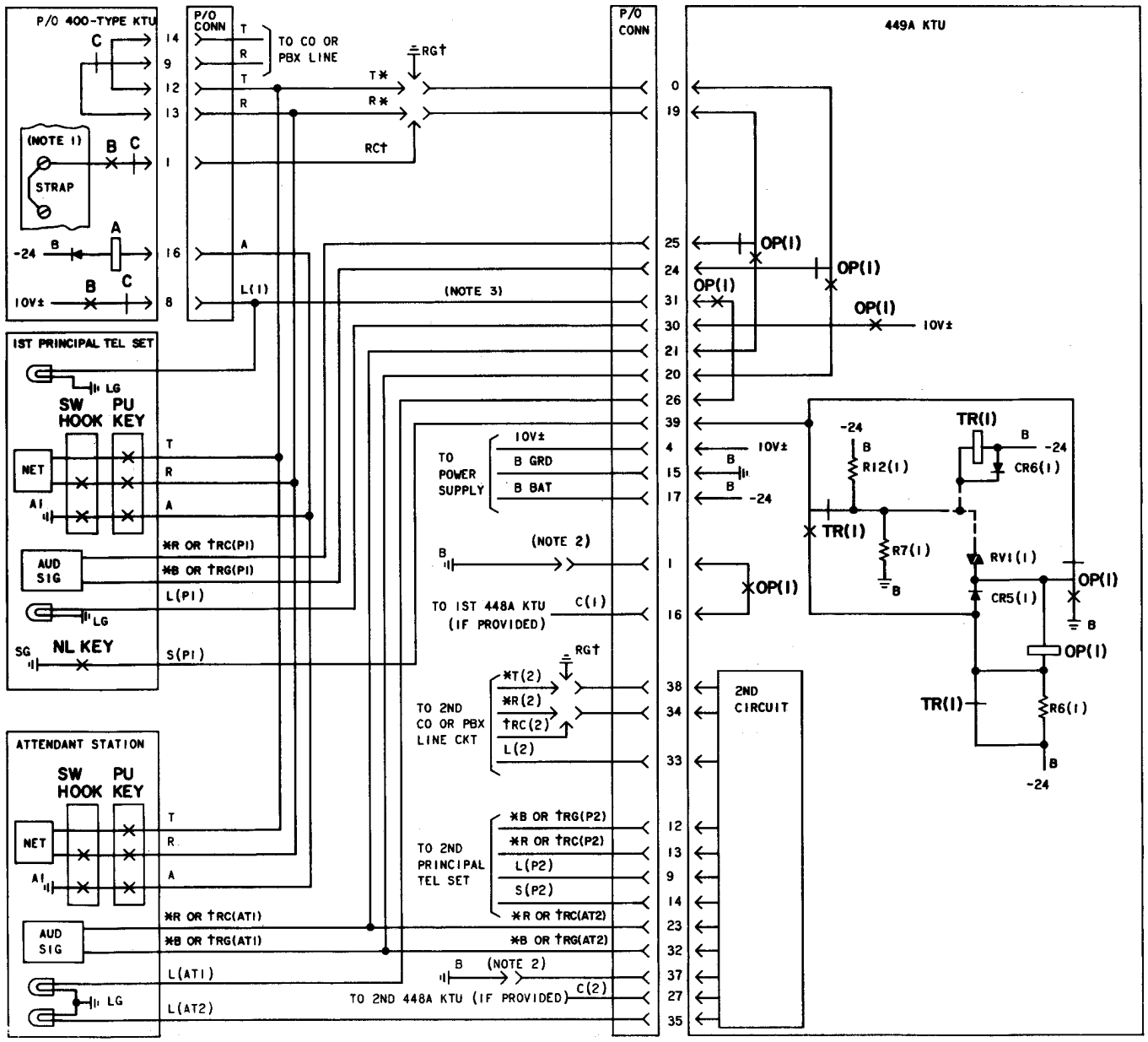

* FOR LINE RINGING
† FOR COMMON AUDIBLE RINGING

NOTES:

1. WHEN USING COMMON AUDIBLE RINGING, PLACE STRAP BETWEEN TERMINALS OF KTU OPTION BLOCK: 400H - A2 TO A3, 400G - C2 TO C3, 400D - 5 TO 8, 400A, B, OR C - 5 TO 6.
2. CONNECT B GRD ONLY IF 448A KTU IS PROVIDED. IF 448A KTU IS PROVIDED, NONE OF THE RINGER CONNECTIONS SHOWN ARE REQUIRED.
3. THE ATTENDANT LAMP WILL BE CONTROLLED BY THE 448A KTU.

Fig. 11—Condensed Functional Schematic of 449A KTU (Immediate Transfer Control Circuit)

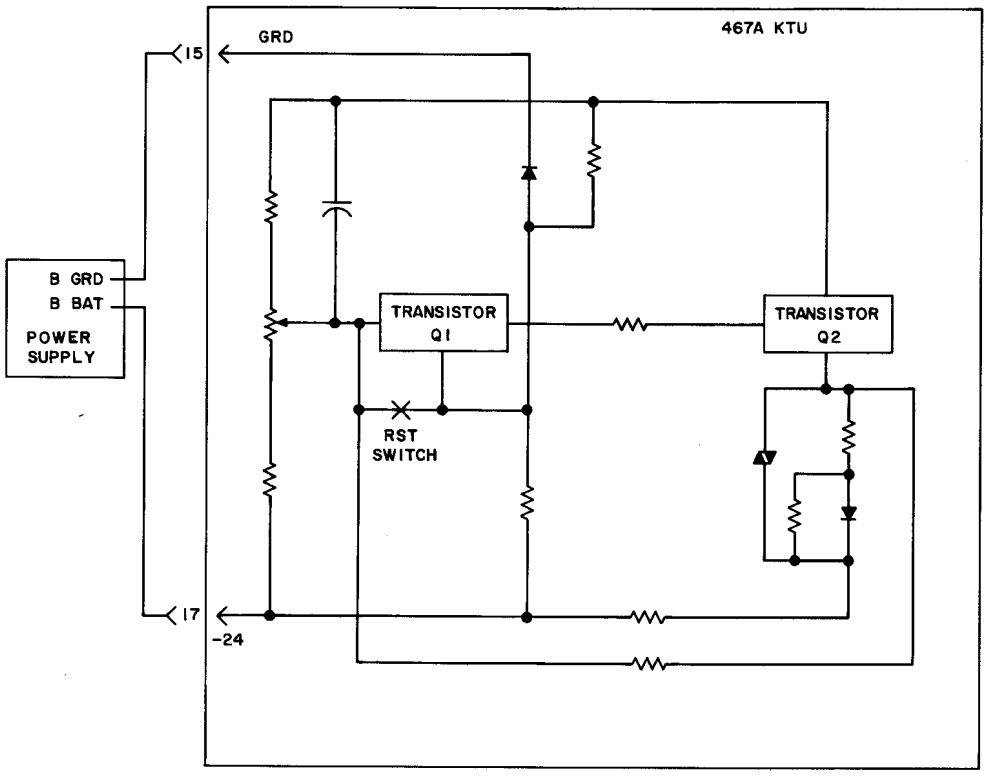

Fig. 12—Condensed Functional Schematic of 467A KTU (Low-Voltage Monitor Circuit)

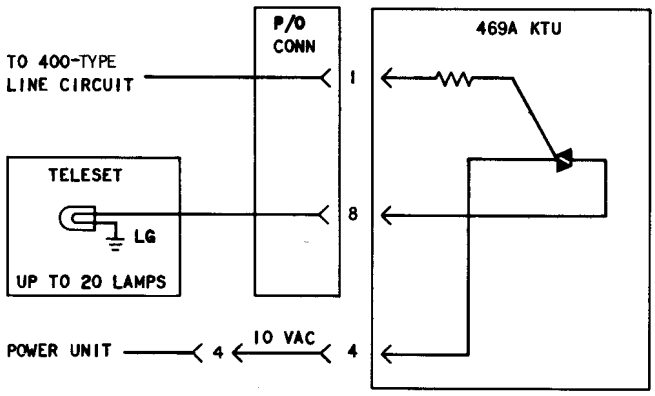

Fig. 13—Condensed Functional Schematic of 469A KTU (Lamp Extender Circuit)