Lucent Technologies
Bell Labs Innovations

PARTNER® Advanced Communications System

Release 1.0
Installation

518-456-052
Comcode 107915951
Issue 1
January 1997

Copyright © 1997 Lucent Technologies
All Rights Reserved
Printed in U.S.A.

Lucent Technologies 518-456-052
Issue 1
January 1997

Notice

Every effort was made to ensure that the information in this book was complete and accurate at the time of printing. However, information is subject to change.

Federal Communications Commission (FCC) Interference Notice

This equipment has been tested and found to comply with the limits of a Class A or Class B digital device, pursuant to Part 15 of FCC rules. For additional FCC information, see Appendix C of the *PARTNER Advanced Communications System Programming and Use* guide.

Canadian Emmissions Requirements

This digital apparatus does not exceed the Class A or Class B limits for radio noise emissions from digital apparatus set out in the Radio Interference Regulations of the Industry Canada (IC). For additional IC information, see Appendix C of the *PARTNER Advanced Communications System Programming and Use* guide.

Le present appareil numerique n'emet pas de bruits radioelectriques depassant les limites applicables aux appareils numeriques de la classe A ou de la classe B prescrites dans le Reglement sur le brouillage radioelectrique edicte par le ministere des Industrie Canada. Vous trouverez des renseignements complémitaires à la annexe C de *PARTNER Advanced Communications System Programming and Use* manuel.

Security

Toll fraud, the unauthorized use of your telecommunications system by an unauthorized party (for example, persons other than your company's employees, agents, subcontractors, or persons working on your company's behalf) can result in substantial additional charges for your telecommunications services. You are responsible for the security of your system. There may be a risk of toll fraud associated with your telecommunications system. You are responsible for programming and configuring your equipment to prevent unauthorized use. Your system manager should read all documents provided with this product to fully understand the features that can introduce the risk of toll fraud and the steps that can be taken to reduce that risk. Lucent Technologies does not warrant that this product is immune from or will prevent unauthorized use of common-carrier telecommunication services or facilities accessed through or connected to it. Lucent Technologies will not be responsible for any charges that result from such unauthorized use. If you suspect you are being victimized by toll fraud and you need technical support or assistance, call the BCS National Service Center at 1 800 628-2888.

Trademarks

Magic on Hold, MLS-34D, MLS-18D, MLS-12D, MLS-12, MLS-6, PARTNER, PARTNER MAIL, PARTNER MAIL VS, and SYSTIMAX are registered trademarks of Lucent Technologies. Lucent Technologies and TransTalk are trademarks of Lucent Technologies. Phillips is a registered trademark of Phillips Screw Company.

Warranty

Lucent Technologies provides a limited warranty for this product. See Appendix B of the *PARTNER Advanced Communications System Programming and Use* guide.

Ordering Information

The order number for this book is 518-456-052. To order additional books, call 1 800 457-1235 in the continental U.S. or 1 317 361-5353 outside the continental U.S. For information about ordering other system reference materials, replacement parts, accessories,and other compatible equipment, see "Product Ordering Information" in Appendix B of the *PARTNER Advanced Communications System Programming and Use* guide.

Support Telephone Number

In the continental U.S., Lucent Technologies provides a toll-free customer hotline 24 hours a day. Call the hotline at **1 800 628-2888** or your Lucent Technologies Authorized Dealer if you need assistance when installing your system. Consultation charges may apply.

Outside the continental U.S., contact your Lucent Technologies Representative or local Authorized Dealer.

Installing the Hardware

Contents

Important Safety Instructions ii

Additional Safety Instructions for Installation Personnel ii

Overview 1

An Example System Setup 2

Required Parts 4

Installation Guidelines 5

- Telephones and Devices 5
- Combination Extensions 6

Installation Procedures 8

- Wall-Mounting a Stand-Alone PARTNER ACS Processor Module 8
- Wall-Mounting a 2-Slot Carrier and Modules 9
- Wall-Mounting a 5-Slot Carrier and Modules 11
- Inserting Batteries in the PARTNER ACS Processor Module 12
- Powering Up the System 14
- Connecting Lines and Extensions 16
- Connecting Caller ID Display Units 18
- Assembling System Phones 19
- Connecting and Testing Telephones 21
- Connecting Contact Closure, Call Reporting (SMDR), Paging, and Music-On-Hold Devices 22
- Connecting a PARTNER-CA48 Intercom Autodialer 24

Equipment Upgrades 25

- Adding New Modules 25
- Replacing System Modules 27
- Inserting or Removing a PC Card 32

Specifications 34

Important Safety Instructions

The following list provides basic safety precautions that should always be followed when using your telephone equipment:

1. **Read and understand all instructions.**
2. **Follow all warnings and instructions marked on the product.**
3. **Unplug all telephone connections before cleaning. DO NOT use liquid cleaners or aerosol cleaners. Use a damp cloth for cleaning.**
4. **This product should be serviced by (or taken to) a qualified repair center when service or repair work is required.**
5. **DO NOT use this product near water, for example, in a wet basement location.**
6. **DO NOT place this product on an unstable cart, stand, or table.**
7. **Never push objects of any kind into slots or openings as they may touch dangerous voltage points or short out parts that could result in a risk of fire or electric shock. Never spill liquid of any kind on the product.**
8. **Avoid using the telephone during an electrical storm. There may be a remote risk of electric shock from lightning.**
9. **DO NOT use the telephone to report a gas leak in the vicinity of the leak.**
10. **The product is provided with a three-wire grounding type plug as a safety feature. DO NOT defeat the safety purpose of the grounding type plug. DO NOT staple or otherwise attach the power supply cord to building surfaces.**

CAUTION:
DO NOT block or cover the ventilation slots and openings. They prevent the product from overheating. DO NOT place the product in a separate enclosure unless proper ventilation is provided. DO NOT place the product flat on a surface. The control unit must be wall-mounted.

Additional Safety Instructions for Installation Personnel

1. **DO NOT install telephone wiring during a lightning storm.**
2. **DO NOT install telephone jacks in a wet location unless the jack is specifically designed for wet locations.**
3. **Never touch uninsulated telephone wires or terminals, unless the telephone line has been disconnected at the network interface.**
4. **Use caution when installing or modifying telephone lines.**
5. **The control unit must be securely wall mounted.**

CAUTION:
If any wiring from the extension jacks leaves the building premises, you must install Lucent Technologies™ IROB protectors (see "Requirements for Out-of-Building Extensions" on page 36.

CAUTION:
Use only Lucent Technologies-manufactured PARTNER modules in the PARTNER Advanced Communications System.

CAUTION:
Environmental and electrical conditions must meet the requirements as listed on page 36.

SAVE THESE INSTRUCTIONS

Installation

Overview

This guide explains how to install the PARTNER® Advanced Communications System (ACS). It begins with an example system setup, then shows the components you need to install the system and gives general guidelines to consider before installation. Next, it provides step-by-step instructions for connecting and testing the components for initial installation and upgrades. Finally, it lists important system specifications. Make sure that your installation meets all electrical and environmental requirements.

If your company already has modular jacks for all outside lines and extensions, you may be able to use the existing wiring to install the system hardware and connect telephones to the system yourself. To have a Lucent Technologies service technician install and customize your system or change existing wiring, call 1 800 247-7000 (in the continental U.S. only) or call your Lucent Technologies Representative or local Authorized Dealer.

After installation, refer to the *PARTNER Advanced Communications System Programming and Use* guide for programming instructions.

An Example System Setup

The next page shows a control unit with one PARTNER Advanced Communications System (ACS) processor module, two 206 modules and two 400 modules, giving the system a capacity of 15 outside lines and 20 extensions. Although your system may differ, this example will give you an idea of the types of equipment you can connect to it. In the example, system phones and industry-standard devices are connected to nine extensions. The circled numbers in the figure refer to items in the following list, which gives a brief description of the system's components.

Control Unit

The control unit consists of these components:

(1) **5-Slot Carrier.** The carrier channels power to the system and connects the system modules.

(2) **206 Modules.** Each 206 module has jacks for two lines and six extensions.

(3) **400 Modules.** Each 400 module provides four line jacks but no extensions. *Notice that the 400 modules are installed to the right of the 206 modules.*

(4) **PARTNER ACS Processor Module.** The processor module contains the software that provides the system's features, and has jacks for three lines and eight extensions. It also has CONTACT CLOSURE, SMDR, PAGE, and MUSIC ON HOLD jacks.

(5) **CONTACT CLOSURE Jack.** A Contact Closure Adjunct plugs directly into this modular jack. Up to two Contact Closure devices such as door locks can be wired to the Adjunct, and users at extensions can control the devices.

(6) **SMDR Jack.** A call reporting (or SMDR–Station Message Detail Recording) device connects directly to this jack. Lucent Technologies' Call Accounting Terminal serial printer and box are shown here.

(7) **PAGE Jack.** A loudspeaker paging system plugs directly into this modular jack. The system is compatible with any Lucent Technologies paging system.

(8) **Line Jacks.** The top two jacks on each 206 module, three jacks on the ACS module, and all four jacks on each 400 module, connect to outside telephone lines.

(9) **MUSIC ON HOLD Jack.** Lucent Technologies' Magic on Hold® is connected to this jack to provide customized music and messages for callers on hold. Other types of audio equipment (including a CD player, cassette player, or stereo receiver) can be connected using an audio cord with an RCA phono plug (not supplied).

If you use equipment that rebroadcasts music or other copyrighted materials, you are required to obtain a license. For more information, see "Music-on-Hold Audio Source" later in this guide.

(10) **Power LED.** The power LED lights when the module is receiving power.

(11) **Extension Jacks.** The bottom six jacks on each 206 module and the bottom eight jacks on the ACS module connect inside wiring for telephones and other telecommunications equipment.

(12) **Network Interface Jacks.** These jacks provide access to telephone lines from the local telephone company. Each outside line is connected to the system by plugging one end of the line cord into one of these jacks, and the other end into a line jack in the control unit.

Extensions

Various devices—including system phones and industry-standard devices—can be connected to the modular wall jacks. The modular wall jacks connect to the extension jacks in the control unit by way of the building's inside wiring.

(13) **Extension 10:** These devices are connected:

- **PARTNER-34D® Display Phone.** Typically, the receptionist at extension 10 has a PARTNER-34D display phone like the one shown here. The display shows the time, dialed numbers, the duration of calls, and programming messages.

  A display phone is required for system programming at extension 10 or 11, or both. You can use an 18-button display phone only if there are no 34-button phones in the system.
- **PARTNER-CA48 Call Assistant Intercom Autodialer.** An Intercom Autodialer is connected to the phone to dial extensions and transfer calls to them with one touch and to see which extensions are busy.
- **Standard Touch-Tone Phone.** During a power failure, the PARTNER-34D phone on extension 10 will not work, but the receptionist can use the standard phone to place and receive calls on line 1.

(14) **Extension 11: PARTNER-34D Display Phone.** Another PARTNER-34D is connected to programming extension 11. You can program the system from this extension, leaving the receptionist at extension 10 free to handle calls.

(15) **Extension 12: PARTNER-6 Phone and Answering Machine.** A PARTNER-6 phone and an answering machine are connected to this extension.

(16) **Extension 13: Standard Phone.** A standard phone (such as you might have in your home) is connected directly to the extension jack.

(17) **Extension 14: Doorphone.** A doorphone is installed at the building entrance. When someone presses the button on the doorphone, the designated extensions signal. (Any number of extensions can be designated as doorphone alert extensions. For this example, extension 16 is the doorphone alert extension.)

(18) **Extension 15: Bell.** A loud bell is connected directly to this extension jack. Any line programmed to ring on extension 15 activates the loud bell—to alert users of an incoming call in a large area, such as a warehouse.

(19) **Extension 16: PARTNER-18D Display Phone.** This phone has a display like the PARTNER-34D phone. For this example, this is the doorphone alert extension and the Contact Closure-enabled extension—when someone presses the doorphone button, this phone signals and the user can press a button on the phone to release the door lock.

(20) **Extension 17: Fax Machine and Standard Phone.** A fax machine and standard phone share this extension. This lets you have the use of another phone when the fax machine is idle. (You can use a system phone at another extension to monitor fax machine activity—see "Fax Management Feature" under "Using Fax Machines" in Chapter 4 of the *PARTNER Advanced Communications System Programming and Use* guide.)

(21) **Extension 18: MDW 9030P Pocketphone.** This wireless phone is lightweight and portable.

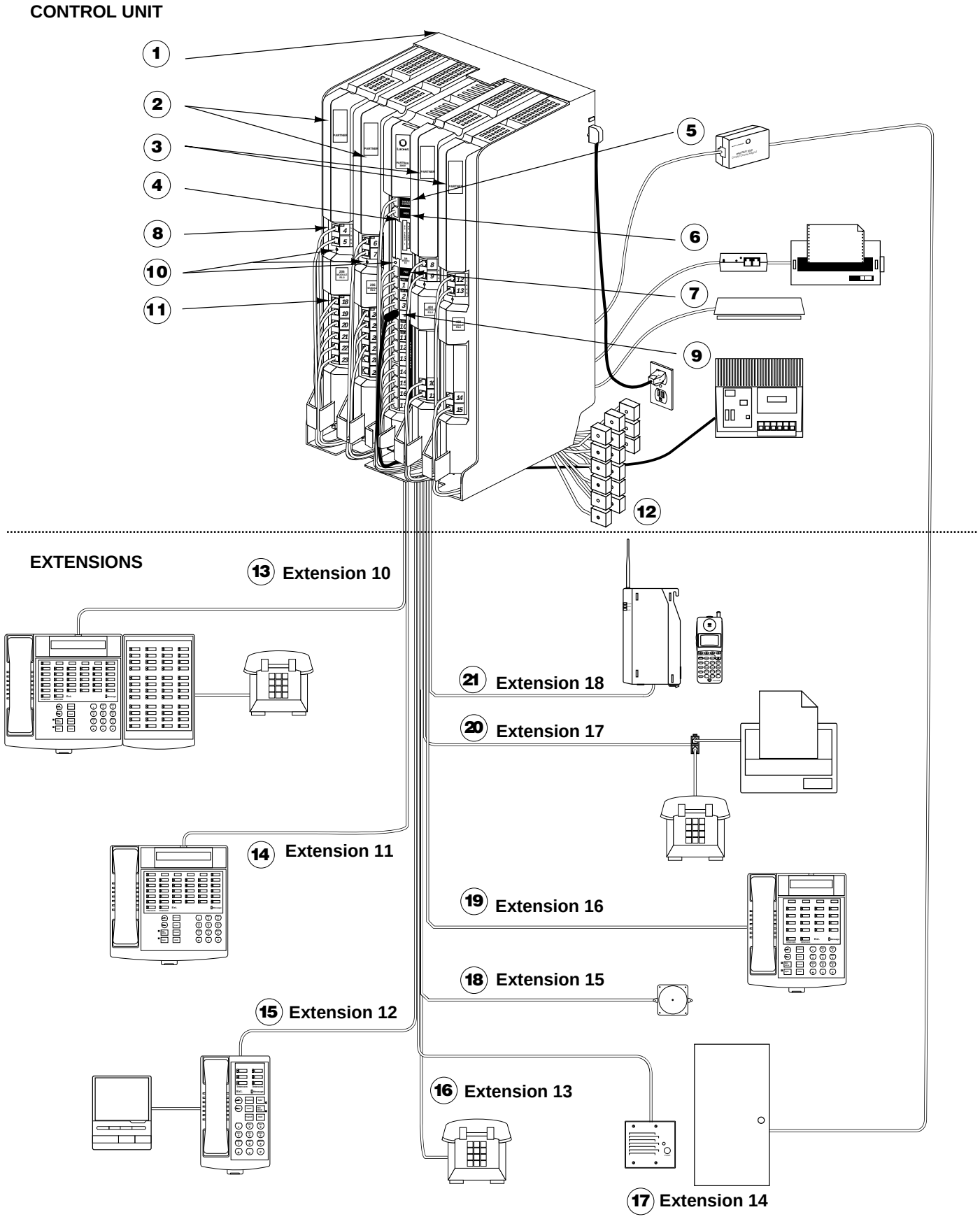
CONTROL UNIT
1
2
3
4
5
6
7
8
9
10
11
12
EXTENSIONS
13 Extension 10
14 Extension 11
15 Extension 12
16 Extension 13
17 Extension 14
18 Extension 15
19 Extension 16
20 Extension 17
21 Extension 18

Required Parts

You may have multiple system component packages; Figure 1 shows the package contents. Check your packages to be sure you have the parts shown here (if not, call for support as instructed on the inside front cover of this guide).

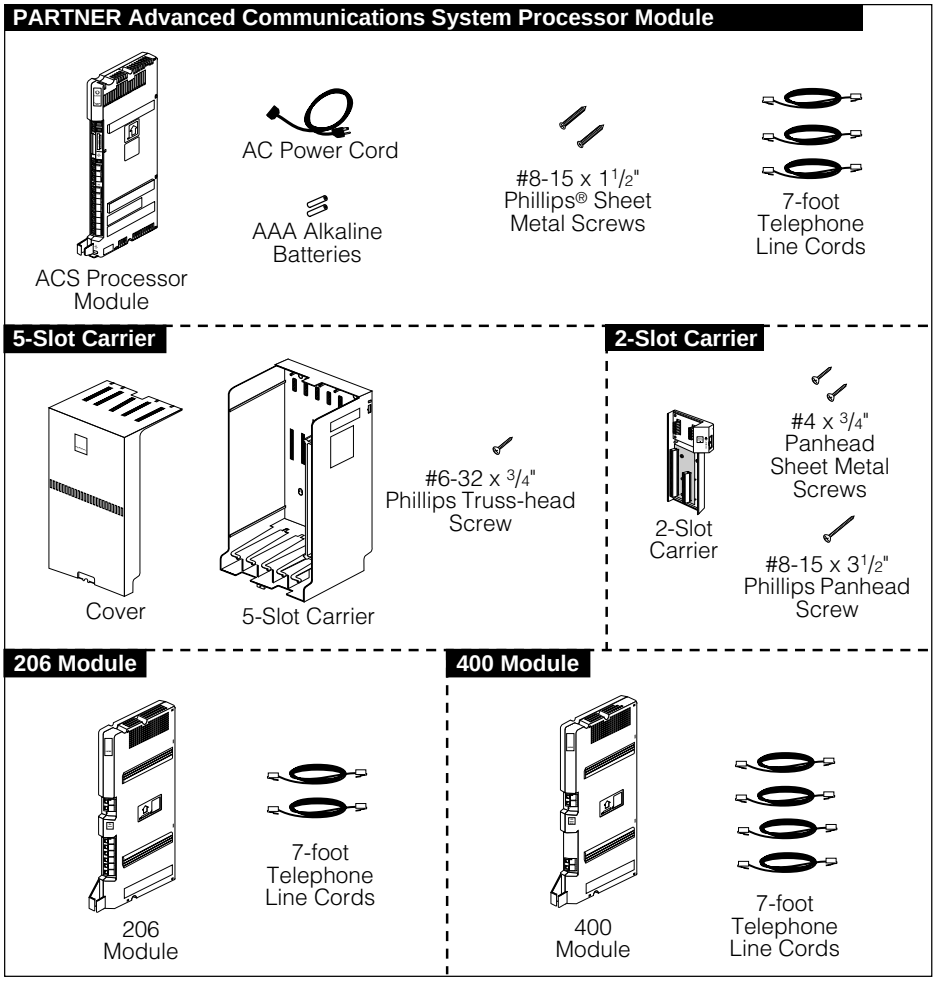

Figure 1. Required Parts

For a 5-Slot carrier, you will need to obtain four #12 screws of the appropriate type for the wall and weight of the control unit (a control unit with four 206 modules and a processor module weighs approximately 31 pounds or 14 kilograms).

In addition, if you need modular telephone cords to connect the extension jacks in the control unit to the modular connecting blocks for extensions in the equipment room, short telephone cords or wall plates to wall mount PARTNER-model phones, or a 355A/355AF adapter and D8W telephone cord to connect a call reporting device, order them before installation. Refer to "Product Ordering Information" in Appendix B of the *PARTNER Advanced Communications System Programming and Use* guide for ordering instructions.

The PARTNER ACS processor module and the 206EC and 400EC modules support the Caller ID feature. These modules are required to provide Caller ID information on system display phones. You must subscribe to Caller ID service from your local telephone company (if it is available), and connect any lines associated with this service to the line jacks on the processor module, the 206EC module, or the 400EC module. Hereafter, references in this guide to 206 modules include 206E, 206EC, and all 206 modules used with previous releases of the product. Similarly, references to 400 modules include 400E, 400EC, and all 400 modules used with previous releases of the product.

NOTE:
A system display phone is *required* for programming at extension 10 and/or 11. If you have any 34-button phones in the system, you must use a 34-button display phone to program since an 18-button phone cannot be used to program a 34-button phone. Also, if your system has both PARTNER-model and MLS-model phones, it is recommended that you use a PARTNER-model display phone at the programming extension.

Installation Guidelines

Telephones and Devices

You can connect the following telephones and devices to the system:

- **PARTNER-model, MLS-model, MDC 9000, and TransTalk™ 9000-series System Phones.** System phones require at least two-pair wiring and are compatible with Lucent Technologies 4-pair SYSTIMAX® wiring.
- **Call Assistant Intercom Autodialers with Busy Indication (PARTNER-CA48 for PARTNER-model phones or MLS-CA24 for MLS-model phones).** You can connect an Intercom Autodialer to the system phones at extension 10 and 11. The Intercom Autodialer connects to the system phone using an adapter that is shipped with the autodialer.
- **Industry-Standard Devices.** Industry-standard devices (including standard phones) require one-pair mounting cords; Lucent Technologies D2R mounting cords are recommended.
  - **Standard Phones.** Connect standard touch-tone or rotary dial phones to the system for:
    - **Power Failure Operation.** During a power failure, system phones will not work because they require power to operate. However, if you connect standard phones to the first two extensions on the PARTNER ACS processor module, users can place and answer outside calls on the first two lines. If you connect a standard phone to the first extension on each 206 module, users can place and answer outside calls on the first line of each 206 module. You can connect a standard phone either alone or combined with a system phone. For more information, see “Combination Extensions” on the next page.

- **Hotlines.** A hotline extension should be connected to a standard phone, rather than a system telephone, but can ring any type of phone. An internal hotline phone can also be set up to ring the paging system, so announcements can be made over the loudspeaker. Do not connect a hotline phone to extension 10, 11, 18, 19, 24, 25, 30, 31, 36, or 37, to keep these extensions available for power failure use.

For message waiting capability, you must connect standard phones with LED-compatible message-waiting lights to a PARTNER ACS processor module or Release 3.1 (R3.1) or later 206 modules. This message-waiting capability does not work with standard phones with *neon-type* message-waiting lights.

- **Auxiliary Equipment.** There are a variety of ways to set up fax machines, modems, and answering machines to work with the system. See Chapter 4 in the *PARTNER Advanced Communications System Programming and Use* guide for advice on using this equipment. To connect a telephone and a standard device on the same extension, see "Combination Extensions" below.

- **Doorphones.** You can connect up to two doorphones to the system. Do not connect doorphones to extension 10, 11, 18, 19, 24, 25, 30, 31, 36, or 37.
- **Contact Closures.** You can connect up to two Contact Closure devices such as door locks to the Contact Closure Adjunct so that the devices can be activated from an extension on a user's desk.
- **Voice Messaging Systems.** The system supports either of the following voice messaging systems:
  - The **PARTNER MAIL VS® System.** This device, which physically resembles a 206 module, resides in the control unit.
  - The **PARTNER MAIL® System.** This device connects to the system through extension jacks. Do not connect PARTNER MAIL to extension 10, 11, 18, 19, 24, 25, 30, 31, 36, or 37 to keep these extensions available for power failure use.
- **Call Reporting Devices.** You can connect either a serial printer or a call accounting device, such as Lucent Technologies Call Accounting Terminal, to the SMDR jack on the processor module to record and/or analyze call activity.
- **In-Range Out-of-Building Protectors.** Installing phones or other standard devices (such as a doorphone) in a location other than the building where the control unit is installed requires Lucent Technologies In-Range Out-of-Building (IROB) protectors, to prevent damage from lightning. (IROBs must be installed by a qualified technician.)

Combination Extensions

You can connect a standard device (such as a standard phone or an answering machine) on an extension by itself, or so that it shares an extension with another piece of equipment (either another standard device or a system phone). An

extension with two devices connected to it is called a *combination extension*. (If you combine a standard phone and a system phone on one extension, you may want to turn off the standard phone's ringer during normal use.)

You cannot install two system phones on the same extension, and the combined REN (Ringer Equivalence Number) of two devices on one extension cannot exceed 2.0. (The REN for a system phone is 0.0.)

NOTE:
The Call Assistant Intercom Autodialer is not regarded as a standard device. This means you *can* connect a standard device to a system phone that also has an Intercom Autodialer installed.

PARTNER-model system phones have a built-in auxiliary jack so you can connect a standard device directly to the phone without using a bridging adapter—see "Using A Direct Connection," below. If your system phone does not have a built-in auxiliary jack or if you want to connect two standard devices together, you must use a Lucent Technologies 267F2 Bridging Adapter— see "Using a Bridging Adapter," below.

Using A Direct Connection

Figure 2 shows how to connect a standard device directly to a system phone, using the phone's built-in auxiliary jack. (Figure 2 is for illustration purposes only; the placement of the jacks on your phone may differ.)

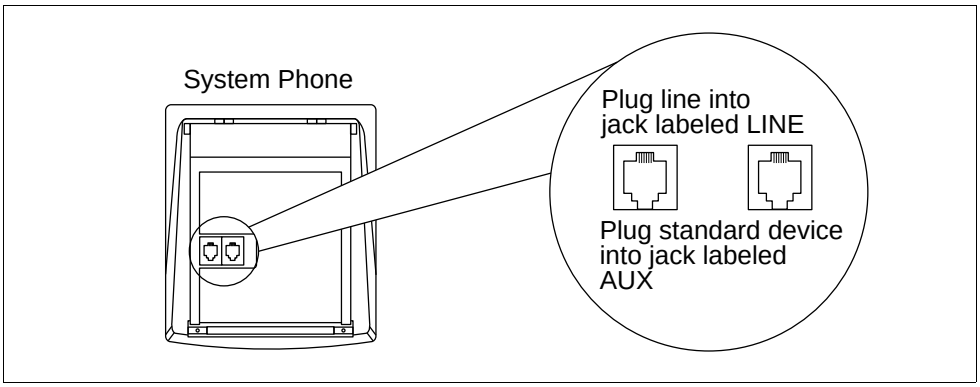

Figure 2. Combination Extension Using Direct Connection

Using a Bridging Adapter

Figure 3 shows how to connect a system phone and a standard device or two standard devices using a (separately orderable) Lucent Technologies 267F2 Bridging Adapter.

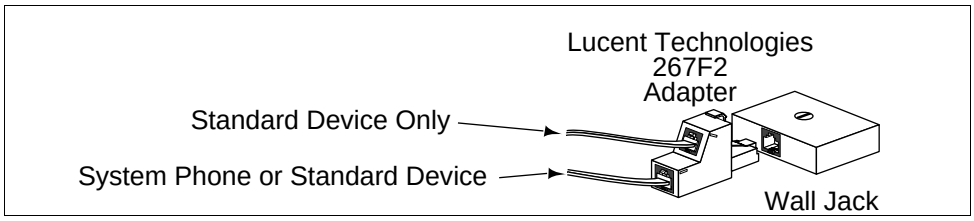

Figure 3. Combination Extension Using Bridging Adapter

Installation Procedures

Before installing the system, be sure you read the safety instructions on page ii.

WARNING:
There are no customer-serviceable components inside the system modules or carrier. There are hazardous voltages within that can cause severe or fatal personal injury. DO NOT OPEN THE MODULES.

The PARTNER Advanced Communications System can be installed in one of three configurations:

- Stand-alone PARTNER ACS processor module.
- 2-Slot carrier, which can hold up to two modules.
- 5-Slot carrier, which can hold up to five modules and includes a cover.

The stand-alone processor module or a carrier and its modules are referred to as the *control unit*. The control unit must always be wall-mounted. See the following sections for wall-mounting instructions.

Wall-Mounting a Stand-Alone PARTNER ACS Processor Module

Install the PARTNER ACS processor module within 5 feet (1.5 meters) of a properly grounded wall outlet (not controlled by a switch) and the network interface jacks.

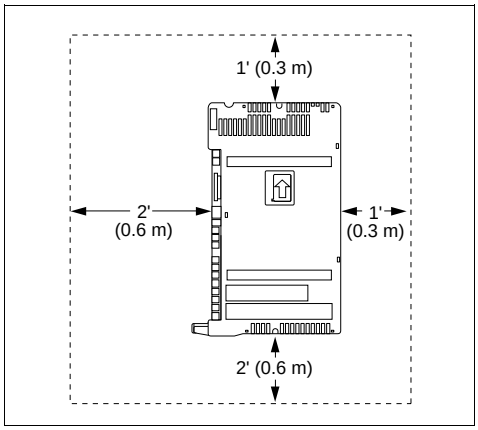

1 A) Hold the PARTNER ACS processor module against the wall with the line and extension jacks facing left.

B) Leave at least 1 foot (0.3 meter) clearance at the front, top, and right side, and at least 2 feet (0.6 meter) at the bottom and left side. This allows you to access the jacks or expand the system with another module, and ensures adequate ventilation.

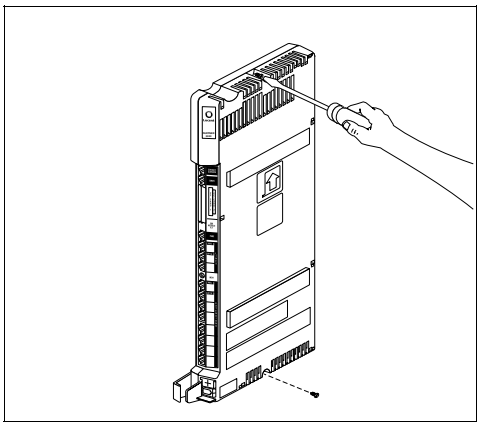

2 A) Insert one of the #8 sheet metal screws into the screw hole at the top of the module.

B) If you are not installing a second module, insert the other #8 sheet metal screw into the screw hole at the bottom of the module. If you are installing a second module, do not insert the bottom screw at this time.

C) Tighten the screw(s) until the mounting tracks are snug against the wall. *There must be a 3/8" (1 cm) gap between the wall and the rest of the module.* Do not overtighten the screw(s)—the module will warp and fail to operate.

3 A) Label the line and extension jacks as shown.

B) If you are installing a two-module system, continue with “Wall-Mounting a 2-Slot Carrier and Modules;” otherwise, skip to “Inserting Batteries in the PARTNER ACS Processor Module.”

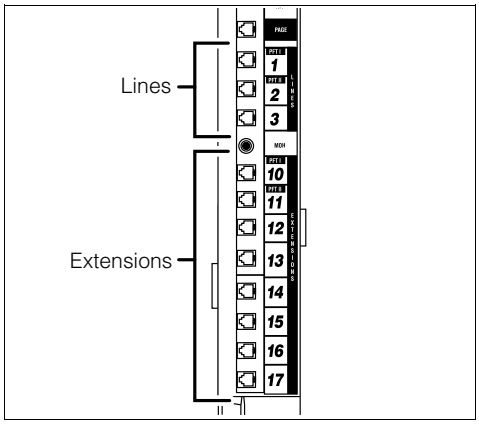

Wall-Mounting a 2-Slot Carrier and Modules

To wall-mount a 2-Slot carrier, first follow the instructions in “Wall-Mounting a Stand-Alone PARTNER ACS Processor Module.”

IMPORTANT:
If you are adding a PARTNER ACS processor module to an existing system, you must install the ACS processor module as the first module. See “Wall-Mounting a Stand-Alone PARTNER ACS Processor Module” on the previous page for instructions.

You can install a 206, 400, or PARTNER MAIL VS module as the second module, using the following steps:

1 Remove the clear, plastic protector from the connector on the right side of the wall-mounted PARTNER ACS processor module by grasping the tabs on the ends of the protector and lifting.

2 If this is an upgrade to an existing single-module system, remove the #8 sheet metal screw from the bottom of the existing PARTNER ACS processor module.

3 Remove the clear, plastic protector from the connector on the right side of the second module.

4 Slide the second module onto the first module, making sure the pairs of mounting tracks interlock, as shown in the side view.

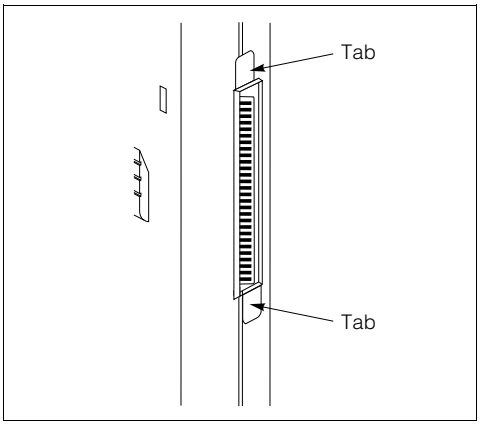

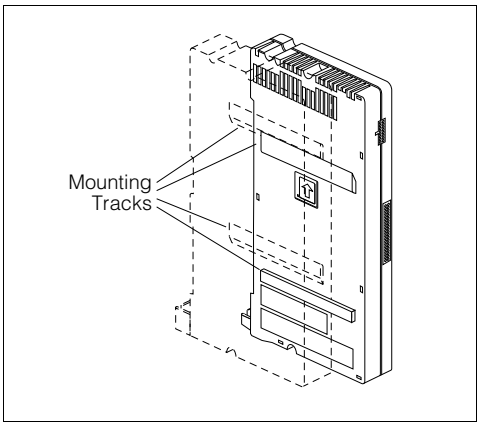

5 Attach the 2-Slot carrier to the top right side of the two modules. Align the carrier carefully and then push firmly until the connectors on the modules snap into the carrier.

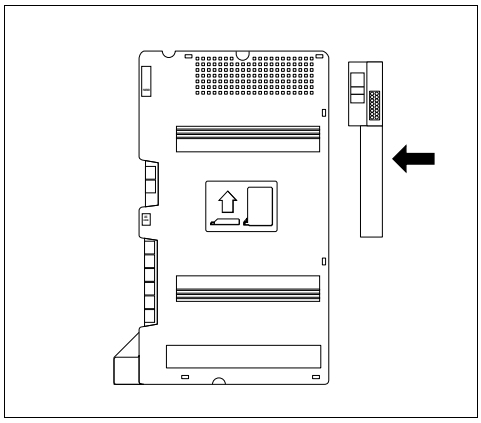

6 Fasten the carrier to the modules using the two #4 screws included with the carrier.

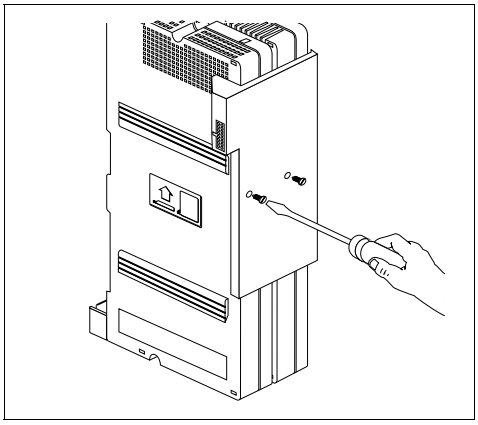

7 Insert the 3-1/2" #8 screw into the bottom of the modules. Tighten the screw until the mounting tracks of the PARTNER ACS processor module are flush against the wall and there is a 3/8" (1 cm.) gap between the wall and the rest of the PARTNER ACS module. Do not overtighten—the modules will warp and fail to operate.

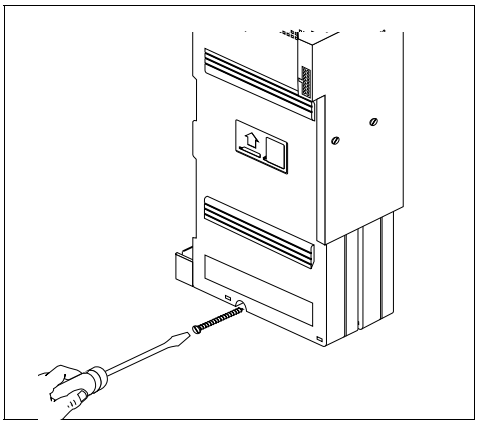

8 Label the lines and extension jacks as shown. (If your second module is a 400 module, you will have lines 1–7 but only extensions 10–17.)

9 Skip to “Inserting Batteries in the PARTNER ACS Processor Module.”

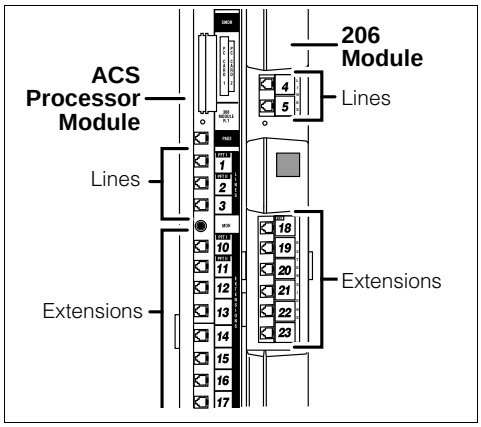

Wall-Mounting a 5-Slot Carrier and Modules

Install the 5-Slot carrier within 5 feet (1.5 meters) of a properly grounded wall outlet (not controlled by a switch) and the network interface jacks. In addition, when you mount the carrier on the wall, leave at least 1 foot (0.3 meter) of clearance at the top and sides, and 2 feet (0.6 meter) at the front and bottom to ensure proper ventilation.

NOTE:
The location of each module within the carrier is important; place them as instructed in the following procedure.

1

A) Hold the 5-Slot carrier against the wall.

B) Using the four screw keyholes in the carrier as a template, mark screw locations on the wall.

C) Start four #12 screws, leaving the screw heads extending approximately 1/4" (.64 cm) from the wall.

D) Slip the carrier onto the screws, then tighten them. Do not overtighten them—the carrier will warp.

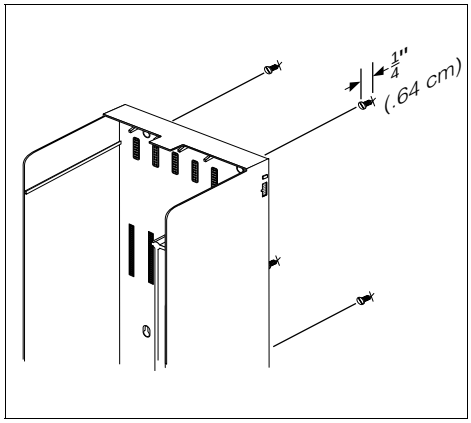

2

Before installing any modules, make sure the clear, plastic protector has been removed from the connector area on the rear of each module. To remove the protector, grasp the tabs on the ends of the protector and lift.

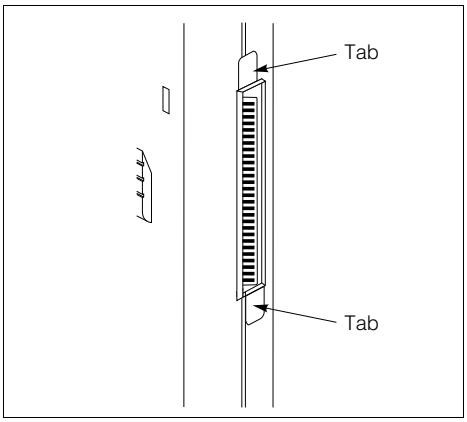

3

A) Slide the PARTNER ACS processor module into the ***center*** slot of the carrier.

B) Align the module carefully. Then push slowly but firmly in the center of the module until the connectors on the module lock into place, and the module is attached to the rear of the carrier. Do not force the module. If it does not insert easily, remove the module, clear any obstruction, and reinsert it.

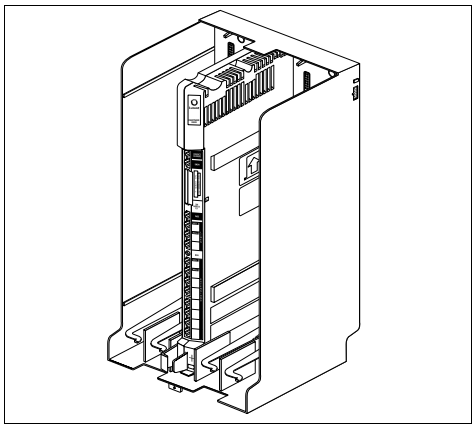

4 A) Slide the first 206 module into the ***leftmost*** *slot of the carrier.*

B) From left to right, install 206 modules, then any 400 (or 200) modules. The 400 modules should *always* be to the right of all 206 modules. Also, you must install 206EC and/or 400EC modules for any lines with Caller ID service.

Do not force the modules. If a module does not insert easily, remove it, clear any obstruction, then reinsert it by pushing slowly, but firmly in the center of the module.

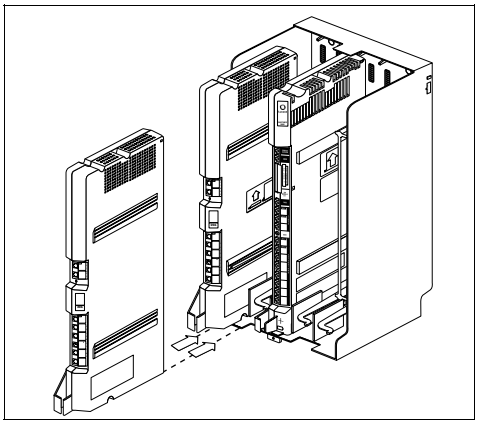

5 Continue with "Inserting Batteries in the PARTNER ACS Processor Module."

Inserting Batteries in the PARTNER ACS Processor Module

The PARTNER ACS processor module uses two user-replaceable, AAA-size standard alkaline batteries to guard against the loss of system programming in case of a power failure. These batteries will retain the system programming for 45 days to 6 months, depending on the freshness of the batteries. It is recommended that you replace the batteries with fresh ones every year.

Use the following procedure to replace the batteries:

1 Locate the battery compartment at the bottom of the PARTNER ACS processor module, below the extension jacks.

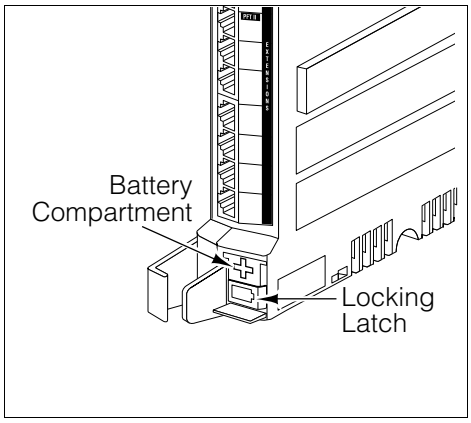

2 Push gently on the battery icon (the locking latch) and slide the battery icon up to cover the "plus" icon, which unlocks the battery assembly.

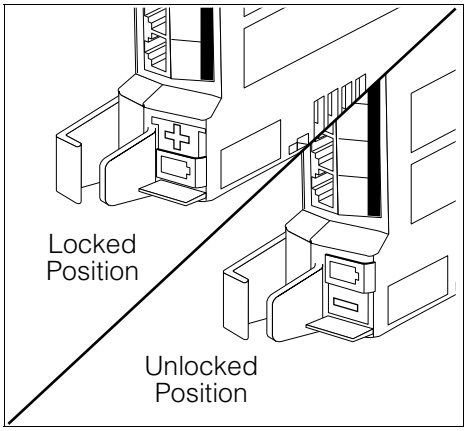

3 Remove the battery assembly by gently pulling the tab at the bottom of the battery compartment cover.

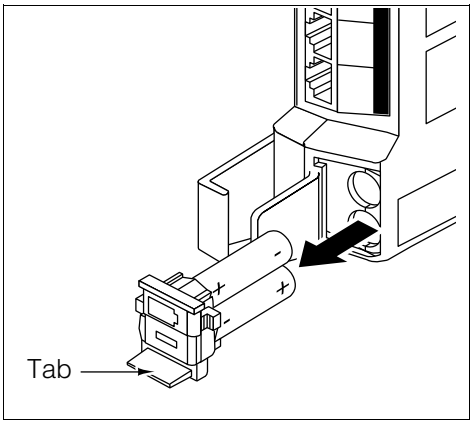

4 Insert two new AAA-size standard alkaline batteries into the metal spring clips by pushing them straight in, placing the negative (–) end of one battery into the bottom clip, and the positive (+) end of the other battery into the top clip.

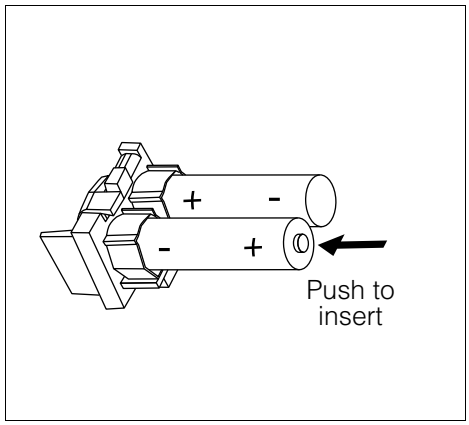

5 With the locking latch in the unlocked position (battery icon and “minus” icon visible), slide the battery assembly into the processor module along the battery guides on the inside of the battery compartment.

6 Make sure the battery assembly is pushed in far enough that the edges of the assembly slip behind the plastic housing of the processor module.

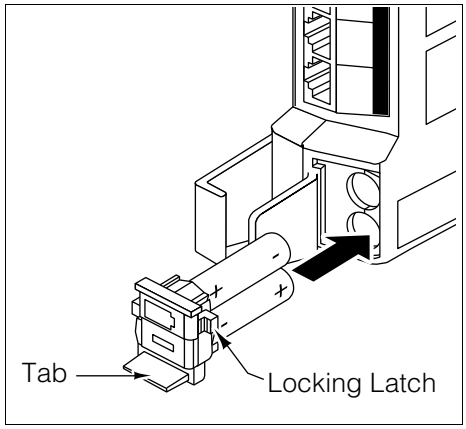

7 Pressing lightly on the battery icon on the front of the battery assembly, slide the locking latch downward to secure the assembly in place. The “plus” icon and the battery icon should now be visible on the front of the battery assembly. This is the locked position.

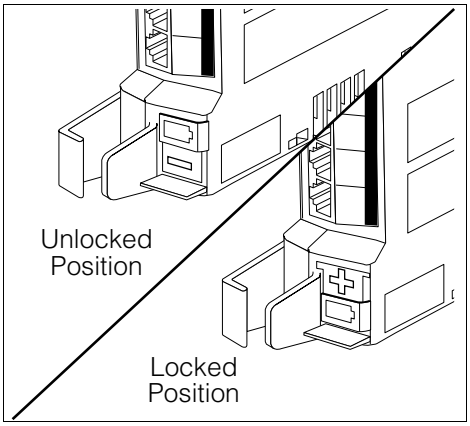

Powering Up the System

NOTE:
If you plan to use the Backup and Restore features of the system, insert a Backup/Restore PC Card, which must be purcased separately, in PC Card Slot 2 before applying power to the system and leave the PC Card in place until you are ready to use it. The system must be powered down before inserting or removing a PC Card from the PC Card slot. See “Inserting a PC Card” later in this guide.

1 A) If you have a Stand-Alone or a 2-Slot carrier configuration, skip to Step 1B. If you have a 5-Slot carrier, move the carrier’s On/Off switch to the “Off” position (“O”).

B) Press the power cord firmly into the power jack on the carrier or Stand-Alone PARTNER ACS processor module until it locks into place. (See the illustrations on this page for the location of the power jack for each type of configuration.)

C) Plug the other end of the power cord into a properly grounded three-prong wall outlet not controlled by a switch.

D) If you have a 5-Slot carrier, power up the control unit by moving the On/Off switch to the “On” position (“I”).

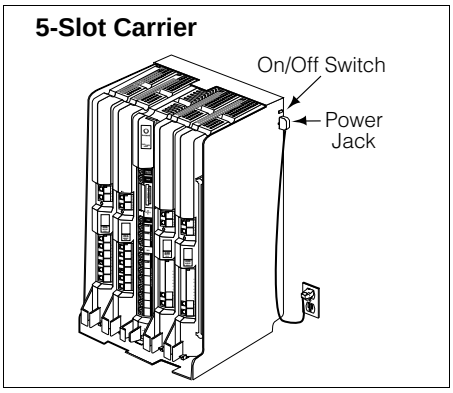

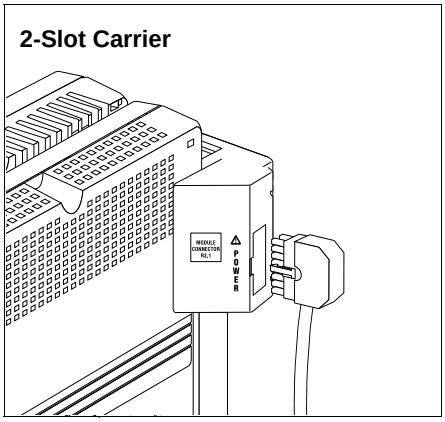

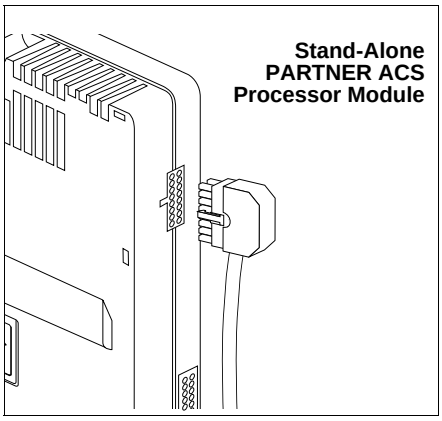

2 Check all green lights on the fronts of the modules. If all the lights are lit, continue with “Connecting Lines and Extensions”; otherwise:

A) *If a single light is out*, power down the control unit, reseat the module, then power up the control unit.

If multiple lights are out, power down the control unit, reseat the leftmost module that has a light out, then power up the control unit.

B) *If the lights are still out*, call for support as instructed on the inside front cover of this guide.

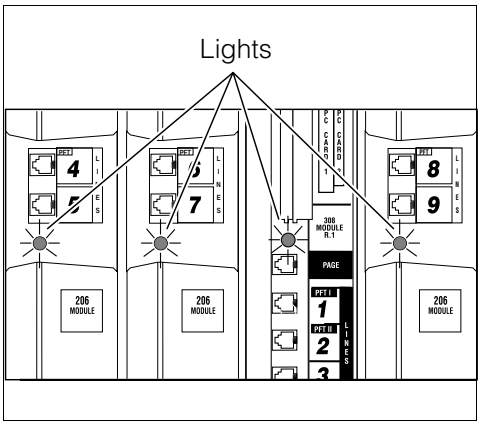

Connecting Lines and Extensions

If extensions are not wired to any modular jacks, call a qualified service technician.

1 A) Test for dial tone at the network interface jacks before connecting outside lines to the control unit. For the test, connect a standard phone to the first network interface jack.

B) Lift the handset and listen for dial tone. (If there is no dial tone, contact your local telephone company before continuing.)

C) Repeat for each network interface jack.

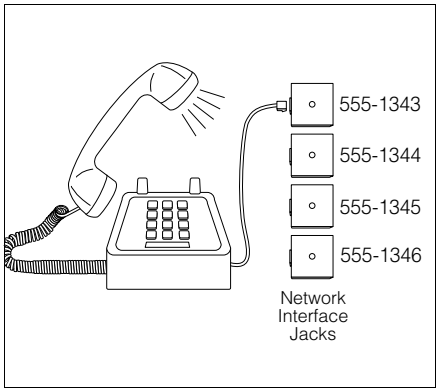

2 A) Connect line cords to the line jacks on the ACS processor module, and the 206 and 400 modules. Start at the top with the line jacks on the processor module, and then move to the leftmost 206 module. Fill each module before moving to the next module to the right.

B) Route each cord through the hook on the front of the module.

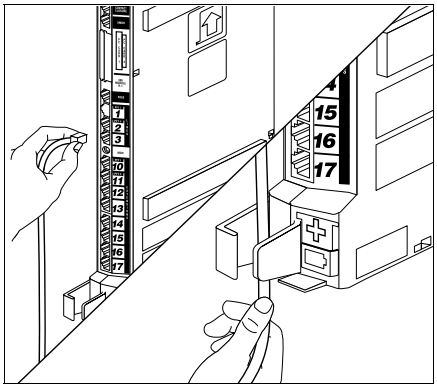

3 Connect the free end of each line cord to the appropriate network interface jack.

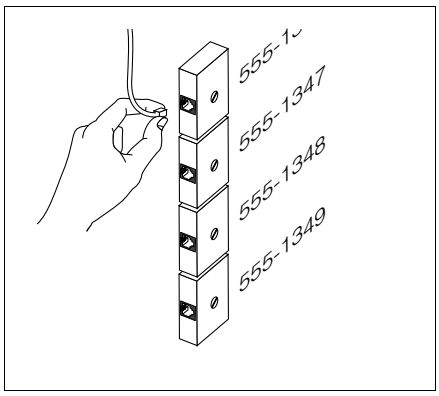

4 A) Test the lines—plug a system phone into extension jack 10. Press the line buttons for each outside line and listen for dial tone.

B) Repeat for extensions 18, 24, 30,and 36 (if available).

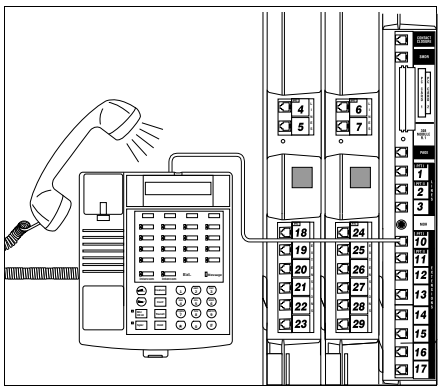

5 A) Connect modular telephone cords to the extension jacks, starting at the top extension jack on the PARTNER ACS processor module. When that module is full, move to the leftmost 206 module. Fill each module before moving to the next module to the right.

B) Route each cord through the hook on the front of the module.

C) Connect the free end of each modular telephone cord to the modular wall jacks for system extensions.

D) Dress the wires. Gather the line and extension cords hanging below the hooks of the first two modules and twist tie or wire wrap them. Repeat for the remaining cords. For the 5-Slot carrier, place each bundle of wires in the indentations cut out of the bottom edge of the carrier.

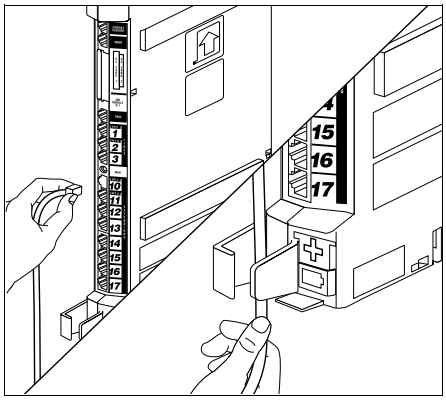

6 If you have installed a 5-Slot carrier configuration, install the cover as follows:

A) Make sure all modules are seated properly. The cover will not fit if the modules are not seated properly.

B) To cover the modules, grasp the upper edges of the cover and hold it squarely over the control unit. It is important to install the cover to keep the modules dust-free and the system working efficiently.

C) Place the cover over the modules and make sure it fits firmly in place.

D) Insert the #6 screw into the tab on the lower front of the cover. Tighten the screw.

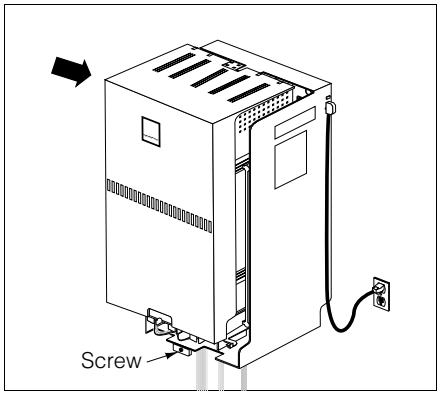

Connecting Caller ID Display Units

The system provides multi-line Caller ID on system display phones without having to install additional devices. (See "Caller ID" in Chapter 5 of the *PARTNER Advanced Communications System Programming and Use* guide for more information.) However, if you want to display or process Caller ID information for other applications—for example, on a PC that displays call records—you must connect the devices as described here. First, you must subscribe to Caller ID service (on a per-line basis) from your local telephone company, then connect the Caller ID display device directly to the line that supports Caller ID at the network interface jack. Additionally, you must provide a separate wiring run for the device to the appropriate location. To have additional wiring runs installed, call a qualified technician.

NOTE:
To process Caller ID information for multiple lines, you must provide a separate device and a separate wiring run for each line, even if they are all at a single phone.

1 Insert a Lucent Technologies 267F2 Bridging Adapter (separately orderable) into the network interface jack associated with the line that has Caller ID service.

2
- A) Plug one end of a line cord into a jack on the bridging adapter.
- B) Plug the free end of the line cord into the appropriate line jack in the control unit.
- C) Route the cord as you did for other line and extension cords.

3
- A) Plug one end of a second line cord into the other jack on the bridging adapter.
- B) Plug the free end of the cord into the appropriate modular connecting block in the equipment room.
- C) Plug the Caller ID display unit into the additional modular jack—provided by the separate wiring run—at the appropriate location.
- D) Place the Caller ID display unit next to the phone.
- E) Make sure the Caller ID line is assigned to the extension where the Caller ID display device is located. Refer to "Line Assignment (#301)" in Chapter 5 of the *PARTNER Advanced Communications System Programming and Use* guide for programming instructions.

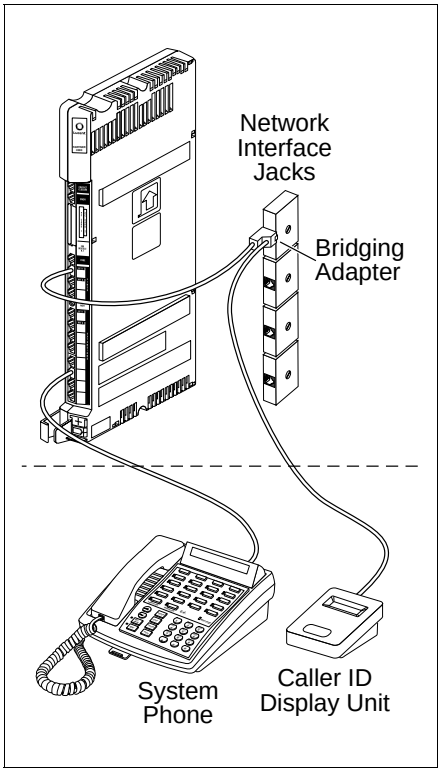

Assembling System Phones

All PARTNER-model system phones are shipped with a stand for either desk mounting or wall mounting the phone.

Desk Mounting

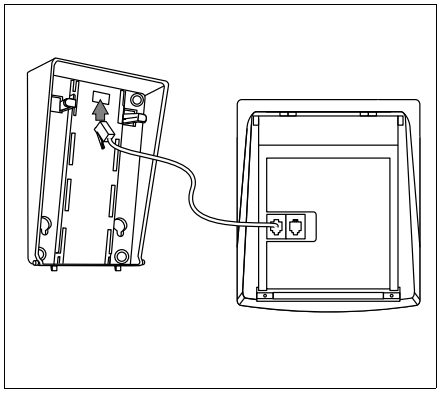

1 A) Gently place the phone upside down.

B) Route the telephone cord through the hole in the top center of the stand.

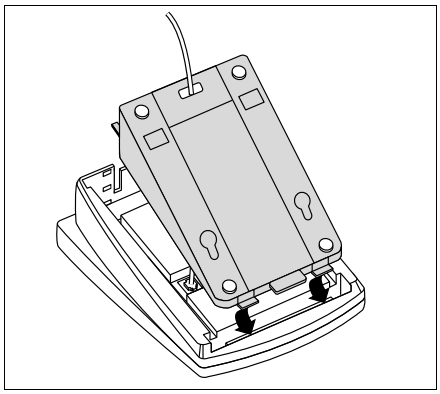

2 Insert the tabs on the narrow end of the stand into the slots on the inside bottom edge of the phone.

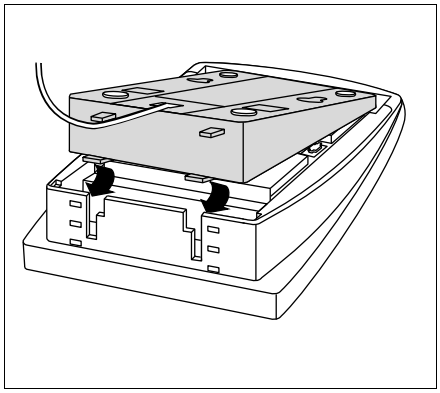

3 A) While pressing in the tabs that protrude from the wide end of the stand, lower the stand to the phone.

B) Release the tabs to lock the stand into one of the three positions provided by the openings in the back of the phone.

C) The height of the stand is adjustable to three positions: low, medium, and high. The phone height can be adjusted by moving the locking tabs to a different position.

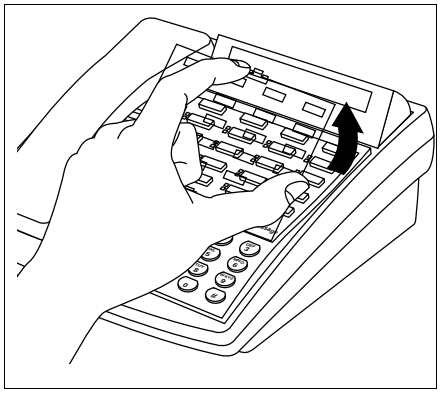

4 A) Turn the phone over.

B) Remove the plastic cover from the phone. Label the button sheet to show any programmed lines or button features, then place the button sheet on the phone so the holes fit over the buttons. Carefully replace the plastic cover.

C) Adjust the swivel display to the desired angle (low, medium, or high).

D) To access the *User Instruction Cards*, pull out the tray located under the front of the phone.

Wall Mounting

Wall mounting instructions apply only to PARTNER- model phones. For all other system phones, follow the instructions provided with the phone.

1 A) Reverse the plastic hook that sits in the earpiece part of the handset cradle.

B) Turn the phone upside down and remove the tray that holds the *User Instruction cards*: press the tabs on both sides of the tray near the pull out tab while you slide the tray straight out.

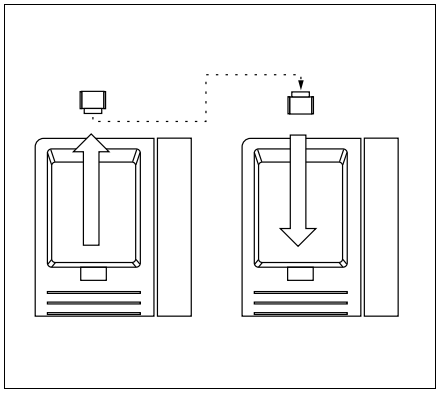

2 Holding the stand with the wide edge down, mount the stand on the wall plate using the keyholes on the base of the stand. For proper mounting, the wall plate must be a Lucent Technologies 630B connecting block.

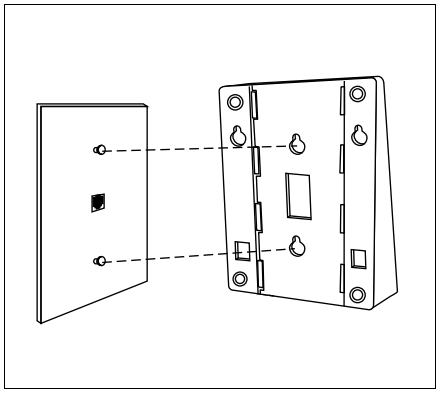

3 A) Plug one end of the telephone cord into the jack in the center of the wall plate.

B) Plug the other end of the telephone cord into the LINE jack on the bottom of the telephone.

C) Wrap any excess cord around the cord wrap posts on the bottom inside of the stand.

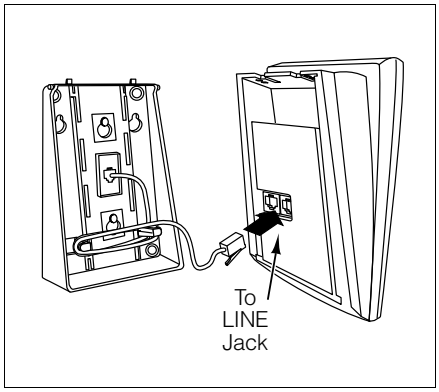

4 A) To mount the phone on the stand, insert the tabs on the top of the stand into the *middle* set of notches on the top edge of the phone.

B) Make sure the telepone cord is neatly wrapped inside the phone, then rotate the phone down until the bottom edge snaps into position.

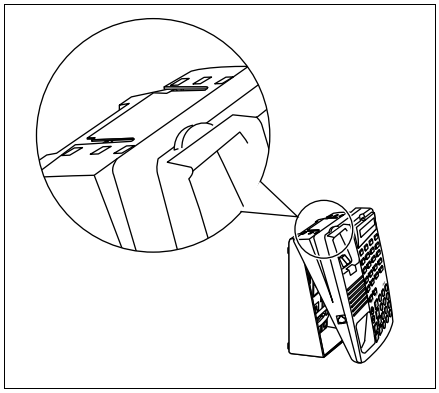

5 A) Remove the plastic cover from the phone. Label the button sheet to show any programmed lines or button features, then place the button sheet on the phone so the holes fit over the buttons. Carefully replace the plastic cover.

B) Make sure the swivel display is set to the lowest position.

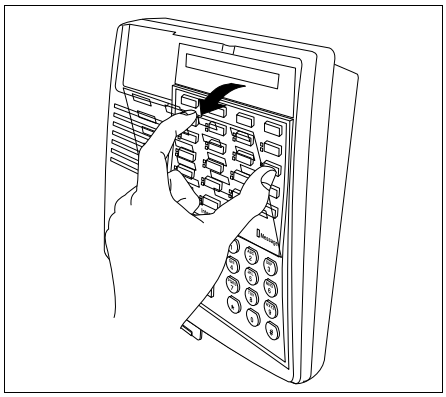

Connecting and Testing Telephones

1 To connect a phone, plug the modular telephone mounting cord into a modular wall jack or directly into a module extension jack. (If you are connecting a standard phone and its mounting cord is loose, try a Lucent Technologies D2R mounting cord instead.)

To install two phones (or other devices) on a single extension jack, see “Combination Extensions” earlier in this guide.

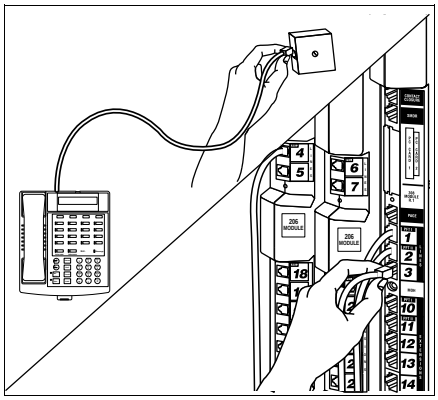

2 Test the telephone for proper operation. To test the power and lights on a system phone:

A) While the phone is idle, press and hold the # button for five seconds.

B) Before releasing the # button, lift the handset. All lights should light, the ringer should sound, and (on system display phones only) a test pattern should appear on the display. (If not, call for support as instructed on the inside front cover of this guide.)

C) Replace the handset; the phone is now in normal operating mode.

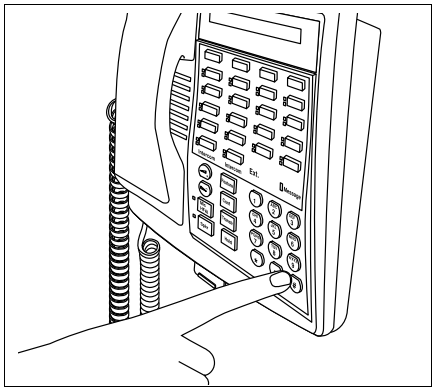

Connecting Contact Closure, Call Reporting (SMDR), Paging, and Music-On-Hold Devices

Only steps for connection to the processor module are provided here. See the manufacturer's instructions for more information on installing and using these devices.

Contact Closure Adjunct

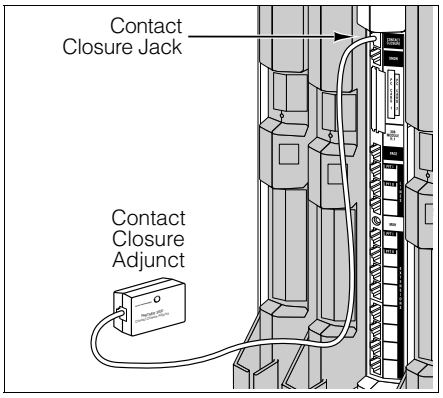

1. Insert the modular plug into the Contact Closure jack, the first jack on the PARTNER ACS processor module.
2. Route the cord as you did for the line and extension cords, then connect the other end of the cord to the jack in the Contact Closure Adjunct.
3. Have a qualified electrician wire the Contact Closure device or devices to the wiring receptacles in the other end of the Contact Closure Adjunct. See the information shipped with the Contact Closure Adjunct for wiring instructions.

Call Reporting (SMDR) Printer

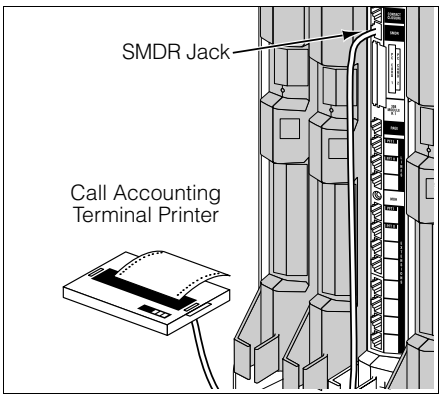

1. Insert one end of a D8W modular cord into the SMDR jack, the second jack on the PARTNER ACS processor module.
2. Plug the other end of the cord into a 355A adapter, then plug the adapter into the printer's RS-232C serial port.

Paging System

If you connect a paging system from a manufacturer other than Lucent Technologies, a paging interface may be required.

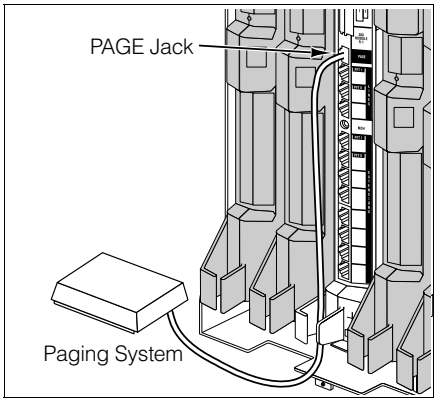

1. Insert the modular plug into the PAGE jack on the PARTNER ACS processor module (located near the middle of the processor, just above the line jacks).
2. Route the cord as you did for the line and extension cords, then connect the other end of the cord to the paging system.

Music-on-Hold Audio Source

The performance of music over telephone lines is a public performance under United States Copyright law. Accordingly, in order for the performance of that music to be lawful, it must be licensed annually to the user by the copyright owners or their representatives.

You can purchase a Magic On Hold system from Lucent Technologies, 1 800 446-5366, which includes the required license for the first year. This license must be renewed annually.

1. Insert an RCA phono plug into the MUSIC ON HOLD jack on the PARTNER ACS processor module (located near the middle of the processor, below the line jacks).
2. Route the cord as you did for the line and extension cords, then connect the other end of the cord to the audio source.
3. Place a call on hold and listen. If you do not hear music at any setting, refer to “Music On Hold (#602)" and “Music On Hold Volume (#614)” in Chapter 5 of the *PARTNER Advanced Communications System Programming and Use* guide.

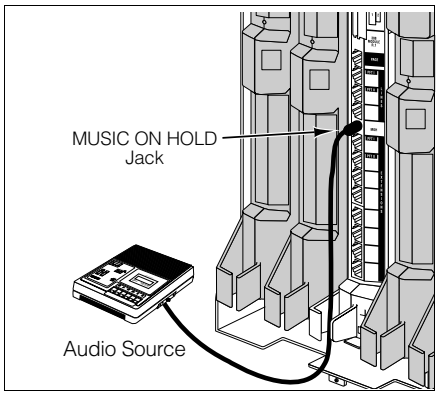

Connecting a PARTNER-CA48 Intercom Autodialer

The PARTNER-CA48 Intercom Autodialer is shipped with an adapter, a D8W line cord, a power cord, a power unit, and a button-labeling sheet.

NOTE:
The PARTNER-CA48 Intercom Autodialer can be wall mounted to work next to a wall-mounted system phone. See the instructions provided with the autodialer.

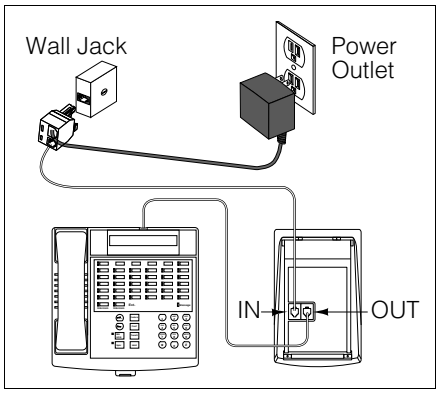

1 Plug the adapter into the wall jack.

2 A) Plug one end of the D8W line cord into the J1 jack on the adapter.

B) Plug the other end of the D8W line cord into the IN jack on the bottom of the autodialer.

3 A) Plug the blue-tinted connector (labeled D8AC) of the power cord into the jack on the power unit.

CAUTION:
Use only the power unit supplied with the PARTNER-CA48 Intercom Autodialer.

B) Plug the other end (clear tinted) of the power cord into the J2 jack on the adapter.

C) Plug the power unit into an electrical outlet.

4 Plug the phone's modular telephone cord into the OUT jack on the bottom of the autodialer.

5 A) Arrange the autodialer on the desk next to the phone.

B) Remove the plastic cover from the autodialer and label the button sheet with employee names. Place the button sheet on the autodialer, then carefully replace the plastic cover.

C) Adjust the height of the autodialer to match the system phone.

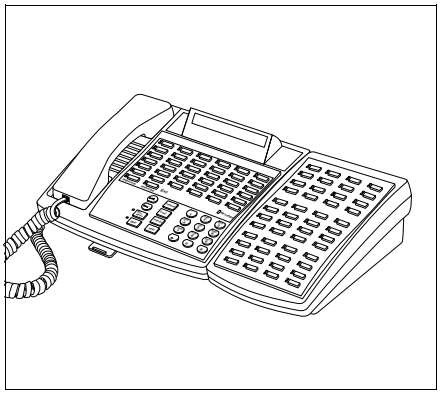

IMPORTANT:
If you unplug the system phone that is connected to an autodialer, you must reset the autodialer. To do so, unplug the D8W line cord (connected to the IN jack on the bottom of the autodialer) from the J1 jack on the adapter, then plug it back in.

Equipment Upgrades

If you are upgrading from a Stand-Alone PARTNER ACS processor module to a 2-Slot carrier, see "Wall-Mounting a 2-Slot Carrier and Modules" earlier in this guide for instructions. If you are adding modules to an existing 5-Slot carrier, see "Adding New Modules," below.

Adding New Modules

WARNING:
Before starting, verify that you have charged batteries installed in the PARTNER ACS processor module, and then disconnect the power cord from the power jack on the carrier.

1

A) Move the carrier's On/Off switch to the "Off" position ("O").

B) Loosen the screw on the lower front of the carrier's cover. Then place one hand on the handle on the lower front and place your other hand on the top of the cover.

C) Gently pull the cover up and away from the carrier—be careful not to break the tabs that attach the cover to the carrier.

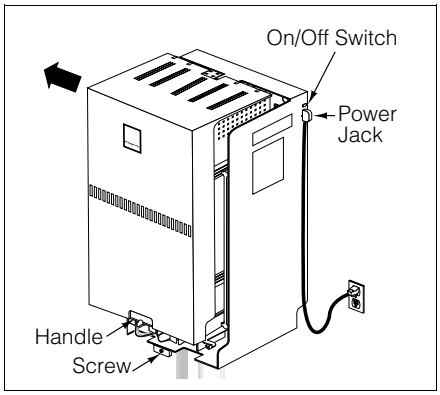

2

Before installing a module, make sure the clear, plastic protector has been removed from the connector area on the rear of the module. To remove the protector, grasp the tabs on the ends of the protector and lift.

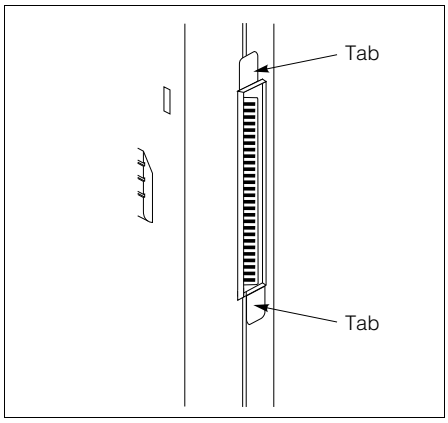

3

A) Before you insert the new module, make sure that all 400 (or 200) modules are installed to the right of all 206 modules. If you need to move a module to accommodate the new one, see "Replacing System Modules" later in this guide.

B) Push slowly but firmly in the center of the module until the module locks into place, and is attached to the rear of the carrier. Do not force the module. If the module does not insert easily, remove it, clear any obstruction, and reinsert it.

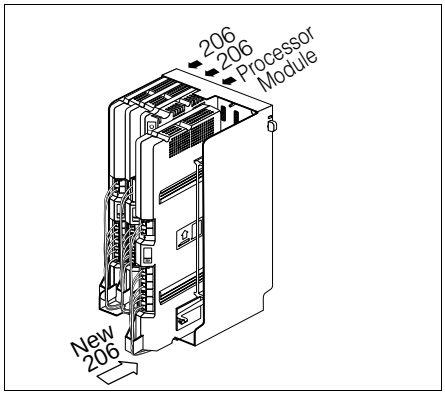

4 A) See “Connecting Lines and Extensions” for instructions for connecting line and/or extension cords to the new module.

B) Reconnect the power cord.

C) Move the carrier’s On/Off switch to the “On” position (“I”).

5 Check that all green lights on the fronts of the modules are lit:

A) *If a single light is out*, power down the control unit, reseat the module, then power up the control unit.

If multiple lights are out, power down the control unit, reseat the leftmost module that has a light out, then power up the control unit.

B) *If the lights are still out*, call for support as instructed on the inside front cover of this guide.

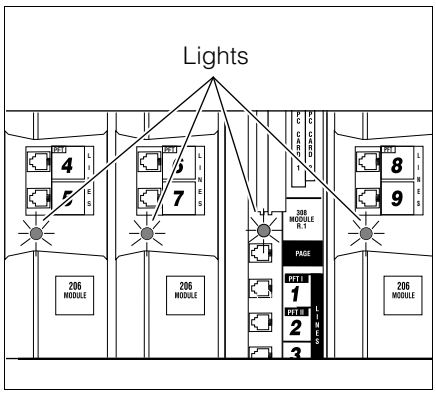

6 A) Make sure all modules are seated properly. The cover will not fit if the modules are not seated properly.

B) To replace the cover, grasp it by its upper edges and hold it squarely over the control unit.

C) Place the cover over the modules and make sure it fits firmly in place.

D) Tighten the screw on the lower front of the cover.

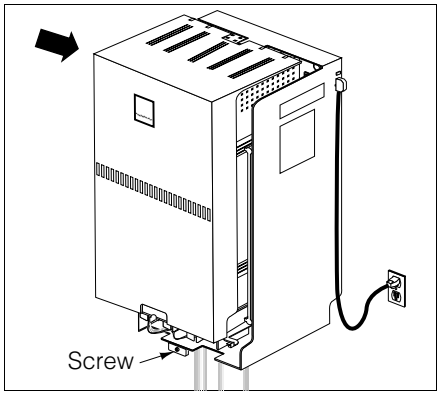

Replacing System Modules

The procedure for replacing a module depends on your configuration:

If you have a...	See...
Stand-Alone PARTNER ACS processor module configuration	"Replacing a Stand-Alone PARTNER ACS Processor Module"
2-Slot carrier configuration	"Replacing Modules in a 2-Slot Carrier"
5-Slot carrier configuration	"Replacing Modules in a 5-Slot Carrier"

Replacing a Stand-Alone PARTNER ACS Processor Module

WARNING:
Before starting, verify that you have charged batteries installed in the PARTNER ACS processor module, and then disconnect the power cord from the power jack on the processor module. For an illustration showing the location of the power jack, see "Powering Up the System" earlier in this guide.

1. Check the slack in the wires. If there is not enough slack to remove the module without pulling the line and extension cords free, label and disconnect the wires before continuing.
2. Remove the screws at the top and bottom of the module, and remove the module from the wall.
3. Follow the instructions in "Wall-Mounting a Stand-Alone PARTNER ACS Processor Module" and "Inserting Batteries in the PARTNER ACS Processor Module," earlier in this guide.
4. Connect the line and extension cords one at a time, making sure to place the correct cords into their corresponding jacks on the new module. (See "Connecting Lines and Extensions" earlier in this guide.)

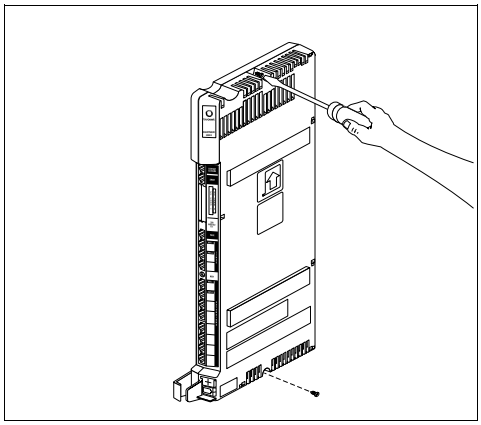

5. Reconnect the power cord.

Replacing Modules in a 2-Slot Carrier

WARNING:
Before starting, verify that you have charged batteries installed in the PARTNER ACS processor module, and then disconnect the power cord from the power jack on the carrier. For an illustration showing the location of the power jack, see "Powering Up the System" earlier in this guide.

1. Check the slack in the wires. If there is not enough slack to remove the modules without pulling the line and extension cords free, label and disconnect the wires before continuing.

2. Remove the long screw at the bottom of the modules.

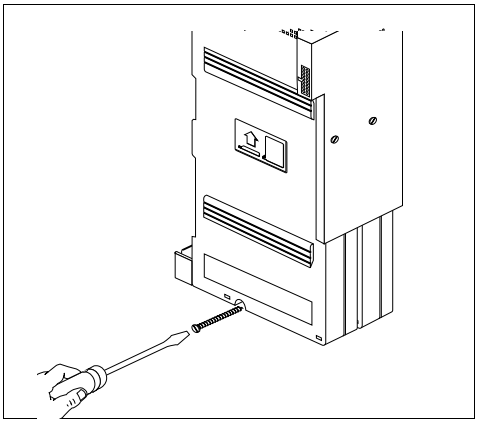

3. Remove the screws that attach the carrier to the modules.

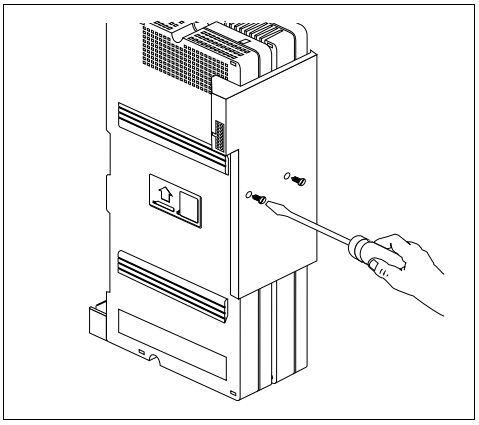

4. Pull the carrier to the right to remove it.

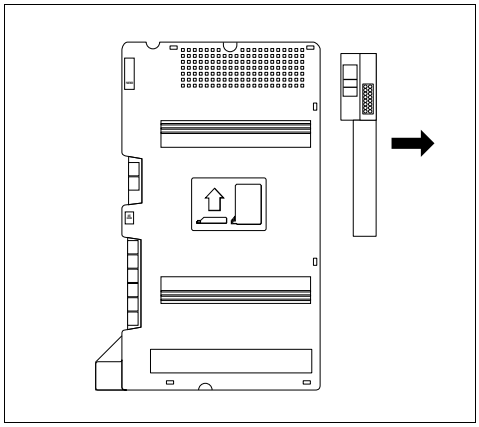

5 A) Slide the top module to the left to disengage its interlocking mounting tracks from the PARTNER ACS processor module.

B) If you are replacing the PARTNER ACS processor module, skip to Step 7. If you are replacing the top module, continue with Step 6.

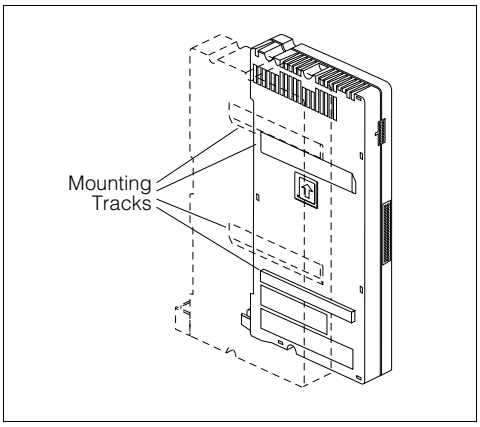

6 Mount the new module by following Steps 3 through 8 in “Wall-Mounting a 2-Slot Carrier and Modules,” earlier in this giude, and then skip to Step 8 below.

7 A) Remove the screw at the top of the PARTNER ACS processor module and remove the module from the wall.

B) Mount the new PARTNER ACS processor module by following the instructions in “Wall-Mounting a Stand-Alone PARTNER ACS Processor Module” and “Inserting Batteries in the PARTNER ACS Processor Module,” earlier in this guide.

C) Remount the top module by following Steps 1 and 3 through 8 in “Wall-Mounting a 2-Slot Carrier and Modules” earlier in this guide.

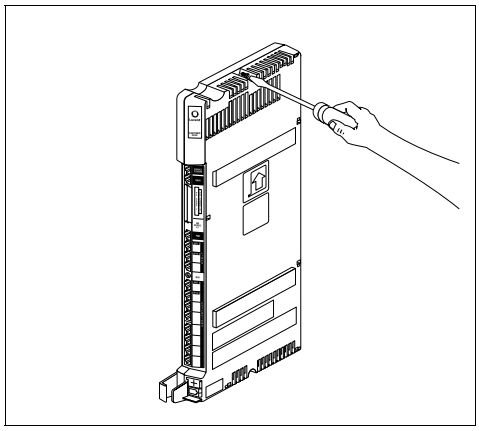

8 Connect the line and extension cords one at a time, making sure to place the correct cords into their corresponding jacks on the new module. (See “Connecting Lines and Extensions” earlier in this guide.)

9 Reconnect the power cord.

Replacing Modules in a 5-Slot Carrier

WARNING:
Before starting, verify that you have charged batteries installed in the PARTNER ACS processor module, and then disconnect the power cord from the power jack on the carrier.

1

A) Move the carrier's On/Off switch to the "Off" position ("O").

B) Loosen the screw on the lower front of the carrier's cover. Then place one hand on the handle on the lower front and place your other hand on the top of the cover.

C) Gently pull the cover up and away from the carrier—be careful not to break the tabs that attach the cover to the carrier.

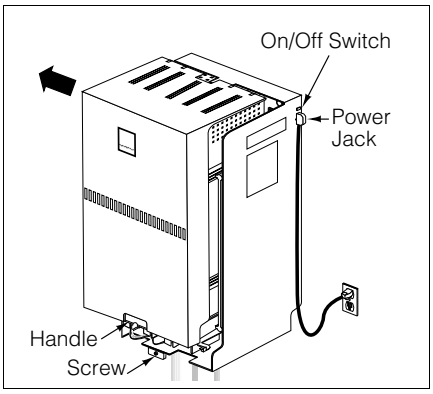

2

Before installing a module, make sure the clear, plastic protector has been removed from the connector area on the rear of the module. To remove the protector, grasp the tabs on the ends of the protector and lift.

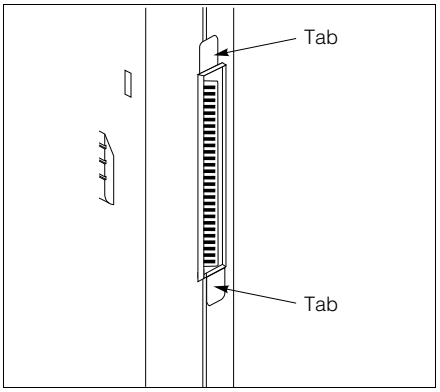

3

A) Check the slack in the wires. If there is not enough slack to remove the module without pulling the line and extension cords free, label and disconnect the wires before continuing with Step 3B.

B) Place one hand on top of the module. With your other hand, grip the plastic bracket on the bottom front of the module, and pull out the old module.

C) If you are replacing a module with one of a different type, make sure that all 400 (or 200) modules are installed to the right of all 206 modules and that the PARTNER ACS processor module remains in the center slot.

D) To insert the replacement, push slowly but firmly in the center of the module until the module locks into place and is attached to the rear of the carrier. Do not force the module. If the module does not insert easily, remove it, clear any obstruction, and reinsert it.

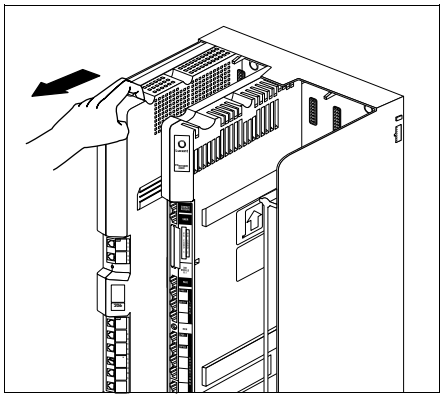

4 A) Connect the line and extension cords one at a time, making sure to place the correct cords into their corresponding jacks on the new module. (See “Connecting Lines and Extensions” earlier in this guide.)

B) Reconnect the power cord.

C) Move the carrier’s On/Off switch to the “On” position (“I”).

5 Check that all green lights on the fronts of the modules are lit:

A) *If a single light is out*, power down the control unit, reseat the module, then power up the control unit.

If multiple lights are out, power down the control unit, reseat the leftmost module that has a light out, then power up the control unit.

B) *If the lights are still out*, call for support as instructed on the inside front cover of this guide.

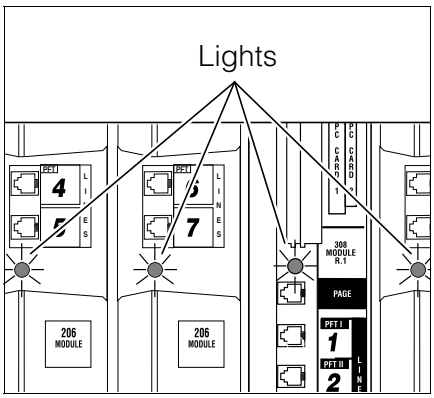

6 A) Make sure all modules are seated properly. The cover will not fit if the modules are not seated properly.

B) To replace the cover, grasp it by its upper edges and hold it squarely over the control unit.

C) Place the cover over the modules and make sure it fits firmly in place.

D) Tighten the screw on the lower front of the cover.

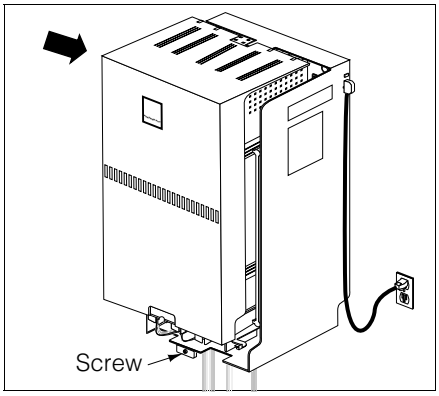

Inserting or Removing a PC Card

CAUTION:
Before starting, verify that you have charged batteries installed in the PARTNER ACS processor module, and then disconnect the power cord from the power jack on the carrier or the Stand-Alone PARTNER ACS processor module. For illustrations showing the location of the power jack on the various configurations, see "Powering Up the System" earlier in this guide.

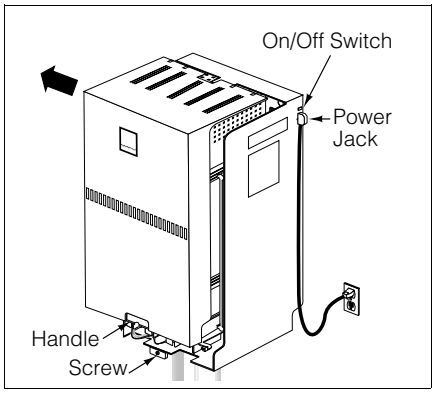

1 A) If you have a Stand-Alone, a 2-Slot carrier, or a newly installed 5-Slot carrier configuration, skip to Step 2. If you have an existing 5-Slot carrier, move the carrier's On/Off switch to the "Off" position ("O") and continue with Step 1B.

B) Loosen the screw on the lower front of the cover. Then place one hand on the handle on the lower front and place your other hand on the top of the cover.

C) Gently pull the cover up and away from the carrier—be careful not to break the tabs that attach the cover to the carrier.

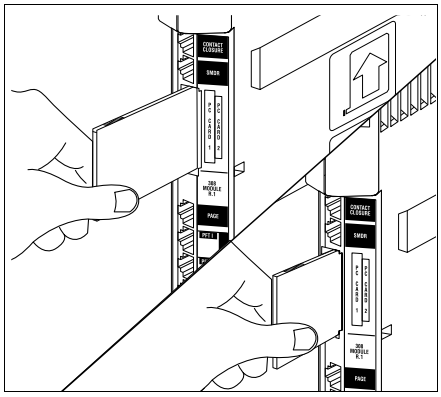

2 Insert the PC Card in the PC Card slot on the PARTNER ACS processor module. When inserted properly, the PC Card projects about 1-5/8" (4 cm) from the module.

3 Power up the system:

A) Reconnect the power cord.

B) If you have a 5-Slot carrier, move the carrier's On/Off switch to the "On" position ("I").

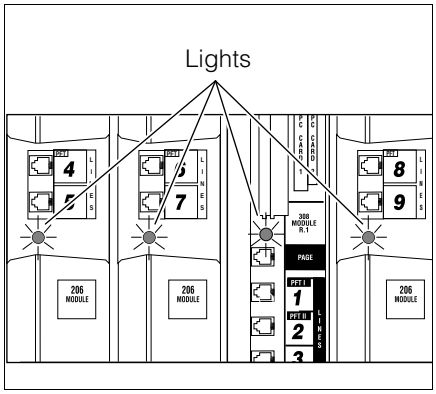

4 Check that all green lights on the fronts of the modules are lit:

A) *If a single light is out*, power down the control unit, reseat the module, then power up the control unit.

If multiple lights are out, power down the control unit, reseat the leftmost module that has a light out, then power up the control unit.

B) *If the lights are still out*, call for support as instructed on the inside front cover of this guide.

5 A) If you have a 2-Slot carrier or a Stand-Alone configuration, you are finished with this procedure. If you have a 5-Slot carrier, continue with Step 5B.

B) Make sure all modules are seated properly. The cover will not fit if the modules are not seated properly.

C) To replace the cover, grasp it by its upper edges and hold it squarely over the control unit.

D) Place the cover over the modules and make sure it fits firmly in place.

E) Tighten the screw on the lower front of the cover.

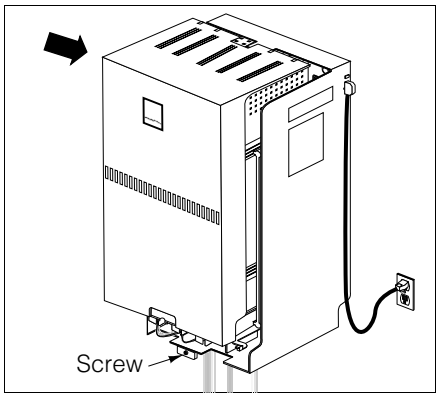

Specifications

Capacities	System	Module	Extension Jack
	• 15 outside lines via line jacks on one ACS processor module plus two 206 modules plus two 400 modules • 32 extensions via extension jacks on one ACS processor module plus four 206 modules • 1 loudspeaker paging system via PAGE jack on ACS processor module • 1 audio source via MUSIC ON HOLD jack on ACS processor module (RCA phono plug required) • 1 call reporting device via SMDR jack on ACS processor module (355 A/F adapter required) • 1 Contact Closure Adjunct using CONTACT CLOSURE jack on ACS processor module • 2 doorphones, using two extension jacks • 1 voice messaging system—PARTNER MAIL VS, which uses a slot in the 2- or 5-Slot carrier, or PARTNER MAIL, which connects to either 3 or 5 extension jacks	**ACS Processor Module** • 3 outside lines • 8 extensions • 2 touch-tone receivers • 2 power-failure transfer extensions **206 Module** • 2 outside lines • 6 extensions • 1 touch-tone receiver • 1 power-failure transfer extension **400 Module** • 4 outside lines • No extensions • 2 touch-tone receivers	• Maximum two devices per extension jack, total REN on jack not to exceed 2.0 [System phone REN is 0.0 (zero)] **NOTE:** The two devices combined on an extension jack can be a system phone with a standard device, or two standard devices. DO NOT connect two system phones to the same extension jack. If a device lists two RENs, use the higher number when adding up the RENs. • No more than one system phone per jack *For programming, a system display phone must be connected to extension 10 or 11.*

Dimensions and Weights (approx.)		
• Processor Module	11”(D) x 17”(H) x 1.5”(W) or 27.9 x 43.2 x 3.8 cm	4.5 lbs or 2 kgs
• 206 module	11”(D) x 17”(H) x 1.5”(W) or 27.9 x 43.2 x 3.8 cm	4.5 lbs or 2.0 kgs
• 400 module	11”(D) x 17”(H) x 1.5”(W) or 27.9 x 43.2 x 3.8 cm	4.0 lbs or 1.8 kgs
• 2-Slot carrier	2”(D) x 9.75”(H) x 5.5”(W) or 5.1 x 24.8 x 14 cm	1.0 lbs or .46 kgs
• 5-Slot carrier	12”(D) x 19”(H) x 11”(W) or 30.5 x 48.3 x 27.9 cm	5.5 lbs or 2.5 kgs
• PARTNER-34D phone	9.8”(D) x 3.75”(H) x 9.3”(W) or 24.9 x 9.5 x 23.6 cm	2.7 lbs or 1.2 kgs
• PARTNER-18D phone	9.8”(D) x 3.75”(H) x 7.9”(W) or 24.9 x 9.5 x 20.1 cm	2.4 lbs or 1.1 kgs
• PARTNER-18 phone	9.8”(D) x 3.75”(H) x 7.9”(W) or 24.9 x 9.5 x 20.1 cm	2.3 lbs or 1.0 kgs
• PARTNER-6 phone	9.8”(D) x 3.75”(H) x 6.1”(W) or 24.9 x 9.5 x 15.5 cm	1.9 lbs or 0.9 kgs
• PARTNER-CA48 Autodialer	9.8”(D) x 3.75”(H) x 6.1”(W) or 24.9 x 9.5 x 15.5 cm	1.5 lbs or 0.7 kgs

Switch Fabric	• Full digital, nonblocking
Electrical Specifications	• 45 Watts (154 BTUs/hr.) per ACS processor module during normal power consumption • 85 Watts (290 BTUs/hr.) per ACS processor module during maximum power consumption • 10 Watts (35 BTUs/hr.) per 400 module, normal and maximum power consumption • 35 Watts (120 BTUs/hr.) per 206 module during normal power consumption • 75 Watts (256 BTUs/hr.) per 206 module during maximum power consumption • U.S., Canada, and other 110V countries: – ACS processor module and one 206 module (2-Slot carrier) = 2.3 Amps max. current, full system capacity – ACS processor module and four 206 modules (5-Slot carrier) = 4 Amps max. current, full system capacity • Countries using 220 V: – ACS processor module and one 206 module (2-Slot carrier) = 1.2 Amps max. current, full system capacity – ACS processor module and four 206 modules (5-Slot carrier) = 2 Amps max. current, full system capacity • 45 days to 6 months memory backup with 2 AAA-size standard alkaline batteries (IEC LR03)
Processor Module Specifications	• 68306 16 Mhz processor • 256Kbyte RAM • 512Kbyte FLASH ROM • Custom VLSI DSP ASIC—16 bit, 52 Mhz – VLSI = Very Large Scale Integration – DSP = Digital Signal Processor – ASIC = Application Specific Integrated Circuit
Extension Jack Specifications	• Ringing voltage: +5VDC, –140 VDC peak to peak; trapezoidal wave shaping • 35- to 38-Volt talk battery • Ringing frequency: 20 Hz
PAGE Jack Specifications	• Draws current on inner wire pair • Provides paging contact closure on outer wire pair • 600 Ohm impedance
MUSIC ON HOLD Jack Specifications	• Accepts 2 Volts at 50 Kohms maximum input • 0 –18 dB attenuation
CONTACT CLOSURE Adjunct Jack Specifications	• Operates up to 150 feet (45.72 meters) from control unit using 24 gauge solid conductor wire if 2 Contact Closures used; up to 800 feet (243.84 meters) from control unit using 24 gauge solid conductor wire if only 1 Contact Closure used • Install the Contact Closure Adjunct in the same building as the control unit; cannot be installed out-of-doors • Has three terminals per Contact Closure, providing a normally open and normally closed function for each Contact Closure • Maximum contact voltages and current: 30 VAC, 1 Amp 50 VDC, 1 Amp
SMDR Output Format	• 1200 baud • 8 data bits • XON/XOFF protocol • Line feeds • No parity • 2 stop bits • Carriage return

Environmental Requirements–Control Unit	• Mount on a wall at least 2 feet (0.6 meters) from the floor (wall mounting required) • Locate within 5 feet (1.5 meters) of the network interface jacks and a properly grounded electrical outlet not controlled by a switch, using supplied 7-foot (2.1-meter) cords • Operating temperature 32º to + 104ºF (0º to + 40ºC), not in direct sunlight • Humidity 15%–90%, noncondensing • For proper ventilation and easy replacement of modules, provide the following minimum clearance around the control unit: – *5-Slot carrier:* 1 foot (0.3 meter) clearance at the top and sides and 2 feet (0.6 meter) at the front and bottom – *2-Slot carrier or Stand-Alone ACS processor module:* 1 foot (0.3 meter) clearance at the front, top and right side, and 2 feet (0.6 meter) at the bottom and left side. • Locate in an area free of excess moisture, corrosive gases, dust, and chemicals
Electrical Requirements–Control Unit	• U.S. and Canada: 90–130 VAC, 50–60 Hz, 3-prong outlet separate ground, separately fused at 15 Amps • Other countries: 90–264 VAC (220 VAC fused at 10 Amps) • Grounding to comply with Underwriters Laboratories (UL) 1459: A. An insulated grounding conductor that is not smaller in size and equivalent in insulation material and thickness to the grounded and ungrounded branch circuit supply conductors, except that it is green with or without one or more yellow stripes, is to be installed as part of the circuit that supplies the product or system. B. The grounding conductor mentioned in item A is to be connected to ground at the service equipment. C. The attachment-plug receptacles in the vicinity of the product or system are all to be of a grounding type, and the grounding conductors serving these receptacles are to be connected to earth ground at the service equipment.
Requirements for Out-of-Building Installations	• Installation of a telephone or other standard (tip/ring) device in another building requires the following In-Range Out-of-Building (IROB) protectors to protect the control unit and device from electrical surges: – System phone: two Lucent Technologies IROB protectors – Standard phone: one Lucent Technologies IROB protector plus one carbon block protector • Installation of a Contact Closure Adjunct controlled device outside the building requires a Lucent Technologies 146G Surge Protector-SCL/8 to protect the control unit from electrical surges.
Wiring	• System phones: Lucent Technologies SYSTIMAX® Bulk Nonplenum (DIW) cable, Lucent Technologies SYSTIMAX Bulk Plenum (HALAR/HALAR) cable, or at least 2-pair (4-wire) star (“home run” not “loop”) • Other standard telecommunications equipment (single-line phones, fax machines, answering machines, etc.): 1-pair (2-wire) mounting cords (Lucent Technologies D2R mounting cords recommended) • Bridging adapter: Lucent Technologies 267F2 • Range: 1,000 feet (305 meters) for system phones; 3,000 feet (915 meters) for standard devices
Safety Requirements	• U.S.: Meets UL 1459 Issue 2 • Canada: Meets CSA C22.2, 225 • All other countries: Meets IEC950 Second Edition and EN60950 Second Edition

Government Approvals and Local Phone Company Information	• U.S.:	FCC Part 68 FCC registration number (U.S.): See the label on the side of the control unit. FCC Part 15: *Class A:* 5-Slot Configuration 2-Slot Configuration with PARTNER MAIL VS *Class B:* PARTNER Advanced Communications System Stand-Alone Configuration 2-Slot Configuration with 200, 206, or 400 module plus ACS processor module REN (outside line jack): 0.9A per line jack Jack type: RJ11C Loop start lines
	• Canada:	IC CP01, Issue 7 IC registration number (Canada): See the label on the side of the control unit. IC CS03, Issues 6 & 7 Load Number = 7 Loop start lines