Meridian 1

Option11C Compact

1.5 PRI/DTI administration and maintenance guide

Document Number: 553-3121-310
Document Release: Standard 1.00
Date: November 1997

This Nortel documentation is protected by copyright. It may not be copied in anyorm or medium except puruant to the Nortel license to Copy Documentation ("License"). If a License has been purchased, it will be enclosed with this copy of Nortel documents.

© 1997
All rights reserved

Printed in Canada

Information is subject to change without notice. Northern Telecom reserves the right to make changes in design or components as progress in engineering and manufacturing may warrant. This equipment has been tested and found to comply with the limits for a Class A digital device pursuant to Part 15 of the FCC rules.

Meridian and Option11C Compact are trademarks of Northern Telecom.

Revision history

November 1997

Standard, issue 1.00.

July 1997

Draft, issue 0.00.

Contents

About this guide 1

PRI/DTI implementation 3

Overview 3

Hardware Requirements 5
- Card 5
- Cables 5
- Channel Service Units 5
- Echo Canceller 5

Hardware description 6
- NTMW04 DTI/PRI circuit card 6
- Clock recovery circuitry 6
- Clocking modes 6
- Clock controller LED states 7

Installing PRI/DTI hardware 8
- Inserting the NTMW04 into the main cabinet 8
- Connecting the cables 8
- Software enabling the NTMW04 card 9

Programming basic PRI/DTI 10

Programming PRI 10
- Prerequisites 10
- Restrictions and Limitations 10
- Programming procedures 10

Programming DTI 20
- Compatibility 20
- Restrictions and Limitations 20

Programming procedures 20

Features description and implementation 25

64 kbps Clear Data Transport 26
Backup D-Channel 26
Basic Call Service 27
Call Connection Limitations 29
Call Forward All Calls/No Answer 30
Call Pick-Up 31
Calling Line Identification 31
Calling Line Identification in Call Detail Record (CCDR) 34
Calling Party Privacy 34
Coordinated Dialing Plan 46
Data Packet Network Access X.25 46
DCH Error Reporting and Monitoring 47
Direct Inward System Access (DISA) 49
Display of Calling Party Denied 49
E.164/ESN Numbering Plan Expansion 57
Electronic Lock Network Wide/Electronic Lock on Private Lines 74
ESN on PRI 86
Flexible Night Service 88
Idle Extension Notification 88
In-Band ANI; (Automatic Number Identification) 91
Incoming Trunk Programmable Calling Line Identification 91
ISDN Calling Line Identification enhancements 94
Integrated Trunk Access (ITA) 125
ISDN Networking: Advanced Network Services 126
ISDN Signaling Package 127
Option11C Compact PRI to DMS-100 127
Meridian Mail Trunk Access Restriction 128
Network Alternate Route Selection 136
Network Call Party Name Display (NCPND) and Network Name Delivery (NND) 136
Network Call Redirection (NCRD) 139
Network Call Transfer and Attendant Extended Calls 140
Network Hunt 140
Network Intercom (Hot Type D Enhancement) 140

Non-Associated Signaling Channels (nB+D) 144
Primary Rate Access Package 144
T309 Timer 144
Trunk Anti-Tromboning 146
Trunk Optimization (Option11C Compact to Option11C Compact only) 182
Trunk to Trunk Connection 184

PRI/DTI maintenance 189

Maintenance overview 189

Monitoring Option11C Compact DTI/PRI operation 190
Maintenance messages 190
Alarms 193
NTMW04 faceplate LEDs 194
Monitor Jacks 195

Option11C Compact TMDI maintenance commands 196
TMDI maintenance commands 196
NTMW04 DTI/PRI power on self-test 198
MTMW04 DTI/PRI local self-test 198
Remote Loopback and remote self test 199
DTI/PRI error detection 203
Frame slip 205
Frame slippage improvement timers 210
Frame alignment 211

Replacing the MTMW04 DTI/PRI card 215

Clocking 217

Clocking in a Digital World 217
The Need for Synchronization 217
Synchronization Methods 218
Frame Slip 218

Guidelines 220

Appendix A - BARS/NARS 223

Introduction 223

Network class of service 226
Facility Restriction Level 227
Expensive Route Warning Tone 228
Queuing features 228

Basic/Network Alternate Route Selection 228
Uniform dialing plan 229
UDP for on-net calling 229
UDP for off-net calling 230
BARS access code 235
NARS access codes 235
Network translation 236
Automatic least-cost routing 237
Digit manipulation 239
Time-of-Day routing 240

Flexible ESN “0” Routing 241
Automatic on-net to off-net overflow 241
Multiple DID Office Code Screening 242
Incoming trunk group exclusion 243
Off-net number recognition 244
Supplemental digit restriction (release dependent) 245
Digit translation / restriction / recognition 246
Free Calling Area Screening 250
Expensive Route Warning Tone 251
BARS or NARS bypass control 251
Network Speed Call 252
1 + dialing 255

Network control 255
Option 11C Compact Main NCOS 256
Option 11C Compact node TCOS 256
Compatibility with ETN switches 257

Network signaling 258
Satellite Link Control 260
Routing control 261
NCOS map 262
Invoking Routing Control 262

Network traffic measurements 263

TFN001 routing measurements 263
OHQ measurements 264
CBQ measurements 264
TFN002 NCOS measurements 264
TFN003 incoming trunk group measurements 264
BARS implementation 265
Configuring BARS 266
NARS implementation 275
Configuring NARS 275

About this guide

This guide provides information on the 1.5Mb ISDN Primary Rate Interface and Digital Trunk Interface component of Meridian 1 Option11C Compact.

> ***Note:*** Throughout this document, Meridian 1 Option11C Compact will be referred to Option 11C Compact.

The “PRI/DTI implementation” chapter provides information on how to program basic PRI/DTI connectivity for Basic Call service.

The “Features description and implementation” chapter provides descriptive information, and where applicable, implementation procedures on the Inter-Office Communications package of features supported on Option11C Compact.

The “PRI/DTI maintenance” chapter provides a maintenance guidelines and procedures for a Option11C Compact system.

The “Clocking” chapter provides network clocking information that applies to Option11C Compact.

Appendix A provides general information on Basic Alternate Route Selection (BARS) and Network Alternate Route Selection (NARS) features for on a Option11C Compact system.

PRI/DTI implementation

Overview

This chapter provides the information required to install PRI/DTI on a Option11C Compact system:

— hardware and software installation

— programming procedures for basic call service.

While either the hardware or software may be installed first, the PRI/DTI cannot be enabled and tested until both are completed.

This chapter covers the most common type of Nortel's PRI/DTI installation, which is a 23B+D Primary Rate Interface (PRI) installation, or a 24-channel Digital Trunk Interface (DTI) installation between:

— two Option11C Compact systems

— an Option11C Compact and a Meridian 1

— an Option11C Compact and a compatible Central Office

This chapter builds on the ESN programming that is assumed to be already in place. The installation technician should have a basic understanding of NARS and CDP. (See Appendix A for additional information on NARS).

The related ISDN features are treated individually in the chapter called *Features Description and Implementation.*

Note: An Option11C Compact system cannot be positioned as a tandem node in a pure Option11C Compact network. Tie trunks are blocked from dialling other Tie trunks, or from being routed to other Tie trunks. Call modification (via transfer or conference) from a set or attendant is allowed over a Tie to Tie connection, but call redirection (for example, via Call Forward, Call Forward No Answer, or Hunting) is blocked.

The impact of these restrictions is that a network comprising a Option11C Compact switches must be fully connected, that is, each node must have a direct connection to each other node. Referring to Figure 1, the following connections are allowed/not allowed:

- A to B, B to A - allowed
- B to C, C to B - allowed
- A to C, C to A - not allowed
- A to CO, CO to A - allowed
- C to CO, CO to C - allowed

Figure 1
Allowable Murray Entrepreneur network connections

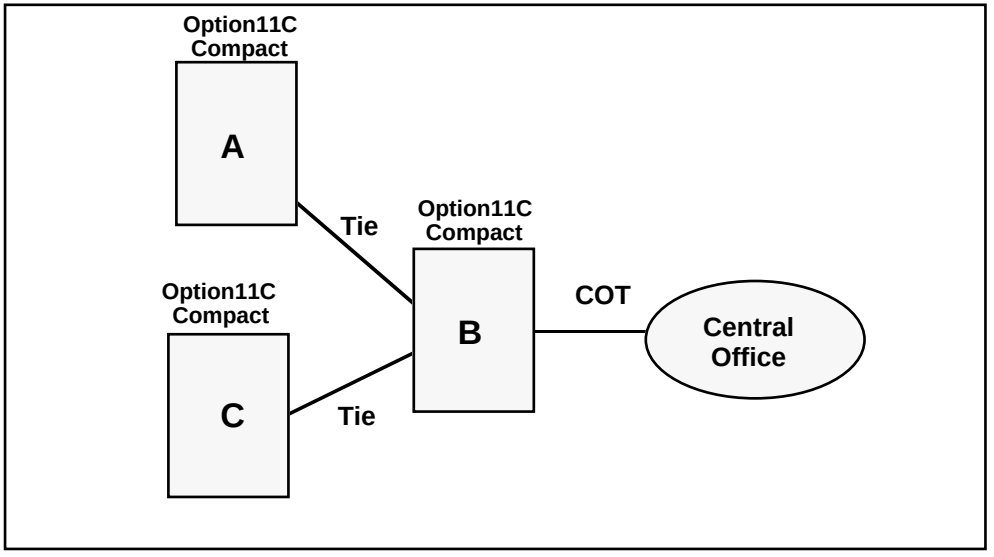

Hardware Requirements

To implement PRI/DTI on the Option11C Compact, the following hardware is required.

Card

The NTMW04 card with integrated D-Channel Handler and Clock recovery capabilities.

Cables

The following cables are required for PRI/DTI connections:

- NTMW37 carrier cable
- NT8D97 50 foot extension (if needed)

Channel Service Units

When connecting the PRI/DTI to the public network, CSUs are required. One CSU is required per PRI. Suitable CSUs which support 64 Kbps clear and Bipolar 8 Zero Substitution (B8ZS) are available from vendors such as Verilink, Digitalink, Kentrox and Tellabs.

> ***Note:*** Contact your Northern Telecom Sales representative for specific local CSU requirements.

Echo Canceller

Echo Cancellers are required for voice calls over direct satellite links using PRI/DTI.

> ***Note:*** Echo Canceller control is currently not supported on Option11C Compact.

Hardware description

NTMW04 DTI/PRI circuit card

The NTMW04 Digital Trunk Interface/Primary Rate Interface (DTI/PRI) card provides the physical interface for the DS-1 facility T-1 carrier on the Option11C Compact. It is required for PRI and DTI operation.

The NTMW04 card can occupy slot 1, 3, or 5 in the Option11C Compact main cabinet.

Clock recovery circuitry

Digital Trunking requires synchronized clocking so that a shift in one clock source will result in an equivalent shift of the same size and direction in all parts of the network. On Option11C Compact systems, synchronization is accomplished with the integrated clock recovery circuitry on the NTMW04 DTI/PRI card.The clock recovery circuitry synchronizes the Option11C Compact system to an external reference clock, and generates and distributes the clock to the system. Option11C Compact can function either as a slave to an external clock or as a clocking master. See the chapter called *Clocking* for more details on network clocking principles.

Clocking modes

Option11C Compact supports a single clock recovery circuitry that can operate in one of two modes: tracking or non-tracking (also known as free-run).

Tracking mode

In tracking mode, the NTMW04 DTI/PRI card supplies a primary clock reference (no secondary reference is provided). The primary reference (PREF) source is defined in Overlay 73.

There are two stages to clock controller tracking:

— tracking a reference, and

— locked onto a reference.

When tracking a reference, the clock recovery circuitry uses an algorithm to match its frequency to the frequency of the incoming clock. When the frequencies are very near to being matched, the clock recovery circuitry is locked onto the reference. The clock recovery circuitry will make small adjustments to its own frequency until both the incoming and system frequencies correspond.

If the incoming clock reference is stable, the internal clock recovery circuitry will track it, lock onto it, and match frequencies exactly. Occasionally, however, environmental circumstances can cause the external or internal clocks to drift.

Free-run (non-tracking)

In free-run mode, the clock recovery circuitry does not synchronize on any source, it provides its own internal clock to the system. This mode can be used when Option11C Compact is used as a master clock source for other Option11C Compact systems in the network. Free-run mode is undesirable if the Option11C Compact is intended to be a slave. It can occur, however, when the primary clock source is lost due to hardware faults or when invoked by using software commands.

Clock controller LED states

The clock controller LED on the NTAK09 faceplate will be in various states, depending on the status of the clock controller:

LED	Clock recovery
On (Red)	Clock recovery circuitry is disabled.
On (Green)	Clock recovery is circuitry is enabled, and is automatically locked onto the reference.

Installing PRI/DTI hardware

The NTMW04 DTI/PRI card is a half-size peripheral equipment circuit card that is installed in the Option11C Compact main cabinet. It provides ISDN primary rate interface and digital trunk interface capability. The NTMW04 also has an integrated D-Channel Handler Interface and clock recovery circuitry.

Inserting the NTMW04 into the main cabinet

Insert the NTMW04 circuit card into card slot 1, 3, or 5 in the Option11C Compact main cabinet.

Check for available card slots in the base cabinet and print the configuration record to determine which slots may be used. To do this, use PRT CFN in LD22.

Connecting the cables

Connect the NTMW37 cable to the 15-pin connector on the NTMW04 faceplate. Connect the other end of the cable to the CSU or DSX-1 cross connect.

The NTMW37 is twenty feet long. If additional distance is required, the NT8D97AX fifty-foot extension is available up to a 600 foot maximum.

Refer to the table below for pinout information on the NTMW37 cable.

Table 1
DS-1 line interface pinout for NTMW37 cable

to DB-15	signal name	description
pin 1	T	transmit tip to network
pin 9	R	transmit ring to network
pin 2	FGND	frame ground
pin 3	T1	receive tip from network
pin 11	R1	receive ring from network

Software enabling the NTMW04 card

Use step 1 to enable NTMW04 DTI/PRI card. If the clock controller and D-channel interface are not enabled in step 1, go to step 2.

Note: DCHI is not required for a DTI installation.

Step 1

— Software enable all NTMW04 DTI/PRI cards using LD 60:
ENLL C

where C is the DTI/PRI card number (DLOP). The card number associated with a DTI/PRI card is based on the slot in which the card is installed (1, 3, or 5).

Note: The DCHI and PRI loops must be programmed prior to software enabling the NTMW04. Refer to the section "Programming Meridian 1 to Meridian 1 PRI/DTI" for further information.

— Under normal conditions, this step enables the clock controller and D-Channel interface capability of the NTMW04. If enable fails, go to step 2.

Step 2: (if required)**:**

Software enable the NTMW04 clock recovery capability using overlay 60. Enable clock tracking on primary digital loop by issuing the following command:

ENL CC 0

— Software enable the NTMW04 DCHI capability using overlay 96 command

ENL DCHI N

(where N is the DCHI I/O address).

— Within about 30 seconds, the D-Channel layer 3 should be established. To confirm, request the current status of the D-Channel by issuing the command

— The system should respond **DCH N EST OPER**, meaning that the D-Channel is established and operational.

Programming basic PRI/DTI

This section describes how to program basic PRI/DTI between two Option11C Compact systems, or between a Option11C Compact system and a Central Office. Please note that the programming requirements vary slightly for PRI and DTI.

Programming PRI

Prerequisites

PRI loops must be configured before defining the DCH links or PRI applications. Note that in the following procedure, the bold responses must be entered for proper operation of Meridian 1 to Meridian 1 PRI. Prompts which do not show a response can be left at default.

Restrictions and Limitations

The allowable range of main-cabinet slot numbers for the DTI/PRI circuit card is 1, 3, or 5.

Service change and maintenance commands that refer to loop numbers refer to slot numbers in the Option11C Compact system.

Programming procedures

The following procedures are required to implement a PRI connectivity.

1 Define error detection thresholds and Clock synchronization using LD73.

2 Add a PRI loop and the T1 Transmit Equalization, using LD17.

3 Add a NTMW04 card to support the downloadable D-Channel Handler Interface function, using LD17.

4 Define a PRI customer using LD15.

5 Define a PRI service route using LD16.

6 Define service channels (B-channels) PRI trunks using LD14.

7 Define clock synchronization using LD73.

Step 1

Define the threshold parameters and Clock synchronization. Use **Overlay 73**.

Prompt	Response	Description
REQ	NEW CHG	Add new data. Change existing data.
TYPE	DDB	Digital Data Block.
TRSH	0-15	Assign a threshold set or table.
RALM	1-(3)-128	Yellow alarm 24-hour threshold.
BIPC	1-(2)-128	24-hour bit rate violation threshold.
LFAC	1-(3)-128	24-hour loss of frame alignment threshold.
BIPV	1-(3)-4 1-(2)-4	Bit rate (bipolar violation and CRC) monitoring limits for maintenance and out-of-service thresholds.
SRTK	1-(5)-24 1-(30)-3600	Frame slip-tracking-monitoring limits (in hours).
SRNT	1-(15)1024 1-(3)-1024	Non-tracking slip-rate monitoring maintenance and out-of-service thresholds.
LFAL	1-(17)-10240 1-(511)-10240	Loss of frame alignment monitoring limits.
SRIM	(1)-127	Slip rate improvement timer.
SRMM	1-(2)-127	Maximum number of times the slip rate exceeds the maintenance limit.

Step 2

Add a PRI loop, and the T1 Transmit Equalization. Use **Overlay 17**.

Prompt	Response	Description
REQ	CHG	Change existing data.
TYPE	CEQU	configuration data block
DLOP	**C** dd ff	where: • C is the DTI/PRI digital card number (1, 3, or 5) • dd is the number of data calls allowed (0-24) on this PRI (default 24) • ff is the frame format used (D2,D3,D4,ESF) where default is ESF
MODE	PRI	Select Primary Rate Interface mode
LCMT	B8S AMI	Zero code substitution method — must match the far-end and facility equipment B8S--B8ZS code substitution and AMI--B7 code substitution rule. The preferred method is B8ZS to get 64 K clear channel as long as the T1 carrier equipment supports it.
YALM	DG2 (FDL)	Yellow alarm method — prompted only if the frame format is ESF — Must match the far end**.** Use FDL with ESF and use DG2 with non-ESF. If not prompted, then DG2 is set automatically.
T1TE	(0),1,2,3	T1 Transmit Equalization. 0 (default) = 0-133 ft. 1 = 134-266 ft. 2 = 267-399 ft. 3 = 400-655 ft.
TRSH	0-31	The maintenance and out-of-service threshold set to be used for this PRI loop, as configured in Overlay 73.

Step 3

Add a D-Channel Interface. Use **Overlay 17**.

Prompt	Response	Description
REQ	CHG	Change data.
TYPE	CFN	Configuration Data Block
ADAN	NEW DCH 1-15 CHG DCH 1-15 OUT DCH 1-15	Add a primary D-Channel port number. Any unused SDI port number Change a primary D-Channel Out the primary D-Channel
CTYP	MSDL	DCHI for D-Channel configuration on the NTMW04 DTI/PRI card..
CDNO	1, 3, 5	Card slot number to be used as the primary DDCH/DCHI.
PORT	1	PORT must be set to "1"
DES	<CR>	Back-up DCHI port number, if required
USR	PRI	D-channel is for ISDN PRI only.
IFC	SL1	Interface type is Meridian 1 - Meridian 1
DCHL	1, 3, 5	PRI card number which will be carrying the D-channel. Must match entry made for the "CDNO" prompt above
OTBF	1-(16)-127	number of output request buffers. Note: for a single PRI link, leave this prompt at default (16). Add 5 output request buffers per additional link.
SIDE	NET (USR)	Prompted only if IFC is set to SLI. Default is set to slave. NET = network, the controlling switch USR= slave to the controller

Prompt	Response	Description
RLS	XX	Software release of far-end. This is the current software release of the far end. If the far end has an incompatible release of software, it prevents the sending of application messages. Enter X27 for Option11C Compact.
OVLR	<CR>	Allow or disallow overlap receiving on a D-channel. Default is NO.
LAPD	YES,(NO)	change LAPD parameters. Enter carriage return if timers are to be left at default. The following timers are prompted only if LAPD is set to YES. (They can all be left at default during initial set-up.)
T23	1-(20)-31	interface guard timer checks how long the interface takes to respond. In units of 0.5 seconds (default 20 = 10 seconds).
T200	2-(3)-40	retransmission timer in units of 0.5 seconds (default 3 = 1.5 seconds).
N200	1-(3)-8	maximum number of retransmissions
N201	4(260)	maximum number of octets in information field
K	1-(7)-32	maximum number of outstanding unacknowledged frames (NAKS)

Step 4

Define a PRI customer. Use **Overlay 15**.

Prompt	Response	Description
REQ	NEW CHG	Add new data. Change existing data.
TYPE	NET	Networking data.
CUST	0	Customer number
LDN0	xxxx	Listed Directory number 0 must be defined for ISDN PRI DID service. The length of LDN0 determines the number of trailing digits translated as the dialed DN on PRI DID routes. Up to seven digits may be entered if DNXP option 150 is equipped. Otherwise, up to four digits may be entered.
AC2		ESN Access Code 2. Enter incoming ISDN call types (NARS network translation types) for which AC2 must be inserted when INAC = YES in LD 16 Route Data Block. Multiple responses are allowed. Prompted only if NARS is equipped. If a NARS call type is not entered here, it is defaulted to AC1.
	NPA	E.164 National
	NXX	E.164 Subscriber
	INTL	International
	SPN	Special Number
	LOC	Location Code
ISDN	YES	customer is equipped with ISDN
PNI	1	Private Network Identifier. Each customer data block must have a unique PNI when multi-customer option is equipped. PNI = 1 is typical for CUST = 0. It must be matched by the PNI in the far-end RDB.

Prompt	Response	Description
HNPA	NPA	telephone area code. Sent as part of setup message as calling line identification.
HNXX	NXX	telephone local exchange code. Sent as part of setup message as calling line identification.
HLOC	XXX	home location code (NARS). Prompted when PRA = YES
LSC	1-9999	One to four digit Local Steering Code, if required in the Coordinated Dialing Plan (CDP). LSCs are required only if the CDP DNs are longer than the local PDNs. The CLID sent for a CDP call is composed of the LSC defined in LD 15 plus the PDN of the calling set. Various ISDN network features depend on the CLID as the “return address” for sending feature control messages. Multiple LSCs can be defined in LD 87 for CDP, but only one LSC can be defined here for CLID.

Step 5

Configure an ISDN service route. Use **Overlay 16**.

Prompt	Response	Description
REQ	NEW CHG	Add new data. Change existing data.
TYPE	RDB	Route Data Block
TKTP	XXX	TIE trunk type.
DTRK	YES	Digital trunk route
DGPT	PRI	ISDN (23B + D)— prompted only if PRA = YES in LD15
ISDN	YES	ISDN option
MODE	PRA	Route used for PRA only
PNI	1	Private Network Identifier. Each customer data block must have a unique PNI when multi-customer option is equipped. PNI = 1 is typical for CUST = 0. It must be matched by the PNI in the far-end RDB.
IFC	SL1	interface type for Option11C Compact to Option11C Compact.
CHTY	BCH	signalling type - prompted if DTRK is YES. D-Channel signalling for B-channels.
CTYP	<CR>	Call Type. Enter the call type to be associated with the outgoing route for direct dialing using the trunk access code (instead of NARS access code).

Prompt	Response	Description
INAC	YES	Insert ESN Access Code based on NARS/BARS call type, for incoming calls on TIE routes only. If NARS is equipped, this feature inserts AC1 or AC2, depending on the responses to AC2 in LD 15 Customer Data Block. For NARS/BARS call types, INAC bypasses incoming digit insertion specified by INST in LD 16 Route Data Block. Unknown call types, including CDP steering codes, are not affected by INAC, and do not bypass digit insertion specified by INST.

Step 6

Configure the ISDN trunks. Use **Overlay 14**.

Prompt	Response	Description
REQ	NEW CHG NEW XX	Add new data. Change existing data. When assigning several members at once (i.e. a full T-1) use the multiple create command NEW XX.
TYPE	xxx	Trunk type.
TN	C ch	Enter the DTI/PRI trunk card (C) and channel number (ch). C = 1, 3, 5, ch = 1-24
RTMB	RRR MMM	Route (created in step 5) (RRR) and member number (MMM).
INC	(YES), NO	For MULTIPLE NEW command: If yes, channel numbers will be associated with members starting at the TN, both channel and member numbers increasing. If no, member numbers decrease as channel numbers increase.

Step 7

Assign clock reference source. Use **Overlay 73**.

Prompt	Response	Description
REQ	CHG	Change data.
TYPE	DDB	Digital Data Block.
CLKN	1, 3, 5	Card slot number of the NTMW04 card.
PREF	1-9	This is the PRI T1 which the clock controller will use as it's primary source to synchronize (track) the system network clock. This response must be the same as the response to the CLKN prompt above, otherwise an SCH will be printed. A carriage return <CR> here signifies the system will operate in free-run (non-tracking). Note that free-run is used when this Option11C Compact PBX serves as the clock source master for the private network.

Programming DTI

Compatibility

The NTMW04 card supports DTI with Extended Superframe Format (ESF). ESF provides a Cyclic Redundancy Check (CRC) which is a block error code comparison for deriving performance measurement.

Restrictions and Limitations

The allowable range of main-cabinet slot numbers for the NTMW04 DTI/PRI circuit card is 1, 3, 5. Service change and maintenance commands that refer to loop numbers refer to slot numbers in the Option11C Compact system.

Programming procedures

The following procedures are required to implement a DTI connectivity between a Option11C Compact to Option11C Compact configuration.

1 Define error detection thresholds using LD73.

2 Add a DTI loop and the T1 Transmit Equalization, using LD17.

3 Define the Route Data Block for the DTI using LD16.

4 Define the trunks associated with step 3 using LD14.

5 Define clock synchronization using LD73.

Step 1:

Define the threshold parameters. Use **Overlay 73**.

Prompt	Response	Description
REQ	NEW	Add new data.
TYPE	DDB	Digital Data Block.
TRSH	0-15	Assign a threshold set or table, enter this number in overlay 17 when defining a PRI digital loop.
RALM	1-(3)-128	Yellow alarm 24-hour threshold.
BIPC	1-(2)-128	24-hour bit rate violation threshold.
LFAC	1-(3)-128	24-hour loss of frame alignment threshold.
BIPV	1-(2 or 3)-4	Bit rate (bipolar violation and CRC) monitoring limits for maintenance and out-of-service thresholds.
SRTK	1-(5)-24	Frame slip-tracking-monitoring limits (in hours).
SRNT	1-(15)1024 1-(3)-1024	Non-tracking slip-rate monitoring maintenance and out-of-service thresholds.
SRIM	(1)-127	Slip rate improvement timer.
SRMM	(2)-127	Maximum number of times the slip rate exceeds the maintenance limit.
LFAL	1-(17)-10240 1-(511)-10240	Loss of frame alignment monitoring limits.

Step 2

Add a DTI loop, and the T1 Transmit Equalization. Use **Overlay 17**.

Prompt	Response	Description
REQ	CHG	Change existing data.
TYPE	CFN	Configuration Data Block
...		
PARM	YES	Change parameters.
...		
PCML	(MU) A	System PCM law. Default is MU law
...		
CEQU	YES	Changes to common equipment
DLOP	**C** dd ff	C is the DTI/PRI digital card number (1, 3, 5). dd is the number of data calls allowed (0-24) on this DTI (default 24) ff is the frame format used (D2,D3,D4,ESF) where default is ESF
MODE	TRK	Select Digital Trunk Interface mode
YALM	DG2 (FDL)	Yellow alarm method — prompted only if the frame format is ESF — **Must match the far end.** Use FDL with ESF and use DG2 with non-ESF. If not prompted then DG2 is set automatically.
T1TE	(0),1,2,3	T1 Transmit Equalization. 0 (default) = 0-133 ft. 1 = 134-266 ft. 2 = 267-399 ft. 3 = 400-655 ft.
TRSH	0-15	The maintenance and threshold table to be used for this DTI loop, as configured in overlay 73.

Step 3

Configure a DTI trunk route. Use **Overlay 16**.

Prompt	Response	Description
REQ	NEW CHG	Add new data. Change existing data.
TYPE	RDB	Route Data Block
TKTP	xxx	Trunk route type.
DTRK	YES	Digital Trunk Route

Step 4

Configure the trunks. Use Overlay 14.

Prompt	Response	Description
REQ	NEW CHG	Add new data. Change existing data.
TYPE	XXX	One of the trunk types defined in step 3
TN	C ch	enter the DTI/PRI trunk card (C) and channel number (ch). C = 1, 3, 5 ch = 1-24
RTMB	RRR MMM	Route (created in step 3) (RRR) and member number (MMM).

Step 5:

Assign clock reference source. Use **Overlay 73**.

Prompt	Response	Description
REQ	CHG	Change data.
TYPE	DDB	Digital Data Block.
CLKN	1, 3, 5	Card slot number of the NTMW04 card.
PREF	1-9	This is the PRI T1 which the clock controller will use as it's primary source to synchronize (track) the system network clock. This response must be the same as the response to the CLKN prompt above, otherwise an SCH will be printed. A carriage return <CR> here signifies the system will operate in free-run (non-tracking). Note that free-run is used when this Option11C Compact PBX serves as the clock source master for the private network.

Features description and implementation

This chapter provides descriptive information, and where applicable, implementation procedures on the Inter-Office Communications package of features supported on Option11C Compact systems.

64 kbps Clear Data Transport

ISDN PRI supports clear 64 kbps data transport on each B-channel. Connections from a Option11C Compact system to another Option11C Compact system, SL-100, DMS-100, or other Central Office switch are supported over 64K clear transmission.

Package Requirements

This feature requires the following software packages:

ISDN	package 145
DTI	package 75
PRI	package 146

Backup D-Channel

In order to increase the reliability of the D-Channel and enhance the serviceability of the Primary Rate Interface, a secondary or backup D-Channel is supported. The Backup D-Channel feature provides redundancy for the NTMW04 D-Channel Handler Interface (DCHI) capability.

Because the DCHI is so important to customer trunking requirements, an additional D-Channel Handler Interface can be configured so that automatic switchover to the backup DCHI occurs in the case of primary D-Channel failure. This exercise requires co-ordination with the far end to ensure that the backup D-Channel is properly configured and identified.

When the backup D-Channel is configured, one D-Channel is active and the other one acts as a backup. If the active D-Channel fails, the auto-recovery software will first attempt to recover the primary D-Channel. If the recovery is successful, the D-Channel goes back into operation. However, if this recovery does not take place, software switches the D-Channel messaging to the backup D-Channel on a different PRI link. If the active backup D-Channel fails after the problem with the primary D-Channel has been resolved, the auto recovery software will automatically switch back to the primary D-Channel. During the switchover procedure, established calls will remain intact; transient calls, however, may be dropped.

The Recovery to Prime feature (RCVP) is a service changeable option which, if selected, will automatically changeover to the primary D-Channel whenever the primary D-Channel becomes established due to autorecovery or a maintenance command.

The backup D-channel conforms to the Meridian Customer Defined Networking (MCDN) protocol and AT&T's TR41449 and TR41459.

Package Requirements

The Backup D-Channel feature is part of the basic ISDN option package, the requirements are as follows:

ISDN	package 145
PRI	package 146
ISL	package 147

Basic Call Service

ISDN basic call service transmits the ISDN call and consists of call progress signaling and voice or data transmission.

Three types of numbering plans are supported: Coordinated Dialing Plan (CDP), North American 10-digit numbering plan (E.164), and Uniform Dialing Plan (UDP).

Basic call service is supported for the following switch interfaces:

— Option11C Compact to Option11C Compact

— Option11C Compact to Meridian 1/SL-1

— Option11C Compact to Meridian SL-100

— Option11C Compact to DMS-100

— Option11C Compact to DMS-250

— Option11C Compact to DMS Centrex

— Option11C Compact to AT&T #4ESS

— Option11C Compact to AT&T #5ESS

Call Progress Signaling

PRI supports 64 Kbps out-of-band signaling on the D-Channel for:

— call set-up

— call tear down

— feature activation

— local busy and reorder tones.

Messages to generate local tones are transmitted on the D-Channel. Both out-of-band messages and in-band tones are provided for ringback.

Voice or data transmission

Voice and high speed (64 kbps) data are transmitted on the B-channel and assigned on a per call basis. The following modes of transport are available:

— 56 Kbps circuit switched data transmission

— 64 Kbps circuit switched voice or data transmission

Numbering plans

Three numbering plans are supported:

— Coordinated Dialing Plan (CDP) of 3 to 10 digits

— North American 10-digit numbering plan (E.164)

— Uniform Dialing Plan (UDP) which includes the Electronic Switched Network (ESN) 7-digit private numbering plan with 3-digit NARS location codes.

Typically, the numbering plan for a customer's private network consists of a 3-digit location code, such as the ESN number, and a 4-digit extension. This allows the same extension to be used for private networks and for Direct Inward Dialing (DID) from the public network.

Package Requirements for Basic Call Service

Basic Call Service requires the following:

ISDN	package 145
PRI	package 146

Call Connection Limitations

The Call Connection Restriction product improvement allows limiting conditions to be placed on call connections across the ISDN. Call configurations which would degrade transmission integrity or network performance are prevented.

The following conditions are placed on network call connections:

— No more than one trunk without disconnect supervision can be used in a call connection. Otherwise, trunk lock-up could occur within the network. (This also applies to call-joined connections. Two call connections cannot be joined if each makes use of a trunk without disconnect supervision.)

— Tandem nodes are limited, to prevent potential transmission problems. The maximum number of tandem nodes to be allowed in a call connection can be set between 0 and 31, by way of service change.

— PSTNs can be limited. If so specified, only a single PSTN is permitted in a call connection; or, an unlimited number of PSTNs can be allowed.

— μ/A-Law conversions are limited, to prevent potential transmission problems. The maximum number of conversions to be allowed in a call connection can be set between 0 and 31, by way of service change.

— Satellite delays are limited. The maximum number of Satellite delays to be allowed in a call connection can be set between 0 and 5, by way of service change.

These call limitations only apply within an ISDN environment. For this product improvement to be effective, ISDN connectivity must be available between the originating and terminating nodes.

With the use of multiple call transfers, conferencing and other manipulations, it is possible to bypass this product improvement’s control of the number of unsupervised trunks in a call connection. In these situations, other ISDN call-connection limitations may also be overcome.

The Call Connection Restriction product improvement overrides the Satellite Link Control feature. Whereas the Satellite Link Control feature limited the number of Satellite access lines or intermachine trunks to one, the Call Connection Restriction product improvement allows this limit to be service-changeable.

When calls are joined, it is possible to produce a call connection which violates some of the call-connection restrictions. Under these conditions, it is possible to exceed the limits on tandem nodes, μ/A-Law conversions and network call redirections.

Call Forward All Calls/No Answer

Call Forward All Calls and Call Forward No Answer enable callers to manually forward or forward on a no answer to any other station on the ISDN network. The receiving location is provided with the dialed number, the calling number, and if CPND is optioned, the caller’s name plus the reason for the redirection. The caller's display is also updated to show the name and number of the person the call was redirected to plus the reason for the redirection.

This feature is applicable to the following telephones for Name and Number display:

— M2250 Attendant Console

— Meridian digital sets equipped with digit display:

- M2006
- M2008
- M2216
- M2616

Package Requirements

The package requirements are as follows:

Digit Display	package 19
ISDN	package 145
PRI	package 146
Calling Party Name Display	package 95

Call Pick-Up

If an incoming ISDN call is answered using the Call Pick-Up Feature, the displays for the originating and terminating sets will be updated to indicate the correct connected party as well as the reason for redirection.

Calling Line Identification

Calling Line Identification (CLID) is a feature that delivers the calling party's telephone number to the called party's telephone set across the ISDN network. The CLID display lasts for the duration of the call.

The CLID display feature is supported for the following switch configurations:

— Option11C Compact to Option11C Compact

— Option11C Compact to DMS-100

— Option11C Compact to SL-100

CLID supports both outgoing and incoming calls as follows:

Outgoing Calls

The calling party number that is sent out with the call SETUP message on the D-channel is based on:

— the numbering plan (private or public);

— the customer option configured in the Customer Data Block (LD 15), either Prime Directory Number (PDN) or Listed Directory Number (LDN);

Note: An attendant console can only be assigned an LDN.

— the class of service (COS) assigned to the set calling set.

If the numbering plan is private, the PDN is sent, regardless whether PDN or LDN is configured as the customer option.

If the numbering plan is public:

— if the customer option is set to LDN, then the set's Listed Directory is sent;

— if the customer option is set to PDN, either the Prime Directory Number or Listed Directory Number is sent, depending on the class of service (COS) assigned to the calling set in LD 10 or LD 11.

For private network calls, the calling party number consists of either the Electronic Switched Network (ESN) location code and the DN or the Coordinated Dialing Plan (CDP) DN. If the Prime DN is less than four digits, zeros are appended to create a four digit DN. If it is more than four digits, the last four numbers are used to identify the DN. For public network calls, it is the standard North American Numbering Plan seven or ten digit number.

Incoming Calls

For incoming calls across the ISDN network, the CLID received over the D-Channel is displayed instead of the trunk route access code and trunk member number.

The following devices, if equipped with a digit display, can receive and display a CLID number:

— Attendant Consoles

— Digital sets equipped with digit display

— ASCII terminals with data adapter such as ADM or programmable data adapter.

The digit display contents are described as follows:

— If the CLID display is unavailable because the call was not routed on ISDN routes, the trunk route access code and the trunk route member number are displayed. Note that Dialed Number Identification Service (DNIS) digits may be displayed as well if proper software is equipped.

— For public networks, the CLID displays the Standard North American Numbering Plan 10-digit number.

— For a private network with NARS, the CLID display is preceded by the letter “H”, followed by the ESN Home Location Code and the user's extension number or the customer's Listed Directory Number.

— For a private network with CDP, the CLID display is preceded by the letter “H”, followed by the user's CDP directory number or the customer's Listed Directory Number.

Figure 1
Digit Display format for CLID

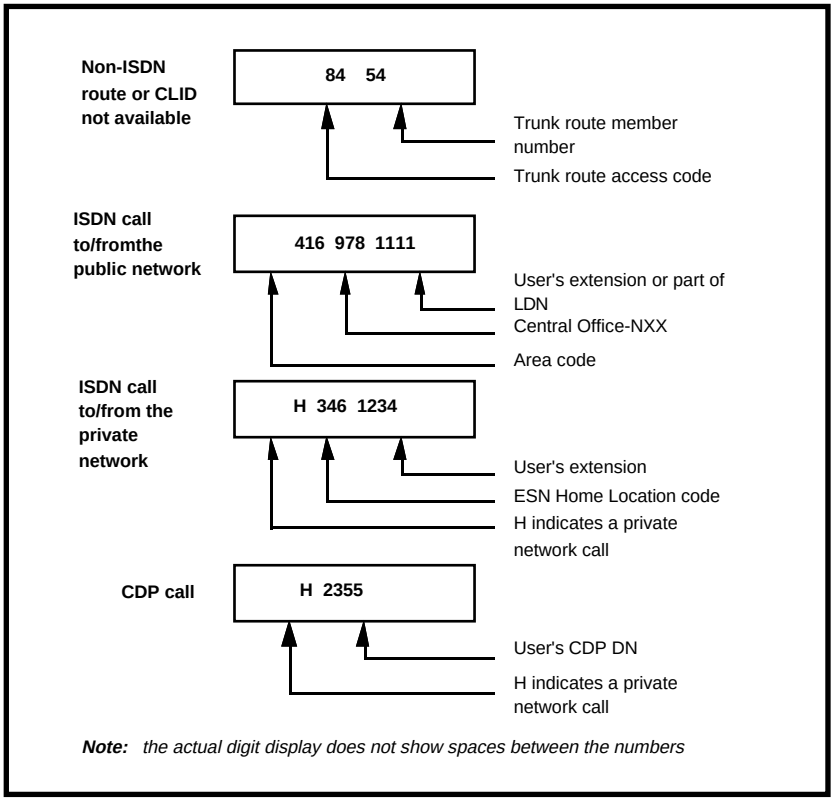

Package Requirements

Calling Line Identification requires the following:

ISDN	package 145
PRI	package 146
Digit Display	package 19

Calling Line Identification in Call Detail Record (CCDR)

This service provides the addition of a Calling Line Identification (CLID) field in the Call Detail Record (CDR). The addition of the CLID field will allow customers to charge back the calling party for services rendered in connection with their incoming calls. For example, calls placed to a service center may be charged back to departments receiving the service.

Package Requirements

CDR package requirements are as follows:

ISDN	package 145
PRI	package 146
CLID in CDR	package 118

Calling Party Privacy

The Calling Party Privacy (CPP) feature enables the Option11C Compact to support the blocking of a Calling Party's Number and Name from being displayed at the terminating set on a per-call basis. Users can dial a Calling Party Privacy code (e.g., *67 from a Option11C Compact digital set) to prevent their telephone number and name from being displayed on a receiving telephone across the Public Switched Telephone Network (PSTN). Internal calls within the Option11C Compact will have originating numbers or names displayed even though the originating call has requested privacy.

This feature also allows a per-line blocking Class of Service to be programmed for station sets for public network calls. This relieves the user from having to dial the Flexible Feature Code (FFC) for every call, but in every other way is equivalent to the per-call blocking.

Depending on the trunk route configuration, public network numbers which tandem over the Meridian Customer Defined Network (MCDN), prior to exiting to the PSTN, Privacy Indicator will be passed along if dialed by the originator. This means that users can be sure that their privacy wishes are respected whether the call exits directly at the originating node, or is given alternate routing through a private network. However, if private network nodes are connected by non Integrated Services Digital Network (ISDN) Electronic Switched Network (ESN) trunks, the complexity of the signaling precludes the transmission of the Privacy Indicator. To compensate for this, outgoing Central Office (CO), Foreign Exchange (FEX), Wide Area Telephone Services (WATS), and Direct Inward Dialing (DID) trunks, may be configured to automatically generate a Privacy Indicator for calls received from incoming non-ISDN trunks.

A Privacy Indicator is used to signify that a call is a Calling Party Privacy call. For an ISDN call between two Option11C Compact switches, the Privacy Indicator is represented by setting the Presentation Indicator field to “Presentation Restricted” in the Calling Party Number Information Element (IE) and the Calling Party Name Display (CPND) Indicator to “Presentation Denied” in the Display IE. For an outgoing ISDN call to the Public Exchange/Central Office, the Privacy Indicator is represented by setting the Presentation Indicator field to “Presentation Restricted” in the Calling Party Number IE and excluding the Display IE with the CPND information. An incoming ISDN call is marked as a CPP call (i.e., carries the Privacy Indicator) if the Presentation Indicator field is set to “Presentation Restricted” in the Calling Party IE or the CPND Indicator is set to “Presentation Denied” in the Display IE.

Operating parameters

The code to be dialed by the user can be flexibly defined, although *67 will be usual in North America.

The code which is outpulsed on non-ISDN analog or digital trunks can also be flexibly defined on a per-route basis. Different codes can be programmed for routes which mix Digitone (DTN) and Dial Pulse (DIP) Classes of Service.

Frequently, the codes outpulsed on trunks will be the same as those dialed from station sets, but there is no reason why they cannot be different.

Central Office Trunk (COT), Foreign Exchange (FEX), Wide Area Telephone Service (WATS), and Direct Inward Dialing (DID) are the only trunk route types allowed to outpulse the Privacy Indicator for an outgoing non-ISDN call.

ISDN implementations include DSM-100/250, SL-100, AT&T4, AT&T5, and Meridian Customer Defined Network (MCDN) private networks.

If as user requests privacy by dialing the Flexible Feature Code (FFC) defined for the CPP feature, and CPP is not provisioned in the outgoing trunk route, the call will proceed without carrying the Privacy Indicator.

The CPP feature will not inhibit the Calling Party Number and Name from being displayed for an internal call within a local Option11C Compact customer group.

A common number defined for the Special Prefix (SPRE) code in the database is “1”. Thus, “1167” will not be accepted as an FFC for CPP due to the conflict with existing DNs. The technician should either change the SPRE code, or define a new FFC for CPP to be used by a rotary telephone.

Feature interactions

Autodial

An outgoing trunk call initiated by pressing the Autodial key will carry the Privacy Indicator if the Calling Party Privacy (CPP) code followed by the normal dialing sequence is stored against the Autodial key. The CPP code is counted against the maximum number of digits (currently 23) stored against the Autodial key.

A user can also store the CPP code against the Autodial key. An outgoing CPP call can be initiated by pressing the Autodial key, followed by manually dialing the digits.

An outgoing CPP call can also be initiated by dialing the CPP code, followed by pressing the Autodial key against which the normal dialing sequence of digits have been stored.

Automatic Call Distribution

A call placed by means of Enhanced Automatic Call Distribution (ACD) Routing, Enhanced Interflow, Enhanced Night Call Forward, Enhanced Network Routing, or Network ACD will respect the CPP request of the originator.

Automatic Call Distribution MAX (ACD MAX)

The Calling Line Identification (CLID) is still included in ACD MAX reports, even if the caller has requested CPP.

Call Detail Recording

The current Call Detail Recording (CDR) records which include the Calling Party Number will continue to do so even if the caller has requested CPP. The FFC for CPP dialed by the user will be included in the dialed digits field when generating a CDR record.

An outgoing non-ISDN trunk call outpulsing the Privacy Indicator will include the Privacy Indicator in the outpulsed digits field when generating the CDR records if the outgoing non-ISDN trunk route has Outpulsed Digit Option (DPD) activated.

Call Forward All Types
Hunt

If an incoming ISDN trunk call with the Privacy Indicator is forwarded, the Privacy Indicator will be tandemed to the far end to inhibit the display of the Calling Party Name or Number provided that the outgoing trunk route on the tandem node also has CPP provisioned.

If an incoming non-ISDN trunk call is forwarded to a trunk, the outgoing trunk call from the tandem node will carry the Privacy Indicator if the outgoing trunk route on the tandem node has the TCPP option set.

The CPP code can also be stored on the forwarding DN. If the CPP is requested on the forwarding DN, the Privacy Indicator will be outpulsed to the terminating node to inhibit the number of the forwarding set (i.e, at the tandem node) from being displayed on the terminating set. In this case, the forwarding station must include the CPP in the forwarding DN (such as *67 + ACOD + the DN on the terminating node).

The above scenario also applies to Hunt and Network Hunt.

Call Hold, Deluxe
Call Hold, Permanent

When a user takes an incoming trunk call with the Privacy Indicator off of hold, no Calling Party Number or Name will be displayed on the set.

Call Pickup

If an incoming trunk call with the Privacy Indicator is picked up locally, the display of the calling Party Number and Name are not displayed on the terminating set.

Call Pickup Network Wide

If an incoming trunk call with the Privacy Indicator is picked up by a remote set (requesting party), the display of the calling Party Number and Name are not displayed on the requesting set.

Call Transfer

If an incoming non-ISDN call is being transferred or an incoming ISDN call is transferred to a non-ISDN trunk, the Calling Party Name and Number will not be passed on to the terminating set. The CPP feature will not change this operation.

For cases where an incoming call with the Privacy Indicator is transferred over an MCDN trunk, or to a local station, the name and/or number of the originating party will not be displayed on the set of the final terminating party.

Call Party Name Display (CPND)

In current operations an incoming ISDN call with the Call Party Name Display (CPND) Indicator field set to “Presentation Denied” still displays the Calling Party Name.

The CPP feature will inhibit the display of the Calling Party Name for an incoming ISDN call with the CPND Indicator field set to “Presentation Denied”.

Conference

The CPP feature will pass the Privacy Indicator to the terminating set to inhibit the display of the Calling Party Name and Number if the Conference feature is used for the purpose of performing a transfer.

Calling Party Name Display Denied

For outgoing calls, if the CPP package is equipped, the CPP feature will take precedence over the Calling Party Name Display Denied feature for restricting the Calling Party Name and Number. For example, if an outgoing ISDN call is marked as a CPP call, the outgoing SETUP message will include the Calling Party Number IE with the Presentation Indicator set to “Presentation Restricted” and the Display IE with the CPND Indicator set to “Presentation Denied”, to inhibit both the Calling Party Number and Name being displayed on the terminating set, regardless of whether or not the Calling Party Name Display Denied feature allows the display of the Calling Party Name and/or Number.

The Calling Party Name Display Denied feature takes precedence over the CPP feature for displaying an incoming ISDN call.

Feature Group D

If an incoming Feature Group D (FGD) call terminates at a Option11C Compact switch locally, the received 10-digit Automatic Number Identification (ANI) will be displayed on the terminating set if the Show ANI Digits on Terminal Displays (SHAN) field is set to “YES” in the FGD data block associated with the incoming trunk route. If the originator requests CPP, the end office will not send the 10-digit ANI to the PBX.

If an incoming FGD call is routed to another switch via ISDN Primary Rate Interface (PRI) or Integrated Service Link (ISL), the outgoing SETUP message will include the 10-digit ANI (if it exists) as the Calling Party Number with the Presentation Indicator set to “Presentation Restricted” if the outgoing trunk route has the TCPP option on. The TCPP option takes precedence over the SHAN field defined in the FGD data block associated with the incoming trunk route to restrict the 10-digit ANI display.

Hot Line

A Hot Line call will carry the Privacy Indicator if the Calling Party Privacy (CPP) code followed by the normal dialing sequence is stored in the Hot Line DN. The CPP will count against the maximum number of digits (currently 31) allowed for the Hot Line DN.

Incoming Trunk Programmable CLID

If the incoming trunk route is a non-ISDN route, the billing number assigned by the incoming trunk route will be passed to the Public Exchange/Central Office with the Presentation Indicator field set to “Presentation Restricted” if the outgoing ISDN trunk route has the TCPP prompt set to “YES”. If the TCPP prompt is set to “NO”, the Presentation Indicator is set to “Presentation Restricted” only if the BDSP (Billing Display) prompt in the incoming trunk route is set to “NO”.

If the incoming trunk route is an ISDN route, the “Restricted” Presentation Indicator will be tandemed to the outgoing trunk route. If the Presentation Indicator is set to “Presentation Allowed” or no Calling Party Number IE is received in the incoming trunk route, the billing number assigned by the incoming trunk route will be passed to the Public Exchange/Central Office with the Presentation Indicator field set to “Presentation Restricted” only if the incoming trunk route has the BDSP prompt set to “NO”.

Last Number Redial

The Last Number Redial (LNR) feature will store the CPP code in the LNR data space if the CPP code was included in the last number dialed by the user. Any subsequent outgoing redialed call will send the Privacy Indicator to the far end.

Malicious Call Trace

Incoming calls to stations having the Malicious Call Trace feature enabled will continue to include the Terminal Number (TN) of the calling party in the Malicious Call Trace record, even if the caller has requested CPP.

Meridian Link

The CLID is still included in the Application Module Link (AML) messages sent to the Meridian Link Module even if the call has requested CPP.

Meridian Mail

When an incoming ISDN call with the Privacy Indicator terminates on Meridian Mail, the Calling Party Name and Number will not be passed to Meridian Mail to be recorded. When the called party retrieves the messages, no Calling Party Number of Name will be played, and the called party will not be able to initiate the Call Sender feature either, since no CLID is recorded.

Calls placed by means of Through Dial will be able to request privacy. These are calls where the person accessing Meridian Mail can dial 0 followed by any telephone number. The caller will be able to dial the CPP code as part of the number following 0.

Meridian MAX

The CLID is still sent to the Meridian MAX even if the caller has requested CPP.

Meridian 911

An incoming 911 call with ANI information will always display the ANI digits on the terminating set or pass the ANI information to the Meridian 911 application.

Network Message Services

An incoming trunk call with the Privacy Indicator will not display the Calling Party Name and Number on the Message Center operator's terminal.

Network Ring Again

A call placed by means of the Network Ring Again feature will respect the CPP requested when the call was originally dialed.

Private Line Service

The Private Line Service feature will outpulse the Privacy Indicator only if it is dialed by the originator. An asterisk will be outpulsed to the far end only if it is an OPAO call, otherwise the asterisk signals a three-second pause.

Ring Again – Busy Trunk

A call automatically redialed by the Ring Again – Busy Trunk feature will respect the CPP requested when the call was originally dialed.

Speed Call
System Speed Call

An outgoing trunk call initiated by dialing the Speed Call code will carry the Privacy Indicator if the CPP code followed by the normal dialing sequence is stored in the Speed Call Entry represented by the Speed Call code. The CPP code will be counted against the maximum number of digits (currently 31) allowed per Speed Call list entry.

A user can also store the CPP code in the Speed Call Entry (or Speed Call key). An outgoing CPP call can then be initiated by dialing the Speed Call code (or pressing the Speed Call key), followed by manually dialing the digits.

However, existing Speed Call limitations do not allow a user to dial *67 (or anything else) before accessing a Speed Call list entry.

Stored Number Redial

During Stored Number Redial (SNR) programming, a user can store the CPP code followed by the normal dialing sequence in the SNR data space. Outgoing calls originated by the SNR feature will send the Privacy Indicator to the far end. The CPP code will be counted against the maximum number of digits (currently 31) allowed by the SNR feature.

During an active call on a Meridian 1 proprietary telephone, the Stored Number Redial feature will store the CPP code in the SNR data space if the CPP code was included in the number dialed by the originator. The outgoing redialed calls will send the Privacy Indicator to the far end.

Trunk Optimization Before Answer

An optimized call due to Trunk Optimization Before Answer will respect the CPP requested by the originator.

Feature packaging

Calling Party Privacy (CPP) is package 301, which requires Flexible Feature Codes (FFC) package 139.

Feature implementation

If the CPP package is equipped in the Option11C Compact system, the following steps illustrate how to configure Calling Party Privacy.

1 Define the FFC for the CPP feature. FFC package 139 is required for loading LD 57.

LD 57 – Define the FFC for CPP Code.

Prompt	Response	Description
REQ	NEW, CHG	Add, or change.
TYPE	FFC	Flexible Feature Code.
CUST	0	Customer number.
FFCT	(NO), YES	Flexible Feature Confirmation Tone.
...		
CODE	CPP	FFC type to be altered. CPP entry is only allowed if the CPP package is equipped. <CR> means that no FFC types are prompted.
...		
CPP	(*67), nnnn	Calling Party Privacy code. CPP is prompted only if the CPP package is equipped. Any arbitrary digit sequence up to four digits can be specified. For Option11C Compact proprietary set, an “*” can be entered as the first digit. CPP will be prompted until a <CR> is entered.

LD 16 – Define Privacy Indicators.

Prompt	Response	Description
REQ	NEW, CHG	Add, or change.
TYPE	RDB	Route Data Block.
CUST	0	Customer number.
TKTP	aaa	Trunk Route Type.
...		
DTRK	YES	Digital trunk route.
DGTP	DTI	Digital trunk type.
ISDN	YES	ISDN PRI option.
...		
ACOD	nnnn	Trunk Access Code.
CPP	YES	Calling Party Privacy. YES = This trunk route is enabled for the recognition of the Calling Party Privacy feature. CPP is only prompted if the following conditions are met: the CPP package is equipped, the OPAO package is not equipped, OGT (outgoing) or IAO (incoming and outgoing) trunk, non ISDN option and trunk route type is COT/DID/FEX/WAT. The default value for the CPP prompt is NO.
TCPP	(NO), YES	CPP for an incoming trunk call tandemed to this trunk route. YES = An incoming non-ISDN trunk call tandemed to this trunk route will carry the Privacy Indicator. The default value for the TCPP is NO.

- DTPI	nnnn	Privacy Indicator for a digitone trunk. DTPI is prompted only if CPP is set to “YES” and the trunk route is non-ISDN. If CPP is changed from NO to YES, the default is *67. Any arbitrary digit sequence (0-9) up to four digits can be specified. An asterisk “*” is allowed to be the first digit only if the outgoing call goes to a Public Network.
- DPPI	nnnn	Privacy Indicator for a dial pulse trunk. DPPI is prompted only if CPP is set to “YES” and the trunk route is non-ISDN. If CPP is changed from NO to YES, the default is 1167. Any arbitrary digit sequence (0-9) up to four digits can be specified.

2 CPP is only prompted if the CPP package is equipped, the OPAO package (104) is not equipped, the trunk is outgoing (OGT) or incoming and outgoing (IAO), non-ISDN option and the trunk route type is COT, DID, FEX or WAT.

3 CLBA Class of Service activates Calling Party per-line blocking. CLBD Class of Service deactivates Calling Party per-line blocking; however, the user can still request Calling Party Privacy by dialing the CPP code.

LD 10/11 – Activate Calling Party per-line blocking.

Prompt	Response	Description
REQ	NEW, CHG	Add, or change.
TYPE	nnnn	Type of telephone.
TN	c u	Terminal Number
...		
CLS	CLBA	Activate Calling Party per-line blocking. Enter CLBD to deactivate Calling Party per-line blocking. CLBD is the default.

Feature operation

Any outgoing call initiated from a set with Calling Party per-line blocking (CLBA) Class of Service will request Calling Party Privacy.

If the originating party has CLBD Class of Service, the Calling Party Privacy feature can only be activated on a per-call basis; if standard dialing procedures are used, no CPP is requested, and the call will proceed as usual. The user must do one of the following to request CPP:

1 Precede any dialing of a call with a new Flexible Feature Code defined for the CPP feature. This operates from all telephone types.

Coordinated Dialing Plan

This package can be used with NARS (Option 58) or as a standalone feature to provide a coordinated dialing plan in an ISDN environment.

Package Requirements

Package requirements are as follows:

BRTE	package 14
BQUE	package 28
NCOS	package 32
FCBQ	package 117

Data Packet Network Access X.25

PRI trunks may be configured to access a Public Data Packet Network (DPN - X25) via the DMS-100 ISDN node, provided that this service is made available by the serving Central Office. On a per call basis, any B-channel can be used to access the packet network.

Package Requirements

The package requirements are as follows:

ISDN	package 145
PRI	package 146

DCH Error Reporting and Monitoring

DCH Error Reporting and Monitoring are an ISDN Primary Rate Interface feature that provides messages that indicate the cause of the establishment or release of the D-Channel to aid in diagnosis during installation and maintenance.

D-channel message monitoring is used to analyze and screen the Layer 3 protocol messages traveling between the near and far end D-channels.

Message monitoring can be performed only on a per D-channel basis using LD 96. That is, once the message monitor is turned on, all messages are output for that D-channel. The messages output might be excessive.

Additional commands in LD 96 allow selective message monitoring based on:

— the D-channel

— the B- or ISL channel

— the message types for a specific feature

— any specific message

This feature eliminates call blocking due to time slots being unavailable. By allowing a time slot reserved for a primary function to be reused for any subsequent requirements during call processing, all channels on DTI or PRI loops will be available for use.

Time slots reserved for a particular DTI or PRI channel are stored in an unprotected data structure allowing easy access, such as a call register. Each time a new path is required for the same DTI or PRI channel, the data structure can be accessed to determine if there is a reserved time slot that can be reused. If the new path requirements is intra-group (single-group switch), then the time slot can be reused. If the new path requirement is inter-group (multi-group switch), the reserved time slot can be reused if a matching junctor slot is available.

A count is kept of the number of times that a time slot has been reused. The time slot is not idled until all reservations have been canceled.

This feature applies to the following loop types on single-group switches:

— 1.5 Mbit 24-channel DTI

— 1.5 Mbit 23 B+D PRI

Operating parameters

This feature applies only to network enhanced machines.

Feature interactions

None.

Feature packaging

None.

Feature implementation

None.

Direct Inward System Access (DISA)

Special dial tone is returned in-band only on the B-channel. Additional code digits are via in-band DTMF tones.

Display of Calling Party Denied

Display of Calling Party Denied (DPD) permits Analog (500/2500 type) and Meridian 1 proprietary sets to either allow or deny associated name and directory number information from being displayed on other sets when involved in a call. This feature is supported on internal calls (same node) and calls placed over a Meridian Customer Defined Network (MCDN) Integrated Services Digital Network (ISDN).

DPD uses the following Class of Service options in LD 10 and LD 11: Display Digits Allowed/Denied (DDGA/DDGD) Name Display Allowed/Denied (NAMA/NAMD). Display of Calling Party Denied Class of Service options are programmed on a per set basis. Table 2 outlines the possible configurations and the resulting display on both the calling and called parties display.

Table 2
Display Scenarios on Calling and Called Party's Sets.

CALLING PARTY'S CLASS OF SERVICE	CALLED PARTY'S CLASS OF SERVICE	DISPLAY OF CALLING PARTY	DISPLAY OF CALLED PARTY
DDGA NAMA	DDGA NAMA	Called Party's DN Name of Called Party	Calling Party's DN Name of Calling Party
DDGA NAMA DDGD NAMD	DDGD NAMD DDBA NAMA	Called Party's DN X X X X Called Party's DN Called Party's Name	Calling Party's DN Name of Called Party – – – – X X X X
DDGD NAMD	DDGD NAMD	Called Party's DN X X X X	– – – – X X X X

Figure 2 illustrates the functionality of Display of Calling Party Denied (DPD) on a nodal basis when both the calling and called parties have enabled DPD Class of Service options. The calling party has configured a Digit Display Denied (DDGD) and Name Display Denied (NAMD) Class of Service. The called party has the same Class of Service options programmed. When the calling party dials the called party, the called party's set restricts the display of the calling party's associated name and directory number. The calling party's name is replaced by a string of dashes (– – – –), and the associated name is replaced by the string X X X X.

Figure 2
Calling Party and Called Party on the Same Node

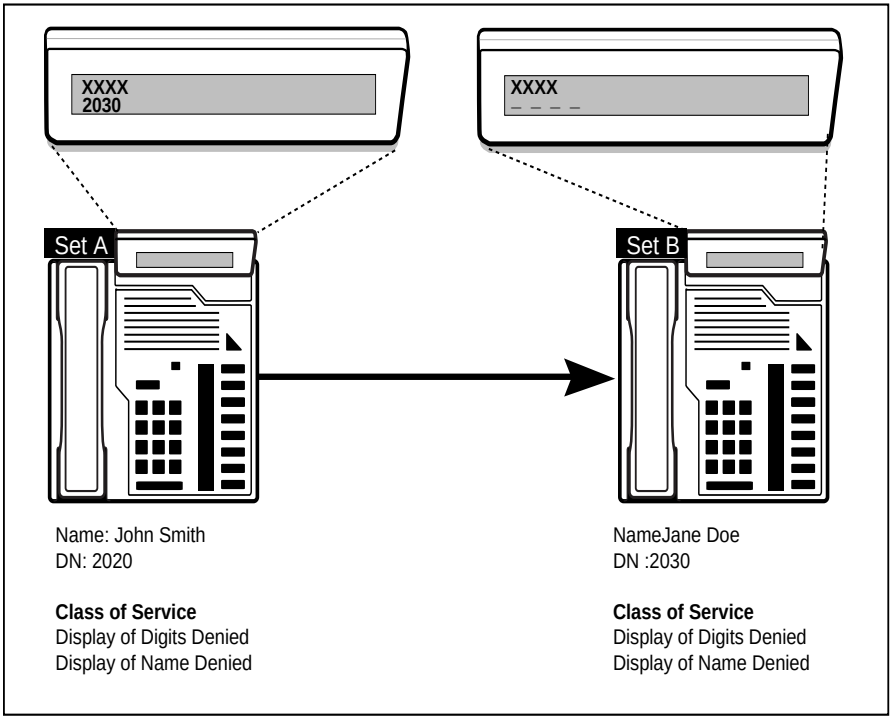

As illustrated Figure 3, for calls placed over a MCDN ISDN network, a Display of Calling Party Denied and Display Digits Denied (DDGD) on the calling party's set, prevents the Calling Line Identification (CLID) from being displayed on the called party's set. In this case, the calling party's CLID is replaced by the ISDN route access code and route member number. If the calling party has configured Name Display Denied (NAMD), the calling party's associated name is not displayed on the called party's set.

Figure 3
ISDN Network Calls

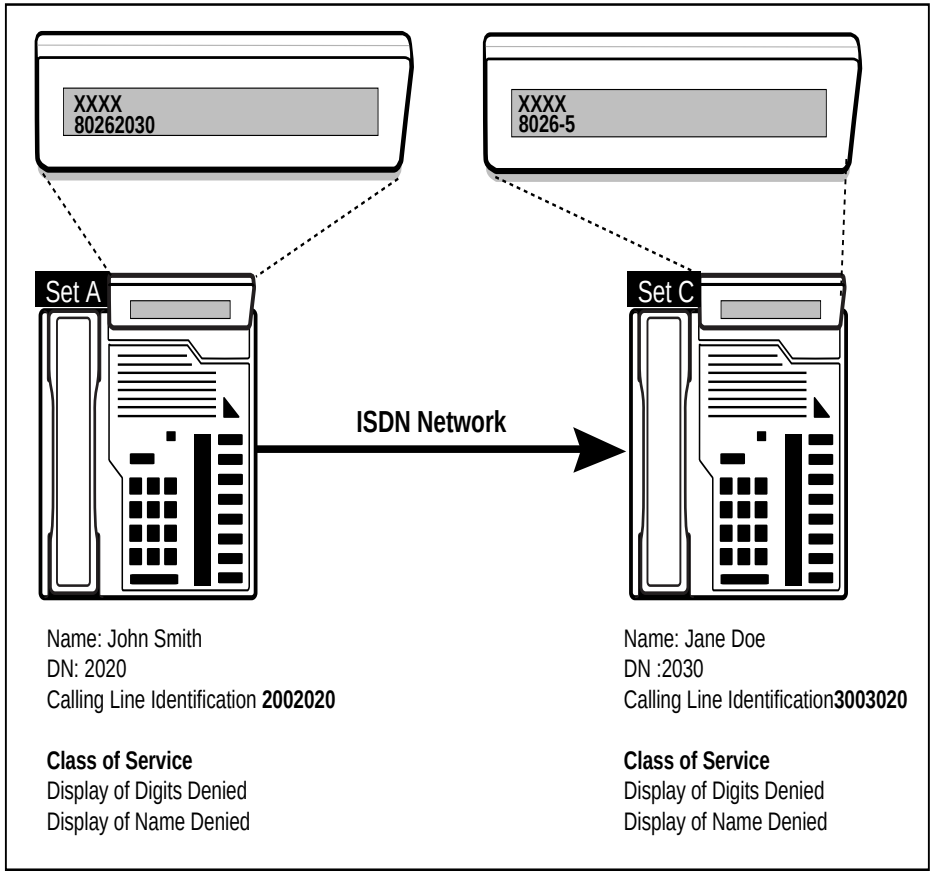

Operating parameters

Display of Calling Party Denied (DPD) is only supported on internal calls and Meridian Customer Defined Network (MCDN) ISDN networks.

The called party's directory number always appear on the display of the calling party's set. This occurs whether or not the called party has a Digit Display Denied (DDGD) Class of Service.

Feature interactions

Attendant Console

An Attendant Console's display is not impacted by this feature. Display is provided to an attendant regardless of the Class of Service configured on a set. To prevent the display of calls placed over an ISDN network, Network Attendant Service (NAS) must be configured.

Call Detail Recording

For internal calls, calling and called party's Directory Numbers are included in Call Detail Recording (CDR) records. For MCDN ISDN network calls, the calling or connected party's DN is included in the CDR regardless of the set's Class of Service.

Call Forward All Type

When a set activates any of the call forwarding features, display information on incoming calls is updated in accordance with the Class of Service programmed for that Directory Number.

The terminating set display is dependent on the Calling Party Name Display (CPND) Dialed Name Display Denied/Allowed Class of Service. If the terminating set has a Dialed Name Display Allowed, the display on the terminating set reflects the name and DN of the forwarding set and the DN of the calling party. The terminating set's display is dictated by the DPD Class of Service options configured. If these options are set to denied, then dashes and X's are displayed.

For a MCDN ISDN call, calling party's Calling Line Identification (CLID) is replaced with the ISDN route access code (ACOD) and the route member number, and the calling party's CLID is replaced with a string of dashes.

Call Hold

When a call is retrieved from hold, the calling and called party's displays reflect their individual Class of Service options.

Call Park

When the Call Park timer expires on a parked call, a set's display does not include the name and DN of the calling party. When a parked call is retrieved by another set, display information is based on the Class of Service of individual sets.

Call Pickup

When a call is picked up from another set, the terminating set's display is in accordance with the Class of Service of individual sets. The calling party's display includes the dialed DN, the terminating DN and the name of the terminated set. However, if the terminating set has Digit Display Denied (DDGD), then both the called and terminating sets' DNs are blocked from the calling party's display. The same occurs with Digit Display Allowed (DDGA); both the called and terminating sets' DNs are displayed on the calling party's set.

Call Transfer

When a set transfers a call, display information is updated according to the Class of Service of the respective Terminal Numbers (TNs). This occurs for both internal and ISDN network calls.

When a call is transferred to another Meridian 1, the calling party's DN and name information is sent and displayed on the set that answers the call. However, if the calling party has Name Display Denied, then the name information is not transferred to the set that answers the call.

If a blind call transfer occurs, the DN of the terminating set is displayed to the calling party, regardless of the DPD Class of Service options configured.

Calling Party Name Display

Display of Calling Party Denied transfers display information that is used by the Calling Party Name Display (CPDN) feature for ISDN calls. If the CPDN of an incoming call is set to "Presentation Denied", the calling party's name information is restricted on the called party's set. For internal calls, name information is taken directly from a set's data block.

Calling Party Privacy

Calling Party Privacy takes precedence over Display of Calling Party Denied on outgoing calls over an MCDN ISDN network. This precedence pertains to the display of the calling party and the name of the called party.

Calling Party Privacy does not affect internal calls using Display of Calling Party Denied.

Conference

For internal and network conference calls, display information is not provided on any of the conferee's sets. When setting up a conference call, by conferencing one set at a time, the display on the conferee's set is in accordance with individual Class of Service. Display is provided for conference calls when the sets are located over the same network.

Dial Intercom

Display information on sets involved in a Dial Intercom Group (DIG) call is based on the individual Class of Service of each set. If a DN is denied for a set involved in a DIG call, the DIG number for that set is replaced by one dash (–) in the case of 10 DIG stations. For 100 DIG stations, the DIG number is replaced by two dashes (– –).

Group Call

The calling party's display shows the DN of the last set to connect into the Group Call, regardless of the Class of Service. The called sets display the Group Number only.

Hot Line

Display information on sets in a Hot Line call is based on the individual Class of Service of each set.

Meridian 911

An incoming M911 call with Automatic Number Identification (ANI) information always displays ANI digits on the terminating set, regardless of the calling party's DPD Class of Service.

Meridian Mail

A calling party's name and/or DN within Meridian Mail are not impacted by this feature. When a Digit Display Denied (DDGD) call is forwarded to Meridian Mail, the calling party's DN is provided to Meridian Mail and is available when reviewing messages.

Multiple Appearance Directory Number

When a Multiple Appearance Directory Number (MADN) is dialed and ringing, the calling party's display does not show name information, provided that at least one of the MADN TNs has a Name Display Denied (NAMD) Class of Service.

The called party's display show the name and number of the calling party, according to the Class of Service of the calling party's TN.

Network Attendant Services

When a call is placed to an attendant over an ISDN network with Network Attendant Services (NAS) configured and Calling Party Name Display (CPND) equipped, the Attendant Console displays the calling party's DN and name. The same occurs when an attendant places a call over the network; however, an Attendant Console's display shows the connected party name and number.

If NAS is not configured, the name and calling/connected party's number is displayed to the attendant provided that the calling/connected party has the Display of Calling Party Denied (DPD) Class of Service options configured to Allowed. If Class of Service options are set to Denied, then this information is not displayed to the attendant.

No Hold Conference Voice Call

Display information on sets involved in a No Hold Conference and Voice calls are based on the individual Class of Service of each set.

Feature packaging

For internal calls, Display of Calling Party Denied (DPD) requires Calling Party Name Display (CPND) package 95.

ISDN Network calls require Calling Party Name Display (CPND) package 95 and Integrated Service Digital Network (ISDN) package 145.

Feature implementation

LD 10 – Allow Directory Number Display and Name Display for Analog (500/2500) type sets.

Prompt	Response	Description
REQ	CHG	Change.
TYPE	500	500/2500 type set data block.
TN	c u	Terminal Number.
...		
CLS	DDGA	Directory Number Display Allowed (default). DDGD = Directory Number Display Denied.
CLS	NAMA	Name Display Allowed (default). NAMD = Name Display Denied.

LD 11 – Allow Directory Number Display and Name Display for Meridian 1 proprietary sets.

Prompt	Response	Description
REQ	CHG.	Change.
TYPE	xxxx	Telephone type, where: xxxx = 2006, 2008, 2216, or 2616.
TN	c u	Terminal Number
...		
CLS	DDGA	Directory Number Display Allowed (default). DDGD = Directory Number Display Denied.
CLS	NAMA	Name Display Allowed (default). NAMD = Name Display Denied.

Feature operation

Internal Call

Calling Party's Class of Service Digit Display Denied (DDGD)

1 Set A, Calling Party, dials Set B, Called Party.

2 Set A's Digit Display Denied (DDGD) Class of Service prevents Set A's DN from being displayed on Set B. Set A's DN is replaced by "– – – –" on Set B's display.

Calling Party's Class of Service Name Display Denied (NAMD)

1 Set A, Calling Party, dials Set B, Called Party.

2 Set A's Name Display Denied (NAMD) Class of Service prevents Set A's name from being displayed on Set B. Set A's name is replaced by "X X X X" on Set B's display.

Called Party's Class of Service Name Display Denied (NAMD)

1 Set A, Calling Party, dials Set B, Called Party.

Set A has a Name Display Denied(NAMD) Class of Service. Set B also has a Name Display Denied (NAMD) Class of Service.Set B's Class of Service prevents Set B's name from being displayed on Set A.

E.164/ESN Numbering Plan Expansion

The E.164/ESN Numbering Plan Expansion feature provides the capabilities to meet the International Telegraph and Telephone Consultative Committee (CCITT) recommendation E.164 for Integrated Services Digital Network (ISDN) and Public Switching Telephone Network (PSTN) dialing.

Generally, the following enhancements are offered by this feature:

— the support of the numbering plan for ISDN and PSTN dialing has been increased to a 15-digit maximum, from a 12-digit maximum;

— the removal of the leftwise-unique restriction imposed on ESN Supplemental Digit Restriction and Recognition (SDRR) entry codes. For example, if 555 is an existing entry, a new entry of either 55 or 5551212 can be entered;

— the addition of “allow” (ALOW) as a new Supplemental Digit Restriction and Recognition (SDRR) entry type in LD 90. There are now nine entry types for Supplemental Digit Restriction and Recognition. One entry type (DENY), denies a call from going through if the digits in the SDRR entry match the dialed digits. There are seven other entry types that provide special treatments if the digits in the SDRR entry matches the dialed digits. The new ALOW entry allows a call to go through, if the dialed digits did not match any entry within the Supplemental Digit Restriction and Recognition table;

— the Special Number Translation (SPN) screening digits scheme is changed; and

— the capability of the Option11C Compact base features to store digits is increased to 31 digits.

The specific enhancements delivered by the E.164/ESN Numbering Plan Expansion feature are provided by the tables that follow.

Summary of new ESN functionalities

Table 3 summarizes the changes made to the ESN functionality. Please note that the components that are not affected are not listed.

Table 3 - Summary of ESN changes.

Component	Old	New
Maximum number of digits for a Special Numbering Translation screening.	11	19
Maximum number of Digit Manipulation Index (DMI) deletion digits.	15	19
Maximum number of Digit Manipulation Index (DMI) insertion digits.	24	31
Maximum number of Supplemental Digit Restriction and Recognition (SDRR) tables, with BARS.	256	1500
Maximum number of Supplemental Digit Restriction and Recognition (SDRR) tables, with NARS.	512	1500
Maximum number of words per Supplemental Digit Restriction and Recognition (SDRR) entry.	3	4

Maximum number of digits in each Supplemental Digit Restriction and Recognition (SDRR) entry.	7	10
Maximum length of Flexible Numbering Plan (FNP) Flexible Digit Number Length (FLEN) numbers for Special Number Translation (SPN).	16	24
Maximum length of Flexible Numbering Plan (FNP) Flexible Digit Number Length (FLEN) numbers for Trunk Steering Codes (TSCs).	16	24
Maximum number of digits per Free Special Number Screening (FSNS) Special Number.	11	19
Total number of digits for screening under Free Special Number Screening (FSNS).	14	22
Maximum number of possible Supplemental Digit Restriction and Recognition (SDRR) entry types.	8	9 (‘ALOW’ is added). ALOW is a new entry type in LD 90. This entry allows a call to go through as if the dialed digits did not match any entry within the Supplemental Digit Restriction and Recognition table.

Restriction imposed on Supplemental Digit Restriction and Recognition (SDRR) entry codes.	Leftwise Unique.	None. The leftwise-unique restriction imposed on SDRR entry codes is removed. For example, if 555 is an existing entry, a new entry of either 55 or 5551212 can be entered.

Summary of Option11C Compact base features enhancements

Table 4 summarizes the changes made to the base Option11C Compact features functionality. Please note that the components that are not affected are not listed.

Table 4 - Summary of Option11C Compact base features changes.

Component	Old	New
Maximum number of digits for an Autodial entry. Note that this enhancement does not apply to M3000 sets.	23	31
For the No Hold Conference functionality, the maximum number of digits for a Conference Autodial target DN entry.	23	31
Maximum number of digits for the Call Forward All Calls DN. Note that this enhancement does not apply to M2317 and M3000 sets.	23	31
Maximum number of digits for the Internal Call Forward DN.	23	31
For the Phantom DN functionality, the maximum number of digits for the Default Call Forward DN.	23	31
Maximum number of digits for the Customer Call Forward DN.	16	23

Summary of Automatic Call Distribution (ACD) enhancements

Table 5 summarizes the changes made to the ACD functionality. Please note that the components that are not affected are not listed.

Table 5 - Summary of Option11C Compact ACD changes.

Component	Old	New
Maximum number of digits for the ACD Night Forward DN.	23	31
Maximum number of digits for the ACD Interflow DN.	23	31

Summary of Customer Controlled Routing (CCR) enhancements

Table 6 summarizes the changes made to the Customer Controlled Routing functionality. Please note that the components that are not affected are not listed.

Table 6 - Summary of CCR changes.

Component	Old	New
Maximum number of Termination DN digits in the CCR ITR To-Route-A-Call message.	24	31

Operating parameters

All existing operating parameters that apply to the Option11C Compact ESN functionality, base system features, and ISDN PRI networking features apply to the E.164/ESN Numbering Plan Expansion feature.

The 31-digit expansion pertaining to the Call Forward All Calls DN does not apply to Meridian M2317 and M3000 sets, since the their firmware limits entering a CFAC DN from the set to a maximum of 23 and 28 digits, respectively.

An Autodial key cannot be configured on a Meridian M3000 set; instead, the M3000 sets are equipped with a private directory, which allows automatic dialing of a stored DN entry by touching the corresponding name on the set's display screen. Since the firmware of the M3000 limits the length of a DN entry to a maximum of 28 digits, the 31-digit expansion pertaining to the Autodial does not apply to Meridian M3000 sets.

Since the Network Call Trace feature can outpulse a maximum of 21 digits to be printed on the TTY, the 31-digit expansion does not apply to Network Call Trace.

The 16 digit maximum pertaining to the Calling Party Number, Connected Party Number, Redirecting Number, and Redirection Number has not been expanded by the E.164/ESN Numbering Plan Expansion feature.

If all the digits of a DN are dialed automatically, such as for a Speed Call or for any redial feature, only the first 31 digits are processed. This means that any digits that are inserted by, for example, network signaling, pretranslation, or digit manipulation, are counted as part of these 31 digits. Therefore, even fewer than the automatically dialed digits may be processed.

Flexible Feature Codes (FFC) DNs may have a length of 1-7 digits. Call Forward All Calls (CFAC), Internal Call Forward All Calls (IFC), and Remote Call Forward (RCFW) are supported by FFCs, and can be activated, deactivated, and verified using FFCs. When activating CFAC using the Remote Call Forward FFC (RCFA), or when verifying the Call Forward DN using the Call Forward All Call FFC (CFWV), the Remote Call Forward FFC (RCFV), or the Internal Call Forward All Calls FFC (ICFV), the FFC DN is kept, using eight of the available 31 digits. For the CFAC DN or ICF DN, this means that only 23 possible digits can be stored or verified using FFCs. As a result, this limitation does not accommodate the 31 digit CFAC DN and IFC DN expansion introduced by the E.164/ESN Numbering Plan Expansion feature.

Calling Party Privacy (CPP) allows a caller to block his or her name from appearing on the called party display. The call is marked as a CPP call by entering a CPP FFC, up to seven digits long. This means that up to seven additional digits may have to be stored for automatic dialing. These digits are stored in sequence, and subsequent digits may not be processed.

In the case of CPP outpulsing, the CPP outpulsed digits (typically *67 or 1167) are stored after CPP has been activated. If this call goes over a trunk, the CPP outpulsed digits are sent to the far end to indicate that the call is a CPP call. For ISDN calls, a CPP flag is marked in the ISDN message. For non-ISDN CPP calls, digits that are already stored, such as for Call Forward, Autodial, and Speed Call, may be pushed out when the CPP digits are inserted, since only 31 digits can automatically be processed. This means that up to four digits may be removed from the digits that are outpulsed.

The System Access Enhancement (SAE) feature impacts the accepted values for the Call Forward All Calls DN, and the Internal Call Forward DN, when entered in LD 10 and LD 11. This feature allows all values between 4-31 to be accepted, rather than the normal accepted values of 4, 8, 12, 16, 20, 24, 28, 31. Also, the default is 4, rather than 16.

Feature interactions

The E.164/ESN Numbering Plan Expansion feature does not interact with the Option11C Compact base system features and ISDN PRI networking features, other than as described in Table 3 to Table 6, and in the operating parameters.

Feature packaging

The E.164/ESN Numbering Plan Expansion feature does not introduce a new package. However, the following packages are required to support the new expansions.

For ESN expansions:

— Basic Alternate Route Selection (BARS) package 57;

— Network Alternate Route Selection (NARS) package 58;

— Flexible Numbering Plan (FNP) package 160.

For ISDN expansions:

— Digit Display (DDSP) package 19;

— Integrated Services Digital Network (ISDN) package 145;

— 1.5 Mbps Primary Rate Access (PRA) package 146;

For base system features expansions:

— Optional Features (OPTF) package 1;

— 2500 Telephone Features (SS25) package 18;

— Automatic Call Distribution (ACD) package 40;

— Automatic Call Distribution Advanced (ACD) package 41;

— Automatic Call Distribution Basic (ACD) package 45;

— 500 Telephone Features (SS5) package 73;

— Controlled Class of Service (CCOS) package 81;

— Background Terminal (BGD) package 99;

— Flexible Feature Codes (FFC) package 139;

— Phantom Terminal Numbers (PHTN) package 254.

Feature implementation

The following steps are used to configure the E.164/ESN Numbering Plan Expansion enhancements:

- In LD 10, for analog (500/2500 type) sets, configure the expansion pertaining to the maximum length of Autodial, Call Forward All Calls, Default Call Forward (for Phantom TNs), and Internal Call Forward DNs;
- In LD 11, for Option11C Compact proprietary sets, configure the expansion pertaining to the maximum length of Autodial, Conference-Autodial, Call Forward All Calls, and Internal Call Forward DNs;
- In LD 12, for attendant consoles, configure the expansion pertaining to the maximum length of the Autodial DN;
- In LD 15, configure the expansion pertaining to the maximum length of the Customer Call Forward DN;
- In LD 23, configure the expansion pertaining to the maximum length of the ACD Night Call Forward DN and the ACD Interflow DN;
- In LD 86, for the ESN data block, configure the expansion pertaining to the maximum number of Digit Manipulation tables, and maximum number of Supplemental Digit Restriction and Recognition blocks;
- In LD 86, for the Digit Manipulation data block, configure the expansion pertaining to the maximum number of leading digits to be deleted and inserted;
- In LD 87, for a Free Special Number Screening Index, configure the expansion pertaining to the maximum number of Special Numbers to be screened;
- In LD 87, for a Trunk Steering Code, configure the expansion pertaining to the maximum number of Flexible Numbers;

- In LD 90, for Network Translation tables, configure the expansion pertaining to the maximum number of Special Numbers digits, the maximum number of digits for Flexible Numbers, the maximum number of Supplemental Digit Restriction and Recognition digits per entry, and the addition of “allow” as a new Supplemental Digit Restriction and Recognition type.

LD 10 — For analog (500/2500 type) sets, configure the expansion pertaining to the Autodial, Call Forward All Calls, Default Call Forward (for Phantom TNs), and Internal Call Forward DNs.

Prompt	Response	Description
REQ	NEW, CHG	Add new data, or change existing data.
TYPE	500	Type of telephone set.
TN	c u	Terminal number.
...		
FTR		Special features for telephone sets.
	CFW (4)-31	Enter the maximum number of digits in the Call Forward All Calls DN. Note that there is no default value.
	DCFW ll xxx...x	Enter the maximum number of digits in the Default Call Forward DN for a Phantom DN. ll = 4,8,12,16,20,24,28,31 (entries are rounded up to the next valid length.) xx...x = the Default Call Forward All Calls DN.
	ICF (4)-31	Enter the maximum number of digits in the Internal Call Forward DN for a Phantom DN.
	...	

LD 11 – For Option11C Compact proprietary sets, configure the expansion pertaining to the Autodial, Call Forward All Calls, Default Call Forward (for Phantom TNs), and Internal Call Forward DNs.

Prompt	Response	Description
REQ	NEW, CHG	Add new data, or change existing data.
TYPE	xxxx	Type of telephone set. xxxx = 2006, 2008, 2116, or 2616.
TN	c u	Terminal number (card and unit number).
KEY		Telephone function key assignments.
	nn ADL ll xxx...x	Enter the maximum number of Autodial digits that may be stored. nn = Key number ll = 4,8,12,(16),20,24,28,31,NUL Entries are rounded up to the next valid length. An entry of NUL will disable the Autodial feature xx...x = the Autodial target DN (this is an optional entry.)
	nn CA ll xxx...x	Enter the maximum number of digits that may be stored for the combined Conference-Autodial DN. nn = Key number ll = 4,8,12,(16),20,24,28,31 (entries are rounded up to the next valid length.) xx...x = the Conference-Autodial target DN (this is an optional entry.)
	nn CFW ll xxx...x	Enter the maximum number of digits that may be stored for the Call Forward All Calls DN. nn = Key number ll = (4)-31 xx...x = the Call Forward All Calls DN (this is an optional entry.)
	nn ICF ll xx...x	Enter the maximum number of digits that may be stored for the Internal Call Forward DN. nn = Key number ll = (4)-31 xx...x = the Internal Call Forward DN (this is an optional entry.)

LD 12 – For for attendant consoles, configure the expansion pertaining to the maximum length of the Autodial DN.

Prompt	Response	Description
REQ	NEW, CHG	Add new data, or change existing data.
TYPE	xxxx	Type of attendant console xxxx = 2250.
TN	c u	Terminal number (card and unit).
KEY		Attendant console function key assignments.
	nn ADL xxx...x	Enter the maximum number of Autodial digits that may be stored. nn = Key number xxx...x = the Autodial DN, up to 31 digits (this is an optional entry.)
	...	

LD 15 - Configure the expansion pertaining to the Customer Call Forward DN.

Prompt	Response	Description
REQ:	NEW, CHG	Add new data, or change existing data.
TYPE	RDR	Redirection data.
CUST	0	Customer Number.
...		
- CCFWDN	xxx...x X	Enter the Customer Call Forward DN, up to 23 digits (this entry is made for a new CCFWDN, or if the length of an existing CCFWDN has been expanded.) Enter X for no entry.
...		

LD 23 - Configure the expansion pertaining to the ACD Night Call Forward DN and the ACD Interflow DN.

Prompt	Response	Description
REQ	NEW, CHG	Add new data, or change existing data.
TYPE	RDR	Call Detail Recording data.
CUST	0	Customer Number.
ACDN	xxx...x	ACD DN.
...		
NCFW	xxx...x	Enter the ACD Night Forward DN, up to 31 digits (this entry is made for a new Night Forward DN, or if the length of an existing Night Forward DN has been expanded.)
...		
IFDN	xxx...x	Enter the ACD Interflow DN, up to 31 digits (this entry is made for a new Interflow DN, or if the length of an existing Interflow DN has been expanded.)

LD 86 - For the ESN data block, configure the expansion pertaining to the maximum number of Supplemental Digit Restriction and Recognition blocks, and the maximum number of Digit Manipulation tables.

Prompt	Response	Description
REQ	NEW, CHG	Add new data, or change existing data.
CUST	0	Customer Number.
FEAT	ESN	ESN data block feature.
...		
MXSD	(0)-1500	Enter the maximum number of Supplemental Digit Restriction and Recognition (SDRR) blocks, for BARS or NARS. Enter 0 (the default) if no SDRR blocks are required.
...		

MXDM ...	(0)-1000 (0)-256 (0)-32	Enter the maximum number of Digit Manipulation tables. (0)-1000 = for Flexible Numbering Plan (0)-256 = for BARS/NARS (0)-32 = for Coordinated Dialing Plan Enter 0 (the default) if no Digit Manipulation tables are required.

LD 86 - For the Digit Manipulation data block, configure the expansion pertaining to the maximum number of leading digits to be deleted and inserted.

Prompt	Response	Description
REQ	NEW, CHG	Add new data, or change existing data.
CUST	0	Customer Number.
FEAT	DGT	Digit Manipulation data block feature.
...		
DMI	1-999 1-255 1-31	Enter the Digit Manipulation table. 1-999 = for Flexible Numbering Plan 1-255 = for BARS/NARS 1-31 = for Coordinated Dialing Plan. The maximum number of Digit Manipulation tables is defined using prompt MXDM, in the ESN data block.
DEL	(0)-19	Enter the number of leading digits to be deleted. Enter 0 (the default) for none.
INST	x...x x...x*y...y X	Enter the number of leading digits to be inserted. x...x = 1-31 x...x*y...y = for Special Common Carriers (SCCs), 1-30, including access number (x...x), delimiter (*), and authorization code (y...y) Enter X for none.
...		

LD 87 - For a Free Special Number Screening Index, configure the expansion pertaining to the maximum number of Special Numbers to be screened.

Prompt	Response	Description
REQ	NEW, CHG	Add new data, or change existing data.
CUST	0	Customer Number.
FEAT	FSNS	Free Special Number Screening.
FSNI	1-255	Free Special Number Screening Index.
SPN	1-19	Special Number to be screened.
...		

LD 87 - For a Trunk Steering Code, configure the expansion pertaining to the maximum number of Flexible Numbers.

Prompt	Response	Description
REQ	NEW, CHG	Add new data, or change existing data.
CUST	0	Customer Number.
FEAT	CDP	Coordinated Dialing Plan.
TYPE	TSC	Trunk Steering Code.
TSC	1-7	Trunk Steering Code.
- FLEN	0-24	Flexible Number.
...		

LD 90 - For Network Translation tables, configure the expansion pertaining to the maximum number of Special Numbers digits, the maximum number of digits for Flexible Numbers, the maximum number of Supplemental Digit Restriction and Recognition digits per entry, and the addition of “allow” (ALOW) as a new Supplemental Digit Restriction and Recognition type.

Prompt	Response	Description
REQ	NEW, CHG	Add new data, or change existing data.
CUST	0	Customer Number.
FEAT	NET	Network Translation Tables data.
...		
TYPE	SPN	Special Number Translation.
SPN	xxxx xxxx x...x	Enter the Special Number Translation digits. Up to 19 digits may be entered. The SPN digits must be entered in groups of at most four digits, separated by a space. Up to five groups can be entered. The restriction is removed of allowing one less digit if the first digit of a digit string is not “1”.
- FLEN	(0)-24	Enter the number of Flexible Digits (the number of digits that the system expects to receive before accessing a trunk, and outpulsing the digits.)
...		
- SDRR	 DENY LDID LDDD DID DDD ITED ARRN STRK ALOW	Type of Supplemental Digit Restriction and Recognition. DENY = restricted codes LDID = recognized local DID codes LDDD = recognized local DDD codes DID = recognize remote DID codes DDD = recognize remote DDD codes ITED = incoming trunk group exclusion digits ARRN = alternate routing remote number STRK = allowed codes for ADM/MDM ALOW = allowed codes

		The maximum number of digits entered in response to the DENY, LDID, LDDD, DID, DDD, and ALOW prompts, which follow, must be lesser than 10, or 7-m (8-m for 1+ dialing) for Central Office translation data (NXX), 10-m (11-m for 1= dialing) for Numbering Plan Area Code translation data (NPA), or 19-m for Special Numbers Translation data (SPN), where m = the number of digits entered for the prompt NXX, NPA, or SPN. These numbers are no longer required to be leftwise unique. For non leftwise unique numbers, the longer number takes precedence over the shorter number. However, the exact same numbers (non leftwise unique and the same length) are still blocked.
- - DENY	x...x	Restricted number to be denied.
- - LDID	x...x	Local DID number to be recognized.
- - LDDD	x...x	Local DDD number to be recognized.
- - DID	x...x	Remote DID number to be recognized.
- - DDD	x...x	Remote DDD number to be recognized.
- - ALOW	x...x	Code to be allowed.

Feature Operation

No specific operating procedures are required to use this feature.

Electronic Lock Network Wide/Electronic Lock on Private Lines

The basic Electronic Lock feature has been enhanced to provide the following capabilities:

— The feature can be implemented network wide.

— The capability to define (for the locked sets), on a per customer basis, a Controlled Network Class of Service (CNCS) different from the Network Class of Service (NCOS), which is defined on a per set basis.

— Locking can be implemented for Private DNs.

In a Meridian Customer Defined Network (MCDN) environment, Electronic Lock Network Wide can be used to change the Class of Service of a set in a remote location. Electronic Lock Network Wide is activated or deactivated from any node by dialing the Electronic Lock Flexible Feature Code (FFC), the password, and the DN of the set to be changed. Since the password length defined at the destination node is not known at the originating node, the Station Control Password (SCPW) length (defined in LD 15) must be defined the same for all network nodes.

If the originating node has the FFC Confirmation Tone option selected, a confirmation tone is given when the feature is successfully activated or deactivated. Overflow tone is given if the operation is unsuccessful. There is no FFC verify code for Electronic Lock.

When a locked set makes an outgoing trunk call, if Controlled Network Class of Service is defined, the Network Class of Service (NCOS) defined by CNCS is used instead of the NCOS defined in LD 10 or 11 for the set. If network signaling is configured for the trunk that normally transmits the NCOS of the set between Electronic Switched Network (ESN) nodes, the CNCS is transmitted instead of the NCOS. This prevents a locked set from reaching the exchange network by tandeming through a TIE trunk using ESN.

A new prompt (PELK) is introduced in the Customer Data Block to implement Electronic Lock on private lines. If this option is enabled, an outgoing call on a private line of a locked set is subject to the same restrictions as all other DNs on the set. The same intercept treatment would be given as for a regular DN. The restrictions for private lines, as well as other DN keys on the set, are controlled by the Controlled Class of Service (CCOS), and by the CNCS if defined. Therefore, for outgoing calls, the Class of Service restrictions and/or New Flexible Code Restriction (NFCR) apply to private line keys on locked sets. Only outgoing calls are affected. The Class of Service of a non-locked set has no affect on private lines.

Operating parameters

The Network Dialing Plan must be either a Coordinated Dialing Plan (CDP) or a Uniform Dialing Plan (UDP).

The set password lengths must be equal for all nodes in the network.

Network wide operation is only supported through an MCDN ISDN network.

The Electronic Lock feature must be equipped on both originating and remote nodes.

The FFC used is defined on the node from which Network Electronic Lock is being activated. To activate or deactivate Network Electronic Lock from any remote node, the user has to use the FFC Electronic Lock Activate (ELKA) or Electronic Lock Deactivate (ELKD) code defined on that remote node.

An analog (500/2500 type) telephone with a private line DN or a Meridian Digital Telephone set with a private line on the Prime DN cannot be locked.

Feature interactions

Automatic Call Distribution (ACD)

An ACD set cannot be locked.

Call Forward (CFW)
Call Forward No Answer (CFNA)

For Call Forwarding, the COS and NCOS used for the forwarding call can be taken from either the forwarding set or from the forwarded set, depending on the option defined in the Customer Data Block.

For example, set B call forwards all calls to an external trunk. Set A calls set B. If OPT = CFF in LD 15 (Call Forward forwarded to party's COS and NCOS), the COS and NCOS of set B are used for forwarding the call to the trunk. If OPT = CFO (Call Forward originating party's COS and NCOS), the COS and NCOS of set A are used for forwarding the call to the trunk.

Direct Inward System Access (DISA)

The Electronic Lock feature cannot be activated or deactivated when accessing the node through DISA.

Electronic Switched Network Authcode

If a station user enters an authcode on the set, regardless of the status of the set being locked or not, the NCOS defined for the authcode is used. The ESN Authcode feature overrides the Electronic Lock Network Wide feature.

Flexible Numbering Plan

If a network is equipped with a flexible numbering plan (i.e., not all the network DNs are the same length), hanging up before the usual end-of-dialing timeout cancels the request for activation or deactivation of Electronic Lock. Dialing an octothorpe (#) after the network DN will cause the request for activation or deactivation of the Electronic Lock to be sent immediately, instead of waiting for the usual end-of-dialing timeout to send it.

Multiple Appearance DN

The same locked or unlocked state applies to all Terminal Numbers with the same primary DN and the same SCPW. Terminal Numbers with the same DN, but not having the same SCPW, cannot be locked or unlocked.

New Flexible Code Restriction (NFCR)

With NFCR, toll denied stations are allowed or denied calling privileges according to the Facility Restriction Level (FRL) assigned to the NCOS defined in the protected line block. For a locked set, NCFR uses the FRL assigned to the CNCS to determine its calling privileges if one is defined; if no CNCS is defined, the NCOS of the locked set will be used.

Scheduled Access Restrictions (SAR)

The SAR feature overrides Electronic Lock.

Feature packaging

Electronic Lock Network Wide/Electronic Lock on Private Lines is packaged under Flexible Feature Codes (FFC) package 139.

Use of this feature requires the following additional packages:

— Controlled Class of Service (CCOS) package 81

— Network Class of Service (NCOS) package 32

— Integrated Services Digital Network (ISDN) package 145.

Feature implementation

Electronic Lock Network Wide

Use the following overlays to implement Electronic Lock Network Wide.

LD 15 – Modify Customer Data Block for Controlled Class of Service data as follows

Prompt	Response	Description
REQ:	CHG	Change existing data block.
TYPE:	CCS_DATA	Controlled Class of Service data.
CUST	0	Customer number.
- CCRS	aaa	Controlled class of service (CCOS) Restricted Service.
- ECC1	aaa	Enhanced Controlled Class of Service level 1.
- ECC2	aaa	Enhanced Controlled Class of Service level 2.
- CNCS	0-99	Network Controlled Class Of Service for Electronic Lock.
- PELK	YES (NO)	Enter YES for Electronic Lock on a private line; otherwise, enter NO.

LD 15 – Modify Customer Data Block for Flexible Feature Code data as follows:

Prompt	Response	Description
REQ:	CHG	Change existing data block.
TYPE:	FFC_DATA	Flexible Feature Code data.
CUST	0	Customer number.
- CCRS	aaa	Controlled class of service (CCOS) Restricted Service.
- SCPL	0-8	Station Control Password Length.
- SBUP	(YES) NO	Enable use of station control passwords for set based administration user level access
- - PWD2	xxxx	PWD2 password for confirmation
- FFCS	(NO) YES	Change Flexible Feature Code end-of-dialing indicator
- - STRL	1-3	String Length of end-of-dial indicator
- - STRG	xxx	String to indicate end-of-dialing
- ADLD	(0)-20	Auto Dial Delay in seconds
- SCPL	0-8	Station Control Password Length

LD 10 – Set the Station Control Password and Controlled Class of Service Allowed for each analog (500/2500 type) telephone.

Prompt	Response	Description
REQ	NEW,CHG	Add,Change.
TYPE	500	Telephone type.
CUST	0	Customer Number.
TN	c u	Terminal number (card and unit).
SCPW	xxxxxxxx	Station Control Password (1 to 8 digits, as defined in LD 15).
CLS	CCSA	Controlled Class of Service Allowed.

LD 11 – Set the Station Control Password and Controlled Class of Service Allowed for each Option11C Compact proprietary telephone.

Prompt	Response	Description
REQ	NEW,CHG	Add,Change.
TYPE	aaaa	Telephone type, where aaaa = 2006, 2008, 2216, 0r 2616.
CUST	0	Customer Number.
TN	c u	Terminal number (card and unit).
SCPW	xxxxxxxx	Station Control Password (1 to 8 digits, as defined in LD 15).
CLS	CCSA	Controlled Class of Service Allowed.

LD 57 – Configure the Flexible Feature Codes for Electronic Lock.

Prompt	Response	Description
REQ	NEW/CHG	Enter new/change data.
TYPE	FFC	Flexible Feature Codes.
CUST	0	Customer Number.
FFCT	YES	Provide FFC confirmation tone.
CODE	ELKA	New/change Electronic Lock Activate FFC.
ELKA	xxxx	Enter the new or changed Electronic Lock Activate FFC
ELKA	<cr>	
CODE	ELKD	New/change Electronic Lock Deactivate FFC.
ELKD	xxxx	Enter the new or changed Electronic Lock Deactivate FFC
ELKD	<cr>	

LD 87 – In the ESN 2 overlay, define all NCOS to be used.

Prompt	Response	Description
REQ	NEW CHG	Enter new data Change existing data.
CUST	0	Customer Number.
FEAT	NCTL	Network Control.
...		
NRNG	0-99	NCOS range.
NCOS	0-99	Network Class of Service group number.
...		
– FRL	(0)-7	Facility Restriction level.

Electronic Lock on Private Lines

Use the following overlays to implement Electronic Lock Network on Private Lines.

LD 15 – Modify Customer Data Block for Controlled Class of Service data as follows

Prompt	Response	Description
REQ:	CHG	Change existing data block.
TYPE:	CCS_DATA	Controlled Class of Service data.
CUST	0	Customer number.
- CCRS	aaa	Controlled class of service (CCOS) Restricted Service.
- ECC1	aaa	Enhanced Controlled Class of Service level 1.
- ECC2	aaa	Enhanced Controlled Class of Service level 2.
- CNCS	0-99	Network Controlled Class Of Service for Electronic Lock.
- PELK	YES	Electronic Lock on Private Lines.

LD 15 – Modify Customer Data Block for Flexible Feature Code data as follows

Prompt	Response	Description
REQ:	CHG	Change existing data block.
TYPE:	FFC_DATA	Flexible Feature Code data.
CUST	0	Customer number.
- CCRS	aaa	Controlled class of service (CCOS) Restricted Service.
- SCPL	0-8	Station Control Password Length.
- SBUP	(YES) NO	Enable use of station control passwords for set based administration user level access
- - PWD2	xxxx	PWD2 password for confirmation
- FFCS	(NO) YES	Change Flexible Feature Code end-of-dialing indicator
- - STRL	1-3	String Length of end-of-dial indicator
- - STRG	xxx	String to indicate end-of-dialing
- ADLD	(0)-20	Auto Dial Delay in seconds
- SCPL	0-8	Station Control Password Length

LD 16 – Set the Facility Restriction Level (FRL) number and the New Flexible Code Restriction (NFCR) tree number for private lines.

Prompt	Response	Description
REQ	CHG	Change.
TYPE	RDB	Route Data Block.
...		
PRIV	YES	Private Line Route.
...		
FRL	0-7 0-254	Facility Restriction Level (FRL) and New Flexible Code Restriction (NFCR) tree number.

LD 10 – Set the Station Control Password and Controlled Class of Service Allowed for each analog (500/2500 type) telephone.

Prompt	Response	Description
REQ	NEW,CHG	Add,Change.
TYPE	500	Telephone type.
CUST	0	Customer number.
TN	c u	Terminal number (card and unit).
SCPW	xxxxxxxx	Station Control Password (1 to 8 digits, as defined in LD 15).
CLS	CCSA	Controlled Class of Service Allowed.

LD 11 – Set the Station Control Password and Controlled Class of Service Allowed for each Option11C Compact proprietary telephone.

Prompt	Response	Description
REQ	NEW,CHG	Add,Change.
CUST	0-31	Customer number.
TYPE	aaaa	Telephone type, where aaaa = SL1, 2006, 2008, 2009, 2016, 2018, 2112, 2216, 2317, 2616, or 3000.
TN	c u	Card, and unit (Option 11).
SCPW	xxxxxxxx	Station Control Password (1 to 8 digits, as defined in LD 15).
CLS	CCSA	Controlled Class of Service Allowed.
...		
KEY	xx PVR yyyy(yyy)	Key number and DN for Private Line Ringing, where xx = the key number and yyyy(yyy) = the Private Line Ringing DN (up to four digits; up to seven digits if the Directory Number Expansion (DNXP) package 150 is equipped). Private Line Directory Number (PRDN) must be defined in LD 14.

Feature operation

Electronic Lock Network Wide

In this example, an MCDN ISDN network is set up connecting Node 1 to Node 2. Set A is the Controlling set. Set B is the set to be locked and unlocked by Set A. The digits that set A would dial to ring set B are to be in the format of a CDP or UDP dialing plan. This is standard dialing for ISDN features.

Figure 4- Network Electronic Lock

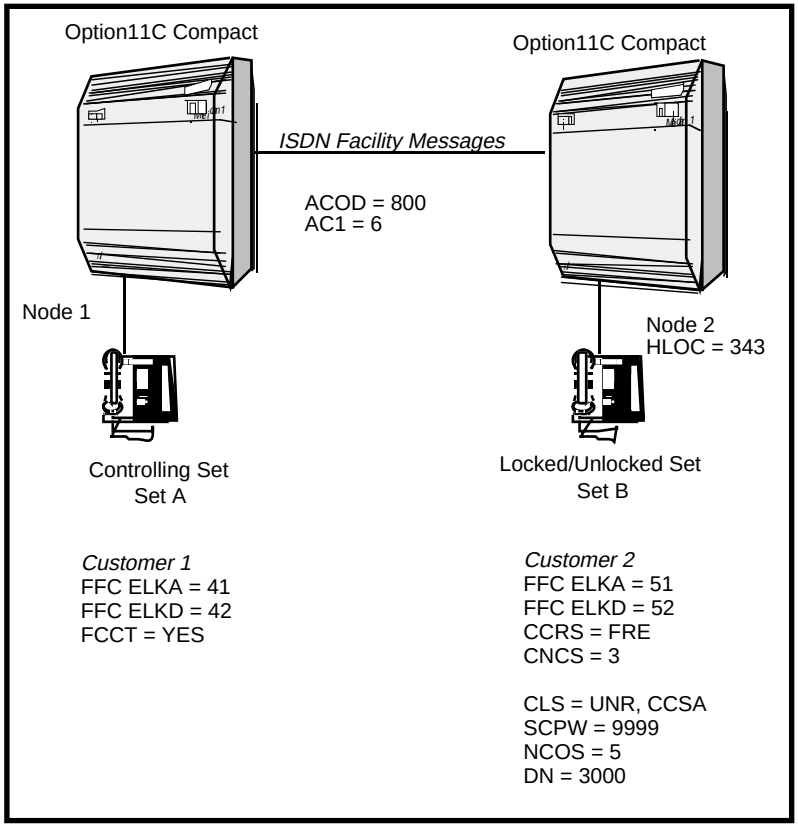

To lock set B (in Node 1) from set A (in Node 2), the user goes off-hook and dials the Electronic Lock Activate (ELKA) FFC defined in the Customer Data Block of Node 1, followed by the Station Password (SCPW) defined for set B, and the digits that set A would normally dial to ring set B (e.g., 41 + 9999 + 6-343-3000). If the FFCT option is configured as YES in LD 57 in the Customer Data Block of Node 1, confirmation tone is given to set A to confirm that the lock operation has been successful. Set B becomes locked if it was previously in an unlocked state.

If Set B was already locked, the above operation is ignored and Set B remains locked; however, a confirmation tone is provided to verify that the set is locked.

If the lock operation was unsuccessful, overflow tone is given.

To unlock set B (in Node 1) from set A (in Node 2), the user goes off-hook and dials the Electronic Lock Deactivate (ELKD) FFC defined in the Customer Data Block of Node 1, followed by the SCPW defined for set B and the digits that set A would normally dial to ring set B (e.g., 42 + 9999+ 6-343-3000). If the FFCT option is configured as YES in LD 57 in the Customer Data Block of Node 1, confirmation tone is given to set A to confirm that the unlock operation has been successful. Set B becomes unlocked if it was previously in a locked state.

If Set B was already unlocked, the above operation is ignored and Station B remains unlocked; however, a confirmation tone is provided to verify that the set is unlocked.

If the unlock operation was unsuccessful, overflow tone is given.

Electronic Lock on Private Lines

Feature operation of Electronic Lock for Private Lines is the same as for the basic Electronic Lock feature.

Controlled Network Class of Service

No specific operating instructions are required to use Controlled Network Class of Service.

ESN on PRI

Most Electronic Switched Network (ESN) services are available over a DTI or PRI network, with the following exceptions:

— Network Call Transfer (NXFER)

— Coordinated Call Back Queuing (CCBQ)

— CBQ to Conventional Main (CBQCM)

— Off-Hook Queuing (OHQ)

Network Class of Service (NCOS) is part of the ESN feature, and allows control of the following:

— User access to routes

— Eligibility of queuing for a user

— Eligibility for a user to receive Expensive Route Warning Tone (ERWT)

— Eligibility to access Network Speed Call (NSC)

An NCOS is assigned to every user on the Option11C Compact/SL-1 system. Depending on the NCOS assigned, users are either allowed or denied to place local, long distance and/or International calls. During a tandem call, DTI/PRI sends the NCOS of the user across the DTI/PRI link as a prefix to the dialed number. This allows network access control to be based on a consistent set of NCOSs for calls originating anywhere on the network.

Northern Telecom's ISDN/PRI networking feature development is based on Network Automatic Route Selection (NARS) and/or Coordinated Dialing Plan (CDP). The NARS feature distinguishes between private and public network calls using the first 2 to 3 digits dialed. This digit processing allows a NARS switch to process the call immediately upon dialing the last digit and thus results in instantaneous sending of the call setup message.

CDP uses Distant Steering Codes (DSC) and Trunk Steering Codes (TSC). DSC codes are recognized in software and also provide instantaneous cut-through. However, TSC and the number that follows varies in length, therefore end of dialing timers are used.

ISDN with CDP or NARS provides the exact display of the CLID across the network. However, when some switches use CDP and the others use NARS, the correct display of the CLID may not make sense. The NARS switches will be sending the location code plus the extension number, whereas the CDP switches will be sending only the CDP number. In some networks, the CDP number does not contain enough information to be able to dial back the calling number if necessary.

Option 148 (Advanced Network Features) provides Network Ring Again (NRAG). Because of NRAG and other features (NACD, NMS, TRO), and the complexity of inserting and deleting digits in the number dialed in an all CDP or NARS or combination CDP/NARS network, Northern Telecom requires that every switch in the network be equipped with either NARS or CDP software.

With the CDP Expansion enhancement, ISDN networks may now support a 3 to 10 digit Coordinated Dialing Plan (CDP).

The Automatic Insertion of ESN Access Codes feature (INAC) provides greater flexibility in designing network numbering plans. This enhancement allows either AC1 or AC2 to be used as the access code for private network and long distance calls. Previously, only AC1 could be used for these types of calls. Advanced Networking Features such as NACD and NMS require that INAC be implemented, rather than using Digit Manipulation Tables to insert the appropriate ESN Access Code.

Package Requirements

ESN on PRI/ISL requires the following:

ISDN	package 145
PRI	package 146
NARS	package 58 and/or CDP package 59 and NSIG package 37

Flexible Night Service

Night Service can only be used via the customer data block since there is no NITE prompt in the ISDN ISA trunk data block. See the ISA Feature Description earlier in this chapter.

Idle Extension Notification

This feature provides the attendant with the ability to be notified when a busy extension becomes idle. A typical application of this feature is in the case of the attendant wanting to leave an urgent message to someone who is on their extension, but does not want to break-in to their call.

The Idle Extension Notification feature is not supported on ACD DNs.

— An Idle Extension Notification call cannot be placed on hold by the attendant. If the attendant attempts to place an Idle Extension Notification call on hold before the Release key is pressed, the Idle Extension Notification request is canceled and the call is disconnected. An answered Idle Extension Notification recall cannot be placed on hold until after the SACP key is pressed to ring the extension.

— When an attendant has requested an Idle Extension Notification, it can be canceled by then pressing the Position Busy key. This will also cancel all other Idle Extension Notification requests.

— Idle Extension Notification and pre-dial Break-In are mutually exclusive. It is possible to press the Break-In key, the DN of a busy extension (to override call forward, for example), and then press the SACP key to request Idle Extension Notification. While the SACP lamp is lit, it is not possible to press the Break-In key to complete the Break-In. Conversely, if a Break-In conference is underway, it is not possible to activate Idle Extension Notification by pressing the SACP key.

  If the SACP lamp is lit during the pre-dial Break-In sequence, the only available possibilities are: to press the Release key to request for Idle Extension Notification; to press the SACP key again to remove the request; or to press the Release SRC key to release the source without

requesting Idle Extension Notification. If the Idle Extension Notification request is removed by pressing the SACP key a second time (or due to any other limitation of Idle Extension Notification), Break-In is then possible.

It is not possible to do a Post-Dial Break-In on the source side of the attendant, therefore it is not possible to request for Idle Extension Notification in conjunction with Post-Dial Break-In. This means that it is not possible to a Break-In after an Idle Extension Notification recall is answered if the wanted extension becomes busy again.

— When an extension that is being supervised for an Idle Extension Notification to the attendant becomes idle, it is kept busy from receiving any incoming calls. The lamp on the attendant console for that DN will display a busy status, according to the parameters of the Busy Lamp Field/Enhanced Busy Lamp Field feature.

— It is not possible to request for Idle Extension Notification if the Busy Verify feature has been activated after the Busy Verify key is pressed.

— When an extension that is being supervised for Idle Extension Notification becomes idle, it has the ability to make outgoing calls. If Call Forward All Calls or Intercept Call Forward are activated at the extension before the attendant presses the SACP key to ring that extension, the attendant's call will be forwarded to the Call Forward destination. The attendant display will show both the call forward DN as well as the original extension's DN.

  If the Call Forward DN is busy, SACP can be activated towards the Call Forward DN, if all the requirements for allowing Idle Extension Notification are met by this DN.

— If an extension has Call Waiting configured, it is not possible to request Idle Extension Notification. Call Waiting has precedence over the Idle Extension Notification feature.

— When an extension is blocked for receiving calls due to the Idle Extension Notification feature, camp-on is not possible.

— It is not possible to request for Idle Extension Notification towards an extension that has the Do-Not-Disturb feature activated.

— It is not possible to request for Idle Extension Notification towards an extension that is Second Degree Busy. Idle Extension Notification is only possible on an extension that is First Degree Busy.

— It is not possible to set Idle Extension Notification towards a pilot DN.

— If the attendant dials a busy extension that has Hunting configured and where all the DNs in the hunt chain are busy, Idle Extension Notification may be requested towards the dialed extension.

— It is not possible to request for Idle Extension Notification towards an extension that has the Make Set Busy feature activated.

— If Idle Extension Notification is requested for a Multiple Call Arrangement DN, the first extension with this DN that becomes idle will cause the recall. This extension will also be blocked from receiving calls.

— An Idle Extension Notification recall will always recall to the same attendant, regardless of the configuration of the Recall To Same Attendant (RTSA) feature.

— During the time that an extension is supervised or temporarily blocked from receiving calls due to the Idle Extension Notification feature, it is possible to activate Ring Again towards that extension. It is also possible to request for Idle Extension Notification on an extension that is supervised for Ring Again. When the extension becomes idle, the Idle Extension Notification will be served first.

Package Requirements

Feature	Package Number
ISDN	145
NAS	159
SACP	181
SUPP	131
BKI	127

In-Band ANI; (Automatic Number Identification)

In-Band ANI is a capability which allows an Inter-Exchange Carrier such as MCI or Sprint to send the Option11C Compact the calling party's 10 digit phone number through standard digital trunks (T1s). The Option11C Compact can then terminate the number to the following:

— The digit display of an auto terminating ACD set

— A Meridian Link connection

— A CDR record

Note: In-Band ANI is only supported via MCI using the DMS-250 Inter-exchange switch.

A three or four digit Dialed Number Identification Service (DNIS) can be delivered instead of the ANI digits if required.

Package Requirements

The In-Band ANI feature requires software options; 40, 98, 145, 146 and 149.

Incoming Trunk Programmable Calling Line Identification

The Incoming Trunk Programmable Calling Line Identification feature allows a billing number to be assigned to incoming trunk routes. The billing number length can be from one to 16 digits, and is only used when the incoming trunk terminates to a PRI trunk connected to a Public Exchange/Central Office. The billing number is inserted into the Calling Line Identification (CLID) field of the outgoing PRI trunk route.

An option is also provided that allows the billing number to have the "Presentation Allowed" field in the outgoing route CLID to be allowed or denied. This will allow or deny the display of the billing number when the call terminates on a set off the Central Office.

In addition, incoming routes that support CLID can have the Billing Number replace the CLID for tandeming only.

Operating parameters

M911 trunks do not support the billing number.

If the route defined is both incoming and outgoing, the billing number will only be used for incoming calls to support outgoing Integrated Services Digital Network (ISDN) routes.

The billing number is not unique; the same number can be programmed for multiple routes.

The billing number is only inserted on tandem calls for supporting trunks to the Central Office. Therefore, the display of billing number on sets is not provided, and the CDR output will not show the billing number.

There is no control over how the Central Office uses the billing number. The presentation indicator is configurable to either allow or deny the displaying of the billing number. This is only used for the outgoing call to the Central Office which means when the call terminates on a set off the Central Office the billing number will be displayed at that set if the option is set (BDSP = YES).

Call redirection is not supported (e.g., if the incoming call terminates on the Option11C Compact and is transferred, or call forwarded to the Central Office, the billing number is not passed on to the Central Office).

Feature interactions

Not applicable.

Feature packaging

The Incoming Trunk Programmable Calling Line Identification feature is part of basic X11 27 system software. The following software option package is required to activate this feature:

— Integrated Services Digital Network (ISDN) package 145.

For ISDN and networking, some or all of the following packages may be required:

— Basic Alternate Route Selection (BARS) package 57

— Network Alternate Route Selection (NARS) package 58

— Coordinated Dialing Plan (CDP) package 59

— Basic Routing (BRTE) package 14, and

— Network Class of Service (NCOS) package 32.

Feature implementation

LD 16 – Configure the incoming route.

Prompt	Response	Description
REQ	NEW, or CHG	New, or Change.
TYPE	RDB	Route data block.
...		
BILN	(NO), YES	Billing number (is not) is required.
BLEN	1-(10)-16	Billing number length. The default is 10 digits.
BNUM	x...x	Billing number (1 to 16 digits).
BDSP	(NO), YES	(Do not) display Billing Number.

LD 16 – Configure the outgoing route.

Prompt	Response	Description
REQ	CHG	Change.
TYPE	RDB	Route data block.
...		
ISDN	YES	ISDN route must be YES.
...		
IFC	xxxx	Select the appropriate interface type for route (cannot be SL1 or IDA).
SBN	(NO), YES	(Do not) send billing number. Must be set to YES.

Feature operation

No specific operating instructions are required to use this feature.

ISDN Calling Line Identification enhancements

The capabilities introduced by the ISDN Calling Line Identification (CLID) Enhancements greatly increases the functionality of CLID within any ISDN network.

These enhancements replace the previous method of constructing CLID, and allow much more flexibility when programming CLID for any telephone set on a Option11C Compact. Prior to the feature introduction, a CLID was defined as either a Listed Directory Number (LDN) or Primary Directory Number (PDN). The contents of these data fields were used to generate the CLID for a call. The CLID could only be built from key 0 of a set. This meant that regardless of what key was used to make a call, it was the CLID for key 0 that was sent. Also, only one office code and one location code could have been assigned in the CLID for a customer.

CLID is now table-driven (when LD 15 is loaded, a customer can configure a CLID table), and virtually any of the information contained in the fields of the CLID table can now be programmed against any DN or DN key, on a per set basis. This means that the CLID that is sent from a set is now predicated on what is in the CLID table, rather than the LDN or PDN. That is, a CLID for any key is now built by taking the information contained in a particular field in the CLID table and adding that information to the key's DN. A multi-line set can now have DN keys that each has its own CLID. Or, as explained in "How CLID entries are assigned to a set" on page 97, the CLID of any one key could, on a set, be programmed to use the CLID of any other key on the set.

Also, the Option11C Compact can now support multiple office codes, location codes and steering codes in CLID (this is more fully explained in the section "How a CLID table is built", which follows.) This means that any telephone set on one Option11C Compact can send a CLID that will have calls returned to another Option11C Compact. This type of configuration would typically be used in cases where a customer would want calls to be returned to only one central location.

> ***Note:*** Since the system does not perform verification of CLID entries that are defined in a CLID table, it is the responsibility of the system administrator to ensure that DN keys are programmed correctly.

How a CLID table is built

New prompts have been added to LD 15 that create a CLID table for a customer. This table contains CLID ‘entries’ (up to 4,000.) Each entry contains unique information pertaining to CLID, as explained in the following sections.

North American Numbering Plan

For users of a North American Numbering Plan, the Option11C Compact can now support multiple Home Central Office Codes (HNXXs), Home Numbering Plan Area (HNPA) codes, Home Location Codes (HLOCs) and Local Steering Codes (LSCs), on a DN or DN key basis.

For a North American Numbering Plan, each CLID entry can contain the following:

— a one-six digit national code for a home national number (HNTN);

— a one-12 digit local code for a home local number (HLCL), or a one-12 digit Listed Directory Number for a switchboard;

— a one-seven digit Home Location Code (HLOC); and

— a one-seven digit Local Steering Code (LSC).

International Numbering Plan

For users of an International Numbering Plan, the Option11C Compact can now support multiple Prefix 1 (PFX1) and Prefix 2 (PFX2) contents, and multiple Home Location Codes (HLOCs) and Local Steering Codes (LSCs), on a DN or DN key basis.

For an International Numbering Plan, each CLID entry can now contain the following:

— a one-six digit national code for a home national number (HNTN), which is the equivalent of PFX1;

— a one-12 digit local code for a home local number (HLCL), which is the equivalent of PFX2, or a one-12 digit Listed Directory Number for a switchboard;

— a one-seven digit Home Location Code (HLOC);

— a one-seven digit Local Steering Code (LSC).

Another new capability, which applies to both the North American Numbering Plan and the International Numbering Plan, pertains to how the HLCL is constructed. A new prompt, DIDN (which signifies “use DN as a DID number”) in LD 15, allows the HLCL to be built either using the digits in the HLCL plus the digits of the active key (if DIDN is set to “YES” - the DN is considered to be a DID number and is included in the CLID), or only the digits in the HLCL (if DIDN is set to “NO” - the DN is not included in the CLID since it is not a DID number), or based on a search on the DN keys, beginning from key 0, to find the CLID to be used (DIDN is set to “SRCH”.) Please refer to Examples one to six in the “Examples of CLID generation” section starting on page 98.

How CLID entries are assigned to a set

Once the CLID table has been built for a customer, any CLID entry can be assigned to any set, on a per DN or DN key basis (any DN or DN key can be programmed against the information defined for any CLID entry in the CLID table.) This means that for a multi-line set, DN key 0 may send one CLID (the information contained in one CLID entry), DN key 1 may send a different CLID (the information contained in another CLID entry), and DN key 2 may send yet another CLID (the information contained in a third CLID entry). Therefore, a customer may now send different CLIDs from the same set.

Another enhancement pertains to Option11C Compact proprietary sets. When configuring the CLID for a DN key in LD 11, the value entered against the KEY prompt may be a CLID table entry number (0-3999), which corresponds to a CLID entry in the CLID table or ‘D’. If ‘D’ is entered, the Option11C Compact initiates a search on the set for a DN key, starting from key 0. The first found CLID is then sent as the CLID of the active DN key. This means that a call can be made on one key, and the CLID of another key is sent. This configuration is typically used in an ACD or Hotline DN key application, where, for example, the CLID for a particular key is not desired to be sent. Please refer to Examples seven, eight and nine in the “Examples of CLID generation” on page 98.

Prior to the CLID enhancement, for feature keys, such as the Call Transfer key (TRN), the Conference key (AO3 and AO6) and the No-hold Conference key (NHC), the DN of key 0 was used as the CLID DN when a call transfer or conference occurred over ISDN trunks. With the CLID enhancement, the CLID DN is now associated with the active DN key, rather than key 0.

Examples of CLID generation

The examples that follow show CLID generation using different combinations of CLID entries for DN keys, for Private ESN UDP/CDP calls and for Public Local and Public National calls.

Most of the examples use a North American Numbering Plan, since the construction of CLID entries in a CLID is the same for both a North American Numbering Plan and an International Numbering Plan. In some cases, however, examples are provided that pertain to calls using an International Numbering Plan.

Therefore, unless otherwise stated in the headings, the examples provided in the following sections pertain to calls made using a North American Numbering Plan.

The CLID construction for a CLID call type is as follows:

— Private ESN UDP Number - HLOC + DN

— Private ESN CDP Number - LSC + DN

— Public Local Number - HLCL + DN

— Public National Number - HNTN + HLCL + DN

Please note that for calls made using the International Numbering Plan, the CLID for a Public Number is a National Number. For the examples of using the International Numbering Plan, the construction of a Public Local Number is for reference purposes only.

Example 1 - Set has DID number on DN key 0

In this example, the calls are made on DN key 0, which has a DID number. Key 0 is configured against CLID table entry 0, and key 1 is configured against CLID table entry 1.

Table 7
Set has DID number on DN key 0

CLID entry	HNTN (code for the home national number)	HLCL (code for the home local number), or LDN	DIDN (use the DN as the DID?)	HLOC (home location code)	LSC (local steering code)
Entry 0	415	940	YES	646	5
Entry 1	415	9699170	NO	646	5
Entry 2			SRCH	646	5

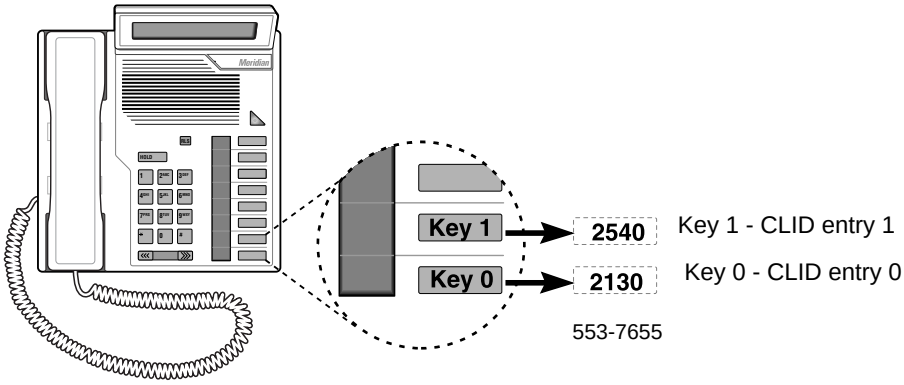

1 For a private ESN UDP call made from Key 0 (DN 2130) on the set, the CLID would be built as follows:

- HLOC from CLID entry 0 (646) plus the DN of the active key (2130).
- That is, the CLID that is sent would be 646 2130.

2 For a private ESN CDP call made from Key 0 (DN 2130) on the set, the CLID would be built as follows:

- LSC from CLID entry 0 (5) plus the DN of the active key (2130).
- That is, the CLID that is sent would be 5 2130.

3 For a public local call made from Key 0 (DN 2130) on the set, the CLID would be built as follows:

- HLCL from CLID entry 0 (940) plus the DN of the active key (2130).
- That is, the CLID that is sent would be 940 2130.

4 For a public national call made from Key 0 (DN 2130) on the set, the CLID would be built as follows:

- HNTN from CLID entry 0 (415) plus the HLCL from CLID entry 0 (940) plus the DN of the active key (2130).
- That is, the CLID that is sent would be 415 940 2130.

Example 2 - Set has DID number on DN key 0, International Numbering Plan.

In this example, the calls are made on DN key 0, which has a DID number. Key 0 is configured against CLID table entry 0, and key 1 is configured against CLID table entry 1.

Table 8
Set has DID number on DN key 0, for an International Numbering Plan.

CLID entry	HNTN (code for the home national number, equivalent to PFX1)	HLCL (code for the home local number, equivalent to PFX2), or LDN	DIDN (use the DN as the DID?)	HLOC (home location code)	LSC (local steering code)
Entry 0	2	6476	YES	578	6
Entry 1	2	64767676	NO	578	6
Entry 2			SRCH	578	6

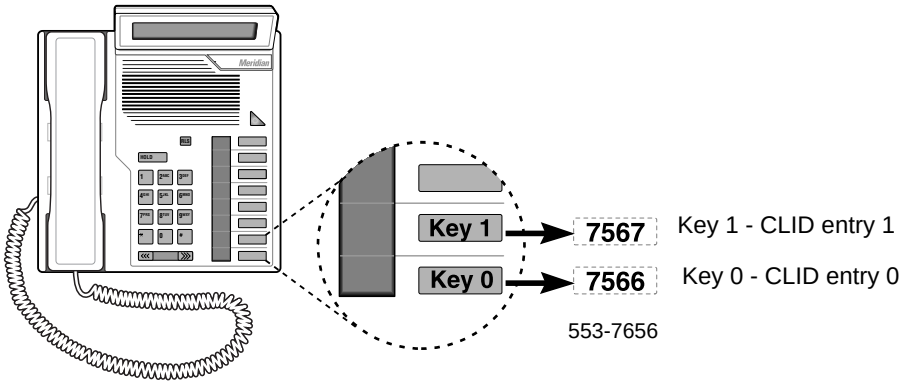

1 For a private ESN UDP call made from Key 0 (DN 7566) on the set, the CLID would be built as follows:

- HLOC from CLID entry 0 (578) plus the DN of the active key (7566).
- That is, the CLID that is sent would be 578 7566.

2 For a private ESN CDP call made from Key 0 (DN 7566) on the set, the CLID would be built as follows:

- LSC from CLID entry 0 (6) plus the DN of the active key (7566).
- That is, the CLID that is sent would be 6 7566.

3 For a public local call made from Key 0 (DN 7566) on the set, the CLID would be built as follows:

- HLCL from CLID entry 0 (6476) plus the DN of the active key (7566).
- That is, the CLID that is sent would be 6476 7566.

4 For a public national call made from Key 0 (DN 7566) on the set, the CLID would be built as follows:

- HNTN from CLID entry 0 (2) plus the HLCL from CLID entry 0 (6476) plus the DN of the active key (7566).
- That is, the CLID that is sent would be 2 6476 7566.

Example 3 - Set does not have a DID number on DN key 1 (DIDN set to NO)

In this example, the calls are made on DN key 1, which does not have a DID number. Key 0 is configured against CLID table entry 0, and key 1 is configured against CLID table entry 1, which has the DIDN option set to NO. This means that the CLID is built using only the digits defined in the HLCL field of table entry 1 (the DN of key 1 would not be sent in the CLID after the HLCL digits.)

Table 9
Set does not have a DID number on DN key 1 (DIDN set to NO).

CLID entry	HNTN (code for the home national number)	HLCL (code for the home local number), or LDN	DIDN (use the DN as the DID?)	HLOC (home location code)	LSC (local steering code)
Entry 0	415	940	YES	646	5
Entry 1	415	9699170	NO	646	5
Entry 2			SRCH	646	5

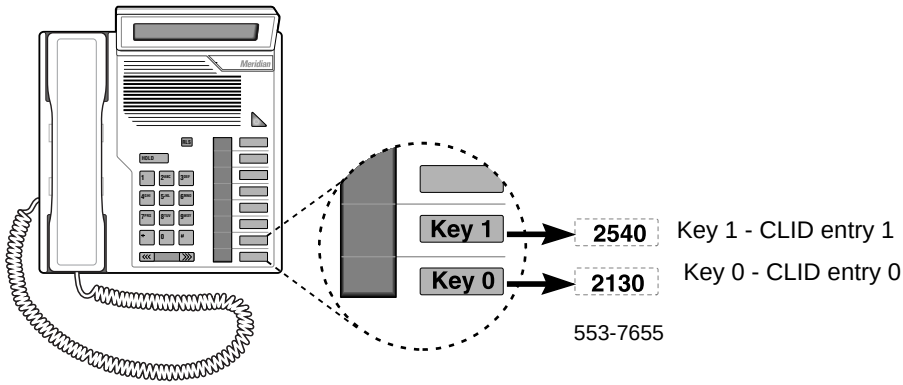

1 For a private ESN UDP call made from Key 1 (DN 2540) on the set, the CLID would be built as follows:

- HLOC from CLID entry 1 (646) plus the DN of the active key (2540).
- That is, the CLID that is sent would be 646 2540.

2 For a private ESN CDP call made from Key 1 (DN 2540) on the set, the CLID would be built as follows:

- LSC from CLID entry 1 (5) plus the DN of the active key (2540).
- That is, the CLID that is sent would be 5 2540.

3 For a public local call made from Key 1 (DN 2540) on the set, the CLID would be built as follows:

- HLCL from CLID entry 1 (9699170) - the DN of key 1 is not sent.
- That is, the CLID that is sent would be 9699170.

4 For a public national call made from Key 1 (DN 2540) on the set, the CLID would be built as follows:

- HNTN from CLID entry 1 (415) plus the HLCL from CLID entry 1 (9699170).
- That is, the CLID that is sent would be 415 9699170.

Example 4 - Set does not have a DID number on DN key 1 (DIDN set to NO), International Numbering Plan.

In this example, the calls are made on DN key 1, which does not have a DID number. Key 0 is configured against CLID table entry 0, and key 1 is configured against CLID table entry 1, which has the DIDN option set to NO. This means that the CLID is built using only the digits defined in the HLCL field of table entry 1 (the DN of key 1 would not be sent in the CLID after the HLCL digits.)

Table 10
Set does not have a DID number on DN key 1 (DIDN set to NO).

CLID entry	HNTN (code for the home national number)	HLCL (code for the home local number), or LDN	DIDN (use the DN as the DID?)	HLOC (home location code)	LSC (local steering code)
Entry 0	89	3505	YES	581	6
Entry 1	89	35052020	NO	581	6
Entry 2			SRCH	581	6

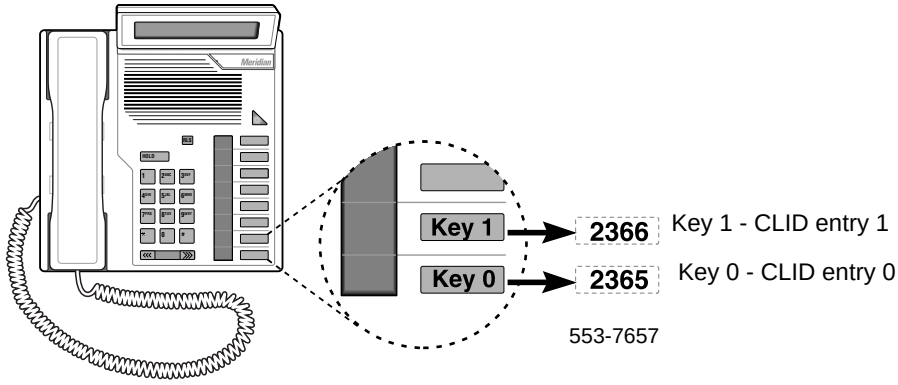

1 For a private ESN UDP call made from Key 1 (DN 2366) on the set, the CLID would be built as follows:

- HLOC from CLID entry 1 (581) plus the DN of the active key (2366).
- That is, the CLID that is sent would be 581 2366.

2 For a private ESN CDP call made from Key 1 (DN 2366) on the set, the CLID would be built as follows:

- LSC from CLID entry 1 (6) plus the DN of the active key (2366).
- That is, the CLID that is sent would be 6 2366.

3 For a public local call made from Key 1 (DN 2366) on the set, the CLID would be built as follows:

- HLCL from CLID entry 1 (35052020) - the DN of key 1 is not sent.
- That is, the CLID that is sent would be 35052020.

4 For a public national call made from Key 1 (DN 2366) on the set, the CLID would be built as follows:

- HNTN from CLID entry 1 (89) plus the HLCL from CLID entry 1 (35052020).
- That is, the CLID that is sent would be 89 35052020.

Example 5 - Set does not have DID number on DN key 1, SRCH option is used (DIDN is set to SRCH)

In this example, the calls are made on DN key 1, which does not have a DID number. Key 0 is configured against CLID table entry 0, and key 1 is configured against CLID table entry 2, which has the DIDN option set to SRCH.

This means that the CLID assigned for key 1 is constructed based on a search starting from key 0. When a CLID entry is found, which has DIDN set to YES (that would be key 0), the HLCL for that key is used in the CLID for key 1. Therefore, the CLID that is sent for key 1 would contain the HLCL of key 0 plus the DN of key 0.

Table 11
Set does not have a DID number on DN key 1, SRCH is used (DIDN is set to SRCH).

CLID entry	HNTN (code for the home national number)	HLCL (code for the home local number), or LDN	DIDN (use the DN as the DID?)	HLOC (home location code)	LSC (local steering code)
Entry 0	415	940	YES	655	6
Entry 1	415	9699170	NO	655	6
Entry 2			SRCH	655	6

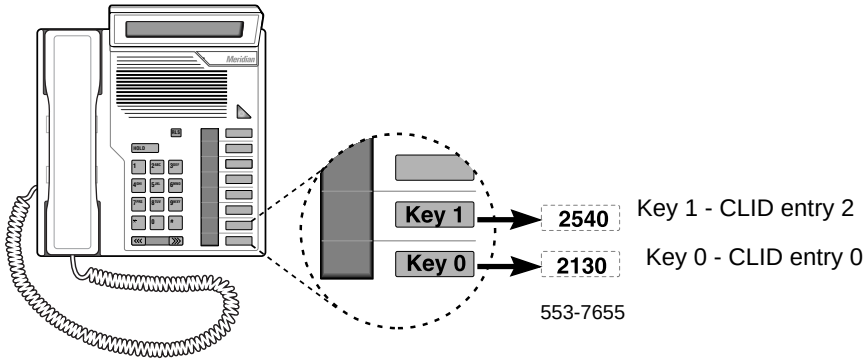

1 For a private ESN UDP call made from Key 1 (DN 2540) on the set, the CLID would be built as follows:

- HLOC from CLID entry 2 (655) plus the DN of the active key (2540).
- That is, the CLID that is sent would be 655 2540.

2 For a private ESN CDP call made from Key 1 (DN 2540) on the set, the CLID would be built as follows:

- LSC from CLID entry 2 (6) plus the DN of the active key (2540).
- That is, the CLID that is sent would be 6 2540.

3 For a public local call made from Key 1 (DN 2540) on the set, the CLID would be built as follows:

- HLCL of CLID entry with DIDN set to YES (the HLCL of key 0, which is 940) plus the DN key 0 (2130.)
- That is, the CLID that is sent would be 940 2130.

4 For a public national call made from Key 1 (DN 2540) on the set, the CLID would be built as follows:

- HNTN from CLID entry 0 (415) plus the HLCL from CLID entry 0 (940) plus the DN of key 0.
- That is, the CLID that is sent would be 415 940 2130.

Example 6 -Set does not have DID number on DN key 1, SRCH option is used but does not find a DID

In this example, the calls are made on DN key 1, which does not have a DID number. Key 0 is configured against CLID table entry 1, and key 1 is configured against CLID table entry 2, which has the DIDN option set to SRCH. This means that the CLID assigned for key 1 is constructed based on a search starting from key 0.

Key 0 is configured against table entry 1. Since table entry 1 has DIDN set to NO, the search next takes place on key 1, which is configured against table entry 2. Since table entry 2 does not have DIDN set to YES either, the search fails to find a CLID entry which has DIDN set to YES. This means that the CLID for key 1 is constructed using only the HLCL of the active DN (that is, the HLCL for key 1, which is the HLCL defined in table entry 2.)

Table 12
Set does not have a DID number on DN key 1, SRCH option fails to find a DID.

CLID entry	HNTN (code for the home national number)	HLCL (code for the home local number), or LDN	DIDN (use the DN as the DID?)	HLOC (home location code)	LSC (local steering code)
Entry 0	415	940	YES	646	5
Entry 1	415	9699170	NO	646	5
Entry 2	408	9885560	SRCH	655	6

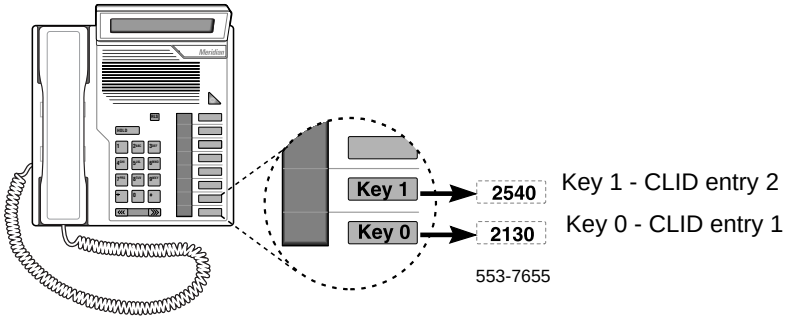

1 For a private ESN UDP call made from Key 1 (DN 2540) on the set, the CLID would be built as follows:

- HLOC from CLID entry 2 (655) plus the DN of the active key (key 1, 2540).
- That is, the CLID that is sent would be 655 2540.

2 For a private ESN CDP call made from Key 1 (DN 2540) on the set, the CLID would be built as follows:

- LSC from CLID entry 2 (6) plus the DN of the active key (2540).
- That is, the CLID that is sent would be 6 2540.

3 For a public local call made from Key 1 (DN 2540) on the set, the CLID would be built as follows:

- HLCL of CLID entry 2 (9885560) - since the search failed to find a DID number, only the HLCL of the active key (key 1, which is configured against table entry 2) is sent in the CLID. Since the DN of Key 1 (2540) is not a DID number, it is not sent in the CLID.
- That is, the CLID that is sent would be 9885560.

4 For a public national call made from Key 1 (DN 2540) on the set, the CLID would be built as follows:

- HNTN from CLID entry 2 (408) plus the HLCL from CLID entry 2 (9885560) - since the DN of Key 1 is not a DID number, the DN (2540) is not sent..
- That is, the CLID that is sent would be 408 9885560.

Example 7 - Set with DN KEY prompt of “D” on key 1

In this example, the calls are made on DN key 1, which has the KEY prompt set to “D” in LD 11. This means that a search is done on the set for a DN key, starting from key 0. The CLID of the found DN (key 0 in this case) key is used as the CLID of the active DN key; that is, the CLID for key 0 is used as the CLID for key 1.

Key 0 is configured against CLID table entry 0, and key 1 uses the CLID assigned to key 0.

Table 13
Set with DN KEY prompt of “D” on key 1.

CLID entry	HNTN (code for the home national number)	HLCL (code for the home local number), or LDN	DIDN (use the DN as the DID?)	HLOC (home location code)	LSC (local steering code)
Entry 0	415	940	YES	646	5
Entry 1	415	9699170	NO	646	5
Entry 2			SRCH	646	6

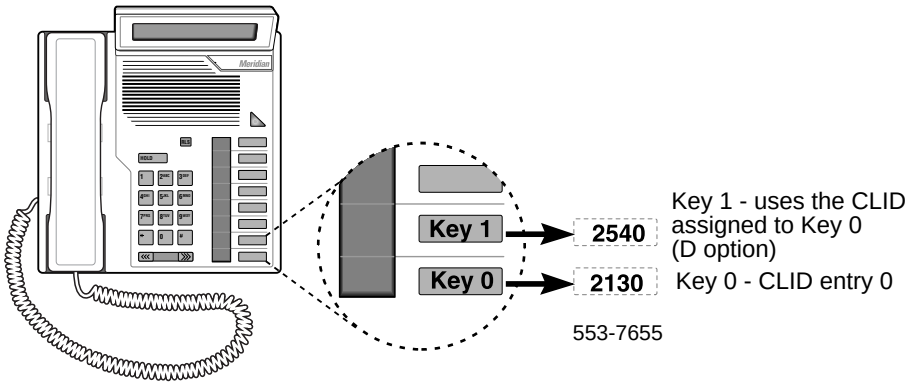

1 For a private ESN UDP call made from Key 1 (DN 2540) on the set, the CLID would be built as follows:

- HLOC from CLID entry 0 (646) plus the DN for key 0 (2130) - since the Key option has been set to ‘D’, a search is done from key 0 to find a DN key. The CLID for the found DN key is used as the CLID of active DN key - therefore, CLID for key 0 (the found DN) is used in the CLID for key 1. This also applies to cases 2, 3 and 4 which follow.
- Therefore, the CLID that is sent would be 646 2130.

2 For a private ESN CDP call made from Key 1 (DN 2540) on the set, the CLID would be built as follows:

- LSC from CLID entry 0 (5) plus the DN of key 0 (2130).
- That is, the CLID that is sent would be 5 2130.

3 For a public local call made from Key 1 (DN 2540) on the set, the CLID would be built as follows:

- HLCL of CLID entry 0 (940) plus the DN of key 0 (2130).
- That is, the CLID that is sent would be 940 2130.

4 For a public national call made from Key 1 (DN 2540) on the set, the CLID would be built as follows:

- HNTN from CLID entry 0 (415) plus the HLCL from CLID entry 0 (940) plus the DN of key 0 (2130).
- That is, the CLID that is sent would be 415 940 2130.

Example 8 - Set with DN KEY prompt of “D” on key 1, International Numbering Plan

In this example, the calls are made on DN key 1, which has the KEY prompt set to “D” in LD 11. This means that a search is done on the set for a DN key, starting from key 0. The CLID of the found DN (key 0 in this case) key is used as the CLID of the active DN key, that is, the CLID for key 0 is used as the CLID for key 1.

Key 0 is configured against CLID table entry 0, and key 1 uses the CLID assigned to key 0.

Table 14
Set with DN KEY prompt of “D” on key 1.

CLID entry	HNTN (code for the home national number)	HLCL (code for the home local number), or LDN	DIDN (use the DN as the DID?)	HLOC (home location code)	LSC (local steering code)
Entry 0	2	6476	YES	578	6
Entry 1	2	64767676	NO	578	6
Entry 2			SRCH	578	6

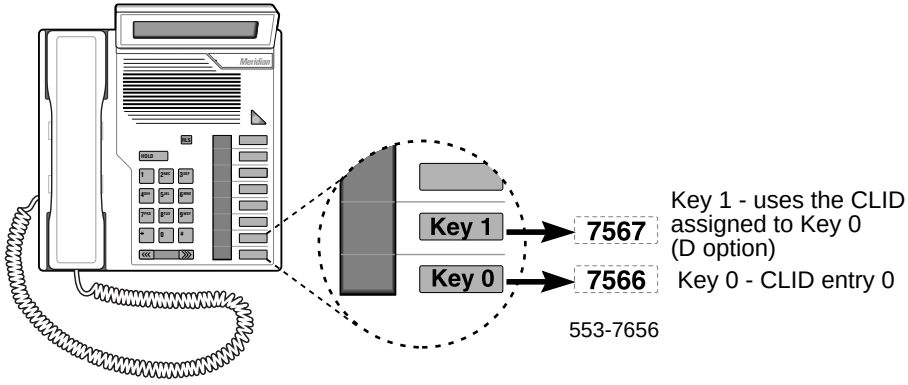

1 For a private ESN UDP call made from Key 1 (DN 7567) on the set, the CLID would be built as follows:

- HLOC from CLID entry 0 (578) plus the DN for key 0 (7566) - since the Key option has been set to ‘D’, a search is done from key 0 to find a DN key. The CLID for the found DN key is used as the CLID of active DN key - therefore, CLID for key 0 (the found DN) is used in the CLID for key 1. This also applies to cases 2, 3, and 4 which follow.
- Therefore, the CLID that is sent would be 578 7566.

2 For a private ESN CDP call made from Key 1 (DN 7567) on the set, the CLID would be built as follows:

- LSC from CLID entry 0 (6) plus the DN of key 0 (7566).
- That is, the CLID that is sent would be 5 2130.

3 For a public local call made from Key 1 (DN 7567) on the set, the CLID would be built as follows:

- HLCL of CLID entry 0 (6476) plus the DN of key 0 (7566).
- That is, the CLID that is sent would be 6476 7566.

4 For a public national call made from Key 1 (DN 7567) on the set, the CLID would be built as follows:

- HNTN from CLID entry 0 (2) plus the HLCL from CLID entry 0 (6476) plus the DN of key 0 (7566).
- That is, the CLID that is sent would be 2 6476 7566.

Example 9 - Set with DN KEY prompt of “D” on key 0

In this example, the calls are made on DN key 0, which has the KEY prompt set to “D” in LD 11. This means that a search is done on the set for a DN key, starting from key 0. The CLID of the found DN key (key 1 in this case) is then used as the CLID of the active DN key, that is, the CLID assigned to key 1 is used as the CLID for key 0.

Key 1 is configured against CLID table entry 0, and key 0 uses the CLID assigned to key 1.

Table 15
Set with DN KEY prompt of “D” on key 0.

CLID entry	HNTN (code for the home national number)	HLCL (code for the home local number), or LDN	DIDN (use the DN as the DID?)	HLOC (home location code)	LSC (local steering code)
Entry 0	415	940	YES	646	5
Entry 1	415	9699170	NO	646	5
Entry 2			SRCH	655	6

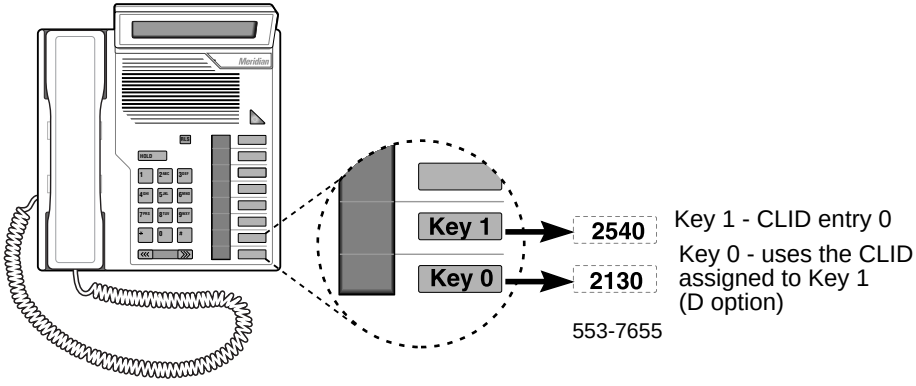

1 For a private ESN UDP call made from Key 0 (DN 2130) on the set, the CLID would be built as follows:

- HLOC from CLID entry 0 (646) plus the DN for key 1 (2540) - since the Key option has been set to ‘D’, a search is done from key 0 to find a DN key. The CLID for the found DN key is used as the CLID of active DN key - therefore, CLID for key 1 (the found DN) is used in the CLID for key 0. This also applies to cases 2, 3, and 4 which follow.
- Therefore, the CLID that is sent would be 646 2540.

2 For a private ESN CDP call made from Key 0 (DN 2130) on the set, the CLID would be built as follows:

- LSC from CLID entry 0 (5) plus the DN of key 1 (2540).
- That is, the CLID that is sent would be 5 2540.

3 For a public local call made from Key 0 (DN 2130) on the set, the CLID would be built as follows:

- HLCL of CLID entry 0 (940) plus the DN of key 1 (2540).
- That is, the CLID that is sent would be 940 2540.

4 For a public national call made from Key 0 (DN 2130) on the set, the CLID would be built as follows:

- HNTN from CLID entry 0 (415) plus the HLCL from CLID entry 0 (940) plus the DN of key 1 (2540).
- That is, the CLID that is sent would be 415 940 2540.

Operating parameters

In order for CLID to be properly delivered, a CLID entry must be defined in the CLID table for a customer. If a CLID entry or table is not defined, the active DN is sent as CLID.

The ISDN Calling Line Identification (CLID) Enhancements feature only pertains to calls that are made over ISDN routes.

The CLID that is sent from the Option11C Compact may be subject to any restrictions which may be imposed by the serving Telco.

This feature does not change the operation of CLID for attendant consoles. The codes for different call types are extracted from CLID entry 0 in LD 15, the customer data block. If the call type is private, the attendant DN is used. If the call type is public, LDN0 is used.

There is no system validation of digits entered in the CLID entry via a service change. Therefore, caution must be taken that any digits that are entered are valid and correct.

There is no cross-validation of the CLID entry associated with a set against the CLID entry entered in LD 15. If a CLID entry is deleted from the CLID table and the CLID entry remains assigned to a DN key, the active DN is sent as CLID.

The maximum number of digits for a CLID in an ISDN message is 16.

The restriction remains of constructing a seven-digit local number or a 10-digit national number, for the North American Numbering Plan. Also, a seven-digit maximum is maintained for an ESN Uniform Dialing Plan number, if the Flexible Numbering Plan package is not equipped. The seven and 10 digit restriction for a public number does not apply to International ISDN interfaces.

The CLID is constructed using the information in the CLID table associated with the active DN key for the calling party in the Setup message and the connected party in the Connected and Notify messages. This feature does not change the Information Elements pertaining to any other ISDN network DNs, such as for Redirecting and Original Called Number.

For ISDN supplementary services, the ISDN CLID enhancements do not change how a Network DN is constructed. For a Local Number, the Network DN is formed using the Home Central Office Code (HNXX)/Prefix 2 (PFX2). For ESN Numbers, the Network DN is formed using the Home Location Code (HLOC) for a Uniform Dialing Plan number or the Local Steering Code (LSC) for a Coordinated Dialing Plan number.

Feature interactions

Attendant Administration

Administration of a CLID entry, for a set from an attendant console, is not supported.

Automatic Call Distribution

The ACD DN is sent as the CLID for a call made by an ACD agent using a DN key on a key other than Key 0. With the feature enhancement, the CLID is constructed using the CLID entry associated with the active DN key. The ACD agent ID is not designed to be sent as the CLID.

If an ACD agent has an active call on Key 0 and if a call transfer or conference is initiated by the ACD agent, the CLID entry associated with the ACD DN Key 0 is used as the CLID (for remote calls only.)

There is no CLID entry for an analog (500/2500 type) ACD DN. The CLID associated with the analog (500/2500 type) DN is used when a call transfer or conference is initiated by an ACD agent on an analog (500/2500 type) set.

Call Detail Recording

The CLID in the CDR records, including the X records, contains the DN of the key from which the call is made, not the DN of Key 0.

Call Pickup Network Wide

The Private Integrated Services Network Exchange (PINX) DN in the customer data block is used for Call Pickup Network Wide. The network DN for the PINX DN is constructed using the existing Home Location Code (HLOC) or Local Steering Code (LSC) in LD 15. The DN of the originating party is constructed using the CLID associated with the active DN key. The DN of the originally called (ringing) party is constructed using the existing HLOC or LSC in LD 15.

For calls picked up from a secondary DN, the redirection DN in the Notify message is formatted with the CLID entry 0 of LD 15.

Calling Party Name Display

If a call transfer or conference is initiated on a multiple appearance DN programmed on a key other than Key 0, the Call Party Name Display associated with the DN of the active key is used, rather than the Call Party Name Display for Key 0.

Connected Number

When a call is modified, such as by a call transfer, this feature enhancement will try to use the CLID entry associated with the active DN key if available, otherwise the connected number will be constructed using CLID entry 0.

Network Call Redirection

Network Call Redirection constructs Redirecting Number and Redirection Number. The feature enhancement does not change the construction of the Redirecting Number. However, the Redirection Number of the Notify message is constructed using the CLID entry 0 of LD 15.

Network Message Services
Message Waiting Indication with DMS

When a user leaves a voice message, from a multiple appearance DN, on a key other than Key 0 (such as Key 1), the caller's recorded number will be the multiple appearance DN on Key 1, rather than the primary DN of Key 0. This means that when the user returns the call, he/she will ring the DN of Key 1 on all the sets that have the appearance of the DN.

When a user retrieves messages using a multiple appearance DN key other than Key 0, the user now retrieves the messages on the other DN key.

The mail box number for a Network Message Service user is based on the original called number, in the form of a Coordinated Dialing Plan (CDP) or Uniform Dialing Plan (UDP) number. The construction of the original called number is not changed. If a user's DN is using a different Home Location Code or Local Steering Code for CLID, the Meridian Mail database adds the user's CLID as the mail box number. For example, if the first called number for a user is 6462300, a UDP number, and the user's CLID is 6472300, using CLID entry 'x', the user's mail box numbers are 6462300 and 6472300.

In general, with the enhancement of sending the DN associated with an active key to make a call to Meridian Mail, the secondary key's DN is included in the Meridian Mail User's definition (for either a local or remote user.)

Network Ring Again

The Network Ring Again feature remains operational when a user uses a multiple appearance DN on a key other than Key 0 to activate Network Ring Again, since Network Ring Again saves the Terminal Number of the set that initiates Network Ring Again.

Remote Virtual Queuing

The Remote Virtual Queuing (RVQ) feature remains operational when a user uses a multiple appearance DN on a key other than Key 0 to activate RVQ.

Transaction Capabilities Application Part (TCAP)

The network DN for TCAP messages is constructed using the existing Home Location Code (HLOC), Local Steering Code (LSC) or Home Numbering Plan Area (HNPA)/Home Central Office Code (HNXX) prompts in LD 15. The feature enhancement does not change the construction of the TCAP messages.

Feature packaging

The ISDN Calling Line Identification (CLID) Enhancements feature does not introduce any new package. However, Integrated Services Digital Network (ISDN) package 145 is required as a dependency.

Feature implementation

The following steps are required to configure the ISDN CLID enhancements:

— In LD 15, construct the CLID table for a customer;

— In LD 21, print the CLID table (to verify CLID entries);

— In LD 10, define the CLID entry for analog (500/2500 type) sets;

— In LD 11, define the CLID entry for DN keys for Option11C Compact proprietary sets;

LD 15 — Construct the CLID entry for a customer.

Prompt	Response	Description
REQ:	NEW, CHG	Add new data, or change or delete existing data.
TYPE	NET	Networking data (if REQ = CHG only.)
CUST	0	Customer Number.
...		
ISDN	YES	Integrated Services Digital Network.
- PNI	1-327000	Private Network Identifier.
- CLID	YES (NO)	CLID option. YES = configure a CLID table for the customer. NO = (the default) do not configure a CLID table. In this case, the remaining prompts are not generated, and no CLID is sent for the customer.

- - SIZE	0-(256)-4000	The maximum number of CLID entries needed for a customer. If REQ = NEW, you may select the default value (256) by entering <CR> in response to this prompt. It is advised that you not define a size much larger than actually needed. This entry may be increased or decreased as required.
- - INTL	0-9999 X	Country code, for international number. Enter X to delete digits.
- - ENTRY	aaaa Xaaaa Xaaaa Xbbbb <CR>	aaaa = CLID entry to be configured. Xaaaa = CLID entry to be deleted. Xaaaa Xbbbb = CLID entries to be deleted. aaaa and bbbb must be a value between 0 and (SIZE-1). The ENTRY prompt is repeated until <CR> is entered as a response. If REQ = NEW, only one new entry may be created. The entry will be saved to system memory when the configuration for the entire overlay is completed. If REQ = CHG, as many entries as needed may be created, changed or deleted. The action for the entry will be saved to system memory after the CLID entry has been completely configured, that is, after the LSC prompt has been answered. If a new CLID entry is created, or an existing CLID entry is changed, the message “ENTRY aaaa SAVED” is displayed after the LSC prompt. If a CLID entry or CLID entries is/are deleted, the message “ENTRY aaaa DELETED” or “ENTRIES aaaa-bbbb DELETED” is displayed after the LSC prompt.
- - - HNTN	0-999999 X	National code for home national number (1-6 digits). X = delete digits.
- - - HLCL	0-999..9 X	Local code for home local number or Listed Directory Number (1-12 digits). X = delete digits.

- - - DIDN		How to use the DN as a DID when constructing a CLID national or local number.
	(YES) NO SRCH	YES = The default. The CLID is constructed using the digits defined in HLCL followed by the DN of the active key. NO = Construct the CLID using the digits defined in HLCL. SRCH = Search on the set, from key 0 - upwards, to find a CLID entry which has the DIDN set to YES. Use the found CLID to construct the local number.
- - - HLOC	0-9999999 X	Home location code (ESN), 1-7 digits. X = delete digits.
- - - LSC	0-9999999 X	Local steering code, 1-7 digits. X = delete digits.
ENTRY aaaa SAVED ENTRY aaaa DELETED ENTRIES aaaa-bbbb DELETED		Displayed message. Refer to Note 3 for the ENTRY prompt.

It is advised that after the CLID table has been built in LD 15, a printout be generated, using LD 21, to verify the table entries defined in LD 15.

LD 21 — Print the CLID table for a customer.

Prompt	Response	Description
REQ	PRT	Print the customer data block.
TYPE	CLID	CLID entry data.
CUST	0	Customer Number.
SIZE	0-4000	The value that was defined for SIZE in LD 15 is printed automatically after the customer number has been entered.
RNGE	aaaa aaaa bbbb <CR>	CLID entry to be printed. Range of CLID entries to be printed (from aaaaa to bbbbb), aaaa and bbbb must be between 0 and the value defined for SIZE-1 in LD 15. Printing begins when <CR> is entered.
INTL	0-9999	Country code, for international number, is printed.
ENTRY	aaaa	CLID entry number in CLID table is printed. If a range of entries is entered in the RNGE prompt, all of the entries in the specified range are printed in sequence.

- HNTN	0-999999	National code for home national number, 1-6 digits, is printed.
- HLCL	0-999..9	Local code for home local number or Listed Directory Number, 1-12 digits, is printed.
- DIDN	YES NO SRCH	The desired choice of how to use the DN as a DID, when constructing a CLID national or local number, will be printed.
- HLOC	0-9999999	Home location code (ESN), 1-7 digits, is printed
- LSC	0-9999999	Local steering code, 1-7 digits, is printed.
...		

LD 10 — Define the CLID entry for analog (500/2500 type) sets.

Prompt	Response	Description
REQ	NEW, CHG	Add new data, or change existing data.
TYPE	500	500 set.
TN	c u	Terminal Number address card and unit.
...		
DIG	xx yy	Dial Intercom group number and member number.
DN	xxxx (0)-N	DN and CLID entry. N = CLID SIZE-1 (SIZE defined in LD 15).
...		

LD 11 — Define the CLID entry for DN keys for Option11C Compact proprietary sets.

Note: When assigning a CLID entry to an ACD set, you cannot use the same position ID already on the set. The set must be first outted, or the ACD key must be nulled and then rebuilt with the table entry number.

Prompt	Response	Description
REQ	NEW, CHG	Add new data, or change existing data.
TYPE	xxxx	Type of telephone set.
TN	c u	Terminal Number address card and unit.
...		
KEY		Telephone function key assignments.
	xx MCN yyyy (0)-N/D xx MCR yyyy (0)-N/D xx PVN yyyy (0)-N/D xx PVR yyyy (0)-N/D xx SCN yyyy (0)-N/D xx SCR yyyy (0)-N/D	xx = key number. MCN = Multiple Call Non-ringing key. MCR = Multiple Call Ringing key. PVN = Private Line Non-Ringing key PVR = Private Line Ringing key SCN = Single Call Non-ringing key. SCR = Single Call Ringing key. yyyy = DN. (0)-N = CLID entry, with N = CLID SIZE-1 (SIZE defined in LD 15). D = CLID entry. Search for a CLID entry from key 0 upwards, to find a DN key. The found CLID is used as the CLID entry for the active DN key.

KEY	xx HOT D dd yyy...y zzzz m (0)-N/D	Two-way Hotline Direct key, where: xx = key number. dd = number of digits dialed. yyy...y = target number (terminating DN, maximum of 31 digits). zzzz = two-way hotline DN. m = one of the following Terminating Modes: H = Hotline (default) N = Non-ringing R = Ringing V = Voice (0)-N = CLID entry, with N = CLID SIZE-1 (SIZE defined in LD 15). D = CLID entry. Search for a CLID entry from key 0 upwards, to find a DN key. The found CLID is used as the CLID entry for the active DN key.
KEY	xx HOT L bbb zzzz (0)-N/D	Two-way Hotline List key, where: xx = key number. bbb = Hot Line List entry (0-999). zzzz = two-way hotline DN. (0)-N = CLID entry, with N = CLID SIZE-1 (SIZE defined in LD 15). D = CLID entry. Search for a CLID entry from key 0 upwards, to find a DN key. The found CLID is used as the CLID entry for the active DN key.
KEY	xx ACD aaaa 0-N/D bbbb	ACD key, where: xx = key number. aaaa = ACD DN or Message Center DN. 0-N = CLID entry, with N = CLID SIZE-1 (SIZE defined in LD 15). D = CLID entry. Search for a CLID entry from key 0 upwards, to find a DN key. The found CLID is used as the CLID entry for the active DN key. bbbb = ACD agent's position ID. **Please refer to the note at the top of the overlay table, on page 124, that pertains to assigning a CLID entry to an ACD set.**

Feature operation

No specific operating procedures are required to use this feature.

Integrated Trunk Access (ITA)

Integrated Trunk Access is a Option11C Compact capability allowing a T-1 facility to include both ISDN out-of-band signaling trunks as well as 'A' and 'B' bit signaling trunks. This capability has applications with ISDN private line service, multiplexers and digital cross-connects.

Package Requirements

This feature requires the following packages:

ISDN	package 145
DTI	package 75
PRI	package 146

ISDN Networking: Advanced Network Services

This package allows for the activation of Network Ring Again, Network Call Redirection and Trunk Optimization.

Package Requirements — NTWK with NARS and PRI

Package requirements are as follows:

NARS	package 58
PBXI	package 75
ISDN	package 145
PRI	package 117

Package Requirements — NTWK with NARS and ISL

Package requirements are as follows:

NARS	package 58
ISDN	package 145

Package Requirements — NTWK with CDP and PRI

Package requirements are as follows:

CDP	package 59
PBXI	package 75
ISDN	package 145
PRI	package 117

Package Requirements — NTWK with NARS and ISL

Package requirements are as follows:

CDP	package 59
ISDN	package 145

Package Requirements — NARS and CDP

All PRI applications require Digital Trunk Interface PBXI option 75. ISL applications do not require option 75 unless used in conjunction with DTI.

NSIG (option 37) is required for TCOS and ESN Signaling.

ISDN Signaling Package

This package is the base platform required by all other ISDN packages. It provides the CCITT Q.931 layer 3 signaling, for support of ESN/ISDN features.

Option11C Compact PRI to DMS-100

Connection to a Central Office equipped with a DMS-100 can be accomplished using dedicated channels, similar to Digital Trunking-DTI, but with Calling Line Identification (CLID), speed of call setup and out-of-band signaling.

Availability

The availability of the above option depends on local service offerings.

Software implementation and feature activation coordination between the Central Office and Option11C Compact personnel is very critical and must be achieved during initial installation and on an ongoing basis.

Considerations

Configuration of this link requires consideration of software constraints in its initial implementation. Some of these considerations are listed below:

— Only one incoming WATS route at any time can be configured on this link. Work-arounds are possible using TIE routes and must be arranged with the central office. This constraint applies to methods 2 and 3 above.

— Only one incoming COT or incoming DID route can be configured. The link can only support DID or DOD but not both. Again, work-arounds are possible using TIE route and must be arranged with the central office. This constraint applies to methods 2 and 3 above.

A Option11C Compact PRI to a DMS-100 interconnection requires a Uniform (UDP) or Coordinated (CDP) Dialing Plan plus ISDN if you are in a private network environment.

Package Requirements

This feature requires the following options:

ISDN	package 145
PRI	package 146
NARS	package 58
NTWK	package 148 (for Centrex connectivity)

Meridian Mail Trunk Access Restriction

The Meridian Mail Trunk Access Restriction (MTAR) feature prevents direct or indirect call transfer or conference of external calls to Meridian Mail. In this feature, external calls are defined as incoming/outgoing trunk calls that originate or terminate outside a private network.

This definition is applicable to all types of trunks, with the exception of TIE trunk calls. External calls are separated from a transferring/conferencing set on a network using TIE trunks. MTAR operation is dependant on the information sent to the remote node from the node that is attempting to transfer/conference. MTAR is triggered if the network information (such as Network Attendant Service or Calling Line Identification) indicates that an external call and a transfer/conference attempt to Meridian Mail is occurring. MTAR is also triggered if local information, such as Route Class, indicates an external call and a transfer/conference attempt to Meridian Mail is occurring.

Meridian Mail Trunk Access Restriction averts potential Meridian Mail system abuse by distinguishing between internal and external calls that are directed to Meridian Mail. When activated, Meridian Mail Trunk Access Restriction impacts the operation of the following features:

— Call Transfer

— Conference,

— No Hold Conference, and

— Call Join capabilities of the Multi-Party Operation feature.

Meridian Mail Trunk Access Restriction prevents the completion of any Call Transfer, Conference, No Hold Conference or Call Join attempts on incoming/outgoing external calls to Meridian Mail.

As illustrated in Figure 5, Maters capabilities prevent an established call between Set A, an internal call, and Set B, an external call, from being forwarded to Meridian Mail. When Set A attempts to either Transfer, Conference, No Hold Conference or Call Join Set B to Set C, which is either a direct Meridian Mail DN or has activated Call Forward All Calls (CFAC) to Meridian Mail, the transfer and conference keys are ignored when pressed to complete operation.

Figure 5
Meridian Mail Trunk Access Restriction Call Transfer

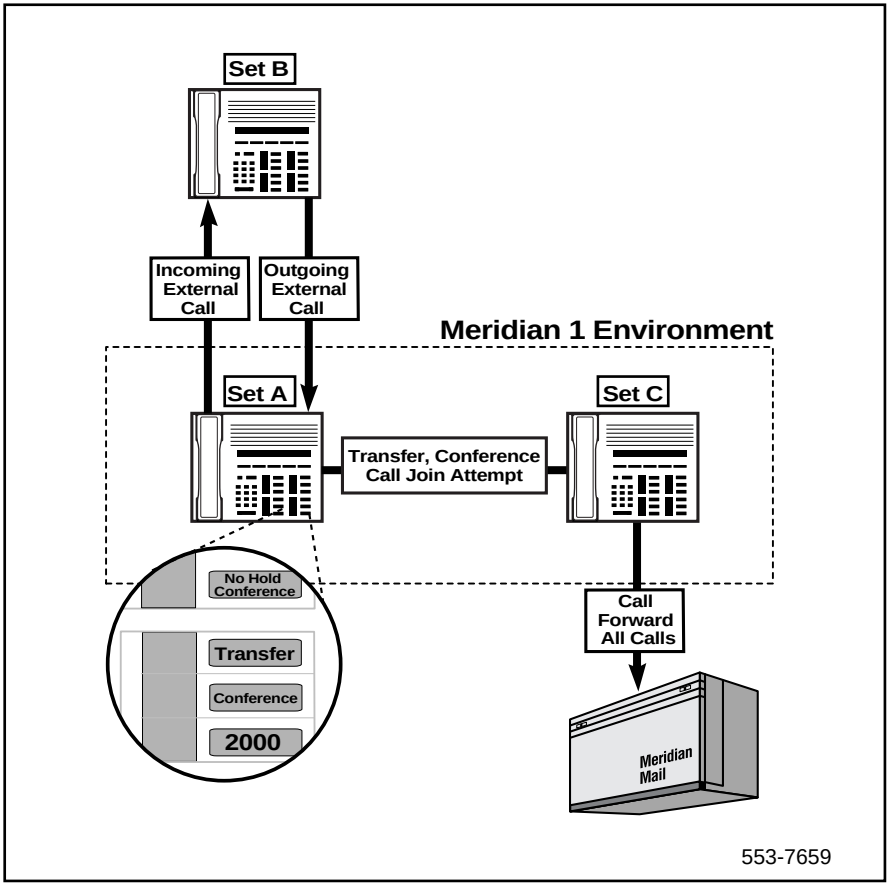

Operating parameters

MTAR does not treat Centralized Attendant Position and Night Attendant sets as Attendant Consoles. These sets receive treatment based on their actual set type. For example, if the night attendant is a Option11C Compact proprietary set, then it is treated as Option11C Compact proprietary set.

The operation of an Attendant Console is not affected when this feature is enabled. An attendant can transfer or conference an external line to Meridian Mail directly or indirectly.

MTAR does not affect Automatic Attendant, Customer Controller Routing, Integrated Voice Response or Meridian Link features. However, if a user disallows any of these features from accessing Meridian Mail, the application must be written to take this into account.

In a networking environment, Meridian Mail must reside on the same node as the transferring/conferencing set.

Feature interactions

Traffic Reporting

Traffic Reporting and Meridian Administration Tool's (MAT) traffic report, TFC005, are modified to report the number of times this feature is requested. A new line is added for the Meridian Mail Trunk Access Restriction which is identified by the feature number "27" and its peg count.

Network Call Transfer
Network Call Conference

Meridian Mail Trunk Access Restriction (MTAR) requires the transferring or conferencing set and Meridian Mail to be located on the same node. If the transferring or conferencing set are located not on the same node as Meridian Mail, the MTAR feature is not provoked because the call transfer/ conference attempt is terminated by a network on Meridian Mail.

However, an external call can be transferred or conferenced over the network, using TIE trunks. This operation is dependant on the type of network information the remote node forwards to the node where the transfer/conference attempt is made. Meridian Mail must be on the transferring/conferencing node. If network information is provided, indicating that an external call is attempting to transfer/ conference to Meridian Mail, the MTAR feature is invoked. When no network information is provided, MTAR is provoked if the local information (Route Class) indicates that an external call to Meridian Mail is being attempted.

Feature packaging

Meridian Mail Trunk Access Restriction requires Message Waiting Center (MWC) package 46.

Feature implementation

Meridian Mail Trunk Access Restriction feature requires prior installation of Meridian Mail. The implementation of this feature, therefore, assumes that Meridian Mail has been properly configured.

LD 15 – Enable Meridian Mail Trunk Access Restriction.

Prompt	Response	Description
REQ:	CHG	Change.
TYPE:	FTR	Customer Features and Options.
CUST	0	Customer number.
- OPT	MCI	Message Centre Included.
...		
- MTAR	YES	Meridian Mail Trunk Access restricted. NO = Meridian Mail Trunk Access allowed.

Feature operation

Call Transfer/Conference

Option11C Compact Proprietary Set

Set A is a Option11C Compact proprietary set with Transfer Key and Conference Key.

1 An incoming/outgoing external call is established between Set A and Set B, an external party. The call between Set A and Set B is active on Key X.

2 Set A presses the Transfer/Conference Key that automatically puts Set B on Hold.

3 Set A dials Set C. Set C has either Call Forward All Calls to Meridian Mail or is a Meridian Mail DN.

4 When Set A attempts to transfer/conference Set B by pressing more than once the Transfer/Conference Key it is ignored.

5 Set A recovers Set B by pressing Key X.

No Hold Conference

Option11C Compact Proprietary Set

When Meridian Mail Trunk Access Restriction is enabled, direct or indirect no hold conference to an external call is permitted. During direct or indirect no hold conference, the calling party is never put on hold.

Set A is a Option11C Compact proprietary set with a No Hold Conference Key configured as either No Hold Conference, Conference Autodial, Conference Speed or Conference Hotline.

1 An incoming/outgoing external call is established between Set A and Set B, an external party. The call between Set A and Set B is active on Key X.

2 Set A presses the No Hold Conference Key.

3 Set A dials Set C. Set C is has either Call Forward All Calls to Meridian Mail enabled or is a Meridian Mail DN.

4 The conference is set up as normal. However a two party connection between Set B, an external party, and Meridian Mail is not allowed if the call controller releases. If this occurs, the connection between the trunk and Meridian Mail party is dropped.

Transfer
Analog (500/2500 type) Set

Set A is an Analog (500/2500 type) set with a XFA Class of Service (transfer and three/six party conference allowed).

1 An incoming or outgoing external call is established between Set A and Set B, an external party.

2 Set A performs a switchhook flash that puts Set B on hold.

3 Set A dials Set C. Set C has either Call Forward All Calls to Meridian Mail enabled or is a Meridian Mail DN.

4 Before or after the Meridian Mail has answered, Set A attempts to transfer Set B to Meridian Mail by going on-hook.

5 This attempt is treated as an illegal transfer. Set A is re-rung and reconnected with Set B when going off-hook.

Conference
Analog (500/2500 type) Set

Set A is an Analog (500/2500 type) set with a XFA Class of Service (transfer and three/six party conference allowed).

1 An incoming or outgoing external call is established between Set A and Set B, an external party.

2 Set A performs a switch hook flash that puts Set B on hold.

3 Set A dials Set C. Set C has either Call Forward All Calls to Meridian Mail enabled or is a Meridian Mail DN.

4 Before or after the Meridian Mail has answered, Set A attempts to conference Set B to Meridian Mail by performing another switchhook flash.

5 The conference is not permitted. Set A is reconnected to Set B. The call to Meridian Mail is disconnected.

Set A is an Analog (500/2500 type) set with a TSA Class of Service (three party service allowed).

1 An incoming or outgoing external call is established between Set A and Set B, an external party.

2 Set A perform a switch hook flash that puts Set B on hold.

3 Set A dials Set C. Set C has either Call Forward All Calls to Meridian Mail enabled or is a Meridian Mail DN.

4 Before or after Meridian Mail has answered, Set A attempts to conference Set B to Meridian Mail by dialing the conference control digits.

5 The conference is not permitted and Set A is reconnected to Set B. The call to Meridian Mail is disconnected.

Table 16 summarizes how different external calls are handled when Meridian Mail Trunk Access Restriction is enabled.

Table 16
Summary of Meridian Mail Trunk Access Restrictions

Telephone	External Call Type	Operation	Failure Treatment	Result
500/2500	Incoming	Transfer to Meridian Mail (MMail)	Re-ring to transferring set	Not allowed
500/2500	Incoming	Transfer to set with Call Forward All Calls (CFAC) to MMail	Re-ring to transferring set	Not allowed
500/2500	Outgoing	Transfer to MMail	Disconnect external call and Meridian Mail	Not allowed
500/2500	Outgoing	Conference to set with CFAC to MMail	Disconnect external call and Meridian Mail	Not allowed
500/2500	Outgoing/ Incoming	Conference to MMail	Reconnect to external call. Disconnect call to MMail	Not allowed
500/2500	Outgoing/ Incoming	Conference to set with CFAC to MMail	Reconnect to external call. Disconnect call to MMail	Not allowed

Option11C Compact Proprietary	Outgoing/ Incoming	Transfer/Conference to MMail	Operation ignored	Not allowed
Option11C Compact Proprietary	Outgoing/ Incoming	Transfer/Conference to set with CFAC to MMail	Operation ignored	Not allowed
Option11C Compact Proprietary	Outgoing/ Incoming	No Hold Conference to Meridian Mail or to set CFAC to MMail	Not applicable	Allow
Option11C Compact Proprietary	Outgoing/ Incoming	No Hold Conference release to make MMail to trunk two-party connection	Disconnect MMail and external trunk	Not allowed
Option11C Compact Proprietary	Outgoing/ Incoming	Call Join of external call to MMail	Operation ignored	Not allowed
Attendant	Outgoing/ Incoming	Transfer/Conference to Meridian Mail	Not Applicable	Allowed
Attendant	Outgoing/ Incoming	Transfer/Conference to set with Call Forward All Calls to Meridian Mail	Not Applicable	Allowed

Network Alternate Route Selection

This package allows for efficient alternate routing of calls across the network and provides a uniform dialing plan in an ISDN environment.

Refer to the NARS section in this book for more complete information.

Package Requirements

Package requirements are as follows:

BRTE	package 14
BQUE	package 28
NCOS	package 32
FCBQ	package 117

Network Call Party Name Display (NCPND) and Network Name Delivery (NND)

Network Call Party Name Display (NCPND) offers a network-wide visual display of the Calling Party and Called Party Names on telephone sets with Alpha-Numeric Displays.

Across the ISDN DTI/PRI network, the NCPND feature displays the following:

— the calling party's name on the terminating set

— the called party's name on the originating set

With this feature, each Option11C Compact in the network can contain the name and number of each user on that particular system. In the call set-up message, the originating system will send the CLID and calling party name to the terminating system. When the call is answered, the terminating system will send back the connected number and name.

For call redirections, the Dialed Name Display option may be selected via a service change which would provide a display of the redirecting name instead of the calling name for the set which is answering the redirected call. The originating set’s display is not affected by the use of this option.

Network Name Display Interworking allows caller and calling party name display in Option11C Compact connections to DMS-100, DMS-250 and other Option11C Compact systems.

The following sets support the NCPND feature:

— M2250 Attendant Console

— Meridian Modular Telephones

- M2006 with Display
- M2008 with Display
- M2216 with Display
- M2616 with Display

Please consult the telephone User Guides to determine the exact display for each particular set.

Network Name Delivery (NND) is the method used to send the names and numbers across the network. There are two NND methods available: ND1 and ND2.

Operating parameters

Network Name Delivery method 1 (ND1) operating parameters:

— Option11C Compact to Option11C Compact connections only are supported.

— ND1 supports the name display for call redirection by Call Forward No Answer, Hunt and Call Pickup if the redirection is done across the network. See “Network Call Redirection” in this chapter for configuration.

— If the called party is at a remote switch, the called party name is displayed on the caller's display only after the call is answered unless there was a redirection.

— A CPND enhancement allows the display of the redirecting name on the terminating telephone instead of the calling name by a service change option only if the first redirecting party is on the terminating switch.

— The maximum number of characters in a displayed name is 24.

Network Name Delivery method 2 (ND2) operating parameters:

— ND2 supports direct PRI connections to Option11C Compact, SL-100, and DMS (with BSC32 and later software).

— For Option11C Compact to Option11C Compact connections, the maximum number of characters in a displayed name is 24. When connecting to a Central Office, 15 characters only are supported. Names exceeding this length are truncated.

— ND2 supports name delivery for Call Pickup, Call Transfer, Hunt and Call Forward All Calls/No Answer/Busy.

— A CPND enhancement allows the display of the redirecting name on the terminating telephone instead of the calling name by a service change option only if the first redirecting party is on the terminating switch.

— In all cases when the name is available, the called party name is displayed on the caller's display during the ringing phase. This is an enhancement over ND1 which displays names on connect.

— ND2 enhancements are not supported on connections to Option11C Compact using ND1.

Package Requirements

Network Call Party Name Display requires the following:

ISDN	option 145
PRI	option 146 or ISL option 147
CPND	option 95 and DDSP option 19

Network Call Redirection (NCRD)

Network Call Redirection allows calls to be redirected across the ISDN network as a result of Hunting, Call Forward All Calls and Call Forward No Answer.

Impact on CLID and CPND For both CLID and CPND, updated information is provided to both the calling and the called set's display when the call is redirected. With this enhancement, the display of the calling party shows the connected number when the call redirected to another number in the ISDN network.

If Network Calling Party Name Display (NCPND) is optioned, the calling party's set also displays the connected party's name. If a call is forwarded more than once, the calling party's set displays only the first re-directed number and name and the connected number and name.

Redirection reason

With Network Call Redirection, the terminating set displays the CLID from across the DTI/PRI network as well as the forwarded set's number. If NCPND is optioned, the calling party's name and number as well as the originally called party number is displayed at the terminating set. In addition, the sets of the calling and terminating parties will display the redirection reason (CFWD, CFNA, HUNT, PKUP, XFER).

Network Call Redirection also allows the customer to either block calls from being redirected over the network, or limit the number of redirections from 1 to 5 times per call.

Network Call Transfer and Attendant Extended Calls

Network Call Transfer and Attendant Extended Calls display the calling party name and number to the “Transferred to”/”extended to” party across the network. Also, if NCPND is optioned, the calling party's display is updated to show the connected party's name and number.

> ***Note:*** Network Call Transfer over PRI does not provide the ESN Network Transfer feature. This feature eliminates tandem trunk connections that double back over the same route. PRI Network Transfer merely allows calls to be blindly transferred across the ISDN network.

Network Hunt

The Network Hunt feature extends the current capabilities of Hunt to a Option11C Compact network using ISDN Primary Rate Interface (PRI). Also, the displays of originating and terminating sets of a redirected call are updated to correctly present information and the reason for redirection (Hunt).

Network Intercom (Hot Type D Enhancement)

Hot Line enables a designated telephone to place calls to a predetermined destination that may be internal or external to Option11C Compact. The call does not require attendant intervention. When the handset is lifted, or when a preprogrammed key is activated, the system speed calls a preprogrammed DN. Hot Lines access a set of Terminal Numbers programmed by direct entry using LD 11, or by list entry such as System Speed Call (SCC) using LD 18. Once a Hot Line call enters the ringing state, it is the same as a normal call.

Hot Type D provides the ability for Meridian Digital Telephones to have two-way calls on specially designated keys (not on the DN keys) with other Meridian Digital Telephone sets connected to Option11C Compact PBXs across a Meridian Customer Defined Network (MCDN) Integrated Services Digital Network (ISDN). A Hot Type D call can now terminate in three different modes: Voice, Ringing, and Non-ringing. With the Voice mode, speech path is automatically connected after a short ring. With Ringing and Non-ringing modes, the call must be manually answered by the called party; the difference between the two modes is that for Non-ringing no audible tone is given (the Hot Line key flashes to indicate the call).

Hot Type D allows more than one set having the same target DN defined for the Hot Type D key. This enhancement includes Voice, Ringing, and Non-ringing termination modes, and the capability to leave a No Answer Indication in some situations (i.e., the Hot Line key winks). A call terminating on an enhanced Hot Type D key operates the same as if terminating on a Hot Type I key, if the originating DN is the same as the target DN defined for the key. If it is not the same, but another Hot Line key exists on the set that has a target DN that matches the originating DN, a No Answer Indication is left on that key.

Operating parameters

A Hot Line key should not be defined on a station without a Prime DN and likewise should not be defined on the primary key. If this is not done, the improved functionality will not work and the call is treated as a non-Hot Line call.

Hot Line keys must be defined with the same dialing plan.

Feature interactions

Attendant Blocking of DN

Pressing a Hot Type D key that is attendant blocked establishes the call on the source side of the attendant.

Automatic Call Distribution (ACD)

Hot Line calls involving ACD sets must use the Hot Type D option.

Last Number Redial

A Hot Line key cannot be redialed using the Last Number Redial feature.

Multiple Appearance Redirection Prime (MARP)

Hot Type D calls can have voice termination only on a Multiple Appearance Redirection Prime (MARP) Terminal Number (TN), or if there is no MARP TN, then on the first TN in the TN list. A No Answer Indication for Hot Type D can only be left on the MARP TN, or if there is no MARP TN, then on the first TN in the TN list.

Ring Again

Hot Line calls terminating on a busy key become normal calls. Hence, they may use the Ring Again feature under normal circumstances.

Vacant Number Routing

Enhanced Hot Type D keys support vacant number routing.

Feature packaging

The Network Intercom (Hot Type D Enhancement) feature is included in Enhanced Hot Line (HOT) package 70.

Feature implementation

LD 11 – Define Hot Type D keys and Classes of Service as follows:

Prompt	Response	Description
REQ	NEW, CHG, OUT	Configure, change or remove.
TYPE	aaaa	Telephone type where aaaa cannot = M3000.
TN	c u	Terminal Number card and unit.
...		
CLS	NAIA (NAID)	No Answer indication allowed. No Answer indication denied.
...		
KEY	nn HOT D dd target_num hot_dn R/V/N/(H)	Two-way Hot Line Key. dd = number of digits dialed. target_number = terminating DN (31 digits maximum). Hot_dn = two-way Hot Line DN. Termination mode: R = Ringing V = Voice N = Non-ringing, and H = Hot Line (the default).
KEY	nn HOT I dd target_number (V)/N/R	Hot Line key. dd = number of digits dialed. target_number = terminating DN (31 digits maximum). Termination mode: V = Voice (the default) N = Non-ringing, and R = Ringing.

LD 95 – Configure the Calling Party Name Display:

Prompt	Response	Description
REQ	NEW, CHG	Add or change data.
TYPE	CPND	Calling Party Name Display.
CUST	0	Customer Number.
...		
NITC	aaaa (NI)	Non-Hot Line call. Indicates that the Hot Line call terminated as a normal call.

Feature operation

Press the Hot Type D key to initiate an Hot Line call to a target DN (the DN may be an external DN in an MCDN ISDN network).

The called party answers the call by pressing the Hot Type D key if configured. If the called party has no Hot Type D key configured, the call will behave as a normal call and is answered accordingly.

If the called party does not answer, and has No Answer Indication Allowed Class of Service, the Hot Type D key will be winking as a form of No Answer Indication.

Non-Associated Signaling Channels (nB+D)

On a Option11C Compact system, the D-Channel can support up to 8 PRIs in an nB+D environment with a minimum of 23 and a maximum of 190 B-channels. The 190 B-channel restriction is derived from the calculation of 8 PRIs x 24 B-channels minus 2 D-Channels.

An nB+D arrangement allows a PRI facility to consist of 24 B-channels, while the D-Channel is carried by, and shared with, another PRI link.

Package Requirements

Package requirements are as follows:

ISDN	package 145
PRI	package 146

Primary Rate Access Package

This package allows for the configuration of PRI in a 23B+D or nB+D shared mode arrangement. It also allows for the transport of CLID and ESN/ISDN features.

Package Requirements

Package requirements are as follows:

PBXI	package 75
ISDN	package 145

T309 Timer

The T309 timer provides a 90-second wait interval after a D-channel failure before the B-channels are cleared. When the D-channel is re-established before T309 expires, a STATUS ENQuiry message is sent by the network side. The user side responds with a STATUS message to report the status of the queried channel. If the call state matches, the call is preserved; otherwise, a RELease message is sent to the user side, clearing the call. If the user side does not respond with the STATUS message before the T322 timer expires, the call is cleared.

If T309 expires before the D-channel is re-established, indicating that there is a serious problem with the link, Option11C Compact clears all calls internally and sends a global RESTART when the D-channel is re-established.

For a Option11C Compact to Option11C Compact interface, the T309 timer is not used. The Option11C Compact keeps active calls established as long as possible and lets B-channel users decide when a call is to be dropped. The Option11C Compact specified as network side sends the STATUS ENQuiry message on all active calls when the D-channel is re-established.

The compatibility checking by means of the STATUS ENQuiry message might leave some channels with mismatched states, which are cleared only when trying to reuse the channel.

T309 is dependent on both network and user sides. If a side does not have a Timer T309, it sends a global RESTART when D-channel is re-established.

AT&T 4ESS and 5ESS do not clear transient calls when the D-channel fails. If T309 expires, the calls are not cleared until the D-channel is re-established or the call is cleared by the far end.

Feature packaging

The T309 and STATUS ENQuiry message are included in basic ISDN PRI/ISL functionality. No additional packages are required.

The T309 timer is preset at 90 seconds and cannot be service changed.

Trunk Anti-Tromboning

The purpose of the Trunk Anti-Tromboning (TAT) feature is to optimize tromboned ISDN PRI trunks, or analog trunks within an ISDN PRI network. Anti-tromboning will be performed only after the third party answers, and provided that the tromboned PRI or analog trunks are associated with the same primary D-channel (with or without a backup D-channel) and the trunks are associated with the same customer. Anti-tromboning will not be performed if the tromboning trunks belong to different customers on the same node (even though they are associated with the same primary D-channel.)

> ***Note:*** **TAT also applies to a call entering a Option11C Compact network over a Central Office trunk. TAT eliminates the tromboning of private network trunks that may occur if the call is redirected or modified.**

The term tromboning is used to define a situation whereby two PRI trunks, associated with the same D-channel, are being used in parallel. Basically, one PRI or analog trunk (B-channel) is established to handle an incoming call from a calling set at the originating node to a called set at the terminating node. A second PRI trunk or analog (B-channel) is then established to handle the loop-back of the same call that is redirected from the called station back to a different set at the originating node.

The loop back may result from a call being treated by Network Message Services - Meridian Mail, Network Call Redirection (such as Network Call Forward All Calls, Network Call Forward No Answer, Network Call Forward Busy, and Network Hunting), or by Call Modification (such as a call transfer.) These tromboned trunks are redundant. The Trunk Anti-Tromboning (TAT) feature eliminates these redundant trunks after the call is answered. Refer to "Example of an anti-tromboning operation" on page 148 for a basic example of how TAT is applied.

TAT may function with a Option11C Compact interworking with another Option11C Compact, or Option11C Compact interworking with a DMS-250. In the first case, each
Option11C Compact must be equipped with TAT. In the latter case, the DMS-250 must be a Sprint load equipped with the MCDN Release Link Trunk (RLT) feature. In the case of a Option11C Compact to DMS interworking, the trunks may be PRI or VNS.

TAT and Trunk Optimization Before Answer (TRO-BA) may be configured on the same system. In this case, TRO-BA would attempt to optimize the trunks before a call is connected, and TAT would then attempt to optimize the trunks after the call is connected. Please refer to the "Trunk Anti-Tromboning and Trunk Optimization - Before Answer both equipped on the same Option11C Compact" on page 160 for more information and examples.

Example of an anti-tromboning operation

The following example may be used as a basic demonstration of TAT at work within a simple Option11C Compact to Option11C Compact interworking (other interworking scenarios are described in the section Anti-tromboning scenarios beginning on page 151.

In Figure 6, the following situation exists:

- Station B at the terminating node receives an incoming call over a PRI trunk from Station A at the originating node; or, an incoming CO call is tandemed from the originating node to the terminating node;
- Station B answers the call, and activates Call Transfer to Station C residing at the originating node. A second PRI trunk is established to handle the new call;
- Station B completes the call transfer, leaving Station A connected to Station C (which is in ringing state) using the two PRI trunks. The PRI trunks remain tromboned until Station C answers the call.

Figure 6
Before Trunk Anti-Tromboning operation

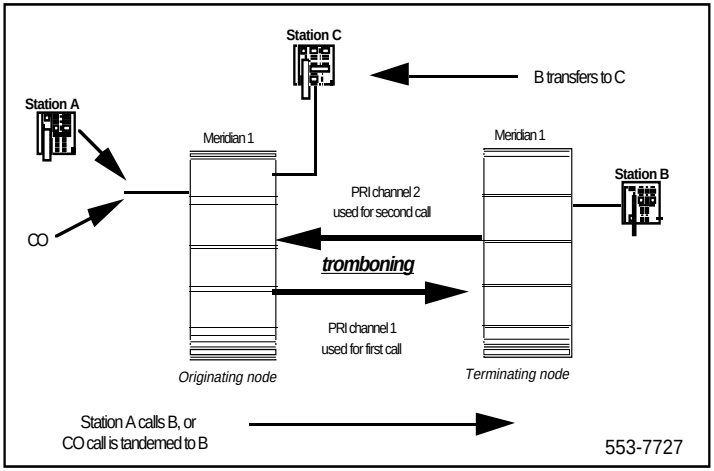

Figure 7 illustrates how the application of TAT eliminates the redundant ISDN PRI B-channels forming the loop-back. After Station C answers the call, Station A and Station C are bridged at the originating node and the redundant trunks are released, provided the trunks involved are associated with the same primary D-channel, and the same customer. This operation eliminates the use of extra network trunking facilities for the duration of the call.

Figure 7
After Trunk Anti-Tromboning operation

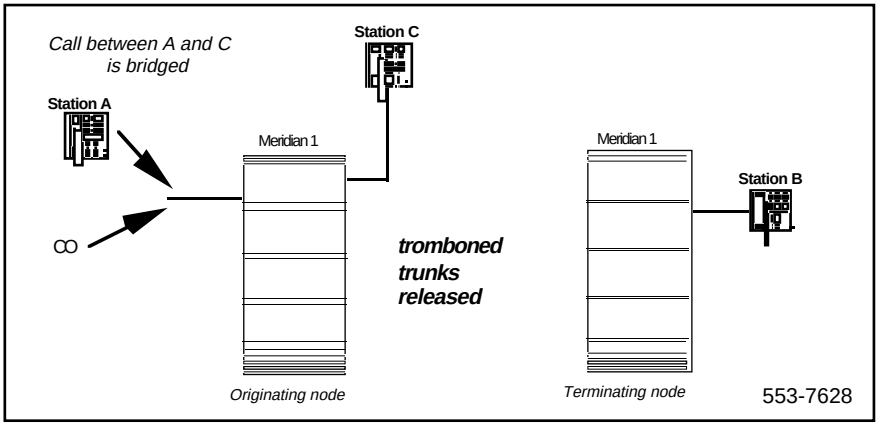

Note: If the TAT feature is not supported by either the originating or terminating node, or if the originating node is unable to bridge the call between Station A and Station C, then Station A and Station C remain connected via the tromboned trunks, for the duration of the call. Also, TAT would not release the tromboning trunks if Station A and Station C are both attendants.

Anti-tromboning scenarios

This section provides examples of various anti-tromboning scenarios, as applied with the Option11C Compact interworking with another Option11C Compact, and a Option11C Compact interworking with a DMS-250 Sprint load equipped with RLT.

Please note that the following legend is used when showing connectivity in the illustrations.

Legend

PRI B-channel

M1 = Option11C Compact equipped with TAT

DMS = DMS-250 Sprint load equipped with RLT

Note: In the examples that follow, the Trunk Optimization Before Answer (TRO-BA) feature is not equipped.

Anti-tromboning operation for Network Call Redirection (case 1), Option11C Compact interworking with DMS

In Figure 8, the following case is represented for TAT as applied to a Network Call Redirection scenario (in the example, a case of a call forward is used), with two Option11C Compact switches interworking with a DMS-250.

- Station A located at an originating switch (Public Central Office or PBX) DMS node, makes an internodal call through a DMS-250 and a tandem Option11C Compact node to Station B located at a terminating Option11C Compact node (first call);
- Station B, located at the terminating Option11C Compact node, is call forwarded through the tandem Option11C Compact node and the DMS-250, to Station C located at the originating switch (redirected call);
- Station C answers;
- Station A connects to Station C.

Figure 8
Anti-tromboning for Network Call Redirection (case 1), M1/DMS

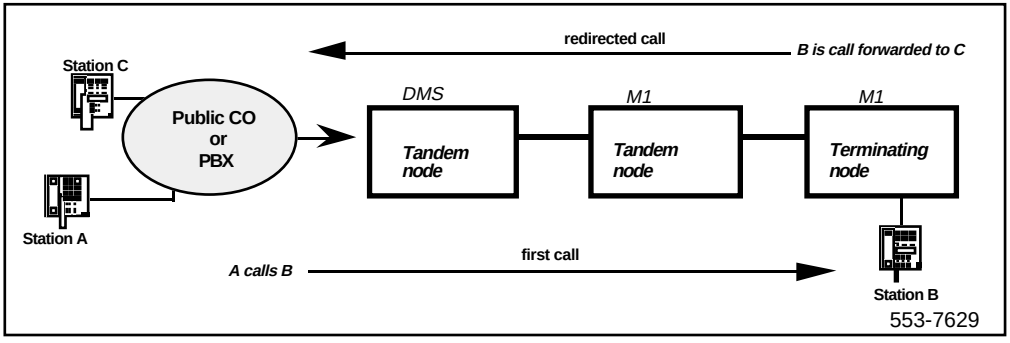

Figure 9 shows the results of anti-tromboning, after Station C answers the call.

- The call is bridged at the DMS tandem node, between A and C;
- The trunks between the terminating Option11C Compact and the tandem Option11C Compact are released by TAT;
- The trunks between the tandem Option11C Compact and the DMS are released by the RLT feature.

Figure 9
Results of anti-tromboning for Network Call Redirection (case 1), M1/DMS

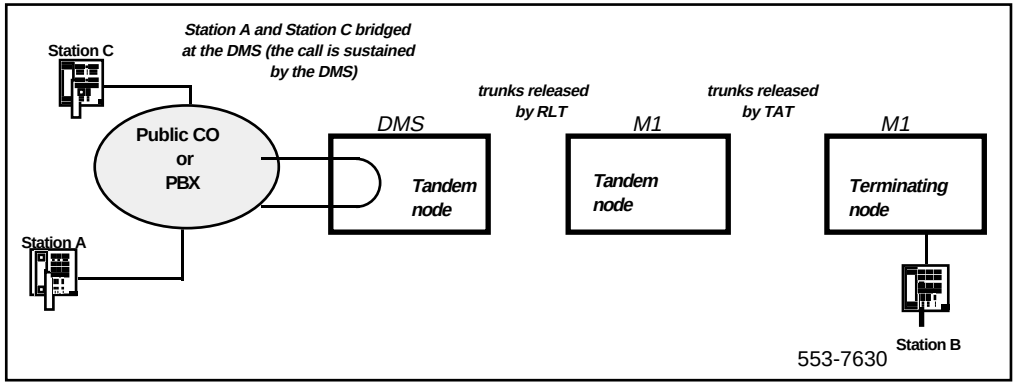

Anti-tromboning operation for Network Call Redirection (case 2), Option11C Compact interworking with DMS

In Figure 10, another example is presented where TAT optimizes redundant trunks due to a call forward. In this case, the trunks between a terminating Option11C Compact node and tandem Option11C Compact node are optimized. The originating node is a DMS-250. Station C is a centralized attendant or a Meridian Mail position.

- Station A located at an originating switch (Public Central Office or Private Exchange), makes an internodal call through a tandem DMS-250 and a tandem Option11C Compact node to Station B located at a terminating Option11C Compact node (first call);
- Station B, located at the terminating Option11C Compact node, is call forwarded to Station C located at the tandem Option11C Compact node (redirected call). Station C is a centralized attendant or Meridian Mail position;
- Station C answers;
- Station A connects to Station C.

Figure 10
Anti-tromboning for Network Call Redirection (case 2), M1/DMS

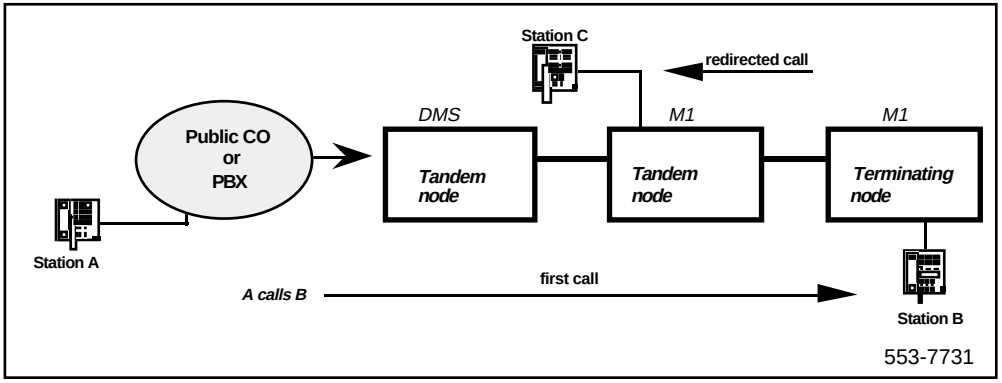

Figure 11 shows the results of anti-tromboning, after Station C answers the call.

- The trunks between the terminating Option11C Compact and the tandem Option11C Compact are released by TAT;
- Station C and Station A are connected.

Figure 11
Results of anti-tromboning for Network Call Redirection (case 2), M1/DMS

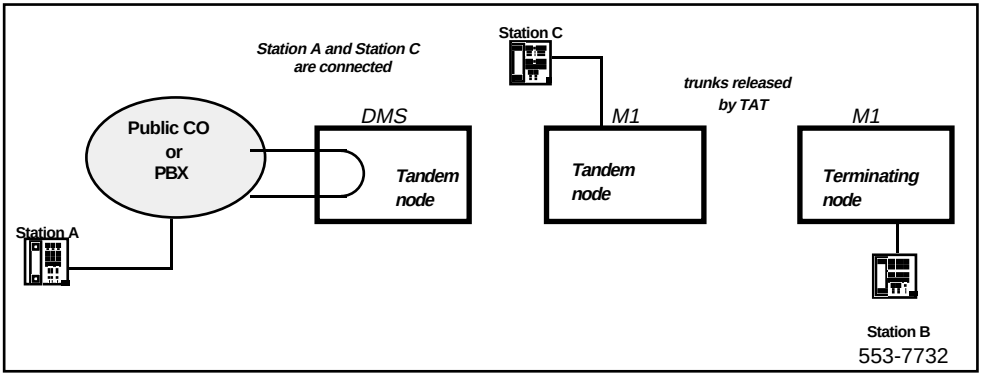

Anti-tromboning operation for Call Modification, DMS interworking with Option11C Compact

In Figure 12, the following case is represented for TAT as applied to a Call Modification scenario, with DMS interworking with Option11C Compact (in the example, a case of a call transfer is used. Please note that the same effect would take place if Station B conferences in Station C and then drops out, leaving Station A and Station C connected.)

- Station A, located at an originating Option11C Compact node, makes an internodal call through a tandem DMS node to Station B located at a terminating Option11C Compact node (first call);
- Station B, located at a terminating Option11C Compact node, answers the call and initiates a call transfer, through the tandem DMS node, to Station C located at the originating Option11C Compact node (second call);
- Station C answers;
- Station B completes the call transfer.

Figure 12
Anti-tromboning for Call Modification, DMS/M1

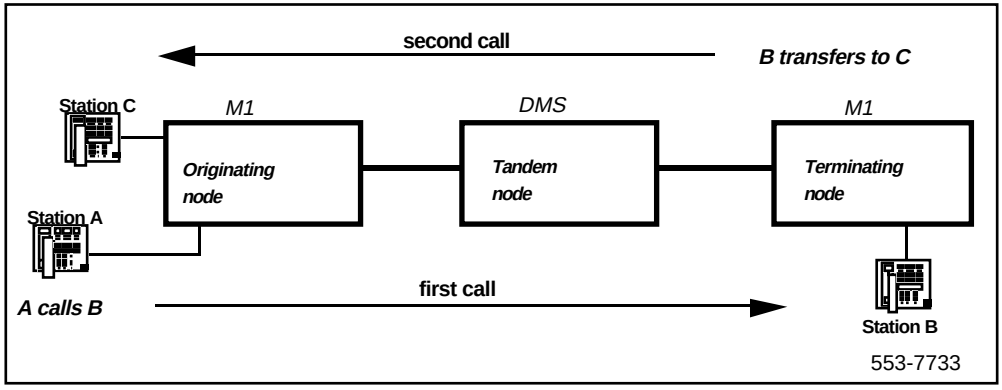

Figure 13 shows the results of anti-tromboning, after Station C answers the call.

- The call is bridged at the Option11C Compact originating node, between A and C;
- The trunks between the Option11C Compact terminating node and the DMS, and between the DMS and the Option11C Compact originating node and, are released by the RLT feature.

Figure 13
Results of anti-tromboning for network call transfer, DMS/M1

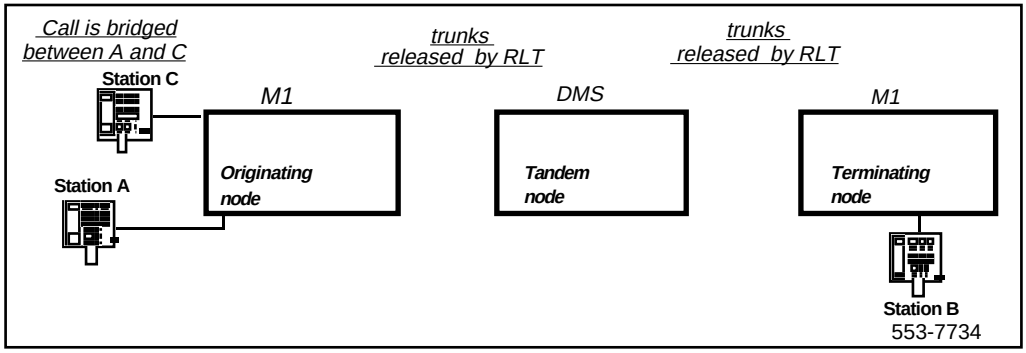

Anti-tromboning operation for Call Modification, Option11C Compact interworking with Option11C Compact

In Figure 14, the following case is represented for TAT as applied to a Call Modification scenario, with Option11C Compact interworking with Option11C Compact (in the example, a case of a call transfer is used.)

- Station A, located at an originating Option11C Compact node, makes an internodal call through a tandem Option11C Compact node to Station B located at a terminating Option11C Compact node (first call);
- Station B, located at a terminating Option11C Compact node, answers the call and initiates a call transfer, through the tandem Option11C Compact node, to Station C located at the originating Option11C Compact node (second call);
- Station C answers;
- Station B completes call transfer.

Figure 14
Anti-tromboning for network call transfer, M1/M1

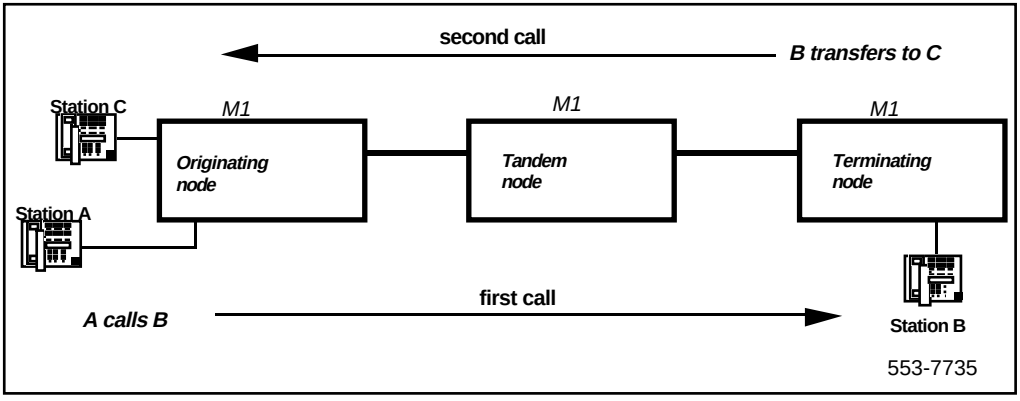

Figure 15 shows the results of anti-tromboning, after Station C answers the call.

- The call is bridged at the Option11C Compact originating node, between Station A and Station C;
- The tromboning trunks between the Option11C Compact terminating node and the Option11C Compact tandem node, and between the Option11C Compact tandem node and Option11C Compact originating node, are released by TAT.

Figure 15
Results of anti-tromboning for network call transfer, M1/M1

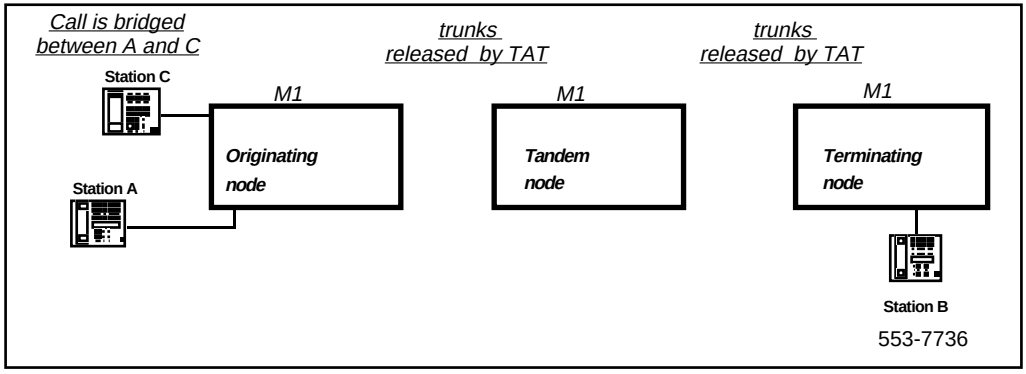

Trunk Anti-Tromboning and Trunk Optimization - Before Answer both equipped on the same Option11C Compact

TAT and TRO-BA (including Virtual TRO-BA) may be configured together on the same Option11C Compact switch.

While TAT and TRO-BA both provide trunk optimization capabilities, there are major differences pertaining to how each feature optimizes trunks.

- If TAT and TRO-BA are both configured on the same Option11C Compact switch, TRO-BA takes precedence over TAT (refer to "TRO-BA takes precedence over TAT" on page 161.) TRO-BA attempts to optimize a route before a call is answered, and then TAT attempts to optimize trunks after the call has been answered. The TAT feature enhances this capability by eliminating redundant trunks between Option11C Compact and DMS-250 switches equipped with the MCDN Release Link Trunk (RLT) feature.
- TAT and TRO-BA both eliminate redundant trunks for calls that are redirected by Network Call Forward All Calls, Network Call Forward No Answer, Network Call Forward Busy, or Network Hunting.
- TRO-BA will not optimize tromboned trunks resulting from a Call Transfer, while TAT will.
- TRO-BA will not optimize tromboned trunks resulting from an incoming trunk call, while TAT will.
- In the case of a call triangulation scenario, TRO-BA will attempt to eliminate tromboned trunks, while TAT will not. However, in this scenario, tromboning may actually result after TRO-BA has performed optimization. In this case, TAT will attempt to optimize the trunks. Refer to "TRO-BA and TAT functionality in a call triangulation scenario" on page 168.

Note: For more detailed information on the TRO-BA feature, refer to the 'Trunk Optimization-Before Answer' feature description module in this document.

TRO-BA takes precedence over TAT

The following provides a basic example of how TRO-BA takes precedence over TAT in a call forward scenario.

Referring to Figure 16:

- Station A on Node 1 calls Station B on Node 2, over an ISDN PRI/ISL/VNS trunk;
- Station B on Node 2 is call forwarded all calls to Station C on Node 1, over another PRI/ISL/VNS trunk (redirected call.) This means that tromboning exists between Node 1 and Node 2;

Figure 16
TRO-BA/TAT operating together, before optimization in a call forward scenario.

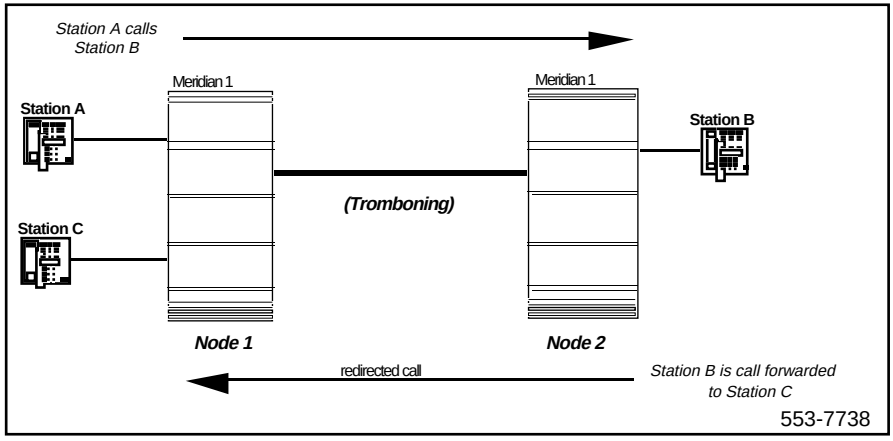

Before Station C answers, TRO-BA releases the tromboned trunks between Node 1 and Node 2, and bridges Station A and Station C locally. Refer to Figure 17. Since there no longer exist any tromboned trunks, TAT is not invoked.

Figure 17
After optimization has been applied by TRO-BA.

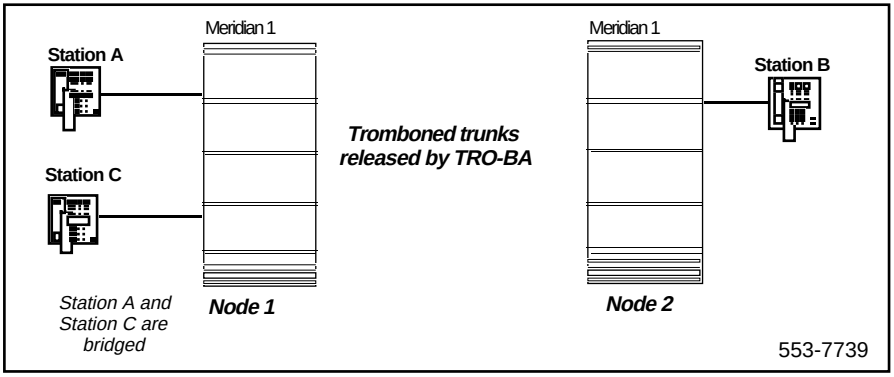

TRO-BA does not optimize trunks due to a call transfer - anti-tromboning is completed after the call is connected

As mentioned, TRO-BA will not release tromboned trunks that result from a call transfer. In this case, TAT will optimize the trunks, after the call is answered. Referring to Figure 18:

- Station A on Node 1 calls Station B on Node 2, over a PRI/ISL/VNS trunk (first call);
- Station B initiates call transfer to Station C on Node 1, over another PRI/ISL/VNS trunk, and completes the call transfer while Station C is still ringing. This means that a case of tromboning exists between Node 1 and Node 2 (second call);

Figure 18
TRO-BA/TAT operating together, before optimization in a call transfer scenario.

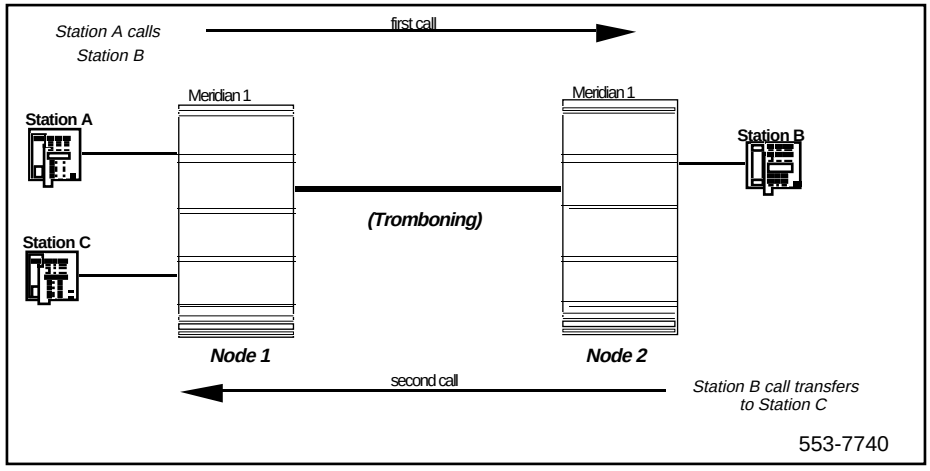

Since TRO-BA does not release tromboned PRI trunks resulting from a call transfer, the trunks between Node 1 and Node 2 remain tromboned until Station C answers the call transfer.

While the call is still in ringing state, TRO-BA does not release the tromboned trunks. After Station C answers, TAT releases the tromboned trunks between Node 1 and Node 2, and bridges Station C and Station A locally. Refer to Figure 19.

Figure 19
After TAT applied to tromboned trunks due to a call transfer.

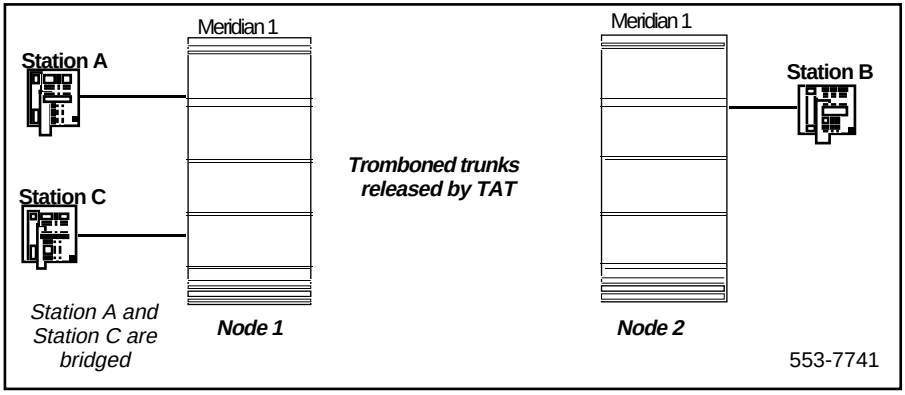

Trunk optimization with call redirection due to call transfer

Another case of TRO-BA and TAT interaction in the case of a call redirection initiated on the transfer key is as follows. Referring to Figure 20:

- Station A on Node 1 calls Station B, also on Node 1;
- Station B initiates a call transfer to Station C on Node 2, over a PRI/ISL/VNS trunk (first B-channel);
- Station C call forwards no answer to Station D on Node 1, over another PRI/ISL/VNS trunk (second B-channel, due to call redirection.) Therefore, tromboning of trunks exists between Node 1 and Node 2;

Figure 20
TRO-BA/TAT operating together, before optimization in a call transfer scenario.

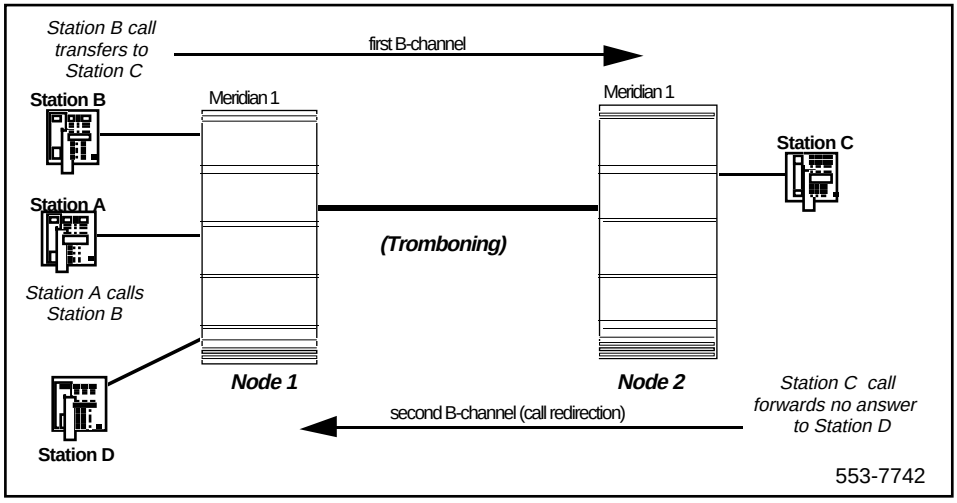

- Station B completes the call transfer while Station C is ringing. After the call is presented to Station D, TRO-BA optimizes the trunks, and bridges Station A and Station D locally. Refer to Figure 21.

Figure 21
Tromboned trunks released by TRO-BA.

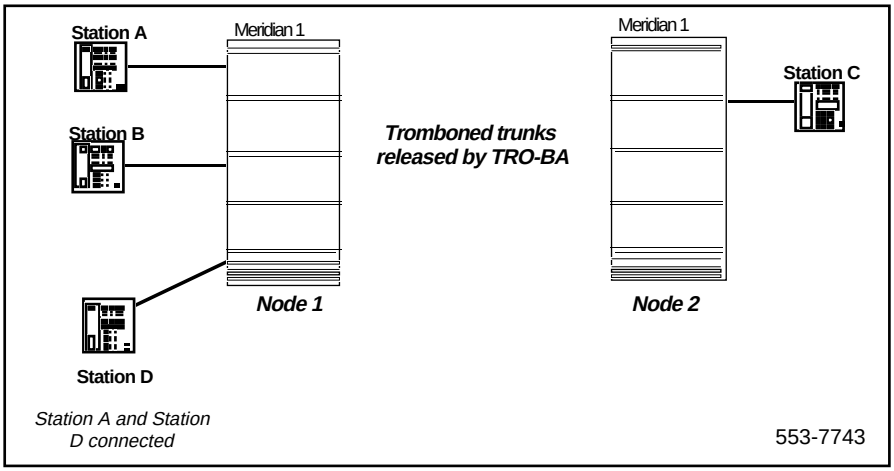

- If Station B does not complete the call transfer while Station C is ringing, but waits until Station D answers, TRO-BA will not perform optimization.
- After Station D answers, TAT applies anti-tromboning to release the trunks between Node 1 and Node 2, and bridges Station A and Station D locally. Refer to Figure 22.

Figure 22
Tromboned trunks released by TAT

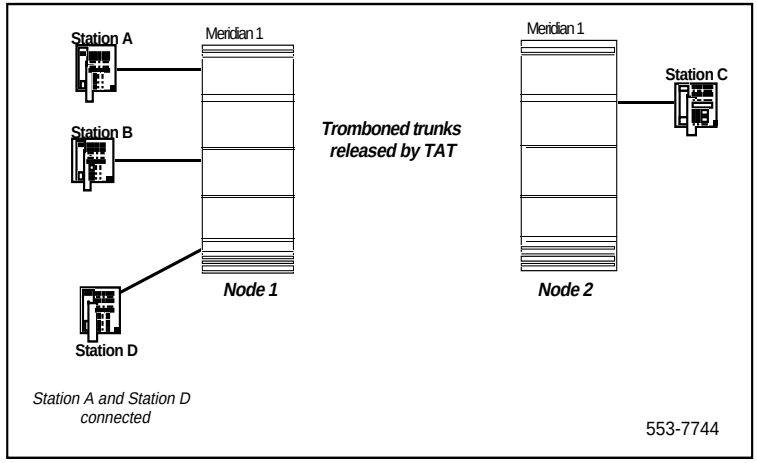

TRO-BA and TAT functionality in a call triangulation scenario

In the case of a call triangulation scenario, TRO-BA will attempt to eliminate tromboned trunks. TAT cannot perform this operation because a second D-channel is involved.

Referring to Figure 23:

- Station A on Node 1 calls Station B on Node 2 over a PRI/ISL/VNS trunk (first call);
- Station B on Node 2 is call forwarded or hunts to Station C on Node 3, over another PRI/ISL/VNS trunk (redirected call.) This means that two trunks are being used to handle one call;

Figure 23
Call path before TRO-BA has been applied.

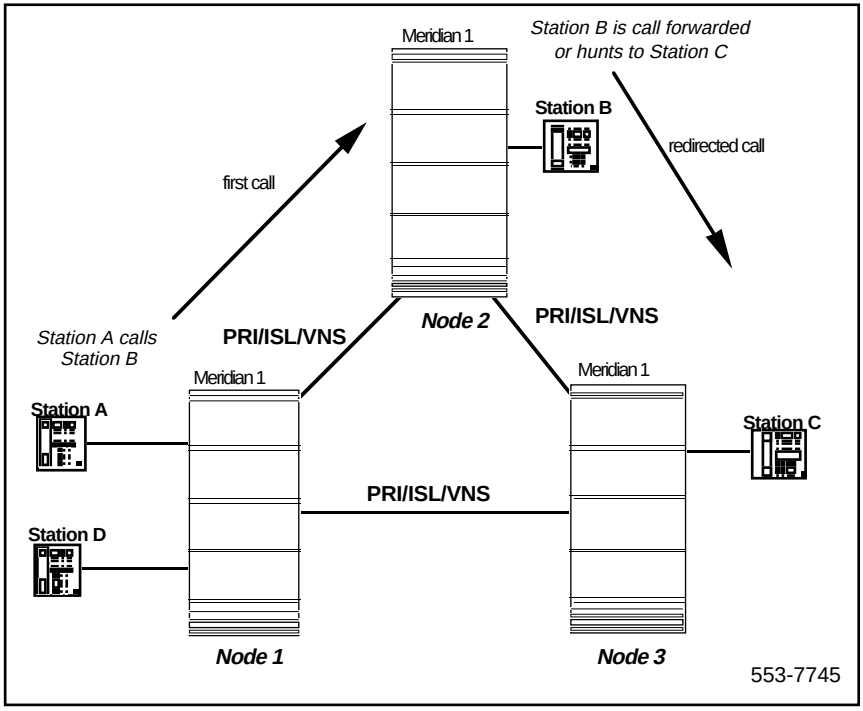

Before Station C answers, TRO-BA releases the trunks between Node 1 and Node 2, and between Node 2 and Node 3, and establishes a new PRI/ISL/VNS trunk connection between Node 1 and Node 3. Refer to Figure 24.

> ***Note:*** The TAT feature cannot provide this functionality, because multiple D-channels are used.

Figure 24
Call path after TRO-BA has been applied.

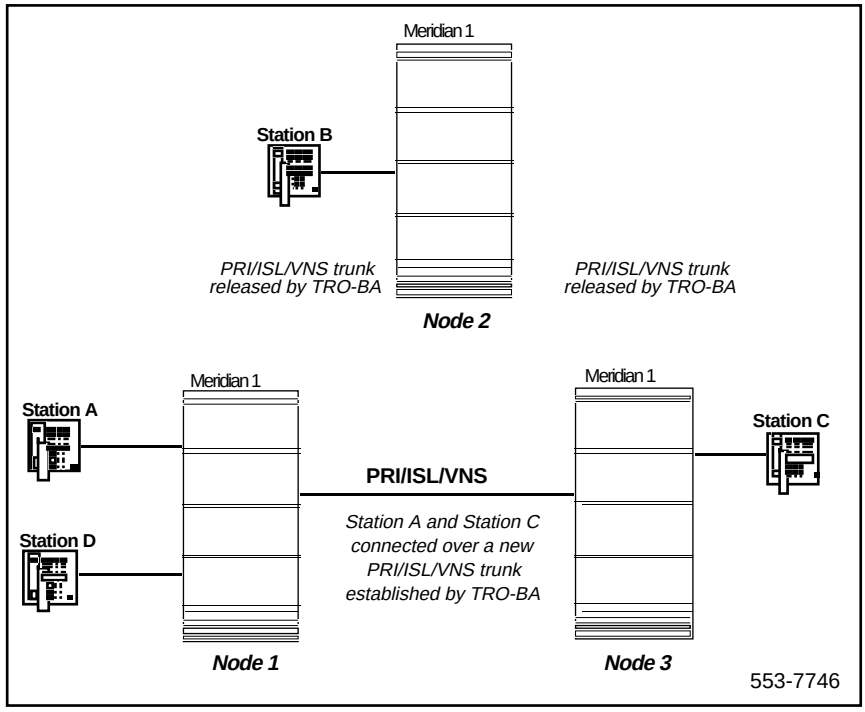

Tromboning may actually result after TRO-BA has performed optimization. In this case, TAT will attempt to optimize the trunks. An explanation whereby this scenario may occur follows.

- Station C answers the call, and initiates a call transfer to Station D on Node 1, over a separate PRI/ISL/VNS trunk. This results in tromboning between Node 1 and Node 3. Refer to Figure 25.

Figure 25
Tromboning of trunks after TRO-BA has been applied.

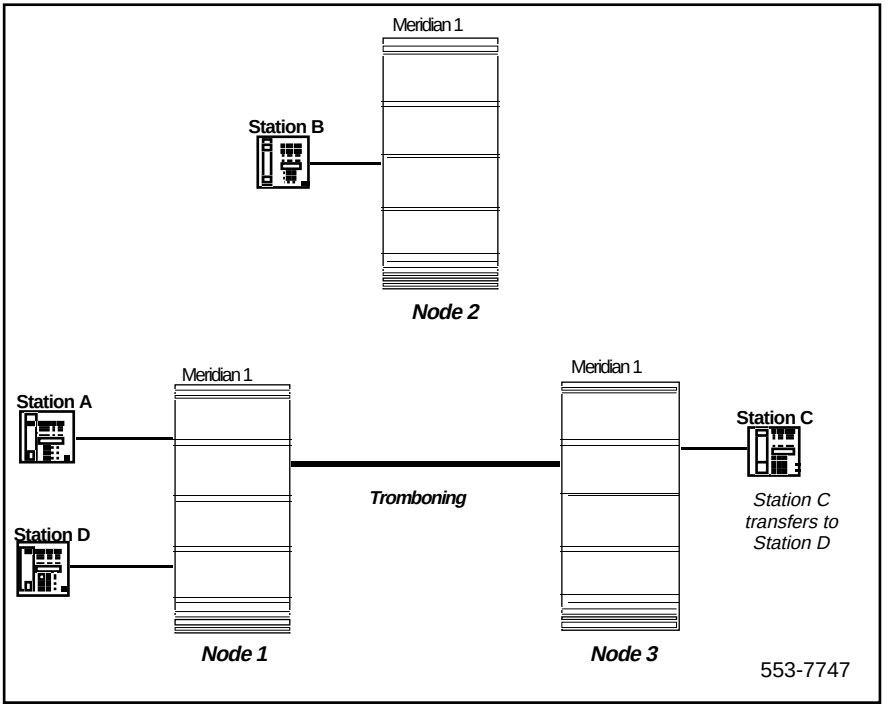

- After Station D answers the call, and Station C completes the call transfer, TAT releases the tromboned trunks between Node 3 and Node1, leaving Station D and Station A bridged locally. Refer to Figure 26.

Figure 26
Tromboned trunks released by TAT

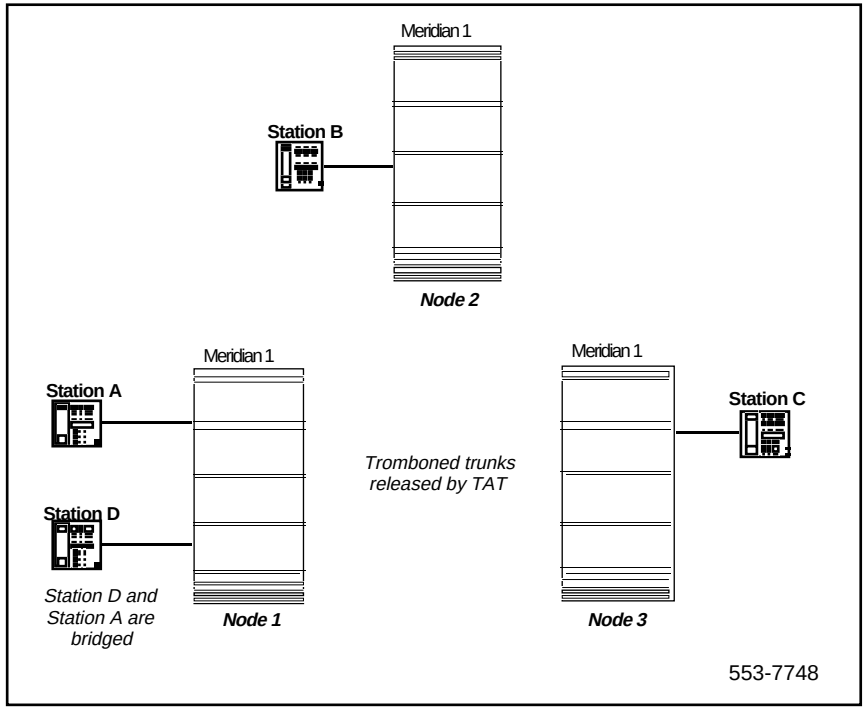

Operating parameters

To support Trunk Anti-Tromboning within a dedicated ISL/VNS configuration, a NTAK02 (minimum vintage **BB)** DCH circuit card must be used.

Trunk Anti-Tromboning will only be supported on the NTBK51BA D-Channel Daughterboard, for D-channel handling with PRA.

Anti-tromboning will be performed only after the third party answers, and provided that the tromboning PRI/ISL/VNS or analog trunks are associated with the same primary D-channel (with or without a backup D-channel) and the trunks are associated with the same customer. Anti-tromboning will not be performed if the tromboning trunks belong to different customers on the same node (even though they are associated with the same primary D-channel.)

Anti-tromboning will not be performed for a tromboned call between two attendants on the same node.

There are two types of protocols used for TAT operations, depending on the interface type. One is for the Option11C Compact to Option11C Compact interface, and the other is for Option11C Compact to the DMS-250 Sprint load equipped with the Meridian Customer Defined Network Release Link Trunk (RLT) feature.

If non-ISDN PRI trunks are involved in a call transfer call, ISDN signaling messages cannot be sent and anti-tromboning will not be performed.

Anti-tromboning will not be performed for tromboned trunks associated with a call originating on a set, and routed back to the same set.

TAT can cause a momentary interruption in data transmission during optimization. When TAT operations are performed at multiple tandem nodes, this effect is cumulative (in the milliseconds range.) Therefore, the impact of this loss is dependent on the terminals on both ends of the transmission, and may be recovered through re-transmission.

Feature interactions

Note: **The feature interactions described in this section assume that only TAT (and not TRO-BA) is configured on a Option11C Compact system.**

If TRO-BA is also configured with TAT on the same system, TRO-BA will take precedence over TAT, where it can.

Attendant

If an attendant has activated Busy Verify or Barge-in at the time that a message to invoke TAT is received, the anti-tromboning operation will be aborted.

Automatic Call Distribution (ACD)

The Trunk Anti-Tromboning feature will perform anti-tromboning operations to eliminate the PRI trunks associated with the same D-channel due to the following ACD operations: Enhanced Network Call Forward; Network ACD; Interflow Options; and Enhanced Interflow.

If an ACD agent is being observed at the time that a message to invoke TAT is received, the anti-tromboning operation will be aborted.

If an incoming PRI call that is in the ACD queue is answered by a Recorded Announcement (RAN), then the anti-tromboning operation will be performed only after an ACD agent answers the call.

Call Park Network Wide

The Trunk Anti-Tromboning feature is invoked if programmed at all interim Private Branch Exchanges (PBXs) in the call.

Conference

If the Conference feature is activated, the Trunk Anti-Tromboning feature will perform the anti-tromboning operations only when there are two parties remaining in the call, and the two parties are using PRI trunks associated with the same D-channel.

Referring to Figure 27:

— Station A, or an incoming DID trunk call, at the originating node, is connected to Station B at the terminating node over a PRI/ISL/VNS or analog trunk (first call);

— Station B conferences in Station C, also located at the originating node, over a second PRI/ISL/VNS or analog trunk that is associated with the same D-channel as the first (second call);

— During the extent of the three-party conference, the two trunks are tromboned.

Figure 27
Conference call before TAT

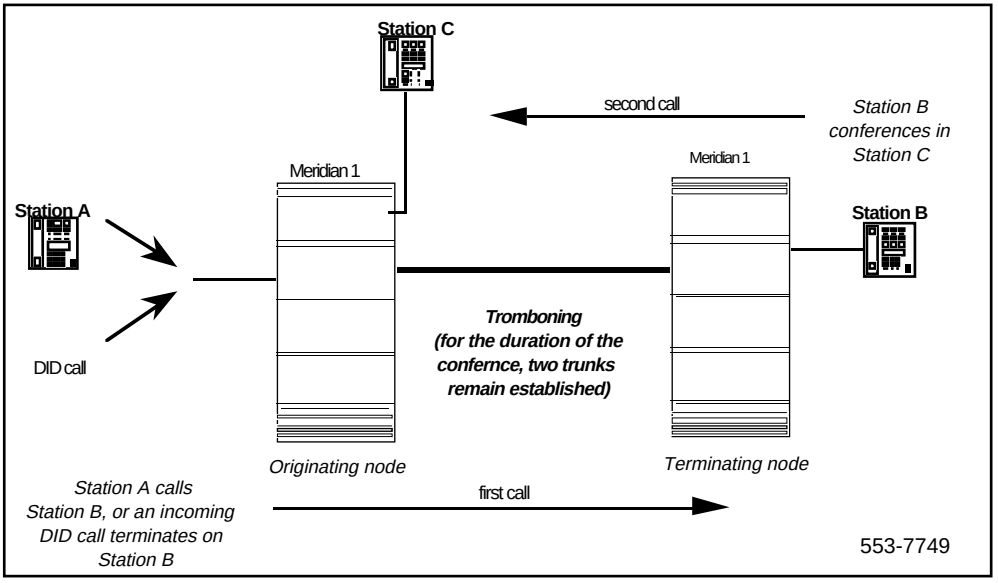

When Station B drops out of the conference, anti-tromboning is invoked (TAT will not be invoked as long as the conference call situation exists.) The two tromboned trunks are released, and Station A, or the DID trunk, and Station C are bridged. This is illustrated by Figure 28.

Figure 28
Conference call after TAT

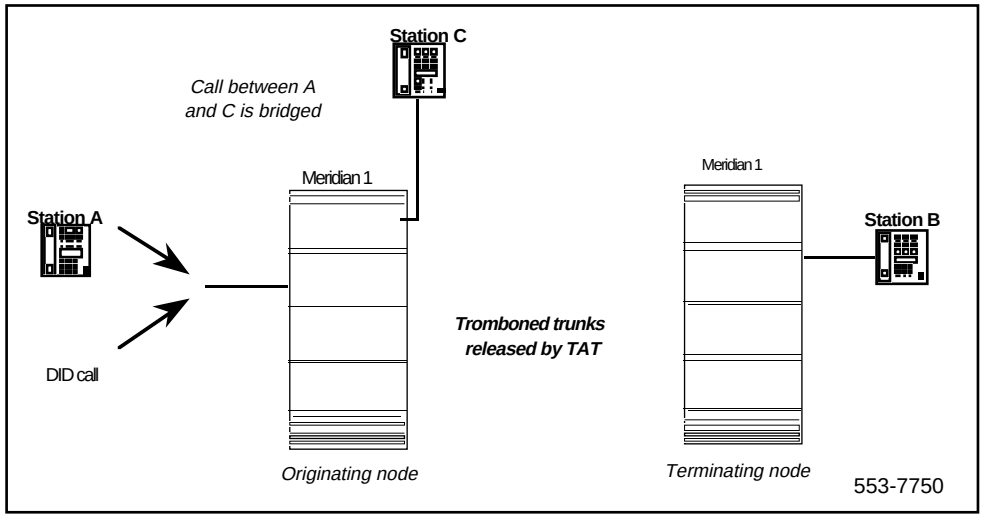

External Recorded Announcement.

If an attendant originates a call which, through call modification or call redirection creates tromboned trunks, and eventually terminates on a RANX equipment, TAT will not optimize the trunks. That is, TAT will not release tromboning PRI/ISL/VNS trunks resulting from an attendant initiating an outgoing trunk call.

INIT ACD Queue Call Restore

Trunk Anti-Tromboning is not supported on a call restored by INIT ACD Queue Call Restore.

Internal Call Forward (Option11C Compact to Option11C Compact)

TAT will not affect the operation of Internal Call Forward between two Option11C Compact switches, while applying anti-tromboning to trunks. Referring to Figure 29:

- Station A, or an incoming TIE trunk, on Node 1 calls Station B at Node 2. The call terminates on Station B at Node 2, over a PRI/ISL trunk (first call);
- Station B on Node 2 is call forwarded to Station C on Node 1 (redirected call). The trunks are tromboned.
- If the call is determined to be internal, and Station C is Internal Call Forwarded to Station D, the call is automatically forwarded to Station D on Node 2 over a third PRI/ISL trunk.

Figure 29
Internal Call Forward before TAT, Node 2 is a Option11C Compact.

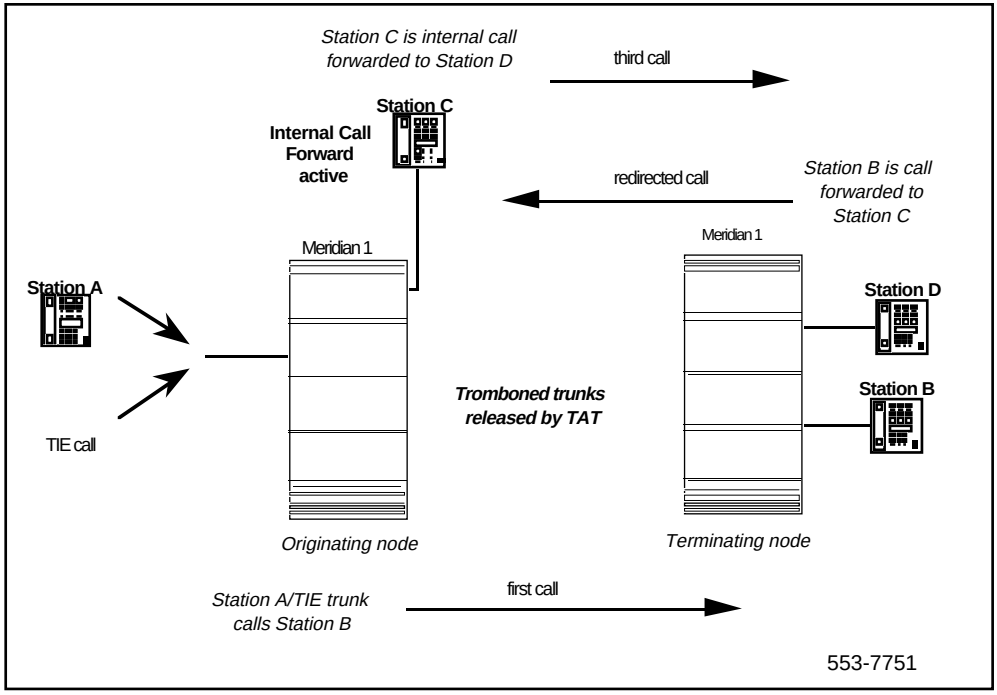

After Station D answers the call, TAT releases the tromboned trunks between Node 1 and Node 2. Refer to Figure 30.

Figure 30
Internal Call Forward after TAT, Node 2 is a Option11C Compact

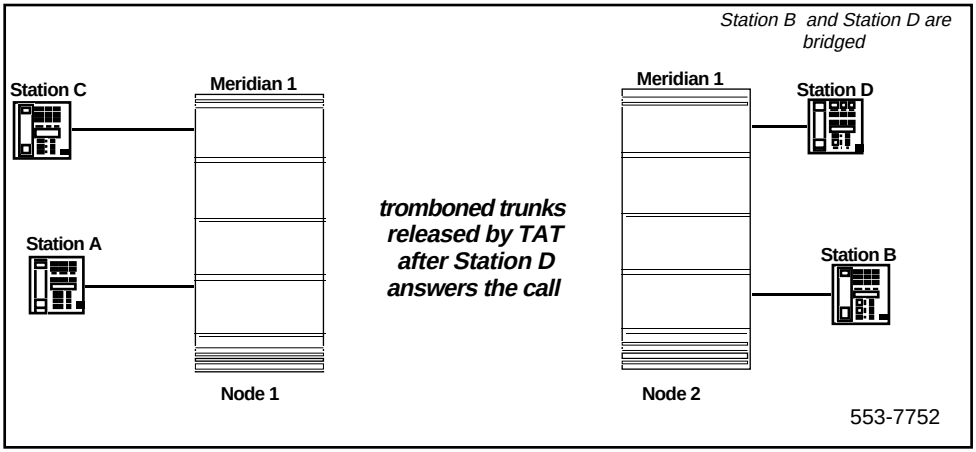

Network Call Pickup

The TAT feature will optimize tromboned trunks arising from the operation of the Network Call Pickup feature. For example, in Figure 31, Station A on Node 1 makes a call to Station B on Node 2 over a PRI/ISL/VNS or analog trunk. The call is picked up by station C on Node 1, over a separate PRI/ISL/VNS or analog trunk. After the call has been picked up, TAT will apply anti-tromboning to release the two tromboned PRI trunks. Station A and Station C are connected locally. Refer to Figure 32.

Figure 31
Network Call Pickup before TAT

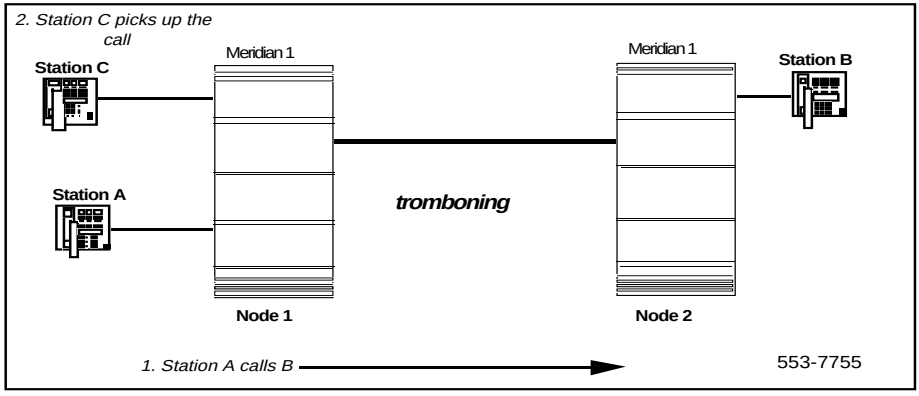

Figure 32
Network Call Pickup after TAT

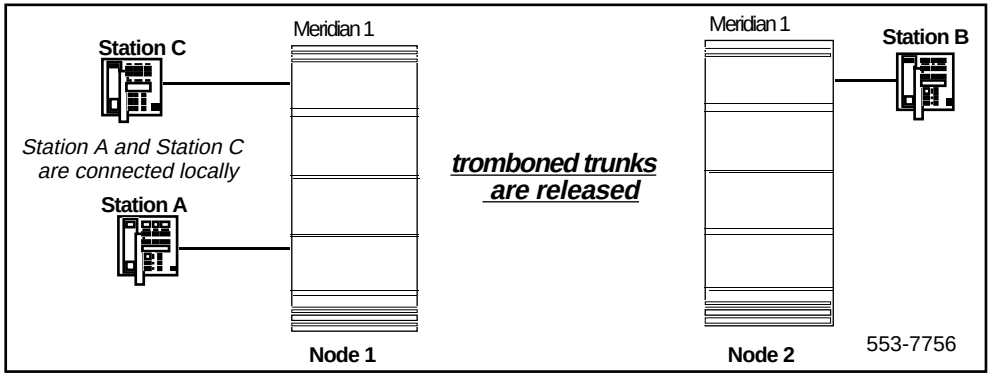

Network Call Redirection

The Trunk Anti-Tromboning feature eliminates the tromboning of PRI/ISL/VNS or analog trunks resulting from the operation of any of the following Network Call Redirection features:

- Network Call Forward Unconditional
- Network Call Forward No Answer
- Network Call Forward Busy
- Network Call Forward by Call Type
- Network Hunt
- Internal Call Forward

Figure 33 illustrates the following scenario:

- Station A, on the originating node, calls Station B, on the terminating node, across a tandem node over a PRI/ISL/VNS trunk (first call);
- Station B is call forwarded or hunts over another PRI/ISL/VNS trunk, to Station C located on a tandem node (redirected call.) This causes tromboning between the terminating and the tandem nodes.

Figure 33
Network Call Redirection before TAT

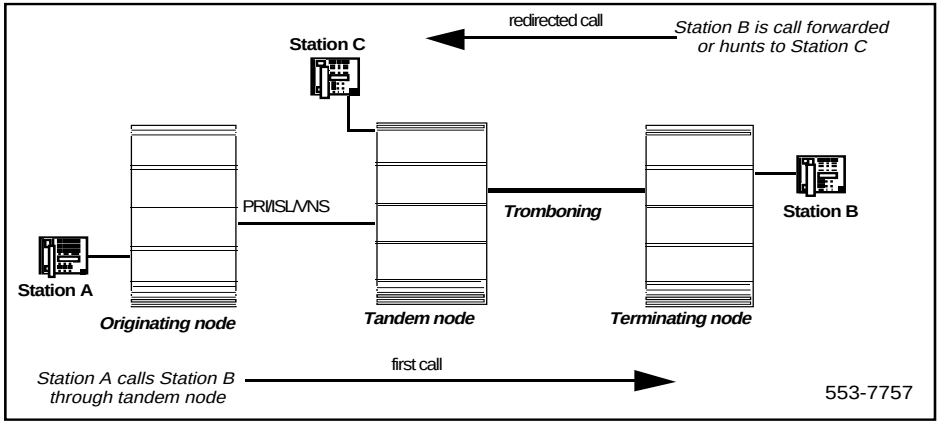

After Station C answers, anti-tromboning is invoked. This causes the tromboned trunks to be released. Station A and Station C are connected at the tandem node. The results of this anti-tromboning are shown in Figure 34.

Figure 34
Network Call Redirection after TAT

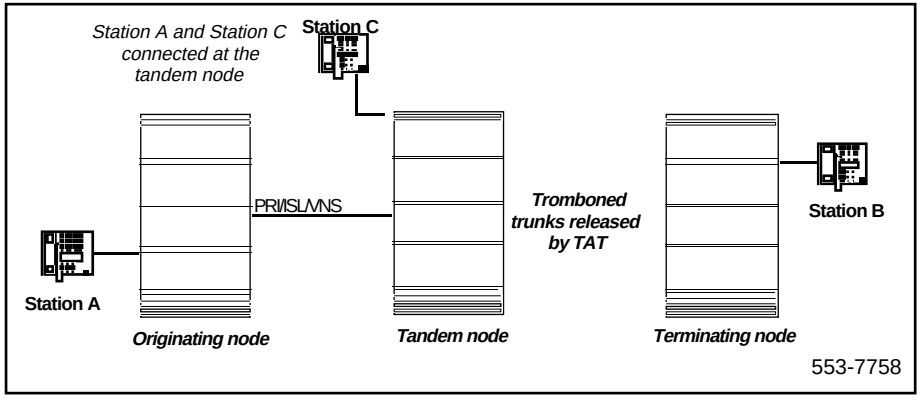

Radio Paging System

If an attendant originates a call which, through call modification or call redirection creates tromboned trunks, and eventually terminates on a Radio Paging equipment, TAT will not optimize the trunks. That is, TAT will not optimize tromboning PRI/ISL/VNS trunks resulting from an attendant initiating an outgoing trunk call.

Trunk Route Optimization - Before Answer

See "Trunk Anti-Tromboning and Trunk Optimization - Before Answer both equipped on the same Option11C Compact" on page 160.

Feature packaging

The Trunk Anti-Tromboning is packaged under (TATO), package 312. The following packages are required as dependencies:

— Multi-purpose Serial Data Link (MSDL) package 222;

— Integrated Services Digital Network (ISDN) package 145; and

— 1.5 Mbps Primary Rate Access (PRA) package 146; or

— Advanced ISDN Network Services (NTWK) package 148.

Feature implementation

LD 17 — Configure TAT functionality to be performed at the far-end switch.

Prompt	Response	Description
REQ	CHG	Change existing data.
TYPE	ADAN	Type of change.
- ADAN		Action Device and Number.
	NEW DCH x CHG DCH x	Add D-channel x. Change D-channel x.
- CTYP	MSDL	The NTMW04 DTI/PRI card.
- CDNO	x	The card number for the NTMW04 DTI/PRI card.
- PORT	x	Port number on the NTMW04 DTI/PRI card.
...		
- IFC	SL1 S100 D100 D250	Interface type for D-channel. Either SL1, S100, D100, or D250 may be entered. Currently, SL1 and D250 are the only interfaces supported by TAT.
...		
- RLS	xx	Release ID of the switch at the far end of the D-channel.
- RCAP	TAT	Remote Capabilities. TAT must be entered to enable Trunk Anti-Tromboning.

Feature operation

The Trunk Anti-Tromboning feature is transparent to the user, provided all datafills and hardware are assigned and equipped properly.

Trunk Optimization (Option11C Compact to Option11C Compact only)

Trunk Optimization provides better utilization of customer networking facilities. The Trunk Optimization feature allows the Option11C Compact to optimize trunks for redirected calls before answer. Trunk Optimization works with Call Forward All Calls, Call Forward No Answer, Hunting, and Busy Conditions, and avoids unnecessary use of additional channels or trunks.

Trunk Optimization does not apply to DID calls or calls originated by a non-ISDN TIE trunk.

An example of Trunk Optimization is shown in Figure 35. If a call is placed from originating station A to a remote station B over route 1, and the call is forwarded to station C over route 3, the system can reconnect calls on the most economical route available. In this case, the call is physically directed over route 2, allowing routes 1 and 3 to be used for additional calls.

It is important to point out the mechanism used to achieve trunk optimization:

— The redirecting node will send a message to the originating node informing it of the redirection number and the redirection reason.

— If the originating node supports trunk optimization and has a first route choice member available to the destination PBX, it will send a message back accepting Trunk Optimization.

  Note: First choice member is part of ESN route list entries in overlay 86.

— The redirecting node will send a message to release the connection.

— The originating node will confirm the disconnect and will establish a new non-redirected connection to the redirected number.

This process may repeat itself for every redirection hop that a call takes. The number of hops is software programmable.

If the originating node does not support Trunk Optimization, the call will then proceed without optimization on the current route. Trunk Optimization is programmable on a route basis using prompt TRO.

Figure 35- Trunk Optimization example

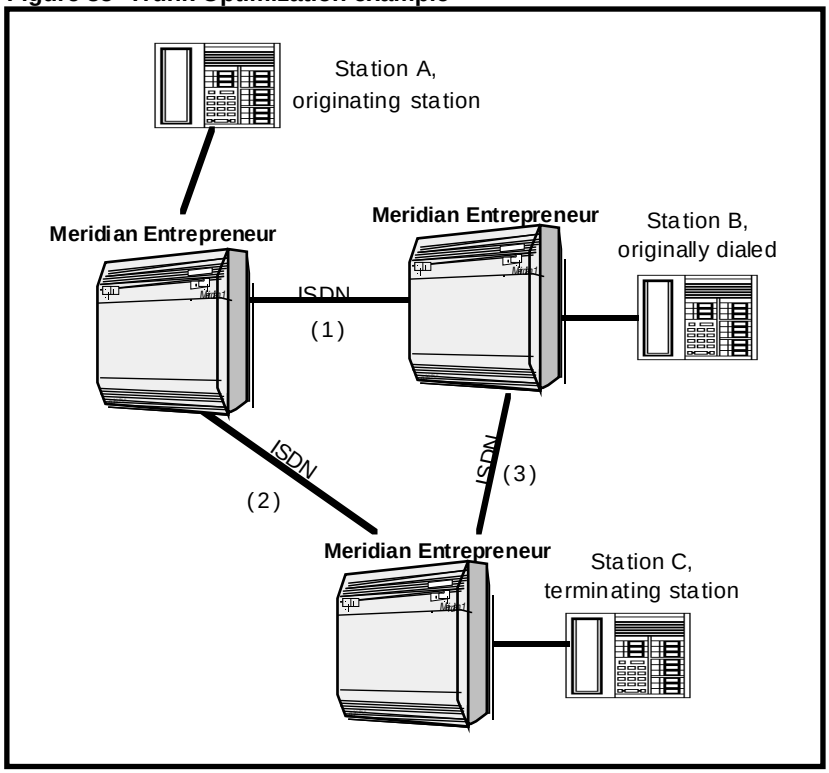

Note: TRO does not apply to DID calls or calls originated by a non-ISDN TIE trunk. TRO is transparent to users for NCRD.

If the users have alpha-numeric display telephone sets:

— the “calling party” will see:

- the number originally dialed,
- the number connected to, and
- the reason for redirection

— the “called party” will see:

- the originating number,
- the originally called number, and
- the reason for redirection

Package Requirements

The Trunk Optimization feature requires the following software options:

ISDN	package 145
ISL	package 147
NTWK	package 148
PRI	package 146

Trunk to Trunk Connection

The Trunk to Trunk Connection feature introduces the following capabilities: transfer on ringing of an external trunk across the network, transfer of one supervised outgoing external trunk to another, conference of external trunks and outgoing trunk to trunk charging. These capabilities are available to a PBX set, Option11C Compact digital set or an Attendant Console.

Transfer on Ringing of External Trunk over Network

Allows the transfer on ringing of an established external trunk call over a supervised network trunk. If the called party does not answer within a specified time, the call will slow answer recall to the attendant on the transferring node. This capability ensures that available network resources are not occupied indefinitely.

Transfer of Outgoing External Trunk

Allows the connection of one outgoing external trunk to another through Call Transfer provided that both external trunks are supervised. This capability prevents external trunks from remaining connected indefinitely in instances where an external party disconnects when disconnect supervision is not available.

Conference of External Trunks

Allows external trunks to remain established in a conference call in circumstances when all external trunks involved in the call offer disconnect supervision.

Outgoing Trunk to Trunk Charging

Ensures that outstanding charging information, relevant to both outgoing calls, is contained in relevant Call Detail Recording records.

Operating parameters

Slow answer recall occurs when an external trunk is transferred on ringing across an answer supervised network TIE trunk to a set that does not answer. However, the resulting recall will be to an attendant on the transferring node and not to the original set which transferred the call.

When transferring one outgoing trunk to another, it is required that the two external calls involved are both answered prior to completing the transfer. Both external trunks involved must have both answer and disconnect supervision.

When the last internal party disconnects from a conference call, involving two or more external trunks, all external trunks must have disconnect supervision for the call to remain established. If any one of the remaining external trunks does not have disconnect supervision, all external trunks will be dropped.

Feature interactions

Call Transfer

To transfer an external trunk on ringing across the network, the external trunk and internal TIE line must have both answer and disconnect supervision, and the external call must be established. To transfer one outgoing external trunk to another, both external trunks must have answer and disconnect supervision, and both external calls must be established.

Centralized Answering Position

The Option11C Compact system may not have an actual attendant console. Instead, the Option11C Compact will use Centralized Answering Position (CAP). The CAP Directory Number (DN) is the customer Night DN. Since no attendant is configured, the customer is viewed to be in Night Service and any calls for the attendant are directed to the CAP. Slow Answer Recall may be presented to a CAP when no attendant console is configured for the customer.

Conference

Trunk to Trunk connection allows external trunks to remain established in a call, provided that all external trunks involved have disconnect supervision. With respect to charging costs associated with a conference call, once the last set involved in the conference call disconnects, a search is made of all remaining trunks in the call to determine which call is established in the call for the longest period of time. This trunk is the chargeable Terminal Number (TN). This process is repeated to find the next chargeable TN.

Message Registration

The last party releasing the call collects the total value of outstanding Periodic Pulse Metering (PPM) generated on outgoing trunks. If the last party is an internal set, the outstanding PPM is stored against the meter of the set. If the last party is an internal TIE trunk, the outstanding PPM is stored against the meter associated with the internal TIE trunk access code. If the last party is an outgoing external trunk, the outstanding PPM is stored against the meter associated with the external trunk access code.

Night Service

If an attendant is placed in Night Service, calls to the attendant are directed to a station with the Night DN. Recalls are not directed to the Night DN. Recalls are put in the attendant call waiting queue when in Night Service.

Trunk Barring
Trunk Group Access Restriction

Trunk Barring and Trunk Group Access Restriction takes precedence over the Trunk to Trunk Connection feature.

Feature packaging

Trunk to Trunk Connection is included in base X11 27 system software.

Note: DID to TIE (DTOT) for Japan package 176 must be restricted to enable this feature.

Feature implementation

LD 15 – Modifications to Customer Data Block.

Prompt	Response	Description
REQ	CHG	Change.
TYPE	ATT	Attendant console prompts.
CUST	0	Customer number.
- RTIM	xxx yyy zzz	Enter defined value for the Slow Answer Recall timer where: xxx = 0-(30)-378 Slow Answer Recall yy y= 0-(30)-510 Camp On Recall zzz = 0-(30)-510 Call Waiting Recall
<CR>		
TYPE	NET	Trunk and network options.
CUST	0-99	Customer number.
...		
- ISDN	YES	Change the Integrated Services Digital Network options.
...		
- PSTN	NO	Enter “NO” to allow no limit on the number of Public Switched Telephone Network trunks in any one network connection.
...		
- DITI	YES	Allow Direct Inward Dialing to TIE connections for customer.

- TRNX	YES	Allows transfer on ringing of supervised external trunks across the network. If “NO” is entered, transfer on ringing of supervised external trunks across the network are prevented.
- EXTT	YES	Allows connection of supervised external trunks. If “NO” is entered, connection of supervised external trunks is prevented.

Feature operation

No specific operating procedures are required to use this feature.

PRI/DTI maintenance

Maintenance overview

From a maintenance perspective, Option11C Compact DTI/PRI operation consists of these major aspects:

— hardware and software states

— near-end and far-end status

— link and/or span integrity

— clocking status

— frame alignment

Option11C Compact PRI/DTI operation is monitored and reported on through maintenance messages, out-of-service alarms, and circuit card faceplate LEDs. Bantam monitor jacks are located on the faceplate of the NTMW04 PRI/DTI card.

Option11C Compact maintenance provides several tools, either manual or automatic, for maintaining effective PRI/DTI operation. These tools are service change and maintenance commands that are accessible through the software overlays and resident diagnostic routines.

Monitoring Option11C Compact DTI/PRI operation

Maintenance messages

The following sections describe the maintenance messages that may appear on the Option11C Compact maintenance TTY as a result of DTI or PRI operation.

D-Channel status and error conditions are reported as DCH messages. PRI/DTI status and error conditions are shown in Table 17. (Additional information on PRI and DCH messages can be found in the Option11C Compact Software Guide.)

Table 17
Maintenance messages

Message	Meaning
DTA	Digital Trunk Alarms (Resident Monitor)
DTC	Resident CC Monitor
DTI	Digital Trunk Interface and CC (LD60)
PRI	Primary Rate Interface

Message descriptions

Maintenance messages provide near and far end switch status. Both service and service acknowledge messages are supported on PRI B-channels.

Service and service acknowledge messages for B-channels are supported between:

— Option11C Compact to Option11C Compact

— Option11C Compact to Meridian 1/SL-1

— Option11C Compact to DMS-100

— Option11C Compact to DMS-250

— Option11C Compact to AT&T ESS4 and ESS5

The statuses reported by the service and service acknowledge messages for B-channels:

— in-service

— maintenance

— out-of-service.

Near-end and far-end sub-categories are defined for each maintenance status. See the table below for possible combinations of near-end and far-end statuses, and the channel capability for each status. When the near-end and far-end status does not match, the more severe maintenance status takes effect over the less severe maintenance status.

Table 18
Maintenance message and status combinations

Near End Status	Far End Status	B or ISL Channel capability
In-service	In-service	Incoming and outgoing call allowed
In-service	Maintenance	Incoming calls allowed only
In-service	Out-of-service	Not allowed to use
Maintenance	N/A	Not allowed to use
Out-of-service	N/A	Not allowed to use

Note: Enabling/Disabling of Service Messages must be coordinated between the two ends. Enabling Service Messages at one end and not the other will result in B-channels being placed out-of-service.

Message functions

Service messages are used to monitor the following:

— D-Channel establishment

— D-Channel sanity polling

— B-channel status change

— Channel status audit.

D-Channel establishment
When the D-Channel establishes, the B-channel status is supported by sending service messages for each B-channel controlled by a D-Channel. This messaging allows the far end to synchronize its channel states. The service messages are sent when the D-Channel is brought up automatically by the system or manually by using LD 96.

D-Channel sanity polling
If a D-Channel has been idle for 30 seconds, a service message is sent to poll the sanity of the link. The service message is sent regardless of whether the near end is configured as master or slave.

B-channel status change
Whenever there is a status change for a B-channel or an ISL channel, the new status is reported to the far end via a service message. Status change can occur through service change or maintenance operations, such as the addition or deletion of a channel in LD 14, or disabling of the associated loop, shelf, card or unit in LD 30, LD 32, LD 36, LD 41 or LD 60.

Channel status audit
LD 30 is enhanced to allow channel status audit to be initiated. The channels associated with each D-Channel are examined and their status is reported to the far end via service messages.

Activating service messages

You activate the service messages in LD 96 on a per D-Channel basis. The backup D-Channel (if equipped) automatically operates in the same mode as the primary D-Channel. The commands are listed in Table 19.

Table 19
D-Channel messages

Command	Description
ENL SERV N	turns on the support of service and service acknowledge messages for DCH link N.
DIS SERV N	turns off the support of service and service acknowledge messages for DCH link N.
STAT SERV (N)	displays the current service and service acknowledge message SERV setting for individual DCH N or DCH.

When configuring these messages, the SERV command should only be enabled if both switches are equipped with a minimum of X27 software. The status of Service Messages for each D-Channel is saved by Equipment Data Dump (EDD), and is set automatically after each system load.

> ***Note:*** D-Channels on each side of the link must be disabled in order to enable service messages.

Alarms

DTI/PRI Yellow Alarm (remote alarm)

A yellow alarm on the Option11C Compact, indicated by the state of the YEL LED on the NTMW04 PRI/DTI card, is notification of a red alarm at the far end (remote end). The fact that the NTMW04 is receiving the yellow alarm pattern indicates that there is a T1 connection, but the far end is not ready.

It is possible, however, that the T1 connection is one-way only — that is, receiving only, since this end is receiving the alarm. The yellow alarm is transported in one of two ways: using digit-2 or the facility data link (DG2 or FDL).

When the NTMW04 receives a yellow alarm, the channels are placed into the maintenance busy state.

Each time a yellow alarm is generated, a counter is incremented. When the yellow alarm 24-hour threshold (prompt RALM in LD 73) is reached, the NTMW04 must be restored to service manually.

DTI/PRI Red Alarm (local alarm)

A red alarm (local alarm) indicates that the digital trunks or B-channels have been taken out of service (OOS) due to a loss of frame alignment lasting more than 3 seconds, or due to some facility performance OOS threshold being exceeded.

Maintenance and OOS messages are discussed later in this chapter.

NTMW04 faceplate LEDs

The NTMW04 circuit card has a total of seven faceplate LEDs. Five of the LEDs are directly associated with the operation of the NTMW04 circuit card.

The remaining two LEDs are associated with the integrated Clock Clocker and D-Channel interface capability. Table 20 provides a summary of the NTMW04 faceplate LEDs.

Table 20
NTMW04 faceplate LEDs

Affected circuitry	LED	State	Definition
NTMW04	DIS	On (Red)	The NTMW04 card is disabled.
		Off	The NTMW04 is enabled.
NTMW04	ACT	On (Green)	The NTMW04 card is in an active state. No alarm states exists. The card has passed internal self test.
		Off	The card has failed internal self test.
	RED	On (Red)	A red-alarm state has been detected.
		Off	No red alarm.
	YEL	On (Yellow)	A yellow alarm state has been detected.
		Off	No yellow alarm.
	LBK	On (Green)	The NTMW04 is in loop-back mode.
		Off	The NTMW04 is not in loop-back mode.
Clock Recovery Circuit	CC	On (Red)	The clock recovery circuitry is disabled.
		On (Green)	The clock recovery circuitry is enabled, and is automatically locked to a reference.

Affected circuitry	LED	State	Definition
DCHI	DCH	On (Red)	The DCHI circuitry is disabled.
		On (Green)	The D-channel is established.
		Off	The D-channel is not configured (for DTI), or is trying to become established (for PRI).

Note: Only one of the five NTMW04 related LEDs should be on at any one time.

Monitor Jacks

The NTMW04 has two bantam jacks (RCV and XMT) located on its face-plate. They may be used to monitor the performance of the carrier in the receive and transmit direction. The jacks allow the convenient connection of external T-1 test equipment and ISDN protocol analyzers. Such external test equipment is not normally required for the operation and maintenance of DTI/PRI.

Option11C Compact TMDI maintenance commands

Note: D-channel status and error conditions are reported as DCH messages. These messages can be found in the Option11C Compact *Software guide*.

TMDI maintenance commands

Table 21 provides a list of the TMDI commands. Note that “x” is the TMDI device number, as defined in LD 17 using the DLOP prompt. These commands are also provided in the Input/Output Diagnostic (LD 37) and the Link Diagnostic (LD 48), and LD 42.

Table 22 provides a list of the TMDI commands available for D-channels on an TMDI port.

WARNING

You must disable the D-Channel and clock-controller daughterboards before unseating circuit cards, otherwise the system will INIT and momentarily interrupt call processing.

WARNING

Extreme care must be taken when enabling the D-Channel message monitoring option due to the possible heavy volume of messages during normal traffic. Use this command only during very light or no traffic conditions for trouble-shooting purposes. Remember to disable the monitoring tool when you are finished - it does not time out. Monitor enabled status is saved by EDD and will remain enabled even after a SYSLOAD.

The port (TTY) performing the monitoring MUST have MTC and BUG programmed.

Table 21
TMDI commands (LD 96)

Command	Action
DIS TMDI x (ALL)	Disable TMDI card x
DIS TMDI x u	Disable TMDI card x unit u
ENL TMDI x (ALL, FDL)	Enable TMDI card x
ENL TMDI x u	Enable TMDI card x unit u
RST TMDI x	Reset TMDI x
SLFT TMDI x	Invoke self-test on TMDI
STAT TMDI (x FULL)	Get TMDI status

Table 22
TMDI D-channel commands (LD 96)

Command	Action
DIS LLB x	Disable local loop back mode on TMDI DCH x
DIS RLB x	Disable remote loop back mode on TMDI DCH x
DIS TEST x	Disable TEST mode on TMDI DCH x
DLIF DCH xx FDL	Force download a PRI interface table
ENL LLB x	Enable local loop back mode on TMDI DCH x
ENL RLB x	Enable remote loop back mode on TMDI DCH x
ENL TEST x	Enable TEST mode on TMDI DCH x
MAP DCH x	Get physical address and switch settings for D-channels
PCON DCH x	Print configuration parameters on TMDI DCH x
PMES DCH x	Print incoming layer 3 messages on TMDI DCH x
PTRF DCH x	Print traffic report on TMDI DCH x
TEST LLB x	Start local loop back test on TMDI DCH x
TEST RLB x	Start remote loop back test on TMDI DCH x

NTMW04 DTI/PRI power on self-test

When power is applied to the NTMW04 DTI/PRI circuit card, the card performs a self test. The LEDs directly associated with the NTMW04 PRI/DTI card are DIS, ACT, RED, YEL, and LBK.

Table 23 provides the state of the NTMW04 LEDs during the self-test procedure.

Table 23
NTAK09 LED states during self-test

Action	LED State
Self-test in progress	If the self-test passes, the top five LEDs flash on and off three times. When the self-test is completed, the LEDs go to their appropriate states (see Table 20).

MTMW04 DTI/PRI local self-test

The local self-test, also called a local loopback test, checks speech path continuity, zero code suppression, remote alarm detection, and A & B bit signalling. This test is performed manually on a per-loop (or link- 24 channels) or per-channel basis. The local loopback test performs a local logical loopback and does not require any external loopback of the T-1 signal.

Restrictions and limitations

The DCHI and NTMW04 DTI/PRI card must be disabled before performing the self-test on the entire DTI/PRI card. Individual channels must be disabled before performing a self test on a particular channel.

Self testing the MTMW04 DTI/PRI card

To perform a self test on the entire NTMW04 DTI/PRI card, do the following:

1 Disable the DCHI using LD 96:

LD 96

DIS DCH N

2 Disable the NTMW04 DTI/PRI card and run the self-test using LD 96:

LD 96

DISL TMDI x

3 Invoke the self test.

SLFT TMDI x

Remote Loopback and remote self test

The remote loopback and the remote self test are performed manually per loop (or per card in Option11C Compact).

Remote Loopback

The RLBK C command puts the NTMW04 DTI/PRI into loopback towards the far end so a remote self test can be performed on equipment at the far end.

> ***Note:*** The NTMW04 DTI/PRI loop (card) being tested must be disabled.

Remote loopback test

The remote self test, also called the external loopback test, checks the integrity of the NTMW04 DTI/PRI through an external T-1 loopback. If the Remote Loopback command (RLBK) is executed at the far end Option11C Compact prior to executing the Remote Self test command (RMST) at the near end, the integrity of the DS-1 facility is tested from end to end.

> ***Note:*** The NTMW04 DTI/PRI channel or loop (card) being tested must be disabled.

Coordinating the tests

1 When a technician at the far end requests a remote loopback on the local Option11C Compact:

- Disable the DCHI (for PRI DCHL or BCHL) using LD 96:
  LD 96

  DIS DCH N

- Disable the NTMW04 DTI/PRI card and activate remote loopback mode using LD 96:

  LD 60

  DISL TMDI x

  ENL RLB x

2 To run the remote self test (external loopback test) through a loopback on the far end Option11C Compact:

- Call a technician at the far end. Ask for remote loopback mode on the facility that is to be tested.
- When loopback mode at the far end is confirmed, disable the DCHI (for PRI DCHL or BCHL) using LD 96:

  LD 96

  DIS DCH N

- Disable the DTI/PRI card and run loopback test using LD 96:

  LD 60

  DISL TMDI x

  ENL RLB x

Note: The Remote Self test (external loopback test) can be run through any loopback that is external to the DTI/PRI card. The loopback can range from a loopback connector plugged into the NTMW37 cable to a Remote Loopback on the far end DTI/PRI, or at any point in between on the DS-1 facility.

Figure 36 shows the relationship between the remote loopback test and the link diagnostic test.

Figure 36
DTI/PRI link diagnostic and remote loopback tests

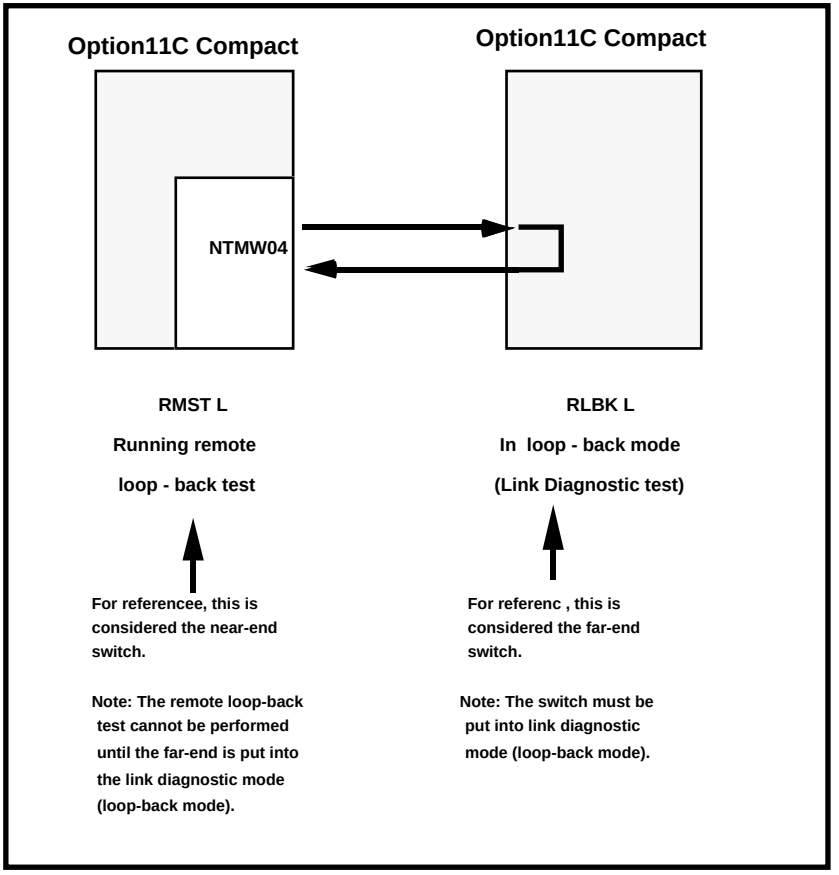

DTI/PRI error detection

Bit error rate

Bit error rate monitoring detects errors in transmission. (See Figure 37). There are two methods of bit error monitoring: bipolar violation tracking and Cyclic Redundancy Check (CRC).

If the D2, D3 or D4 framing format is selected in overlay 17 prompt DLOP, then bipolar violation tracking is implemented. If the Extended Superframe (ESF) format is selected, CRC is implemented.

Bipolar violation (BPV) tracking

In a bipolar pulse stream, pulses alternate in polarity. A bipolar violation has occurred if, after transmission, two pulses of the same polarity are received in succession (this could be caused by an electrical disturbance such as noise).

> ***Note:*** Bipolar 8 Zero Substitution (B8ZS) introduces intentional bipolar violations. The T1 equipment must treat them as such and disregard them. This explains why B8ZS can only be used if all the equipment on the T1 span (end-to-end) supports it. Otherwise the intentional BPVs take the link down.

Figure 37
Bipolar violations

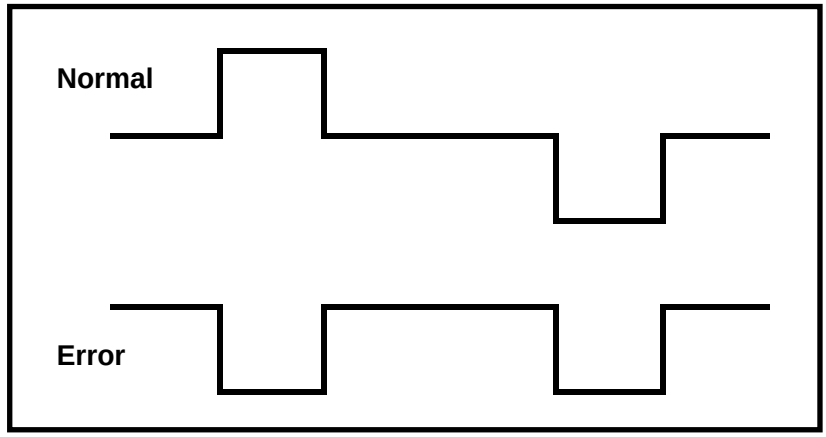

Cyclic Redundancy Check (CRC)

The Extended Superframe Format (ESF) contains a checksum of all data in the frame. The receiving side uses the checksum to verify the data.

The primary difference between BPV and CRC is that bipolar violation tracking indicates errors in the local span, while CRC indicates errors on an end to end span. For example, on a satellite link, BPV only detects errors in the span between the Option11C Compact and the satellite connection. Since CRC traverses the entire span, it indicates an end-to-end bit error rate.

DTI/PRI hardware detects BPV or CRC errors. It sends an overflow (OVFL) message to the Option11C Compact CPU each time 1024 BPV or CRC errors are detected. Running the midnight routines prints the number of overflows and clears the counter.

Bit error rate threshold messages

There are three bit error rate thresholds set in LD 73, using one of two prompts: BIPV or BIPC. When a threshold is reached, a DTA message is produced. (See Figure 38.)

Message	Explanation
DTA011	Bit error rate maintenance threshold has been reached.
DTA012	Bit error rate out of service limit has been reached.
DTA013	Too many bit error rate out of service occurrences in the last 24 hours.

Figure 38
BIPV and BIPC thresholds

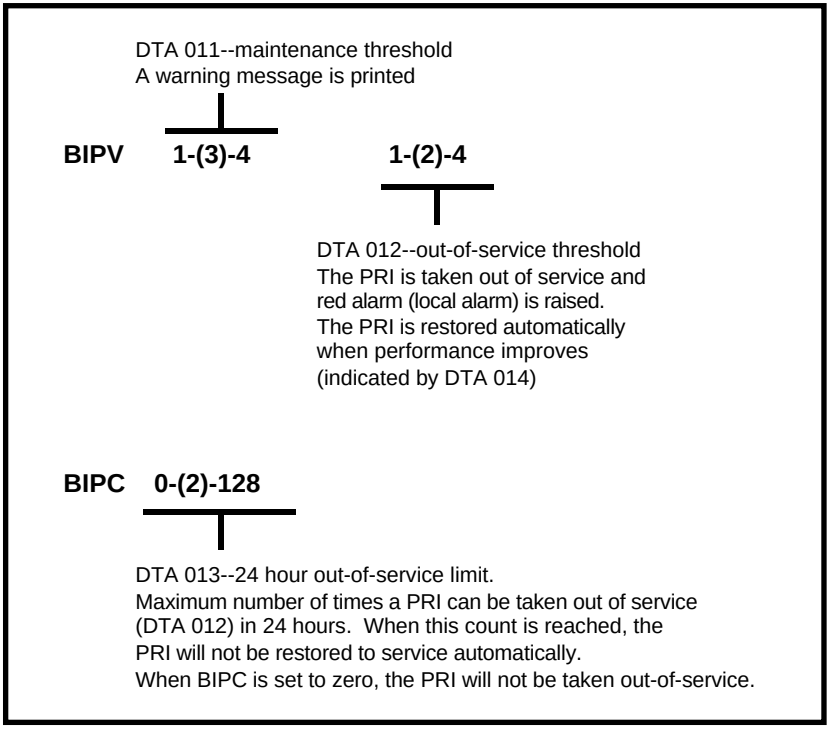

Frame slip

Digital signals must have accurate clock synchronization for data to be interleaved into or extracted from the appropriate timeslot during multiplexing and de-multiplexing operations. A frame slip is defined as the repetition of, or deletion of, the 193 data bits of a DS-1 frame due to a sufficiently large discrepancy in the read and write rates at the buffer (clocks aren't operating at EXACTLY the same speed).

When data bits are written into (added to) a buffer at a slightly *higher* rate than that at which they are being read (emptied), sooner or later the buffer overflows This is a slip-frame deletion.

In the opposite situation, when data bits are written (added) into a buffer at slightly *lower* rate than that at which they are being read (emptied), eventually the buffer runs dry or underflows. This is also a slip-frame repetition.

Either occurrence is called a slip (or a controlled slip). The Option11C Compact PRI/DTI contains a buffer large enough to hold about 2 full DS-1 frames (193 * 2 = 386). It is normally kept half full (1 frame). Slippage has impact on the data being transferred, as is shown in the table below, and all of the degradations shown in the table can be controlled or avoided with proper clock (network) synchronization.

Table 24
Impact of slip on service types

Service	Potential Impact
Encrypted Text	Encryption key must be resent.
Video	Freeze frame for several seconds. Loud pop on audio.
Digital Data	Deletion or repetition of Data. Possible Misframe.
Facsimile	Deletion of 4-8 scan lines. Drop Call.
Voice Band Data	Transmission Errors for 0.01 to 2 s. Drop Call.
Voice	Possible Click

Types of synchronization

Clock synchronization can be either tracking on the primary reference clock or free run (non-tracking). In LD 73 (prompts PREF and SREF), the NTMW04 DTI/PRI card which provides the clock controller circuitry is defined as the primary clock reference.

DTI/PRI hardware detects frame slips in tracking and free run modes. For tracking mode, running the midnight routines prints the number of overflows and clears the counter. For free run mode, running the midnight routines prints the number of frame deletions and repetitions and clears the counters.

Tracking mode

There are two thresholds set in LD 73 as described in the table below (see also Figure 39):

Prompt	Value	Meaning
SRTK	1-(5)-24 1-(30)-3600	Slip rate maintenance (in hours) and out-of-service threshold (per hour). These are the frame slip rate thresholds for the tracking mode. The first value is the maintenance threshold; the elapsed time (in hours) in which 2 frame slips occur (default is 2 slips in 5 hours). The second value is the out-of-service threshold; or the number of slips allowed in one hour (default is 30 slips in 1 hour). When a threshold is reached, a DTA messages is output as follows: DTA015:Frame slip --- tracking --- maintenance limit. DTA016:Frame slip --- tracking --- out of service limit.

Figure 39
Frame slip tracking thresholds

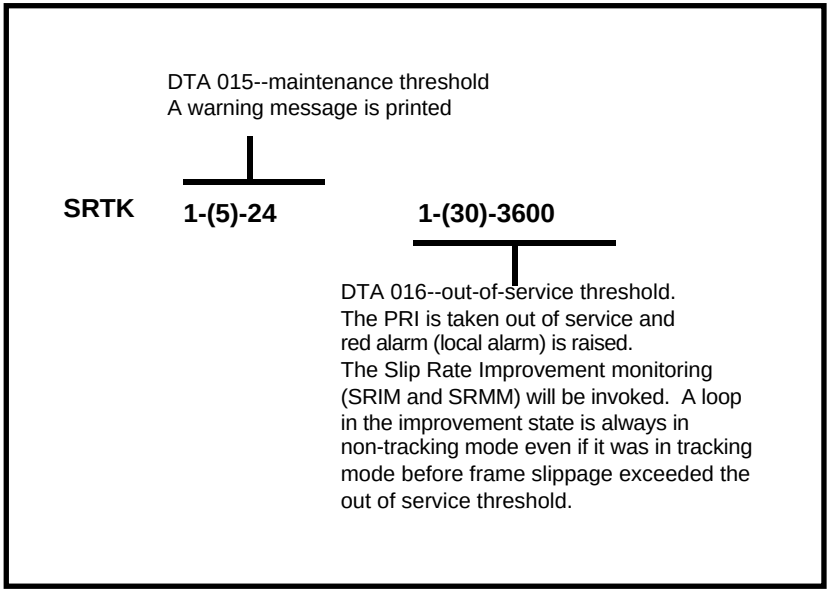

Free run (non-tracking) mode

A maintenance threshold and an out of service threshold are set in LD73 as described below (see Figure 40):

Prompt	Value	Meaning
SRNT	1-(15)-1024 1-(3)-1024	Non-tracking slip rate maintenance and out-of-service thresholds. These are frame slip rate thresholds for the non-tracking mode. The first value is the maintenance threshold in seconds, the amount of time in which 10 slips occur (default is 10 slips in 15 seconds). The second value is the out-of-service threshold in seconds, the amount of time in which 10 slips occur (default is 10 slips in 3 seconds). When these thresholds are reached, DTA messages are output. Related DTA messages are described below. See Figure 40. DTA017:Frame slip --- free run (non-tracking) --- maintenance limit. DTA018:Frame slip --- free run (non-tracking) --- out of service limit.

Figure 40
Frame slip non-tracking thresholds

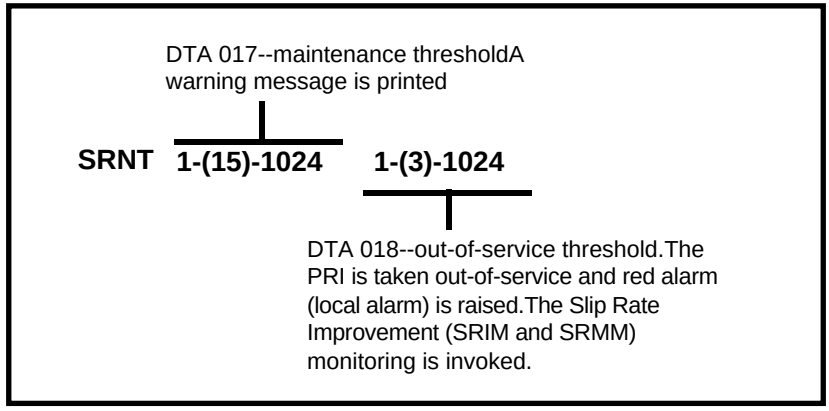

Frame slippage improvement timers

Once the frame slip out-of-service threshold has been reached, the DTI/PRI software will invoke a Slip Rate Improvement mechanism to monitor the slippage and return the DTI/PRI card to service if some criteria has been met. The criteria used to determine that the slip rate has improved enough to return a DTI/PRI card to service is that the maintenance threshold is exceeded less than M (SRMM — default 2) times in N (SRIM — default 1) minutes.

It is important to realize that this monitoring applies to both tracking and non-tracking modes. Note that a DTI/PRI card in the Slip Rate Improvement state is always in non-tracking mode, even if it was in tracking mode before frame slippage exceeded the out-of-service threshold.

There are two thresholds set in LD 73 as described in Figure 41:

Prompt	Value	Meaning
SRIM	(1)-127	Slip Rate Improvement time in minutes. After the tracking or non-tracking mode frame slippage out-of-service threshold is exceeded, the slip rate is monitored for improvement. If the non-tracking maintenance threshold exceeds SRMM or fewer times in the duration of this timer, then the trunks are returned to service. Otherwise, this timer is reset and monitoring continues.
SRMM	1-(2)-127	Slip Rate exceeded maintenance limit. Number of times the Slip Rate exceeds the maintenance limit while waiting for Slip Rate Improvement during the time window specified at the SRIM prompt. While waiting for Slip Rate Improvement one of three DTA messages is output as shown in Figure 41.

Figure 41
Frame slip improvement timers

SRIM (1)-127

DTA 026--frame slip out-of-service limit has been reached while monitoring frame slip improvement. Trunks remain out-of-service, and improvement timer is restarted.

DTA 028--frame slip maintenance limit has been reached while monitoring frame slip improvement. Trunks remain out-of-service, and improvement timer is restarted.

DTA 029-- frame slip improvement timer has expired, Slip Rate Improvement Criteria has been met. Trunks are being returned to service.

SRMM 1-(2)-127

Frame alignment

Loss of frame alignment occurs when the DTI/PRI card stops receiving the framing pattern on the DS-1 byte stream for a pre-defined period of time (3 seconds). See Figures 42 and 43. This condition can occur as a result of the far end of the T1 span going completely out-of service or any other reason resulting in losing the incoming DS-1 pulse stream.

Loss of frame alignment thresholds
DTI/PRI hardware detects out of frame conditions. Running the midnight routines prints the number of occurrences when frame alignment was lost and clears the counters.

There are three frame alignment thresholds set in LD 73. When a maintenance or out of service threshold is reached, a DTA message is output as shown below.

DTA019	frame alignment maintenance limit
DTA020	frame alignment out of service limit

Figure 42
Frame alignment thresholds

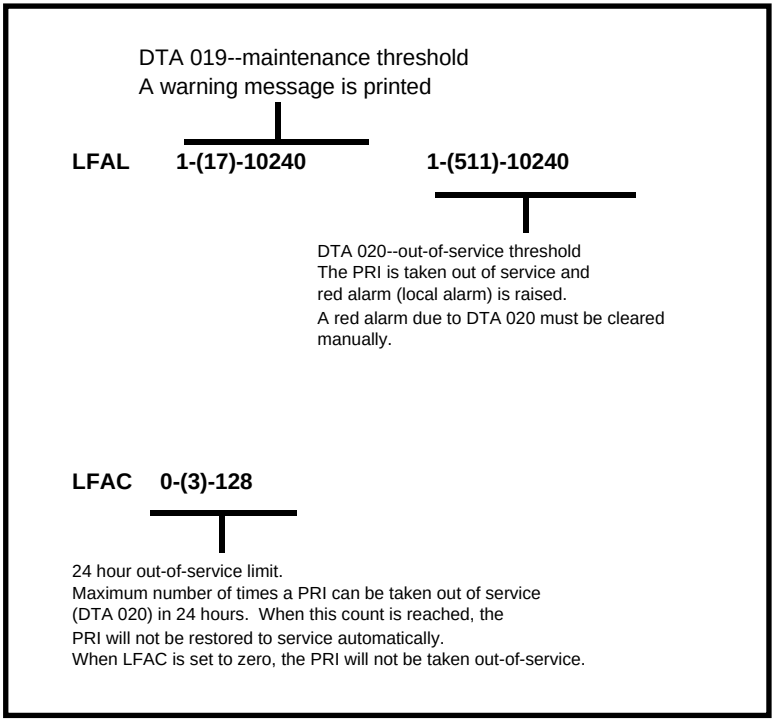

If a loss of frame alignment condition persists for 3 seconds, the affected NTMW04 DTI/PRI card is taken out of service and a red alarm (local alarm) is raised. See Figure 43.

If the loss of frame alignment condition clears at least 15 seconds, the DTI/PRI is automatically restored to service. The following DTA message is generated:

DTA021	loss of frame alignment has persisted for 3 seconds.

Figure 43
Loss of frame alignment

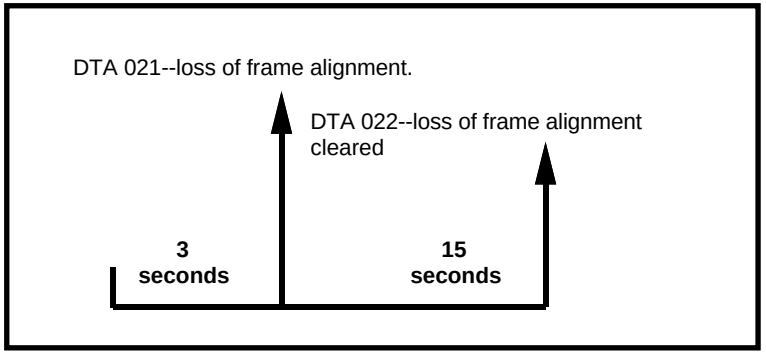

Clock operation

The Option11C Compact system supports a single clock controller that can operate in one of two modes: tracking or non-tracking (also known as free-run).

Tracking mode

In tracking mode, one NTMW04 DTI/PRI card supplies a clock reference to a clock controller. When operating in tracking mode, one NTMW04 DTI/PRI card is defined as the primary reference source for clock synchronization (PREF in LD 73).

There are two stages to clock controller tracking:

— tracking a reference, and

— locked onto a reference.

When tracking a reference, the clock controller uses an algorithm to match its frequency to the frequency of the incoming clock. When the frequencies are very near to being matched, the clock controller is locked onto the reference. The clock controller will make small adjustments to its own frequency until both the incoming and system frequencies correspond.

If the incoming clock reference is stable, the internal clock controller will track it, lock onto it, and match frequencies exactly. Occasionally, however, environmental circumstances can cause the external or internal clocks to drift. When this happens, the internal clock controller will briefly enter the tracking stage.

Replacing the MTMW04 DTI/PRI card

Use the following procedures to replace the NTMW04 DTI/PRI card:

1 If in PRI mode, first S/W disable the associated D-Channel (DCHI) using the following overlay and commands:

LD96 DIS DCH x

(Where x is the DCHI port number that was assigned in LD17).

2 If the Clock Controller is enabled, first S/W disable it using the following overlay and commands:

LD60 DIS CC 0

3 S/W disable the NTMW04 DTI/PRI card as follows:

LD96 DIS TMDI x

(Where x is the card slot number of the NTMW04 DTI/PRI card).

4 Hold the NTMW04 by the lock latch, unlock the latch and slide the card out of the cabinet.

Clocking

Clocking in a Digital World

The Need for Synchronization

When digital signals are being transported over a communication link, the receiving end must operate at the same frequency as the originating end to prevent loss of information. This is referred to as link synchronization.

If both ends of a communication link are not in synchronization, data bit slips will occur and therefore a loss of data will result. In general, accurate timing is very important, but more importantly, synchronized timing is a must for reliable data transfer.

When only two Option 11C Compact systems are interconnected in an isolated private digital network, synchronization can be achieved by operating the two systems in a master/slave mode whereby one system derives its timing from the other. In a network of digital systems, however, slips can be better prevented by forcing all digital systems to use a common reference clock through a network clocking hierarchy.

Synchronization Methods

There are two common methods of maintaining timing coordination between switching systems.

a **Plesiochronous operation**: nodal clocks run independently (free run) at the same nominal frequency. There will be frequency differences between clocks resulting in frame slips (see section “Frame Slips”). The magnitude of frame slips will be directly proportional to the frequency difference. Slips are inevitable but can be minimized by using very stable clocks and elastic stores or buffers. These buffers will be capable of absorbing a certain number of data bits to compensate for slight variances in clock frequencies.

b **Mesochronous operation**: nodal clocks are continuously and automatically locked to an external reference clock. With this method, frame slips can be eliminated if elastic stores are large enough to compensate for transmission variances. Mesochronous operation should be virtually slip free.

Whenever possible, the Option 11C Compact PBX will operate in the Mesochronous mode by configuring the Clock Controller circuit to lock onto an external reference source. The above statement is true unless the Option11C Compact PBX is used as a master in an independent/private network. An independent network has no digital links to a higher Node Category.

In an isolated private network, the Option11C Compact clock controller can operate in free run mode and act as a master clock to be tracked by other Option 11C Compact systems in the private network.

Frame Slip

Digital signals must have accurate clock synchronization for data to be interleaved into or extracted from the appropriate timeslot during multiplexing and de-multiplexing operations. A frame slip is defined as the repetition or deletion of the 193 data bits of a DS-1 frame due to a sufficiently large discrepancy in the read and write rates at the buffer. Frame slips occur when clocks aren't operating at exactly the same speed.

When data bits are written into a buffer at a slightly *higher* rate than that at which they are being read, sooner or later the buffer overflows. This is a slip-frame deletion.

In the opposite situation, when data bits are written into a buffer at a slightly *lower* rate than that at which they are being read, eventually the buffer runs dry or underflows. This is also a slip-frame repetition.

Either occurrence is called a slip or a controlled slip. The Option 11C Compact contains a buffer large enough to hold about 2 full DS-1 frames (193 x 2 = 386). It is normally kept half full (1 frame). Slippage has impact on the data being transferred, as is shown in the table below, and all of the degradations shown in the table can be controlled or avoided with proper clock synchronization. Table 25 shows the impact of slip on service types.

Table 25
Impact of slip on service types

Service	Potential Impact
Encrypted Text	Encryption key must be present.
Video	Freeze frame for several seconds. Loud pop on audio.
Digital Data	Deletion or repetition of Data. Possible Misframe.
Facsimile	Deletion of 4-8 scan lines. Drop Call.
Voice Band Data	Transmission Errors for 0.01 to 2 s. Drop Call.
Voice	Possible Click

Guidelines

Some key points to keep in mind when designing Network Synchronization:

— Where possible, the Master Clock Source should always be from a Node Category/Stratum with higher clock accuracy. For example, when the PBX is connected to the CO, the CO will be the Master and the PBX will be the Slave.

— The source should not itself be in free-run unless it is operating in a fully independent network where the source acts as a Master (see “Plesiochronous operation” in this chapter).

— When connecting two PBXs together with no CO connections, the most reliable PBX should be the Master. Reliability here refers to Dual CPU/Dual Clock, battery backup, and Stratum level of Clock Controller.

— Avoid timing loops. A timing loop occurs when a clock is using as its reference frequency a signal that is traceable to the output of that same clock. The formation of such a closed timing loop will lead to frequency instability and should be avoided. Timing loops are sometimes unavoidable on the secondary clock reference source.

— Ensure all central offices/PBX links which are used as clock references have a traceable path back to the same stratum 1 clock source.

The following figures will help illustrate some of the basic concepts to achieve stable clocking.

Figure 44
Isolated Private Network

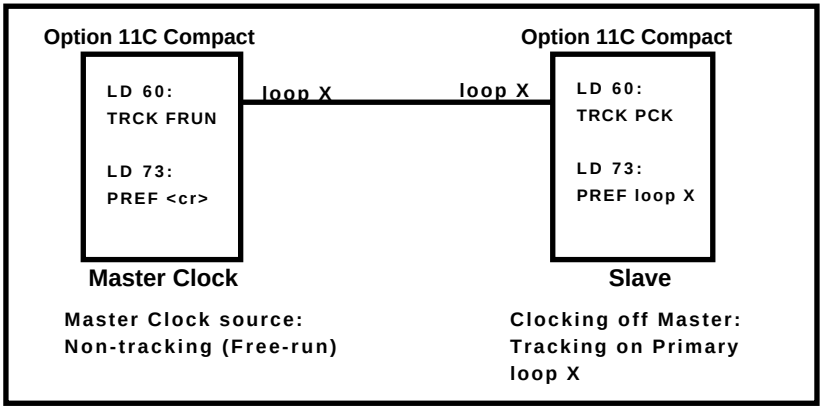

Figure 45
Clocking Hierarchy referenced to a Public Network Master Clock

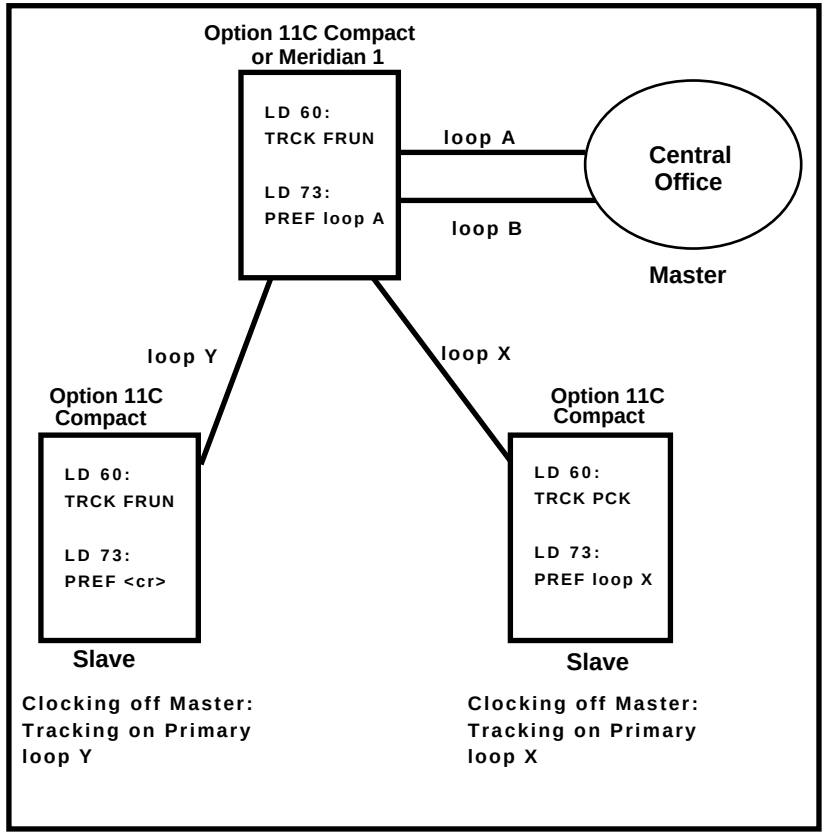

Comments:

— For TIE lines between PBXs facilitated by a central office, clocking is derived from the PBX, not the CO.

Appendix A - BARS/NARS

Introduction

This appendix describes the Basic Alternate Route Selection (BARS) and Network Alternate Route Selection (NARS) features for on a Option11C Compact system. BARS/NARS is considered one package. For more information on the BARS/NARS package, contact a Northern Telecom representative.

The BARS or NARS feature enables a customer with a number of switches in different locations to "Tie together" these switches to create a private telecommunications network (See Figure 46). When implemented, the BARS or NARS feature functions to direct a call from a switch in one geographical location to a switch in any other geographical location in a cost-efficient and easy-to-use manner by:

— eliminating long, complex dialing plans and replacing them with an abbreviated Uniform dialing plan (UDP) common to all switches which are part of the network.

— providing a means of controlling the number and type of trunks that are available to each network caller, and a method of controlling the time of day that access to a trunk (or group of trunks) is allowed.

— selecting automatically the least-cost trunk route available to complete a call between network switches.

— providing uniform network access to stations served directly at a Option11C Compact node and stations served at Option 11C Compact mains or conventional mains (see Note on page 224) connected to a Option11C Compact node by Tie trunks

— providing the call originator with the option to either accept or refuse call completion over an expensive trunk, if less expensive trunks are not currently available.

— providing optional queuing features which enable a call originator (when all trunks are busy) to either remain off-hook until a trunk becomes idle, or hang-up and receive a callback from the Option 11C Compact when a trunk becomes idle.

Note: Terminology used in this publication is based on the following definition of switch types:

Option 11C Compact ESN Node
An Option 11C Compact equipped with the NARS or BARS feature.

Option 11C Compact ESN Main
An Option 11C Compact connected by Tie trunks to an Option 11C Compact node and equipped with the Network Signaling (NSIG) feature package. (The connected Option 11C Compact Node must also be equipped with the NSIG feature package.)

Conventional Main
An Option 11C Compact switch connected by Tie trunks to an Option 11C Compact node, but not equipped with the Network Signaling feature package. Conventional Main also applies to any other switch type (for example, step-by-step) connected by Tie trunks to an Option 11C Compact node.

Whether the BARS or NARS feature is used depends on the number and placement of switches within the customer's private network, as well as the volume of traffic the network is to carry. NARS has the ability to translate location codes while BARS translates codes used for on-net dialing as special numbers. Refer to the section on-net to off-net automatic overflow.

When used in large widely-dispersed applications, NARS forms an integral part of Northern Telecom's Electronic Switched Network (ESN) product. For more complete details, refer to *Electronic Switched Network description* (309-3001-100).

Other optional features that enhance the capabilities of BARS or NARS (Off-Hook Queuing, Network Authorization Codes, for example) are mentioned briefly in this publication. The following publications describe these optional features:

Network Queuing description (552-2751-101)

Coordinated Dialing Plan description (553-2751-102)

Basic and Network Authorization Code description (553-2751-103)

Figure 46
A typical private telecommunications network

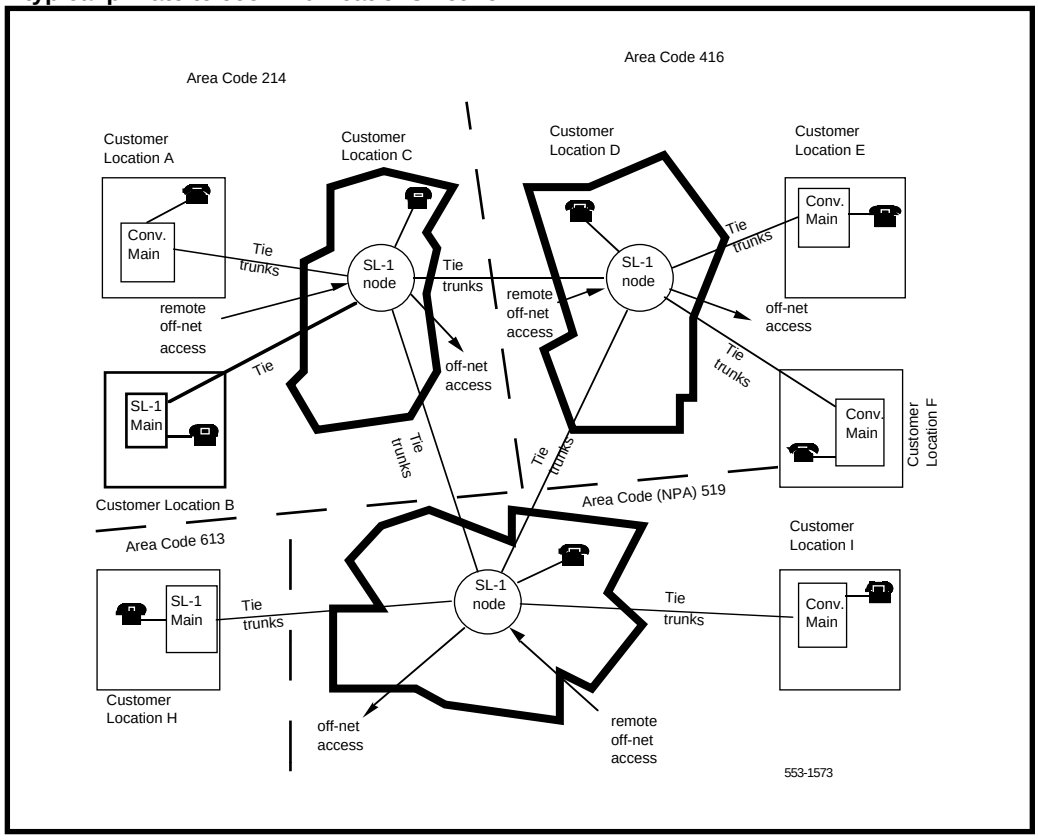

Network class of service

Network Class of Service (NCOS) is an integral part of the BARS and NARS features at an Option 11C Compact node, and of the Network Signaling feature at an Option 11C Compact ESN Main.

NCOS provides the means to control:

— which trunk routes are eligible to be accessed to attempt call completion

— whether or not queuing is offered to a call originator

— whether or not the call originator receives a warning tone when an expensive trunk is selected to complete a call

— whether or not the user is allowed to access the Network Speed Call feature.

Table 26 summarizes the NCOS and other parameters for Option 11C Compact nodes and mains.

Table 26
Summary of node and Main parameters Summary of node and Main parameters (continued)

Parameter (Note 1)	**BARS node**	**NARS node**	**ESN main**
NCOS Groups (Note 2)	0 - 7 (0-99)	0 - 15 (0-99)	0 - 15 (0-99)
Facility Restriction Levels	0 - 7	0 - 7	0 - 7
Digit Manipulation Tables	1 - 255	1 - 255	—
Route Lists	0 - 127	0 - 255	—
Route List Entries	0 - 7 (0-31)	0 - 7 (0-31)	
FCAS Tables	1 - 127	1 - 255	-—
SDR Tables	0 - 255	0 - 511	—
SDRR^{5+} Tables	0 - 255	0 - 511	—
TOD Schedules	0 - 7	0 - 7	—

Note 1: FCAS = Free Calling Area Screening SDR = Supplemental Digit Restriction SDRR = Supplemental Digit Restriction/Recognition TOD = Time-Of-Day
Note 2: If the NARS and BARS features are equipped in the same switch but for different customers, the highest parameter values apply to that switch. For example, if one customer has NARS and another customer has BARS, the NARS parameters apply to the BARS customer.
Note 3: If the New Flexible Code Restriction (NFCR) feature is equipped in conjunction with BARS or CDP, the number of available NCOSs is 8.

Once each NCOS group is defined through Option 11C Compact service change, then line, trunk, and attendant groups are assigned to the NCOS group which best serves its requirements. The NCOS group to which each line, trunk, or attendant group is assigned is independent of the assigned Option 11C Compact class of service. Tie trunks incoming from Option 11C Compact mains or conventional mains are also assigned to an NCOS group (at the node) which determines their level of access to the network facilities at the node.

Facility Restriction Level

Included as part of each NCOS group is a Facility Restriction Level (FRL) number which ranges from 0 (low-privilege) to 7 (high-privilege). The FRL is used by the Option 11C Compact software to determine the alternate route selection choices available for network call attempts by users within an NCOS group.

Example

A user assigned to an NCOS group with an FRL of 3 would be allowed access only to alternate route selection choices that have an assigned FRL of 3 or less; access to route choices with an FRL greater than 3 would be denied. Thus, by assigning low-privilege users to an NCOS group with a low FRL, and high-privilege users to an NCOS group with a higher FRL, the customer can control worker/management access to all network facilities.

Expensive Route Warning Tone

In some instances, expensive trunk routes may be assigned an FRL that would enable them to be accessed by certain network users. When this occurs, the originator of the call may be sent an optional Expensive Route Warning Tone (ERWT). (ERWT eligibility is defined through the user's assigned NCOS group.) NCOS groups must have CBQ type A in order to hear ERWT.

The ERWT alerts the user that expensive facilities have been selected to complete the call. The caller may opt to either accept or reject call completion over the expensive facilities. The caller must make this choice within a customer-programmable time. Refer to Option 11C Compact service change programs in the *Option11C Compact input/output guide*, specifically LD86 the ERDT timer, for more information.

Queuing features

Eligibility for the Off-Hook Queuing (OHQ) or Call-Back Queuing (CBQ) features is defined through the user's assigned NCOS group.

Basic/Network Alternate Route Selection

The NARS and BARS features provide comprehensive and flexible networking packages that can be configured to satisfy the specific requirements of a customer's private network. The BARS or NARS packages provide benefits to users through simplified dialing plans and reduced communications costs. Prime elements of the BARS or NARS features are:

— Simple network access codes

— Uniform dialing plan

— Dialing transparency

— Automatic least-cost routing

— Time-of-Day (TOD) routing

— Network controls through Network Class of Service (NCOS), Traveling Class of Service (TCOS), FRL, and regular Option 11C Compact COS

— Routing control through NCOS alterations based on a special TOD schedule

— 1-4 digit translation and 1-7 digit restriction

— 1-4 digit translation, 1-7 digit restriction, and 1-7 digit recognition

— 1-11 digit translation, restriction, recognition

— Free Calling Area Screening (FCAS)

— Expensive Route Warning Tone (ERWT)

Uniform dialing plan

The Uniform dialing plan (UDP) is not a feature of BARS or NARS, but is an operation that enables users at an Option 11C Compact node, Option 11C Compact main, or conventional main to dial all calls in a uniform manner regardless of the location of the calling party or the route which the call will take. LOCs are programmed as NXXs or SPNs.

UDP for on-net calling

An on-net call is one which terminates at a customer-owned location. To reach any on-net location, the user dials the NARS or BARS on-net access code (AC1), followed by seven digits. The dialing format for this call would be:

AC1 * LOC + XXXX (For NARS)

AC1 * SPN + XXXX (For BARS)

Legend:

AC1 = the 1-digit or 2-digit NARS on-net access code

* = NARS dial tone (optional)

LOC = a 3-digit location code assigned for the destination location

SPN = a 3-digit code assigned for the destination location

XXXX = the extension number of the party to be reached at the destination location.

Each switch which is part of the BARS or NARS network is referenced by a unique three-digit location (LOC) SPN or NXX code assigned at the Option 11C Compact Node. There must be no conflict between the location code number assigned for a switch and Number Plan Area (NPA) codes.

A customer-owned location can be either physically connected to the network (by means of private trunk facilities) or virtually connected to the network (by means of public facilities). If a location is virtually connected to the network, the dialed LOC code is translated and converted by the Option 11C Compact Node into the public number for the virtual location; for example, the Direct Distance Dialing (DDD) number or the Direct Inward Dialing (DID) number. Using digit manipulation for BARS, an SPN can be changed into the public network LDN.

Figure 47 illustrates a private network with a typical UDP. A user at LOC 776 (customer location I) wishing to call extension number 3283 at LOC 777 (customer location H) would first dial 8 (AC1), pause for NARS dial tone (optional), then dial 777-3283. A user at any other customer location that is part of the network would dial these same numbers to reach extension 3283.

UDP for off-net calling

An off-net call is one that does not terminate at a customer-owned location, even though some on-net facilities may be used to complete a portion of the call routing. Referring to Figure 47, a call would be termed off-net if a user at LOC 776 called a station number associated with CO 758-XXXX in the foreign area code 214.

Tables 27 and 28 list the dialing formats for the various types of NARS and BARS UDP calls respectively.

Figure 47
Example of a network with a typical NARS Uniform dialing plan

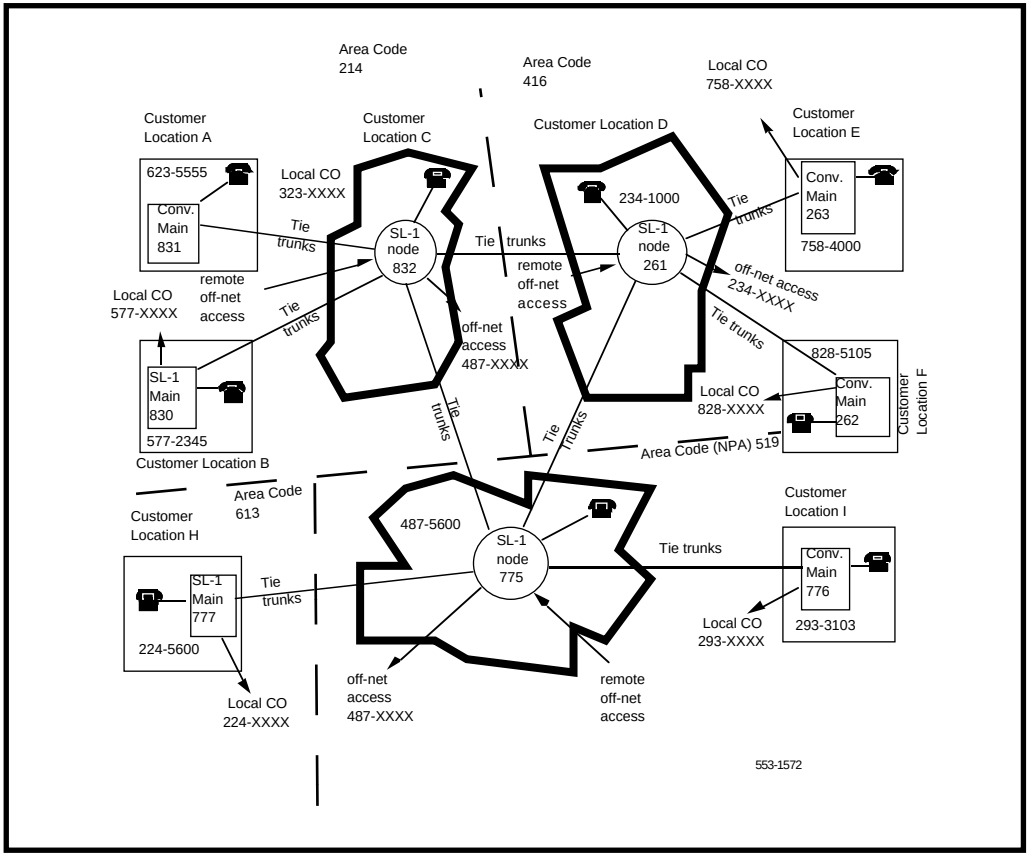

Table 27
Dialing formats for NARS UDP callsDialing formats for NARS UDP calls (continued)

Call type	Dialing format	Code capacity
On-Net (Notes 1, 2, and 3)	AC1 * LOC + XXXX	640
DDD FNPA (Note 1)	AC1 * 1 + NPA + NXX + XXXX	160
Network Speed Call	AC1 * LA + LN	1 - nn
Operator-assisted DDD	AC1 * 0 + NPA + NXX + XXXX	160
International DDD	AC1 * 011 + CC + NN	99
Operator-assisted International DDD	AC1 * 01 + CC + NN	99
DDD HNPA (Note 1)	AC1 or AC2 * 1 + NXX + XXXX	1
DDD Operator	AC2 * 0	1
Local Calls (Note 1)	AC2 * NXX + XXXX	640
Special Local Services	AC2 * SPN	8
Toll-free Calls	AC2 * 800 + NXX + XXXX	1
Toll-free Calls (Note 1)	AC2 * 1 + 800 + NXX + XXXX	1
Toll Special Numbers	AC2 * 900 + NXX + XXXX	1
Toll Special Numbers (Note 1)	AC2 * 1 + 900 + NXX + XXXX	1

Note 1: If 1+ Dialing is used, the On-Net and Local Calls code capacities are increased to 800 and 792 respectively.

Note 2: If the code 1XX is reserved for future 1+ Dialing use, and not for Network Speed Call codes, then the location code capacity will be reduced to 639 if a three-digit Network Speed Call (NSC) code is used, 632 if a two-digit NSC code is used, or 560 if a one-digit NSC code is used.

Note 3: When 1+ Dialing is used, Network Speed Call access will be in the form of 2XX-9XX as a subset of the location codes utilized in the UDP. The location code capacity will be reduced to 799 if a three-digit NSC code is used, 792 if a two-digit NSC code is used, or 720 if a one-digit NSC code is used.

Note 4: See following page for legend of acronyms and dialing format abbreviations.

- Continued -

Legend	
AC1	Access code for on-net, long distance and Network Speed Calls. Typically the digit "8" but can be either one or two digits in length.
AC2	Access code for local calls. Typically the digit "9" but can be either one or two digits in length.
*	Symbol meaning NARS dial tone (optional).
NPA	Numbering Plan Area (NPA) code. Any number of the form N0X or N1X.
HNPA	Home Numbering Plan Area (HNPA) code. Any number of the form N0X or N1X.
FNPA	Foreign Numbering Plan Area (FNPA) code. Any number of the form N0X or N1X.
CC	Country code. Any one, two, or three digits from 2 to 9.
NN	National Number. Depends on national dialing plan; maximum 12 digits including the Country Code.
N	Any of the digits from 2 to 9.
X	Any of the digits from 0 to 9.
LA	List access code. Any one, two, or three digits from 0 to 9.
LN	List element number. Any one, two, or three digits from 0 to 9 and up to a maximum of 1000 element numbers.
LOC	Three-digit location code for each UDP network location.
NXX	Local Exchange Code.
XXXX	Four-digit directory (extension) number.
SPN	Special numbers for example, 411, 611 or may be XXXX.

Table 28
Dialing formats for BARS calls

Call type	Dialing format
On-Net	(1) AC1 * SPN + XXXX (2) AC1 * NXX + XXXX
DDD FNPA	AC1 * 1 + NPA + NXX + XXXX
Operator-assisted DDD	AC1 * 0 + NPA + NXX + XXXX
International DDD	AC1 * 011 + CC + NN
Operator-assisted International DDD	AC1 * 01 + CC + NN
DDD HNPA (if applicable)	(1) AC1 * 1 + NXX + XXXX (2) AC1 * 1 + NPA + NXX-XXXX (see note)
DDD Operator	AC1 * 0
Local Calls	AC1 * NXX + XXXX
Special Local Services	AC1 * 411, 611 etc.
Toll-free Calls	AC1 * 1 + 800 or 1 + 900 + NXX + XXXX
Note: 1 + dialing is optional; you can simply enter *1 NPA.*	
Legend	
AC1	Access code for on-net, long distance and Network Speed Calls. Typically the digit "9" but can be either one or two digits in length.
*	Symbol meaning wait for BARS dial tone (optional).
NPA	Numbering Plan Area (NPA) code. Any number of the form N0X or N1X.
HNPA	Home Numbering Plan Area (HNPA) code. Any number of the form N0X or N1X.
FNPA	Foreign Numbering Plan Area (FNPA) code. Any number of the form N0X or N1X.
CC	Country code. Any one, two, or three digits from 2 to 9.
SPN	Special Number. Code used to identify other office locations on the network, or a number such as 411 or 611.
NN	National Number. Depends on national dialing plan; maximum 12 digits including the Country Code.
N	Any of the digits from 2 to 9.
X	Any of the digits from 0 to 9.

BARS access code

Long distance calls and calls to distant company locations ("on-network" calls) from the Option 11C Compact Node are made by dialing the BARS access code (AC1) followed by the desired number. The BARS access code (AC1) is typically the digit 8, but is a customer defined one or two-digit number.

There can be no conflict between the BARS access code and any other part of the dialing plan at the node. Dial tone may or may not be provided to a caller after the BARS access code is dialed at the option of the customer.

Dialing the BARS AC1 triggers the BARS software to perform the call-processing and routing required for call completion. This is accomplished by means of a network translation table associated with the BARS access code. Normal Option 11C Compact translation is used for all other call type; local or off-network calls made by dialing the digit 9.

NARS access codes

To access NARS, the user dials either one of the two customer defined NARS access codes: AC1 or AC2. These access codes are typically 8 for on-net and long distance calls (AC1); and 9 for off-net and local calls (AC2). However, any one-digit or two-digit access codes can be used, provided that AC1 is different from AC2 and there is no conflict with any other part of the dialing plan. Dial tone may or may not be provided to a caller after either NARS access code is dialed, at the option of the customer.

Dialing either of the NARS access codes triggers the NARS software to perform the call-processing and routing required for call completion. This is accomplished by means of network translation tables. There is a network translation table associated with each NARS access code. This translation mechanism is used to implement the NARS Uniform dialing plan for private networks.

Network translation

The normal Option 11C Compact digit translator reads the dialed network access code, determines if the call is to be processed by BARS or NARS, and selects the appropriate Network Translation (See Table 29). BARS or NARS translation determines the method to be used to process the call, refers to Supplementary Digit Restriction and Recognition tables if required, and applies digit restriction or recognition where it is specified. The result of translation is to invoke either route selection with a specified route list, standard call blocking, queuing, or internal recognition.

Only one Route List Index is used for routing NPA/NXX/SPN/LOC codes. In a network with multiple switches sharing DID numbers within the same NXX, Coordinated Dialing Plan is needed to route the calls properly.

11-digit BARS or NARS translation

With 11-digit translation, the ESN BARS or NARS translation capabilities are expanded from four digits to a maximum of 11 digits for route selection. This means more digits are translated and therefore make similar codes translate differently. This increases the flexibility for network routing, including International calls. For example, NXX1363 becomes 13634, or 13635. More than one code can be handled by the same route list.

By allowing translation of more than four leading digits, unique unconflicted routing to a destination is possible. More than one Route List can exist for each specific code of a type. For example, the NXX 727 could only translate into one Route List previously. With 11-digit translation, as many Route Lists as are needed to eliminate code conflict or achieve network requirements can be defined by extending translation deeper into the dialed code. Table 29 compares the number of digits that can be translated prior to 11-digit translation with present capabilities.

Table 29
Digit translation

Type	prior to 11-digit translation	with 11-digit translation
LOC	3	3 - 7
HLOC	3	3 - 7
NPA	3- 4	3 - 11
HNPA	3- 4	3 - 11
NXX	3- 4	3 - 8
SPN	1- 4	1- 11

Dialing transparency

Extending network access to an Option 11C Compact Main or Conventional Main is accomplished by forming a single Tie trunk access group from the Main to the Node. Users at Main switches access the trunk group to the Node by dialing the BARS or NARS on-net access code (AC1). The Option 11C Compact Node is arranged to insert the digit(s) for AC1 on each incoming call from the Main, thus enabling access to the network facilities of the Node in a transparent fashion. Local calling is arranged through conventional dial "9" CO trunks at the Main.

> ***Note:*** If an Option 11C Compact node replaces a tandem switch in a Tandem Tie Trunk Network (TTTN), other tandem switches in the network can "tandem through" the Option 11C Compact Node using the same access codes as before. This requires that there be no conflicts between the access codes for the TTTN trunks and the dialing plan implemented at the Option11C Compact Node.

Automatic least-cost routing

For each network call translated at an Option 11C Compact node, BARS or NARS selects a route from a list of up to eight outgoing alternate routes to complete the call. A list of alternate routes to a particular destination is called a route list and each route specified in the list is termed an entry. Any combination of trunks; for example, Central Office (CO), Foreign Exchange (FX), or Tie can be specified in a route list.

Note 1: BARS or NARS can select a route from a list of up to 32 outgoing alternate routes.

Note 2: Use of the Bandwidth Controller (DCA System 9000) improves the capacity of T1 based tandem networks. Its dynamic alternate routing capability can independently choose the optimum path for a voice or data call. However, it will be necessary to coordinate the Bandwidth Controller routing lists with the ESN routing lists.

Typically, the first entries (routes) in a route list are the less expensive routes to a destination and comprise the initial set (I set) of routes in the list. The remaining routes in the list (if any) are the more expensive routes to a destination and comprise the extended set of routes in the list. An initial set marker, defined through service change, determines which routes comprise the initial route set. Refer to *Electronic Switched Network description* (309-3001-100) for more information on I set and extended set routes.

An Option 11C Compact Node equipped with NARS can accommodate 256 (0-255) route lists. An Option 11C Compact node equipped with BARS can accommodate 128 (0-127) route lists.

Associated with each entry in a route list is information relevant to:

— the route number (0-511) (depending on the release)

— the minimum FRL required for access

— the time-of-day the route can be accessed

— whether or not queuing (OHQ or CBQ) is allowed on the route

— whether or not the route is to receive ERWT treatment

— a digit manipulation table index number

— a Free Calling Area Screening (FCAS) table index number

— activation/deactivation of conversion from an on-net number to an off-net number (NARS only)

Route eligibility

BARS or NARS translates the number dialed (1-11 digits) after an access code into a route list, and searches sequentially the routes in the list for an available route. Route eligibility for a given call is based on the caller's NCOS, the NCOS-defined FRL, the current time of day, and Option 11C Compact COS.

Because each entry in a route list has a minimum FRL required for access and all network users are assigned an FRL through their NCOS, the network communications manager can restrict the type of calls allowed to particular users. For example, if the minimum FRL for all calls is 1, except for special local services numbers which are assigned an FRL of 0, then a user assigned to an NCOS group with an FRL of 0 would only be able to make calls to the special numbers. In addition, the communications manager can restrict the use of high-cost facilities by assigning a high FRL to the expensive routes in a route list and a lower FRL to a user's NCOS.

Digit manipulation

As mentioned previously, any trunk type can be specified in a route list. However, when certain trunk types are accessed, the digits dialed by the user must be manipulated to conform to the dialing requirements of the trunk. To do this, BARS or NARS uses digit manipulation tables to modify the dialed digits. There can be a maximum of 256 digit manipulation tables, each referenced by a digit manipulation index number, defined at each Option 11C Compact Node. Digit manipulation can delete up to 15 leading digits, and insert up to 20 leading digits.

Example

A user at customer location I (See Figure 47) dials 8-613-596-9084 to reach an off-net station in the 613 NPA associated with customer location H. At the Option 11C Compact Node, BARS or NARS selects the appropriate route list for call completion to NPA 613 and finds that the only available route to that NPA is a local CO trunk which requires the insertion of the leading digit "1" for long distance calls. The route list entry for this route specifies a digit manipulation index number (0-255). “0” means no digit manipulation is required. BARS or NARS references the digit manipulation table indicated by the index number, deletes digits as specified in the table (none in this case), and inserts the required digits ("1" in this case), and completes the call on this route.

Time-of-Day routing

BARS or NARS provides for up to eight (0-7) Time-of-Day (TOD) schedules. Each entry (route) in a route list is assigned to the TOD schedule which specifies the hour(s) that the particular entry can be accessed. Thus, based on the current time of day, the most cost-effective route alternatives can be specified. A typical TOD schedule is shown in Table 30.

Table 30
A typical TOD schedule

TOD schedule	Time period
2	00:00 to 07:44 17:30 to 23:59
1	07:45 to 08:59 12:00 to 13:14 16:00 to 17:29
0	09:00 to 11:59 13:15 to 15:59
Note 1: A TOD schedule can be associated with any number of arbitrarily selected 15-minute periods. However, any one 15-minute period can appear only in one TOD schedule.	
Note 2: Normally, the user does not define 0, but lets the Option 11C Compact define it by calculating times of day not mentioned in schedules 1-7.	

Based on the TOD schedule shown in Table 30, a route list entry assigned to TOD schedule 2 would be accessed only between the hours of 00:00 to 07:44 and 17:30 to 23:59. Access to the route at any other time would be denied. TOD schedules can be turned "on" or "off" through Option 11C Compact service change, as traffic conditions warrant. A TOD schedule is turned on for an entry by turning off all other TOD. An *X* beside the schedule number turns that number off.

Flexible ESN “0” Routing

Flexible ESN “0” Routing allows routing of calls on different routes based on a few predefined non-leftwise unique dialing sequences. This means that each entry in the table cannot match the leftmost potion of any other entry in the table. For example, if “123” is an entry in the table, then no other entry may begin with “123.”

The ESN translation table will allow any or all of the following non-leftwise unique numbers (along with their associated route list) to be entered into the ESN translation table:

— 0

— 00

— 01

— 011

Flexible ESN “0” Routing is part of the existing BARS (57) and NARS (58) packages and has no interaction with other features besides these. Since NARS has two translation tables, two Flexible ESN “0” Routing datablocks will be included in NARS. This means that a call could be configured to route in two different ways.

This feature is applicable to all route types and network types that are supported by ESN. For information on the appropriate prompts and responses in service change (LD90), refer to the *Option11C Compact input/output guide*.

Automatic on-net to off-net overflow

If all on-net facilities to a location are busy or blocked, NARS can convert a dialed NARS UDP number to the Listed Directory Number (LDN) or DID number of the destination location, and use off-net facilities to complete the call. If the Option 11C Compact Node is equipped with BARS, digit manipulation tables can be used to convert the dialed number to the off-net number (LDN or DID) of the destination location.

Example

A user at customer location I (See Figure 48) dials 8-777-3283 to reach a party with extension number 3283 at customer location H. At the Option 11C Compact Node, NARS translates the dialed LOC number (777) into a route list, and searches all eligible routes in the list. Failing to find an available Tie trunk route, NARS then seizes local off-net facilities and, to complete the call, outpulses one of two possibilities:

— 224-3283, if customer location H is arranged for DID

— 224-5600, if customer location H is not arranged for DID

Multiple DID Office Code Screening

Multiple DID Office Code Screening is an enhancement to the On-Net to Off-Net Overflow capability of the NARS feature. This enhancement permits on-net calls which are routed through the public network using on-net to off-net conversion, to terminate at any DN which has been defined in the Location Code data block of memory. For each LOC defined, Multiple DID Office Code Screening will:

— allow the definition of multiple NXX codes,

— allow the definition of multiple ranges of DN within each NXX.

The following arrangements of multiple office codes (NXX) and multiple DN ranges are possible:

— single office code with a single DN range

— single office code with multiple DN ranges

— multiple office codes with a single DN range

— multiple office codes with multiple DN ranges

Requirements

— The number of digits in each DID range must be 4.

— A maximum of 20 DID ranges may be defined per location code regardless of the number of office codes.

Incoming trunk group exclusion

Incoming Trunk Group Exclusion is an enhancement to the BARS or NARS feature which blocks calls from Option 11C Compact and Conventional Main users who use the network to reach destinations in the home NPA, or other restricted NPAs, NXXs, LOCs and SPNs. When the feature is configured, users cannot use the network to circumvent the restrictions. Instead, they are forced to dial off-net from their own switch and become subject to whatever restrictions are imposed at the Main.

Standard call blocking is applied on outgoing calls to specific NPAs, NXXs, SPNs or LOCs at the Option 11C Compact Node if the call is from a specific incoming trunk group. Two advantages result.

— Loopback routing through the caller's home switch (home NPA, NXX) is prevented. Calls which should have been made off-net from the caller's home switch are blocked outgoing at the node.

— Main users are prevented from using BARS or NARS to make calls to certain NPA, NXX, SPN or LOC that they are restricted from making at the home switch.

Sets of restricted trunk routes to specific NPAs, NXXs, SPNs or LOCs are defined in Option 11C Compact Service Change. There is one Incoming Trunk Group Exclusion Index (maximum 255) for each defined NPA, NXX, SPN or LOC. Each index points to an Incoming Trunk Group Exclusion (ITGE) table. A maximum of 128 restricted routes can be defined in each ITGE table. Incoming Trunk Group Exclusion provides full 10-digit restriction for NPA and SPN codes, seven-digit restriction for NXX codes and three-digit restriction for LOC codes. The code itself may be restricted also.

When a call is received, BARS or NARS tests to see if the dialed code is a restricted type (Supplemental Digit Restriction). If it is, BARS or NARS checks whether or not it has an ITGE restriction and if there is an ITEI number (1-255) associated with it. If an ITEI is defined, the ITGE table corresponding to the dialed code is searched. If the incoming trunk route is a member of the ITGE, the BARS or NARS process is terminated and the call is blocked. Otherwise, call processing continues.

Off-net number recognition

Off-Net Number Recognition eliminates the need for using two extra CO trunks, when a subscriber, using the private network, dials a DID or DDD number that terminates at a BARS or NARS location. Calls are routed directly to the dialed DN (DID calls) or to the LDN (DDD calls), rather than being switched from the terminating switch to the CO and back again.

Off-net number recognition parameters for local and remote DDD and DID locations are defined by the customer in the Network Translation tables and Supplemental Digit Recognition/Restriction blocks (SDRR).

With 11-Digit Translation, up to 11 digits can be defined in the following table.

Table 31
SDRR

Call type	Network translation table (number of digits)	SDRR block (number of digits)
NPA	3 - 10	1 to (10 - N)
1NPA	4 - 11	1 to (11 - N)
NXX	3 - 7	1 to (7 - N)
1NXX	4 - 8	1 to (8 - N)
SPN	1 - 11	1 to (10 - N)
ISPN	1 - 4	1 to (11 - N)
Note: The value N is equal to the number of digits defined in the Network Translation table.		

Up to 512 SDRR blocks can be defined for NARS (256 for BARS). Each table can contain up to 64 entries.

Off-Net numbers are recognized at the last intelligent BARS or NARS switch. Translation of the NPA, NXX or SPN identifies the method of treatment for the call. If the data type is SDRR and the index is an SDRR table index, supplemental digit recognition/restriction is applied by comparing the dialed digits with the numbers declared in the SDRR block.

— If no match is found in the SDRR, route selection is called, call processing resumes and the call is routed to the CO of the terminating off-net number.

— If a match is found and the number is in the "denied" block, standard call blocking takes place.

— If a match is found and the number is recognized as a terminating number at the local switch (for example, the last intelligent BARS or NARS switch), the call is terminated at the station DN (DID calls) or at the attendant DN (DDD calls).

— If a match is found and the dialed number is a recognized number terminating at a remote switch, route selection is called, the special digit manipulation takes place and the call is routed directly to the main. DID calls terminate at the dialed station and DDD calls terminate at the attendant DN.

Note: Remote recognition applies to Tie trunks only.

Supplemental digit restriction (release dependent)

Supplemental digit restriction blocks (see Table 32) function as follows:

— block (deny) access to certain telephone numbers

— recognize Off-Net calls dialed to On-Net locations

— prevent routing of calls to the home switch of the originating trunk group by either on-net or off-net facilities.

The customer can also specify through Option 11C Compact service change the treatment that blocked calls receive; for example, overflow tone, intercept to attendant, or recorded announcement.

Table 32
Supplemental digit restriction blocks per NARS or BARS

Network package	maximum
NARS	512
BARS	256

Digit translation / restriction / recognition

BARS and NARS provide a 1-digit through 10-digit (11-digit with 1+ dialing) translation/restriction/recognition capability through the use of network translation tables and Supplemental Restriction/Recognition tables. There are two network translation tables with NARS; one associated with each of the network access codes (AC1 and AC2).

Information contained in the network translation tables is as follows:

— For each NPA entry, excluding the Home NPA (HNPA):

- a route list index number (0-255 with NARS, 0-127 with BARS) that indicates which route list to use in processing a call to this NPA entry
- whether or not there are telephone numbers within this NPA entry to which network calls are to be blocked; for example, “denied”
- whether or not there are telephone numbers within this NPA entry to which network calls are to be blocked because of ITGE restrictions
- whether or not there are numbers under this NPA entry that are to be recognized as DID or DDD codes to an On-Net location
- a list (up to 64) of 1- to 7-digit numbers that follow the NPA and are to be blocked or recognized in this NPA.

— For each NXX entry:

- a route list index number (0-255 with NARS; 0-127 with BARS) that indicates which route list to access in processing a call to this NXX entry
- whether or not there are telephone numbers within this NXX entry to which network calls are to be blocked
- whether or not there are telephone numbers within this NXX entry to which network calls are to be blocked because of ITGE restrictions
- whether or not there are numbers under this NXX entry that are to be recognized as DID or DDD codes to an On-Net location
- a list of up to 64, 1- to 4-digit numbers that follow the NXX and are to be blocked or recognized in this NXX

— For each LOC entry, excluding the Home LOC code (not applicable to a BARS-equipped switch):

- a route list index number (0-255) that indicates which route list to access in processing a call to this LOC entry
- the Listed Directory Number (LDN) to which the LOC entry is to be converted when using off-net DDD facilities
- the range of DID numbers to which the LOC entry can be converted when using DID facilities
- whether or not there are LOC entries to which network calls are to be blocked because of ITGE restrictions

— For each SPN (special number) entry:

- a route list index number (0-255 with NARS; 0-127 with BARS) that indicates which route list to access in processing a call to this SPN
- whether or not there are digits following SPN numbers to which network calls are to be blocked
- whether or not there are SPN numbers to which network calls are to be blocked because of ITGE restrictions
- whether or not there are numbers under this SPN that are to be recognized as DID or DDD codes to an On-Net location
- a list of up to 64, 1 to 7 numbers that are to be blocked or recognized when following the SPN

Figure 48
NARS elements accessed at an Option 11C Compact node to process a network call

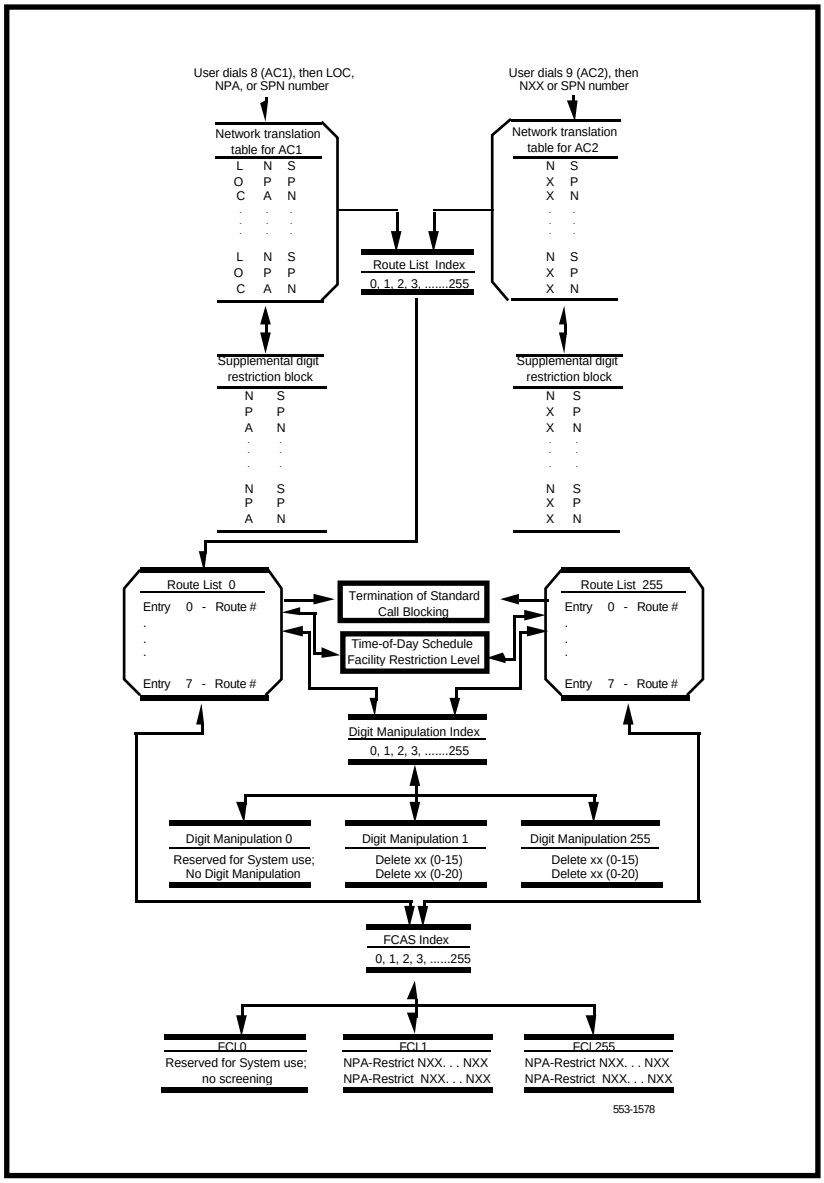

Free Calling Area Screening

Free Calling Area Screening (FCAS) is a BARS or NARS feature which provides the customer with the capability of full six-digit (NPA-NXX) screening to determine the route choice for completion of off-net calls. With FCAS, a customer can allow calls to NXX codes within the "free calling area" surrounding a particular on-net location, and restrict (deny) calls to those NXX codes that would incur long distance charges.

FCAS is implemented in a way similar to the method used for digit manipulation (for example, through FCAS tables). There can be up to 255 FCAS tables defined at an Option 11C Compact node equipped with NARS (BARS can accommodate 127 FCAS tables). Each table can contain up to 15 NPA codes (only 7 NPA codes with BARS). Up to 800 NXX codes can be restricted or allowed within each NPA code. Each FCAS table is referenced by a Free Calling Index (FCI) number (0-255 with NARS, 0-127 with BARS); “FCI = 0” is a system default meaning no Free Calling Area Screening is required. The appropriate FCI number is then assigned to the applicable route list entries.

Whenever a route list entry is being considered for an off-net call (for example, 8-NPA-NXX-XXXX), BARS or NARS checks to see if there is an FCI number (other than “0”) referred to by the entry. If an FCI number other than “0” is defined, the appropriate FCAS table for the dialed NPA is found and used for NXX screening. If the dialed NXX is denied in the table, BARS or NARS will not use the route list entry for call completion, but will continue to search for another eligible route list entry. If the dialed NXX is not denied, or specifically allowed in the table, the route list entry is eligible for the call. Calls to the LDN of a location are screened only if the NPA is included as part of the LDN. NXXs allowed in an FCI table are the only ones allowed for that route list entry.

Expensive Route Warning Tone

This feature enables the network communications manager to select certain users to receive an Expensive Route Warning Tone (ERWT). Eligibility for this tone is based on the user's NCOS. The tone (three 256-ms bursts of 440 Hz) notifies the user that BARS or NARS has selected facilities designated as expensive to complete the call. The user then has the choice of either allowing the call to complete over the expensive facilities, or going on-hook to avoid the increased expense, or queuing on the I set routes. (The user must make this choice within a programmable time of 0 to 10 seconds.) The tones must be activated for the customer group and the expensive route cannot be part of the I set in the route list.

If the call originator is located at an Option 11C Compact node or Option 11C Compact Main and the Ring Again feature is defined for the user and the user is CBQ eligible, then Ring Again may be activated to queue the call.

If the Option 11C Compact Node is equipped for Call Detail Recording (CDR), acceptance of an expensive route after ERWT is received is noted in the CDR record.

BARS or NARS bypass control

A customer can allow selected users to bypass the BARS or NARS feature for call completion between any two locations; for example, two locations which share a high community of interest. To do this, routes and trunks are set up between the two locations, and assigned an access code distinct from the AC1 and AC2 codes used to access BARS or NARS. The normal Option 11C Compact trunk controls, like Trunk Group Access Restriction (TGAR), class of service, and code restriction, are then used to enable access only to the selected users. All other users are denied access to the trunk group, and thus, are forced to use BARS or NARS for all calls.

Network Speed Call

The Network Speed Call (NSC) feature enables a user at an Option 11C Compact node who is normally restricted from making certain types of BARS or NARS calls to make such a call if the destination is a company-approved number defined in a System Speed Call (SSC) list. This feature requires that the System Speed Call feature be equipped, in addition to Network Speed Call. NSC can also be accessed by users at an Option 11C Compact Main or Conventional Main, provided a BARS or NARS access code is used to initiate the call.

Access to the NSC feature is allowed after a NARS or BARS access code is dialed. Upon receipt of BARS or NARS dial tone (optional), the user dials a Network Speed Call access code (one to three digits). The NSC access code must be unique from all LOC, NPA and NXX codes, and special numbers defined in the translator for the BARS or NARS access code.

The NSC access code is associated with a previously defined System Speed Call list (0-253) through service change in the network translation load. If the SCC list has its length (size) changed, the list access code and list number must be deleted and reentered into the NARS translator. Associated with the SSC list is an NCOS number. The NCOS assigned to the SSC list is applied to the call only if the FRL (0-7) is greater than that associated with the call originator's assigned NCOS.

If 1+ Dialing is specified for an NPA, NXX or SPN number in a translator, the digit "1" must not be used as the leading digit for Network Speed Call list codes in that translator.

The user then dials the number of the desired entry (1-1000) in the SSC list. Upon completion of dialing, the digits defined for the list entry are passed to BARS or NARS translation for processing. Route and feature (OHQ, CBQ) eligibility for call completion are based on the NCOS associated with the SSC list, if the FRL of the user's assigned NCOS is lower than that of the list.

Network Call Transfer

This feature improves the operation of the existing Call Transfer (XFER) feature between two Option 11C Compacts when a call is transferred back to the originating switch. The regular XFER feature requires two Tie trunks to complete the call. With Network Call Transfer (NXFER), if the call is transferred back to the originating switch by means of the same Tie trunk group, the originating switch completes the transfer within itself and the Tie trunks are dropped.

> ***Note:*** Both Option 11C Compact switches must be equipped with NSIG and NXFER software for this feature to operate.

The benefits derived from the NXFER feature include:

— minimal use of access Tie lines

— improved transmission performance since Tie lines are not used for the completed connection

— operation of NXFER is the same as for the existing XFER feature.

As shown in Figure 49, the NXFER feature allows station A at one ESN switch (I) to transfer the Tie trunk call from station B (switch II) to a third party, station C (switch II). In addition to NXFER software, NSIG software is needed at both ends of Tie trunk. If the transfer is allowed, stations B and C are connected on switch II and the Tie trunks are dropped (see Figure 51). In comparison, regular Option 11C Compact Call Transfer (XFER) requires two Tie trunks and both switches to transfer and connect stations B and C.

Figure 49
Connection during NXFER

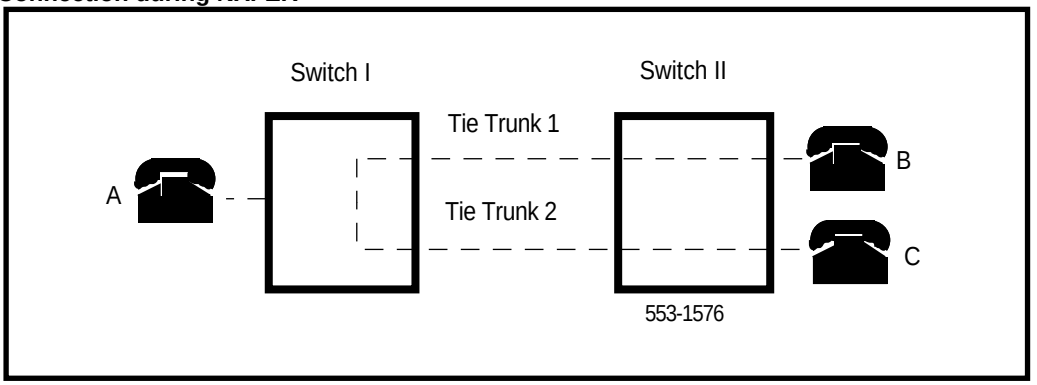

Figure 50
Connection after NXFER

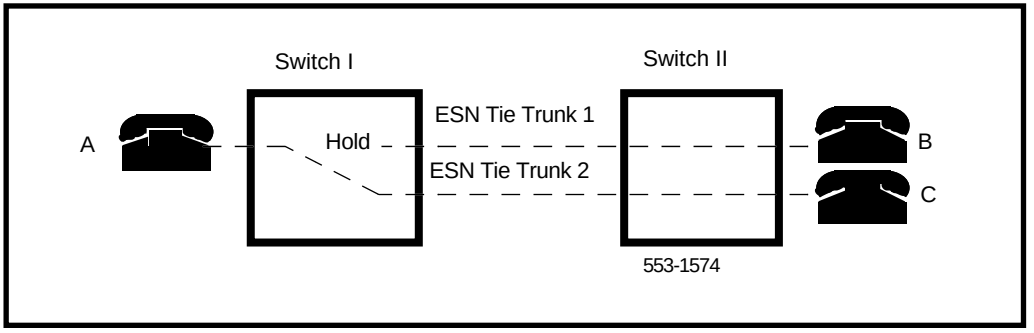

Figure 51
Connection after XFER

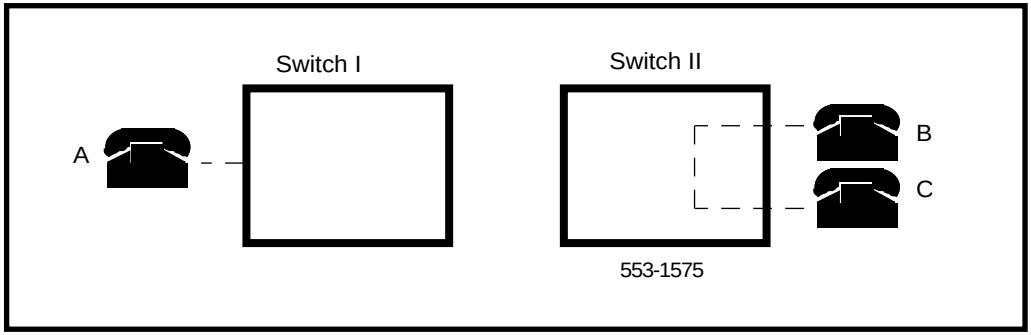

1 + dialing

Translation tables With 1+ dialing, the BARS or NARS translation tables are equipped for 4-digit translation (based on the first 1, 2, 3, or 4 digits), or 11-digit translation, thus allowing BARS or NARS access code for long distance calls. NARS provides two translation tables and BARS provides one. Refer to Table 27 for dialing formats for NARS Uniform dialing plan (UDP) calls and Table 28 for BARS calls.

Code ambiguity The 1+ dialing capability also eliminates ambiguity between identical originating and terminating 3-digit NPA, NXX and LOC codes for BARS or NARS-originated calls. Thus, the BARS or NARS customer can route calls to any NPA, NXX or LOC code that conflicts with one of his 3-digit codes.

Limitation If 1+ dialing is specified for an NPA, NXX or SPN number in a translator, the digit "1" must not be used as the leading digit for Network Speed Call list codes in that translator.

Network control

Network control is an enhancement to the Network Class of Service (NCOS) feature that extends NCOS controls to users located at an Option 11C Compact Main. Network control requires that the Option 11C Compact Main and serving Option 11C Compact Node be equipped with the NSIG feature. The Option 11C Compact Main must also be equipped with the NCOS feature.

Option 11C Compact Main NCOS

Users (lines, trunks, attendants) at an Option 11C Compact Main are assigned an NCOS that is used to determine their level of access to network facilities at the serving Option 11C Compact Node. When a user at an Option 11C Compact Main initiates a call to (or through) an Option 11C Compact node, the user's assigned NCOS or TCOS, depending on Tie trunk settings (ESN or ESN2, for example), can be transmitted.

If the user's NCOS is transmitted to the serving node and the node is equipped with BARS, only NCOS 0 through 7 can be assigned at the node. Therefore, only NCOS 0 through 7 should be assigned at the ESN Main even though an ESN Main equipped with NSIG can have an NCOS of 0 through 15. If the node is equipped with NARS, then an NCOS of 0 through 15 can be assigned both at the node and at the ESN Main.

The transmitted NCOS or TCOS overrides the NCOS or FRL assigned to the incoming Tie trunk group at the node, and is used to determine the user's eligibility for network resources/features at the Option 11C Compact Node. Thus, a user at an Option 11C Compact Main has the same network-access capabilities as a user at the Option 11C Compact Node who is assigned the same NCOS.

> ***Note:*** If the user at the Option 11C Compact Main enters a valid authorization code prior to placing a BARS or NARS call, the NCOS associated with the authorization code is transmitted to the Option 11C Compact Node in place of the user's assigned NCOS.

Calls from a Conventional Main to the Option 11C Compact Node are controlled by the NCOS assigned to the incoming trunk group at the Option 11C Compact Node, since the Conventional Main has no NSIG.

Option 11C Compact node TCOS

Network Control at an Option 11C Compact node can provide a Traveling Class of Service (TCOS) mechanism. TCOS controls route access and Off-Hook Queuing (OHQ) eligibility for calls placed to (or through) another Option 11C Compact node or an associated Option 11C Compact Main. It also enables the Option 11C Compact Node to interface with switches that are part of an Electronic Tie Network (ETN) as long as the SIGO setting on the Tie trunk route is set for ETN at both ends. Nodes can send NCOS if SIGO is set for ESN2, for example, at both ends of the Tie trunk group.

The Traveling Class of Service is, in effect, the Facility Restrictions Level (FRL) of a user's assigned NCOS. When a user at an Option 11C Compact node initiates a call to another Option 11C Compact Node (or an Option 11C Compact ESN Main), the TCOS (for example, the FRL of the user's assigned NCOS) is transmitted to the other Option 11C Compact Node. At the receiving Option 11C Compact Node, the TCOS (0-7) replaces the FRL of the NCOS assigned to the incoming trunk group. Route access and OHQ eligibility for the call are, therefore, based on the NCOS of the incoming trunk group with the modified FRL (for example, TCOS).

> ***Note:*** The Network Control (NCTL) data block (LD87) is used to define OHQ eligibility on a per FRL (TCOS) basis (for example, if FRL 4 is defined as OHQ eligible, then all users with an NCOS with an FRL of 4 are eligible for OHQ on calls placed to another Option 11C Compact Node or to an associated Option 11C Compact Main).

If a user at an Option 11C Compact Main or conventional main initiates a call that tandems through the serving Option 11C Compact node to another Option 11C Compact node or Option 11C Compact Main, TCOS applies to the call as if the call originated at the serving Option 11C Compact node.

Compatibility with ETN switches

The Option 11C Compact TCOS is equivalent to the Traveling Class Mark (TCM) used at ETN switches. (See Technical Publication 42709, "Tie Trunk Signaling Compatibility for Connecting to a DIMENSION PBX", July 1979.)

When a seven-digit/ten-digit UDP call or a DSC (Distant Steering Code) (CDP) call is made from an Option 11C Compact node to an ETN switch, the dialed digits together with the TCOS number (0-7) are sent to the connected ETN switch. At the ETN switch, the TCOS number received from the Option 11C Compact Node is used as a TCM to determine route access and off-hook queuing eligibility at the ETN switch.

Similarly, when a call is made from an ETN switch to an Option 11C Compact node, the dialed digits together with the TCM number (0-7) are sent to the connected Option 11C Compact node. The Option 11C Compact node interprets the received TCM number as a TCOS number. The received TCM (for example, TCOS) replaces the FRL of the NCOS assigned to the incoming trunk group from the ETN switch. This new FRL (for example, TCM) is then used to determine route access and off-hook queuing eligibility for the call. However, if a DSC (CDP) call is terminated on an SL-1 switch as a Local Steering Code (LSC) call, the TCOS value transmitted by the connected switch will not be collected and saved by this switch.

Network signaling

The Network Signaling (NSIG) feature provides the required signaling protocol to interface Option 11C Compact nodes with Option 11C Compact ESN Mains, Option 11C Compact nodes with other Option 11C Compact nodes, Option 11C Compact nodes with conventional mains, and Option 11C Compact nodes with Electronic Tie Network (ETN) switches.

When equipped with NSIG, an Option 11C Compact Conventional Main is enhanced and becomes an ESN Main. When callers at an ESN Main place calls through a node or nodes with NSIG, their NCOS or TCOS travel with the call and are interpreted at other Option 11C Compact switches that are equipped with NSIG. The Tie trunk settings determine and control the operation of this feature.

When the NSIG feature is equipped at a switch, options are available (route data block, LD16) to define the signaling arrangements between that switch and any other switch that may be connected to it by means of Tie trunks. These options define what call information is to be transmitted to a connected switch and what call information is to be received from a connected switch. The option selected depends on the type of connected switch (node, main, conventional main, ETN) and the options (for example, CCBQ, CBQCM) that are available to the connected switch.

The signaling options are: STD (standard), ESN, ESN2, ESN3, ESN5 (Electronic Switched Network), and ETN (Electronic Tie Network).

STD Arranges the Tie trunk group for transmission/reception of the called number between switches. Sends outpulsed digits.

ESN Arranges the Tie trunk group for transmission/reception of the call type, NCOS/TCOS, and called number between switches.

ESN2 Arranges the Tie group as described for ESN. Used unless switch has NXFER or Satellite Link Control (SAT).

ESN3 Arranges the Tie group as described for ESN and is required on systems equipped with the Network Call Transfer (NXFER) or Satellite Link Control features.

ESN5 Arranges the Tie trunk group as described for ESN; needed with DTI.

ETN Arranges the Tie trunk group for transmission/reception of the called number and TCOS/TCM between switches and is used when connected to an ETN switch. Sends outpulsed digits and TCOS.

Application

Following is a description of how these options would be applied to accommodate the different switch types that can be connected to an Option 11C Compact Main or Option 11C Compact Node that is equipped with the NSIG feature.

Option 11C Compact Node An Option 11C Compact Node can be connected by means of Tie trunks to: another Option 11C Compact Node, an Option 11C Compact Main, a Conventional Main, and/or an ETN Switch.

— If the Option 11C Compact Node connects to another Option 11C Compact Node, both ends of the connecting Tie trunk group are defined with the ETN option (called number plus TCOS/TCM), ESN2, ESN3, or ESN5.

— If the Option 11C Compact Node connects to an Option 11C Compact Main, both ends of the connecting Tie trunk group are defined with the ESN option (call type plus NCOS/TCOS plus called number).

— If the Option 11C Compact Node connects to a Conventional Main, the node-end of the Tie trunk group is defined with the STD option (called number).

— If the Option 11C Compact Node connects to an ETN switch, the node-end of the Tie trunk group is defined with the ETN option (called number plus TCOS-TCM).

Option 11C Compact ESN Main An Option 11C Compact Main can be connected by means of Tie trunks to an Option 11C Compact node and satellite switches.

— For connection to an Option 11C Compact node, both ends of the connecting Tie trunk group are defined with the ESN option (call type plus NCOS/TCOS plus called number).

— If there are satellite switches connected to the Option 11C CompactOption 11C Compact Main, the main-end of the Tie trunk groups from the satellite switches are defined with the STD option (called number).

Requirements

The following requirements apply:

— As Option 11C Compact Main can connect to only one Option 11C Compact node, both switches must be equipped with the NSIG feature for NSIG-related features.

— Tie trunks between Option 11C Compact nodes and Option 11C Compact mains must be arranged for DTMF sending/receiving and wink-start operation.

— Option 11C Compact Node compatibility with ETN switches is limited to seven-digit on-network, ten-digit off-network and DSC (CDP) calls.

Satellite Link Control

Tandem trunk calls, when connected through more than one communications satellite trunk, are subject to transmission distortion due to propagation to and from communications satellites. The Satellite Link Control feature ensures that the configuration of a call does not include more than one communications satellite trunk.

Requirements

— This feature applies to ESN network calls (BARS or NARS/CDP) only.

— ESN Proprietary Signaling (NSIG) is required among ESN switches.

— Routes which receive digits from satellites or send digits to satellites have to be marked as SATELLITE routes for this feature to operate.

Example

When accessing an SCC, the Option 11C Compact TD is instructed to look for one of the following tones:

— Busy or overflow tone

— SCC dial tone or regular dial tone

— Ringback tone

Simultaneously a timer is started whose value is an approximation of the period in which ringback tone is normally received. When the timer expires prior to a response from the Option 11C Compact TD, a status request message is sent to the Option 11C Compact TD by software. The response from the Option 11C Compact TD indicates that a tone has been detected but is not yet identified. Based on the sequence in which tones are checked, the software assumes the tone under investigation is ringback tone and can continue the SCC call processing.

Routing control

The Routing Control feature provides a mechanism for changing a user's network-access capabilities when a special TOD schedule is in effect, or when an extended TOD is in effect, or when the user presses a Routing Control key on the console.

NCOS map

With the NARS or BARS feature, TOD schedule 7 is the special TOD schedule. Associated with the special TOD schedule is a Network Class of Service (NCOS) map. The NCOS map lists all NCOS numbers. Associated with each listed NCOS is an alternate NCOS number (greater than, equal to, or smaller than) that replaces the original NCOS number when the special TOD schedule is in effect. Table 33 illustrates a typical NCOS map.

Table 33
A typical NCOS map for special TOD schedule 7

Original NCOS	Alternate NCOS (Note)	Original NCOS	Alternate NCOS (Note)
0	0	8	2
1	0	9	3
2	0	10	3
3	1	11	4
4	1	12	4
5	2	13	5
6	2	14	5
7	2	15	5

Note: When TOD schedule 7 is in effect, the alternate NCOS replaces the user's original NCOS.

Invoking Routing Control

The alternate NCOS numbers associated with special TOD schedule 7 are normally invoked when the time specified for TOD schedule 7 corresponds to the time in the Option 11C Compact system clock. Additionally, the alternate NCOS numbers can be scheduled for implementation (through Option 11C Compact service change) for the full 24-hour period of specified days of the week. This capability enables network-access capabilities to be changed automatically on weekends or company holidays.

The Option 11C Compact attendant can also manually invoke the special TOD schedule through use of a routing control (RTC) key on the console. Pressing the RTC key lights the associated lamp, and invokes the special TOD schedule. To deactivate routing control, the RTC key is pressed again. The associated lamp goes dark and normal TOD schedules are once again in effect.

> ***Note:*** Authorization code can be used to override the restrictions imposed through routing control. If a user enters a valid Authorization code (AUTH), the NCOS number associated with the AUTH is applied for the duration of the call.

Network traffic measurements

The Network Traffic (NTRF) feature provides traffic measurement data related to network performance and network traffic at each Option 11C Compact Node and Option 11C Compact Main. Effective use of this data enables the network communications manager to assess the effectiveness of the network, and to identify specific areas of network operation where improvements are warranted.

Areas of network operation that are measured include NCOS, OHQ, CBQ, and routing.

TFN001 routing measurements

The routing measurements provide data related to route list utilization. A route list is a list of alternate trunk routes which are identified through interpretation of the dialed number. For each defined route list, these measurements show:

— how often the list was used

— which routes in the list were used

— the number of calls that were unsuccessful in completing a route list selection or connection

— queuing (OHQ and CBQ) information

These data comprise both the usage and average duration of each call against the route list. Data is output only for route lists upon which calls were attempted during the traffic study interval.

OHQ measurements

The OHQ measurements are associated with route lists, NCOS, and incoming trunk groups. OHQ enables a user to wait off-hook for a network facility to become available. The network communications manager can control the conditions for, and the duration of, the wait. The measurements present both the usage and average duration if the OHQ feature. This data comprises part of the routing measurements.

CBQ measurements

The CBQ measurements are associated with route lists, NCOS, and incoming trunk groups. If the system cannot select a route, the caller may opt to have the system establish the call at a later time when a route becomes available. The measurements indicate usage and the length of time a caller waits for an established call. The communications manager can control the conditions for CBQ and the advancement of a call within the queue. This data comprises part of the routing measurements.

TFN002 NCOS measurements

The network class of service (assigned through service change) indicates the network facilities available to the user. Traffic measurements are accumulated for each NCOS and indicate the grade of service (queuing and blocking delay, for example) provided by the system. The communications manager can change the NCOS if a grade of service is inappropriate for a user category, the definition of the NCOS is inaccurate, or the routing parameters need updating.

TFN003 incoming trunk group measurements

These measurements relate to the incremental traffic that was imposed on the incoming trunk groups by network queuing features (for example, OHQ, CBQ, CCBQ, CBQCM).

The measurements show:

— how often the incoming trunk group was offered OHQ

— the average time in the OHQ

— how often the incoming trunk group was offered CCBQ or CBQCM, and the number of acceptances

— the average time in CCBQ or CBQCM

— how often an access line was blocked when attempting a CCBQ or CBQCM callback

— how often CCBQ or CBQCM callbacks were not answered or were canceled

BARS implementation

This section provides the procedures necessary to configure Basic Alternate Route Selection (BARS). Only the service change information for BARS is shown here. For a complete discussion of prompts and responses, see *Option11C Compact input/output guide*. The following procedure shows the steps that must be performed to correctly implement your BARS system.

Procedure 1: Implementing BARS

1 Gather data for each NCOS group (LD87)

2 Gather data to define BARS feature parameters (LD86)

3 Gather data for each Digit Manipulation index (LD86)

4 Gather data for each Route list associated with a Digit Manipulation table (LD86)

5 Gather data for each Incoming Trunk Group Exclusion List (LD86)

6 Gather BARS translation data (LD90)

7 Gather data to configure a Conventional Main for Off-Net Number Recognition (LD16)

8 Gather data to assign a Network Class of Service group number to a list of items (LDs 10, 12, 14, 24, 88)

9 Enter data into the database

Configuring BARS

Step 1: Gather data for each NCOS group. Access LD87

REQ	NEW, CHG, OUT	Create, change, or remove data
CUST	0	Customer number
FEAT	NCTL	Network control
NCOS	0-7 0-99	NCOS group to be added, changed, or removed
FRL	0-7	Facility restriction level
RWTA	Yes, (No)	Expensive route warning tone

Step 2: Gather data to define BARS feature parameters. Access LD86

REQ	NEW, CHG, OUT	Create, change, or remove data
CUST	0	Customer number
FEAT	ESN	Electronic Switched Network data block
MXSD	0-512	Maximum number of supplemental digit restriction blocks
MXIX	0-127	Maximum number of incoming trunk group exclusion tables that can be defined
MXDM	0-256	Maximum number of digit manipulation tables
MXRL	0-128	Maximum number of route lists
AC1	xx	One- or two-digit BARS access code one
DLTN	No, (Yes)	Dial tone after dialing AC1 or AC2
ERWT	No, (Yes)	Expensive route warning tone is not (is) provided
ERDT	0-(6)-10	Time in seconds that a user has to accept or reject an expensive route after ERWT is given; default is 6 s; range is in 2-second intervals
TODS	x hh mm hh mm	Start and end time-of-day schedules; BARS or NARS = 0-7 x = schedule number hh = hour mm = minutes

TGAR	Yes, (No)	Check for Trunk Group Access Restrictions Yes = examine TGAR/TARG when call is placed No = ignore TGAR/TARG when call is placed

Step 3: Gather data for each Digit Manipulation index (DGT). Access LD86

REQ	NEW, CHG, OUT	Create, change, or remove data
CUST	0	Customer number
FEAT	DGT	Digit manipulation index
DMI	1-255	Digit manipulation table index (see note below)
DEL	(0)-15	Number of leading digits to be deleted from the dialed number; default is 0
INST	x...x	Up to 24 leading digits to be inserted
Note: The maximum number of Digit manipulation tables is defined by prompt MXDM		

Step 4: Gather data for each Route List associated with A DGT. Access LD86

REQ	NEW, CHG, OUT	Create, change, or remove data
CUST	0	Customer number
FEAT	RLB	Route list data block
RLI	0-127	Route list index number
ENTR	0-7 0-99	Route list entry number
RTNO	0-511	Route number associated with the index
TDET	Yes, (No)	Tone detector is (is not) used
TYPE	TIE, (CC1), CC2	TIE = Tone detector for on-net calls (CC1) = Tone detector for Special Common Carrier, (SCC) Type 1 CC2 = Tone detector for Special Common Carrier, (SCC) Type 2
TONE	DIAL, (SCC)	Type of tone expected from SCC DIAL = normal dial tone SCC = SCC dial tone

REQ	NEW, CHG, OUT	Create, change, or remove data
TOD	0-7 X0-7	Time-of-Day schedule associated with the entry Turn off a time-of-day schedule
EXP	Yes, (No)	Entry is (is not) classed as expensive
FRL	(0)-7	Minimum Facility Restriction Level a user must have to access the entry
DMI	(0)-255	Index number of the digit manipulation table to be used for the entry; default is 0, no digit manipulation required
FCI	1-127	Free calling area screening table index number (FCAS) (0) = no FCAS required
OHQ	Yes, (No)	Off Hook Queuing is (is not) allowed on the entry
CBQ	Yes, (No)	Call Back Queuing is (is not) allowed on the entry
ISET	(0)-32	Number of entries in the initial route set
MFRL	(MIN), 0-7	Minimum FRL used to determine autocode prompting

Step 5: Gather data for each Incoming Trunk Group Exclusion Index (ITGE). Access LD86

REQ	NEW, CHG, OUT	Create, change, or remove data
CUST	0	Customer number
FEAT	ITGE	Incoming trunk group exclusion data block
ITEI	1-127	Incoming trunk group exclusion index number; if REQ was “OUT” all route entries defined for the entered index are removed
	<return>	Return to REQ prompt
RTNO	0-511	Route number associated with index; precede with an X to delete an existing route
	<return>	Return to REQ prompt

Step 6: Gather BARS translation data. Access LD90

REQ	NEW, CHG, OUT	Create, change, or remove data
CUST	0	Customer number
FEAT	NET	Network translation tables
TRAN	AC1, AC2, SUM	Access code 1, 2, or summary tables

REQ	NEW, CHG, OUT	Create, change, or remove data
TYPE	LOC HNPA NPA HLOC NXX SPN NXCL	Location code Home NPA translation code Number plan area translation code Home location code Central Office translation code Special Number translation code Speed call
	<return>	Return to REQ
The following prompt occurs if TYPE is LOC:		
LOC	x...x	Location code (3 digits) or extended LOC (3 to 7)
RLI	0-255	Route list index
ITEI	(0)-255	Incoming trunk group exclusion index
LDN	xx...xx	Up to ten-digit listed directory number including NPA
DID	Yes, (No)	This location arranged for DID
MNXX	Yes, (No)	Multiple NXX codes and ranges
SAVE	1-4	Number of trailing digits to be saved in dialed extension number; must be 4 if MNXX = Yes
OFFC	xxx	NXX of the DID number; prompted if MNXX = Yes
RNGE	0-9999 0-9999	Bottom and top of range of DID numbers
The following prompt occurs if TYPE is HNPA:		
HNPA	xxx	Home NPA
The following prompts occur if TYPE is NPA:		
NPA	xxx, xxx yyy	Area code translation, extended NPA code translation
RLI	0-255	Route list index
SDRR	aaa	Type of supplemental restriction or recognition
DMI	1-255	Digit manipulation table index
DENY	x...x	Number to be denied within the HNPA, NPA, NXX, SPN, or SDRR

REQ	NEW, CHG, OUT	Create, change, or remove data
LDID	x...x	Local DID number recognized within the HNPA, NPA, NXX, or SPN. The maximum number of digits allowed is 10-m (11-m for 1 + dialing).
LDDD	x...x	Local DDD number recognized within the HNPA, NPA, NXX, or SPN. The maximum number of digits allowed is 10-m (11-m for 1 + dialing).
DID	x...x	Remote DID number recognized within the HNPA, NPA, NXX, or SPN. The maximum number of digits allowed is 10-m (11-m for 1 + dialing).
DDD	x...x	Remote DDD number recognized within the HNPA, NPA, NXX, or SPN. The maximum number of digits allowed is 10-m (11-m for 1 + dialing).
ITED	x...x	Incoming trunk group exclusion codes for HNPA, NPA, NXX, or SPN. The maximum number of digits allowed is 7-m.
ITEI	x...x	Incoming trunk group exclusion index
Legend: m = the number of digits entered for the prompt NPA X = a command used to clear a recognized xxx code <return> = A return after each subprompt takes you back to SDRR		
The following prompts appear if TYPE is NXX		
NXX	xxx, xxx yyy	Office code translation, extended NXX codes translation
RLI	0-255	Route list index
SDRR	aaa	Type of supplemental restriction or recognition
DMI	1-255	Digit manipulation table index
DENY	x...x	Number to be denied within the HNPA, NPA, NXX, SPN, or SDRR. The maximum number of digits allowed is 7-m.
LDID	x...x	Local DID number recognized within the HNPA, NPA, NXX, or SPN
LDDD	x...x	Local DDD number recognized within the HNPA, NPA, NXX, or SPN

REQ	NEW, CHG, OUT	Create, change, or remove data
DID	x...x	Remote DID number recognized within the HNPA, NPA, NXX, or SPN
DDD	x...x	Remote DDD number recognized within the HNPA, NPA, NXX, or SPN
ITED	x...x	Incoming trunk group exclusion codes for HNPA, NPA, NXX, or SPN
ITEI	(0)-255	Incoming trunk group exclusion index
The following prompts appear if TYPE is SPN:		
SPN	xxxx xxxx x..	Special number translation
RLI	0-255	Route list index
SDRR	aaa	Type of supplemental restriction or recognition
DMI	1-255	Digit manipulation table index
DENY	x...x	Number to be denied within the HNPA, NPA, NXX, SPN, or SDRR
LDID	x...x	Local DID number recognized within the HNPA, NPA, NXX, or SPN
LDDD	x...x	Local DDD number recognized within the HNPA, NPA, NXX, or SPN
DID	x...x	Remote DID number recognized within the HNPA, NPA, NXX, or SPN
DDD	x...x	Remote DDD number recognized within the HNPA, NPA, NXX, or SPN
ITED	x...x	Incoming trunk group exclusion codes for HNPA, NPA, NXX, or SPN
ITEI	(0)-255	Incoming trunk group exclusion index
The following prompts appear if TYPE is NSCL:		
NSCC	xxx	One- to three-digit network speed call access code
SSCL	0-4095	System speed call list number

REQ	NEW, CHG, OUT	Create, change, or remove data
The following prompts appear if TYPE is NSCL:		
NSCC	xxx	One- to three-digit network speed call access code
SSCL	0-4095	System speed call list number
The following prompts appear if TYPE is NSCL:		
NSCC	xxx	One- to three-digit network speed call access code

Step 7: Gather data to configure a Conventional Main for Off-Net Number Recognition. Access LD16

REQ	NEW, CHG	Add or change a route
TYPE	RDB	Route data block
CUST	0-99	Customer number
ROUTE	0-511	Route number
TKTP	TIE	Tie trunk
• • •		
CNVT	Yes, (No)	Route to conventional switch (prompted if the response to TKTP is Tie)
DDMI	(0)-127	Digit manipulation index (prompted if the response to CNVT is Yes)
ATDN	xxxx	Attendant DN of conventional main (prompted if the response to CVNT is Yes)
Note: If the DN expansion package is equipped, the attendant DN can have up to 7 digits.; otherwise, only 4 digits can be entered.		

The following procedure involves several load programs. In all cases, the prompt is NCOS; the range is 0-99.

Step 8: Gather data to assign a Network Class of Service group number to a list of items

Gather data to assign a Network Class of Service group number to each of the following items:

— 500/2500 sets (LD10)

— Option 11C Compact telephones (LD11)

— Attendant consoles (LD12)

— Trunks (LD14)

— Direct Inward System Access directory number (LD24)

— Authorization code (LD88)

Step 9: Enter data into the database

The final step in configuring Basic Alternate Route Selection is to enter the data gathered into the database:

1 Login.

2 Load the appropriate load program.

3 Enter data requested by prompts until REQ prompt returns.

4 More data to be added/removed?

Yes = go to Step 2

No = perform data dump

Note: A data dump takes approximately 3 minutes to complete. If large amounts of data are being added, perform a data dump periodically. This ensures that entered data is not lost should a system reload occur.

5 Print data (respond with PRT to prompt REQ) and verify against data forms.

6 Corrections required?

Yes = go to Step 2

No = Refer to 553-2YY1-230 and perform applicable tests.

NARS implementation

This section provides the procedures necessary to configure Network Alternate Route Selection (NARS). Only the service change information for NARS is shown here. For a complete discussion of prompts and responses, see *Option11C Compact input/output guide*. The following procedure shows the steps that must be performed to correctly implement your NARS system.

Procedure 1: Implementing NARS

1 Gather data for each NCOS group (LD87)

2 Gather data to define NARS feature parameters (LD86)

3 Gather data for each Digit Manipulation index (LD86)

4 Gather data for each Route list associated with a Digit Manipulation table (LD86)

5 Gather data for each Incoming Trunk Group Exclusion List (LD86)

6 Gather NARS translation data (LD90)

7 Gather data to configure a Conventional Main for Off-Net Number Recognition (LD16)

8 Gather data to assign a Network Class of Service group number to a list of items (LDs 10, 12, 14, 24, 88)

9 Enter data into the database

Configuring NARS

Step 1: Gather data for each NCOS group. Access LD87

REQ	NEW, CHG, OUT	Create, change, or remove data
CUST	0	Customer number
FEAT	NCTL	Network control
NCOS	0-99	NCOS group to be added, changed, or removed
FRL	(0)-7	Facility restriction level
RWTA	Yes, (No)	Expensive route warning tone

Step 2: Gather data to define NARS feature parameters. Access LD86

REQ	NEW, CHG, OUT	Create, change, or remove data
CUST	0	Customer number
FEAT	ESN	Electronic Switched Network data block
MXLC	0-999	Maximum number of supplemental digit restriction blocks
MXSD	0-512	Maximum number of incoming trunk group exclusion tables that can be defined
MXIX	0-256	Maximum number of incoming trunk group exclusion tables
MXDM	0-256	Maximum number of digit manipulation tables
MXRL	0-256	Maximum number of route lists
MXFC	0-256	Maximum number of free calling area screening tables
AC1	xx	One or two digit NARS/BARS access code one
AC2	xx	One or two digit NARS access code two
DLTN	No, (Yes)	NARS/BARS dial tone after dialing AC1 or AC2
ERWT	No, (Yes)	Expensive route warning tone is not (is) provided
ERDT	0-(6)-10	Time in seconds that a user has to accept or reject an expensive route after ERWT is given; default is 6 s; range is in 2-second intervals
TODS	x hh mm hh mm	Start and end time-of-day schedules; BARS or NARS = 0-7 x = schedule number hh = hour mm = minutes
TGAR	Yes, (No)	Check for Trunk Group Access Restrictions Yes = examine TGAR/TARG when call is placed No = ignore TGAR/TARG when call is placed

Step 3: Gather data for each Digit Manipulation index (DGT). Access LD86

REQ	NEW, CHG, OUT	Create, change, or remove data
CUST	0	Customer number
FEAT	DGT	Digit manipulation index
DMI	1-255	Digit manipulation table index (see note below)
DEL	(0)-15	Number of leading digits to be deleted from the dialed number; default is 0
INST	x...x	Up to 24 leading digits to be inserted
Note: The maximum number of Digit manipulation tables is defined by prompt MXDM		

Step 4: Gather data for each Route List associated with A DGT. Access LD86

REQ	NEW, CHG, OUT	Create, change, or remove data
CUST	0	Customer number
FEAT	RLB	Route list data block
RLI	0-255	Route list index number
ENTR	0-63	Route list entry number
RTNO	0-511	Route number associated with the index
TDET	Yes, (No)	Tone detector is (is not) used
TYPE	TIE, (CC1), CC2	TIE = Tone detector for on-net calls (CC1) = Tone detector for Special Common Carrier, (SCC) Type 1 CC2 = Tone detector for Special Common Carrier, (SCC) Type 2
TONE	DIAL, (SCC)	Type of tone expected from SCC DIAL = normal dial tone SCC = SCC dial tone
TOD	0-7 X0-7	Time-of-Day schedule associated with the entry Turn off a time-of-day schedule
EXP	Yes, (No)	Entry is (is not) classed as expensive
FRL	(0)-7	Minimum Facility Restriction Level a user must have to access the entry

DMI	(0)-255	Index number of the digit manipulation table to be used for the entry; default is 0, no digit manipulation required
FCI	(0)-255	Free calling area screening table index number (FCAS) (0) = no FCAS required
OHQ	Yes, (No)	Off Hook Queuing is (is not) allowed on the entry
CBQ	Yes, (No)	Call Back Queuing is (is not) allowed on the entry
ISET	(0)-32	Number of entries in the initial route set
MFRL	(MIN), 0-7	Minimum FRL used to determine autocode prompting

Step 5: Gather data for each Incoming Trunk Group Exclusion Index (ITGE). Access LD86

REQ	NEW, CHG, OUT	Create, change, or remove data
CUST	0	Customer number
FEAT	ITGE	Incoming trunk group exclusion data block
ITEI	1-127	Incoming trunk group exclusion index number; if REQ was “OUT” all route entries defined for the entered index are removed
RTNO	0-511	Route number associated with index; precede with an X to delete an existing route

Step 6: Gather NARS translation data. Access LD90

REQ	NEW, CHG, OUT	Create, change, or remove data
CUST	0	Customer number
FEAT	NET	Network translation tables
TRAN	AC1, AC2, SUM	Access code 1, 2, or summary tables
TYPE	LOC HNPA NPA HLOC NXX SPN NXCL	Location code Home NPA translation code Number plan area translation code Home location code Central Office translation code Special Number translation code Speed call
	<return>	Return to REQ

REQ	NEW, CHG, OUT	Create, change, or remove data
The following prompt occurs if TYPE is LOC:		
LOC	x...x	Location code (3 digits) or extended LOC (3 to 7)
RLI	0-255	Route list index
ITEI	(0)-255	Incoming trunk group exclusion index
LDN	xx...xx	Up to ten-digit listed directory number including NPA
DID	Yes, (No)	This location arranged for DID
MNXX	Yes, (No)	Multiple NXX codes and ranges
SAVE	1-4	Number of trailing digits to be saved in dialed extension number; must be 4 if MNXX = Yes
OFFC	xxx	NXX of the DID number; prompted if MNXX = Yes
RNGE	0-9999 0-9999	Bottom and top of range of DID numbers
The following prompt occurs if TYPE is HNPA:		
HNPA	xxx	Home NPA
The following prompts occur if TYPE is NPA:		
NPA	xxx, xxx yyy	Area code translation, extended NPA code translation
RLI	0-255	Route list index
SDRR	aaa	Type of supplemental restriction or recognition
DMI	1-255	Digit manipulation table index
DENY	x...x	Number to be denied within the HNPA, NPA, NXX, SPN, or SDRR
LDID	x...x	Local DID number recognized within the HNPA, NPA, NXX, or SPN. The maximum number of digits allowed is 10-m (11-m for 1 + dialing).
LDDD	x...x	Local DDD number recognized within the HNPA, NPA, NXX, or SPN. The maximum number of digits allowed is 10-m (11-m for 1 + dialing).

REQ	NEW, CHG, OUT	Create, change, or remove data
DID	x...x	Remote DID number recognized within the HNPA, NPA, NXX, or SPN. The maximum number of digits allowed is 10-m (11-m for 1 + dialing).
DDD	x...x	Remote DDD number recognized within the HNPA, NPA, NXX, or SPN. The maximum number of digits allowed is 10-m (11-m for 1 + dialing).
ITED	x...x	Incoming trunk group exclusion codes for HNPA, NPA, NXX, or SPN. The maximum number of digits allowed is 7-m.
ITEI	(0)-255	Incoming trunk group exclusion index
Legend: m = the number of digits entered for the prompt NPA X = a command used to clear a recognized xxx code <return> = A return after each subprompt takes you back to SDRR		
The following prompts appear if TYPE is NXX		
NXX	xxx, xxx yyy	Office code translation, extended NXX codes translation
RLI	0-255	Route list index
SDRR	aaa	Type of supplemental restriction or recognition
DMI	1-255	Digit manipulation table index
DENY	x...x	Number to be denied within the HNPA, NPA, NXX, SPN, or SDRR. The maximum number of digits allowed is 7-m.
LDID	x...x	Local DID number recognized within the HNPA, NPA, NXX, or SPN
LDDD	x...x	Local DDD number recognized within the HNPA, NPA, NXX, or SPN
DID	x...x	Remote DID number recognized within the HNPA, NPA, NXX, or SPN
DDD	x...x	Remote DDD number recognized within the HNPA, NPA, NXX, or SPN
ITED	x...x	Incoming trunk group exclusion codes for HNPA, NPA, NXX, or SPN
ITEI	(0)-255	Incoming trunk group exclusion index

REQ	NEW, CHG, OUT	Create, change, or remove data
The following prompts appear if TYPE is SPN:		
SPN	xxxx xxxx x..	Special number translation
RLI	0-255	Route list index
SDRR	aaa	Type of supplemental restriction or recognition
DMI	1-255	Digit manipulation table index
DENY	x...x	Number to be denied within the HNPA, NPA, NXX, SPN, or SDRR
LDID	x...x	Local DID number recognized within the HNPA, NPA, NXX, or SPN
LDDD	x...x	Local DDD number recognized within the HNPA, NPA, NXX, or SPN
DID	x...x	Remote DID number recognized within the HNPA, NPA, NXX, or SPN
DDD	x...x	Remote DDD number recognized within the HNPA, NPA, NXX, or SPN
ITED	x...x	Incoming trunk group exclusion codes for HNPA, NPA, NXX, or SPN
ITEI	(0)-255	Incoming trunk group exclusion index
The following prompts appear if TYPE is NSCL:		
NSCC	xxx	One- to three-digit network speed call access code
SSCL	0-4095	System speed call list number

Step 7: Gather data to configure a Conventional Main for Off-Net Number Recognition. Access LD16

REQ	NEW, CHG	Add or change a route
TYPE	RDB	Route data block
CUST	0	Customer number
ROUTE	0-511	Route number
TKTP	TIE	Tie trunk
..		

CNVT	Yes, (No)	Route to conventional switch (prompted if the response to TKTP is Tie)
DDMI	(0)-255	Digit manipulation index (prompted if the response to CNVT is Yes)
ATDN	xxxx	Attendant DN of conventional main (prompted if the response to CVNT is Yes)
Note: If the DN expansion package is equipped, the attendant DN can have up to 7 digits.; otherwise, only 4 digits can be entered.		

The following procedure involves several load programs. In all cases, the prompt is NCOS; the range is 0-99.

Step 8: Gather data to assign a Network Class of Service group number to a list of items

Gather data to assign a Network Class of Service group number to each of the following items:

— 500/2500 sets (LD10)

— Option 11C Compact telephones (LD11)

— Attendant consoles (LD12)

— Trunks (LD14)

— Direct Inward System Access directory number See LD24)

— Authorization code (LD88)

Step 9:Enter data into the database

The final step in configuring Basic Alternate Route Selection is to enter the data gathered into the data base:

1 Login.

2 Load the appropriate load program.

3 Enter data requested by prompts until REQ prompt returns.

4 More data to be added/removed?

Yes = go to Step 2
No = perform data dump

Note: A data dump takes approximately 3 minutes to complete. If large amounts of data are being added, perform a data dump periodically. This ensures that entered data is not lost should a system reload occur.

5 Print data (respond with PRT to prompt REQ) and verify against data forms.

6 Corrections required?

Yes = go to Step 2
No = Refer to 553-2YY1-230 and perform applicable tests.

Meridian 1

Option11C Compact

1.5 PRI/DTI administration and maintenance guide

© 1997 Northern Telecom
All rights reserved
Information is subject to change without notice. Northern Telecom reserves the right to make changes in design or components as progress in engineering and manufacturing may warrant. This equipment has been tested and found to comply with the limits for a Class A digital device pursuant to Part 15 of the FCC rules.
Meridian and Option11C Compact are trademarks of Northern Telecom.
Publication number: 553-3121-310
Document release: Standard 1.00
Date: November 1997
Printed in Canada

NORTEL
NORTHERN TELECOM