555-102-301 **Issue 1, July 1987**

AT&T SYSTEM 85

Release 2, Versions 1, 2, 3, and 4

FEATURES

Reference Manual

Copyright© 1987 AT&T
All Rights Reserved

Printed in U.S.A.

TO ORDER COPIES OF THIS MANUAL

Call: AT&T Customer Information Center on 800-432-6600
In Canada call 800-255-1242

Write: AT&T Customer Information Center
2855 North Franklin Road
P. O. Box 19901
Indianapolis, Indiana 46219

TO COMMENT ON THIS MANUAL

Call: AT&T Document Development Organization

Hot Line: 800-334-0404

In North Carolina call: 919-727-3167

For more information about AT&T documents see
AT&T Business Communications Systems
Publications Catalog, 555-000-010

CONTENTS

INTRODUCTION 1-1
USE OF THIS MANUAL 1-1
ORGANIZATION OF THIS MANUAL 1-1
ENHANCEMENTS FOR RELEASE 2, VERSION 4 1-3

ABBREVIATED DIALING 2-1

ACCUNET® SERVICE INTERFACE 3-1

ADVANCED PRIVATE LINE TERMINATION 4-1

ATTENDANT AUTO-MANUAL SPLITTING 5-1

ATTENDANT CALL WAITING 6-1

ATTENDANT CONTROL OF TRUNK GROUP ACCESS 7-1

ATTENDANT DIRECT EXTENSION SELECTION WITH BUSY LAMP FIELD 8-1

ATTENDANT DIRECT TRUNK GROUP SELECTION 9-1

ATTENDANT DISPLAY 10-1

ATTENDANT INTERPOSITION CALLING AND TRANSFER 11-1

ATTENDANT RECALL 12-1

ATTENDANT RELEASE LOOP OPERATION 13-1

AUDIX 14-1

AUTHORIZATION CODES 15-1

AUTOMATIC ALTERNATE ROUTING 16-1

AUTOMATIC CALL DISTRIBUTION 17-1

AUTOMATIC CALLBACK 18-1

AUTOMATIC CIRCUIT ASSURANCE 19-1

AUTOMATIC IDENTIFICATION OF OUTWARD DIALING 20-1

AUTOMATIC ROUTE SELECTION 21-1

AUTOMATIC TRANSMISSION MEASUREMENT SYSTEM 22-1

BRIDGED CALL 23-1

BUSY VERIFICATION OF LINES 24-1

CALL COVERAGE 25-1

CALL FORWARDING—BUSY AND DON’T ANSWER 26-1

CALL FORWARDING—DON’T ANSWER 27-1

CALL FORWARDING—FOLLOW ME 28-1

CALL PARK 29-1
CALL PICKUP 30-1
CALL VECTORING 31-1
CALL WAITING 32-1
CENTRALIZED ATTENDANT SERVICE 33-1
CENTRALIZED MESSAGE DETAIL RECORDING 34-1
CODE CALLING ACCESS 35-1
CONFERENCE—ATTENDANT SIX PARTY 36-1
CONFERENCE—THREE PARTY 37-1
DATA CALL SETUP 38-1
DATA COMMUNICATIONS ACCESS 39-1
DATA PROTECTION 40-1
DEDICATED SWITCH CONNECTIONS 41-1
DIAL ACCESS TO ATTENDANT 42-1
DIGITAL MULTIPLEXED INTERFACE 43-1
DIGITAL SERVICE (DS1) INTERFACE 44-1
DIRECT DEPARTMENT CALLING 45-1
DIRECT INWARD DIALING 46-1
DESCRIPTION 46-1
DIRECT OUTWARD DIALING 47-1
DISPLAY—VOICE TERMINAL 48-1
DISTRIBUTED COMMUNICATIONS SYSTEM 49-1
ENHANCED UNIFORM CALL DISTRIBUTION 50-1
EXTENSION NUMBER PORTABILITY 51-1
FACILITIES RESTRICTION LEVEL 52-1
FORCE ADMINISTRATION DATA SYSTEM 53-1
FOREIGN EXCHANGE ACCESS 54-1
HOLD 55-1
HOST COMPUTER ACCESS 56-1
HOST COMPUTER FEATURE 57-1
HOT LINE 58-1
HUNTING 59-1
INFORMATION SYSTEMS NETWORK INTERFACE 60-1
INTEGRATED SERVICES DIGITAL NETWORK/PRIMARY RATE INTERFACE 61-1

INTERCEPT TREATMENT 62-1
INTERCOM—AUTOMATIC 63-1
INTERCOM—DIAL 64-1
INTERCOM—MANUAL 65-1
INTEREXCHANGE CARRIER ACCESS 66-1
INTERPARTITION ACCESS 67-1
LAST EXTENSION DIALED 68-1
LAST NUMBER DIALED 69-1
LEAVE WORD CALLING 70-1
LINE LOCKOUT 71-1
LINE/FEATURE STATUS INDICATION 72-1
LOUDSPEAKER PAGING ACCESS 73-1
MAIN/SATELLITE/TRIBUTARY 74-1
MALICIOUS CALL TRACE 75-1
MANUAL SIGNALING 76-1
MESSAGE WAITING 77-1
MESSAGE WAITING — AUTOMATIC 77-1
MESSAGE WAITING — MANUAL 77-9
MODEM POOLING 78-1
MULTIAPPEARANCE PRESELECTION AND PREFERENCE 79-1
MULTIPLE LISTED DIRECTORY NUMBERS 80-1
MUSIC-ON-HOLD ACCESS 81-1
OFF-PREMISES DATA-ONLY EXTENSIONS 82-1
OVERRIDE 83-1
PERSONAL CENTRAL OFFICE LINE 84-1
PC/PBX CONNECTION 85-1
POWER FAILURE TRANSFER 86-1
PRECEDENCE CALLING 87-1
PRIORITY CALLING 88-1
PRIVACY—ATTENDANT LOCKOUT 89-1
PRIVACY—MANUAL EXCLUSION 90-1
QUEUING 91-1
RADIO PAGING ACCESS 92-1
RECALL SIGNALING 93-1
RECORDED TELEPHONE DICTATION ACCESS 94-1

REMOTE ACCESS 95-1
RESTRICTION—ATTENDANT CONTROL OF VOICE TERMINALS 96-1
RESTRICTION—CODE RESTRICTION 97-1
RESTRICTION—MISCELLANEOUS TRUNK RESTRICTIONS 98-1
RESTRICTION—TOLL RESTRICTION 99-1
RESTRICTION—VOICE TERMINAL RESTRICTIONS 100-1
RINGING — ABBREVIATED AND DELAYED 101-1
RINGING CUTOFF 102-1
RINGING — DISTINCTIVE 103-1
RINGING TRANSFER 104-1
ROUTE ADVANCE 105-1
SERIAL CALLS 106-1
STATION MESSAGE DETAIL RECORDING 107-1
STRAIGHTFORWARD OUTWARD COMPLETION 108-1
TENANT SERVICES 109-1
TERMINAL BUSY INDICATIONS 110-1
THROUGH DIALING 111-1
TIMED RECALL ON OUTGOING CALLS 112-1
TIMED REMINDER 113-1
TOUCH-TONE CALLING SENDERIZED OPERATION 114-1
TOUCH-TONE DIALING 115-1
TRANSFER 116-1
TRUNK GROUP BUSY/WARNING INDICATORS TO ATTENDANT 117-1
TRUNK VERIFICATION—ATTENDANT 118-1
TRUNK VERIFICATION—VOICE TERMINAL 119-1
TRUNK-TO-TRUNK CONNECTIONS 120-1
UNATTENDED CONSOLE SERVICE — ALTERNATE CONSOLE POSITION 121-1
UNATTENDED CONSOLE SERVICE—CALL ANSWER FROM ANY VOICE TERMINAL 122-1
UNATTENDED CONSOLE SERVICE — PRESELECTED CALL ROUTING 123-1
UNIFIED MESSAGING 124-1
UNIFORM CALL DISTRIBUTION 125-1
VARIABLE FORMAT CALL DETAIL RECORDING 126-1
VISUALLY IMPAIRED ATTENDANT SERVICE 127-1

WIDE AREA TELECOMMUNICATIONS SERVICE ACCESS 128-1

A. APPENDIX A: CONFIGURATION LIMITS A-1

B. APPENDIX B: RELEASE 2 CALL DISTRIBUTORS B-1

C. APPENDIX C: ADMINISTRATION FACILITIES C-1

D. APPENDIX D: DATA COMMUNICATIONS D-1
- DIGITAL FEATURES AND SERVICES D-1
- BASIC DIGITAL SIGNALS D-3
- DATA COMMUNICATIONS APPLICATIONS D-5
- SPECIFIC SIGNALING FORMATS D-25

E. APPENDIX E: IMAGES, APPEARANCES, AND EXTENSIONS E-1

F. APPENDIX F: ENHANCED TRUNKING F-1

G. APPENDIX G: THE DCIU (DATA COMMUNICATIONS INTERFACE UNIT) G-1
- GENERAL CONCEPTS G-1
- BASIC DCIU ADMINISTRATION G-13
- FLEXIBLE DCIU ADMINISTRATION G-47

H. APPENDIX H: COMPATIBILITY MATRIX H-1

I. APPENDIX I: CALL-HANDLING APPLICATIONS FOR EXECUTIVES I-1

J. APPENDIX J: ACRONYMS AND ABBREVIATIONS J-1

GLOSSARY GL-1

INDEX IN-1

LIST OF FIGURES

Figure 8-1. Attendant Console With DXS/BLF Option 8-1

Figure 9-1. Attendant Console With DTGS Buttons 9-1

Figure 10-1. Attendant Console With Alphanumeric Display 10-1

Figure 16-1. Automatic Alternate Routing 16-2

Figure 16-2. AAR Feature Flow 16-6

Figure 16-3. AAR Feature Flow (Sheet 2 of 3) 16-7

Figure 16-4. AAR Feature Flow (Sheet 3 of 3) 16-8

Figure 17-1. ACD Priority Queuing 17-4

Figure 17-2. Simplified Pictorial of an ACD/CMS System 17-6

Figure 17-3. Agent State Diagram for MIA Distribution 17-7

Figure 17-4. Button Configuration for ACD Agent (16-Button Set) 17-24

Figure 17-5. Button Configuration for ACD Agent (40-Button Set) 17-25

Figure 17-6. Button Configuration for ACD Agent (7407D Integrated Display Terminal) 17-26

Figure 17-7. Button Configuration for ACD Agent (7406D With Display) 17-27

Figure 17-8. Agent Who Also Receives Direct Calls (16-Button Set) 17-28

Figure 17-9. Agent Who Also Receives Direct Calls (40-Button Set) 17-29

Figure 17-10. Agent Handling ACD Calls for Two Splits (40-Button Set) 17-30

Figure 17-11. Split Supervisor — Without Agent Responsibilities (16-Button Set) 17-31

Figure 17-12. Split Supervisor — Without Agent Responsibilities (40-Button Set) 17-32

Figure 17-13. Split Supervisor — With Agent Responsibilities (40-Button Set) 17-33

Figure 21-1. ARS Feature Flow 21-8

Figure 21-1. ARS Feature Flow (Sheet 2 of 4) 21-9

Figure 21-1. ARS Feature Flow (Sheet 3 of 4) 21-10

Figure 21-1. ARS Feature Flow (Sheet 4 of 4) 21-11

Figure 31-1. Trunk Groups, VDNs, Vectors, and Answering Destinations 31-2

Figure 31-2. Methods of Routing Incoming VDN Calls 31-6

Figure 33-1. Centralized Attendant Service—Block Diagram 33-3

Figure 34-1. Call Record Output Arrangements 34-1

Figure 34-2. Example of 94A LSU Call Record Output to a Polling Device 34-11
Figure 34-3. Standard 18-Word Default Record 34-12
Figure 38-1. 3270 Equipment Configuration 38-5
Figure 38-2. Data Call Setup Analog Arrangements 38-7
Figure 38-3. Data Call Setup Digital Arrangements 38-8
Figure 38-4. Data Call Setup With Dual Interface Arrangements 38-17
Figure 38-5. Off-Premises Data Calls From Local Stations to Remote Hosts 38-18
Figure 38-6. Off-Premises Data Calls From Remote Stations to Local Hosts 38-19
Figure 39-1. Data Communications Access, On-Premises Connections 39-1
Figure 39-2. Data Communications Access, Off-Premises Connections 39-2
Figure 41-1. Local DSC Configurations 41-3
Figure 41-2. DSC Between Two Host Computers 41-3
Figure 41-3. DSC Between Host Computer and Remote Job Entry Stations 41-4
Figure 41-4. DSC Between Packet Switches 41-4
Figure 41-5. DSC as DCIU Link 41-5
Figure 41-6. DSC to DS1 Trunk Using Suppressed Signaling Channel 41-5
Figure 43-1. Interworking With DMI (Digital Multiplexed Interface) BOS (Bit Oriented Signaling) 43-3
Figure 43-2. Interworking With DMI MOS (Message Oriented Signaling) 43-3
Figure 43-3. Multiple DMI (BOS and MOS) Arrangement 43-4
Figure 44-1. DS1 Tandem Tie Trunk Networking Arrangements 44-4
Figure 44-2. CEM (Channel Expansion Multiplexer) Configuration 44-8
Figure 44-3. CDM Configuration 44-10
Figure 44-4. CDM Use With Multipoint Dedicated Private Lines 44-11
Figure 44-5. CEM/CDM Combined Use Configuration 44-11
Figure 48-1. 40-Character D401A Display Module and Typical Button Assignments 48-1
Figure 49-1. A DCS Cluster Connected to Another Network 49-1
Figure 49-2. Link Minimization DCS Configuration 49-5
Figure 49-3. Direct Linkage DCS Configuration 49-6
Figure 49-4. Alternate Routing DCS Arrangement 49-8
Figure 49-5. Data Path Looping With Alternate Routing 49-10
Figure 49-6. Local Adjunct Configuration 49-14
Figure 49-7. Remote Adjunct Configuration 49-15
Figure 49-8. Remote Adjunct Configuration With a DCIU Hop 49-16

Figure 49-9. Adjunct to Remote Switch Configuration 49-17
Figure 49-10. Adjunct to Remote Switch Configuration With DCIU Hop 49-18
Figure 49-11. Remote AUDIX Without Centralized Messaging 49-19
Figure 49-12. Remote AUDIX for Pre-Release 2, Version 4, Switches 49-19
Figure 49-13. Remote AUDIX Configuration with Release 2, Version 4, Switches 49-19
Figure 49-14. Message Center Service Without Centralized Messaging 49-20
Figure 49-15. Message Center Service With Centralized Messaging 49-20
Figure 49-16. Prefix Type 5-Digit Dialing DCS Configuration 49-22
Figure 49-17. Unrestricted 5-Digit Dialing in a DCS Configuration 49-24
Figure 49-18. DCS/ISDN Network Connectivity 49-33
Figure 50-1. EUCD Priority Queuing 50-2
Figure 50-2. Simplified Pictorial of an EUCD Arrangement 50-6
Figure 50-3. Button Configuration for EUCD Agent (16-Button Set) 50-19
Figure 50-4. Button Configuration for EUCD Agent (7407D Integrated Display Terminal) 50-20
Figure 50-5. Button Configuration for EUCD Agent (7406D With Display) 50-21
Figure 50-6. Agent Who Also Receives Direct Calls (16-Button Set) 50-22
Figure 50-7. Agent Handling EUCD Calls for Two Splits (40-Button Set) 50-23
Figure 50-8. Split Supervisor, Without Agent Responsibilities (16-Button Set) 50-24
Figure 50-9. Split Supervisor With Agent Responsibilities (40-Button Set) 50-25
Figure 51-1. Portability Subnetwork Characteristics 51-1
Figure 51-2. Extension Number Steering 51-3
Figure 51-3. Network Location Code Assignments (RNXs) 51-6
Figure 51-4. Mixing System 85 Networking Arrangements 51-9
Figure 51-5. Call Routing With A Portability Subnetwork 51-10
Figure 56-1. Host Computer Access Feature 56-1
Figure 56-2. Host Computer Access, Reduced Cost Option 56-2
Figure 60-1. System 85 to ISN Connectivity 60-1
Figure 61-1. The ISDN Service Concept 61-1
Figure 61-2. ISDN/BRI Arrangement 61-3
Figure 61-3. ISDN/PRI Connections 61-5
Figure 61-4. The ISO Reference Model 61-6
Figure 61-5. Available ISDN Display Messages 61-11
Figure 61-6. ISDN / DMI BOS Service Arrangement 61-17

Figure 61-7. ISDN / DMI MOS (Message-Oriented Signaling) Service Arrangement 61-18
Figure 61-8. DCS/ISDN Network Connectivity 61-19
Figure 73-1. Hardware Setup for Loudspeaker Paging 73-12
Figure 74-1. Main/Satellite and Main/Tributary Configuration 74-1
Figure 74-2. Partially Connected Main/Satellite Configuration 74-2
Figure 75-1. Malicious Call Trace Hardware Configuration 75-16
Figure 78-1. System 85, Modem Pooling Arrangement 78-2
Figure 80-1. Sample Use of Multiple LDNs 80-2
Figure 82-1. System 85, Off-Premises Data-Only Extension Arrangements 82-2
Figure 85-1. PC/PBX Connection Configuration (Packages 1 and 2) 85-2
Figure 85-2. PC/PBX Connection Configuration (Packages 3, 4, 5, and 6) 85-3
Figure 86-1. Power Failure Transfer Configuration 86-2
Figure 91-1. Queuing Feature Flow 91-4
Figure 91-1. Queuing Feature Flow (Sheet 2 of 3) 91-5
Figure 91-1. Queuing Feature Flow (Sheet 3 of 3) 91-6
Figure 107-1. Call Record Output Arrangements 107-1
Figure 107-2. Standard 15-Word Default Record 107-11
Figure 107-3. Example of SMDR Call Information Report 107-12
Figure 109-1. Basic Partitioning Concepts 109-4
Figure 109-2. ARS Routing in the Tenant Services Environment 109-9
Figure 121-1. Interrelation of Unattended Console Service Features 121-3
Figure 126-1. CDR Record Generation 126-2
Figure 126-2. PCC Port Output Options 126-3
Figure 126-3. Recommended Standard 18-Word ISDN Record 126-18
Figure 126-4. Recommended Standard 24-Word CDR Record (Sheet 1 of 2) 126-19
Figure 126-5. Example Call Records From PCC Direct Output to an ASCII Terminal 126-24
Figure 126-6. Example Call Records From 3B2 CDRU Direct Output to an ASCII Terminal 126-27
Figure 127-1. Visually Impaired Attendant Console Devices 127-2
Figure D-1. Unipolar Digital Format D-3
Figure D-2. Bipolar Digital Format D-4
Figure D-3. Control Sequence — Station-to-Station Call (Sheet 1 of 2) D-18
Figure D-3. Control Sequence — Station-to-Station Call (Sheet 2 of 2) D-19

Figure D-4. Control Sequence — Off-Premises Call (Using Modem Pooling) D-20
Figure D-4. Control Sequence — Off-Premises Call (Sheet 2 of 2) D-21
Figure D-5. Control Sequence — Station-to-Station Call, Called Extension Busy D-22
Figure D-6. Control Sequence — Incoming Call Answer D-23
Figure D-7. Control Sequence — Disconnect With Keyboard Dialing Enabled D-24
Figure D-8. The B8ZS Digital Frame Format D-25
Figure D-9. D4 Framing Format D-26
Figure D-10. The Extended Superframe D-27
Figure E-1. Relationship of Images, Appearances, and Extensions E-3
Figure E-2. Shared Extensions E-4
Figure F-1. E&M Wink Start Signaling Sequence F-8
Figure F-2. E&M Delay Dial Signaling Sequence F-9
Figure G-1. Release 2 DCIU G-3
Figure G-2. Link Minimization DCS Configuration G-6
Figure G-3. Direct Linkage DCS Configuration G-8
Figure G-4. DCIU Connecting Arrangements G-10
Figure G-5. Typical 3-Node DCS Administration G-14

LIST OF TABLES

Table 14-1. Comparison of AUDIX Parameters 14-11
Table 15-1. Authorization Code Parameters 15-2
Table 15-2. Recommended Digits for Authorization Codes 15-4
Table 17-1. Available Choices for Customer Interface 17-13
Table 17-2. DNIS Display Information 17-15
Table 17-3. ACD Queue-Status Display Information 17-17
Table 17-4. ACD Function Access 17-48
Table 31-1. DNIS Display Information 31-7
Table 31-2. Criteria for Success/Failure of Vector Commands 31-11
Table 34-1. Call Detail Record Word Structure 34-3
Table 34-2. CDR Condition Codes 34-5
Table 34-3. CDR Standard Formats 34-8
Table 34-4. Values of LIM 34-14
Table 38-1. Message Set for Data Call Setup Terminal Dialing 38-13
Table 48-1. Display Information 48-3
Table 48-2. ASCII Character Set 48-14
Table 49-1. Routing Tables for Alternate Routing Data Path 49-9
Table 50-1. Available Choices for Customer Interface 50-10
Table 50-2. DNIS Display Information 50-13
Table 50-3. EUCD Function Access 50-33
Table 67-1. Extension Partitions and Partition Groups 67-3
Table 70-1. Leave Word Calling Storage Option Attributes 70-1
Table 75-1. Format of the Controlling Attendant's 8-Character Display 75-2
Table 78-1. Direct Distance Dialing Modems Suitable for Conversion Resources 78-7
Table 87-1. Precedence Level Signaling 87-3
Table 97-1. Allowable Code Restriction Levels 97-1
Table 101-1. Ringing Characteristics by Type 101-1
Table 103-1. Timing for System 85 Ringing Cycles 103-1
Table 107-1. Call Detail Record Word Structure 107-4
Table 107-2. CDR Condition Codes 107-6

Table 124-1. EDC Interactions With Unified Messaging Services 124-4
Table 124-2. MCS Interactions With Other Unified Messaging Services 124-6
Table 124-3. AUDIX Interactions With Other Unified Messaging Services 124-8
Table 126-1. VFCDR Condition Codes 126-7
Table 126-2. Hexadecimal Code for Active and Inactive Feature Flags 126-8
Table 126-3. Call Detail Record Word Structure 126-14
Table 126-4. Example Data Items in a Formatted VFCDR Record for Miscellaneous Call Types 126-17
Table 126-5. CDR Default and Recommended Standard Formats 126-21
Table 126-6. Possible Record Formats for CDR Devices 126-28
Table 127-1. Distinctive Audible Signals 127-1
Table D-1. Summary of Internal Digital Features and Services D-1
Table D-2. Summary of Digital Interface Features D-2
Table D-3. Call Progress Messages — Call Origination D-9
Table D-4. Call Progress Messages — Terminating Call D-13
Table D-5. RS-232C Interface Leads D-15
Table F-1. Trunk Types and Their Signaling Characteristics F-3
Table F-2. Trunk Signaling Number Definitions F-6
Table F-3. Universal Trunk Sequence Timing F-7
Table G-1. Release 2, DCIU Switch Link Port Reservations (NOTE) G-5
Table G-2. Release 2, Version 4, DCIU Recommended Port Reservations G-49
Table I-1. Administration Characteristics for Configuration A I-5
Table I-2. Administration Characteristics for Configuration B I-7
Table I-3. Administration Characteristics for Configuration C I-9
Table I-4. Administration Characteristics for Configuration D I-11
Table I-5. Administration Characteristics for Configuration E I-13
Table I-6. Administration Characteristics for Configuration F I-15
Table I-7. Administration Characteristics for Configuration G I-19
Table I-8. Administration Characteristics for Configuration H I-21
Table I-9. Administration Characteristics for Configuration I I-23
Table I-10. Administration Characteristics for Configuration J I-25
Table I-11. Administration Characteristics for Configuration K I-27
Table I-12. Administration Characteristics for Configuration L I-29
Table I-13. Administration Characteristics for Configuration M I-33

Table I-14. Administration Characteristics for Configuration N I-35
Table I-15. Administration Characteristics for Configuration O I-37

INTRODUCTION

This Reference Manual describes the features of the AT&T System 85 Release 2, through Version 4.

USE OF THIS MANUAL

This document is designed to help switch administrators and managers select communications features to be included in their initial system and to select features to be added after the system is in service. It provides feature descriptions, administration and hardware information and other considerations applicable to each available feature.

Also, this Reference Manual can be used as a tool for answering questions about the interactions between specific features. Each feature lists the significant interactions with other features. Both *supporting interactions* (those interactions where two features work together or can be used to enhance each other's performance), and *inhibiting interactions* (those interactions where one feature may interfere in some way with the operation of another) are included. Specific feature capacities and limitations are described in each separate feature section and are also summarized in tabular form in Appendix A.

ORGANIZATION OF THIS MANUAL

This Reference Manual is divided into two volumes. Each volume has a complete (for both volumes) table of contents and index. The manual as a whole consists of the following sections:

- SYSTEM 85 FEATURES — These sections list and describe the features currently available on the System 85. Included are:
  - — Traditional voice telephone services
  - — Data communication features including integrated voice/data services
  - — New call-processing capabilities provided by the switch
  - — Call management and support features
  - — Networking features.

  The features are presented in alphabetical order by feature name. The feature sections use a format that is divided into major headings as follows.

DESCRIPTION

Defines the feature and tells what service it performs for the user or what function it serves within the switch.

USER OPERATIONS

Lists the common step-by-step operations needed to use the feature. Comments about an individual step are enclosed in parentheses. System responses to an individual step are enclosed in brackets.

CONSIDERATIONS

If applicable, indicates factors to account for when the feature is used. If no significant considerations apply, this heading is omitted.

INTERACTIONS WITH OTHER FEATURES

Lists and briefly discusses the interactions between this feature and other features.

RESTRICTING FEATURE USE

If applicable, describes how the use of this feature can be restricted or controlled (by the customer and/or vendor). If no restrictions apply, this heading is omitted.

HARDWARE REQUIREMENTS

Identifies hardware items that each feature requires (beyond the normal station and switch hardware configuration).

FEATURE ADMINISTRATION

Describes feature assignment using various means of administration: MAAP (Maintenance and Administration Panel), SMT (System Management Terminal), TCM (Terminal Change Management), FM (Facilities Management), and CSM (Centralized System Management).

The TCM and FM features on the AP 16 apply only to System 85, Release 2, Version 3 and earlier switches.

- **APPENDIX A: CONFIGURATION LIMITS** — Lists the capacities and limitations applicable to the System 85, Release 2 switches. This information is presented in a tabular fashion to allow a quick comparison of the differences between versions of Release 2.
- **APPENDIX B: RELEASE 2 CALL DISTRIBUTORS** — Compares the call distribution features: DDC (Direct Department Calling), UCD (Uniform Call Distribution), EUCD (Enhanced Uniform Call Distribution), and ACD (Automatic Call Distribution). It lists the various features and attributes that are available from each of these features.
- **APPENDIX C: ADMINISTRATION FACILITIES** — Lists and briefly describes the various administration tools available for the System 85.
- **APPENDIX D: DATA COMMUNICATIONS** — Lists and describes some of the data communications signaling formats used with the System 85.
- **APPENDIX E: IMAGES, APPEARANCES, AND EXTENSIONS** — Describes and discusses the three basic ways of terminating a telecommunications line at a terminal device.

- **APPENDIX F: ENHANCED TRUNKING** — Lists and describes some of the new and enhanced trunking arrangements and services that are available with the System 85.
- **APPENDIX G: DCIU (DATA COMMUNICATIONS INTERFACE UNIT) ADMINISTRATION** — Describes the DCIU and discusses its various applications. This appendix also provides some recommend administration values for different feature and application configurations.
- **APPENDIX H: COMPATIBILITY MATRIX** — Lists various adjuncts, interfaces, and feature elements and shows their compatibility with the different versions of the System 85, Release 2 switch.
- **APPENDIX I: CALL-HANDLING APPLICATIONS FOR EXECUTIVES** — Describes ways of using selected call-handling features designed to support the communications needs high-level managers.
- **APPENDIX J: ACRONYMS AND ABBREVIATIONS** — Lists the acronyms and abbreviations used in this Reference Manual and their respective terms.
- **GLOSSARY** — Lists the commonly used terms and their definitions.
- **INDEX**.

ENHANCEMENTS FOR RELEASE 2, VERSION 4

Several new features and enhancements are available for System 85, Release 2, Version 4.

New Features

- Call Vectoring
- Integrated Services Digital Network / Primary Rate Interface
- Interpartition Access
- Malicious Call Trace
- PC/PBX Connection
- Tenant Services
- Variable Format Call Detail Recording.

Enhanced Features

The following are the features that are enhanced in System 85, Release 2, Version 4.

- Abbreviated Dialing
- AUDIX
- Automatic Call Distribution
- Automatic Circuit Assurance

- Call Coverage
- Digital Multiplexed Interface
- Distributed Communications System
- Hot Line
- Remote Access.

Feature Independent Enhancements

Some enhancements available with System 85, Release 2, Version 4, are not specifically related to a particular feature. These include the following:

- An Administrable RECALL Button

  Terminals available with the Version 4 switch that do not have a fixed RECALL button include:

  7401D

  7404D

  7406D

  7406D

  7407D

  510D.

  A *feature button* can be administered on these terminals as the RECALL button. This administered RECALL button will have the same uses as a fixed RECALL button. The RECALL button can be administered to a button position with zero, one, or two lamps. This enhancement is being retrofitted to Version 2 and Version 3 switches.

  Features requiring the RECALL button are:

  Attendant Recall

  Call Park

  Conference-Attendant Six Party

  Loudspeaker Paging Access

  Serial Calls.

- New 4-Digit Dial Access Codes

  In Version 4 switches, 4-digit dial access codes are allowed. However, the following features **do not** function with 4-digit dial access codes in a DCS if they are to be used between nodes.

  Attendant Control of Trunk Group Access

  Attendant Direct Trunk Group Selection

  ACA (Automatic Circuit Assurance).

- Trunk Signaling Enhancements

  Several trunking services are introduced that improve trunk performance, trunk maintenance operations, and service operations. For a detailed description of this enhancement, see Appendix F.

- VMAAP (Visual Maintenance and Administration Panel).

  VMAAP provides MAAP emulation on a CRT screen.

ABBREVIATED DIALING

DESCRIPTION

The Abbreviated Dialing feature allows terminal users to dial frequently called or emergency numbers with significantly fewer button presses than if the number were dialed in the usual way (i.e., one digit at a time). Abbreviated Dialing can be used to dial on- or off-premises numbers. A single Abbreviated Dialing call can dial as many as 36 characters.

Available Characters

The characters available for Abbreviated Dialing are the digits 0 through 9 and the special dialing characters ‘‘*’’ and ‘‘#.’’ Special function characters are also available. These special function characters can be stored with the number to be dialed and will cause the switch to perform actions such as:

- Allow digits to be entered manually from the terminal
- Cause a pause in the steam of digits being outpulsed
- Wait for dial tone
- Suppress selected digits on displays.

Number Size and Type

As many as 20 characters (digits and special function characters combined) can be stored in a single list item for Abbreviate Dialing. Up to 15 digits can be added manually to the stored digits, or if the need arises, two storage locations can be used together to dial as many as 36 characters automatically.

Any of the following type of numbers can be dialed automatically using Abbreviated Dialing:

- Feature* or trunk access codes
- Extension numbers
- Public/private network numbers
- International numbers

---

* While feature access codes generally are permitted, there are some cases when specific feature access codes are blocked. See the Considerations section for details.

- Portions of complete numbers (where Manual Digit Entry is used)
- Account Codes
- Authorization Codes.

Feature History and Development

This feature was first available with System 85 in Release 1. Subsequent enhancements have included the following:

- The system list was expanded from a maximum of 99 different items (i.e., numbers) in Release 2, Version 2 to a maximum of 9,999 different items in Release 2, Version 3. The system list can have 9, 99, 999, or 9,999 items in version 3 and later switches.
- Release 2, Version 2 switches have a capacity of 999 group lists. Each of these group lists can hold as many as 30 items.

  In Release 2, Version 3, there can be as many as 9,999 group lists. Each group list can have up to 95 items, in increments of 5 (i.e., 5, 10, 15, etc.).
- Each personal list in a Release 2, Version 2 switch can hold as many 30 items, while a personal list in a Release 2, Version 3 switch can contain up to 95 items.
- The Manual Digit Entry function was not new with Release 2, Version 3. However, the special encode that allows manual digits to be entered in the middle of a stored number was new.
- In Release 2, Version 4, the total number of personal and group lists combined is increased to 52,223, and the total number of records (list and button entries) is increased to 262,143. The basis for assigning Abbreviated Dialing is changed from extension to equipment location.

Special Functions

The following special functions can be used with Abbreviated Dialing for special dialing needs:

Pause (PA)

Used when a second dial tone is required before sending additional digits. This is typically used when a wait of 1.5 seconds is required for second dial tone provided on a trunk call.

Wait (WT)

Used when a longer pause is required before sending additional digits. This is used when a pause of 4 to 10 seconds is required before sending additional digits. This longer pause allows for trunk dial tone to be provided from other switches (long distance calls).

Mark (MK)

Used when an outgoing call requires the digit * or # to be outpulsed. Without the mark, a * or # is interpreted as the first digit of a dial access code and is not outpulsed. When the mark function is programmed into a stored number, the function is activated after a talk path is established with another switch via a trunk. If the user has an ABRVDIAL MARK button, the lamp lights when the function is active. It remains active for the duration of the call. A * or # can be entered in the stored number after the mark or can be dialed manually after accessing the stored number.

On switches earlier than Version 3, this problem can be handled by using the *manual digit entry* function. However, this reduces the functionality of Abbreviated Dialing when security codes are needed.

Stop or *Wait for Dial Tone (DT)*

Used in conjunction with Data Terminal (Keyboard) Dialing. It conditions the data terminal for return of dial tone from the switch. See the Data Call Setup feature.

Suppress

Used when a security code, such as a password or authorization code, is used in an Abbreviated Dialing list entry and a terminal with the Display—Voice Terminal feature is used. This function is available on Version 3 and later System 85 switches. By enclosing the password or authorization code in the suppress function, the characters of the security code are converted to ‘‘s’’ on the display. This avoids the possibility of inadvertently compromising the security code.

SPECIAL FUNCTION CODE ENTRY

Special function codes are entered in a list item along with the character string to be dialed. With one exception (the manual digit entry code) these codes are entered in much the same way as the dial characters. The switch administrator can enter them using the MAAP or SMT. Terminal users can also enter the special function codes if their terminals have an ABRVDIAL FUNCTION button or individual special function program buttons assigned. These special function codes cannot be entered from a voice terminal without these function buttons.

The ABRVDIAL FUNCTION button is useful when there is a need to conserve buttons. It can be used to program special functions by entering a function number after pressing the ABRVDIAL FUNCTION button. When there is no need to conserve buttons, individual function programming buttons can be assigned for the separate special functions.

Manual Digit Entry

Abbreviated Dialing can accept one or more digits dialed from the dialing pad to create multiple uses for the same stored number.

- Digits Entered Manually After the Stored Digit String

  Abbreviated Dialing automatically appends manually dialed digits to the end of the stored number digit string. This allows flexible use of a single stored number — for example, the stored number automatically dials an on-network trunk access code and network location code; the user then manually dials a specific extension number.

- Manual Digits Inserted in the Middle of the Stored Digits

  A special encode (Mnn) can be entered inside a stored number that causes the switch to wait for a designated number of digits (nn = 01 through 15). The switch waits at the point where the encode is encountered. For example, the switch can outpulse the first four or five digits of a stored number (i.e., a data trunk access code), wait for five account code digits from the user, and then dial a distant data port. The Manual Digit Entry function code can only be entered by the switch administrator or service personnel during switch administration. This special function cannot be added from a voice terminal. Three character spaces (of the 20 spaces available) are needed to enter this function code in a stored number.

Methods of Storage

System 85 provides two forms of number storage: button-stored numbers, and list-stored numbers.

BUTTON-STORED NUMBERS

Button-stored numbers are associated with an AD (Automatic Dialing) button on a multiappearance voice terminal or on a 7103A Programmable voice terminal. A button-stored number can also indirectly dial a list-stored number by entering the number's list address in the button's memory.

NOTE

Numbers stored on a 7103A Programmable voice terminal do not require memory space on the switch. They are stored within the voice terminal.

List-Stored Numbers

Unlike button-stored numbers, **list-stored** numbers can be reserved for a single user or shared by several users. These lists are kept in switch memory and access to them (either for the purpose entering list items or to use list items to make a call) is controlled through switch administration.

Abbreviated Dialing List Types

Abbreviated Dialing lists are categorized in either (or both) of two ways: functionally, or relationally.

Functional List Types

There are three functional types of Abbreviated Dialing lists:

- System List
  - — Up to 9999 items (i.e., numbers) can be provided.
  - — Numbers are accessible (i.e., can be dialed) by any user on the switch or only by a selected group of users.
  - — The switch administrator programs this list (adds, changes, or deletes numbers).
- Group Lists
  - — Up to 9999 group lists can be assigned. The maximum number depends on the size of the lists.
  - — Each group can have from 5 to 95 items in increments of 5.
  - — Numbers are accessible by a selected group of users who frequently dial the same numbers.
  - — One of the group voice terminals is assigned to program the group list numbers (or the list can be programmed by the switch administrator).

    In Version 3 and earlier switches, any extension that homes to that terminal may be used to perform the programming.

    In Version 4, any extension assigned to that terminal can be used to program the group list.
- Personal Lists
  - — Any number of personal lists (up to two per terminal) can be provided as long as storage is available.
  - — Each list can have from 5 to 95 items in increments of 5.
  - — Numbers are accessible by the user of the assigned terminal only. Personal lists provide abbreviated dialing of numbers for users without available feature buttons — buttons that would otherwise be used for button-stored numbers.
  - — The owner (or switch administrator) programs this list.

Relational List Types

There are two relational list types. These categories are not in addition to the functional types, but rather categories the same lists in relation to a specific user terminal or terminal group.

- List A

  Each terminal can have access to two abbreviated dialing lists. In relationship to a particular terminal, the first of these lists is usually designated as List A. List A can be either a personal list or a group list. Traditionally, List A has been used for the personal list of a terminal, however, this is not a required relationship.

- List B

  List B is the second of two possible lists that can be assigned to a terminal. This can be a personal list or a group list. Traditionally, List B has been used for the group list of a terminal, however, this is not a required relationship.

Not only can List A and List B be either a personal or group list, but they can both be personal lists or they can both be group lists. The System List is the only functional list category that cannot apply to either of the relational list types.

LIST-STORED NUMBER ADDRESSES

Each list-stored number has an address that consists of a list-access code and a list-item (or index) number. Three list-access codes are assigned in each System 85.

- One list-access code is assigned to the system list. Restricted users are unable to dial this code.
- One list-access code is assigned to provide users with access to their A-List. This list may be a group list or personal list.
- The other list-access code is assigned to provide access to a user's B-list. This list may also be a group or personal list.

The list-item number corresponds to a stored number's position in the list. Lists of five numbers have index numbers 1 through 5. Lists of ten numbers have index numbers 0 through 9 with 0 as the tenth item. All other sizes of lists use 2-, 3-, or 4-digit item numbers (e.g., list size 999 — list index numbers 000 through 999). Leading zeros must be dialed to access these stored numbers.

USER OPERATIONS

The following are the user operating procedures for this feature.

Making a Call Using Abbreviated Dialing

With Automatic Dialing (AD xxxx) buttons:

- Go off-hook. [Dial tone]
- Press the desired AD button. [Call-progress tone] (The ‘‘xxxx’’ on the button label identifies the number or name associated with the button.)

Without AD buttons (2-Step Abbreviated Dialing):

- Go off-hook. [Dial tone]
- Press the list selection button (i.e., SYSTEM, GROUP, or PERSONAL),

  or
- Dial the list access code. [Second dial tone]
- Dial the list-item number associated with a stored number. Leading zeros must be dialed. [Call-progress tone]
- If two list items are to be dialed together (i.e., to form a dialed number of more than 20 characters), press the list button or dial its access code again* and dial the second list-item number.

Programming a Stored Number

With AD buttons:

- Press ABRVDIAL PROGRAM,

  or
- Dial the Abbreviated Dialing program access code. [Confirmation tone]
- Press an AD button. [Dial tone]
- Dial the number to be stored. (See *Programming Special Functions*.)
- Press the AD button again. [Confirmation tone]

---

* When a list access code is used to access a **second list item** for 2-step Abbreviated Dialing, the first digit of the access code **must be** either a ‘‘*’’ or a ‘‘#.’’

Without AD buttons (list-stored numbers):

To program an Abbreviated Dialing list, a terminal with the appropriate permissions must be used.

- Press ABRVDIAL PROGRAM,

  or

- Dial the program access code. [Confirmation tone] (Once in the programming mode, any number of list-items can be programmed.)
- Press list selection button (i.e., GROUP, PERSONAL, List A, List B),

  or

- Dial the appropriate list access code. [Dial tone]
- Dial an item number in the list. [Second dial tone]
- Dial the number to be stored. (See *Programming Special Functions*.)
- Press the list selection button again to enter the new number,

  or

- Press ‘‘#’’ if no button is provided. [Confirmation tone]
- Press ABRVDIAL PROGRAM to leave the program mode. This button can be pressed instead of the list button to leave the list item unchanged.

Programming Special Functions (Used While Entering the Stored Number)

Using ABRVDIAL FUNCTION (also known as ‘‘ESCAPE’’) button:

- Press ABRVDIAL FUNCTION.
- Press the digit 1, 2, 3, or 6 to program:

  1 Pause

  2 Wait

  3 Mark

  6 Suppress.

  Mnn (manual digit entry) cannot be programmed by the user. This function must be entered by the switch administrator or service personnel.

Using ABRVDIAL PAUSE, ABRVDIAL WAIT, ABRVDIAL MARK buttons:

- For 1-button programming, press one of these buttons to program the named function.

Reviewing the Contents of Stored Number (Display— Voice Terminal Feature Required)

To review the contents of an AD (Automatic Dialing) button:

- Remain on-hook.
- Press the AD button. [Display shows the stored number.]

NOTE:: With Release 2, Versions 4, if the AD button is used to access a list stored number (system, group, or personal list), the contents of the list item are displayed.

CONSIDERATIONS

Feature Capacities

Group list items, personal list items, data terminal default dialing entries, and Automatic Dialing buttons share the same storage area within switch memory. Therefore, the number of list items and buttons assigned depends on the memory area allocated. The maximum area allows for 65,535 Automatic Dialing buttons in Version 3 and 262,143 in Version 4 if no lists are assigned. Additional Automatic Dialing buttons can be provided on 7103A Programmable voice terminals. They can be provided with as many Automatic Dialing buttons as available on the set. Their numbers are stored inside the terminal and do not require memory space on the switch.

Without Automatic Dialing buttons assigned (besides those assigned on 7103A terminals), the maximum number of list items that can be assigned is 24,000 for Version 1 switches, 65,275 for Version 2 and Version 3 switches, and 262,143 for Version 4 switches. This allows from 4,800 5-item lists in Version 1 to 52,428 5-item lists in Version 4. As 10-item, 15-item, and 20-item lists are assigned, etc., the maximum number of lists is reduced. The same is true as Automatic Dialing buttons are assigned.

A stored telephone number may contain as many as 20 characters. The characters define a digit 0 through 9, *, #, or a special function. All functions require two characters except Manual Digit Entry. Manual digit entry requires three characters. This allows virtually any domestic telephone number to be stored. For international dialing where more characters may be required, two separate list-items can be dialed back-to-back. This allows any destination to be reached.

List Access Codes for 2-Step Abbreviated Dialing

When a list access code is used to access a *second list item* for 2-step Abbreviated Dialing, the first digit of the access code *must be* either a ‘‘*’’ or a ‘‘#.’’ Otherwise, the switch would perceive the dialed access code as additional digits to outpulse in completing the call.

Attendant Consoles

The users of attendant consoles do not have access to the Abbreviated Dialing feature. An attendant cannot access the system list, a group list, or a personal list. Also, automatic dialing buttons cannot be assigned to an attendant console. There are two System 85 features that serve to reduce attendant dialing. These features are Attendant Direct Extension Selection and Attendant Direct Trunk Group Selection.

Abbreviated Dialing and Restricted Numbers

During the programming of an automatic dialing button or an Abbreviated Dialing list item, the switch does not check the programmed number for validity. Therefore, numbers that are restricted to

a user can be programmed in the usual manner. However, when a call is placed using the Abbreviated Dialing feature, the switch performs the necessary validity checks, and when necessary, denies the call while the programmed digits are being outpulsed.

Blocked Feature Dial Access Codes

While feature dial access codes can generally be dialed using the Abbreviated Dialing feature, the Abbreviated Dialing feature dial access codes (90 through 94) are specifically blocked. These codes can be programmed into the abbreviated dialing lists and buttons. However, when they are used, they are blocked by the switch (intercept tone is returned). This is to avoid the possibility of recursive feature activation.

Button-Stored and List-Stored Automatic Dialing

The following items should be considered before deciding on whether to assign a button-stored or list-stored number:

- It is more economical (i.e., saves memory space) to assign the numbers to Automatic Dialing buttons than to an Abbreviated Dialing list.
- If the desired number already exists in the system list or in a group list, it would be wasteful to use button-stored Automatic Dialing. It would be better to use list-stored Automatic Dialing to point to the list and item of the existing stored number. The user must have access to the list in order to use this method.

Shared Extensions

Multiappearance voice terminals and straight line sets can share extension numbers on System 85. Specifically, the images of an extension's appearance(s) can reside on more than one voice terminal.

In Version 3 and earlier switches, one of these terminals (possessing an image of every appearance) is assigned as the primary or ''home'' terminal for the extension. The Abbreviated Dialing lists for such an extension can only be accessed from the home voice terminal.

In Version 4, each terminal can have its own Abbreviated Dialing list(s), and ''home terminal'' status is not a factor. All extensions assigned to a terminal can access that terminal's list(s). Other appearances of the same extension (on different terminals), however, cannot access these lists.

Manual Digit Entry

Users must be aware of the dialing requirements in order to use the Mnn function properly. In most cases, the stored number will have only one application where a fixed number of manual digits are used. This will avoid any confusion that may arise when attempting to use the stored number in some other way.

- Dialing fewer than the designated number of digits (<nn)

  The ''#'' must be dialed to indicate end-of-dialing. Otherwise, the interdigit timer will time out, and the user receives reorder tone.

- Dialing more than the requested number of digits (>nn)

  If the user dials more than the specified number of manual digits, the extra digits will be dialed at the end of the stored number string, regardless of where in the string the Mnn encode appears. In most cases these extra digits are ignored since the destination usually expects only a certain number of digits and terminates digit collection when this number is reached.

Hard and Soft Processor Swaps

The contents of the system list, group lists, and personal lists are stored in a translation portion of switch memory. Therefore, these lists endure a hard processor swap.

Stable calls placed using the Abbreviated Dialing feature endure a hard swap.

If a voice terminal user is changing a list item when a hard swap occurs, the list item remains unchanged after the hard swap.

The Abbreviated Dialing feature operates normally during a soft processor swap.

INTERACTIONS WITH OTHER FEATURES

The following System 85 features affect or are affected by the operation of this feature.

Call Vectoring

In addition to System List availability which is authorized separately, the Abbreviated Dialing feature permits voice terminal users to access a maximum of two Abbreviated Dialing lists: two group lists, two personal lists, or one group list and one personal list. The vector-group list counts as one of these abbreviated dialing lists. Therefore, if a voice terminal user is designated as the controller of the vector-group list, that user can have access to only one other personal or group list.

Call Vectoring group-list items *must not* contain special function characters (e.g., pause, wait, and mark). The ARS and AAR features automatically control the timing for routing calls to the destinations of ‘‘route to’’ commands.

Centralized Attendant Service

A backup voice terminal user cannot extend a call using the Abbreviated Dialing feature.

Data Call Setup

Using keyboard dialing, Abbreviated Dialing can be used to originate data calls. In switches prior to Release 2, Version 4, Abbreviated Dialing lists were assigned based on extension numbers. So, data terminals could have their own Abbreviated Dialing lists. In Release 2, Version 4, Abbreviated Dialing lists are assigned based on equipment locations. So, data terminals must share the Abbreviated Dialing lists of their associated voice terminals.

Display—Voice Terminal

When AD (Automatic Dial) Buttons or list based Abbreviated Dialing is used on a terminal with display capability, the stored number is displayed. If the names data base is loaded for the number, the associated name immediately replaces the number on the display.

If the stored number includes a security code, such as a password or authorization code, this code will also be displayed unless it is protected in the list by the *suppress function code*. If the suppress function code is used, the protected characters (except ‘‘*’’ or ‘‘#’’) will be replaced on the display by ‘‘s’’ indicating a character has been suppressed. The suppress function code is available on Version 3 and later switches.

For versions before Version 3, the manual digit entry function can be used to protect security codes. When manual digit entry is used, an underscore ‘‘_’’ is displayed rather than the digits entered.

Beginning with the R2 V3 (Issue 1.2 tape), a user can press an AD button while the voice terminal is on-hook, to display the stored number for that button. The display shows ‘‘AD=stored number.’’

Beginning with R2 V4, if the AD button point to an Abbreviated Dialing list item (system, group, or personal list), the display shows the contents of the list item.

Extension Number Steering

Extension Number Steering allows from one to four steering digits to be associated with a trunk-group or feature dial access code for call routing within a Main/Satellite complex. Abbreviated Dialing can use these steering digits (as stored numbers) to access a trunk group or a feature (from a terminal at a local or a distant switch within the complex). However, these steering digits cannot be used as controlling extension numbers for abbreviated dialing lists. This is because the steering digits, rather than being actual extension numbers, represent trunk or feature dial access codes.

Hot Line

Abbreviated Dialing must be provided in order to provide Hot Line, since Hot Line is implemented using a personal list.

IPA (Interpartition Access)

Abbreviated Dialing list items are not checked for legality at the time they are entered. Illegal list items are accepted into the list, but calls to these illegal numbers are denied when the digits are outpulsed by the switch. When a user attempts to use Abbreviated Dialing to place a call over another partition’s trunk group or to an extension in another partition group, the switch returns intercept treatment to the calling party.

Last Number Dialed

The LND (Last Number Dialed) feature does not store and redial the digits stored behind an Automatic Dialing button. Instead, the previous manually dialed digits are stored. The Automatic Dialing call can be redialed by pressing the Automatic Dialing button again.

The LND feature does not store and redial Abbreviated Dialing list-access calls. If a voice terminal user presses the List Access button or dials a List-Access code, the subsequently dialed digits are ignored by the LND feature. Instead, the LND feature will redial the previous manually dialed digits.

The LND feature can be used in conjunction with the Abbreviated Dialing feature. For example, a user could manually dial a trunk-group access code and then press an Automatic Dialing button to call a public-network telephone. If the user receives busy tone, this call can be retried by pressing LND button and then pressing the Automatic Dialing button. However, when the LND feature is used in conjunction with Abbreviated Dialing, the LND feature only stores and redials the digits that *precede* the Abbreviated Dialing access.

Personal CO (Central Office) Lines

The Abbreviated Dialing feature can be used to place calls over Personal CO lines that are administered as ‘‘rotary out.’’

The Abbreviated Dialing feature cannot be used to place calls over Personal CO lines that are administered as ‘‘touch-tone out.’’ In this case, the serving CO scans Personal CO lines to detect an off-hook signal. After the CO recognizes an off-hook, the CO returns dial tone to the calling party. System 85 software is not involved in this call-origination process. So, during the process, the System 85 does not invoke an originating register. Without this register, the System 85 cannot outpulse the stored digits.

Remote Access

When ‘‘Global’’ access is granted to the System List, Remote Access users as well as local terminal users can use the System List. This is a change that applies to Release 2, Version 4 switches, and can be made available to Version 3 switches.

Tenant Services

Abbreviated Dialing list items are not checked for legality at the time they are entered. Illegal list items are accepted into the list, but calls to these illegal numbers are denied when the digits are outpulsed by the switch. When a user attempts to use Abbreviated Dialing to place a call over another partition's trunk group or to an extension in another partition, the switch returns intercept treatment to the calling party.

A voice terminal user from any partition can access the system list, but the switch will only allow completion of calls that are consistent with the dialing capability of that user's partition.

Each partition can have a group list that every voice terminal user in the partition can access. This would provide the equivalent of the system list on a per-partition basis. Again, the switch will deny calls using list items that are not consistent with a partition's dialing capabilities.

Touch-Tone Calling Senderized Operation

The Touch-Tone Calling Senderized Operation feature is a prerequisite for implementing Abbreviated Dialing.

Variable Format Call Detail Recording

Outgoing calls made by this feature are recorded just as if the stored number had been manually dialed.

HARDWARE REQUIREMENTS

None.

FEATURE ADMINISTRATION

Assignment of the Abbreviated Dialing feature is on a per-system and per-terminal basis. The customer can partially administer this feature using the SMT (System Management Terminal) or the TCM (Terminal Change Management) feature. The feature can also be administered using CSM (Centralized System Management).

The following are the applicable MAAP and SMT procedures.

MAAP AND SMT PROCEDURES — ABBREVIATED DIALING			
PROCEDURE	**WORD**	**PURPOSE**	**SMT**
059	1	Assigns access to the system list, access to a group list, and assigns personal lists to voice terminals. Assigns the list size and list controller for group/personal lists.	Yes
059	2	Assigns list-stored numbers.	Yes
059	3	Assigns the list-access and special function buttons to voice terminals.	Yes
059	4	Assigns button-stored numbers to voice terminals.	Yes
059	5	Displays the amount of space in the switch for additional lists.	Yes
275	3	Enables system-wide access to the system list. Also assigns the system-list size.	Yes
350	1	Assigns the first digit of the Abbreviated Dialing feature access codes (if required).	No
350	2	Assigns the dial access codes for the Abbreviated Dialing feature. The applicable encodes are as follows: 90 Dial the system (global) list—touch-tone terminal 91 Dial list A—touch-tone terminal 92 Dial list B—touch-tone terminal 93 Program auto dial number or list 94 Dial the system list—rotary terminal 95 Dial list A—rotary terminal 96 Dial list B—rotary terminal.	No

The following are the applicable TCM path names used with the AP 16.

TCM SCREENS — ABBREVIATED DIALING	
PATH NAME	**PURPOSE**
terminal-change extensions attributes	Assigns access to group list(s), personal list(s), and the system list to an extension number.
terminal-change group abbreviated dialing	Assigns the size of a list and list-stored numbers.
terminal-change system parameters (select the List-Administration option)	Enables system-wide access to the system list.
terminal-change terminal buttons	Assigns the Abbreviated Dialing feature buttons to voice terminals.

The following are the applicable CSM Command Paths utilizing the **admin** area of TCM or FM.

CSM SCREENS — MASKS ABBREVIATED DIALING		
APPL'N	**OBJECT**	**PURPOSE**
TCM	abbreviated-dial-lists	Defines the abbreviated dialing capabilities (personal, group, list access, personal and group list size, and group list owner) and default terminal dialing (System 85 R2 V3, V4) of a DTDM. (System 85 R2 V4) If call vectoring is present, use **vector-abbr-list** to administer abbreviated dial lists designate for use by call vectors.
TCM	abbr-list-entries	This command adds, changes, or removes an abbreviated dialing list member or a default terminal dialing entry. List entries can be changed on the following: • Personal list • Group list • System list. Abbreviated dial list entries are associated with an Equipment Line Location (ELL) instead of an extension number. If call vectoring is present, this command is used to change entries on the vector abbreviated dial list.
TCM	36-button	Assigns a 7205H, 7405D, or 7305S 36-button multifunction voice terminal. Defines terminal attributes (such as set color, set mount, equipment adjuncts) and button feature assignments. Assigns a DTDM as well as Display Module buttons.
TCM	12-button	Assigns a 7203H, 7403D, or 7303S 12-button multifunction voice terminal. Defines terminal attributes (such as set color, set mount, equipment adjuncts) and button feature assignments. Assigns Abbreviated Dialing capabilities and default terminal dialing. Assigns a DTDM to a 7403D voice terminal.
TCM/FM	sys-cos	Enables system-wide access to the system list, and also assigns the system-list size.
TCM/FM	first-digit	Assigns the first digit of the access codes (if required).
TCM/FM	dial-access-codes	Assigns the dial access codes for this feature.

ACCUNET® SERVICE INTERFACE

DESCRIPTION

This feature provides an interface between the System 85 switch and the AT&T Communications ACCUNET Switched 56 Service. ACCUNET Service Interface uses is similar to the DS1 Interface feature, with a special in-band signaling mode to provide 56 Kbps access to ACCUNET Switched 56 Service. Unlike standard in-band (robbed bit) signaling used with the DS1 feature (voice grade service), neither Data Preindication (the Data Call Setup feature), nor a Modem Pooling conversion resource are needed for data communications over this service.

ACCUNET Switched 56 Service

ACCUNET Switched 56 Service is a switched 56 Kbps, digital end-to-end, public (subscriber) networking service, available from AT&T Communications. This service may or may not require local CO (Central Office) switching functions. The specific requirements vary from one region to another. If *AT&T Special Access* (direct access) is available, there may be some economic advantage to connecting directly into the AT&T Communications network. Evaluation of this option must be made on a case-by-case basis.

For many users, with a part time requirement for high-speed (56 Kbps) data or other wide band carrier services, the AT&T ACCUNET Switched 56 Service offers an attractive alternative to a dedicated, full-time facility. The ACCUNET Switched 56 Service offers billing on a use and distance basis rather than having to pay for a full-time facility that is only used part time.

Feature History and Development

This feature was first available on System 85 in Release 2, Version 3.

USER OPERATIONS

Access to the ACCUNET Service Interface feature is via Voice Terminal Dialing procedures from the Data Call Setup feature. Some special settings are required on the data module (MPDM/ACCUNET). An ACU (Automatic Calling Unit) can also be used to place an ACCUNET call. Keyboard dialing procedures from the Data Call Setup feature cannot be used with the ACCUNET Service Interface feature. Applicable user operations are as follows:

Setting the Data Module:

- Set the ANET option switch to ON.
- Set the Data Rate selection wheel to 56K.

Placing an ACCUNET Service Call From a Voice Terminal:

- At the originating voice terminal, go off-hook. [Local dial tone]
- Dial the ACCUNET Service Interface access code and network number.
- If One Button Transfer is available:
  - — Press the appropriate DATA button.

    or
- If One Button Transfer is not available:
  - — Press TRANSFER.
  - — Dial the extension number for the data module to be used.
  - — Press TRANSFER again.
  - — Go on-hook.

CONSIDERATIONS

Billing Provisions

For billing purposes, one listed directory number must be assigned to the ACCUNET Service Interface feature.

INTERACTIONS WITH OTHER FEATURES

The following System 85 features affect or are affected by the operation of this feature.

Data Call Setup

The Voice Terminal Dialing option of the Data Call Setup feature is used to access the ACCUNET Switched 56 Service network.

Keyboard dialing, as described in the Data Call Setup feature, does not work for ACCUNET Service calls.

DMI (Digital Multiplexed Interface)

The DMI feature **BOS version is not compatible** with the ACCUNET Service Interface feature.

The DMI feature **MOS version is compatible** with the ACCUNET Service Interface feature, **at data rates of 56 Kbps or less**. However, the DMI feature is capable of operating at data rates up to 64 Kbps. Above 56 Kbps, ACCUNET Service Interface and DMI MOS are not compatible.

Host Computer Access

The Host Computer Dialing functionality of the Host Computer Access feature cannot be used to place calls through the ACCUNET Service Interace feature. This is because host computer dialing uses the keyboard dialing function of the Data Call Setup feature and keyboard dialing data call setup is not compatible with ACCUNET Service Interface.

ISDN (Integrated Services Digital Network) PRI (Primary Rate Interface)

The ACCUNET Service Interface feature works with the ISDN/PRI feature through the *interworking* function. ACCUNET Switched 56 Service does not support ISDN/PRI as such. Interworking is described in some detail in the ISDN/PRI feature. There is, however, one case where a problem can be encountered. ACCUNET Service calls are limited to a maximum data rate of 56 Kbps. There is no problem processing such calls through the System 85 switch and on to ISDN facilities. ISDN calls can run at data rates as high as 64 Kbps. If an ISDN call is received that is using a data rate higher than 56 Kbps, it cannot be passed to ACCUNET Service facilities and is blocked by the System 85 switch.

HARDWARE REQUIREMENTS

The ACCUNET Service Interface feature requires the following additional or special hardware.

- DS1 Interface Unit, consisting of:
  - — DS1/73 Series Port Carrier

    Each DS1/73 series port carrier can accommodate two DS1 circuit packs.
  - — ANN-11(C, D, or E) Circuit Pack

    Each ANN-11 circuit pack supports one 24-channel DS1 interface. For ACCUNET Service Interface applications, the ANN-11 is set up for DMI operation using bit robbed signaling.
  - — TN463 (B or C) SCS (System Clock Synchronizer).
- MPDM/ACCUNET (Modular Processor Data Module / ACCUNET)

  When an ACU is to be used, the MPDM/1 is configured with an RS-366 interface.
- ACU (Automatic Calling Unit)

  An ACU can be used to place ACCUNET calls. This item is optional for the ACCUNET Service Interface feature.

FEATURE ADMINISTRATION

Assignment of the ACCUNET Service Interface feature is on a per-system basis and by trunk group within the switch. This feature is administered using the MAAP (Maintenance and Administration Panel). The customer can partially administer this feature using the SMT (System Management Terminal). This feature can also be administered used CSM (Centralized System Management).

The following are the applicable MAAP and SMT procedures.

MAAP AND SMT PROCEDURES — ACCUNET SERVICE INTERFACE

PROCEDURE	WORD	PURPOSE	SMT
100	1	Assigns trunk-group dial access code, trunk type, route advance, dial access restriction. Trunk types 108 or 109 must be used for ACCUNET Service Interface.	No
101	1	Assigns trunk-group translations (e.g., use of battery reversal, signaling, SMDR) and assigns a trunk group as AVD (tie and OPX only). For ACCUNET Service Interface, rotary dial signaling must be specified.	No
103	—	Assign trunk group translations for network trunks (e.g., Data Protection, FRL, Bridge-On).	Yes*
115	1	Assigns trunk group termination.	No
116	1	Assigns trunks to a DS1 Channel, disables signaling for channels that use robbed bit signaling.	No
150	1	Assigns trunk circuits to trunk groups.	No
250	—	Assigns the SCS circuit to either the Module Control Carrier (single-module switch) or the Time Multiplexed Switch Carrier (multimodule switch).	No
260	1	Assigns DS1 circuits to equipment locations and assigns signaling requirements and other circuit characteristics. For ACCUNET Service Interface, Robbed Bit Signaling (1 in Field 8) and trunks/mixed application type (0 in Field 14) are required.	No
275	1	Assigns system class-of-service features.	Yes
275	2	Assigns system class-of-service features (Remote Access).	Yes
290	1 & 2	Displays DS1 trunk interface and SCS circuit assignments (equipment locations) and identification information.	Yes

* Display only procedure for the SMT.

The following is the applicable TCM path name used with the AP 16.

TCM SCREEN — ACCUNET SERVICE INTERFACE	
PATH NAME	**PURPOSE**
terminal-change terminal equipment	Assigns an extension number to the DS1 Interface. The DS1 Interface must first be assigned to an equipment location by the installer.

The following are the applicable CSM Command Paths utilizing the **admin** area of TCM or FM.

CSM SCREENS — MASKS ACCUNET SERVICE INTERFACE		
APPL'N	**OBJECT**	**PURPOSE**
FM	trk-grp	Assigns trunk group dial access code, trunk type, Route Advance, and dial access restriction. Assigns trunk group translations, and assigns a trunk group as AVD. For ACCUNET Service Interface, rotary dialing must be specified. Assigns trunk group translations for network trunks (e.g., Data Protection, FRL, and Bridge-On). This command also assigns trunk circuits to trunk groups, assigns trunks to DS1 Channel and ISDN trunks, and disables signaling for channels that use robbed-bit signaling.
FM	term-trk-grps	Assigns trunk group terminations.
FM	trk	Assigns trunk circuits.
FM	ds1-ckt-pack	Assigns the SCS circuit to either the (Module Control Carrier (single module system) or the Time Multiplexed Switch Carrier (multimodule system).
FM	ds1-isdn	Assigns DS1 (Digital Service-1) interface circuit pack parameters to a switch, permitting administration of DS1 facilities. For ACCUNET Interface, Robbed Bit Signaling and trunks/mixed application type are required.
TCM/FM	sys-cos	Changes the system class-of-service feature, and changes the barrier code used for Remote Access.
FM	system inventory report	Provides a report for the DS1 interface and SCS circuit assignments (equipment locations) and identification information.

ADVANCED PRIVATE LINE TERMINATION

DESCRIPTION

The APLT (Advanced Private Line Termination) feature provides access to and termination from the following private line networks:

- CCSA (Common Control Switching Arrangement)
- EPSCS (Enhanced Private Switched Communications Service).

This feature allows network inward dialing and direct outword dialing to distant network locations.

These private networks provide call routing over dedicated facilities. Based on the network numbering plan, on-network calls are routed to terminals or attendants within the network. Private networks can optionally provide off-network calling to a desired destination based on the 7- or 10-digit public network number.

EPSCS Networks

If the private network is an EPSCS network, services may include tandeming through the distant switch to available outgoing trunks such as local CO (Central Office), FX (Foreign Exchange), or WATS (Wide Area Telecommunications Service) Access trunks as well as to on-net terminals. When an EPSCS network is used, an authorization code is sometimes needed to complete the network call. This requires dialing additional digits after the outgoing trunk is seized. Based on the authorization code, the network either denies or completes the call.

CCSA Networks

If the private network is a CCSA network, tandeming through the distant switch is not possible. With a CCSA network, attendant assistance is required to pass a call through a distant switch to a second distant switch. In this type of network, authorization codes are not generally used because of the intervention of attendants when extended calling services are required.

Attendant positions are assigned network LDNs (Listed Directory Numbers) that are different from the public network LDNs. Network LDNs consist of the private network office code and any 2-, 3-, 4-, or 5-digit number in the dialing plan including 01, 011, 0111, and 01111. Incoming attendant-seeking calls are identified as network calls by the Attendant Display feature.

Incoming network calls are processed the same as a DID (Direct Inward Dialing) call. Active features at the called terminal such as Call Forwarding, Call Waiting, etc., operate as usual (see Feature Interactions for exceptions).

Feature History and Development

This feature was first available with System 85 in Release 1. At that time, it was part of the Private Network Access feature. It was reintroduced under the name Advanced Private Line Termination in Release 2, Version 3. No other changes have been made.

USER OPERATIONS

The following are the user operating procedures for this feature.

Direct Outward Dialed Network Calls:

- Dial the network access code. [Network Dial Tone]
- Dial the destination code as defined by the network dialing plan. For example:
  a. Network service access code (usually 3-digits)
  b. A 7- or 8-digit destination number for an on-network call
  c. A 10-digit destination number for an off-network call.
- If an authorization code is required, dial the network authorization code. [Call-progress tone, i.e., ringback tone]

Outward Dialed Network Calls Via Tie Trunk to Main:

- Dial the tie trunk access code. [Dial tone]
- Dial the network access code if required. [Network dial tone]
- Dial the destination code as defined by the network dialing plan.
- If an authorization code is required, dial the network authorization code. [Call-progress tones, i.e., ringback tone, busy tone, etc.]

Incoming Attendant Seeking Network Calls:

- Obtain destination information from calling party (ICI identifies the call as a network call).
- Extend the call by using DXS or Attendant Direct Trunk Group selection features,

  or

- Press START (calling party put on hold). [Dial tone]
- Dial the desired extension number or trunk group access code.
- Press RELEASE (calling party hears call-progress tones). [Attendant dropped from connection.]

  or

- If further attendant assistance is needed, press HOLD. [Call is held on the console.]

CONSIDERATIONS

Access Codes

The APLT feature is usually implemented through the AAR (Automatic Alternate Routing) or ARS (Alternate Route Selection) features. When AAR/ARS is used, a separate network or trunk access code is not required.

RESTRICTING FEATURE USE

Individual terminal access to this feature and access to individual terminals via this feature can be restricted by the Voice Terminal Restrictions feature and the Attendant Control of Voice Terminals feature.

Access to private line trunk facilities can also be restricted by using the following:

- Attendant Control of Trunk Group Access
- Authorization Codes
- Facilities Restriction Levels
- Miscellaneous Trunk Restrictions
- Trunk-to-Trunk Restrictions.

INTERACTIONS WITH OTHER FEATURES

Bridged Call

The APLT Restriction is assigned to a class of service in Procedure 010, Word 3. The class of service is then assigned to an extension in Procedure 000, Word 1. When the APLT Restriction is assigned to a *shared extension*, the restriction applies to every image of the extension.

CMDR (Centralized Message Detail Recording)

See the Variable Format CDR interaction.

SMDR (Station Message Detail Recording)

See the Variable Format CDR interaction.

Variable Format Call Detail Recording

- Incoming Tie Trunk Calls

  If the caller dials an account code and then calls across a tie trunk to an attendant on another network node, the account code is recorded at originating node only. The attendant at the terminating node can enter the account code, as requested by the caller, to record the account code at the terminating node.

- Outgoing Tie Trunk Calls

  If the caller dials a CDR account code and then calls the attendant, the account code is dropped. The attendant can reenter the account code before extending the call across the tie trunk.

HARDWARE REQUIREMENTS

The following specific hardware items are required to implement this feature:

- SN233 Release Link Trunk Circuit Pack (four circuits per circuit pack)

  Trunk types 12 and 13 are used for wink start with dial tone, delay dial with dial tone, or dial tone operation. Trunk types 14 and 15 are used only for through dial operation.

FEATURE ADMINISTRATION

Assignment of the APLT feature is on a per-system basis using the MAAP (Maintenance and Administration Panel). The customer can partially administer this feature using the SMT (System Management Terminal), the TCM (Terminal Change Management) feature, or the FM (Facilities Management) feature. This feature can also be administered using CSM (Centralized System Management).

The following are the applicable MAAP and SMT procedures.

MAAP AND SMT PROCEDURES — ADVANCED PRIVATE LINE TERMINATION

PROCEDURE	WORD	PURPOSE	SMT
010	3	Assigns miscellaneous trunk restriction group, APLT off-net permissions, and FRL to a line class of service.	Yes
100	1	Assigns dial access code and route advance to trunk groups.	No
101	1	Assigns trunk characteristics such as APLT features allowed and SMDR to private network trunk groups.	No
102	—	Assigns a trunk dial access code to a trunk restriction group.	Yes
103	—	Assigns network features associated with a trunk group including FRL.	Yes*
110	—	Assigns a restricted dial code entry number to a dial access code.	No
111	—	Assigns a restricted dial entry code to a trunk group.	No
150	—	Assigns private network trunks to equipment locations.	No
275	1	Assigns system class of service and features such as automatic identification of outward dialing, tandem tie-trunk switching, and trunk-to-trunk connections.	Yes
350	1 & 2	Assign feature dial access codes as required.	No

* Display only procedure for the SMT.

The following are the applicable TCM path names used with the AP 16.

TCM SCREENS — ADVANCED PRIVATE LINE TERMINATION	
PATH NAME	**PURPOSE**
terminal-change class-of-service attributes	Assigns miscellaneous trunk restrictions to a line class of service. These restrictions include: Inward, Outward, and Full. This screen also assigns an FRL to a line class of service and APLT on or off.

The following are the applicable FM path names used with the AP 16. A printed report of the displayed information can also be generated.

FM SCREENS — ADVANCED PRIVATE LINE TERMINATION	
PATH NAME	**PURPOSE**
facilities-mgmt routing conversion	Displays and changes the correspondence between a private network location code and the public network telephone number that routes to that location code (refer to the ARS feature description for an explanation of 10-Digit Conversion). Either the location code or the public network destination code (telephone number) can be entered, and the corresponding values are displayed.
facilities-mgmt facility-restriction	Displays and assigns FRLs to extensions, incoming tie trunks from subtending switchs, and authorization codes. Also assigns network access to authorization codes.

The following are the applicable CSM Command Paths utilizing the **admin** area of TCM or FM.

CSM SCREENS — MASKS ADVANCED PRIVATE LINE TERMINATION		
APPL'N	**OBJECT**	**PURPOSE**
TCM	class-of-service	Assigns miscellaneous trunk restriction group, APLT off-net permissions, and FRL to a line class of service.
TCM/FM	sys-cos	Assigns system class of service and and features such as automatic identification of outward dialing, tandem tie-trunk switching, and trunk-to-trunk connections.
TCM/FM	first-digit	Administers the first dialed digit of the dialing plan.
TCM/FM	dial-access-code	Administers a feature DAC (Dial Access Code) associated with a terminal feature.
FM	trk-grp	Assigns dial access code and route advance to trunk groups. Assigns trunk type, trunk group number and dial access restrictions. Assigns trunk characteristics such as APLT features allowed and SMDR to private network trunk groups. Assigns network features associated with a trunk group including FRL. Assigns Dial Code Entry No.(s) for: tandem tie trunks, trunk-to-trunk, tandem tie or trunk-to-trunk restrictions. Assigns private network trunks to equipment locations.
FM	misc-trk-rst-grp	Associates trunk groups to Miscellaneous Trunk Restriction Groups.
FM	tandem-trk-grp	Associates trunk group DACs with restricted dial code entry numbers for the tandem-tie feature and the trunk-to-trunk connection feature. Also restricts other trunk groups on the switch from using these restricted facilities.

ATTENDANT AUTO-MANUAL SPLITTING

DESCRIPTION

This feature allows an attendant to privately identify the calling party to the called voice terminal user. The caller is automatically ‘‘split away’’ from the attendant and the called party when the attendant presses either the START or a DXS (direct extension selection) button. The feature is activated manually by pressing the SPLIT button provided on the attendant console. Pressing the SPLIT button changes the condition from split to unsplit or from unsplit to split.

A split condition remains in effect until the attendant manually removes the split condition or one of the parties disconnects.

Feature History and Development

This feature was first available on System 85 in Release 1. There have been no changes to this feature since its introduction.

USER OPERATIONS

The following are the user operating procedures for this feature.

To Automatically Split From a Call:

- Be sure there is a 2-way connection.
- Press START,

  or
- Press a DXS (direct extension selection) button.

To Manually Split From a Call:

- Be sure there is a 2-way connection.
- Press SPLIT.

To Cancel a Split Condition

If the called voice terminal is busy or the called party refuses the call:

- Press the CANC button.

If the called party accepts the call:

- Press the RELEASE button.

If the called party accepts the call and the attendant wishes to handle a subsequent call:

- Press another loop button.

If the calling party has requested use of the Serial Calls feature:

- Press the HOLD button.

If the attendant is needed for further assistance during the call:

- Press the SPLIT button to allow the attendant and both parties to converse.

CONSIDERATIONS

Called Party Splitting

Splitting of the called party from the attendant and the calling party is not allowed.

INTERACTIONS WITH OTHER FEATURES

The following System 85 features affect or are affected by the operation of this feature.

Centralized Attendant Service

Manual splitting is inactive. The SPLIT lamp and button do not function on release link trunk calls.

Malicious Call Trace

If an attendant activates Malicious Call Trace while a calling party is split from the console, the split condition is disabled. On the attendant console, the split lamp goes out. For the previously split party, the switch returns dial tone to an internal caller or disconnects an outside caller from the switch.

Privacy—Attendant Lockout

The Attendant Lockout feature overrides the Attendant Auto—Manual Splitting feature, and the SPLIT button becomes nonfunctional. Privacy is essentially a form of splitting that prevents the attendant from bridging onto a talking connection. The Attendant Lockout feature does not override splitting; however, it denies the attendant the ability to reenter an established connection held on the console position, unless recalled by a voice terminal. Attendant Recall Privacy works with the Splitting feature to cause automatic splitting. Manual splitting/unsplitting is disabled.

Serial Calls

If the Serial Calls feature is provided, the call is not split when an attendant presses the HOLD button to hold the call on the console.

HARDWARE REQUIREMENTS

None.

FEATURE ADMINISTRATION

Assignment of the Attendant Auto-Manual Splitting feature is on a per-system basis. This feature is administered using the MAAP. This feature can also be administered using CSM (Centralized System Management).

The following is the applicable MAAP procedure.

MAAP PROCEDURE — ATTENDANT AUTO-MANUAL SPLITTING		
PROCEDURE	**WORD**	**PURPOSE**
203	1	Assigns the SPLIT button to the attendant console(s). The applicable encode is as follows: 4 SPLIT Button.

The following is the applicable CSM Command Path utilizing the **admin** area of TCM or FM.

CSM SCREEN — MASK ATTENDANT AUTO-MANUAL SPLITTING		
APPL'N	**OBJECT**	**PURPOSE**
TCM	control-keys	Assigns the SPLIT button to the attendant console(s).

ATTENDANT CALL WAITING

DESCRIPTION

This feature allows a call to wait when an attendant extends that call to a busy single-appearance voice terminal. Allowing that call to wait limits the attendant work load by reducing the number of re-try attempts to a busy extension.

Two bursts of distinctive tone signal the busy terminal user that a call is waiting. The busy terminal user can answer the call by momentarily pressing the switchhook and dialing the answer-hold access code or by going on-hook. This allows a single-appearance voice terminal to function like two terminals. An individual who is busy on a 2-party call can be alerted to the arrival of another call, and can answer the call if desired.

Feature History and Development

This feature was first available on System 85 in Release 1. There have been no changes to this feature since its introduction.

USER OPERATIONS

The following are the user operating procedures for this feature.

To Process an Incoming Call

By the attendant to a busy voice terminal without DXS buttons:

- Attendant receives a call. [ATND lamp lights, and ICI display lights.]
- Press the appropriate loop button. [PA lamp goes out. The attendant and calling party are connected.]
- Press START. [SPLIT lamp lights, the calling party is split away from the attendant, and dial tone is heard.]
- Dial the called voice terminal's extension. (The called voice terminal is busy.) [Confirmation tone is heard, the BUSY lamp lights, the SPLIT lamp goes out, and the attendant is reconnected to the calling party.]
- Press RELEASE. (The calling voice terminal's call becomes a waiting call.) [The called voice terminal user hears the 2-burst tone, ATND lamp goes out, ICI display goes out, and timed reminder begins. If no calls are waiting, the PA lamp lights.]

- The called party goes on-hook. [Busy lamp goes out, RING lamp lights, the waiting party hears ringback tone, and the called party hears 2-burst ringing.]
- The called party goes off-hook. [RING lamp goes out, and the calling and called parties are connected. The ANSWER lamp lights if the attendant is in the connection.]

By the attendant to a busy voice terminal with DXS buttons:

- Attendant receives a call. [ATND lamp lights, and ICI display lights.]
- Press the appropriate loop button. [PA lamp goes out. The attendant and calling party are connected.]
- Press the associated DXS/BLF selection button. [SPLIT lamp lights, the calling party is split away from the attendant, and dial tone is heard.]
- Press the appropriate DXS button. (The called voice terminal is busy.) [Confirmation tone is heard, the BUSY lamp lights, the SPLIT lamp goes out, and the attendant is reconnected to the calling party.]
- Press RELEASE. (The calling voice terminal's call becomes a waiting call.) [The called voice terminal user hears the 2-burst tone, ATND lamp goes out, ICI display goes out, and timed reminder begins. If no calls are waiting, the PA lamp lights.]
- The called party goes on-hook. [Busy lamp goes out, RING lamp lights, the waiting party hears ringback tone, and the called party hears distinctive (2-burst) ringing.]
- The called party goes off-hook. [RING lamp goes out, and the calling and called parties are connected. The ANSWER lamp lights if the attendant is on the connection.]

CONSIDERATIONS

Call Waiting Tone

The Call Waiting tone is two 100-millisecond, 400-hertz beeps.

Attendant Call Waiting Limitations

Attendant Call Waiting is limited to single-appearance voice terminals within the switch Calls to multiappearance voice terminals route to idle appearances.

Attendant Call Waiting Denial

Attendant Call Waiting is denied when directed toward a busy single-appearance voice terminal that is not in a stable talking condition.

Hard and Soft Processor Swaps

If an attendant call or an attendant-extended call is waiting on a busy single-appearance terminal when a hard processor swap occurs, the waiting call does not endure the hard swap.

The Attendant Call Waiting feature operates normally during a soft processor swap.

INTERACTIONS WITH OTHER FEATURES

The following System 85 features affect or are affected by the operation of this feature.

ACD (Automatic Call Distribution)

Attendant calls to a local ACD split are not queued. The switch attempts to complete the call to an idle agent either by scanning the agent queue or by scanning the split. If no idle agents are found in the split, the call waits on the split supervisor's single-appearance terminal. When an attendant places a call to an individual ACD agent's single-appearance terminal and that terminal is busy, the call waits on the busy terminal when Attendant Call Waiting is provided.

Attendant calls cannot wait on an ACD agent's single-appearance voice terminal while an observer (using agent override) is connected to the agent's call.

Bridged Call

Attendant Call Waiting is partially allowed toward shared extensions with only one appearance. When only the straight line set is active on this type of shared extension, the switch allows an attendant call to wait. However, when a multiappearance terminal is active on the shared extension, Attendant Call Waiting is denied. The switch returns busy tone.

While an attendant extended call is waiting on a straight line set, a multiappearance voice terminal can be used to bridge onto the active call. However, the waiting call cannot be retrieved until the multiappearance voice terminal leaves the connection.

Attendant Call Waiting is denied toward shared extensions with more than one appearance. Instead, attendant calls are routed to an idle appearance (if available) of the shared extension. When every appearance is busy, the switch returns busy tone.

Busy Verification of Lines

An attempt to verify a terminal line via the Busy Verification of Lines feature takes precedence over the Attendant Call Waiting feature.

CDRR (Call Detail Recording and Reporting)

The CDRR feature records the called extension number, as well as the account code, if dialed, for attendant-assisted incoming calls using Attendant Call Waiting.

Call Forwarding—Busy and Don't Answer

When Call Forwarding—Busy and Don't Answer is active at the called voice terminal, the forwarding operation occurs before Attendant Call Waiting is allowed. There are four possible operations. If the originally called voice terminal is busy and the forwarded-to voice terminal is idle, attendant calls forward to and ring at the forwarded-to voice terminal. If the originally called voice terminal is busy and the forwarded-to voice terminal is busy, attendant calls forward to and wait on the forwarded-to voice terminal. If there is no answer at the originally called voice terminal and the forwarded-to voice terminal is idle, attendant calls forward to and ring at the forwarded-to voice terminal. If there is no answer at the originally called voice terminal and the forwarded-to voice terminal is busy, attendant calls continue ringing at the originally called voice terminal.

Call Forwarding—Don't Answer

When Call Forwarding—Don't Answer is active at the called voice terminal, the forwarding operation occurs before Attendant Call Waiting is allowed. There are two possible operations. If there is no answer at the originally called voice terminal and the forwarded-to voice terminal is idle, attendant calls forward to and ring at the forwarded-to voice terminal. If there is no answer at the originally called voice terminal and the forwarded-to voice terminal is busy, attendant calls continue ringing at the originally called voice terminal.

Call Forwarding—Follow Me

When Call Forwarding—Follow Me is active at the called voice terminal, the forwarding operation occurs before Attendant Call Waiting is allowed. There are two possible operations. Attendant calls forward to and ring at the forwarded-to voice terminal (if this voice terminal is idle). Otherwise, attendant calls forward to, and then wait on, the forwarded-to voice terminal (if this voice terminal is busy).

Call Park

When the Call Park feature is active on the called extension, Attendant Call Waiting is denied.

CMDR (Centralized Message Detail Recording)

Same as the SMDR interaction.

Conference—Attendant Six Party

Attendant Call Waiting is denied when an attendant is attempting to add a busy called party to a conference.

Data Protection

Attendant Call Waiting is denied when the Data Protection feature is active on a call.

DDC (Direct Department Calling)

Attendant calls to a DDC group are not queued. The switch scans the group in an attempt to find an idle terminal to complete the call. If no idle line is found in the group, the call waits on the controlling terminal if Attendant Call Waiting is provided. When an attendant places a call to a DDC individual terminal and that terminal is busy, the call waits on the busy individual terminal if Attendant Call Waiting is provided.

DCS (Distributed Communications System)

In a DCS environment, direct attendant calls and attendant extended calls to an EUCD split in another node are queued. However, for attendant extended calls, the attendant does not receive confirmation tone to indicate that the queue has been entered.

EUCD (Enhanced Uniform Call Distribution)

Attendant calls to a local EUCD split are not queued. The switch attempts to complete the call to an idle agent by scanning the split. If no idle agent is found in the split, the call waits on the split supervisor's terminal. When an attendant places a call to an EUCD individual terminal and that terminal is busy, the call waits on the busy individual terminal when Attendant Call Waiting is provided.

Hold

Attendant Call Waiting is denied when the Hold feature is active on the called extension.

Hunting

When a called terminal line is associated with a hunting group, hunting is performed before the call waiting is implemented. If an idle terminal is not found in the hunt path, the call waits on the originally called terminal.

Line Lockout

An attendant call is not allowed to wait on a voice terminal that has been locked out. The switch returns busy tone to the calling party.

Loudspeaker Paging

A call is not allowed to wait on a line that has accessed Loudspeaker Paging.

Music-on-Hold Access

When Attendant Call Waiting and Music-on-Hold are provided, a call released by the attendant to a busy single-appearance voice terminal is connected to music until the called party answers or the attendant reconnects to the waiting call.

Override

Override is not allowed toward a line that is waiting, but is allowed toward the 2-party call that has a call waiting.

Queuing

The callback sequence associated with ringback Queuing is delayed until there are no waiting calls.

Recorded Telephone Dictation Access

The Attendant Call Waiting feature is denied toward an extension with the Recorded Telephone Dictation feature activated.

SMDR (Station Message Detail Recording)

The SMDR feature records the called extension number, as well as the account code, if dialed, for attendant-assisted incoming calls using Attendant Call Waiting.

Tenant Services

A partitioned System 85 allows attendant calls to wait on local voice terminals, and always provides 2-burst tone for the called voice terminal. When allowed, 2-burst tone is provided for attendant calls directed to a voice terminal using the extension number. When allowed, 2-burst tone is also provided for attendant calls directed to a voice terminal using DXS (Direct Extension Selection).

Transfer

Attendant Call Waiting is denied toward an extension with the Transfer feature activated.

Trunk Verification—Attendant and Voice Terminal

If the trunk is being held or answered by a terminal using the answer-hold code of Attendant Call Waiting, Trunk Verification is denied.

UCD (Uniform Call Distribution)

Attendant calls to a UCD group are not queued. The switch scans the group in an attempt to find an idle terminal to complete the call. If no idle line is found in the group, the call waits on the controlling terminal if Attendant Call Waiting is provided. When an attendant places a call to a UCD individual terminal and that terminal is busy, the call waits on the busy individual terminal if Attendant Call Waiting is provided.

Variable Format Call Detail Recording

The CDR records the called extension number, as well as the account code, if dialed, for attendant-assisted incoming calls using the Attendant Call Waiting feature.

HARDWARE REQUIREMENTS

None.

FEATURE ADMINISTRATION

Assignment of the Attendant Call Waiting feature is on a per-system basis in the system class of service. The customer can administer this feature using the SMT (System Management Terminal). This feature can also be administered using CSM (Centralized System Management).

The following is the applicable MAAP and SMT procedure.

MAAP AND SMT PROCEDURE — ATTENDANT CALL WAITING			
PROCEDURE	**WORD**	**PURPOSE**	**SMT**
275	1	Assigns Call Waiting to the system class of service.	Yes

The following is the applicable CSM Command Path utilizing the **admin** area of TCM or FM.

CSM SCREEN — MASK ATTENDANT CALL WAITING		
APPL'N	**OBJECT**	**PURPOSE**
TCM/FM	sys-cos	Assigns Call Waiting to the system class of service.

ATTENDANT CONTROL OF TRUNK GROUP ACCESS

DESCRIPTION

This feature prevents voice terminal users from directly accessing selected trunk groups. If a voice terminal user dials a controlled trunk group, the call routes to an attendant. The attendant then decides, based on instructions from the switch administrator, whether to allow the call.

During high demand periods, efficient use of trunk groups can be increased by limiting access. For example, an attendant can control trunk-group usage during peak outgoing call demand periods and can allow access during other periods. This has the effect of allowing outgoing calls on a priority basis. Also, an attendant can control outgoing access on 2-way trunk groups during peak incoming call demand periods. This would have the effect of reserving 2-way trunk groups for incoming calls.

Feature History and Development

This feature was first available on System 85 in Release 1. There have been no changes to this feature since its introduction.

USER OPERATIONS

The following are the user operating procedures for this feature.

To Activate Control of a Trunk Group by the Attendant:

- Press an idle loop button. [PA lamp goes out.]
- Press START. [Dial tone]
- Dial the activation access code. [Second dial tone]
- Dial the trunk-group access code,

  or

- Press the appropriate trunk-group selection button. [The corresponding ‘‘CONT’’ lamp lights, and the switch returns confirmation tone.]
- Press RELEASE.

To Deactivate Control of a Trunk Group:

- Press an idle loop button. [PA lamp goes out.]
- Press START. [Dial tone]
- Dial the deactivation access code. [Second dial tone]
- Dial the trunk-group access code,

  or

- Press the appropriate trunk-group selection button. [The corresponding ‘‘CONT’’ lamp goes out, and the switch returns confirmation tone.]
- Press RELEASE.

CONSIDERATIONS

Maximum Application

This feature can be activated for any trunk group assigned to a trunk-group selection button with an associated control lamp. There are 12 trunk-group selection buttons with associated lamps. Therefore, access can be controlled to a maximum of 12 trunk groups.

CONF Button

The CONF button also uses a trunk-group selection button. Therefore, when the Conference—Attendant Six Party feature is provided, access can be controlled to a maximum of 11 trunk groups.

Hard and Soft Processor Swaps

ACTGA activations are stored in a status portion of switch memory. Therefore, if an attendant activates control of a trunk group before a hard processor swap, the trunk group will not be controlled after the hard swap is finished. At this time, the attendant can reestablish control.

The ACTGA feature operates normally during a soft processor swap.

INTERACTIONS WITH OTHER FEATURES

The following System 85 features affect or are affected by the operation of this feature.

ARS (Automatic Route Selection)

The ACTGA feature takes precedence over ARS. A call directed by ARS to a controlled trunk group is routed to an attendant.

Call Vectoring

If vector processing encounters a ‘‘route to’’ step where the call would route over a trunk group that is currently controlled by the attendant, the ‘‘route to’’ step is not executed. Instead, if the ‘‘route to’’ step is the final effective step in the vector, the switch treats the ‘‘route to’’ step as a ‘‘stop’’ step. If vector steps follow the ‘‘route to’’ step, vector processing continues with the next sequential step.

Data Communications Access

Calls to DCA (Data Communications Access) ports can be restricted by applying Attendant Control of Trunk Group Access to the DCA trunk groups. Any attempt to access a DCA port is redirected to an attendant for screening. The attendant can then transfer the call to a DCA port. However, attendant-extended data calls are not provided Data Protection.

Data Protection

Trunks under control of the attendant group cannot be directly accessed. An attendant must access these trunks for voice terminal users. Data Protection—Temporary is not available for attendant-extended calls. These trunks, if used for data transmission, should be assigned Data Protection—Permanent.

Host Computer Access

Calls to Host Computer Access ports can be restricted by applying Attendant Control of Trunk Group Access to the Host Computer Access trunk groups. Any attempt to access a Host Computer Access port is redirected to an attendant. If the attendant is to screen these calls, a voice terminal equipped with transfer capabilities must be provided near the attendant console to perform the transfer. Data call transfers cannot be performed from the attendant console because of the DCP interface at the Host Computer Access port. Modem Pooling is not provided for attendant-extended calls.

ISDN (Integrated Services Digital Network)/PRI (Primary Rate Interface)

Generally, the Attendant Control of Trunk Group Access feature will work normally for ISDN calls. However, to place an ISDN call, the AAR or ARS feature must be used. Therefore, attendants must not use the Attendant Direct Trunk Group Selection feature to complete ISDN calls.

Main/Satellite

When an attendant activates control of a Main/Satellite trunk group, calls over the trunk group route to an attendant. This occurs even though the calling party does not necessarily realize it is a trunk call and not an intraswitch call.

Precedence Calling

The ACTGA feature functions normally for AUTOVON trunks. When in effect, Precedence Calling calls are routed to the attendant priority queue.

Queuing

An outgoing call is routed to the attendant instead of an outgoing call queue when the ACTGA feature is activated. If the ACTGA feature is activated when there are already calls in an outgoing call queue, those calls are serviced from the queue without consideration to the ACTGA feature.

Recorded Telephone Dictation Access

If Attendant Control of Trunk Group Access is active on a recorded telephone dictation trunk group when the switch is in the preselected call routing mode of operation, any attempt to access a recorded telephone dictation trunk in the restricted trunk group results in intercept tone.

Route Advance

The Route Advance feature overrides ACTGA in a route advance sequence unless ACTGA is active on the first trunk group in the Route Advance pattern.

Tenant Services

An attendant (in a partition other than Attendant Partition 0) can control access to trunk groups that are assigned to that attendant's partition. When control is allowed, the switch returns confirmation tone to the attendant (as would occur in an unpartitioned switch). However, when an attendant attempts to control a trunk group that is not assigned to the attendant's partition, the switch denies the attempt and returns intercept treatment to the attendant.

When Attendant Control of Trunk Group Access is activated toward a *shared* trunk group, the switch applies control to every extension partition sharing the trunk group. Controlled outgoing calls from an extension partition *with* an attendant partition assigned route to the assigned attendant partition. Controlled outgoing calls from an extension partition *without* an attendant partition assigned route to Attendant Partition 0 (if assigned). If Attendant Partition 0 is not assigned, the switch denies these outgoing calls by returning intercept treatment.

An attendant in Attendant Partition 0 can control access to any trunk group* in the lowest two rows of Attendant DTGS buttons. (These two rows of buttons have ‘‘CONT’’ lamps.)

Unattended Console Service—Alternate Console Position

When the Alternate Console Position and the ACTGA features are provided and activated concurrently, calls to a controlled trunk route to the alternate console position for subsequent processing.

Unattended Console Service—Preselected Call Routing and Call Answer From Any Voice Terminal

When the Preselected Call Routing or Call Answer From Any Voice Terminal features and the ACTGA feature are activated concurrently, calls to a controlled trunk receive intercept tone.

HARDWARE REQUIREMENTS

None.

FEATURE ADMINISTRATION

Assignment of the ACTGA feature is on a per-system basis. This feature is only administered using the MAAP. This feature can also be administered using CSM (Centralized System Management).

* Except the Attendant Conference trunk group (if assigned).

The following are the applicable MAAP procedures.

MAAP PROCEDURES ATTENDANT CONTROL OF TRUNK GROUP ACCESS		
PROCEDURE	**WORD**	**PURPOSE**
204	1	Designates the desired alphanumeric display for ACTGA to the attendant console(s). The applicable encode is as follows: 291 Attendant Control of Trunk Group Access.
350	1	Assigns the first digit of the ACTGA dial access codes (if required).
350	2	Assigns the dial access codes for the ACTGA feature. The applicable encodes are as follows: 20 Activate control of trunk group access 21 Cancel control of trunk group access.

The following are the applicable CSM Command Paths utilizing the **admin** area of TCM or FM.

CSM SCREENS — MASKS ATTENDANT CONTROL OF TRUNK GROUP ACCESS		
APPL'N	**OBJECT**	**PURPOSE**
TCM	console-messages	Assigns designated alphanumeric display for ACTGA to the attendant console(s).
TCM/FM	first-digit	Assigns the first digit of the ACTGA dial access codes (if required).
TCM/FM	dial-access-codes	Assigns the dial access codes for the ACTGA feature. System 85 R2 V4 — The dial access code can be up to four digits long.

ATTENDANT DIRECT EXTENSION SELECTION WITH BUSY LAMP FIELD

DESCRIPTION

This feature allows an attendant to select an extension from as many as 1800 extension numbers by pressing two buttons instead of dialing an extension number. The BLF indicates the busy/idle status of the extension number. The BLF minimizes the time between an attendant's answer of an incoming call and the attendant's report that a voice terminal is busy. An attendant need only look at the field to determine whether the terminal is busy or idle.

Extended DXS is available for switches with more than 1800 extension numbers. For Extended DXS, the GROUP SELECT and GROUP DISPLAY buttons are assigned to the attendant console(s) (see Figure 8-1).

TPA # 750306

Figure 8-1. Attendant Console With DXS/BLF Option

Feature History and Development

This feature was first available on System 85 in Release 1. Because line capacities were increased for Release 2 switches, the maximum number of hundreds groups that Extended DXS can access has also been increased. Extended DXS on Release 1 switches allows for as many as 32 hundreds groups, while 100 hundreds groups are allowed by Release 2 switches.

USER OPERATIONS

The following are the user operating procedures for this feature.

To Call an Extension (e.g., 7382) Using DXS:

- Press an idle loop button. [PA lamp goes out.]
- Press the appropriate hundreds group selection button (i.e., 73).
- Press the DXS button corresponding to the last two digits of the extension number (i.e., 82).

To Call an Extension (e.g., 6458) Using Extended DXS:

- Press an idle loop button. [The GROUP SELECT lamp automatically lights.]
- Press the START button. [Dial tone]
- Press the DXS button corresponding to the first two digits of the extension number (i.e., 64). [The alphanumeric display shows ‘‘64**’’.]
- Press the DXS button corresponding to the last two digits of the extension number (i.e., 58). [Adjacent BLF lamp lights.]

To Display the Currently Active Hundreds Group for Extended DXS:

- Press GROUP DISPLAY.

CONSIDERATIONS

5-Digit Dialing

The Attendant DXS feature cannot be used on Release 2, Version 3 and later switches that use 5-digit dialing plans. Direct Extension Selection is inoperative on these switches.

DXS Versus Extended DXS

To facilitate operations for the attendant(s), either DXS or Extended DXS can be used, but not both. When Extended DXS is enabled, the hundreds group selection buttons for DXS are disabled.

As many as 100 hundreds groups are accessible to Extended DXS. Therefore, using Extended DXS, attendants have convenient access to as many as 10,000 extension numbers.

Hard and Soft Processor Swaps

Attendant DXS button assignments are stored in a translation portion of switch memory. Therefore, these assignments will endure a hard processor swap.

The DXS buttons and lamps operate normally during a soft processor swap.

INTERACTIONS WITH OTHER FEATURES

The following System 85 features affect or are affected by the operation of this feature.

ACD (Automatic Call Distribution)

In a switch with 3- or 4-digit extensions, an attendant can use the appropriate DXS buttons to place or extend calls to the associated extension number of an ACD split. However, since a split's queue is never really ''busy,'' the BLF lamps adjacent to these DXS buttons are never lit.

Call Vectoring

An attendant can use the DXS buttons to place or extend calls to a VDN. However, since a VDN's associated vector is never really ''busy,'' the BLF lamps for these DXS buttons are never lit.

Centralized Attendant Service

When a console at a Centralized Attendant Service main location is handling a call from a branch location, the BLF gives no indication of busy/idle status of branch location voice terminals. An attendant's DXS buttons cannot be used to call voice terminals at the branch.

The Attendant Direct Extension Selection With Busy Lamp Field feature is not available for backup voice terminals at branch locations.

Data Communications Access

When a terminal number is assigned to a Data Communications Access port, a Data Communications Access trunk group can be accessed using the appropriate DXS button. However, the associated busy lamp does not indicate the busy or idle status of the Data Communications Access port.

DCS (Distributed Communications System)

The Attendant DXS with BLF feature is compatible with the DCS feature as long as the dialing plan is limited to 4-digits. Attendant DXS cannot be used in a DCS where 5-digit dialing is used. Also, Attendant DXS does not work properly in a DCS where one or more of the nodes is an Enhanced DIMENSION® System switch.

EUCD (Enhanced Uniform Call Distribution)

An attendant can use the appropriate DXS buttons to place or extend calls to the associated extension number of an EUCD split. However, since a split's queue is never really ''busy,'' the BLF lamps adjacent to these DXS buttons are never lit.

Main/Satellite/Tributary

The Attendant DXS With BLF feature can select a voice terminal on a satellite switch. However, the BLF does not indicate busy/idle status for these voice terminals.

Off-Premises Terminals

When trunk port off-premises terminals have Multidigit Steering assigned, Attendant DXS With BLF can access an off-premises terminal via the appropriate DXS button. However, the associated busy lamp does not indicate its busy or idle state.

Tenant Services

Assignment of DXS or Extended DXS is on a system-wide basis. Every attendant in a partitioned System 85 has the complete set of DXS buttons and the associated BLF lamps. The BLF lamps are updated on every attendant console, but attendant calling is limited by the Tenant Services feature.

An attendant (in a partition other than Attendant Partition 0) is allowed to use DXS or Extended DXS to call a voice terminal in any partition that the attendant can call using the touch-tone dialing pad. When an attendant attempts to call a voice terminal in a partition that is not allowed by partitioning, the switch returns intercept treatment to the attendant.

An attendant in Attendant Partition 0 is allowed to use DXS or Extended DXS to call any voice terminal in the switch.

HARDWARE REQUIREMENTS

The following additional or special hardware is required for the DXS/BLF feature.

- Every attendant console must be the same type and provided with the same features, lamps, and button arrangements.

  NOTE: Two types of consoles are available for System 85: type 30 and type 34. This feature (i.e., DXS or Extended DXS) is only available using type 34 consoles which are equipped with DXS buttons and the busy lamp field.

FEATURE ADMINISTRATION

Assignment of the Attendant DXS With BLF feature is on a per-system basis. This feature is administered using the MAAP. This feature can also be administered using CSM (Centralized System Management).

The following are the applicable MAAP procedures.

MAAP PROCEDURES — ATTENDANT DXS WITH BLF		
PROCEDURE	**WORD**	**PURPOSE**
200	1	Enables (or blocks) Extended DXS.
201	1	Assigns DXS group selection buttons to the attendant console(s).
201	2	Assigns hundreds groups accessible to Extended DXS.
203	1	Administers the GROUP SELECT and GROUP DISPLAY buttons for Extended DXS.

The following are the applicable CSM Command Paths utilizing the **admin** area of TCM or FM.

CSM SCREENS — MASKS ATTENDANT DXS WITH BLF		
APPL'N	**OBJECT**	**PURPOSE**
TCM	console-features	Assigns type of console, assigns console features, enables (or blocks) Extended DXS.
TCM	blf-dxs-group-keys	Assigns DXS group selection buttons to the attendant console(s).
TCM	dxs-extended	Assigns hundreds groups accessible to Extended DXS.
TCM	control-keys	Administers the GROUP SELECT and GROUP DISPLAY buttons for Extended DXS.

ATTENDANT DIRECT TRUNK GROUP SELECTION

DESCRIPTION

An attendant can access an idle outgoing trunk by pressing the button assigned to the desired trunk group. The single-button operation reduces the time and effort needed in handling outgoing calls. Each console has 24 DTGS (Direct Trunk Group Selection) buttons (see Figure 9-1).

TPA # 750307

Figure 9-1. Attendant Console With DTGS Buttons

Feature History and Development

This feature was first available on System 85 in Release 1. There have been no changes to this feature since its introduction.

USER OPERATIONS

The following is the user operating procedure for this feature.

To Access an Idle Outgoing Trunk:

- Press the desired trunk group button.

CONSIDERATIONS

Hard and Soft Processor Swaps

Attendant DTGS button assignments are stored in a translation portion of switch memory. Therefore, these assignments will endure a hard processor swap.

The DTGS buttons and lamps operate normally during a soft processor swap.

INTERACTIONS WITH OTHER FEATURES

ISDN/PRI (Integrated Service Digital Network/Primary Rate Interface)

Because of messaging and information requirements for ISDN calls, all such calls should be placed using the AAR (Automatic Alternate Routing) or ARS (Automatic Route Selection) feature. Attendant Direct Trunk Group Selection should not be used to place an ISDN call.

Tenant Services

Assignment of Attendant Direct Trunk Group Selection is on a system-wide basis. Every attendant console in a partitioned System 85 is provided with the complete set of 24 DTGS buttons and the associated lamps. However, the Tenant Services feature limits the use of these buttons. Also, the switch only updates the lamps associated with a specific button for consoles that can access that button's trunk group.

An attendant (in a partition other than Attendant Partition 0) is allowed to use the DTGS feature to access any trunk group that the attendant can access by dialing the trunk-group access code. When an attendant tries to select a trunk group that is not allowed by partitioning, the switch returns intercept treatment to the attendant.

An attendant in Attendant Partition 0 is allowed to use every DTGS button on the attendant console. Also, the switch updates the lamps associated with every DTGS button on these consoles.

HARDWARE REQUIREMENTS

The only hardware required for this feature is an attendant console. Any standard attendant console available with the System 85 can be used.

FEATURE ADMINISTRATION

Assignment of the Attendant Direct Trunk Group Selection feature is on a per-trunk group basis. This feature is administered using the MAAP (Maintenance and Administration Panel). This feature can also be administered using CSM (Centralized System Management).

The following are the applicable MAAP procedures.

MAAP PROCEDURES — ATTENDANT DIRECT TRUNK GROUP SELECTION		
PROCEDURE	**WORD**	**PURPOSE**
200	1	Enables the Attendant Direct Trunk Group Selection feature.
202	1	Assigns Direct Trunk Group Selection buttons to the attendant console(s).

The following are the applicable CSM Command Paths utilizing the **admin** area of TCM or FM.

CSM SCREENS — MASKS ATTENDANT DIRECT TRUNK GROUP SELECTION		
APPL'N	**OBJECT**	**PURPOSE**
TCM	console-features	Enables the Attendant Direct Trunk Group Selection feature.
TCM	control-keys	Assigns the Direct Trunk Group Selection buttons to the attendant console(s).
TCM	console-messages	Designates the desired alpha-numeric displays.

ATTENDANT DISPLAY

DESCRIPTION

The Attendant Display feature is provided through an alphanumeric display on the attendant console (see Figure 10-1). This display provides information needed for call identification and rapid call completion. The attendant can display the extension or trunk number, nature, status, and class of service of the calling line or trunk. Information available includes the following:

- Calling Number
- Class of Service
- Incoming Call Identification
- Trunk Group Identification
- Specific Trunk Identification.

TPA # 750307

Figure 10-1. Attendant Console With Alphanumeric Display

Calling Number Display

The Calling Number display provides an immediate display of the internal extension number of a calling party.

With a 5-digit dialing plan, only the first (leading) four digits of the 5-digit extension number are shown on 4-character alphanumeric displays (e.g., if the calling number is 52180, the attendant display shows 5218). The eight-character alphanumeric displays show all five digits.

NOTE: Eight-character displays are strongly recommended for the attendant consoles when a switch (or DCS network) uses a 5-digit plan.

Class-of-Service Display

The Class-of-Service display specifies calling privileges (features and Facilities Restriction Level) allowed to an internal terminal. The switch can have 63 classes of service assigned, numbered 1 to 63. If specific information on each class of service is needed, a chart could provide the attendant with the pertinent information about each class of service. When general information is sufficient, displays something like the following can be used:

- **NON** — The calling terminal is unrestricted.
- **TOLL** — The calling terminal is toll restricted.
- **REST** — The calling terminal is outward restricted.
- **FULL** — The calling terminal is fully (inward and outward) restricted.

ICI (Incoming Call Identification)

The ICI display identifies the type of call being handled. The display can provide 30 different messages of up to 4 characters. The first three messages are standard in all switches. They are:

- **INC** — Incoming call
- **ATND** — Calls to the Attendant
- **RCL** — Attendant recall.

The customer selects the other messages when ordering the switch. The following are some examples of messages that could be used:

- **NY, PHIL, WASH** — Used to identify the city of origin for an FX (Foreign Exchange) trunk.
- **CONF** — Indicates a conference is recalling the attendant.
- **IPC** — Identifies an interposition call from another attendant.
- **CTGA** — Indicates an intercepted call routed to the attendant because of the Attendant Control of Trunk Group Access feature.
- **ACAS** — Indicates that the ACA (Automatic Circuit Assurance) feature has detected a possible trunk malfunction. This message also identifies the type of referral (‘‘L’’: long, or ‘‘S’’: short) that occurred.
- **CFWD** — Indicates a call forwarded to the attendant, etc.

Trunk Identification Display

The Trunk Identification display identifies the specific trunk being used on an incoming or outgoing call by displaying the Trunk Group Dial Access code and the individual trunk number. This display is particularly useful when the attendant wishes to make test calls for trunk verification.

Feature History and Development

This feature was first available on System 85 in Release 1. There have been no changes to this feature since its introduction.

USER OPERATIONS

The following are the user operating procedures for this feature.

To Access the Class-of-Service Display While Connected to an Internal Party:

- Press CLASS button. [ICI display changes to class-of-service display.]

To Access the Specific Trunk Display While Connected to a Trunk Appearance:

- Press TK-ID button. [Trunk Group display changes to identify the specific trunk number.]

CONSIDERATIONS

Assigned Control Buttons

The class-of-service (CLASS) button and the trunk identification (TRK ID) button are assigned to control buttons on the console.

Trunk-to-Trunk Call Identification

On a trunk-to-trunk call, incoming trunk identification can only be made before completing the trunk-to-trunk connection. Subsequent trunk codes displayed are for the outgoing trunk only.

Hard and Soft Processor Swaps

The contents of the Attendant Display assignments are stored in a translation portion of switch memory. Therefore, these display assignments will endure a hard processor swap.

An attendant display does not operate during a hard processor swap. However, the display operates normally during a soft processor swap.

INTERACTIONS WITH OTHER FEATURES

Call Vectoring

When Call Vectoring redirects coverage calls to the attendant queue, the attendant who answers the redirected call receives the usual Calling Party Identification on the alphanumeric display. The called principal's identification is not provided.

Conference—Attendant Six Party

The Attendant Display feature is denied to an attendant when the attendant is connected to a conference circuit.

HARDWARE REQUIREMENTS

None.

FEATURE ADMINISTRATION

Assignment of the Attendant Display feature is on a per-system basis. This feature can be administered with the MAAP. This feature can also be administered using CSM (Centralized System Management).

The following are the applicable MAAP procedures.

MAAP PROCEDURES — ATTENDANT DISPLAY		
PROCEDURE	**WORD**	**PURPOSE**
203	1	Assigns the display buttons to the attendant console(s). The applicable encodes are: 1 CLASS Button 28 TRK-ID Button 42 STA-ID Button.
204	1	Designates the desired alphanumeric displays.

The following are the applicable CSM Command Paths utilizing the **admin** area of TCM or FM.

CSM SCREENS — MASKS ATTENDANT DISPLAY		
APPL'N	**OBJECT**	**PURPOSE**
TCM	control-keys	Assigns the CLASS button, TRK-ID button, and STA-ID button to the attendant console(s).
TCM	console-messages	Administers the alphanumeric messages associated with either a trunk group or a call type. Each console message is also associated with either a message number or a CAS (Centralized Attendant Service) branch number.

ATTENDANT INTERPOSITION CALLING AND TRANSFER

DESCRIPTION

An attendant at one position, in a multiposition switch, can call another attendant by dialing an access code and the position's assigned number. The called attendant receives a special alphanumeric display (e.g., IPC) to designate the interposition call. This process is used for consultation or when questions about call processing arise. The attendant can also transfer a call to another position on the same switch for special handling.

When the called attendant is busy on another call, the interposition call is held waiting in a priority queue, and the PR (priority call waiting) lamp on the called attendant console lights. When the called console becomes available, the interposition call switches to the first idle loop and takes precedence over the other calls in queue.

Feature History and Development

This feature was first available on System 85 in Release 1. There have been no changes to this feature since its introduction.

USER OPERATIONS

The following are the user operating procedures for this feature.

To Call Another Attendant

Without a source party:

- Press an idle switched loop button. [If lit, the PA lamp goes out. ATND lamp lights.]
- Dial the interposition access code. [Dial tone]
- Dial the attendant position's assigned number. [At calling console, RING lamp lights, and ringback tone is heard. At the called console, ATND lamp flashes if unbusy, PR lamp flashes once quickly, ringing returned, and the ICI display lights.]

With a source party:

- Press an idle switched loop button. [If lit, the PA lamp goes out. ATND lamp lights.]
- Press START. [Dial tone is heard, and SPLIT lamp lights.]
- Dial the interposition access code. [Second dial tone]
- Dial the attendant position's assigned number. [At calling console, RING lamp lights, and ringback tone is heard. At called console, ATND lamp flashes if unbusy, PR lamp flashes if busy, ringing is heard, and the ICI display lights.]

To Answer an Interposition Call at the Called Console:

- Press ANSWER. [At calling console, RING lamp goes out, ANS lamp lights, and ringback tone is removed. At called console, ringing is removed, and the ATND lamp lights. If there's a source party at the called console, the SPLIT lamp lights.]

To Transfer a Source Party to Another Attendant

Before a 2-way connection is made with the other attendant:

- Call the other attendant from the console with the source party.
- Press RELEASE. [At the calling console, the attendant is released from the source party and the RING, SPLIT, and ATND lamps go out. If no calls are waiting, the PA lamp lights. At called console, the ATND lamp flashes, and the ICI display changes from indicating an interposition call to indicating the source party number.]

After a 2-way connection is made with the other attendant:

- Press RELEASE. [At the calling console, the attendant is released from the source party, and the SPLIT lamp goes out. If no calls are waiting, the PA lamp lights.]

  [At called console, the attendant is connected to the source party, and the SPLIT lamp goes out.]

To Cancel a Call to Another Attendant:

- Press CANC.

CONSIDERATIONS

Intercept Tone

Intercept tone is heard by the calling attendant when the called attendant position is unattended (handset removed).

Extending and Transferring Calls

Calls from a voice terminal user to one attendant can be transferred to another attendant, but an attendant cannot extend or transfer an attendant to another position.

2-Party Connections

An attendant cannot transfer a 2-party connection to another attendant position.

Queuing Calls

Interposition calling takes precedence over all attendant-queued calls. Interposition calling is automatically placed in the priority queue and processed on a first-in, first-out basis.

Hard and Soft Processor Swaps

Stable interposition calls will endure a hard processor swap. However, an interposition call cannot be placed during a hard processor swap.

Attendant Interposition Calling and Transfer operates normally during a soft processor swap.

INTERACTIONS WITH OTHER FEATURES

The following System 85 features affect or are affected by the operation of this feature.

Centralized Attendant Service

Calls originating to a centralized attendant via a release link trunk cannot be transferred to another attendant using the Attendant Interposition Calling and Transfer feature.

Malicious Call Trace

If an attendant selectively calls the activating or the controlling attendant during an active Malicious Call Trace, the switch returns ringback to the calling attendant. However, the called attendant will only receive ringing if the attendant has unbusied the console.

For the controlling attendant, priority lamp activity is provided for interposition calls during a trace. However, the controlling attendant does not receive an ICI display for these calls. Instead, the alphanumeric display is reserved for displaying trace information.

For the activating attendant to receive an interposition call, the malicious caller must be placed on hold, and the console must be unbusied. Then, an interposition call will cause the loop lamp to flash and the PR lamp to go out.

Tenant Services

An attendant (in a partition other than Attendant Partition 0) is only allowed to place interposition calls to attendants in the same partition or to attendants in Attendant Partition 0. If an attendant tries to place an interposition call to an attendant in any other partition, the switch denies the call by returning intercept treatment.

An attendant in Attendant Partition 0 is allowed to place an interposition call to an attendant in any partition.

Unattended Console Service—Preselected Call Routing

If an attendant position calls another attendant with Preselected Call Routing active, the call is placed in the called attendant's priority queue. When Preselected Call Routing is deactivated, the call is removed from the priority queue and alerting is provided. The call does not route to the preselected voice terminal.

HARDWARE REQUIREMENTS

None.

FEATURE ADMINISTRATION

Assignment of the Attendant Interposition Calling and Transfer feature is on a per-system basis. This feature is administered using the MAAP. This feature can also be administered using CSM (Centralized System Management).

The following are the applicable MAAP procedures.

MAAP PROCEDURES
ATTENDANT INTERPOSITION CALLING AND TRANSFER

PROCEDURE	WORD	PURPOSE
200	1	Enables the Interposition Calling and Transfer feature.
204	1	Designates the desired Attendant Display for interposition calling.
210	1	Assigns the equipment location of an attendant console position.
350	1	Assigns the first digit of the dial access codes for the Interposition Calling and Transfer feature (if required).
350	2	Assigns the feature dial access codes. The applicable encode is: 29 Interposition call.

The following are the applicable CSM Command Paths utilizing the **admin** area of TCM or FM.

CSM SCREENS — MASKS ATTENDANT INTERPOSITION CALLING AND TRANSFER		
APPL'N	**OBJECT**	**PURPOSE**
TCM	console-features	Enables the Interposition Calling and Transfer feature.
TCM	console-messages	Designates the desired Attendant Display for interposition calling.
TCM	console-equipment	Assigns the equipment location of an attendant console position.
TCM	first-digit	Assigns the first digit of the dial access codes for the Interposition Calling and Transfer feature (if required).
TCM	dial-access-codes	Assigns the Attendant Interposition Calling and Transfer feature dial access codes.

ATTENDANT RECALL

DESCRIPTION

This feature allows a voice terminal user on a 2-party call or on a conference call to call the attendant for assistance. The ICI (Incoming Call Identification) displays ‘‘RCL,’’ or the extension number of one party in the 2-party connection to indicate an attendant recall.

Feature History and Development

This feature was first available on System 85 in Release 1. The enhancements to this feature include:

- The ability to recall an attendant using an LDN (listed directory number) was first provided in Release 2, Version 3.
- An administrable recall button is provided for R2 V4 and was also retrofitted to the R2 V2 and R2 V3 software packages.

USER OPERATIONS

The following are the user operating procedures for this feature.

To Recall the Attendant From a Connection Held on the Attendant Console

From a single-appearance voice terminal without RECALL button:

- Momentarily press the switchhook.
- Held loop alerts on the attendant console. [ANS lamp flashes, and ICI shows the extension number of the terminal NOT performing the recall.]

From a single-appearance voice terminal with RECALL button or a multiappearance voice terminal:

- Press RECALL.
- Held loop rings on the attendant console. [ANS lamp flashes, and ICI display shows extension number of the terminal NOT performing the recall.]

To Call the Attendant From a Connection Not Held on the Attendant Console

From a single-appearance voice terminal without a RECALL button:

- Momentarily press the switchhook. [Recall dial tone] (Other party is placed on soft hold.)
- Dial the attendant (not a selected attendant) access code,

or

- Dial an LDN. [Ringback tone]
- An idle attendant loop rings. [Loop lamp flashes, and ICI display shows RCL.]

From a single-appearance voice terminal with a RECALL button:

- Press RECALL. [Recall dial tone] (Other party is placed on soft hold.)
- Dial the attendant (not a selected attendant) access code,

or

- Dial an LDN. [Ringback tone]
- An idle attendant loop rings. [Loop lamp flashes, and ICI display shows RCL.]

From a multiappearance voice terminal:

- Press CONFERENCE or TRANSFER. [Dial tone] (Other party is placed on hard hold.)
- Dial the attendant access code, a selected attendant access code,

or

- Dial an LDN. [Ringback tone]
- An idle attendant loop rings. [Loop lamp flashes, and ICI display shows extension number of the terminal performing the recall.]

CONSIDERATIONS

Administrable Recall Buttons

Some multiappearance voice terminals do not have a fixed RECALL button. If RECALL buttons are needed for these voice terminals, RECALL buttons can be assigned to the terminals using Procedure 054, Word 1.

Hard and Soft Processor Swaps

Stable attendant recalls will endure a hard processor swap. However, a voice terminal user cannot recall the attendant during a hard processor swap.

The Attendant Recall feature operates normally during a soft processor swap.

INTERACTIONS WITH OTHER FEATURES

Conference—Three Party and Transfer

For the Attendant Recall feature to function properly, the Conference—Three Party and Transfer features must be enabled in Procedure 010, Word 1.

Tenant Services

For calls *held* on an attendant console, the Attendant Recall feature is naturally partitioned on System 85. In a properly partitioned switch, an attendant cannot receive a call that breaks the rules of partitioning. The attendant must extend the call according to partitioning rules. So, for a call held on a console, both parties in the held call can access the attendant holding the call. And, the Attendant Recall feature always alerts the attendant who is holding the call.

For calls *not held* on an attendant console, the Attendant Recall feature is also partitioned. For these recalls, one of the talking parties places the other on hold and then dials the attendant group. In a properly partitioned switch, both of these parties can access the same attendant partition. So, when either party dials the attendant queue (using either the attendant access code or an LDN) the same partitioning checks used by the Dial Access to Attendant feature are made.

HARDWARE REQUIREMENTS

None.

FEATURE ADMINISTRATION

The Attendant Recall feature, as such, does not require administration. However, if administrable recall buttons are needed, they are administered using the MAAP (Maintenance and Administration Panel) or the SMT (System Management Terminal). Recall buttons can also be administered using CSM (Centralized System Management).

MAAP AND SMT PROCEDURES — ATTENDANT RECALL			
PROCEDURE	**WORD**	**PURPOSE**	**SMT**
054	1	Assigns the RECALL button to a multiappearance voice terminal without a fixed RECALL button. The applicable encode is: 27 Recall.	Yes

The following are the applicable CSM Command Paths utilizing the **admin** area of TCM or FM.

CSM SCREENS — MASKS ATTENDANT RECALL		
APPL'N	**OBJECT**	**PURPOSE**
TCM	This command will be set type: i.e, 36-button, 12-button, bct, data-module, feature-module, coverage-module, or vds.	Assigns the RECALL button to a multiappearance voice terminal without a fixed RECALL button.

ATTENDANT RELEASE LOOP OPERATION

DESCRIPTION

An attendant can hold an incoming trunk call off the console if completion of the call has to be delayed (such as Call Waiting on a busy extension or an idle extension does not answer). This frees the switch loop to handle other incoming calls. Therefore, by relieving congestion at the attendant console, this feature is useful to customers with a high volume of incoming traffic. The result is that more calls can be handled by fewer attendants with fewer attendant consoles. Without this feature, an attendant console would only be able to handle six calls at a time.

Timed Reminder

An Attendant Release Loop timed reminder starts timing on release of the call. If the called extension does not answer before the timed reminder interval expires, the call is returned to the attendant incoming call queue for further processing.

Timed Reminder Interval

If not otherwise administered, the timed reminder interval is set by default at 30 seconds. Otherwise, the timed reminder interval can be set by the attendant from 02 to 98 seconds in 2-second increments.

Call Identification

A timed reminder tone is heard at the attendant console. When the attendant answers the call, the trunk identification number is shown on the alphanumeric display. The called extension can be identified by the attendant pressing the STA ID button.

Feature History and Development

This feature was first available on System 85 in Release 1. There have been no changes to this feature since its introduction.

USER OPERATIONS

The following are the user operating procedures for this feature.

To Release the Attendant Loop and Hold a Call Off Console

— After completing a call to a local station:

- Press RELEASE.

— During ringing:

- Press a different loop button.

To Change the Timed Reminder Interval:

- Press an idle loop button. [PA lamp goes out.]
- Press START. [Dial tone]
- Dial the ARL time change access code. [Second dial tone]
- Dial a 2-digit even number between 02 and 98. [Confirmation tone]
- Press RELEASE. [PA lamp lights.]

CONSIDERATIONS

Hard and Soft Processor Swaps

The value of the ARL Timed Reminder Interval is stored in a translation portion of switch memory. Therefore, if an attendant sets the interval and then a hard processor swap occurs, this interval will endure the hard swap.

If an attendant-extended call is ringing a voice terminal when a hard swap occurs, this unstable call is dropped and does not return to the attendant console.

The Attendant Release Loop Operation feature operates normally during a soft processor swap.

INTERACTIONS WITH OTHER FEATURES

The following System 85 features affect or are affected by the operation of this feature.

Call Coverage

When an attendant extends a call to a voice terminal with coverage assigned (with coverage criteria that apply to the call) and releases the call, the call will not return to the attendant queue. Instead, the call will redirect to coverage according to the assigned coverage path.

For a call from an internal voice terminal extended by an attendant to another internal voice terminal, the call can redirect to coverage as an attendant call (i.e., external call). This occurs when the attendant does not release the call before the call type is checked for redirection to coverage.

Tenant Services

The attendant-calling operations of this feature are naturally partitioned on System 85. In a properly partitioned switch, an attendant cannot receive a call that breaks the rules of partitioning. The attendant must extend the call according to partitioning rules. And, the Attendant Release Loop Operation feature always returns the call to the same attendant console that extended the call.

The ARL Time Change operation is not partitioned. The ARL timed reminder interval can be changed by an attendant in any attendant partition. When this is done, the new ARL timed reminder interval is applied to every attendant partition in the switch.

Timed Reminder

The Attendant Release Loop Operation feature is similar to the Timed Reminder feature, and both of these features can reside on the same switch. The Timed Reminder feature is always provided, while the Attendant Release Loop Operation feature is optional.

When both features reside on the same switch, these two features operate simultaneously and control two separate sets of calls. *Incoming trunk calls* are controlled by the Attendant Release Loop Operation feature, and the timed reminder interval for these calls is assigned in Procedure 275, Word 4. *Other affected calls* are controlled by the Timed Reminder feature, and the timed reminder interval for these calls is fixed at 30 seconds.

When only the Timed Reminder feature resides on the switch, *all affected calls* are controlled by the Timed Reminder feature, and the timed reminder interval is fixed at 30 seconds.

HARDWARE REQUIREMENTS

None.

FEATURE ADMINISTRATION

Assignment of the Attendant Release Loop feature is on a per-system basis. The customer can partially administer this feature using the SMT (System Management Terminal). This feature can also be administered using CSM (Centralized System Management).

The following are the applicable MAAP and SMT procedures.

MAAP AND SMT PROCEDURES — ATTENDANT RELEASE LOOP OPERATION			
PROCEDURE	**WORD**	**PURPOSE**	**SMT**
203	1	Administers the Extension Number Display Time-Out button for the attendant console(s). The applicable encode is: 42 STA-ID Button.	No
275	4	Assigns the Attendant Release Loop Operation feature to the system class of service and set the timed reminder interval.	Yes
350	1	Assigns the first digit of the dial access code to change the timed reminder interval (if required).	No
350	2	Assigns the dial access code to allow the attendant to change the timed reminder interval. The applicable encode is: 31 ARL time change.	No

The following are the applicable CSM Command Paths utilizing the **admin** area of TCM or FM.

CSM SCREENS — MASKS ATTENDANT RELEASE LOOP OPERATION		
APPL'N	**OBJECT**	**PURPOSE**
TCM	control-keys	Administers the Extension Number Display Time-Out button for the attendant console.
TCM/FM	sys-cos	Assigns the Attendant Release Loop Operation feature to the system class of service and sets the timed recall in increments of seconds.
TCM/FM	first-digit	Assigns the first digit of the dial access code to change the timed recall interval (if required).
TCM/FM	dial-access-codes	Assigns the dial access code to allow the attendant to change the timed recall interval.

AUDIX

DESCRIPTION

The AUDIX (Audio Information Exchange) message-handling system provides subscribers with the ability to send and receive voice messages. AUDIX subscribers can also receive messages from callers using either the call answering capabilities of the AUDIX feature or the Leave Word Calling feature. The AUDIX system uses recorded prompts and announcements to guide callers through the messaging operations.

Feature History and Development

The AUDIX feature was first available for System 85 with the Release 2, Version 2 software package.

The AUDIX feature is enhanced in R2 V4 to provide:

- Call transfer into AUDIX
- Call transfer out of AUDIX
- Return the call operation.

NOTE

The AUDIX feature provides the functionality that is commonly known as a ‘‘Voice Mail’’ system.

AUDIX Applications

The AUDIX system includes the following applications to enhance voice communications between subscribers.

- Easy 1-way information transfer
- Communication with people who are busy, unavailable during regular hours, or away on business
- Convenient communication with personnel in different time zones
- Reduction of incomplete calls between personnel
- Reduction of unproductive calls and undesirable conversation
- Distribution of like information to many recipients
- Interaction where an immediate response is unnecessary

- Reduction of poorly transcribed messages.

Message Handling Facilities

The AUDIX system provides three message-handling facilities to run these applications. These facilities are as follows:

- **Voice Mailbox:** This facility allows AUDIX subscribers to create, edit, send, and receive voice messages. Only AUDIX subscribers have voice mailboxes. The AUDIX system provides voice prompts to guide Voice Mailbox users. A subscriber controls the voice mailbox using touch-tone commands.
- **Call Answering:** This facility automatically answers calls to a busy or unavailable subscriber who forwards the calls to AUDIX or uses the AUDIX system as the final point in the coverage path. When answering a call, the AUDIX system prompts the caller to leave a message, records the message, and delivers the message to the called subscriber's incoming mailbox. Each subscriber can record a personal greeting to be heard by the calling party.
- **Leave Word Calling:** The Leave Word Calling feature works with AUDIX via the Unified Messaging feature to allow a calling party to request a returned call by pressing the LWC feature button or dialing the access code. The calling party does not need to record a message when only desiring a returned call. When an AUDIX subscriber in the local switch (or DCS network) activates Leave Word Calling, the AUDIX system is able to identify the calling party by name to the called subscriber. However, when a nonsubscriber activates Leave Word Calling, the AUDIX system is only able to report the calling party's extension number. In either case, AUDIX reports the date and time of the call.

Subscribers access the AUDIX Voice Mailbox feature by dialing the AUDIX extension number. The AUDIX extension is an ACD (Automatic Call Distribution) [previously, EUCD (Enhanced Uniform Call Distribution)] associated extension number* that routes the request to use the AUDIX system to an available AUDIX voice port. If all the ports are busy, the request to use AUDIX is queued, and the user hears ringback (optionally, followed by a recorded announcement) until a port becomes available.

After gaining access to AUDIX, subscribers log on to AUDIX by entering their voice terminal extension number and their personal AUDIX password. The individual passwords control access to each subscriber's messages, allowing only authorized users to access the messages.

AUDIX and Unified Messaging

After logging on to the AUDIX system, the AUDIX system voices the subscribers name and the status of any incoming mail to the subscriber. Besides telling the subscriber about new AUDIX messages, the AUDIX system also provides unified messaging by reporting unaccessed messages on other message services [e.g., EDC (Electronic Document Communications), MCS (Message Center Service), or switch LWC (Leave Word Calling) messages]. A short menu of activities is voiced to the user. These activities are as follows:

---

* When Call Vectoring is enabled, the AUDIX extension number is a VDN (vector directory number).

- Create a message
- Get your messages
- Change your personal greeting
- Check the status of outgoing messages
- Change your password and administer mailing lists.

Subscribers select the activity they wish to do from the activity menu. Each activity has subordinate functions that provide the subscriber with specific capabilities.

In addition, the subscriber may request more detailed instructions at any time by using the help command.

The subscriber may return to the activity menu to begin another activity in two ways. First, the AUDIX system automatically returns to the activity menu when an activity is finished. Second, the subscriber can manually return to the menu during a function by using the Restart command.

There are five enhancements to the AUDIX feature for System 85 Release 2, Version 4:

- **Call Transfer Into AUDIX***: Redirected calls (Call Coverage, Call Forwarding, etc.) or direct access calls can be transferred **into AUDIX**.
- **Call Conference Into AUDIX***: Redirected calls (Call Coverage, Call Forwarding, etc.) or direct access calls can be conferenced **into AUDIX**.
- **Enhanced Call Transfer Out of AUDIX†**: Calls redirected to AUDIX (through Call Coverage, Call Forwarding, etc.) or calls placed directly to AUDIX can be transferred **out of AUDIX** to a subscriber- or caller-specified destination. Calls can only be returned to extensions in the switch dialing plan.
- **Return the Call†**: After accessing AUDIX to retrieve messages, subscribers can return calls to people that have left messages for them. Calls can only be returned to extensions in the switch dialing plan.
- **Basic Call Transfer Out of AUDIX for Other AT&T Switches†**: An enhancement to Release 1, Version 2 of AUDIX allows a user to transfer a call out of AUDIX when using a Release 2, Version 2 or Release 2, Version 3 System 85 switch, a DIMENSION® 2000 FP8 Issue 3L7, or a Release 1, Version 3 System 75.

Call Transfer Into AUDIX

This enhancement allows a voice terminal user who has answered a direct or redirected call to transfer the caller to the called party's AUDIX mailbox. The caller can then record a message for the called party with AUDIX.

The called party identification and other information required to transfer a call to the proper AUDIX machine is retained internally by the switch for redirected calls. AUDIX treats the transferred call like a call initially redirected to AUDIX from the called party's extension.

---

* This function can be performed using any version of the AUDIX system.

† This function requires the R1 V2 version of the AUDIX-L or AUDIX-M system. This function can also be performed using any version of the AUDIX-S system.

The need to transfer a caller to AUDIX can occur because:

- The initial call may have been redirected from the called party's extension. The features that can divert calls from the originally called extension are:
  - — Call Coverage
  - — Call Forwarding
  - — Call Pickup
  - — Hunting
  - — Unattended Console Service.
- The call may have been answered by a person at a bridged appearance (image) of the called extension.
- The call was answered at the called party's extension by some one other than the party who was being called.

The reasons for transferring a caller to AUDIX are:

- The caller may want to leave a confidential message.
- The caller may want to leave a message that is too long or technically detailed for someone to write down.

Call Conference Into AUDIX

This enhancement allows a voice terminal user to set up a 3-party conference between a caller, the answering party, and the originally called party's AUDIX mailbox.

This enhancement is well suited to handle two specific scenarios:

1. **Reference for the Originally Called Party**—This is used when the called party needs a detailed record of the conversation between the caller and the answering party. This would be a redirected call, such as Call Coverage or Call Forwarding, where the message is highly critical or detailed. A conference call is set up between the caller, the person who answered the call, and the called party's AUDIX mailbox. The called party can listen to the message later for reference.
2. **Memorandum Recording for Record**—This is used when the called party needs a record of the conversation for later reference, or to allow a third party, not available at the time of the call, to listen to the conversation. A conference call can be set up between the caller, the called party, and the called party's AUDIX mailbox (call redirection has not taken place).

Enhanced Call Transfer Out of AUDIX

Call Transfer Out of AUDIX can be used by a caller redirected to AUDIX or by an AUDIX subscriber as described.

1. **Covered-Call Transfer Out of AUDIX**—A caller has been redirected to AUDIX. The caller may leave an AUDIX message and then transfer to an alternate destination (e.g., a secretary). Alternate destinations can include:
   - *Default Coverage Points* such as secretaries, Message Center, or other live-answering positions. Initially, the alternate destination is established by the AUDIX system administrator.

- *Caller-specified extensions* within the switching system (i.e., local extensions or extensions on remote switches). The remote extensions may be on switches that are in a DCS arrangement with the local switch or other extensions within the dialing plan of the local switch.

2. **AUDIX Subscriber Call Transfer Out of AUDIX**—If a caller has called AUDIX directly or has been redirected to AUDIX (and has logged in as a subscriber), the caller may restart the AUDIX session and transfer out of AUDIX to an alternate destination as described under ''Covered-Call Transfer Out of AUDIX.''

Successful Transfer: Successful transfers within a host switch (the switch connected directly to the AUDIX adjunct) and to a remote switch are discussed here. See the **Considerations** section of this feature for a description of failed transfers out of AUDIX.

Host Switch — If the alternate destination is a station on the host (local) switch, the switch rings the station, connects the calling party, and drops AUDIX from the connection.

If Call Coverage is active at the alternate destination and AUDIX is a coverage point, the call could be directed back to AUDIX.

For a Covered-Call Transfer where the **default** alternate destination is requested, the call **will not** follow the coverage path of the alternate destination. In all other cases, if coverage is invoked at the alternate destination, the call **will** follow the coverage path (i.e., the call could come back to AUDIX).

If Call Coverage is not active, the alternate destination's telephone rings until answered or until the calling party abandons the call. The call **will not** automatically be returned to AUDIX.

Remote Switch — If the alternate destination is a station on a remote switch in a DCS, the host switch attempts to seize a tie trunk to the remote switch. If a tie trunk is seized, the call routes to the remote switch. The transfer is then considered successful. If the alternate destination does not answer or the call cannot be completed at the remote switch, the caller must end the call. The call **is not** returned to AUDIX.

Return the Call

If a user calls AUDIX directly or is redirected to AUDIX (and logs in as an AUDIX subscriber), the caller may retrieve their own messages. While retrieving messages, the caller may automatically ''return'' a call to someone that has left the caller an AUDIX message (voice mail, call answering, or Leave Word Calling).

NOTE: The Return Call capability is automatically provided when *either* Basic or Enhanced Transfer Out of AUDIX is assigned on the AUDIX system.

Basic Transfer Out of AUDIX for Pre-Release 2, Version 4 System 85

An enhancement to Release 1, Version 2 AUDIX allows a user to do a basic call transfer out of AUDIX when the switch is not a System 85, Release 2, Version 4. This type of transfer does not use ES messages between the switch and AUDIX and provides limited recovery information. Except for the lack of error handling, the user interface is similar to Enhanced Transfer Out of AUDIX.

Basic Transfer Versus Enhanced Transfer Out of AUDIX

For the *basic switchhook-flash transfer*, AUDIX-L and AUDIX-M must have the Release 1, Version 2 software. This method of transfer works with R2 V2 System 85, R2 V3 System 85, DIMENSION 2000 System FP8 Issue 3L7, and R1 V3 System 75.

There is no error recovery with this basic transfer except for checking the length of the extension number. Most failures require the user to hang up and try again.

Basic transfer can only transfer calls to extensions in the host switch's 3-, 4-, or 5-digit dialing plan.

For the *enhanced transfer using ES (Enhanced Services) signaling*, AUDIX-L and AUDIX-M must also have the Release 1, Version 2 software. This method of transfer works with R2 V4 System 85.

Primarily on the host switch, this enhanced transfer provides better error recovery, added functionality, and faster transfers than the basic transfer.

Using enhanced transfer, the host System 85 can specify transfer failures to the AUDIX. Then, in turn, the AUDIX can give a voiced report of the failure condition (e.g., trunks busy, voice terminal busy, invalid extension number, or coverage path busy) to the transferring party.

Also, using enhanced transfer, the *original* redirection information is saved. Then, with each call transferred out of AUDIX to the host switch, accurate display information can be given to the user receiving the transferred call. Moreover, the saved redirection information prevents AUDIX transfers from redirecting again.

Enhanced transfer is also faster and more graceful than basic transfer. Basic transfer depends on a switchhook flash and delay timers to execute the transfer. Whereas, enhanced transfer operates outside these constraints.

Enhanced transfer can only transfer calls to extensions in the host switch's 3-, 4-, or 5-digit dialing plan.

For a more complete description of the AUDIX system, refer to the Audio Information Exchange Reference Manual, 585-300-201.

USER OPERATIONS

For basic AUDIX User Operations, see the Audio Information Exchange User's Manual (999-700-504 IS for AUDIX Release 1, Version 1 or 585-302-701 for AUDIX Release 1, Version 2). All the examples in this section refer to extension number addressing; you can also use name addressing in these examples. Use *A to change to name addressing.

All of the AUDIX system messages that a user will hear are printed in italics. The wording conventions used include the *pound* (#) and *star* (*) symbols.

The following are the user operating procedures for AUDIX in System 85, Release 2, Version 4.

To Transfer a Call Into AUDIX

For terminals without CONFERENCE, RECALL, or TRANSFER buttons:

- While active on a 2-party call, momentarily press the switchhook. [The second party is placed on soft hold, and you hear recall dial tone.]
- Dial the Call Transfer into AUDIX dial access code. [You hear ringback tone. The call is queued for the AUDIX split.]
- Hang up. [The call is transferred to AUDIX.]

For terminals with RECALL buttons but no TRANSFER buttons:

- While active on a 2-party call, press the RECALL button. [The second party is placed on soft hold, and you hear recall dial tone.]
- Dial the Call Transfer into AUDIX dial access code. [You hear ringback tone. The call is queued for the AUDIX split.]
- Hang up. [The call is transferred to AUDIX.]

For terminals with TRANSFER buttons:

- While active on a 2-party call, press the TRANSFER button. [The second party is placed on hold and an idle appearance is automatically selected.]
- Dial the Call Transfer into AUDIX dial access code. [You hear ringback tone. The call is queued for the AUDIX split.]
- Press the TRANSFER button. [The call is transferred to AUDIX.]
- Hang up.

To Establish a 3-Party Conference With AUDIX From a 2-Party Connection

For terminals without CONFERENCE, RECALL, or TRANSFER buttons:

- While active on a 2-party call, momentarily press the switchhook. [The second party is placed on soft hold, and you hear recall dial tone.]
- Dial the Call Transfer into AUDIX dial access code. [You hear ringback tone. The call is queued to the AUDIX split.]
- Wait for AUDIX to answer.
- Momentarily press the switchhook. [You, the second party, and AUDIX form a 3-way conference. At the sound of the tone, you may record a message.]

For terminals with a RECALL button but not CONFERENCE and TRANSFER buttons:

- While active on a 2-party call, press the RECALL button. [The second party is placed on soft hold, and you hear recall dial tone.]
- Dial the Call Transfer into AUDIX dial access code. [You hear ringback tone. The call is queued to the AUDIX split.]
- Wait for AUDIX to answer.
- Press the RECALL button. [You, the second party, and AUDIX form a 3-way conference. At the sound of the tone, you may record a message.]

For terminals with CONFERENCE buttons:

- While active on a 2-party call, press the CONFERENCE button. [The second party is placed on hold and an idle appearance is automatically selected.]
- Dial the Call Transfer into AUDIX dial access code. [You hear ringback tone. The call is queued to the AUDIX split.]
- Wait for AUDIX to answer.
- Press the CONFERENCE button. [You, the second party, and AUDIX form a 3-way conference. At the sound of the tone, you may record a message.]

To Drop the Third Party or AUDIX While in a 3-Way Conference or With a 2-Party Connection and AUDIX Ringing

For terminals without a DROP button:

- Momentarily press the switchhook. [You and the second party remain connected while the third party or AUDIX are dropped from the connection.]

For terminals with a DROP button:

- Press DROP. [You and the second party remain connected while the third party or AUDIX are dropped from the connection.]

Options for Covered-Call Transfer Out of AUDIX

When you are redirected to AUDIX by Call Coverage, and the Call Transfer Out of AUDIX feature is active, you must decide how you want the call to be handled.

- The call is redirected to AUDIX. [The following message is heard: ‘‘*Your call is being answered by the Audio Information Exchange Service.* **Called party’s name**, *extension <#> is not available at this time. To leave a message, wait for the tone. Otherwise for assistance, press zero now.*’’]

- If you press 0 or *0, the call is redirected to the called party's default alternate destination.
- If you press *T, you may select any destination (as long as the number is in the switch numbering plan).

  After selecting the destination, press #.

Details on these scenarios are presented next.

To Transfer Out of AUDIX Before the Record Tone Sounds:†

- Be sure that you've accessed AUDIX. (The ''Your call is being answered by AUDIX'' message and the 2-second silence period have not ended.) Do either **a** or **b**.
  a. Press 0 or *0. [You hear ''*Please wait,*'' followed by ringback tone. The call has been transferred to the covering extension.]
  b. Press *T. [The following AUDIX message is heard: ''*Please enter the extension followed by the pound sign. To transfer by specifying names instead, press star A.*'']

     Dial an extension, followed by #. [You hear ''*Please wait,*'' followed by ringback tone. The call has been transferred to the selected extension.]

To Transfer Out of AUDIX After the Record Tone Sounds:†

- Be sure that you've accessed AUDIX. (The ''Your call is being answered by AUDIX'' message and the 2-second silence period have ended.) After recording a message, do either **a** or **b**.
  a. Press 0 or *0. [You hear ''*Please wait,*'' followed by ringback tone. The call has been transferred to the covering extension.]
  b. Press *T. [The following AUDIX message is heard: ''*Please enter the extension followed by the pound sign. To transfer by specifying names instead, press star A.*'']

     Dial an extension, followed by #. [You hear ''*Please wait,*'' followed by ringback tone. The call has been transferred to the selected extension.]
- The message is delivered to the called party.

To Transfer Out of AUDIX as a Subscriber:†

- Be sure that you've logged into AUDIX as a subscriber or that you have pressed *R to restart after being redirected to AUDIX. Do either **a** or **b**.
  a. Press *0. [You hear ''*Please wait,*'' followed by ringback tone. The call has been transferred to the covering extension.]

† This user procedure applies to both Enhanced and Basic Transfer out of AUDIX.

† This user procedure applies to both Enhanced and Basic Transfer out of AUDIX.

b. Press *T. [The following AUDIX message is heard: ‘‘*Please enter the extension followed by the pound sign. To transfer by specifying names instead, press star A.*’’]

Dial an extension, followed by #. [You hear ‘‘*Please wait,*’’ followed by ringback tone. The call has been transferred to the selected extension.]

To Return a Call:

- You just finished listening to an AUDIX message that was in your mailbox. [The following AUDIX message is heard: ‘‘*To respond to or forward this message, press 1. To delete this message, press star D. To skip to the next header, press the pound sign.*’’]
- If the call was from the local switch, press 1. [The following AUDIX message is heard: ‘‘*To reply to sender by voice mail, press 1. To forward the message with a comment, press 2. To create a new message, press 4. To call the sender, press 0.*’’]
- Press 0. [The AUDIX session is stopped, you hear ‘‘*Please wait,*’’ and a call is returned to the party that left the current message.]

CONSIDERATIONS

The following are the considerations for AUDIX in Release 2, Version 4.

Attendant Console

The attendant cannot operate Call Transfer into AUDIX because you can’t dial the access code from the console.

AUDIX Parameters

Table 14-1. Comparison of AUDIX Parameters

AUDIX SYSTEM	AMOUNT of SUBSCRIBERS (Light Usage)	AMOUNT of SUBSCRIBERS (Medium Usage)	AMOUNT of VOICE PORTS	HOURS of VOICE RECORDINGS
AUDIX-S	750	280	8	40
AUDIX-M	2000	750	16	80
AUDIX-L	4000	1500	32	200

For R2 V2 and V3 switches, up to four AUDIX adjuncts can be attached to a single switch. Beginning with R2 V4, up to eight AUDIX adjuncts can be attached to a single switch. (Flexible DCIU port assignments provide this increased capacity.)

The initial release of AUDIX limits functionality in a multiple AUDIX arrangement. For example, a subscriber can only be assigned to one AUDIX system, and cannot address messages (via the Voice Mailbox feature) to subscribers on other AUDIX adjuncts. However, a multiple AUDIX arrangement has little effect on AUDIX Call Answering and Leave Word Calling.

Busy Without Call Coverage

If the alternate destination is an extension on a remote DCS switch and is busy without Call Coverage, the transferring party hears a busy tone from the remote switch. The transferring party must end the call.

Call Transfer Telephone Requirement

To transfer out of AUDIX, the caller must use a telephone equipped with touch-tone dialing.

Calls Outside the DCS Network

The Transfer function works within the local switch (for a locally assigned AUDIX) or within a DCS (for a remote AUDIX). Calls can be transferred to a non-DCS switch if the extension is valid in the host switch's dialing plan.

DCS Switch Compatibility

To use Call Transfer Out of AUDIX in a DCS network, the host System 85 switch must run Release 2, Version 4 software. With Call Transfer into AUDIX, the host System 85 switch (the switch directly connected to the AUDIX adjunct), the System 85 switch where the principal resides, and the System 85 switch where the transfer is done, must run Release 2, Version 4 software.

Dial Access Codes

A call cannot be transferred out of AUDIX if the call requires a dial access code.

Failures that Occur in Call Transfer Out of AUDIX

Problem	Covered-Call Message	Subscriber Call Message
A call is directed to AUDIX, Call Transfer Out of AUDIX is active, but a covering extension has not been defined. **	*Your call is being answered by the Audio Information Exchange.* **Called Party's Name**, *extension <#>, is not available at this time. To leave a message, wait for the tone.*	*Your call is being answered by the Audio Information Exchange.* **Called Party's Name**, *extension <#>, is not available at this time. To leave a message, wait for the tone.*
A call is directed to AUDIX and Call Transfer Out of AUDIX is active. The caller presses 0 or *0, but a covering extension is not defined. **	*No operator has been assigned. To leave a message, wait for the tone.*	*No operator has been defined. You have been returned to your previous activity. For help, press star H.*
The caller presses *T to transfer out of AUDIX before leaving a message. The caller then enters an invalid extension number before pressing #. †	*Extension <#> is not valid. You may request another transfer by pressing star T, or you may leave a message for* **Called Party's Name** *at the tone. Record at the tone.*	*Extension <#> is not valid. You may request another transfer by pressing star T, or you may leave a message for* **Called Party's Name** *at the tone. Record at the tone.*
The caller presses *T to transfer out of AUDIX after leaving a message. The caller then enters an invalid extension number before pressing #. †	*Extension <#> is not valid. You may request another transfer by pressing star T.*	*Extension <#> is not valid. You may request another transfer by pressing star T.*
All line appearances for a destination on the host switch are busy and Call Coverage is not active. No message has been left. ‡	*That line is busy. You may request another transfer by pressing star T, or you may leave a message for* **Called Party's Name** *at the tone. Record at the tone.*	*That line is busy. You may request another transfer by pressing star T, or you may leave a message for* **Called Party's Name** *at the tone. Record at the tone.*
All line appearances for a destination on the host switch are busy and Call Coverage is not active. A message has been left. ‡	*That line is busy. You may request another transfer by pressing star T.*	*That line is busy. You may request another transfer by pressing star T.*

** This failure condition applies to both Enhanced and Basic Call Transfer Out of AUDIX.

† This failure condition **primarily** applies to Enhanced Call Transfer Out of AUDIX. However, Basic Transfer does validate the number of dialed digits.

‡ This failure condition **only** applies to Enhanced Call Transfer Out of AUDIX.

Failures that Occur in Call Transfer Out of AUDIX (Contd)

Problem	Covered-Call Message	Subscriber Call Message
On a transfer to a destination on a remote switch in a DCS arrangement, an outgoing trunk from the host switch to the remote switch is not available. No message has been left. ‡	*All circuits are busy. You may request another transfer by pressing star T, or you may leave a message for* **Called Party's Name** *at the tone. Record at the tone.*	*All circuits are busy. You may request another transfer by pressing star T, or you may leave a message for* **Called Party's Name** *at the tone. Record at the tone.*
While transferring to a destination on a distant switch in a DCS arrangement, an outgoing trunk from the host switch to the distant switch is not available. No message has been left. ‡	*All circuits are busy. You may request another transfer by pressing star T.*	*All circuits are busy. You may request another transfer by pressing star T.*
The DCIU link is down and AUDIX cannot negotiate transfer of the call with the switch. There is no option to try another transfer since it would probably fail also. ‡	*Your transfer cannot be completed. Try again later. Please disconnect.*	*Your transfer cannot be completed. Try again later. Please disconnect.*

Intercept Tone

For Call Transfer into AUDIX, the AUDIX transfer dial access code can only be used when transferring or conferencing a call. If the called party is not an AUDIX subscriber, an AUDIX split, or the called party's machine has not been administered, intercept tone is returned.

No Feature Button

For Call Transfer into AUDIX, no feature button can be administered to transfer a call to AUDIX.

Nonredirection of Transferred Call

For call transfer out of AUDIX, if the call is transferred to an unattended alternate destination that does not have Call Coverage active, the terminal can ring indefinitely. The transferring party must end the call. The call will **not** automatically return to AUDIX.

No Trunk Availability

If no outgoing trunks are available from the host switch, the transferring party hears an ''all circuits busy'' message from AUDIX. Covered-call users will then be able to leave a message or request another transfer. AUDIX subscribers are returned to the previous activity.

If no outgoing trunks are available from an intermediate remote switch (tandem switch) to the alternate destination remote switch, the transferring party hears a reorder tone from the tandem switch. The transferring party must end the call.

Redirection to AUDIX

If the call is transferred to an alternate destination that has Call Coverage active, the call could be

‡ This failure condition **only** applies to Enhanced Transfer Out of AUDIX.

redirected back to AUDIX.

Reorder Tone

While the DCIU link or every voice port is in an out-of-service condition, reorder tone is heard when a subscriber dials the AUDIX extension number.

For call transfer to AUDIX, if the DCIU link is down between the switch and AUDIX or if the AUDIX split is unstaffed, reorder tone is heard.

INTERACTIONS WITH OTHER FEATURES

The following System 85 features affect or are affected by the operation of this feature.

Abbreviated Dialing

For call transfer to AUDIX, an abbreviated dialing button can be programmed to contain the AUDIX dial access code.

Call Coverage and ACD (Automatic Call Distribution)

An AUDIX system can be used as the final point in a coverage path. However, the ACD split number, rather than an associated extension number, is used to assign the coverage point. Therefore, all coverage calls that are redirected to Call Answering by the AUDIX system are placed in the nonpriority queue.

Call Coverage and EUCD (Enhanced Uniform Call Distribution)

An AUDIX system can be used as the final point in a coverage path. However, the EUCD split number, rather than an associated extension number, is used to assign the coverage point. Therefore, all coverage calls that are redirected to Call Answering by the AUDIX system are placed in the nonpriority queue.

Call Coverage and Call Vectoring

A VDN (vector directory number) associated with a vector that queues calls to an AUDIX split can be assigned as the final point in a coverage path. When this is done, the full flexibility of the Call Vectoring feature can be applied to the redirected call. An AUDIX vector's processing could vary by time of day (to provide night service), by the status of the AUDIX split's queue (to provide intraflow or interflow), or by priority (to queue at any of four levels of priority).

Call Forwarding and Call Coverage

Call Forwarding and Call Coverage can be assigned to an AUDIX subscriber to redirect calls when the subscriber is unavailable. However, when both features are assigned, Call Forwarding takes precedence over Call Coverage in the following cases.

a. If Call Forwarding is active for an extension that has coverage, calls to that extension redirect according to Call Forwarding.

b. If a coverage point has Call Forwarding—Follow Me active, that point is not eligible to receive a coverage call.

Call Forwarding—Busy and Don't Answer

The Call Forwarding—Busy and Don't Answer feature cannot be used to forward calls to the AUDIX extension number. When this is attempted, the switch returns intercept tone.

Call Forwarding—Don't Answer

The Call Forwarding—Don't Answer feature cannot be used to forward calls to the AUDIX extension number. When this is attempted, the switch returns intercept tone.

Call Forwarding—Follow Me

The Call Forwarding—Follow Me feature can be used to forward all calls to the AUDIX extension number. When this is done, forwarded calls enter the AUDIX queue.

Call Vectoring

A vector can have a ''queue to main split'' step or a ''route to'' (AUDIX extension number) step that routes calls to an AUDIX split. However, if the DCIU link is down or if every voice port to that AUDIX is unstaffed, these calls are not directed to the AUDIX queue. Instead, the switch returns reorder tone to the calling party.

DCS (Distributed Communications System)

There are three cases where DCS transparency is not provided for Call Transfer Out of AUDIX for Release 2, Version 4:

- The alternate destination resides in a DCS node, the station is busy, and Call Coverage is not active.

- No outgoing trunks are available from an intermediate switch to the remote DCS switch.
- The default destination is a extension on another DCS node, and the extension is recently disconnected or not assigned.

IPA (Interpartition Access)

A partitioned System 85 is not aware of AUDIX user permissions. When a voice terminal user dials the AUDIX extension number, the switch follows the usual rules for terminal-to-terminal calling to reach the AUDIX system. Therefore the AUDIX extension number must either belong to the user's partition group or to Extension Partition 0.

After reaching the AUDIX system, messages can be left for, created by, or retrieved by any subscriber (regardless of the partition group the subscriber belongs to).

The Call Transfer To (and From) AUDIX functions are partitioned. A voice terminal user (in an extension partition other than Extension Partition 0) can transfer these calls to extension numbers in the same partition group or to extensions in Extension Partition 0. When the user tries to transfer these calls to any other partition group (using an extension number), the switch returns intercept treatment to the transferring party.

A voice terminal user in Extension Partition 0 is allowed to transfer these calls (using an extension number) to any voice terminal in the switch.

Last Extension Dialed

The Last Extension Dialed feature can redial calls to an associated extension number of an AUDIX system.

Last Number Dialed

The LND (Last Number Dialed) feature can redial calls to an associated extension number of an AUDIX system. However, the LND feature does not redial the AUDIX user's extension number, password, or the previously dialed digits to access the voiced AUDIX menus.

LWC (Leave Word Calling)

If the principal's LWC messages are stored on the AUDIX system, the originator of a LWC message cannot cancel the message. When the message originator tries to cancel the message, the switch will accept the request with confirmation tone. However, the LWC message is not removed from the principal's AUDIX mailbox.

LWC (Leave Word Calling) and DCS (Distributed Communications System)

The AUDIX adjunct can only voice the names of its own subscribers. Therefore, Leave Word Calling on the AUDIX adjunct can be transparent. If an AUDIX subscriber in another node activates LWC toward a principal served by the same AUDIX adjunct, the caller's name is included in the LWC message. However, if this caller is not served by the same AUDIX adjunct as the principal, the caller's name is not included in the LWC message. In this case, the AUDIX system is able to report the calling party's number.

Message Center Service

The AUDIX system can be used as a form of night service for a Message Center split. The Message Center split supervisor does this by using Call Forwarding—Follow Me to forward all Message Center calls to the AUDIX extension number. Refer to the ACD feature description for these user operations.

Tenant Services

A partitioned System 85 is not aware of AUDIX user permissions. When a voice terminal user dials the AUDIX extension number, the switch follows the usual rules for terminal-to-terminal calling to reach the AUDIX system. Therefore the AUDIX extension number must either belong to the user's extension partition or to Extension Partition 0.

After reaching the AUDIX system, messages can be left for, created by, or retrieved by any subscriber (regardless of the extension partition the subscriber belongs to).

The Call Transfer To (and From) AUDIX functions are partitioned. A voice terminal user (in an extension partition other than Extension Partition 0) can transfer these calls to extension numbers in the same extension partition or to extensions in Extension Partition 0. When the user tries to transfer these calls to any other extension partition (using an extension number), the switch returns intercept treatment to the transferring party.

A voice terminal user in Extension Partition 0 is allowed to transfer these calls (using an extension number) to any voice terminal in the switch.

Transfer

For call transfer to AUDIX, the Transfer function can be used for calls that have been redirected by the following redirection features:

- Call Coverage
- Call Forwarding
- Call Pickup
- Hunting

- Unattended Console Service.

HARDWARE REQUIREMENTS

The AUDIX hardware is available in three sizes: AUDIX-L, AUDIX-M, and AUDIX-S. Each configuration contains processors, interfaces, voice and data ports, disk drives, and related equipment.

Analog line circuits (SN228 or SN229) are required on the switch to provide voice connections with the AUDIX system.

Each subscriber interfaces with the AUDIX system using touch-tone dialing voice terminals. Touch-tone signals are used to enter commands to the AUDIX system for the Voice Mailbox features.

For a more complete description of the necessary hardware, see the Audio Information Exchange Reference Manual, 585-300-201.

For a more detailed description of hardware maintenance, see the Audio Information Exchange Maintenance Manual, 585-300-102.

FEATURE ADMINISTRATION

Administration of the AUDIX system must be done both on the switch and on the individual AUDIX adjuncts. A description of switch and AUDIX administration is available in the Audio Information Exchange Installation Manual (585-300-101 for AUDIX Large and 585-300-103 for AUDIX Medium). The Audio Information Exchange Administration Manual (999-700-503 IS for AUDIX Release 1, Version 1 or 585-302-501 for AUDIX Release 1, Version 2), is used for AUDIX administration only.

The following features should be administered using the AUDIX Installation Manual to enable AUDIX operation.

a. **ACD:** The ACD feature (previously called EUCD) serves as the gateway to the AUDIX system. ACD administration is presented in the ACD section of this document.

NOTE

An AUDIX-L adjunct can have as many as 32 voice ports. Therefore, an ACD gateway split should be configured to contain 16 or 32 (usually, 32) members.

An AUDIX-M adjunct can have up to 16 voice ports and an AUDIX-S adjunct can have up to 8 voice ports. Therefore, these ACD gateway splits should be configured to contain 16 members.

b. **Call Vectoring:** For R2 V4 System 85, the Call Vectoring feature can be used in conjunction with the ACD feature on a per-system basis. When this is done, some of the standard ACD functions are disabled and replaced by the more flexible vector processing. Call Vectoring administration is presented in the Call Vectoring section of this document.

c. **Touch-Tone Dialing:** The Touch-Tone Dialing feature serves as the subscriber interface to the AUDIX system. The administration for touch-tone voice terminals is presented in the Touch-Tone Dialing section of this document.

d. **Leave Word Calling:** The Leave Word Calling feature is available on the AUDIX adjunct. Leave Word Calling administration is presented in the Leave Word Calling section of this document.

e. **Call Coverage:** The AUDIX system can be assigned as the final point in a coverage path. If this function is elected, Call Coverage should be administered on the switch. Call Coverage administration is listed in the Call Coverage section of this document.

f. **Call Forwarding:** The AUDIX system can be assigned as the destination for Call Forwarding. If this function is elected, Call Forwarding should be administered on the switch. Call Forwarding administration is presented in the Call Forwarding—Follow Me section of this document.

g. **DCIU Links:** Data Communications Interface Unit links are necessary between the switch and the AUDIX adjunct. The DCIU administration for AUDIX follows.

System 85 DCIU Administration

PROCEDURE	WORD	PURPOSE	SMT
256	1	Administers the DCIU link characteristics.	No
256	2	Administers level 2 timers and counters for a DCIU link.	No
256	3	Administers level 3 timers and counters for a DCIU link.	No
257	1	Administers the components and priority status of a DCIU channel.	No
257	2	Administers DCIU ports for the DCIU channels.	No
257	5	Reserves a DCIU port for use by an AUDIX system (R2 V4 only).	No
258	1	Swaps (R2 V4) or copies translation changes made using Procedures 256 and 257.	No
258	2	Refreshes the DCIU temporary translation tables before using Procedures 256 and 257.	No
261	1	Provides the translation between an internal AP or AUDIX number and the network AP or AUDIX number.	Yes
261	2	Assigns the associated extension for each network number.	Yes
275	1	Assigns DCIU to the system class of service.	Yes
350	2	Assigns the Call Transfer into AUDIX dial access code. The applicable encode is: 58 Call Transfer to AUDIX.	No

The following is the applicable FM path name (used with the AP 16) for DCIU administration.

PATH NAME	PURPOSE
facilities-mgmt dciu link-assignments	Generates a report of the current DCIU link assignments.

The following are the applicable CSM Command Paths (utilizing the **admin** area of TCM or FM) for DCIU administration.

CSM SCREENS — MASKS AUDIX		
APPL'N	**OBJECT**	**PURPOSE**
FM	dciu-link	Administers the status and attributes of Data Communications Interface Unit (DCIU) links, which are logical channels used for carrying messages between the DCIU and the Audio Information Exchange (AUDIX).
FM	dciu-channel	Assigns network channels to provide logical pathways for transmission on DCIU links, also establishes the status assignment and priority level of the channel.
FM	dciu-route-codes	Administers alternate route codes assigned to a specific destination routing code. The codes are used to route messages between the DCIU and the AUDIX adjunct processor, or to route messages to another DCIU in a DCS (Distributed Communications Services) network.
FM	sys-cos	Assigns DCIU to the system class of service.

AUDIX Administration

- AUDIX System Administrator
  - — Call Transfer out of AUDIX is enabled and disabled on a per-AUDIX basis.
  - — The initial default number for the alternate destination is assigned on a per-system and/or a per-subscriber basis.
  - — If the switch numbering plan is changed, the default alternate destination should be changed. There is no notification or automatic process for changing the default numbers.
- AUDIX Subscriber
  - — If the switch numbering plan is changed, the default alternate destination should be changed. There is no notification or automatic process for changing the numbers.

DCIU Administration

Refer to Appendix D of this manual for detailed information about DCIU administration. This information includes some recommendations for typical administration of the DCIU.

AUTHORIZATION CODES

DESCRIPTION

Voice terminal users and attendants can use authorization codes in conjunction with the FRL (Facilities Restriction Level) feature. These codes add flexibility and improve the effectiveness of the FRL feature. Authorization codes can also be used for billing purposes, as a ‘‘movable’’ personal identifier.

The FRL (Facilities Restriction Level) Feature

The FRL feature protects network facilities from unauthorized use and limits access to critical facilities. An FRL is assigned to each originating facility (line class-of-service and incoming trunk circuit). This is the primary FRL (also known as the default FRL). When a user places a call, the switch selects a routing pattern based on the dialed digits. Then, the switch compares the FRL associated with the call (the default FRL of the originating line or trunk circuit) to the FRL of the first-choice trunk group. A call can only access trunk groups that have FRLs lower than or equal to the FRL of the calling circuit. If the call has a high enough FRL, the switch searches until an available trunk is found, or until a trunk group is reached that has a higher FRL than the calling facility. When a higher FRL is needed to continue searching for an available trunk, the switch prompts the caller for an authorization code.

Authorization Code Functions

Authorization codes provide an option with the FRL feature. The switch requests an authorization code only once during a call. When the caller dials an authorization code, the switch replaces the default FRL with the FRL assigned to the authorization code. Using the new FRL, the switch makes a second attempt to route the call. If this attempt fails and queuing is available, the switch tries to queue the call on the designated trunk group.

Private network trunk groups normally have low FRLs. Public network trunk groups and authorization codes usually have higher FRLs. This is based on the assumption that long distance calling over public network facilities is more expensive than if the same call is placed over private network facilities. [This may not always be true when FX (Foreign Exchange) or WATS (Wide Area Telecommunications Service) trunks are available.] Therefore, most employees can make private network calls, but only employees that have access to a high enough FRL can access the public network. High FRLs limit access to premium facilities such as expensive public network trunks, international service facilities, or sensitive private network trunk groups (such as high-speed digital trunks to data processing centers). Incoming trunk groups (i.e., tie trunks and remote access trunks) can be set up so that the switch always requests an authorization code. An authorization code allows a caller to override the FRL assigned to the terminal that the caller is using temporarily, for instance, another person’s terminal or a general use terminal.

Authorization codes can also be used as an option to Barrier Codes with the Remote Access feature. If the Authorization Code option is used for Remote Access, and an authorization code is later needed for FRL purposes, the authorization code does not need to be dialed again. The switch uses the same authorization code entry for FRL purposes.

Alternate FRLs

Each primary FRL can be assigned an alternate FRL value. To activate or deactivate the alternate FRLs, the attendant simply presses a button on the attendant console. When alternate FRLs are in effect, they replace default FRLs. This is true for the FRLs assigned to authorization codes as well as default FRLs assigned to equipment and facilities. The alternate FRLs can be more restrictive, less restrictive, or the same as the default FRL. Alternate FRLs are normally used during ''off hours'' when a different set of facility restrictions and controls may be desirable.

Feature History and Development

The Authorization Code feature and the related FRL feature were first available in System 85 with Release 1. Subsequent changes and enhancements have included the following:

- *Increase in Authorization Codes Available*

  The number of authorization codes available in a single switch was increased from 9,000 to 90,000. This enhancement was first available with Release 2, Version 3.

- *Validation Algorithm for Authorization Codes*

  In switches prior to Release 2, Version 3 (Release 2, Version 2 and earlier), the switch validates authorization codes using a predefined algorithm.

  Seed Digits, Check Digits, and Check Sum Digits: Each authorization code contains either three or four ''seed digits'' and from one to three ''check digits.'' Additionally, a ''check-sum digit'' is defined for each check digit.

  Using this algorithm, the seed digits are always the *leading digits* within a code, while the check digits always *follow* the seed digits. Each check-sum digit is the modulus 10 sum of a designated subset of seed digits and a check digit. Table 15-A shows the available options for assigning a switch's authorization codes.

Table 15-1. Authorization Code Parameters

Number of Digits in Authorization Codes	Number of Seed Digits	Number of Check Digits	Number of Check-Sum Digits Needed
4 Digits	3	1	1
5 Digits	4	1	1
	3	2	2
6 Digits	4	2	2
	3	3	3
7 Digits	4	3	3

- *Random Selection of Authorization Codes*

  In Release 2, Version 3 and later switches, the Validation Algorithm is no longer used. Instead, users are free to establish their own 4-, 5-, 6-, or 7-digit authorization codes on a random basis, or on

whatever basis best suits their needs. For example, the last four to seven digits of an individuals social security number, payroll account number, birth date, or personal extension number could be used. Coding schemes of this sort make it easier for users to remember their individual authorization codes. However, these switches are somewhat less secure than the Validation Algorithm or a pure random number system.

USER OPERATIONS

The following are the user operating procedures for this feature.

To Enter an Authorization Code

— An attendant or voice terminal user should:

- Place the call in a normal fashion. [Call-progress tone]

  (If an Authorization Code is needed, recall dial tone [three bursts of tone, followed by dial tone] is returned.)

- Enter the assigned Authorization Code. [Call-progress tone continued.]

CONSIDERATIONS

Limits

A Release 2, Version 3 switch can have up to 90,000 authorization codes.

In switches, prior to Release 2, Version 3, there can be up to 9,000 authorization codes.

The first digit of an Authorization Code can be any digit except the digit ‘‘1.’’ The digit ‘‘1’’ is used to direct the switch to try again with the same FRL. If this digit is used at the beginning of an authorization code, the switch will ‘‘try again’’ when the first digit is dialed, and the rest of the authorization code will not be read.

10-Second Timer

As the switch requests an authorization code with recall dial tone, a 10-second timer begins. An authorization code must be dialed before the timing elapses for the authorization code FRL to route the call. Otherwise, after a ‘‘1’’ is dialed or the timer elapses, the switch retries the call using the original FRL.

Rotary Dialing Terminals

On internal calls (calls originated on a local switch or within a DCS or Main/Satellite arrangement), there are no problems with using either a rotary or touch-tone dialing terminal. However, if an incoming call [over a CO (central office) or remote access trunk] requires an authorization code, a touch-tone dialing terminal or equivalent (a data terminal, using the keyboard dialing function) must be used; or the call must be placed using attendant assistance. A rotary dialing terminal cannot dial an authorization code over a CO or remote access trunk.

Digits Required

Authorization codes are required to have at least four digits. Up to seven digits can be used. Every authorization code assigned to a particular switch (or to all nodes in a DCS) must have the same number of digits.

Security

There should be enough digits within the authorization codes to expect probable failure for a person attempting to find a valid code by trial and error. A good margin of safety would be provided if the ratio of *possible codes* to *actual codes >= 100:1*. Table 15-B shows the recommended digit assignment for authorization codes.

Reviewing the Assigned Authorization Codes

For switches that use the validation algorithm (R2 V2 and earlier), the assigned authorization codes can be reviewed in Procedure 282, Word 1. When this is done, the MAAP or SMT displays these authorization codes in *numerical* order.

However, beginning with R2 V3, the method for storing authorization codes in switch memory changed. The assigned authorization codes can still be reviewed in Procedure 282, Word 1. But, the sequence of these displayed codes is no longer numerical. Instead, the MAAP or SMT displays the codes in the *same order* that they were *entered*. Displaying the authorization codes by order of entry gives the display an appearance of randomness.

Table 15-2. Recommended Digits for Authorization Codes

Number of Digits	Number of Possible Codes	Recommended Number of Actual Codes
4 Digits	9,000	1 to 90
5 Digits	90,000	91 to 900
6 Digits	900,000	901 to 9,000
7 Digits	9,000,000	9,001 to 90,000

Release 2, Version 3, Authorization Codes

In Release 2, Version 3, the authorization codes are entered by the user rather than provided by the switch. An authorization code can be from four to seven digits (in a single switch, all authorization codes must have the same number of digits). Procedure 281 is used to enter the number of digits that are to be used and which digits, if any, to delete.

When a user dials an authorization code (during a calling sequence), the switch searches for that code and its associated FRL and Network Access Flag. Three parameters are used by the switch to store and search for valid authorization codes. If the authorization codes are set up properly, these parameters help locate a valid authorization code.

Procedure 281 is used to tell the switch processor how many digits are to be dialed, and if more than four are used, what digits to delete. If a number scheme is used that inherently has common digits (i.e., payroll numbers that include department numbers or personal extension numbers that include a

common prefix), it is best to delete the most duplicated digits as this reduces the chances of duplicating authorization codes.

Hard Processor Swaps

Authorization codes and their corresponding FRLs are stored in a translation portion of switch memory. Therefore, these codes and their assigned FRLs will endure a hard processor swap.

INTERACTIONS WITH OTHER FEATURES

FRL (Facilities Restriction Level)

An FRL is assigned to each authorization code. This FRL can then be used instead of the default FRL assigned to the terminal being used.

IPA (Interpartition Access)

For switch security, strict partitioning is applied to Authorization Codes. Authorization Codes can only be assigned to an extension partition (not a partition group), and these codes cannot be shared by the extensions in a partition group.

Last Number Dialed

For switch security, the Last Number Dialed feature does not store or redial Authorization Codes.

Queuing

When the Authorization Code feature is active and Queuing is provided, AAR/ARS (Automatic Alternate Routing or Automatic Route Selection) calls may queue. The use of an authorization code does not inhibit queuing where applicable.

Remote Access

The Remote Access feature can use an authorization code instead of a barrier code. If this is done, no further request is made for an authorization code. The same entry is used by the switch if an authorization code is needed later to complete the call. If a barrier code is used to gain access to the Remote Access feature, the authorization code may be required later to complete the call. In this instance, the authorization code must be entered separately.

Tenant Services

In Procedure 281, Word 1, the amount of digits used in authorization codes is assigned on a system-wide basis. Therefore, every partition in a partitioned switch must use the same amount of digits.

In Procedure 282, Word 1, each authorization code is assigned to an extension partition. Users in different extension partitions are not allowed to share an authorization code, and the same code cannot be duplicated for use in more than one partition.

When a voice terminal user in a specific partition dials an authorization code, call-processing software checks to determine whether the code's associated partition matches the partition of the voice terminal used to place the call. If these partitions do not match, the switch returns intercept treatment to the calling party.

Traffic Measurements

Whenever an invalid authorization code is received from a voice terminal, remote access trunk, or an attendant, a traffic measurements peg count is incremented.

HARDWARE REQUIREMENTS

None.

FEATURE ADMINISTRATION

Assignment of the Authorization Codes feature is on a per-switch basis, using the MAAP (Maintenance and Administration Panel). The customer can partially administer this feature using the SMT (System Management Terminal) or FM (Facilities Management) feature. This feature can also be administered using CSM (Centralized System Management).

The following are the applicable MAAP and SMT procedures for Release 2, Version 3.

SYSTEM 85 RELEASE 2, VERSION 3 MAAP AND SMT PROCEDURES — AUTHORIZATION CODES			
PROCEDURE	**WORD**	**PURPOSE**	**SMT**
103	—	Administers network trunk group parameters including FRL and authorization code requirements for incoming tie trunks.	Yes
281	1	Administers the authorization code algorithm parameters. This includes the number of digits in an authorization code and which digits, if any, to delete.	No
282	1	Assigns a single authorization code and its FRL and network access flag.	Yes
282*	2	Displays the number of authorization codes that have been entered in the switch.	Yes
283	1	Displays the authorization codes, extension numbers, and trunk groups associated with a specific FRL.	Yes
285	—	Assigns authorization code requirements for access to ARS and network type (hierarchic or symmetric routing plan) to the network class of service. With symmetrical routing, tandem-to-tandem calls route only on the first-choice trunk group.	Yes
* Procedure 282 was changed for R2 V3 and later switches. The MAAP and SMT procedures for R2 V2 and earlier switches are shown in a separate table.			

The following are the applicable MAAP and SMT procedures for Release 2, Version 2, and earlier switches.

SYSTEM 85 RELEASE 2, VERSION 2 AND EARLIER MAAP AND SMT PROCEDURES — AUTHORIZATION CODES			
PROCEDURE	**WORD**	**PURPOSE**	**SMT**
103	—	Administers network trunk group parameters including authorization code requirements for incoming tie trunks.	Yes
281	1	Administers the authorization code algorithm.	No
282	1	Assigns an FRL and network access flag to a single authorization code.	Yes
282	2	Assigns an FRL and network access flag to a group of consecutive authorization codes.	Yes
282	3	Displays and changes the FRL for a group of up to ten consecutive authorization codes. The FRLs do not have to be the same.	Yes
282	4	Administers the public (off-net) to private (on-net) network access flags for up to ten consecutive authorization codes.	Yes
283	1	Displays the authorization codes, extension numbers, and trunk groups associated with a specific FRL.	Yes

The following is the applicable TCM path name used with the AP 16.

TCM SCREEN — AUTHORIZATION CODES	
PATH NAME	**PURPOSE**
terminal-change system parameters (select the Access-Codes option)	Enables the use of Authorization Codes for AAR/ARS.

The following is the applicable FM path name used with the AP 16.

FM SCREEN — AUTHORIZATION CODES	
PATH NAME	**PURPOSE**
facilities-mgmt facility-rest authorization-codes	Displays and changes the FRL and network access status associated with an authorization code(s). A printed report can also be generated.

The following are the applicable CSM Command Paths utilizing the **admin** area of TCM or FM.

CSM SCREENS — MASKS AUTHORIZATION CODES		
APPL'N	**OBJECT**	**PURPOSE**
FM	trk-grp	Administers network trunk group parameters including FRL and authorization code requirements for incoming tie trunks.
FM	auth-code	Assigns a single authorization code and its FRL, network access flag, and its extension partition.
FM	alt-frl	Assigns authorization code requirements for access to ARS. Enables or disables authorization code, and suppresses AAR dial tone (if required).
FM	altfrl-ctrl	Assigns alternate FRL patterns and types of referral for ACA.

AUTOMATIC ALTERNATE ROUTING

DESCRIPTION

The AAR (Automatic Alternate Routing) feature provides alternate routing of private network calls. With alternate routing, more than one route can be made available for a call to reach its final destination.

For calls between two points (switches), available routes are grouped into routing patterns. Routing patterns are ordered lists of the trunk groups the switch can use to complete a particular call. Each routing pattern has one or more trunk groups. For patterns with more than one trunk group, the trunk groups are arranged in order of preference (first-choice, second-choice, etc.).

Figure 16-1 illustrates a typical AAR arrangement for private network calls between distant cities (in this example, Los Angeles, Phoenix, and San Diego). The first-choice trunk group in a routing pattern is usually the most direct and economical route available. For a call from Los Angeles to Phoenix, this would be trunk group 41. If this route is busy, the switch has another chance to extend the call using an alternate route, trunk group 46 to San Diego and then to Phoenix via trunk group 47. If this route is also busy, there is yet another alternative, trunk group 22 to the public network.

The more alternate choices a routing pattern has, the better the chance that a call will complete on the first calling attempt. During periods of peak demand, AAR lowers the probability that calls must be redialed because of busy trunk facilities.

FRL (Facilities Restriction Level)

Each trunk group in a routing pattern has an FRL (Facilities Restriction Level). When a voice terminal user places a call, the switch selects a routing pattern based on the first three digits (location code) of the dialed 7-digit private network number. Then, the switch compares the FRL associated with the call (the default FRL) to the FRL of the first-choice trunk group. The call can only access a trunk group that has an FRL that is lower than or equal to the default FRL. If the call has access to the first-choice trunk group, the switch checks it for an available trunk. If all trunks are busy, the switch checks each alternate trunk group to which the call has access. If the call still fails to route and a higher FRL would allow access to more trunk groups, the switch prompts the caller (recall dial tone) for an authorization code.

Authorization Code

Using the FRL associated with the *authorization code*, the switch makes another attempt to find an available trunk. If the new FRL is still too low, the switch tries to *queue* the call on the first-choice trunk group. The caller's FRL (either the default FRL or the authorization code FRL) must allow access to the first-choice trunk group before the call can be queued. The trunk group's queue length (number of calls allowed in queue) must also allow access to queuing. If queued, the switch checks the first-choice trunk group every 2 seconds for an idle trunk. If no trunk becomes idle before the time-in-queue limit is

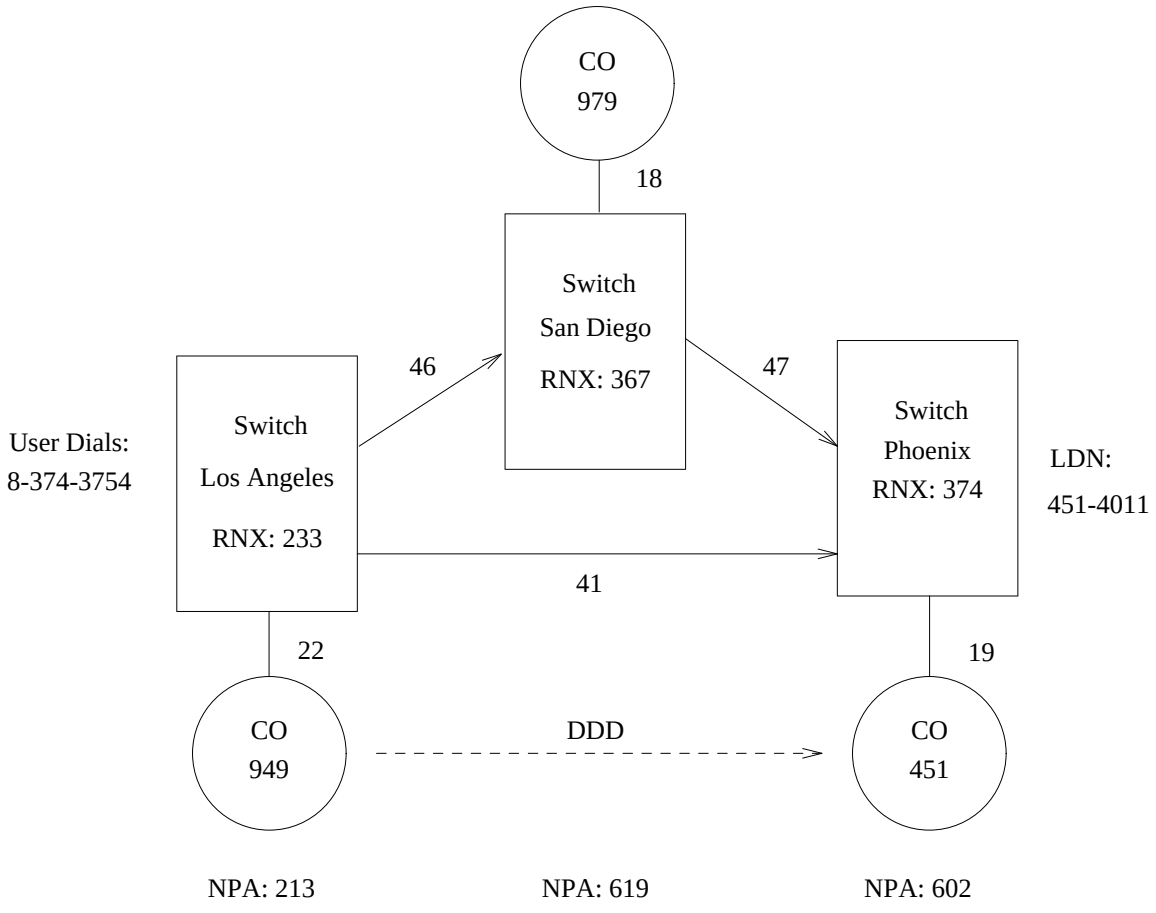

User Dials:	LA Outpulses	On TG	To	DID?
8-374-3754	374-3754	41	PH	-
	374-3754	46	SD	-
	1-602-451-3754	22	CO	Yes
	1-602-451-4011	22	CO	No

Figure 16-1. Automatic Alternate Routing

exceeded, the switch makes a ‘‘last try’’ on all accessible trunk groups (as determined by the FRL) in the pattern.

Pattern Queuing

The Pattern Queuing option allows any number of trunk groups in the pattern to be checked for an idle trunk during the entire queuing process. The switch may check the first-choice trunk group only (ignoring Pattern Queuing), or the first two trunk groups, etc. If Pattern Queuing indicates that three of ten trunk groups are to be checked, the switch still checks all ten during the ‘‘last try.’’ When a call is placed in queue, it still queues on the first-choice trunk group and is restricted by that trunk group’s queuing

parameters (queue length, time-in-queue, etc.).

> **CAUTION**: Care must be exercised when setting the number of trunk groups to be included in Pattern Queuing. Increasing the number of trunk groups to be checked means an increase in processing time. If this added processing time does not produce a significant increase in calls served, queues could begin to overflow.

Uniform Numbering

Uniform numbering, to draw an analogy, is the mortar that binds a private network together. Each terminal on the network is assigned a 4-, 5-, 6-, or 7-digit destination code that uniquely identifies it to the rest of the network. Network size determines how many digits are needed. In small networks, a destination code may only need four digits; while large networks may require as many as seven digits. Each destination code has a 2- or 3-digit location code, plus an extension number of from 2 to 5 digits.

Location Code

The location code has the form RNX, where R equals any digit 2 through 9 except the SMDR (Station Message Detail Recording) account code prefix, and X equals any digit 0 through 9. To reach a terminal assigned to another switch on the private network, the caller dials the AAR access code, plus the location code, plus the extension number. To reach another terminal on the same switch, a caller only has to dial the extension number. When a 10-digit DDD (Direct Distance Dialing) number follows the AAR access code, the call routes via the ARS (Automatic Route Selection) feature.

Overflow to the Public Network

Typically, the first-choice trunk group in an AAR pattern will be a direct (private network) path to the destination switch. Alternate routes, however, may require the use of public network facilities. At the customer's option, an AAR routing pattern may contain public network trunk groups (Foreign Exchange, Wide Area Telecommunications Service, or local Central Office). Normally, public network trunk groups are either the last choice or the only choice in an AAR routing pattern. The switch routes an AAR call via a public network trunk group only if all private network trunk groups are busy or the routing pattern has no private network trunk groups. When a call is rerouted from a private network pattern to a public network pattern (or vice versa), the destination code is changed to conform to the uniform numbering plan of the new network. The method used to accomplish this is called subnetwork trunking.

Subnetwork Trunking

The switch uses software routines to modify the format of the dialed number. These software routines can insert digits, delete digits, regroup digits, or insert pauses between digits, as necessary to change the destination code to conform to a new uniform numbering plan. The destination code modification capabilities of subnetwork trunking available from the System 85, Release 2, Version 3 switch are as follows:

- Up to seven digits can be deleted from the front of a destination code
- Up to 20 digits can be inserted in place of the deleted digits
- Digits can be inserted in up to four groups
- A group can have up to 15 digits.

Both public and private network trunk groups can be accessed through subnetwork trunking routines. Transparent access to any long-distance vendor, called IXC (Interexchange Carrier) Access, is also available. Trunk groups that involve a toll charge can be set up to give a 1-second warning tone. After hearing the tone, the caller can either let the call proceed or hang up and try again later when a less expensive trunk facility is available.

Routing to Private Network Locations in Foreign Countries

Another convenience AAR offers is private network routing to locations in foreign countries. The caller dials a 7-digit number of the form RNX-XXXX, where RNX is the location code for the destination (private network) switch and XXXX is the final four digits of the IDDD (International Direct Distance Dialing) number. Subnetwork trunking converts the RNX to the appropriate country and city codes for the overseas central office that serves the private network location. An IDDD route is always the only choice in this type of routing pattern.

Generalized Routing

Conditional Routing is the first implementation of Generalized Route Selection and is available only on Release 2, Version 3 and later switches. Generalized Route Selection uses a set of call attributes for routing selection rather than just the RNX dialed by the user. Each different set of attributes defines a different call category.

Conditional Routing

Conditional Routing, also known as Satellite Hop Control, is the only attribute currently available. Conditional routing counts the number of satellite links a call has used to reach the local switch (hence the name satellite hop control). It ranges from 0 to 2. The three possible call categories are:

- Call Category 0—Satellite count = 0
- Call Category 1—Satellite count = 1
- Call Category 2—Satellite count = 2.

If two satellite links have already been used, the use of additional satellite links may introduce signaling delays and signal degradation. Therefore, AAR must select a pattern that will not use more than two satellite links.

The satellite count associated with the call is sent as a TCM (Traveling Class Mark). It follows the FRL (Facilities Restriction Level) TCM when used. The local switch may receive a destination code, followed by the callers FRL TCM, followed by the Conditional Routing TCM. The Conditional Routing TCM is

matched against a call category that in turn is used to select a pattern. Patterns not assigned to the call category cannot be used for routing. So a call with a satellite count of 2 can be prevented from accessing a pattern containing any satellite links by assigning the pattern to Call Category 0 and/or Call Category 1. It is not necessary at this time to convert from satellite count to call category. However, as new attributes are added in future releases, the need for distinct call categories will develop.

Feature History and Development

The AAR feature was first available on System 85 in Release 1. The following enhancements have been made to this feature since its introduction:

— During Release 1, System 85 switches allowed for as many as 180 AAR routing patterns. In R2 V1, the maximum number of patterns was increased from 180 to 255. In R2 V3, the maximum number of patterns was increased from 255 to 640.

— In R2 V3, the maximum number of trunk groups in a pattern was increased from 4 to 16.

— In R2 V3, Conditional Routing was added to limit the number of satellite links used in extending a call.

— In R2 V3, Pattern Queuing was added so that a call can queue on any trunk group in a pattern.

— In R2 V3, subnetwork trunking was enhanced to provide IXC Access: customer-defined access to any long-distance vendor. The following are included in this enhancement.

- Seven digits can be deleted from the front of the destination code (no change).
- Twenty digits can be inserted in the place of the deleted digits (increased from 12).
- Digits can be inserted in up to four groups (no change).
- A group can hold a maximum of 15 digits (increased from 7).

Flow Diagram

To help conceptualize this complex feature, a flow diagram is provided in Figure 16-2. This diagram does not show all of the decisions made in the AAR software. The diagram does, however, unify many of the different AAR functions.

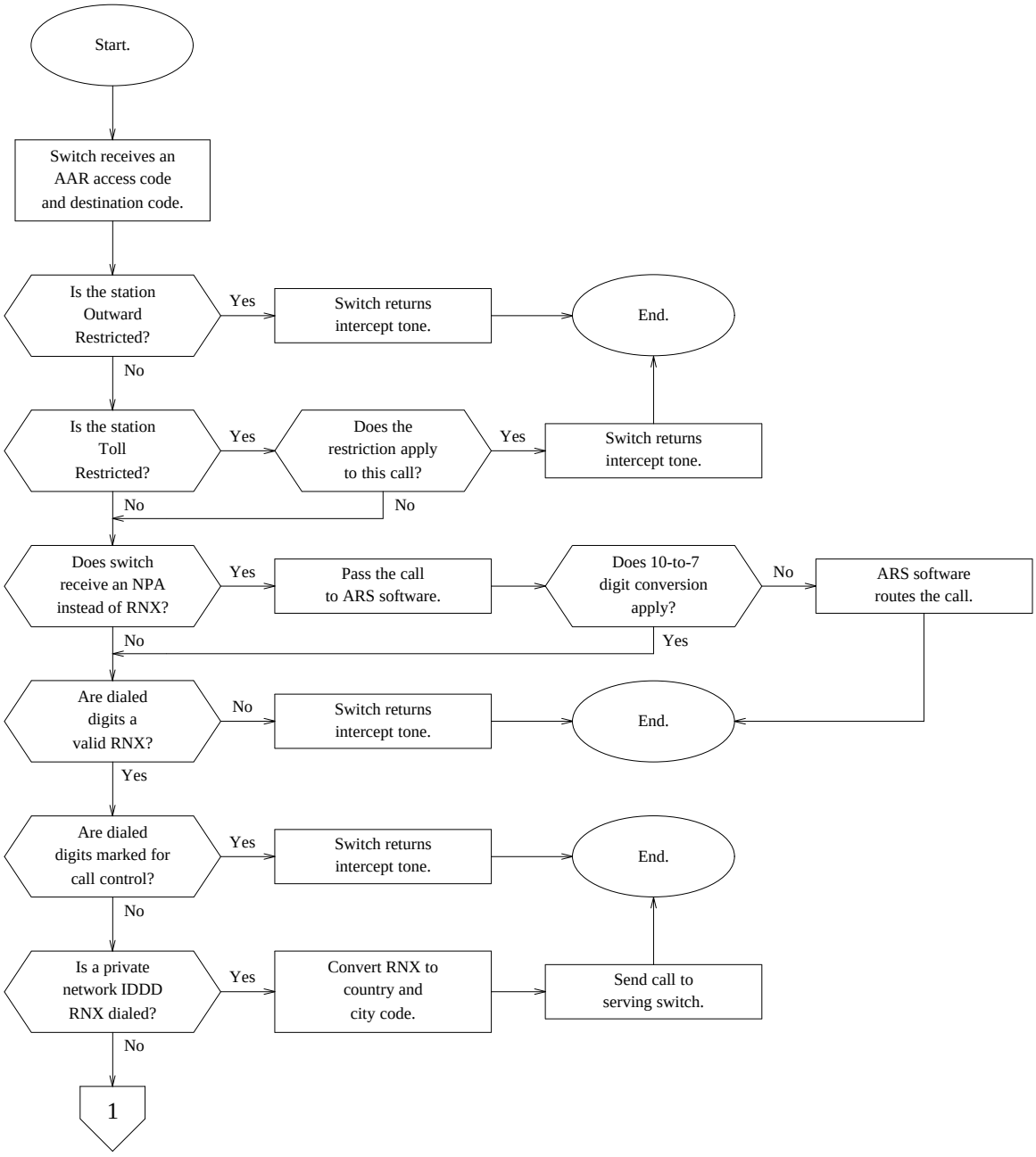

Figure 16-2. AAR Feature Flow

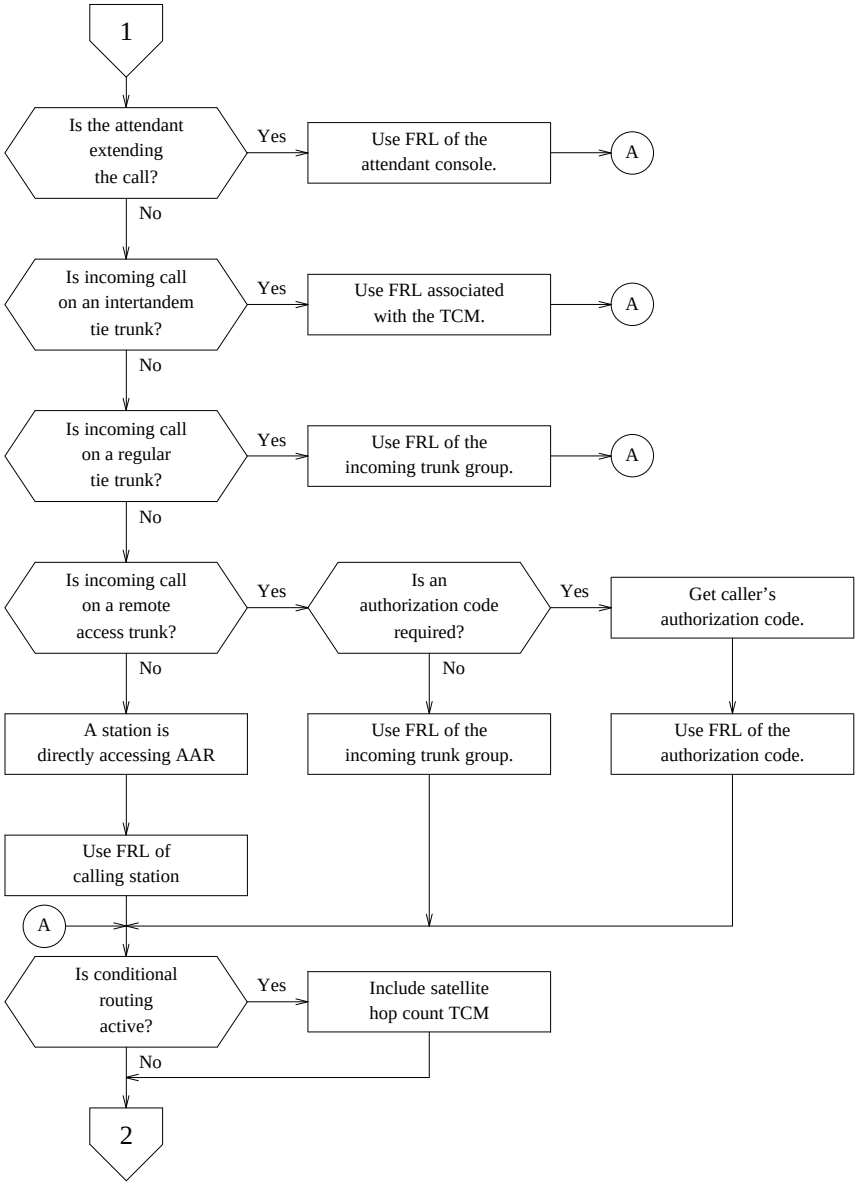

Figure 16-3. AAR Feature Flow (Sheet 2 of 3)

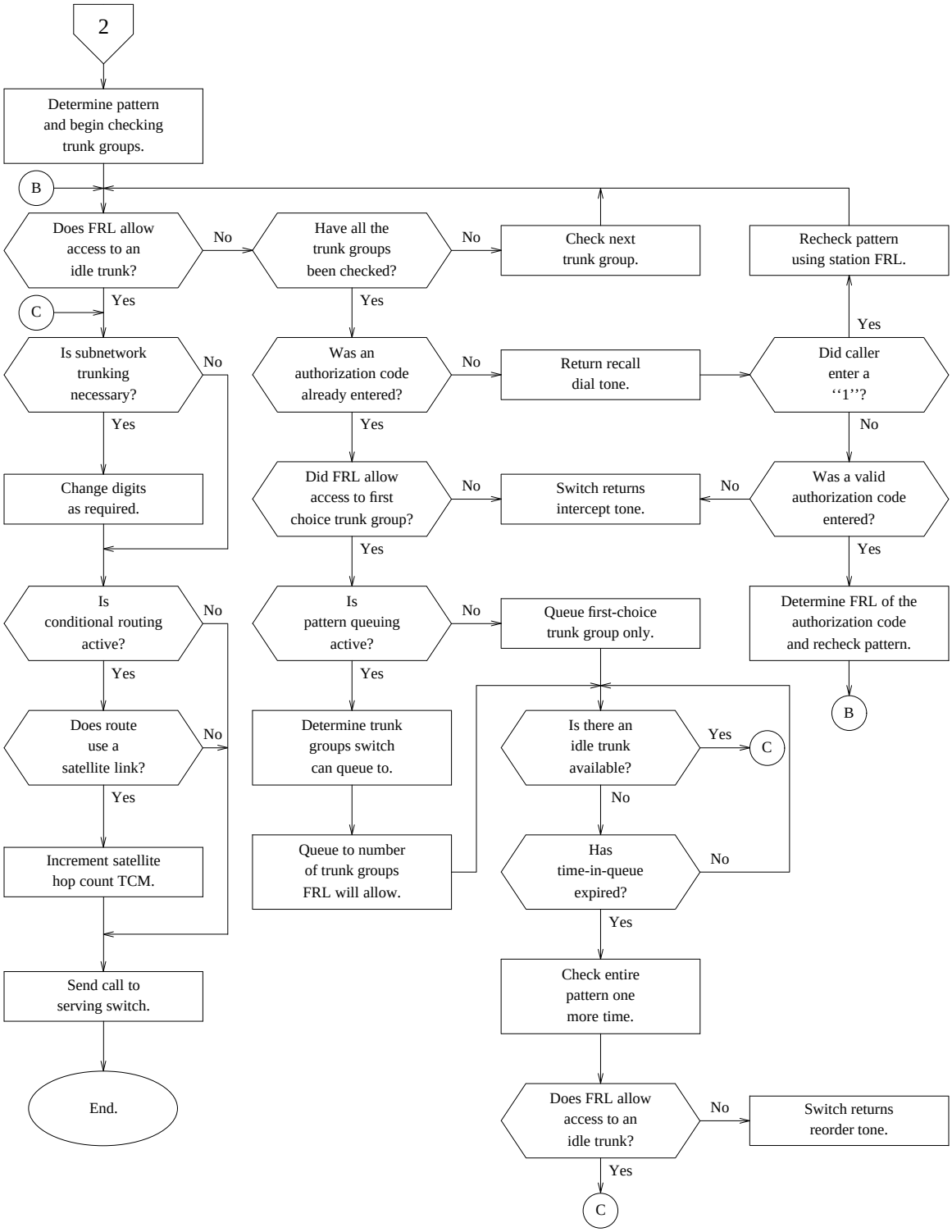

Figure 16-4. AAR Feature Flow (Sheet 3 of 3)

CONSIDERATIONS

Inferred Routing

Certain tie trunks can be administered (see Procedure 103 in the Feature Administration section of this feature) to always route incoming calls to AAR or ARS. These calls are said to ‘‘infer’’ AAR or ARS routing, meaning that the switch automatically inserts the private network access digit ahead of the received digits and then routes the call. The trunk types that infer AAR or ARS routing are as follows:

- 2-way intertandem tie trunk: wink start in/delay dial or wink start out (trunk type 41)
- 1-way incoming intertandem tie trunk: wink start (trunk type 42)
- 1-way outgoing intertandem tie trunk or bypass access tie trunk: delay dial or wink start (trunk type 43)
- 2-way access tie trunk (main-tandem connection): dial repeating in/ delay dial or wink start out (trunk type 46).

Data Only Routing Patterns

For data only applications, specifically where data calls are originated over DS1 AVD (Alternate Voice Data) trunks, AAR data call routing patterns must be separate from patterns used for voice calls. Routing patterns for data calls should minimize tandem connections. All trunk groups in a data only pattern must be suitable for data transmission. DS1 AVD trunk groups must not overflow to voice-grade trunk groups, or the introduction of modems (through the Modem Pooling feature) at the destination end will result in handshake failure.

Hard and Soft Processor Swaps

The contents of the AAR routing patterns are stored in a translation portion of switch memory. Therefore, these patterns will endure a hard processor swap.

AAR queues are stored in a status portion of memory. Therefore, if an AAR call is queued to a pattern when a hard swap occurs, the call is never routed to the private network. The queue is cleared.

Stable AAR calls will endure a hard processor swap. However, an AAR call cannot be placed during a hard swap.

The AAR feature operates normally during a soft processor swap.

INTERACTIONS WITH OTHER FEATURES

The following features affect or are affected by the operation of this feature.

Call Vectoring

In Procedure 010, Word 3, an FRL can be assigned to VDNs for use with the ‘‘route to’’ command. The FRL of a VDN is used to determine whether the call is allowed to route over available private network facilities.

Data Call Setup

The AAR feature can be used to improve the routing of data calls just as it is for voice calls. Separate routing patterns are required, however, to prevent voice calls from terminating on data extensions and vice versa.

DCS (Distributed Communications System)

A DCS can be administered as either a Main/Satellite network (4-digit dialing plan) or as an ETN (Electronic Tandem Network). If a DCS is administered as an ETN, the AAR feature is used for internode call routing.

Extension Number Portability

AAR must be used to route calls inside a portability subnetwork. Rather than assigning an RN(X) to the pattern, a node is assigned. Extension Number Portability requires routing decisions at several points in the digit-collection process. This results in additional call-setup time. Touch-tone dialing is recommended to reduce the call-setup time as much as possible.

ISN (Information Systems Network) Interface

Provided that Modem Pooling is available, ISN data stations can use the AAR feature when placing private network calls through the System 85.

ISDN (Integrated Services Digital Network)/PRI (Primary Rate Interface)

Calls placed over ISDN facilities use the AAR or ARS features for ISDN access. To work effectively for ISDN, the **generalized route selection** version must be in effect. In this way, placing an ISDN call is transparent to the user. AAR and ARS patterns are selected according to calling party COS (class-of-service) and trunk bearer capability.

COS (Class-of-Service): The AAR and ARS pattern searches work differently for ISDN calls based on the calling station COS. For ISDN, the calling parties COS specifies one of three options as follows:

ISDN Facilities Required

If ISDN facilities are required by a user's class of service, only ISDN end-to-end facilities are to be used for AAR or ARS routing. If ISDN end-to-end connections are not available, the call will either queue or receive reorder treatment.

ISDN Facilities Preferred

If ISDN facilities are preferred but not required by the COS, ISDN facilities are checked first, followed by a check for non-ISDN facilities.

Any Facilities Available

Any available facilities can be used to complete the call. In this case, AAR and ARS pattern searches work like they do for a non-ISDN call.

Bearer Capability

The bearer capability of an ISDN trunk (i.e., the type of call the trunk can support) is another factor used by the AAR/ARS pattern selection process in determining which trunk group to use for a particular ISDN call. For ISDN purposes, five types of bearer capability are recognized:

Bearer Code	Type of Traffic That Can Be Carried
0	Voice and voice-grade data allowed
1	Mode 1 data, 56 Kbps allowed
2	Mode 2 data, 64 Kbps allowed
3	Mode 3 data
4	Mode 0 data.

Last Number Dialed

Redial by the LND (Last Number Dialed) feature utilizes all of the AAR routing digits including IXC (Interexchange Carrier) Access as though the call were manually dialed. The LND feature will also store and redial the AAR access code.

For switch security, the LND feature does not store or redial Authorization Codes.

Precedence Calling

AUTOVON (Precedence Capable) trunk groups must not be included in AAR patterns. AAR can be used to route incoming precedence calls within a DCS. AUTOVON routing patterns are set within the DCS in administrative Procedure 305, Word 1.

Queuing

An incoming tie trunk that infers AAR routing cannot have ringback queuing.

Tenant Services

The AAR feature is not partitioned. So, a partitioned System 85 *cannot serve as a tandem node* for any tenant's private network. However, with proper assignment, a partitioned System 85 *can serve as an endpoint* for one or more tenants' private networks.

To allow an extension partition to serve as an endpoint in a private network, the partition should be administered as a satellite in a Main/Satellite configuration (where the main also serves as a tandem node in the private network). The tie trunks connecting the main and the ''satellite partition'' must be *dedicated to* the partition to prevent unexpected access by other partitions. Under this arrangement, outgoing calls route from the satellite partition to the rest of the private network according to the partitioning assignments. Incoming calls route from the main to the satellite partition according to Extension Number Steering.

Touch-Tone Calling Senderized Operation

When the Automatic Alternate Routing feature uses subnetwork trunking, each call requires a touch-tone calling sender. If a sender is not available, the switch denies the call.

Variable Format Call Detail Recording

A user can dial the account code before dialing the AAR access code.

RESTRICTING FEATURE USE

The attendant can restrict access to AAR or change FRL values with the following features:

- Attendant Control of Voice Terminals
- Alternate FRLs
- Attendant Control of Trunk Group Access.

Fixed restrictions that deny terminal users access to AAR include:

- Origination Restriction
- Outward Restriction
- Terminal-to-Terminal Only Calling.

HARDWARE REQUIREMENTS

The AAR feature requires touch-tone calling sender (SN252) circuit packs. These circuits reduce call completion time.

FEATURE ADMINISTRATION

Assignment of the Automatic Alternate Routing feature is on a per-switch basis. The customer can partially administer this feature using the SMT (System Management Terminal), TCM (Terminal Change Management) feature, or FM (Facilities Management) feature. The feature can also be administered using CSM (Centralized System Management).

The following are the applicable MAAP and SMT procedures.

MAAP AND SMT PROCEDURES — AUTOMATIC ALTERNATE ROUTING			
PROCEDURE	**WORD**	**PURPOSE**	**SMT**
012	1, 2, 3	Assigns distinctive names to trunk groups.	Yes
100	1	Assigns a trunk dial access code and trunk type to a trunk group.	
101	—	Administers the characteristics of trunks assigned to a trunk group.	No
102	—	Assigns trunk groups (via dial access code) to miscellaneous trunk restriction groups.	Yes
103	—	Administers network trunk group parameters including: minimum FRL, authorization code requirements, incoming tie trunk access to AAR and ARS, Conditional Routing attributes, and the number of trunks that are reserved for first-choice AAR and ARS trunk groups. If Field 3 equals ‘‘1,’’ incoming calls on this trunk group (Field 1) infer AAR or ARS routing (see the Considerations section of this feature).	Yes
110	—	Assigns restricted dial code entry numbers to trunk dial access codes.	No
111	—	Administers restricted dial code entry numbers associated with trunk groups for tandem tie trunk and trunk-to-trunk restrictions.	No
150	—	Assigns trunks (via equipment location) to a trunk group.	No
175	—	Displays the trunk groups assigned to a miscellaneous trunk restriction group.	Yes
176	—	Displays the trunks assigned to a trunk group.	No
177	—	Displays the trunks assigned to a trunk group or trunk dial access code.	No
200	—	Administers attendant console features including: Direct Trunk Group Selection feature, class-of-service display, trunk test, and FRL for the consoles as a group.	No
202	—	Administers the Direct Trunk Group Select buttons (attendant console) and the BUSY/WARNING level for a trunk group(s).	No

MAAP AND SMT PROCEDURES
AUTOMATIC ALTERNATE ROUTING (Contd)

PROCEDURE	WORD	PURPOSE	SMT
275	3	Assigns miscellaneous attributes to the system class of service including the home NPA (area code).	Yes
285	—	Assigns network parameters to the system class of service including: network type (hierarchic or symmetric routing plan), barrier code and authorization code requirements, automatic circuit assurance, number of location code (RNX) and terminal digits, and the designated extension number for trunk verification. With symmetrical routing, tandem-to-tandem calls route only on the first-choice trunk group.	Yes
320	1	Assigns routing attributes to call categories.	Yes
321	1	Administers routing pattern parameters for AAR including: trunk group number, FRL, warning tone, off net (to a DDD or IDDD location), number of digits deleted for an on-net route, whether network has 0XXX extension numbers or not, and the IXC identifier (0 - no IXC).	Yes
321	2	Defines the digit grouping and dialing format (touch-tone or rotary) for a trunk group in an AAR pattern that uses subnetwork trunking.	Yes
321	3	Defines the digits to insert for a trunk group in an AAR pattern that uses subnetwork trunking.	Yes
321	4	Associates a location code (RNX) and call category with an AAR pattern number.	Yes
330	1	Assigns the number of trunk groups in a pattern used for queuing. A ‘‘1’’ indicates the first choice only. A ‘‘7’’ indicates the first seven.	Yes
350	1	Assigns the first digit of a trunk dial access code, a feature dial access code, or an extension number. The first digit is defined in terms of the number of digits the switch expects to receive and call type.	No
350	2	Assigns feature access codes for terminal (station) and attendant features.	No

The following are the applicable TCM path names used with the AP 16.

TCM SCREENS — AUTOMATIC ALTERNATE ROUTING	
PATH NAME	**PURPOSE**
terminal-change class-of-service attributes	Assigns miscellaneous trunk restrictions to a line class-of-service. These restrictions include: Inward, Outward, and Full. This screen also assigns an FRL to a line class-of-service.
terminal-change system parameters	Assigns an authorization code for access to AAR routing patterns.
terminal-change names trunk-group-names	Assigns distinctive names to trunk groups.

The following are the applicable FM path names used with the AP 16. A printed report of the displayed information can also be generated.

FM SCREENS — AUTOMATIC ALTERNATE ROUTING	
PATH NAME	**PURPOSE**
facilities-mgmt routing alternate-routing patterns	Displays and changes attributes associated with an AAR pattern including: - Pattern number - Preference [first- to fourth-choice group (R2 V1 and R2 V2)] [first- to sixteenth-choice (R2 V3)] - Trunk group number - Minimum FRL - Off network-signaling, international destination, DID at destination, inserted digits - On network-digits deleted, and warning tone.
facilities-mgmt routing alternate-routing location-codes	Displays and changes an AAR pattern and associated call category assigned to a location code.
facilities-mgmt routing alternate-routing call-category	Assigns attributes to call categories.
facilities-mgmt routing alternate-routing rearrangement	Displays and changes the trunk groups that make up an AAR pattern. If the pattern does not use subnetwork trunking, trunk groups can be removed or reordered.
facilities-mgmt routing conversion	Displays and changes the correspondence between a private network location code and the public network telephone number that routes to that location code (refer to the ARS feature description for an explanation of 10-Digit Conversion). Either the location code or the public network destination code (telephone number) can be entered, and the corresponding values are displayed.

The following are the applicable CSM Command Paths utilizing the **admin** area of TCM or FM.

CSM SCREENS — MASKS AUTOMATIC ALTERNATE ROUTING		
APPL'N	**OBJECT**	**PURPOSE**
TCM	consoles-features	Administers features to all attendant consoles on a switch. These features include: Direct Trunk Group Selection, class of service display, trunk test(s) and FRL(s) for the consoles as a group.
TCM	direct-trk-grp-keys	Assigns Direct Trunk Group Select buttons (attendant console), and the BUSY/WARNING level for a trunk group(s).
TCM/FM	sys-cos	Assigns miscellaneous attributes to the system class of service including the home NPA (area code).
FM	trk-grp	Assigns distinctive names to trunk groups. Assigns a trunk dial access code and trunk type to a trunk group. Administers the characteristics of trunks assigned to a trunk group and defines the features of the trunk group. Administers network trunk-group parameters including minimum FRL, authorization code requirements, incoming tie trunk access to AAR and ARS, Conditional Routing attributes, and the number of trunks that are reserved for first-choice AAR and ARS trunk groups. Assigns trunks (via equipment location) to a trunk group.
FM	misc-trk-rst-grp	Assigns a dial access code to a trunk group if the trunk group is a member of the restriction group.
FM	tandem-trk-grp	Assigns restricted dial codes entry numbers to trunk dial access codes. Administers restricted dial code entry numbers associated with trunk groups for tandem tie trunk, trunk to trunk, and tandem tie to trunk restrictions.
FM	sys-cos	Assigns network parameters to the system class-of-service including network type (hierarchic or symmetric routing plan), barrier code and authorization code requirements, automatic circuit assurance, number of location code (RNX) and terminal digits, and the designated extension number for trunk verification. Also assigns the system class of service to the DCIUs and ISDN.

CSM SCREENS — MASKS AUTOMATIC ALTERNATE ROUTING (Contd)		
APPL'N	**OBJECT**	**PURPOSE**
FM	alt-frl	Administers the alternate Facilities Restriction Levels (FRLs) associated with trunk group FRLs 0 through 7.
FM	altfrl-ctrl	Activates or deactivates the use of alternate Facilities Restriction Levels (FRLs) on a given switch. Once the alternate FRL feature is activated on a given switch, the attendant can put alternate FRLs into effect from the attendant console.
FM	aar-call-categories	Changes or displays the call-category value and the AAR conditional routing count for the Generalized Routing Selection feature. These values are used by the Satellite Hop Control feature. The call-category value indicates how many satellite hops are allowed. The conditional routing count indicates the number of satellite links that have already been used to route the call.
FM	aar-non-portability	Administers AAR patterns assigned to Location Codes (RNXs) for PBXs that are not part of a station number portability network. Designates call categories for Satellite Hop Control if the switch supports this feature.
FM	aar-pattern	Administers AAR patterns and the preferences associated with them. An AAR pattern is used to provide alternate routing for calls on a private network. The purpose is to have calls follow the most direct path. Each pattern consists of an ordered list of trunk groups indicating the preferred routing for calls in the network. If the first trunk group in the list is not available, the next available trunk in the pattern is chosen automatically. Subnetwork trunking data may be administered for destinations requiring digit manipulation. The Interexchange Carrier (IXC) access digits are administered as the IXC/ISDN.

CSM SCREENS — MASKS AUTOMATIC ALTERNATE ROUTING (Contd)		
APPL'N	**OBJECT**	**PURPOSE**
FM	aar-portability	Administers the two options needed for the Station Number Portability feature. The two options are Location code (RNX) to first digit mapping and Node number to pattern number mapping.
FM	sys-queue	Administers queuing on a switch, and changes or displays queuing information.
TCM/FM	first-digit	Adds or removes a first dialed digit to or from the dialing plan. Administers the number of digits and the call type (extension or trunk/feature) dial access code (DAC) that is associated with the first dialed digit.

AUTOMATIC CALL DISTRIBUTION

DESCRIPTION

The ACD (Automatic Call Distribution) feature permits incoming trunk calls, local voice terminal calls, and attendant extended calls to terminate to the most idle voice terminal in a group of terminals. The answering positions appear as normal voice terminals to the switch and are also able to place and receive calls in the usual manner. This feature can provide an economical alternative to Direct Inward Dialing for departments that receive a high volume of similarly natured calls. Selected terminal users (agents) can be organized into a split (collection of agents) to allow for balanced call distribution to the agents.

The ACD call distribution routines serve as the gateway to Message Center, with the Message Center agents residing in an ACD split. This balances the call distribution to Message Center agents. All of the following ACD functions can be applied to ACD splits containing Message Center agents.

The ACD call distribution routines also serve as the gateway to AUDIX (Audio Information Exchange), allowing effective use of the AUDIX facilities. Appropriate ACD functions (e.g., recorded announcements and music on hold for callers) can be applied to the AUDIX gateway.

Feature History and Development

This feature was first available in Release 2, Version 3, to replace and enhance the functionality provided by the EUCD (Enhanced Uniform Call Distribution) feature that was included in Release 2, Version 2. Likewise, the EUCD feature replaced the UCD (Uniform Call Distribution) and DDC (Direct Department Calling) features that were first available in Release 1.

The ACD feature has several major enhancements for R2 V4. These enhancements include:

- Call Vectoring Compatibility

  When the Call Vectoring feature is used in conjunction with ACD, significant flexibility and power are added to ACD's calling-party interface and queue overflow capabilities.

- Sixty ACD splits

  The maximum number of ACD splits is increased from 30 to 60 in R2 V4. With this increased maximum, ACD call answering operations can be subdivided into more functional categories. As an example, the System 85 limit of 1024 ACD agents in 60 splits can be reached with the following configuration:

  - 4 splits of 32 agents
  - 56 splits of 16 agents.

- Queue-Status Display

  This function provides ACD agents (equipped with display voice terminals) with periodic updates of the number of calls in the split's queue and the amount of time the oldest queued call has waited.

- Multiple Call Handling

  Primarily for Message Center agents, this function allows an ACD agent to place a call on hold (using the HOLD button) and remain ‘‘available’’ to receive ACD calls.

- Malicious Call Trace Compatibility

  Using the Malicious Call Trace feature, an ACD agent can quickly and easily activate a trace that can identify the calling party of a malicious call.

- Improved REPEAT Button Operation

  Using an R2 V4 ACD, an agent can press the REPEAT button to repeat any origin announcement that the agent just heard: VDN-, city-, or queue-of-origin. Using a call distributor prior to R2 V4, the REPEAT button only repeats a city-of-origin announcement.

- Improved Agent Call Pegging for CMS

  Beginning with Issue 1.3 of R2 V3 and Issue 1.1 of R2 V4, the switch will peg agent calling activity more accurately. Before pegging a call placed by an ACD agent, the switch will review the dialed digits and, for internal calls, monitor the call’s progress. In this way, the CMS will not be notified when feature access codes, many invalid numbers, and many calls resulting in busy tone or reorder tone are dialed by ACD agents.

  In the earlier issues of the R2 V3 and R2 V4 software, the switch notifies the CMS whenever an agent goes off-hook on an idle appearance. This method of pegging the calling activity of ACD agents can distort the corresponding CMS statistics by reporting agent state changes, feature requests, and many invalid or misdialed numbers as completed calls.

  NOTE: Refer to Appendix B for a tabular comparison of the various call distributors provided in System 85, Release 2.

General Usage

A published number is linked to an ACD split by associating the published number with the extension number of the first terminal in the split. The controlling or primary terminal for the split (the split supervisor’s terminal) is the first terminal in the split’s list.

The switch directs incoming calls for a published number to the split’s queue. Three methods of call distribution are available (assigned on a per-split basis) to extend the call from the queue to an idle agent: linear hunting, circular hunting, and MIA (most idle agent) distribution.

Linear Hunting

Linear hunting (also called Direct Hunting) always starts with the first agent (split supervisor) and hunts toward the last member. Linear hunting is used for applications where a priority series of answering positions is desired.

NOTE: This type of hunting provides the call-distribution algorithm that was formerly provided by the DDC (Direct Department Calling) feature.

Circular Hunting

Circular hunting starts where the hunting process left off during the previous scan and continues through the list of agents. After checking the final member of the list, circular hunting again returns to the first member of the list and continues in a circular fashion. Circular hunting is useful for applications, such as order taking or Message Center, where a more evenly balanced call distribution is necessary.

> **NOTE:** This type of hunting provides the call-distribution algorithm that was formerly provided by the UCD (Uniform Call Distribution) feature.

MIA (Most Idle Agent) Distribution

The MIA type of distribution extends ACD calls to the available agent for whom the longest period of time has elapsed since the agent has finished an ACD call. Agents who are in the Staffed mode of operation and are not handling an ACD call are placed in an agent queue. Using this method, the first available agent from the agent queue would receive the call from the head of the split's queue containing incoming ACD calls. The MIA distribution approach, like circular hunting, is used for applications where an evenly balanced call distribution is necessary. This approach to call distribution is especially useful when there is substantial variation in the duration of ACD calls.

> **NOTE:** The MIA call-distribution algorithm provides what is commonly known in the trade as ''true'' ACD.

Agents are marked as ''unavailable'' with regard to the agent queue when they are in the Aux-Work mode of operation, engaged in after-call work, or active on a personal call. In this way, agents, although unavailable for another ACD call, are moved ahead in the agent queue. If an unavailable agent moves to the head of queue, the agent is bypassed for distribution of ACD calls until becoming available. When available, the next ACD call quickly routes to that agent.

For some ACD applications, outgoing calling is an integral part of the agents' duties. For other applications, an agent rarely makes an outgoing call. The MIA method of distribution allows outgoing calls either to be considered as work related (agent is removed from the agent queue) or personal (agent remains in queue and is marked as unavailable). This choice is made on a per-split basis, allowing the choice to be based on the primary application of each split.

Each terminal (including the split supervisor's terminal) in an ACD split can receive calls either as a split member or as an individual terminal. For internal calls, unique ACD split extension numbers, called associated numbers, identify the split. For incoming calls, the ACD split is associated with incoming trunks. For automatic-in type trunks, the call routes to the assigned ACD split. For dial-repeating type trunks, the call routes to the split dialed. This is similar to the way DID calls complete to individual terminals (including individual ACD split members).

One of the associated numbers and any number of the incoming trunk groups may receive a priority designation. Priority calls are placed at the head of the queue or behind priority calls which are already in queue. A nonpriority call enters the queue behind all other calls.

An example of priority queuing is shown in Figure 17-1. Within this figure, the priority calls are *lettered*, and the nonpriority calls are *numbered*. One associated extension number (the maximum) and two trunk groups are delivering incoming calls to the end of the priority portion of the queue. Meanwhile, two associated extension numbers and two trunk groups are delivering incoming calls to the end of the nonpriority portion of the queue. Each call is distributed from the head of queue (currently, Call A) to an available agent in Split 29.

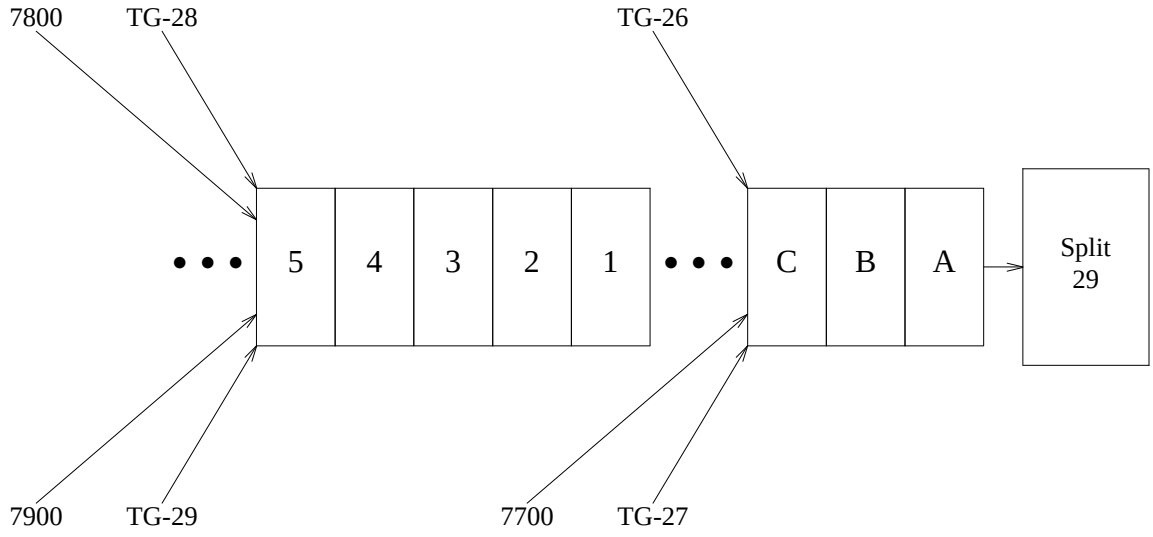

Figure 17-1. ACD Priority Queuing

Methods of Routing Incoming ACD Calls

The two ways to route incoming ACD calls to the System 85 switch include:

- Dial-repeating type routing

  Using this method, an associated extension number's digits are passed through the serving switch (usually, the serving Central Office) and to the local System 85 in a similar manner to the way that DID calls are routed. As the associated extension number's digits are analyzed by the System 85's call-processing software, the dialed number is recognized as a number that terminates to a specific split's queue. In turn, the call-processing software gives control of the incoming call to ACD processing.

- Automatic-in type routing

  Using this method, an ACD call is recognized by the serving switch (usually, the serving Central Office) as a call that is routed to the local System 85 over a specific trunk group. In turn, the local System 85 accepts the call from over the trunk group, and recognizes the call as assigned to terminate to a specific split's queue. This method of routing resembles ''non-DID routing'' to the attendant queue. In fact, ''attendant completing'' trunk groups are often used for automatic-in type routing of ACD calls. Automatic-in type trunk groups are assigned as ''attendant-completing in'' or ''automatic in'' in Procedure 100, Word 1 and then assigned to terminate to an ACD split in Procedure 115.

Outgoing Calling by ACD Agents

This ACD feature description primarily focuses on ACD from the perspective of incoming calls. For example, ACD can distribute high volumes of ‘‘incoming calls’’ to agents in a fair and cost-effective manner. The ACD feature can also provide recorded announcements and/or music for a desirable ‘‘calling party’’ interface. Moreover, several management tools are available (most notably, CMS and service observing) to hold costs in line and to ensure effective agent performance.

However, especially when ACD is applied to address the needs of a telemarketing organization, agents can also devote significant effort placing outgoing calls (e.g., to solicit sales). In this environment, an ACD manager is also concerned with the costs of outgoing calling. Although the ACD feature does not directly address these concerns, a number of coresident features on System 85 do.

As previously mentioned, ACD agents in addition to receiving calls distributed from a split’s queue, are able to place and receive calls in the usual manner. Given this ability, ACD agents have the same access as other System 85 users to the least-cost-routing capabilities of the ARS (Automatic Route Selection) and AAR (Automatic Alternate Routing) and IXC (Interexchange Carrier Access) features. Indeed, the switch administrator can control the costs of ACD outgoing calling with the *same* methods that costs are generally addressed on System 85.

CMS Management of ACD

A CMS (Call Management System) is now available for System 85. This system, provided using CMS software on a colocated 3B2 or 3B5 (AP 16’s can also be used with R2 V3 switches and *nonvectoring* R2 V4 switches), assists in the management of ACD activity. Detailed reports of ACD activity are generated on a scheduled or on a demand basis, and real-time displays of current agent activity are provided. Also, CMS provides the customer with a convenient method to partially administer the ACD feature on the switch.

The CMS reports can include the following information. This information can be useful as a tool for forecasting future ACD split and agent requirements.

- The amount of time agents spend on calls
- The amount of time it takes for agents to answer calls
- The number of abandoned calls
- The amount of time agents are available between phone calls
- The number and amount of time spent on outgoing calls by agents.

To help conceptualize this complex feature, a sample ACD/CMS system is depicted in Figure 17-2. Within this figure, the contents of the dashed box describe the ACD functions provided by the System 85 switch.

For a thorough description of CMS using the 3B2 or the 3B5, refer to the CMS Administration Guide (585-215-501).

For a thorough description of CMS using the AP 16, refer to the CMS Administration Guide (585-201-520).

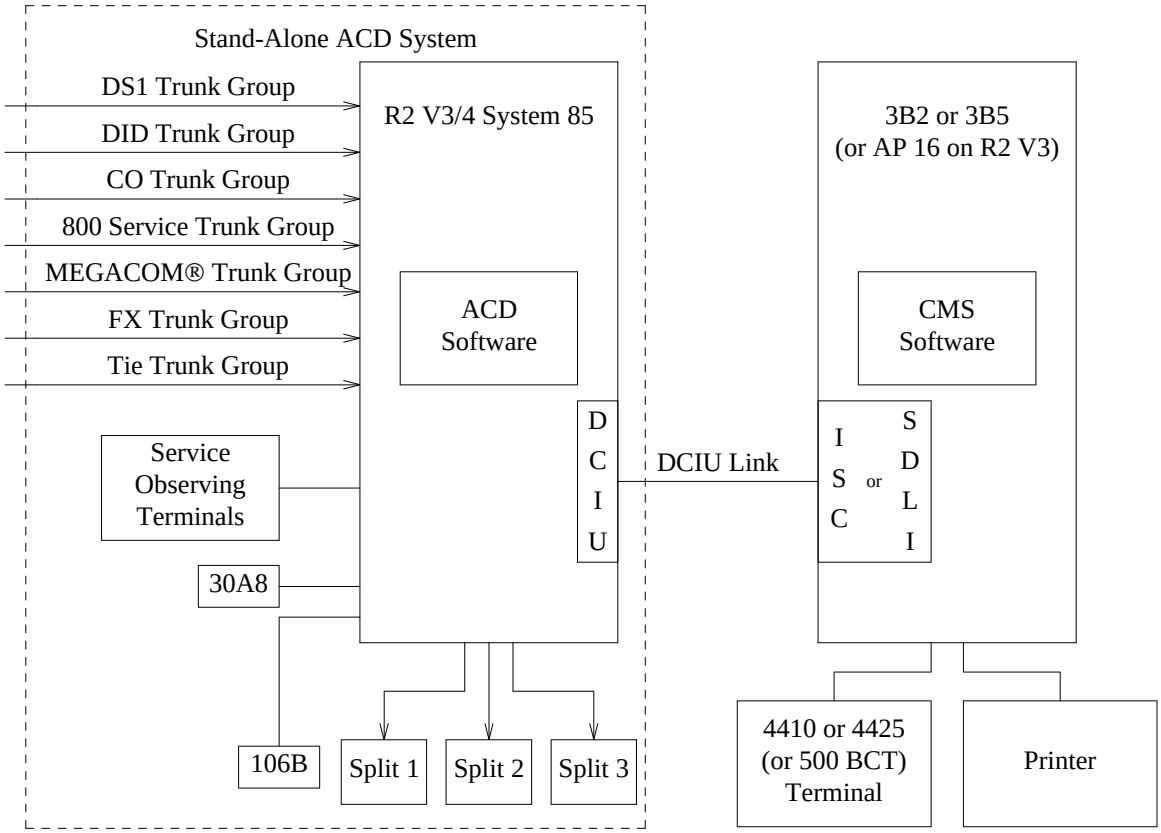

Figure 17-2. Simplified Pictorial of an ACD/CMS System

Lamp Monitoring of ACD Agents

Display units (106B) can be provided instead of, or in addition to, an AP with CMS software to show the current activity of 20 ACD agents. For each agent, the unit displays one of the following agent states.

- The agent is available to handle an ACD call. [First lamp (top)]
- The agent is handling an ACD call. [Second lamp]
- The agent is engaged in after call work. [Third lamp]
- The agent is in the Aux-Work mode. [Fourth lamp]
- The agent is not engaged in work related activity (e.g., personal call). [Fifth lamp (bottom)]

  NOTE: This state includes any incoming- or outgoing-calling activity (from the perspective of the agent's voice terminal) that is considered non-ACD related.

- The agent's position is in the Unstaffed mode. [All lamps off]

Agent State Diagram

Figure 17-3 is a state diagram describing the interrelation of these six agent states when the MIA call-distribution algorithm is used. The diagram shows the transitions of an ACD agent from one state to another during routine calling operations. As an example, an agent in the After Call Work state who presses the MANUAL-IN button is returned to the end (bottom) of the agent queue as an available agent.

Agent State Diagram (Charlie Brady)

NOTES:

Δ If not already in the agent queue.

* Administration is available for outgoing call treatment. The agent can either keep the same position in the agent queue or return to the end (bottom) of the agent queue when the call finishes.

\+ Agent returns to the previous state after non-ACD call is finished (if the agent does not manually change states using a button or an access code).

Figure 17-3. Agent State Diagram for MIA Distribution

Answer Supervision

Answer supervision is a signal sent by System 85 to the serving CO (Central Office) indicating that an incoming call has been answered. Upon receiving this signal, the originating CO (generally) begins tracking toll charges for the call (if charges apply). For ACD calls to System 85 which enter a queue before being answered, answer supervision must be returned (at the latest) either just before an agent actually answers or just before the first recorded announcement (if provided), whichever comes first. This is the *preferred operation*, and is provided automatically by R2 V4 System 85.

For R2 V3, the preferred operation is provided on a system-wide basis when Field 12 of Procedure 275, Word 4 is set to ''1.'' When this field is left with the default entry ''0,'' System 85 returns answer supervision for ACD calls at the time each call first enters queue. Since billing is for a longer period of time, this operation would result in higher toll charges for the customer (when 800 Service is used) and/or for each calling party.

Answer Supervision and Abandon Call Search

As discussed, the switch returns answer supervision to the serving CO either at the time an incoming call first enters the split's queue or just prior to connecting the call to the first recorded announcement. However, after answer supervision has been returned, ''ghost calls'' can occur if the calling party abandons the call.

A ghost call occurs whenever an agent answers a call *after* the calling party hangs up, but *before* the CO returns the disconnect signal to the System 85. Primarily depending on the type of CO, the delay in returning disconnect is on the order of 2 to 25 seconds. If a ghost call were to occur, an ineffective call would be distributed to an agent. Also, as if the agent had received an actual ACD call, the agent would be inappropriately credited with an ACD call and bypassed for distribution of subsequent ACD calls.

To minimize this problem, abandon call search can be assigned to the switch (Procedure 275, Word 4). When abandon call search is assigned, the switch checks incoming CO, 800 Service, and FX trunks just before ringing an idle ACD agent. If the trunk is found to be on-hook at the CO, the switch releases the trunk. If the trunk is active, the switch distributes the call to the idle agent.

> **NOTE:** It is recommended, whenever processor occupancy allows, that abandon call search be assigned to the switch.

Split Supervision

Supervision of an ACD split is primarily provided by a split supervisor. The split supervisor, Member 0 of the split, may be an experienced agent who performs agent training duties, serves as a consultant to the group of agents, and regulates the split's operation. In addition to the usual agent capabilities, the split supervisor is able to:

- Observe agent performance using agent override or service observing.
- Add or remove agents to/from the split.
- Verify the split's recorded announcement.
- Activate or deactivate Call Forwarding for the split.
- Activate or deactivate Overload Balancing for the split.

- Turn off the reload warning lamp after a tape reload by the switch.

Also, one local attendant can be designated as the system supervisor. The supervisor cannot perform agent duties from this attendant console, but may perform the following tasks:

- Activate or deactivate Call Forwarding for a split
- Turn off the reload warning lamp after a tape reload by the switch.

Intraflow and Interflow

Intraflow, redirection of ACD calls to a local destination, and interflow, redirection of ACD calls to a distant network node, are available to increase call-distribution flexibility. Call Forwarding is *primarily used* as the software mechanism for intraflow (local redirection), while overload balancing is *usually chosen* as the mechanism for interflow (distant redirection). *Both intraflow* and *interflow* can operate in two ways: *threshold* redirection and *unconditional* redirection (redirection of *all* calls). Threshold redirection diverts ACD calls during a heavy call load. Unconditional redirection diverts all calls when an ACD split is inactive.

> **NOTE:** When interflowed ACD calls use the AAR or ARS feature to route these calls outside the local switch, the FRL of the split's supervisor is used to determine whether these calls can use the available network facilities.

''Chaining'' of Destinations for Intraflow—All

When Intraflow—All is activated, the split can have as many as three local destinations (e.g., an extension, the attendant group, or another ACD split) for unconditional redirection of ACD calls. These destinations are arranged in a priority scheme by order of activation. If the first destination is unavailable, the switch checks the second and third destinations (while the call *remains* in the first split's queue). Of these three destinations, only the last destination should either be another ACD split or the attendant group (i.e, be accessed by a queue).

> **NOTE:** When a destination before the last destination has a queue, the call unconditionally enters the queue, and subsequent destinations are never checked.

If an unconditionally intraflowed call enters an ACD queue, and this queue *also* has Intraflow—All active, the call will recursively intraflow again. This time, the call intraflows to one of the new split's destinations.

If an unconditionally intraflowed call enters an ACD queue, and this queue has Intraflow—*Threshold* active, the call will not intraflow again. Instead, this call is marked as ''Intraflow—Threshold Not Allowed,'' and must be answered by an agent in this split.

No ''Chaining'' of Destinations for Intraflow—Threshold

There can also be three local destinations (e.g., an extension, the attendant group, or another ACD split) for threshold redirection of ACD calls. These destinations are arranged in a priority scheme by order of activation. If the first destination is unavailable, the switch checks the second and third destinations (while the ACD call *remains* in the first split's queue). All three of these destinations can be ACD splits (i.e., accessed by a queue). When the inflow parameter at a receiving split is met, the switch executes the intraflow operation and marks the call as ''Intraflow—Threshold Not Allowed.'' These calls are not allowed to intraflow again. ACD calls are not allowed to conditionally intraflow throughout the switch in a recursive manner.

NOTE: Intraflow—Threshold operates to attenuate heavy call loads while the split has *active* ACD agents to answer the calls. So, when the parameters for the first intraflow operation are carefully chosen, the need to redirect the same ACD call again is minimal.

If a conditionally intraflowed call enters an ACD queue, and this queue has Intraflow—*All* active, the call will recursively intraflow again. This time, the call intraflows to one of the new split's destinations.

Parameters for Intraflow Threshold Redirection

Threshold (overflow) redirection operates when the number of calls that are waiting in a queue is greater than or equal to the preset overflow level. A split's overflow level can be set to any value between 1 and 99. However, if the destination for redirection is an ACD split, the call to be diverted will only be accepted into queue if the number of calls in queue is less than or equal to the destination split's inflow level, *and* there is *at least one staffed agent* in the destination split. A split's inflow level can be set to any value between 0 and 98. When overflow redirection does occur, the switch diverts the first call in queue.

NOTE: When an inflow level is set to ''0,'' a call will not be accepted unless there is *at least one available agent* in the destination split.

For example, split A has an overflow level of 21 and split B has an inflow level of 5. Presently, split A is quite busy. Every agent in split A is busy on a call and the queue contains 20 waiting calls. The next incoming call to split A will attempt to enter split A's queue. If split B has five or less calls in queue, the incoming call will enter split A's queue and the first call in split A's queue will redirect to split B. If split B has six or more calls in queue, redirection can occur to an alternate destination (if assigned), but not to split B. If every destination for redirection of ACD calls is busy, the incoming call enters the original queue as the 21st call.

NOTE: Assigning the overflow level for split A to ''1'' would have the effect of emptying the queue. This operation for diverting ACD calls would be applied to the *first call* attempting to enter the queue.

NOTE: For R2 V4 System 85, the Call Vectoring feature can

Split Membership

The split supervisor is able to regulate membership in the supervisor's own split by adding and removing agents to/from the split. Furthermore, agents can be transferred from one split to another, provided the two split supervisors coordinate the transfer. Before adding or removing an agent to/from a split, the agent must be placed in the unstaffed mode.

Agent Override

The agent override function allows a local terminal user to enter an agent's call. Agent override is useful as a tool to observe the call handling performance of the agents. However, the agent must be actively engaged in a call. Agent override is activated by a dial access code. An optional warning tone is available and is provided by using a different dial access code.

Using either agent override access code, an audible 2-way connection is always provided by the switch.

Service Observing

The service observing function allows a local multiappearance terminal user to monitor the work performance of an agent (who must also be equipped with a multiappearance terminal) for extended periods of time. The observer (usually, the split supervisor or a voice terminal user outside the split) is able to listen closely to the way an agent handles successive ACD calls. The SERVICE OBSERVE button is used to activate the service observing function.

Service observing can be used for training purposes. As a training device for inexperienced agents, service observing is useful in two ways. First, the new agent can be allowed to use a voice terminal equipped with a SERVICE OBSERVE button. In this way, the new agent can unobtrusively observe the way an experienced agent handles ACD calls and learn by example. Second, the split supervisor can monitor the performance of the developing agent. This enables the split supervisor to spot mistakes and refine the agent's call handling abilities.

Warning Tone

An optional warning tone is available (assigned on a per-system basis) to alert the agent to the presence of an observer in the connection. If this option is chosen, the switch returns a 2-second burst of 440-hertz tone as the observer enters an established call and repeats the tone (for 0.5 seconds) at 15-second intervals for the duration of the observer's presence. When an observer associates with an agent's line between calls, the switch returns the first warning tone 5 seconds after the beginning of the next call.

Muting (Silent Observing) and 2-Way Observing

On a switch with the optional warning tone *disabled*, observers begin observation with ''muting'' active. In this way, when desired, silent observation can proceed normally. However, after observation has started, the observer can establish an audible 2-way connection and participate in an agent's call.

The muting function is deactivated (i.e., a 2-way connection is established) by pressing the SERVICE OBSERVE button during observation. Another press of the SERVICE OBSERVE button would restore muting for the connection.

For a switch with the warning tone *enabled*, an audible 2-way connection is always active during observation.

Nonvectoring ACD From the Calling Party's Perspective

Recorded Announcements for Caller

When there is a delay in answering the call, either one or two optional recorded announcements inform the calling party of the delay before the call completes. The first recorded announcement can provide a unique message for each ACD split. The second recorded announcement is system-wide and assures the caller that the call has not failed.

The timing interval preceding the first recorded announcement is set from 2 to 30 seconds (by 2-second increments). The calling party is always connected to the beginning of an announcement. Therefore, the timing between placing the call in queue and actually hearing the announcement can be as much as the timing interval chosen (from 2 to 30 seconds) plus the duration of the announcement.

The second recorded announcement is also available for each split that uses a first recorded announcement. The timing interval between the end of the first announcement and the beginning of the second announcement is set from 2 to 30 seconds (by 2-second increments). The calling party is always connected to the beginning of the announcement. Therefore, the actual timing between announcements can be as much as the timing interval chosen (from 2 to 30 seconds) plus the duration of the second announcement.

If an agent becomes available at any time before, during, or after a recorded announcement, the switch removes the announcement (if necessary) and sets the call-distribution process in motion.

Music-on-Hold

Music-on-Hold is also optional and may be provided to callers who are waiting in queue. A music signal provides continuous audible feedback indicating that the connection is still in effect.

When Music-on-Hold is provided for ACD queues, music is also provided (on a per-switch basis) for the Hold, Conference—Three Party, and Transfer features.

Tabular Representation of Available Choices

The following table shows the calling party interfaces provided by ACD. Generally, each ACD split can use a different option. However, the Music-on-Hold option is assigned on a system-wide basis. If this option is assigned, incoming calls to every split receive music. When the option is not assigned, incoming calls to every split do not receive music.

A split cannot be provided with the system-wide second recorded announcement unless the split is also provided with a first recorded announcement. An easy way to circumvent this problem, if desired, is to provide a first recorded announcement with similar wording to the system-wide announcement.

ACD From the Agent's Perspective

Zip Tone

Agents in an ACD split receive zip tone before connecting to an ACD call. A single burst of zip tone designates a call dialed directly to the agent's split (one burst of zip tone is only provided for agents with automatic answering). Two bursts of zip tone designate a call redirected from a split within the local switch. Three bursts of zip tone designate a call which routed to the split via a trunk group in the network (e.g., by overload balancing).

City-of-Origin and Queue-of-Origin Announcements

After hearing zip tone, the agent may receive either a city-of-origin or queue-of-origin announcement. The calling party cannot hear either the zip tones or the announcement.

Table 17-1. Available Choices for Customer Interface

OPTION	CALLING PARTY HEARS*
No Announcement	Ringback
First Recorded Announcement (No music provided)	Ringback, Announcement, Silence
First and Second Recorded Announcements (No music provided)	Ringback, First Announcement, Silence, Second Announcement, Silence
First Recorded Announcement (Music provided)	Ringback, Announcement, Music
First and Second Recorded Announcement (Music provided)	Ringback, First Announcement, Music, Second Announcement, Music

* When an agent becomes available for the call, the switch will immediately discontinue ringback, either announcement, or the choice of silence or music in order to distribute the call.

NOTE: For R2 V4 System 85, the Call Vectoring feature can provide a more flexible and powerful calling-party interface. Refer to the Call Vectoring feature for a description of these capabilities.

When implemented, the queue-of-origin announcement is heard when intraflow redirects an ACD call to an agent in another local split. When implemented, the city-of-origin announcement is heard when these announcements are assigned to incoming trunk groups. City-of-origin announcements are also heard when interflow redirects an ACD call to an agent at a distant node of the DCS or ETN network.

The city-of-origin and queue-of-origin announcements are 1.5 seconds long, run continuously, and are connected to an agent on a barge-in basis. In R2 V4, pressing an optional REPEAT button repeats the *VDN-, city-, or queue-of-origin* announcement. (In R2 V3, pressing the optional REPEAT button only repeats the city-of-origin announcement.)

NOTE: When recording ‘‘continuous’’ announcements (VDN-, city-, and queue-of-origin), the message (e.g., ‘‘Detroit’’) should be repeated for the *full duration* of the announcement set’s announcement. As an example, the 13A announcement set provides 24-second announcements. ‘‘Detroit’’ should be repeated (i.e., ‘‘Detroit, Detroit, Detroit, ...’’) for the entire 24 seconds. In this way, agents will more readily hear the announcement, and the number of ‘‘reset intervals’’ between machine playbacks is reduced.

Display Capabilities for Agents

The functionality provided by the Display—Voice Terminal feature can be applied to uses for ACD agents. These visual capabilities can replace and/or supplement the traditional city-of-origin and queue-of-origin announcements.

> **NOTE:** The 7406D, 7407D, or 7405D (with D401 display module) voice terminal would provide the necessary display functionality for an ACD agent.

The display capabilities that are available for use by ACD agents are as follows.

- City-of-Origin Display

  When an ACD call forwards to a distant ACD split, the answering agent receives a visual display identifying the city of the originally called split. Also, when an ACD call arrives over an incoming trunk group, the answering agent receives a visual display identifying the source. The city-of-origin display is obtained by assigning an appropriate name (e.g., Chicago) to the incoming trunk group at the distant node.

- Queue-of-Origin Display

  When an ACD call forwards to a local ACD split, the answering agent receives a visual display identifying the originally called split. The queue-of-origin display is obtained by assigning an appropriate name (e.g., Sales Dept.) to the queue directory number or the split supervisor's individual extension number for the originally called split.

- Calling Number Display

  When a call from within the DCS network is directed to an agent's individual extension number, the agent receives a visual display identifying the calling party or department. This is useful when an agent needs to correspond with other individuals or departments within the company.

- Dialed Number Display

  This function displays the dialed number when an agent places a call. This display helps to ensure accuracy in dialing.

- Elapsed Time Function

  This function displays the amount of time elapsing since the ELAPSED TIME button was pressed. The Elapsed Time function operates during calls and between calls. Therefore, an agent can use this clock as a tool for pacing the agent's handling of calls and after call work.

- Calculator Function on 7407D

  Calculator functionality is provided with the 7407D voice terminal that allows an agent to conveniently perform any necessary arithmetic computations. The calculator on the 7407D can operate during calls and between calls. Therefore, an agent can use the calculator both as a tool for quoting prices to customers and as an aid for after call work.

DNIS (Dialed Number Identification Service) Without Call Vectoring

In the initial availability of DNIS, ACD agents equipped with a display voice terminal (e.g., 7405D, 7406D, or 7407D) receive visual displays that specify the dialed number for calls terminating to the agent's voice terminal. The Call Forwarding—Follow Me feature or the Call Coverage feature (using the ''All'' criterion) provides the redirection needed to deliver this functionality.

In traditional ACD arrangements, groups of agents are organized into ''splits'' (functional groups of answering positions). Under this approach, an agent is trained to answer calls for one specific purpose in an efficient and professional manner. However, ACD managers are recognizing the need to relax this concept of limiting each split to one call-answering task.

The alternative is to provide splits where each group of agents is proficient with several types of calls. The desired gain is to provide adequate service for the several call types with fewer agents and with less administrative intervention by the ACD manager. Using this approach, the changing staffing needs of the several call types are averaged in time, and enough agents are staffed to provide adequate service for the prevailing average load. Where 5 agents might be needed in each of 3 smaller splits (15-agent total) to handle 3 types of calls, only 11 or 12 agents might be needed in the single (more general) split.

This idea of averaging the call-handling load is sound for certain applications, but the goal of improved agent efficiency is more readily achieved with the DNIS capability. With DNIS, each answering agent knows the purpose of each incoming call as the call terminates to that agent's voice terminal. As a result, the natural efficiencies of the single split/single call type arrangement are not compromised. With the calling number display provided by DNIS, agents are aware of each call's purpose, and can answer each incoming call with the appropriate greeting. Agents need not invest time merely to determine the purpose of calls.

The following table shows sample displays that an ACD agent might receive.

Table 17-2. DNIS Display Information

TYPE OF CALL	DISPLAY
Inside call	a=R JONES to CLAIMS f
Outside call	a=OUTSIDE CALL to SALES f
ISDN call	a=212-281-7733 to SERVICE f

within a split. These extensions are, in turn, forwarded to the split's associated extension number. A calling party dials the number of the dummy extension, and the call is forwarded to the split's queue.

> **NOTE:** Since Call Forwarding can be activated for the extension from an attendant console, an actual voice terminal and line circuit are not required to complete the configuration. After these Call Forwarding relationships are established from the console, a ''Run Tape'' operation should be performed (using the MAAP or SMT) to make these relationships permanent.

Call Coverage (All) Configuration

within a split. Also, these extensions are assigned to the appropriate coverage group in Procedure 000, Word 2. These extensions are, in turn, redirected using Cover All (Procedure 011, Word 1) to the split's associated extension number. A calling party dials the number of a dummy extension, and the call is redirected to the split's queue.

NOTE: Since the Call Coverage configuration is an administered relationship, an actual voice terminal and line circuit are not required to complete the configuration. However, as a normal aspect of the Call Coverage feature, internal callers to the ACD split will receive coverage tone (followed by the system-wide caller response interval) before the call enters the split's queue.

NOTE: When Call Vectoring is assigned to the System 85, DNIS is administered differently. Refer to the Call Vectoring feature for a description of this DNIS configuration.

Queue-Status Display

A queue-status display function is available with the ACD feature to provide agents (equipped with display voice terminals) with information about the status of the split's queue. This function is assigned to an ACD agent's class of service in Procedure 010, Word 1. When assigned, two queue-status items are automatically provided to the answering agent each time an ACD call terminates to an agent's voice terminal. These displays are also manually updated each time an agent presses the NORMAL MODE button.

- The number of calls in the split's queue

  This value (from 1 to 999*) is the current number of queued calls (at the time the ACD call begins to ring the agent). This value is right-justified in its 3-character field on the 40-character display, and when necessary, leading blanks are inserted.

- The duration of time the oldest queued call has waited.

  This value (from 001 to 999†) is the current number of seconds that the oldest queued call has waited (at the time the ACD call begins to ring the agent). This value is right-justified in its 3-character field on the 40-character display, and when necessary, leading zeros are inserted (to distinguish this field from the ''number of queued calls'' field).

With this information, an ACD agent would know at the beginning of every call whether: to answer the call in a casual and courteous manner, to be especially efficient with the call, or to record the calling party's name and number and return the call later.

Figure 17-C shows sample displays that ACD with queue-status display assigned might provide to an agent.

---

* If the number of queued calls exceeds 999, this portion of the display will show ''***.''

† If the oldest call has waited more than 999 seconds, this portion of the display will show ''***.''

Table 17-3. ACD Queue-Status Display Information

TYPE OF CALL	DISPLAY
Inside call	a=R JONES to CLAIMS 5 009
Outside call	a=OUTSIDE CALL to SALES 25 064
ISDN call	a=212-281-7733 to SERVICE 17 045

Multiple Call Handling

The multiple call handling function allows an ACD agent to place a call on hold (using the HOLD button) and remain ‘‘available’’ to receive ACD calls. In software packages prior to Release 2, Version 4, an agent was not considered available to receive an ACD call unless every appearance of the agent’s individual extension was idle. Further, ACD calls were only allowed to terminate to the *first appearance* of an agent’s voice terminal, and automatic answering could only be assigned to the first appearance.

When multiple call handling is assigned to a split, these constraints are relaxed. ACD calls can now terminate to other appearances of an agent’s extension, and automatic answering can be assigned to as many ‘‘terminating/originating’’ appearances [i.e., 1, 2, 3, ... n (where n is less than or equal to 12*)] as desired.

Multiple call handling (in conjunction with Principal Busy Indications) is primarily useful for Message Center agents. Commonly, these agents receive redirected calls from busy principals, and the calling party would like to hold until the principal is finished with his/her call. Multiple call handling allows these Message Center agents to handle additional ACD calls while these calling parties wait. Meanwhile, Principal Busy Indications provide these Message Center agents with the current busy/idle status of the principals’ extensions.

Multiple call handling can also be used by traditional ACD agents to help ‘‘clear’’ the split’s queue during peak periods of incoming calling. For some ACD applications, allowing ACD agents to clear the queue and to place these calls on hold provides what can be beneficial human contact with the calling parties. Once the queue is cleared, the split’s agents can serve the held ACD calls one at a time.

> **NOTE:** Music-on-Hold is recommended to supplement multiple call handling as a way of clearing queues. Otherwise, the benefits of the initial human contact can be diminished during an extended period of silence for the held parties.
>
> **NOTE:** Since the agents who are clearing a queue are actually answering these queued calls, answer supervision (if not returned previously) is returned to the serving switch at the time an agent removes each of these calls from queue.

* The full software limit of 12 appearances can be reached using a 7405D voice terminal and a C401A coverage module. Otherwise, the limiting factor becomes the amount of 2-lamp appearance buttons provided on the specific voice terminal used.

Refer to the **User Operations** for a brief description of ACD agent operation using Multiple Call Handling.

Agent Convenience

Multibutton voice terminals are recommended for use with ACD. The feature buttons provide convenience and flexibility for the agents. An agent's mode of operation can be altered without interruption to callers, and the agent is freed from remembering numerous dial access codes. Furthermore, the status lamps on the terminal provide a visual reminder of the current agent mode.

> **NOTE:** Refer to Table 17-D for a cross-reference of applicable feature buttons and dial access encodes.

Automatic answering is available and recommended to provide hands-free operation for the ACD agents. With automatic answering assigned to a terminal, incoming calls automatically connect to the terminal without ringing. The call automatically disconnects from the agent's terminal when the calling party disconnects. In the AUTO-IN mode, the agent is available for the next call immediately after disconnecting from the previous call.

> **NOTE:** When automatic answering is used, it is very preferable to provide headsets for the agents. However, automatic answering can be used with voice terminal handsets.
>
> Automatic answering combined with handset usage may result in unexpected and somewhat inconvenient agent operation. The primary effect is that going on-hook (i.e., hanging up the handset) places an agent's position in the unstaffed mode, and the agent must manually staff the position to receive another ACD call. So, in order for handset usage to be effective, an agent must wait to answer calls with the handset *continuously held* to the agent's ear. The secondary effect is that on straight line sets (where handset operation is usually tried) there is no RELEASE button available. So, agents must wait (approximately 6 seconds) for the automatic disconnect process to finish before returning to an available state. (If the agent chooses to go on-hook instead of waiting, the voice terminal returns to the unstaffed mode.)

The buttons that are available for use by ACD agents are as follows.

- APPEARANCE BUTTONS (usually, one or two)

  Agents use these buttons to place and answer calls. Two status lamps (red and green) are adjacent to each appearance button. The red lamp lights when an agent presses an appearance button. The green lamp flashes to alert an agent to an incoming call. Since incoming ACD calls always terminate to the first appearance, only one appearance is necessary to perform basic agent duties. However, two appearances provide an expanded functionality for agents. With the second appearance, an agent can more readily receive calls to the agent's individual extension number, transfer calls (e.g., to another agent), and place calls. A third appearance button can be provided when an agent has a special need to place calls.

  To provide an appropriate functionality for the agents, the recommended assignment of the appearance buttons is as follows.

1. Terminating and originating capabilities

- ASSIST

  The ASSIST button is an Abbreviated Dialing button with the split supervisor's individual extension as the stored number. An agent uses this button to request help from the split supervisor. Pressing this button places a call from the agent to the split supervisor.

- AUDIO TROUBLE (Stroke Count Button, Code 0)

  The AUDIO TROUBLE button is pressed by an agent whenever there is poor transmission quality on a call (e.g., too much noise or not enough amplification). When this button is pressed, the switch delivers information to the 3B2, 3B5, or AP 16 CMS to assist in the maintenance of defective facilities. This information identifies the agent's line, the trunk facility being used, and the time of day the difficulty occurred.

- AUTO-IN

  This button is pressed when an agent wants to receive calls in the automatic mode. In the automatic mode, an agent is available to receive an ACD call immediately after disconnecting from the previous call. Activating this mode (pressing the AUTO-IN button) automatically releases all other modes. (To enter the Auto-In mode, the agent must first be in the STAFFED mode.)

- AUX-WORK

  This button allows an agent to discontinue receiving ACD calls. Often, this mode is active during breaks from the work schedule (e.g., lunch, coffee breaks, etc.). Pressing the AUX-WORK button automatically releases all other modes.

- EMERGNCY

  When an agent receives a malicious call, this button allows an agent to quickly activate a trace. An attendant, acting as the ''controlling attendant,'' actually performs the trace.

- HOLD

  This button allows an agent to place an active call on hold. When Multiple Call Handling *is not assigned* to the split and a call is placed on hold, the ACD feature will not distribute new calls to that agent until the held call is released or transferred. When Multiple Call Handling *is assigned* to the split and a call is placed on hold, the ACD feature can distribute new calls to that agent.

- LWC

  This button activates the Leave Word Calling feature. The ACD agents can quickly and easily leave standard messages with the Leave Word Calling feature. Pressing the LWC button leaves a ''return call'' message for a called party within the DCS network.

- LOGIN

  The LOGIN button is an Abbreviated Dialing button with the Agent Log In access code as the stored number. When an agent presses this button, the access code to log into CMS is automatically dialed.

- LOGOUT

  The LOGOUT button is an Abbreviated Dialing button with the Agent Log Out access code as the stored number. When an agent presses this button, the access code to log out of CMS is automatically dialed.

- MANUAL-IN

  Pressing this button allows an agent to receive a single ACD call. In the Manual-In mode, an agent is considered unavailable to receive another ACD call upon disconnecting from a call. In this way, the agent can finish call-related paper work or do follow-up work before accepting another call. (To enter the Manual-In mode, the agent must first be in the STAFFED mode.)

- RELEASE

  Pressing this button quickly releases any type of call in progress at an answering position.

  > **NOTE:** The RELEASE button should not be assigned to an agent's (or observer's) voice terminal unless automatic answering (Procedure 052, Word 1) *is also assigned* to the voice terminal.

  Well trained agents routinely press the RELEASE button just after the closing salutation to the calling party. If the RELEASE button is not pressed, the duration of the automatic disconnect process is about 6 seconds. However, using the RELEASE button, the disconnect process completes in less than 1/10 of 1 second.

  The time savings accrued from regular use of the RELEASE button provides several advantages:

  Quicker distribution of the next call to an agent in the AUTO-IN mode

  1. More accurate timing of the duration of ACD calls and after-call work for an agent in the MANUAL-IN mode.

- REPEAT

  In R2 V4, pressing this button repeats the optional VDN-, city-, or queue-of-origin announcement (whichever was just heard) for an agent. In R2 V3, pressing this button only repeats the optional city-of-origin announcement for an agent.

- STAFFED

  This button is pressed by an unmeasured agent to notify the switch that the agent's voice terminal is occupied. Another press of the STAFFED button would return the unmeasured agent's position to the unoccupied mode. When the STAFFED button is pressed to staff a voice terminal, the position is placed in the AUX-WORK mode. From the AUX-WORK mode,

pressing the AUTO-IN or the MANUAL-IN button allows an agent to receive an ACD call.

For unmeasured agents using voice terminals equipped with headsets, plugging in the headset automatically places an agent in the occupied mode. Removing the headset automatically places an unmeasured agent in the unoccupied mode.

Measured agents must log into CMS to enter the staffed mode of operation. A measured agent, who is logged in, can log out of CMS either by pressing the STAFFED button or dialing the Agent Log Out access code. Logging out of CMS places a measured agent in the unstaffed mode.

- STROKE COUNT BUTTONS (Codes 1 through 9)

  Stroke count buttons help the CMS system to monitor ACD activity. These buttons are used in conjunction with the CMS system to assist in tabulating events of current interest (concern). A stroke count button should be pressed whenever such an event occurs. When an agent presses a stroke count button, the switch sends a message to the 3B2, 3B5, or AP 16 indicating the button press. Upon receiving the message, the CMS software increments a counter for the agent who pressed the button. Also, the CMS software increments a counter for the entire split of which the agent is a member.

The buttons that are available for use by split supervisors are as follows.

- ADD AGENT

  The ADD AGENT button is an Abbreviated Dialing button with the Member Add access code as the stored number. When the split supervisor

- AGENT OVERRIDE

  The AGENT OVERRIDE button is an Abbreviated Dialing button with an Agent Override access code (with or without warning tone) as the stored number. Using this button, the split supervisor or an observer can enter an agent's call to observe the agent's work performance.

- DELETE AGENT

  The DELETE AGENT button is an Abbreviated Dialing button with the Member Delete access code as the stored number. When the split supervisor presses this button, the Member Delete access code is automatically dialed.

- INTERFLO ALL

  The INTERFLO ALL button is usually an Abbreviated Dialing button with the Overload Balance All access code as the stored number. When the split supervisor presses this button, the access code for unconditional distant redirection of ACD calls is automatically dialed.

  This button can also be a Call Forwarding—Follow Me feature button. The split supervisor can use this button to activate unconditional distant redirection of ACD calls.

- INTERFLO THRESHLD

  The INTERFLO THRESHLD button is an Abbreviated Dialing button with the Overload Overflow access code as the stored number. When the split supervisor presses this button, the access code for overflow distant redirection of ACD calls is automatically dialed.

  NOTE: When Call Vectoring is used in conjunction with ACD, this button is not used.

- INTRAFLO ALL

  The INTRAFLO ALL button can be a Call Forwarding—Follow Me feature button. The split supervisor uses this button to activate unconditional local redirection of ACD calls.

  This button can also be an Abbreviated Dialing button with the Call Forwarding—Follow Me access code as the stored number. When the split supervisor presses this button, the access code for unconditional local redirection of ACD calls is automatically dialed.

  NOTE: When Call Vectoring is used in conjunction with ACD, this button is not used.

- INTRAFLO THRESHOLD

  The INTRAFLO THRESHLD button can be a Call Forwarding—Busy and Don't Answer feature button. The split supervisor uses this button to activate overflow local redirection of ACD calls.

  This button can also be an Abbreviated Dialing button with the Call Forwarding—Busy and Don't Answer access code as the stored number. When the split supervisor presses this button, the access code for overflow local redirection of ACD calls is automatically dialed.

  NOTE: When Call Vectoring is used in conjunction with ACD, this button is not used.

- SERVICE OBSERVE

  This button is needed to activate service observing. Using this button, the split supervisor or an observer can monitor the work performance of an ACD agent.

  For switches with the optional warning tone disabled, pressing the SERVICE OBSERVE button (during observation) also deactivates/restores the muting function.

- VERIFY ANNCT

  The VERIFY ANNCT button is an Abbreviated Dialing button with the Announcement Verify access code as the stored number. When the split supervisor presses this button, the access code to verify the split's first recorded announcement is automatically dialed.

The recommended button layouts for ACD voice terminals are shown in Figures 17-4 through 17-13. These figures are provided to clarify the feature description and to assist in implementing the agents' sets.

Figures 17-4 through 17-7 show the recommended button configurations for convenient handling of ACD calls.

- Figure 17-4 shows the recommended layout for a 16-button voice terminal.
- Figure 17-5 shows the layout for a 40-button voice terminal.
- Figure 17-6 shows the layout for a 7407D Integrated Display Terminal.
- Figure 17-7 shows the layout for a 7406D With Display terminal.

Each of these voice terminals contain two appearance buttons for convenient answering of incoming calls. The blank buttons on the larger sets can be assigned as desired by the customer.

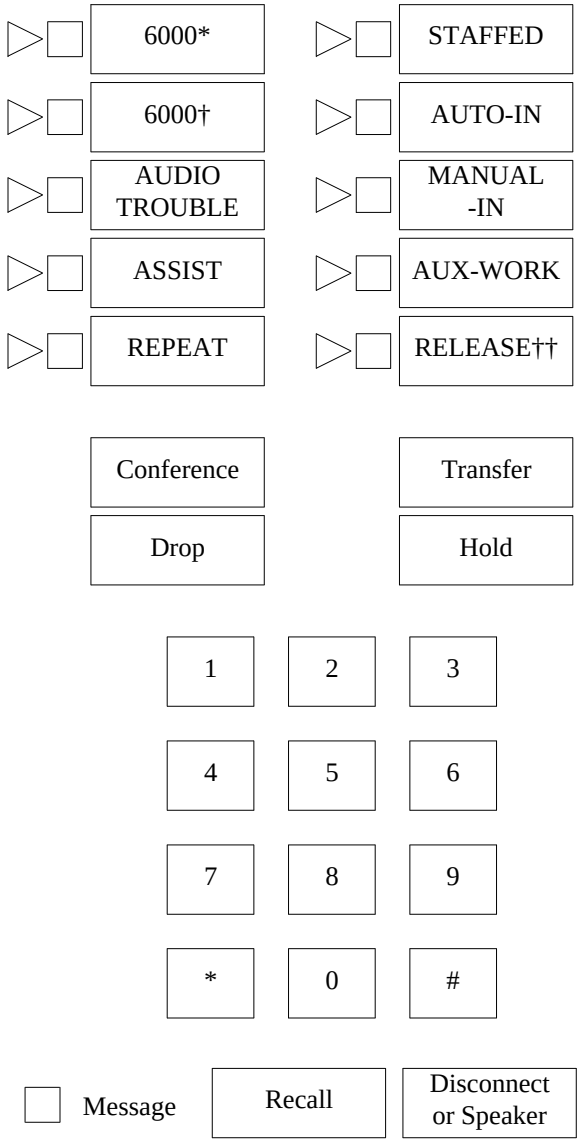

* Terminating and originating capabilities are recommended for the first appearance of an agent's voice terminal.

† Terminating and originating capabilities are recommended for the second appearance of an agent's voice terminal.

†† Whenever the RELEASE button is assigned to a voice terminal, automatic answering should also be assigned to the voice terminal.

Figure 17-4. Button Configuration for ACD Agent (16-Button Set)

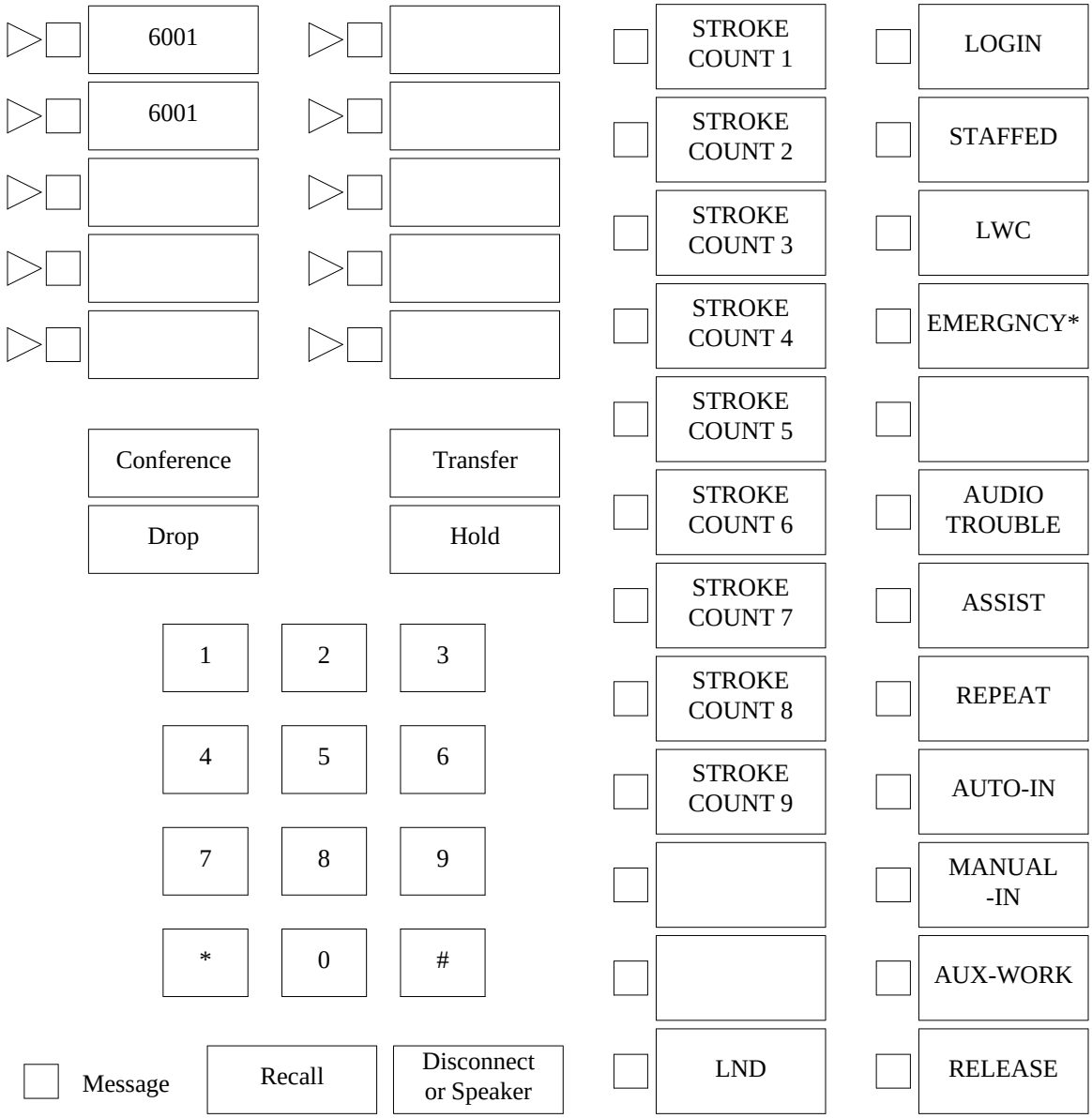

* The EMERGNCY button can only be assigned to agents' terminals on R2 V4 switches.

Figure 17-5. Button Configuration for ACD Agent (40-Button Set)

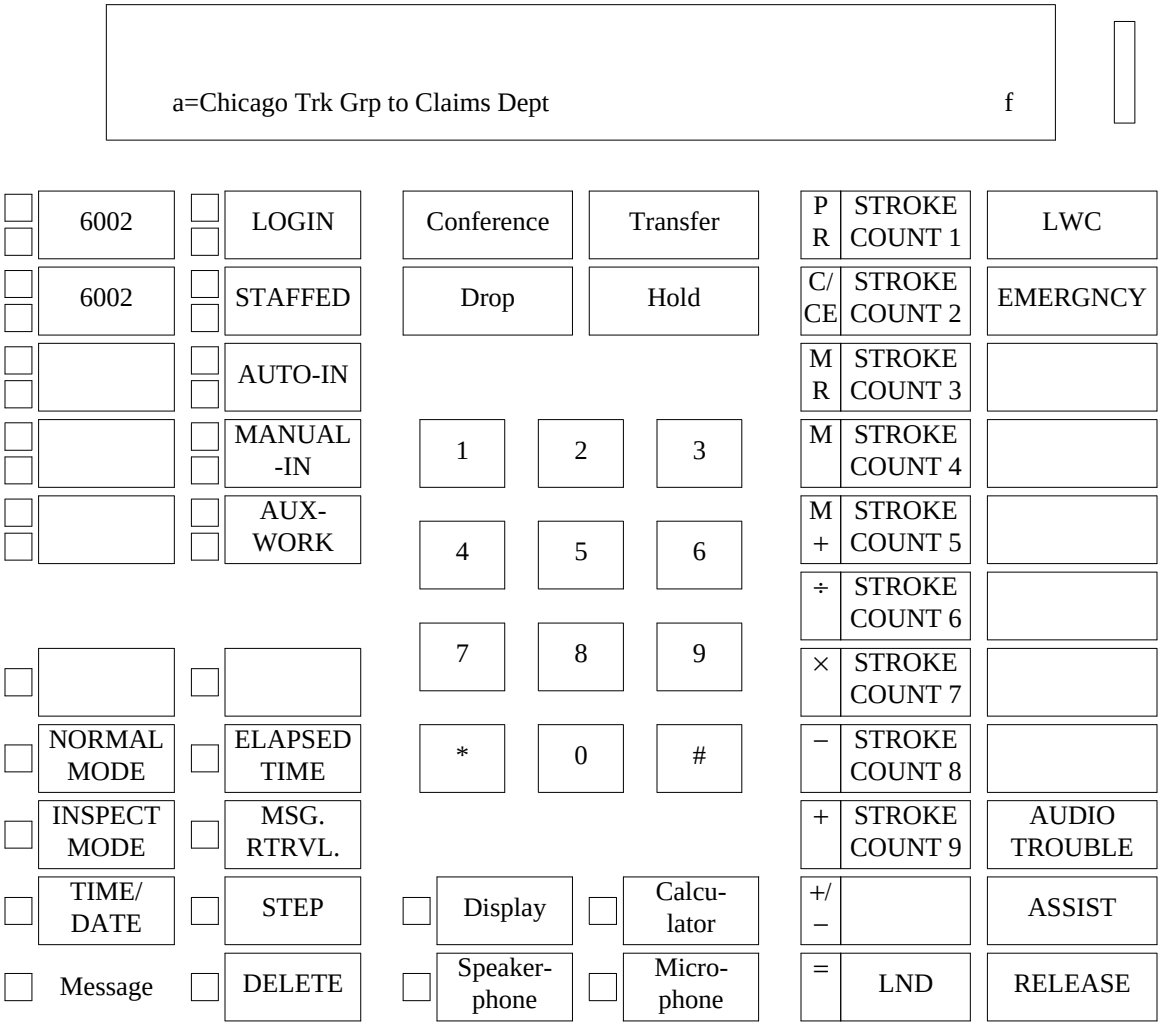

Figure 17-6. Button Configuration for ACD Agent (7407D Integrated Display Terminal)

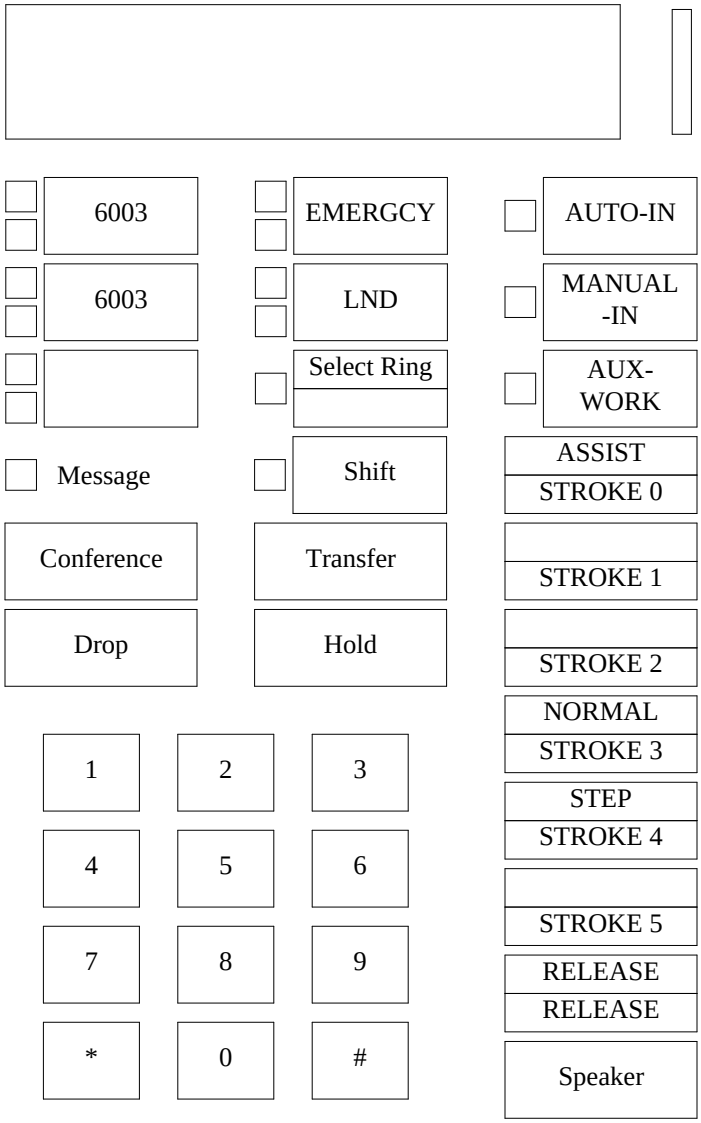

Figure 17-7. Button Configuration for ACD Agent (7406D With Display)

Figures 17-8 and 17-9 show the recommended button configurations for an agent who needs to receive terminal-to-terminal calls. Figure 17-8 shows the recommended layout for a 16-button voice terminal, and Figure 17-9 shows the layout for a 40-button voice terminal. Both of these terminals contain three appearance buttons. The first and second appearances provide basic ACD functionality, while the third appearance allows direct call completion to the agent's individual extension number.

The blank buttons on the 40-button set can be assigned as desired by the customer.

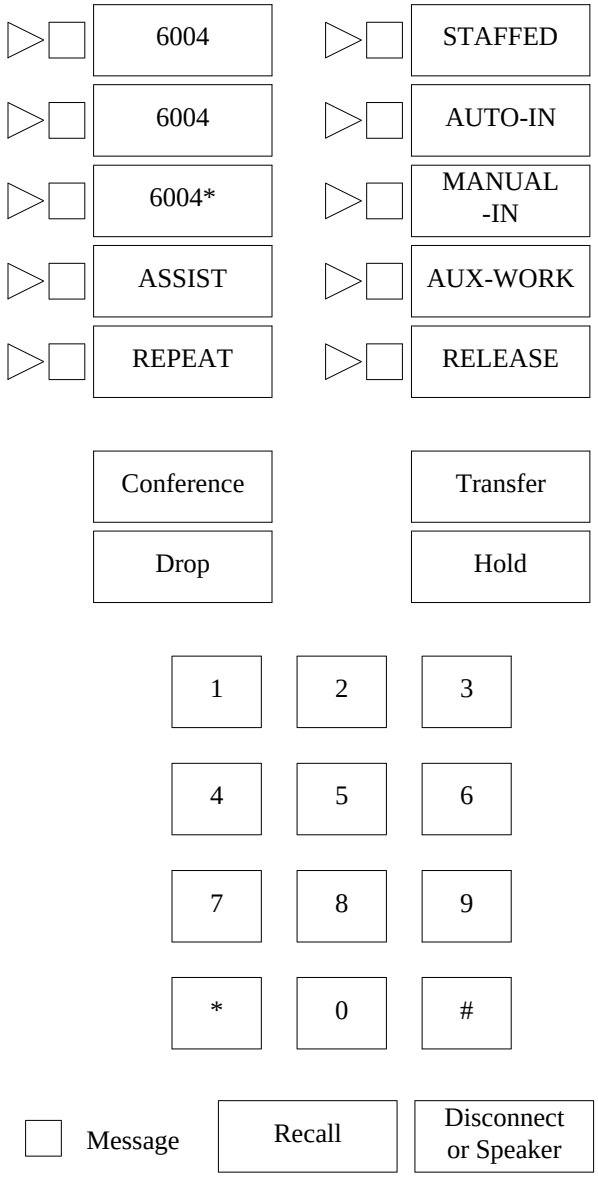

* Originating capabilities (only) are recommended for the third appearance of an agent's voice terminal.

Figure 17-8. Agent Who Also Receives Direct Calls (16-Button Set)

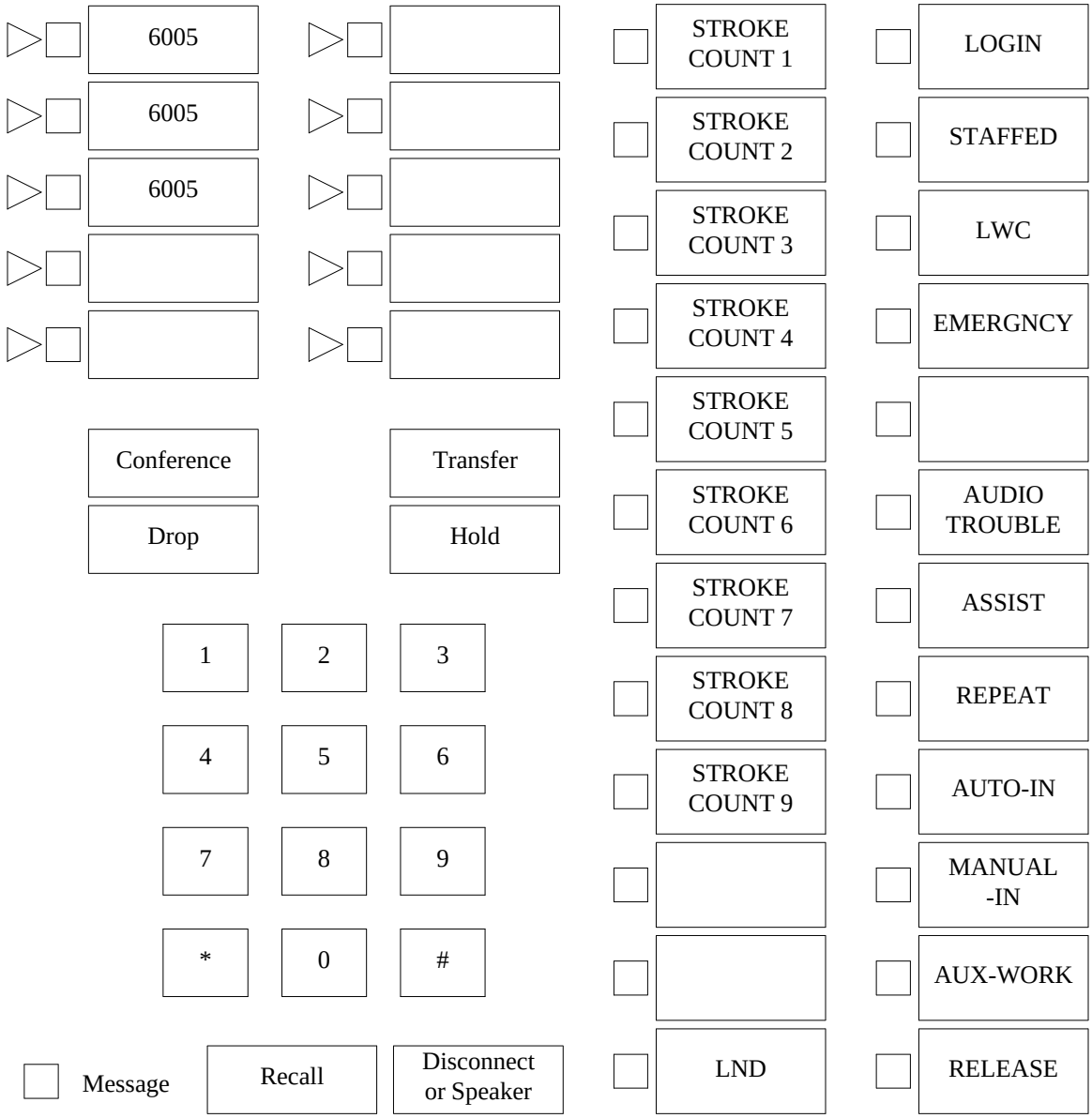

Figure 17-9. Agent Who Also Receives Direct Calls (40-Button Set)

Figure 17-10 shows the recommended button configuration for an agent who handles ACD calls for two splits. Since many of the buttons are duplicated, a larger set is required for this purpose.

The blank buttons can be assigned as desired by the customer.

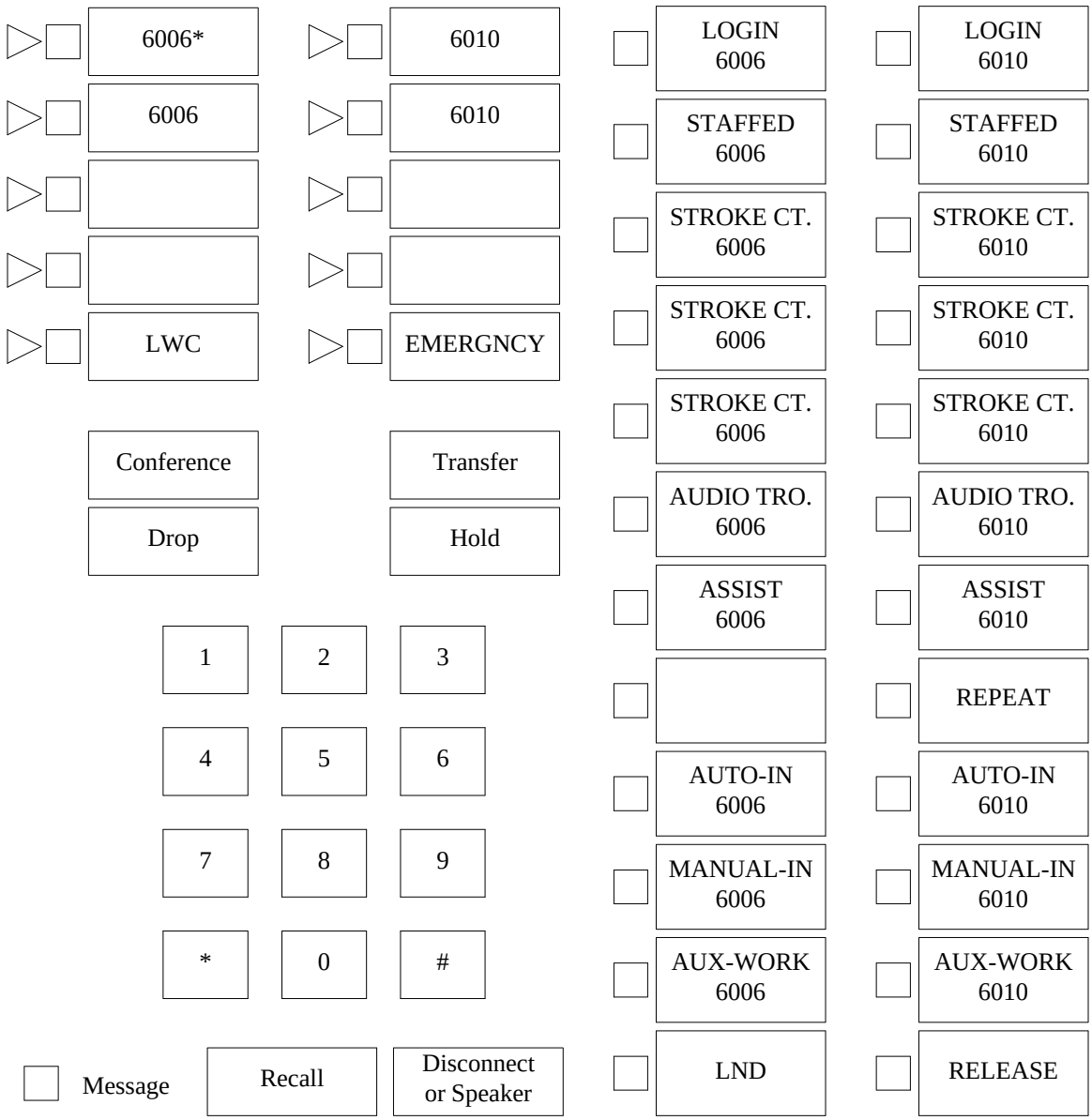

* Automatic answering can only be assigned to an appearance (or set of appearances) *of one extension number* on an agent's voice terminal.

Figure 17-10. Agent Handling ACD Calls for Two Splits (40-Button Set)

Figures 17-11 and 17-12 show the recommended button configurations for a split supervisor without agent responsibilities. Figure 17-11 shows the recommended layout for a 16-button voice terminal and Figure 17-12 shows the layout for a 40-button voice terminal. Both of these voice terminals contain three appearance buttons, but the third is optional.

The blank buttons on the 40-button set can be assigned as desired by the customer.

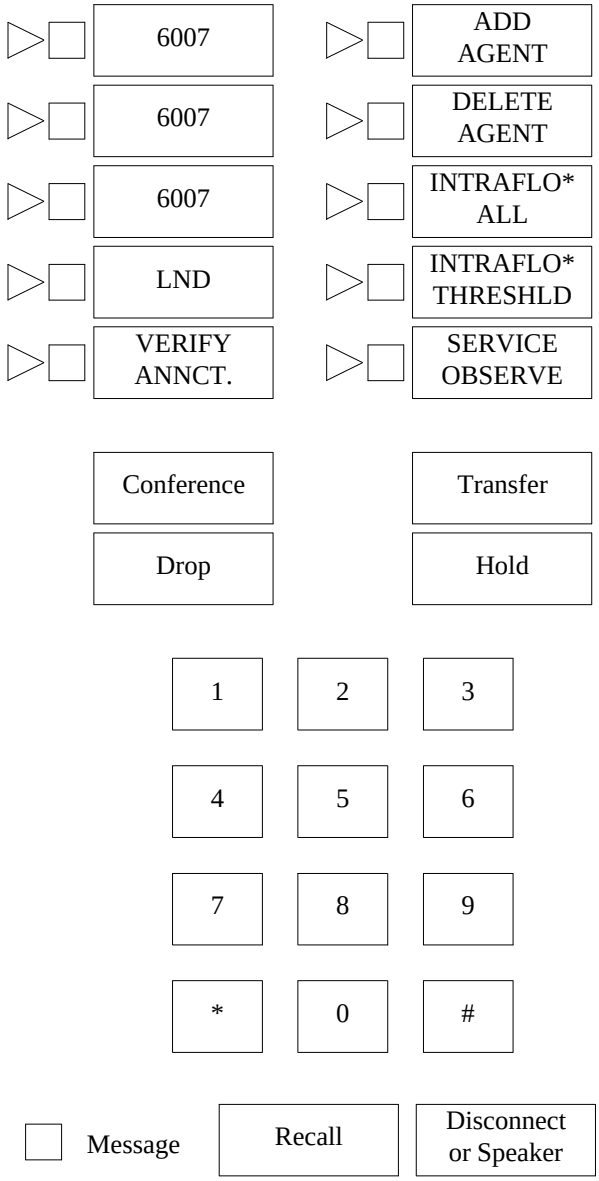

* When Call Vectoring is assigned to the switch, these buttons are not used.

Figure 17-11. Split Supervisor — Without Agent Responsibilities (16-Button Set)

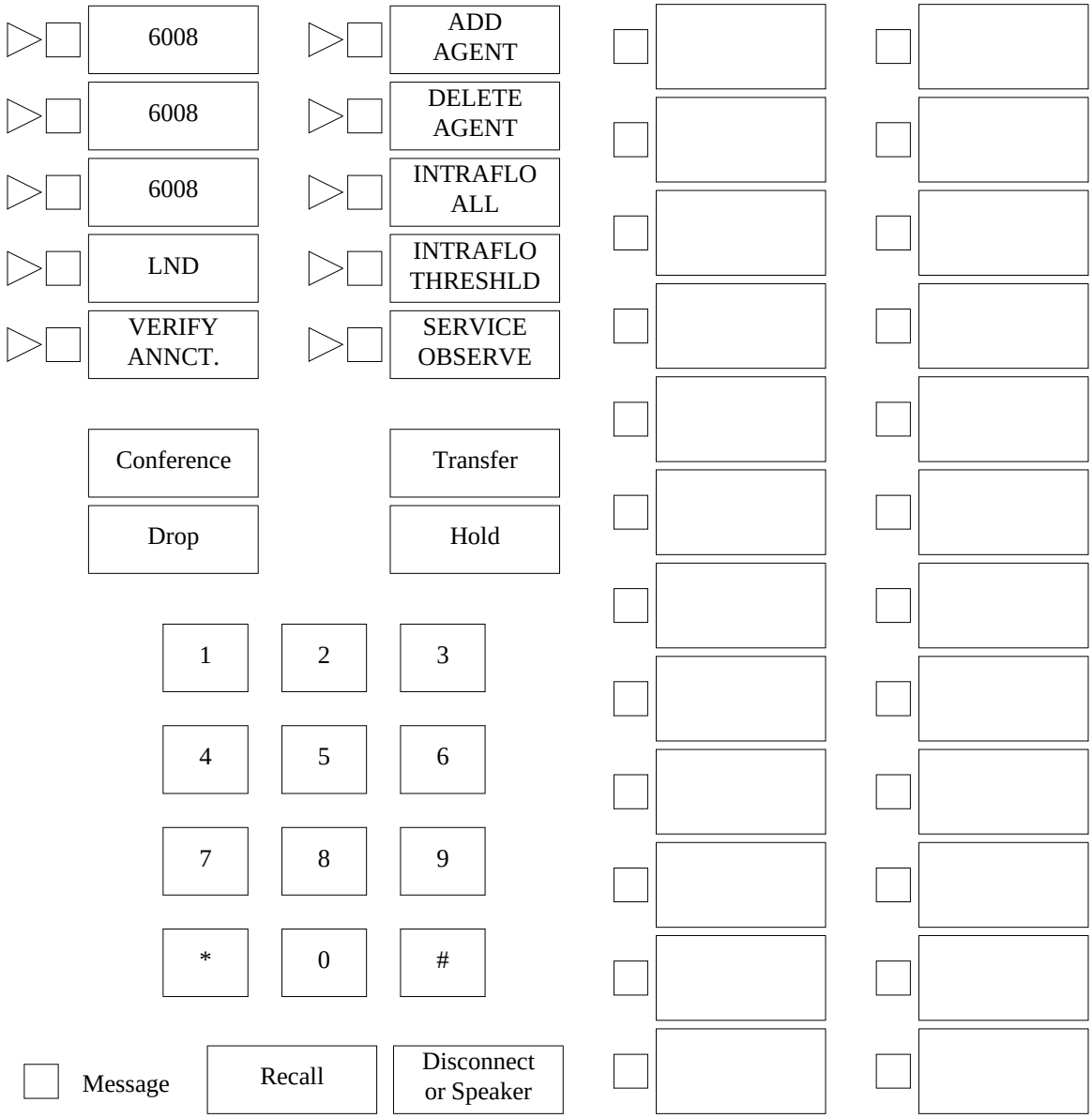

Figure 17-12. Split Supervisor — Without Agent Responsibilities (40-Button Set)

Figure 17-13 shows the recommended button configuration for a split supervisor with agent responsibilities. Since this set contains the buttons needed by an agent and the supervisor, a larger set is required for this purpose.

The blank buttons can be assigned as desired by the customer.

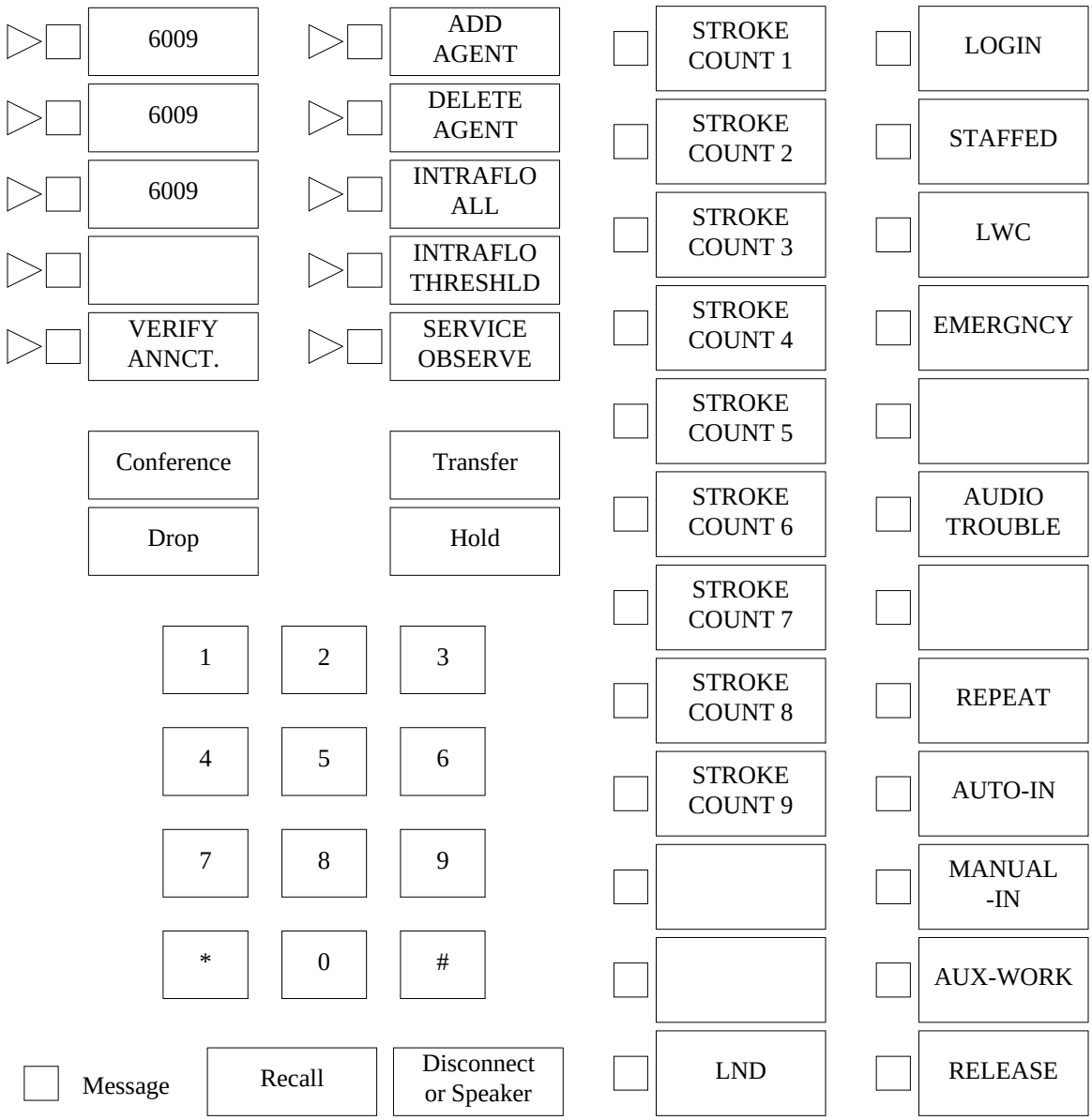

Figure 17-13. Split Supervisor — With Agent Responsibilities (40-Button Set)

USER OPERATIONS

The following are the user operating procedures for this feature.

To Log Into CMS

— A measured agent should:

- Go off-hook on an idle appearance. [Dial tone]
- Dial the Agent Log-In access code, or press the LOGIN button. [Dial tone]
- Dial the 4-digit Agent Log-In ID twice (e.g., 11101110). [Confirmation tone]

  NOTE: Agent Log-In IDs are not allowed to have leading zeros.
- Press the RELEASE button or go on-hook. (The agent is now STAFFED and automatically placed in the AUX-WORK mode.)

To Log Out of CMS

— A measured agent can:

- Verify that the voice terminal is in the STAFFED mode.
- Press the STAFFED button. (The agent is placed in the UNSTAFFED mode.)

— A measured agent can also:

- Verify that the voice terminal is in the STAFFED mode.
- Go off-hook on an idle appearance. [Dial tone]
- Dial the Agent Log-Out access code, or press the LOGOUT button. [Confirmation tone]
- Press the RELEASE button or go on-hook. (The agent is placed in the UNSTAFFED mode.)

To Receive an On-Demand Update of a Queue-Status Display During an ACD Call

— An ACD agent with a display and the class-of-service assignment should:

- Press the NORMAL MODE button. [Display shows the number of queued calls and the amount of time the oldest call has waited.]

To Receive a New ACD Call After Placing a Call On Hold

— An agent with Multiple Call Handling assigned (and a MANUAL-IN button) should:

- Press the MANUAL-IN button. [A new ACD call terminates to a terminating/originating appearance of the agent’s extension (if a call is in queue).]

- Go off-hook on the ringing appearance. [Agent is connected to and can now attend to the new ACD call.]*
- Press the HOLD button. [New ACD call is placed on hold. (There are now two calls on hold.)]

or

- Press the RELEASE button. [Agent is disconnected from the call.]

or

- Transfer the new ACD call. [Agent is disconnected from the transferred call.]

Handling choice for next call.

- Press the MANUAL-IN button again. [Another ACD call can terminate to a terminating/originating appearance (if the appearance is available).]

or

- Select a held appearance. [The agent can now attend to a held call.]

— An agent with Multiple Call Handling assigned (and an AUTO-IN button) should:

- Press the AUTO-IN button. [A new ACD call terminates to a terminating/originating appearance of the agent's extension (if a call is in queue).]
- Go off-hook on the ringing appearance. [Agent is connected to and can now attend to the new ACD call.]†
- Press the HOLD button. [New ACD call is placed on hold. (There are now two calls on hold.)]

or

- Press the RELEASE button. [Agent is disconnected from the call.]

or

- Transfer the new ACD call. [Agent is disconnected from the transferred call.]

Handling choice for next call.

- If the previous call was placed on hold, press the AUTO-IN button again. [Another ACD call can terminate to a terminating/originating appearance (if the appearance is available).]

or

- If the previous call was released or transferred, simply wait for another ACD call to arrive. [Another ACD call can terminate to a terminating/originating appearance (if the appearance is available).]

---

* During the call, the agent can press the AUTO-IN button to cross over to the following mode of Multiple Call Handling.

† During the call, the agent can press the MANUAL-IN button to cross over to the previous mode of Multiple Call Handling.

To Activate Call Forwarding for ACD Calls

The split supervisor should:

- Press an idle appearance button. [Dial tone]
- Dial the Call Forwarding—Activate access code (either unconditional or overflow), or press the INTERFLO ALL (if administered as Call Forwarding), INTRAFLO ALL, or INTRAFLO THRESHLD button. [Dial tone]
- Dial the number of the forwarding destination. [Confirmation tone]
- Press the RELEASE button or go on-hook. (This activation can be performed as many as three times. The order of activation sets the order of priority for forwarding. A distant destination for unconditional forwarding should be (for better functionality) the final destination activated. Also, unconditional forwarding to a distant destination cannot be paired with Overload Balancing.)

The system supervisor (using the designated attendant console) should:

- Press an idle loop button.
- Press the START button. [Dial tone]
- Dial the Call Forwarding—Activate access code (either unconditional or overflow). [Dial tone]
- Dial the split supervisor's extension number (to identify the split). [Dial tone]
- Dial the number of the forwarding destination. [Confirmation tone]
- Press the RELEASE button. (This activation can be performed as many as three times. The order of activation sets the order of priority for forwarding. A distant destination for unconditional forwarding should be (for better functionality) the final destination activated. Also, unconditional forwarding to a distant destination cannot be paired with Overload Balancing.)

To Establish a Default Destination for Overload Balancing

— The split supervisor should:
  - Press an idle appearance button. [Dial tone]
  - Dial the Overload Balancing—Default access code. [Dial tone]
  - Dial the AAR/ARS access code. [Dial tone]

- Dial the 7- to 10-digit number of the default distant destination. [Silence]
- Dial ‘‘#.’’ [Confirmation tone]
- Press the RELEASE button or go on-hook.

To Activate Overload Balancing to the Default Destination

— The split supervisor should:

- Press an idle appearance button. [Dial tone]
- Dial the Overload Balancing—Activate access code (either unconditional or overflow), or press the INTERFLO ALL (if administered as Overload Balancing) or INTERFLO THRESHLD button. [Dial tone]
- Press the ‘‘#’’ button. [Confirmation tone]
- Press the RELEASE button or go on-hook. (This destination is *automatically inferred* as the last priority destination for redirection of ACD calls.)

To Activate Overload Balancing to a Special Destination

— The split supervisor should:

- Press an idle appearance button. [Dial tone]
- Dial the Overload Balancing—Activate access code (either unconditional or overflow), or press the INTERFLO ALL (if administered as Overload Balancing) or INTERFLO THRESHLD button. [Dial tone]
- Dial the AAR/ARS access code. [Dial tone]
- Dial the 7- to 10-digit number of the special distant destination. [Confirmation tone]
- Press the RELEASE button or go on-hook. (This destination is *automatically inferred* as the last priority destination for redirection of ACD calls.)

To Add an Agent to a Split

— The split supervisor should:

To Remove an Agent From a Split

— The split supervisor should:

- Be sure that the agent is in the unstaffed mode.

- Press an idle appearance button. [Dial tone]
- Dial the Member Delete access code, or press the DELETE AGENT button. [Dial tone]
- Dial the extension number of the agent to be removed. [Confirmation tone]
- Press the RELEASE button or go on-hook.

To Activate Agent Override With Warning Tone

— An observer should:

- Be sure the agent is active on a call.
- Press an idle appearance button. [Dial tone]
- Dial the agent override (warning tone) access code, or press the AGENT OVERRIDE (with warning tone) button. [Dial tone]
- Dial the extension number of the agent to be observed.
- After observation, press the RELEASE button or go on-hook.

To Activate Agent Override Without Warning Tone

— An observer should:

- Be sure the agent is active on a call.
- Press an idle appearance button. [Dial tone]
- Dial the agent override (no tone) access code, or press the AGENT OVERRIDE (without warning tone) button. [Dial tone]
- Dial the extension number of the agent to be observed.
- After observation, press the RELEASE button or go on-hook.

To Activate Service Observing

— An observer should:

- Press an idle appearance button. [Dial tone]
- Press the SERVICE OBSERVE button. [Dial tone]
- After observation, press the RELEASE button or go on-hook.

To Activate 2-Way Observing During Observation

— An observer should:

- Press the SERVICE OBSERVE button. [Audible 2-way connection and Service Observe lamp flashes.]

To Restore Muting During Observation

— An observer should:

- Press the SERVICE OBSERVE button. [Silent 1-way connection, and Service Observe lamp lights steady.]

To Verify a Split's First Recorded Announcement

— The split supervisor should:

- Press an idle appearance button. [Dial tone]
- Dial the Announcement Verify access code, or press the VERIFY ANNCT button.
- Listen to the announcement.
- Press the RELEASE button or go on-hook.

To Extend an Attendant Call to an ACD Split

— An attendant should:

- Press the ANSWER button. [Talking connection between the attendant and the calling party]
- Press the START button. [The switch returns dial tone and places the calling party in soft hold.]
- Dial an associated extension number for the desired split. [Ringback tone]
- Press the RELEASE button *within 4 seconds*. [The switch places the calling party in the split's queue.]

  NOTE: If the attendant does not release within 4 seconds, the call is treated as a direct attendant call. Attendant calls to an ACD split do not enter the split's queue. Instead, System 85 scans the sp it for an available agent, and if found, completes the call to that agent. If an available agent is not found, there are two possible switch responses. First, if Attendant Call Waiting is assigned to the switch, the call waits on the split supervisor's voice terminal. Second, without Attendant Call Waiting, the switch returns busy tone to the attendant.

To Turn Off the Reload Warning Lamp

The system supervisor (using the designated attendant console) should:

- Press an idle loop button.
- Press the START button. [Dial tone]
- Press the RELEASE button.

A split supervisor should:

- Go off-hook on an idle appearance. [Dial tone]
- Dial the Reload Warning Lamp access code. [The switch returns confirmation tone, and the lamp turns off.]
- Press the RELEASE button or go on-hook.

CONSIDERATIONS

Switch Capacities

The switch can handle 1024 answering positions arranged in as many as 60 splits (30 splits in R2 V3). The splits' sizes are always built in blocks of 16 positions. Therefore, a split may contain 16, 32, 48, etc., potential answering positions. As an example, an acceptable configuration using all 1024 positions spread across 20 splits would be: 4 splits of 128 positions, 4 splits of 64 positions, 4 splits of 32 positions, and 8 splits of 16 positions. A processor occupancy evaluation can be performed to determine the impact of the desired configuration.

The Message Center feature and AUDIX use ACD splits. Hence, the use of ACD splits by AUDIX and Message Center decreases the number of ACD split and agent positions available for traditional agent operations (e.g., order taking).

An ACD split serves as the gateway to each AUDIX system. An AUDIX adjunct can only have as many as 32 voice ports. Therefore, these AUDIX gateway splits should only be configured to contain 16 or 32 (usually, 32) members.

System 85 software allows as many as 64 observers (using service observing) to observe agents at the same time. When a 65th observer tries to activate service observing, the switch returns reorder tone.

As many as 60* queue status lamps (i.e., eight 30A8 SSI panels) can be provided with the switch to display the status of ACD queues.

Each 106B display unit can monitor the status of up to 20 agents. As many 106Bs as needed can be

* R2 V3 switches have a limit of 30.

provided. For example, if a switch contained 1024 agents (the maximum for ACD on System 85), 52 display units could be provided to monitor the calling activity of every agent.

NOTE: An agent can only be monitored on one 106B display unit at a time.

Recorded Announcement Limit

The ACD software contains a 2-second task that adds an announcement to the time slot of every calling party waiting to hear the announcement.

Legal Considerations

CMS (Call Management System)

As many as 237 trunk groups (numbered from 18 to 255) can be measured by the CMS system. The remaining trunk groups (numbered from 256 to 999) can complete calls to ACD splits but are not measured by the CMS system.

The number of measured ACD splits is designated from the CMS system. This group of measured splits is presumed to be comprised of the lowest consecutively numbered splits on the switch. As an example, CMS measurement is desired for six splits. Also, four splits without CMS measurement are desired. The six measured splits must be assigned as splits *one* through *six* on the switch. The four unmeasured splits can be assigned to any remaining split number [from 7 to 60 (30, using the AP 16)]. However, to facilitate growth, a gap between the split numbers of measured and unmeasured splits is recommended. For example, the unmeasured splits could be assigned as split numbers 15, 16, 17, and 18. In this way, the next measured split can be assigned as split number *seven* (as required) without ‘‘moving’’ an unmeasured split to make space.

Measured agents in unmeasured splits are allowed. These agents are assigned in Procedure 028, Word 1. Unmeasured agents in measured splits are not allowed.

Pegging Agent Calling Activity for the CMS

Prior to R2 V3, Issue 1.3 or R2 V4, Issue 1.1, the switch notifies the CMS whenever an agent goes off-hook on an idle appearance. This method of pegging the calling activity of ACD agents can distort the corresponding CMS statistics by reporting agent state changes, feature requests, and many invalid or misdialed numbers as completed calls.

Whenever a measured agent dials an access code (or presses an Abbreviated Dialing button with an access code as the stored number), this dialing activity is tabulated as an outgoing call by the CMS system. Therefore, whenever possible, feature buttons (not Abbreviated Dialing buttons) should be assigned to the agents’ multiappearance voice terminals. In this way, an agent can change states without distorting the accumulated data that describes the agents’ call-origination activity.

Beginning with R2 V3, Issue 1.3 or R2 V4, Issue 1.1, the switch pegs ACD agent calls more accurately. Before pegging a call placed by an ACD agent, the switch will review the dialed digits and, for internal calls, monitor the calls progress. In this way, the CMS will not be notified when feature access codes, many invalid numbers, and many calls resulting in busy tone or reorder tone are dialed by ACD agents.

However, when an ACD agent places a call *outside* the System 85, digit review and call-progress monitoring will usually be more limited. In most cases, once the switch successfully seizes an idle trunk and outpulses the dialed digits for continued routing by the distant switch, the local System 85 considers the call ‘‘completed’’ and pegs the call accordingly. The

following types of outgoing calls conform to this model.

- Direct trunk-group access using trunk-group access codes
- AAR routing using location codes
- ARS routing
- Prefix-digit routing of extension numbers within a DCS cluster.

When the switch routes a DCS call according to the entire extension number, the digit review is more complete. But, call-progress monitoring finishes when an idle trunk is seized and the digits are outpulsed.

Functions Replaced by Call Vectoring

When the Call Vectoring feature is enabled in an ACD environment, some of the basic ACD functionality is disabled. The disabled ACD functionality includes:

- Associating splits with trunk groups
- Routing calls to ACD splits using associated extension numbers
- Providing the first delay recorded announcement for a split
- Providing the second delay recorded announcement for the switch
- Providing intraflow from a split's queue via the Call Forwarding feature
- Specifying a split number (from 1 to 60) as the final point in a coverage path.

The Call Vectoring feature provides an alternate method for implementing these functions, and if desired, vectors can be administered to emulate the disabled ACD functionality.

Intraflow and Interflow

Regular Operation of Intraflow and Interflow

The call forwarding function of the ACD feature (i.e., intraflow) is used to redirect ACD calls to local destinations. The overload balancing function (i.e., interflow) is used to redirect ACD calls to distant network nodes.

There can be three local destinations for redirection of ACD calls. These destinations are arranged in a priority scheme. If the first destination is unavailable, the switch checks the second and third destinations. Assign the destinations by repeatedly activating either the Call Forwarding—Follow Me (unconditional forwarding) or the Call Forwarding—Busy and Don't Answer (threshold forwarding) feature. Cancel the destinations in reverse order by repeatedly deactivating Call Forwarding.

Additionally, there can be one internode destination for redirection of ACD calls. As mentioned, this destination is provided via overload balancing. The internode destination is always automatically implemented as the last priority. The internode destination can be used alone or after the list of local destinations. As such, there can be as many as four possible destinations.

Unconditional Internode Forwarding

The Call Forwarding—Follow Me feature can be used to redirect all ACD calls to a remote destination. However, only *an AUDIX or an MCS split* is recommended as the *remote forwarding destination* for ACD calls. If any other type of remote destination is desired (i.e., a distant voice terminal, attendant, or ACD split), the overload balancing function should be used to redirect the calls.

When Call Forwarding—Follow Me is used as the mechanism for distant forwarding, the distant destination should be (for better functionality) the final destination activated.

Multiple Call Handling and CMS (Call Management System)

When multiple call handling is assigned to a split, the CMS system provides three new measurements to track the status of these agents. These measurements include:

- The number of held ACD calls
- The number of ACD calls that were abandoned while being held
- The length of time that ACD calls are held.

The CMS tracking of ACD agents is modified whenever an agent activates multiple call handling. Since the CMS system tracks agents (not calls), an agent's average call time is reduced while the agent is using multiple call handling. An agent could have more than one call on hold, but the total call-handling time would equal the time that actually elapsed.

For similar reasons, while an agent is using multiple call handling, the average talk time and the average after-call-work time are also less accurate on the real-time reports.

Multiple call handling does not reduce the accuracy of the CMS historical reports.

Published Numbers and Malicious Call Trace

For ACD applications of Malicious Call Trace, malicious calls tend to be placed by individuals outside the organization. These people are likely to place malicious calls to numbers found in the public telephone directory. When this is the case, ACD agents answering calls directed to published numbers should be equipped with a feature button for convenient activation of Malicious Call Trace.

Power Interruptions

After a power interruption, an automatic reloading occurs of switch translations from the tape into memory. The system's reload warning lamp lights. To turn off the reload warning lamp, the system supervisor should press an idle loop button, press the START button, dial the Reload Warning Lamp access code, and press the RELEASE button.

After a switch reload, all split members are unavailable for split calls. Unmeasured agents with plugged in headsets are placed in the AUX-WORK mode. Unmeasured agents without plugged in headsets are placed in the UNSTAFFED mode and must press the STAFFED button to return to the AUX-WORK mode. Measured agents are placed in the UNSTAFFED mode and must log into CMS. From the AUX-WORK mode, an agent may press the AUTO-IN or MANUAL-IN button to receive split calls.

Music-on-Hold

For R2 V4 ACDs, it is strongly recommended that each module in the switch where Music-on-Hold is desired be equipped with a music source. A music source per module reduces the use of time slots and links between modules.

NOTE: Multiple music sources are not available in R2 V3.

Agent Override

Agent override allows a voice terminal user to enter an ACD agent's calls. However, the agent must have an established call in progress.

To observe successive calls using agent override, the observer must reenter the connection after each call is established.

While an observer (using agent override) is connected to an agent's active call, features such as Conference—Three Party, Transfer, Call Waiting, and Hold are denied for use by the agent.

System 85 does not allow agent override to be activated toward a split supervisor's voice terminal.

Service Observing

To implement the service observing function, multiappearance voice terminals are required for both the agents and the observers.

Service observing allows an observer to monitor an agent's incoming and outgoing calls. For some outgoing calls, however, the observer may not be added to the connection for up to 10 seconds after the agent completes dialing. For these calls, the observer is protected from listening to unattenuated touch-tones.

For some other outgoing calls involving a ''cut-through'' connection between the local System 85 and a distant switch, an observer (without a headset) may hear unattenuated touch-tones. The recommended headsets are equipped with an automatic volume control that limits these touch-tones to an acceptable volume.

An agent's calls with an attendant or a centralized attendant cannot be observed. Also, if an agent goes on-hook, presses the HOLD or RECALL button, answers a call on hold, or is placed on hold by the other party, the switch removes the observer from the connection. The observer need only remain off-hook to be reconnected to the same call, if allowed, or to the next call where service observing is allowed.

Call Distribution to ''Unavailable'' Agents

All of the System 85 call-distribution algorithms distribute calls to agents who are perceived as ''available'' by the switch. Therefore, ACD agents should *always* announce their unavailability to the switch by routinely entering the After-Call-Work, Aux-Work, or Unstaffed mode when unavailable. Otherwise, the switch will distribute calls to unoccupied agent positions, and these calls will not be answered.

Automatic Available

Field 6 (Field 5 in R2 V3) of Procedure 026, Word 2 assigns ‘‘automatic availability’’ to every agent position in an ACD split. Automatic availability should *only* be assigned to an ACD split that is serving as the gateway to an SRU (Speech Response Unit).

Many SRUs cannot automatically restaff their agent positions after a hard processor swap or after a commercial power failure. When automatic availability is assigned to the split, the switch runs a regularly scheduled audit to automatically restaff the agent positions for the SRU.

Automatic availability *should not* be assigned to traditional ACD splits with human agents. If this is done, ACD agents lose the ability to *maintain* their requested unavailability. For example, if an agent enters the Aux-Work mode to go on break, the request is accepted. However, as soon as the scheduled audit runs, the agent is returned to the available mode, and ACD calls are distributed to the agent’s unoccupied position.

Also, automatic availability *should not* be assigned to an AUDIX split. The AUDIX system has its own method of restaffing the gateway ports after a hard processor swap or after a commercial power failure.

Stroke Count

As many as ten stroke count buttons are allowed on an agent’s voice terminal. One of these buttons serves as the AUDIO TROUBLE button. The remaining nine buttons can be used as desired by the customer.

DNIS

The DNIS function attaches names to ACD calls that use *dial-repeating* type routing to reach an ACD split. The switch receives the dialed *digits* and routes the calls to dummy *extensions*. In turn, these dummy extensions redirect (forward or cover) *every* call to the split’s queue.

For DNIS, dummy splits *should not* be used instead of dummy extensions. Dummy splits are not needed for DNIS. When automatic routing is used to direct calls to an ACD split, these trunk groups can be directly assigned to the ‘‘real’’ split and given *unique* names. In fact, using a dummy split causes an unexpected problem. Since calls are redirected from the dummy split to the real split, the real split cannot use the Intraflow—Threshold function. (Every call arriving to the real split has already redirected once.)

Single-Appearance Terminals and ACD

Although ACD agents are allowed to use single-appearance voice terminals, there are some persuasive reasons why they shouldn’t. The following is a summary of the shortcomings confronted when single-appearance voice terminals are used in the ACD environment.

- No status lamps to indicate the current agent state
- No method to change the current agent state (without disrupting the active call)
- No convenient way to use automatic answering to receive calls
- No RELEASE button to quickly disconnect a finished call
- No ASSIST button to quickly obtain assistance from the split supervisor
- No STROKE COUNT buttons to augment the CMS measurements
- No LND (Last Number Dialed) button to quickly redial outgoing calls

- No display modules or built-in display units (for DNIS, queue-status, city-of-origin, queue-of-origin, or LND displays)
- No service observing allowed (either *to* or *from* a single-appearance voice terminal)
- No multiple call handling allowed.

Hard and Soft Processor Swaps

Stable ACD calls will endure a hard processor swap.

If an ACD call is being distributed to an idle agent when a hard swap occurs, the call will fail.

ACD queues are stored in a status portion of switch memory. Therefore, if an ACD call is queued to a split when a hard swap occurs, the call is never routed to an idle agent. The queue is cleared.

If an observer is using service observing to monitor an agent when a hard swap occurs, the connection for the current call will endure a hard swap. However, service observing activations are stored in a status portion of switch memory. Therefore, after the current call is finished, the observer would have to reactivate service observing to continue monitoring the agent.

If an observer is using agent override to monitor an agent when a hard swap occurs, this connection will endure a hard swap.

If an ACD agent with multiple call handling has an ACD call on hold when a hard swap occurs, the held call is lost.

Call Forwarding and Overload Balancing relationships are stored in a translation portion of switch memory. Therefore, if a split supervisor activates intraflow or interflow and then a hard swap occurs, these relationships will endure the hard swap.

The ACD feature operates normally during a soft processor swap.

Table 17-4. ACD Function Access

FUNCTION NAME	APPLICATION	ACCESS CODE—ENCODE	FEATURE BUTTON NAME	ACCESSED BY (NOTE 1)
Call Forwarding—Follow Me	Unconditional local forwarding of split's calls (Intraflow—All).	1	INTRAFLO ALL	1, 2
Call Forwarding—BY/DA	Overflow local forwarding of split's calls (Intraflow—Threshold).	2	INTRAFLO THRESHLD	1, 2
Call Forwarding—Cancel	Deactivates split forwarding.	3		1, 2
Hold	Places call in progress on hold.	4	HOLD	2, 3, 4
Auto-In Mode	To receive calls in the automatic mode.	70	AUTO-IN	2, 3
Aux-Work Mode	To get out of receive ACD calls mode.	71	AUX-WORK	2, 3
Manual-In Mode	Enables agent position to receive a single ACD call.	72	MANUAL-IN	2, 3
Staffed Mode	Indicates to switch that agent's position is occupied.	73	STAFFED	2, 3
Member Add	Adds members to a split.	74		2, 5
Member Delete	Removes split members.	75		2, 5
Announcement Verify	Allows verification of split's recorded announcement.	76		2
Agent Override (No Tone)	Allows entry into an agent's call in progress without tone alert.	77		2, 4
Agent Override (Warning Tone)	Allows entry into an agent's call in progress with tone alert.	78		2, 4
See note at end of table.				

FUNCTION NAME	APPLICATION	ACCESS CODE—ENCODE	FEATURE BUTTON NAME	ACCESSED BY (NOTE 1)
Reload Warning Lamp	Turns off reload warning lamp after a tape load on the switch.	79		1, 2
Overload Balancing —All	Unconditional distant forwarding of split's calls.	84		1, 2
Overload Balancing —Overflow	Overflow distant forwarding of split's calls.	85		1, 2
Overload Balancing —Default	Establishes default destination for overload balancing.	86		2
Overload Balancing —Cancel	Deactivates either overload balancing condition.	87		1, 2
Agent Log In	Logs an agent onto the CMS system.	88		2, 3
Agent Log Out	Logs an agent off of the CMS system.	89		2, 3
MCT Activate	Activates a trace to identify the calling party of a malicious call.	100	EMERGNCY	2, 3
Release Call	Releases any type of call in progress.	—	RELEASE	2, 3, 4
Repeat Announcement	Repeats city-of-origin message to agents.	—	REPEAT	2, 3
Service Observing	Allows extended observation of an ACD agent's line.	—	SERVICE OBSERVE	2, 3, 4
Split Supervisor Assistance	Allows an agent to request help from the split supervisor.	—	ASSIST (NOTE 2)	3
Audio Difficulty	Tabulates occurrences of poor transmission quality on calls.	—	AUDIO TROUBLE	2, 3
Stroke Count	Allows the CMS system to count events of current interest.	—	STROKE COUNT	2, 3

NOTE 1: 1 = System Supervisor (using the designated attendant console)
2 = Split Supervisor
3 = ACD Agent
4 = Observer
5 = Switch Administrator (using an SMT).

NOTE 2: The ASSIST button is an Abbreviated Dialing button with the split supervisor's individual extension number as the stored number.

NOTE 3: Where an encode is shown in the third column, Abbreviated Dialing buttons (using the access code as the stored number) can *always* be assigned to multiappearance terminals.

INTERACTIONS WITH OTHER FEATURES

The following System 85 features affect or are affected by the operation of this feature.

Attendant Call Waiting

Attendant calls to a local ACD split are not queued. The switch attempts to complete the call to an idle agent either by scanning the agent queue or by scanning the split. If no idle agents are found in the split, the call waits on the split supervisor's single-appearance terminal. When an attendant places a call to an individual ACD agent's single-appearance terminal and that terminal is busy, the call waits on the busy terminal when Attendant Call Waiting is provided.

Attendant calls cannot wait on an ACD agent's single-appearance voice terminal while an observer (using agent override) is connected to the agent's call.

Attendant DXS (Direct Extension Selection) With BLF (Busy Lamp Field)

In a switch with 3- or 4-digit extensions, an attendant can use the appropriate DXS buttons to place or extend calls to the associated extension number of an ACD split. However, since a split's queue is never really ''busy,'' the BLF lamps adjacent to these DXS buttons are never lit.

Automatic Callback

Automatic Callback can be activated toward the individual extension number of an ACD agent. However, when this is done toward an agent in a busy split (i.e., calls are waiting in queue), a race condition occurs. The switch simultaneously begins the Automatic Callback sequence and the distribution of the next queued call when the agent goes on-hook. Since the ACD call-distribution algorithms are considerably faster, the agent will usually (if not always) receive the ACD call first.

Automatic Callback can also be activated toward an associated extension number of an ACD split. When this is done, the callback sequence is performed against the split supervisor's voice terminal. Again, if the split is busy and if the split supervisor is answering ACD calls, the same race condition occurs with the same results.

> **NOTE:** Automatic Callback is usually activated toward an agent to facilitate calling from within the organization, and is always more effective when activated toward single-appearance terminals. If ACD agents (using single-appearance terminals) need to receive intracompany calls, the race condition can be avoided by using the Priority Calling feature. However, the better solution would be to provide agents with multiappearance voice terminals equipped with either two or three appearances. In this way, an extra appearance is available for routine communication with other departments.

Busy Verification of Lines

An attendant can use the Busy Verification of Lines feature to check the busy/idle condition of the terminals in an ACD split. The agent's terminals can be checked whether or not the terminals are available for split calls. If Busy Verification of Lines is activated toward an ACD associated extension number, only the split supervisor's line is verified.

Call Coverage

An ACD split (including a Message Center split or an AUDIX system) can be assigned as the final point in a coverage path. However the split number, rather than an associated extension number, is used to designate the coverage point. Therefore, all coverage calls which are redirected to an ACD split are placed in the nonpriority queue.

On an attendant extended call to a principal with coverage assigned to an ACD split (including a Message Center split), the attendant receives coverage tone before the call is redirected to the ACD split. During the 4-second period of silence following the tone (the caller response interval), the attendant should release the call to allow the call to be queued. Also, the attendant can release the call prior to the tone.

CDRR (Call Detail Recording and Reporting)

The CDRR feature records the trunk dial access code as the calling number on an incoming ACD call. The extension number of the answering agent, rather than the split's published number, is recorded as the dialed number.

Call Forwarding—Busy and Don't Answer

The Call Forwarding—Busy and Don't Answer feature cannot be used to forward calls to an associated extension number of an ACD (including AUDIX) split. When this is attempted, the switch returns intercept tone.

When the split supervisor activates this feature, ACD calls are forwarded to a local destination when an overflow condition occurs. The Don't Answer portion of this feature does not apply.

The split supervisor cannot use this feature to forward calls for the supervisor's individual extension number. Activation of this feature only forwards calls which are directed to the split's queue.

There can be three forwarding destinations arranged in a priority scheme. If the first priority destination is unavailable, the second and third destinations are checked. However, if the first or second priority destinations were an attendant or an ACD split (without the inflow level specified for the split), the remaining priority destinations would not be checked. Instead, a forwarded call would unconditionally enter the attendant's or the split's queue.

The forwarding destinations are assigned by repeated activation of the Call Forwarding—Busy and Don't

Answer feature. Priority is determined by the order of activation. The destinations are canceled in reverse order by repeated deactivation of the feature.

When an ACD call is forwarded to another local split, the caller hears the first delay recorded announcement corresponding to the initially dialed split.

Call Forwarding—Don't Answer

An ACD split supervisor cannot activate Call Forwarding—Don't Answer to forward the supervisor's calls. When an ACD split supervisor activates Call Forwarding—Don't Answer, the split's calls are forwarded to a local destination in an overflow condition (as if Call Forwarding—Busy and Don't Answer were instead assigned to the supervisor's class of service).

For ACD calls, there can be three forwarding destinations arranged in a priority scheme. If the first priority destination is unavailable, the second and third destinations are checked. However, if the first or second priority destination is an attendant or an ACD split (without the inflow level specified for the split), the remaining priority destinations would not be checked. Instead, a forwarded call would unconditionally enter the attendant's or the split's queue.

When an ACD call is forwarded to another local split, the caller hears the first delay recorded announcement corresponding to the initially dialed split.

Call Forwarding—Follow Me

The Call Forwarding—Follow Me feature can be used to forward all calls to an associated extension number of an ACD (including AUDIX) split. When this is done, the forwarded calls enter the split's queue.

The split supervisor cannot use this feature to forward calls for the supervisor's individual extension number. Activation of this feature only forwards calls which are directed to the split's queue.

There can be three forwarding destinations arranged in a priority scheme. If the first priority destination is unavailable, the second and third destinations are checked. However, if the first or second priority destination is an attendant or an ACD split, the remaining priority destinations are never checked. Instead, a forwarded call would unconditionally enter the attendant's or split's queue.

The destinations are assigned by repeated activation of the Call Forwarding—Follow Me feature. Priority is determined by the order of activation. The destinations are canceled in reverse order by repeated deactivation of the feature.

When an ACD call is forwarded to another local split, the caller hears the first delay recorded announcement corresponding to the initially dialed split.

Call Pickup and CMS (Call Management System)

An agent can be active on an ACD call and elect to pickup a call directed to the agent's Call Pickup group. Using a single-appearance voice terminal, this can be done by going on-hook (to finish the picked up call) and allowing the held ACD call to ringback the agent. However, when this method is used, the callback by the held ACD call is again tabulated by CMS as an answered ACD call.

Call Vectoring

When Call Vectoring is enabled in an ACD environment, the abandon call search function operates normally. During any step of the vector processing for incoming calls, the check for abandoned calls is performed just before ringing an idle agent. The switch only distributes the call to an agent when the trunk is found active at the CO (Central Office).

When Call Vectoring is enabled in an ACD environment, the multiple call handling function operates normally. When an agent receives a distributed call that was processed by a vector, the agent can place the call on hold and remain available to receive another call that is distributed from the split's queue.

When Call Vectoring is enabled in an ACD environment, queue warning lamps can still be provided. (The warning lamp threshold for each split is still assigned in Procedure 026, Word 1, Field 5.) However, the meaning of lamp activity on the 30A8 is slightly modified. The appropriate lamp still lights when the number of calls in the split's queue is greater than or equal to the assigned threshold. With Call Vectoring assigned, however, the assigned queue warning threshold *can be a different value* than the parameter(s) within the vector itself that actually divert calls to alternate destinations.

Call Waiting

Call Waiting is denied to an ACD agent while an observer (using agent override) is connected to the agent's call.

CMDR (Centralized Message Detail Recording)

Same as the SMDR interaction.

Conference—Three Party

When an agent adds another agent to an ACD call, the resulting conference is not considered a work-related activity for the second agent. The second agent is not removed from the agent queue.

When an agent adds another agent to a work-related outgoing call, the resulting conference is not considered a work-related activity for the second agent. The second agent is not removed from the agent queue.

When an agent adds another agent to a personal call, the resulting conference is not considered a work-related activity for the second agent. The second agent is not removed from the agent queue.

A voice terminal user on a 2-party call is allowed to add the recipient of an ACD call to a 3-party conference. However, the second button press (of the switchhook, RECALL button, or CONFERENCE button) in the conferencing operation is ignored until the receiving agent has actually answered the call. (That is, the second button press is ignored while the call is queued.)

Display—Voice Terminal

When queue-status displays are assigned in the ACD environment, these displays use 8 characters (6 digits and 2 spaces) of the available 40 characters. Further, these eight characters overlap with the source and destination fields on the 40-character display. Therefore, unless the source and destination names are fairly brief, these names are more likely to be truncated when queue-status displays are enabled.

DCS (Distributed Communications Systems)

In a DCS environment, direct attendant calls and attendant extended calls to an ACD split in another node are queued. However, for attendant extended calls, the attendant does not receive confirmation tone to indicate that the queue has been entered.

Extension Number Portability

An extension number must be removed from an ACD split, if assigned, before the number can be ported to another node.

FRL (Facilities Restriction Level)

When interflowed ACD calls use the AAR or ARS feature to route these calls outside the local switch, the FRL of the split's supervisor is used to determine whether these calls can use the available network facilities.

Hold

If an ACD agent (including Message Center agents) with queue-status display places an ACD call on hold, then the queue-status display is automatically updated as the agent returns to the held call for subsequent handling.

Hunting

Any individual extension number of an ACD agent may be included in a Hunting sequence. Hunting functions normally in this situation. However, an ACD split associated extension number cannot be assigned to a Hunting sequence. When this is attempted, an administration error will occur.

IPA (Interpartition Access)

To protect the privacy of ACD agents, service observing is only allowed from within the same extension partition or Extension Partition 0. An observer in a different extension partition (but the same partition group) as an ACD agent cannot observe the agent using service observing.

To protect the privacy of ACD agents, agent override is only allowed from within the same extension partition or Extension Partition 0. An observer in a different extension partition (but the same partition group) as an ACD agent cannot observe the agent using agent override.

Last Number Dialed

The LND (Last Number Dialed) feature stores and redials calls to an associated extension number of an ACD split.

ACD agents can use the LND feature to minimize redialing calls to other ACD agents, to other departments, or to other locations outside the switch.

Since the ASSIST button is an Automatic Dialing button, the LND feature does not redial assistance calls to the split supervisor. Instead, the LND feature will redial the last digits that were manually dialed before the assistance call.

Malicious Call Trace

If an ACD agent receives a malicious call, the Malicious Call Trace feature can be activated by the ACD agent. It is preferable, when malicious calls are more than a rare occurrence, to assign the EMERGNCY button to every agent's multiappearance voice terminal.

If an ACD agent receives a malicious call and activates the Malicious Call Trace feature while the agent is being observed using service observing (as opposed to Agent Override), the observer may continue to monitor the malicious call and subsequent calls normally. Furthermore, service observing allows the observer to *begin observation* after Malicious Call Trace has been activated.

City/Queue-of-Origin Announcement. An ACD agent cannot activate Malicious Call Trace during a city-of-origin or a queue-of-origin announcement. When this 2-second announcement finishes, a trace can be activated.

CMS (Call Management System). With CMS, messages are sent to the processor (3B or AP 16) and interpreted as EXCEPTION messages by the CMS software. An Exception Message will appear on any

real-time report displaying data for that split.

Agent Override. If an Agent Override call is attempted toward a line involved in a Malicious Call Trace, the calling party receives intercept tone.

Message Center Service

One Message Center split can use intraflow to divert excess calls to another Message Center split. However, when this is done, it is recommended that both splits be assigned to the same AP. If the MCS splits are assigned to different APs, the diverted calls will still enter the backup split's queue, and these calls will be distributed to available MCS agents. But, the Coverage Screen will not be displayed for the answering agent in the backup split.

Music-on-Hold Access

For R2 V4 ACDs, it is strongly recommended that each module in the switch where Music-on-Hold is desired be equipped with a music source. A music source per module reduces the use of time slots and links between modules.

NOTE: Multiple music sources are not available in R2 V3.

Override

When Override is activated toward the individual extension number of a busy ACD agent, the override call intrudes into the agent's active call. When Override is activated toward the individual extension number of an idle ACD agent, the override call alerts the agent with 3-burst ringing.

When Override is activated toward an associated extension number of an ACD split and the split supervisor is busy, the call intrudes into the split supervisor's active call. When the split supervisor is idle, the call alerts the supervisor with 3-burst ringing. (The Override call does not enter the split's queue.)

NOTE: If the called agent (or split supervisor) is using a multiappearance terminal, an override call (in preference to intruding into the active call) will terminate to an idle appearance (if available) with 3-burst ringing. When no idle appearances are available, the override call will intrude into the active call.

Precedence Calling

The precedence level of AUTOVON calls that are directed to or forwarded to an ACD split are checked. If the precedence level is higher than ''Routine,'' the call does not enter the split's queue. Instead, the call is redirected to the attendant queue.

Priority Calling

When Priority Calling is activated toward an individual single-appearance terminal in an ACD split, the call waits on that terminal. When Priority Calling is activated toward an associated extension number of an ACD split, the call always waits on the split supervisor's single-appearance terminal. (The priority call does not enter the split's queue.)

> **NOTE:** If the called agent (or split supervisor) is using a multiappearance terminal, a priority call will terminate to an idle appearance (if available) with 3-burst ringing. If no idle appearances are available, the switch returns busy tone to the calling party.

Priority calls cannot wait on an ACD agent's single-appearance voice terminal while an observer (using agent override) is connected to the agent's call.

SMDR (Station Message Detail Recording)

The SMDR feature records the trunk dial access code as the calling number on an incoming ACD call. The extension number of the answering agent, rather than the split's published number, is recorded as the dialed number.

Tenant Services

Automatic-in type routing to ACD splits is not partitioned. There are no checks in Procedure 115 to ensure that the partition of an automatic-in type trunk group matches the partition of the assigned split. It is the responsibility of the system manager to ensure that these partition numbers match.

Dial-repeating type routing to ACD splits is partitioned. When the digits of an associated extension number are either passed to System 85 from the serving switch or dialed from inside the switch, the Tenant Services feature makes the necessary partitioning checks. Associated extension numbers are assigned to partitions using Procedure 000, Word 4.

There are no checks made in switch administration to ensure partitioning of ACD splits. When administered from the MAAP panel or the SMT, a single split may contain agents from several extension partitions. Once an ACD call enters the split's queue, the call will terminate to the selected available agent regardless of the agent's extension partition assignment.

In general practice, each ACD split provides a functional division of call answering responsibilities. For most (if not all) ACD applications, it is recommended that each split contain only agents assigned to the same extension partition. The System Manager should be careful to follow this guideline.

The ACD feature also allows a split supervisor (in a partition other than Extension Partition 0) to add and remove agents to/from the supervisor's ACD split. When this method for adding agents is used, the Tenant Services feature provides a check to ensure that the added agent belongs either to the supervisor's extension partition or to Extension Partition 0. If not, the switch returns intercept treatment to the split supervisor.

A split supervisor in Extension Partition 0 is allowed to add an agent from any partition to any ACD split in the switch.

An observer (in a partition other than Extension Partition 0) is allowed to use agent override to monitor the call-handling activity of an agent in the same extension partition or in Extension Partition 0. When the observer attempts to activate agent override toward an agent in any other partition, the switch returns intercept treatment to the observer.

An observer in Extension Partition 0 is allowed to use agent override to observe any agent in the switch.

An observer (in a partition other than Extension Partition 0) is allowed to use service observing to monitor the call-handling activity of an agent in the same extension partition or in Extension Partition 0. When the observer attempts to activate service observing toward an agent in any other partition, the switch returns intercept treatment to the observer.

An observer in Extension Partition 0 is allowed to use service observing to observe any agent in the switch.

Transfer

When an agent transfers an ACD call to another agent, the transferred call is not considered a work-related activity for the second agent. The second agent is not removed from the agent queue.

When an agent transfers a work-related outgoing call to another agent, the transferred call is not considered a work-related activity for the second agent. The second agent is not removed from the agent queue.

When an agent transfers a personal call to another agent, the transferred call is not considered a work-related activity for the second agent. The second agent is not removed from the agent queue.

Variable Format Call Detail Recording

The CDR feature records the trunk dial access code as the calling number on an incoming ACD call. The extension number of the answering agent, rather than the split's published number, is recorded as the dialed number.

RESTRICTING FEATURE USE

The MAAP and SMT can apply Termination Restriction to the individual extension number of an ACD agent. This has the effect of preventing direct calls from terminating at the agent's terminal. However, calls to the ACD split terminate normally at the agent's position.

An attendant can apply Controlled Termination Restriction to the individual extension number of an ACD agent. This has the effect of preventing direct calls from terminating at the agent's terminal. However, calls to the ACD split terminate normally at the agent's position.

HARDWARE REQUIREMENTS

The ACD feature requires the following additional or special hardware.

To provide the CMS option:

- A local 3B2 or 3B5 with CMS software to manage ACD activity. (An AP 16 can also be used with R2 V3 switches and *nonvectoring* R2 V4 switches.)
- A dedicated DCIU link to the local 3B2, 3B5, or AP 16.

To provide the recorded announcements:

- 13A announcement system(s) (eight channels per 13A), A 36A voice coupler, with a 2012D power transformer, is required for each 13A announcement trunk.

or

- KS-65270, L12 digital announcer(s) (single-channel announcement set) to provide the recorded announcements. One SN228B or SN229 line circuit (four circuits per pack) must be provided for each KS-65270 to support remote announcement recording capability.
- Space in an auxiliary cabinet to house the announcement set(s)
- An auxiliary trunk circuit of an SN231 circuit pack for each announcement trunk (four circuits per SN231)

To provide the queue warning lamp control option:

- 30A8 system status indicator panel to display queue warning status for eight ACD splits
- SN241 contact interface (eight circuits per circuit pack) for 30A8.

To provide lamp monitoring of ACD agents:

- 106B display unit to display the status of 20 ACD agents
- Two circuits of an SN224 MFET circuit pack to control each 106B display unit (four hybrid circuits per SN224).

To provide convenience for agents, supervisors, and observers:

- Headsets
  - — 3122 Starset II Plantronics* headsets for hands-free operation of the agents

    NOTE: Several agent models are available.
  - — 3122 Starset Supra (supervisory model) headsets for convenient operation of split supervisors and observers

    NOTE: Several supervisory models are available.

    NOTE: The recommended Starset headsets are equipped with an automatic volume control to limit unattenuated touch-tones to an acceptable volume.

    NOTE: The Starset headsets are not compatible with the 7407D voice terminal. (However, the Starmate headsets can be used with this voice terminal.)
- 31712 headset adapters to connect headsets to voice terminals.

To provide display capabilities for agents:

- 7406D, 7407D, or 7405D (with D401A display module) voice terminals.

---

* Trademark of Plantronics, Inc.

FEATURE ADMINISTRATION

Assignment of the ACD feature is on a per-system, per-trunk group, and a per-terminal class-of-service basis. The customer can partially administer this feature using the SMT (System Management Terminal) or the TCM (Terminal Change Management) feature. This feature can also be administered using CSM (Centralized System Management).

The following are the applicable MAAP and SMT procedures.

MAAP AND SMT PROCEDURES AUTOMATIC CALL DISTRIBUTION			
PROCEDURE	**WORD**	**PURPOSE**	**SMT**
000	1	Assigns the voice terminal class of service to the agents' extension numbers.	Yes
001	—	Assigns an associated extension number to a split supervisor's individual extension number.	Yes
010	1	Assigns ACD membership to an agent's voice terminal class of service. Assigns agent override to an observer's class of service. Also, use this procedure to assign ACD Queue-Status Display to an ACD agent's class of service.	Yes
026	1	Administers the split size, the ICI message number, the queuing trunk group, the outflow and inflow levels, the lamp control circuit for the queue warning indicators, type of hunting to an ACD split, and the type of ACD split. Each split is identified by a split number [a number between 1 and 60 (30 in R2 V3)].	Yes
026	2	Assigns the split supervisor's extension number, the queue directory number (first associated extension number), priority extension number, and auto available* to a split. This procedure also assigns Multiple Call Handling to a split (R2 V4 only).	Yes
026	3	Assigns nonsupervisory members to a split in the order in which direct or circular hunting is to take place.	Yes
026	4	Assigns the ACD system supervisor and warning tone for service observing.	Yes
027	1	Assigns the first delay recorded announcement and the timing intervals preceding the first and second delay recorded announcements to an ACD split.	Yes
027	2	Assigns the second delay recorded announcement to the switch.	Yes
027	3	Assigns the city-of-origin and queue-of-origin announcements to an ACD split.	Yes
028	1	Assigns an extension or a range of extensions to be measured by CMS.	Yes
028	2	Busies out the CMS system.	Yes
052	1	Assigns automatic answering (line type) to an appearance (or a set of appearances) of a multiappearance terminal.	Yes
* ''Auto available'' *should not* be assigned to an AUDIX split or to splits with human agents.			

MAAP AND SMT PROCEDURES AUTOMATIC CALL DISTRIBUTION (Contd)			
PROCEDURE	**WORD**	**PURPOSE**	**SMT**
054	1	Administers the feature buttons, the stroke count buttons, and the RELEASE key for the automatic answering mode. Refer to Table 17-D for a cross-reference of applicable feature buttons and dial access encodes.	Yes
☞ 054	2	Assigns the SERVICE OBSERVE button to an observer's multiappearance voice terminal.	Yes ☜
060	1	Assigns a split member to a position on the 106B display.	Yes
060	2	Associates the halves of the 106B display.	Yes
100	1	Assigns the queuing trunk type, and the announcement trunk type to a trunk group.	No
115	—	Assigns trunk-group termination to an ACD split, and priority queuing and CMS measurement to the trunk group.	No
150	—	Assigns the equipment locations of auxiliary trunks and incoming ACD trunks to their trunk-group numbers.	No
155	—	Administers the contact interface circuit for the queue warning indicators.	No
204	1	Designates the desired alphanumeric display for incoming calls to a split's special queue trunk group that reach an attendant.	No
256	1	Assigns the DCIU data link characteristics for CMS.	No
256	2	Administers the level 2 timers and counters for the DCIU link.	No
256	3	Administers the level 3 timers and counters for the DCIU link.	No
257	1	Administers the components and priority status of the DCIU channel.	No
257	2	Administers the DCIU port for the DCIU channel.	No
258	1	Copies the translation changes made using Procedures 256 and 257 to working tables.	No
258	2	Refreshes the DCIU temporary translation tables before using Procedures 256 and 257.	No
275	4	Assigns abandon call search, answer supervision (R2 V3 only), and CMS for ACD to the system class of service.	Yes
350	1	Assigns the first digit of the feature dial access codes (if required).	No
350	2	Assigns the ACD feature dial access codes. Refer to Table 17-D for a cross-reference of the applicable dial access codes and feature buttons.	No

The following are the applicable TCM path names used with the AP 16.

TCM SCREENS — AUTOMATIC CALL DISTRIBUTION	
PATH NAME	**PURPOSE**
terminal-change terminal display unit	Displays or prints the split members being monitored by a 106B display unit.
terminal-change class-of-service attributes	Assigns ACD membership to a voice terminal class of service and assigns agent override to a voice terminal class of service.
terminal-change extensions attributes	Assigns the class of service to an extension number.
terminal-change group call-distribution attributes	Administers the characteristics of the ACD split.
terminal-change group call-distribution members	Add or removes agents to/from an ACD split. Also, use this screen to assign automatic answering to the agent's extension. This screen is also used to assign the split's priority associated extension number.
terminal-change group call-distribution trunk-groups	Assigns trunk group termination to an ACD split and priority queuing to the trunk group.
terminal-change system parameters (select the Call-Distribution option)	Declares the attendant-console number of the system supervisor and assigns abandon call search and answer supervision to the system class of service.
terminal-change terminal buttons	Assigns the feature buttons for the ACD feature. Refer to Table 17-D for a cross-reference of applicable feature buttons and dial access encodes.

The following is the applicable FM path name used with the AP 16.

FM SCREEN — AUTOMATIC CALL DISTRIBUTION	
PATH NAME	**PURPOSE**
facilities-mgmt dciu link-assignments	Generates a report of the current DCIU link assignments.

The following are the applicable CSM Command Paths utilizing the **admin** area of TCM or FM.

CSM SCREENS — MASKS AUTOMATIC CALL DISTRIBUTION		
APPL'N	**OBJECT**	**PURPOSE**
TCM	extension	Administers the voice terminal class of service to the agents' extension number and assigns access to message retrieval, membership in call coverage, and the associated AP or AUDIX machine number.
TCM	associated-extension	Assigns an associated extension number to a split supervisor's extension number. This command also assigns a name display to the associated extension. Associated extension numbers are used to route calls to an ACD split.
TCM	class-of-service	Administers the ACD features and/or restrictions that are assigned to the extension's line class of service. These features include ACD member, ACD override, and ACD queue status display. Restriction levels that can be defined with this command are: code restriction (0-3), facility restriction (0-7), or maximum level (1-6). Precedence levels only apply if AUTOVON is enabled).
TCM/FM	acd-grp	Administers ACD groups and assigns attributes to the groups. These groups include group size, machine type (message center or AUDIX), ICI message number, queue directory number, priority extension number, and multiple call handling. (If call vectoring is present, the ICI message number, queue directory number, inflow level, and priority extension number do not apply.)
TCM/FM	acd-members	Administers single or multiple members of the ACD group. Members are assigned a member number and can be identified by either the member number or the member's extension number.
TCM/FM	sys-cos	Administers the system class of service for the ACD feature.

CSM SCREENS — MASKS AUTOMATIC CALL DISTRIBUTION (Contd)		
APPL'N	**OBJECT**	**PURPOSE**
TCM	call-coverage-path	Administers the call coverage path and defines its attributes including coverage criteria, no-answer interval, and the coverage points. This command can link two call coverage paths for dual coverage. If the last point in the coverage path is an ACD group, the ACD group must be defined. System 85 R2 V4 — If call vectoring is present, the last point in the path may be a vector directory number, but may **not** be an ACD group. If the last coverage point is defined as an ACD group associated with an AP or with an AUDIX machine without call vectoring, the AP or AUDIX number must be the same as the AP or AUDIX number for all other extensions covered by points in the path. If the last coverage point is defined as a VDN whose associated vector references with an ACD group (System 85 R2 V4 with call vectoring), the AP or AUDIX number must be the same as the AP or AUDIX number for all other extensions covered by points in the path.
TCM	The command will be set type: i.e., 12-button, 36-button, bct, idt, pt510, vds, coverage-module, or feature module.	Assigns automatic answering (line type) to the multi-appearance terminal. Assigns the feature buttons, the stroke count buttons, and the RELEASE key for the automatic answering mode. Defines terminal attributes such as set color, set mount, and equipment adjuncts.

CSM SCREENS — MASKS AUTOMATIC CALL DISTRIBUTION (Contd)		
APPL'N	**OBJECT**	**PURPOSE**
TCM	console-messages	Administers the console message associated with either a trunk group or call type. These messages display on all attendant consoles on a switch. Each console message is also associated with either a message number or a CAS branch number. Instead of a CAS branch or a message number, the LDN, for the System 85 R2 V3 and V4, may be defined and associated with the alphanumeric message. LDN call types are defined as follows: • System 85 R2 V3 - 1 through 4 and 124 through 128 • System 85 R2 V4 - 1001 through 1999. Console message numbers 1 through 3 cannot be added to a System 85, R2 V1, R2 V2, or V3, because they are preassigned. System 85 R2 V4 — If Tenant Services is active, an LDN in an attendant partition may be associated with a console message. If Call Vectoring is active, a Vector Directory Number may **not** be associated with a console message.
TCM/FM	sys-cos	Assigns abandon call search, answer supervision, and CMS for ACD to the system class of service and enables the DCIU link or channels.
TCM/FM	first-digit	Administers the first dialed digit in the dialing plan.
TCM/FM	dial-access-codes	Assigns the ACD feature dial access codes. (System 85 R2 V4) The dial access code can be up to four digits long. If Tenant Services is present, the dial access codes to activate and deactivate Unattended Console Service must be assigned. If Call Vectoring is present, the following dial access codes should be disabled: Overload Balance All, Overload Balance Default, Overload Balance Cancel, and Overload Overflow. Codes are available to activate or deactivate Malicious Call Trace and call transfer to AUDIX.

CSM SCREENS — MASKS AUTOMATIC CALL DISTRIBUTION (Contd)		
APPL'N	**OBJECT**	**PURPOSE**
TCM/FM	acd-announcements	Administers the first and second delay announcement for the ACD feature. System 85 R2 V3, and V4 without Call Vectoring — Associates an ACD announcement ELL with a city-of-origin or ACD queue-of-origin. System 85 R2 V4 with Call Vectoring — Associates an existing ACD announcement number with a VDN. The association determines the announcement heard by agents when incoming calls are routed to a vector (through Call Vectoring) or an ACD split. This announcement informs agents of the source of the incoming call. Up to 84 announcements are assignable. All announcements can be verified by the split supervisor.
TCM/FM	cms-extension	Administers extensions associated with the CMS (Call Management System). Call activity for extensions administered with this command will be sent to CMS for use in generating reports. The CMS/MIS terminal number is assigned automatically when the extension is added.
FM	cms	Controls the link to the CMS feature so it can be activated or deactivated when necessary. **(Notification to the CMS administrator is necessary before using this command).**
TCM/FM	acd-status-lamps	System 85 R2 V3 and V4 only Administers lamps that display ACD group member status information. Lamps are identified by ELL and are associated with a column number on the 106B display unit and with a specific ACD member and group.
FM	trk-grp	Assigns the queuing trunk type and the announcement trunk type to a trunk group.
FM	term-trk-grps	Administers trunk-group termination to an ACD split. Assigns priority queuing and CMS measurement to the trunk group. System 85 R2 V3 and V4 only — Before specifying the CMS type, notify the CMS System Administrator.
FM	trk	Administers trunks and appropriate trunk attributes for new or existing ACD trunks.

CSM SCREENS — MASKS AUTOMATIC CALL DISTRIBUTION (Contd)		
APPL'N	**OBJECT**	**PURPOSE**
FM	trk-grp	Assigns the equipment locations of auxiliary trunks and incoming ACD trunks to their trunk group numbers. Administers the contact interface circuit for the queue warning indicators.
FM	dciu-link	Administers the status and attributes of DCIU links, which are logical channels for carrying messages between the DCIU and an external processor. (Attributes include the link assignment, destination, machine type and number, BX.25 level 2 and 3 protocol characteristics, local role, baud rate and link name.)
FM	dciu-channel	Assigns network channels to provide logical pathways for transmission on DCIU links. Also establishes the status assignment and priority level of the channel.
FM	dciu-route-codes	Administers alternate route codes assigned to specific destination routing codes. The codes are used to route message between the DCIU and adjunct processors, or another DCIU in a DCS network.

DCIU Administration

For a CMS system on an adjunct computer, refer to Appendix G of this manual for detailed information about DCIU administration. This information includes some recommendations for typical administration of the DCIU.

AUTOMATIC CALLBACK

DESCRIPTION

The Automatic Callback feature allows voice terminal users to call a busy extension number, go on-hook, and have their calls automatically placed by the switch when the called extension becomes idle. The switch monitors the busy/idle status of both extensions. When both extensions are idle, the calling terminal receives distinctive 3-burst ringing. When the calling terminal goes off-hook, the called terminal rings.

With Automatic Callback, the calling party doesn't waste time and effort by repeatedly calling a busy terminal. Communication is increased by reaching the busy terminal as soon as both terminals are idle and before the called party leaves the busy terminal.

Feature History and Development

This feature was first available on System 85 in Release 1. There have been no changes to this feature since its introduction.

USER OPERATIONS

The following are the user operating procedures for this feature.

To Activate Automatic Callback

With an AUTO CALLBACK button:

- Go off-hook on an idle appearance. [Dial tone]
- Dial the extension number of the called terminal. [If the called voice terminal is busy, busy tone is heard.]
- Press AUTO CALLBACK. [Confirmation tone is heard, and the AUTO CALLBACK lamp lights.]
- Go on-hook. [If the activating voice terminal is off-hook when the called voice terminal goes idle, the AUTO CALLBACK lamp flutters on the activating voice terminal.

  When both the calling and called voice terminals become idle the Automatic Callback sequence is initiated by the switch. (3-burst distinctive ringing is heard, and the AUTO CALLBACK lamp flutters on the activating terminal.)]
- Go off-hook on an idle appearance. [Ringback tone is heard, and the called terminal rings.]

- A 2-party connection is established when the called party goes off-hook.

Without an AUTO CALLBACK button:

- Go off-hook. [Dial tone]
- Dial the Automatic Callback access code. [Second dial tone]
- Dial the extension number of the called terminal.
- If the called voice terminal is busy, confirmation tone is heard.
- If the called voice terminal is idle, ringback tone is returned to the calling voice terminal, and the called voice terminal rings. (Automatic Callback is not needed.)
- To activate automatic callback, go on-hook within 6 seconds.
- The called voice terminal goes on-hook. [The calling and called voice terminals are idle. Distinctive 3-burst ringing is heard at the activating terminal.]
- Go off-hook. [Ringback tone is heard, and the called voice terminal rings.]
- A 2-party connection is established when the called party goes off-hook.

To Cancel Automatic Callback

Without an Assigned Feature Button:

- Go off-hook. [Dial tone]
- Dial the deactivation access code. [Confirmation tone]
- Go on-hook.

With an Assigned Feature Button:

- Go off-hook. [Dial tone]
- Press AUTO CALLBACK. [Switch returns confirmation tone, and the AUTO CALLBACK lamp goes out.]
- Go on-hook.

CONSIDERATIONS

Switch Capacities

Any number of voice terminals can activate Automatic Callback toward other voice terminals in the local switch (or the DCS network).

Moreover, any number of voice terminals could activate Automatic Callback toward the *same* voice terminal.

However, *each* voice terminal can only have Automatic Callback activated toward one other voice terminal at a time. When Automatic Callback is already activated toward one voice terminal, a user can cancel this callback request and then activate Automatic Callback toward another voice terminal.

Intercept Tone

Intercept tone is returned when the calling party does not go on-hook within 6 seconds of receiving confirmation tone, the Automatic Callback feature is already in use and the access code is dialed again, or when the activating voice terminal tries to activate Automatic Callback with a call on hold.

Calls Outside the DCS

A caller cannot initiate Automatic Callback toward any voice terminal that is outside the DCS network.

Callback Time Out

The callback must complete within 20 to 40 minutes or the feature request is canceled. The user must then reinitiate the callback.

Automatic Callback to Multiappearance Voice Terminals

Automatic Callback can only be activated toward a busy extension. However, multiappearance terminals provide multiple appearances of the same extension. As such, the called multiappearance voice terminal user must be using every incoming (not originating only) appearance of the extension before the switch will return busy tone to the calling party. As a result, multiappearance terminals are not usually busy or are busy for relatively brief intervals. As a result, the Automatic Callback feature is seldom if ever needed when the called terminal is a multiappearance voice terminal.

Hard and Soft Processor Swaps

Automatic Callback activations are stored in a status portion of switch memory. Therefore, if a voice terminal user activates Automatic Callback and then a hard processor swap occurs, the switch will be unable to initiate the callback sequence.

If a hard swap occurs during a callback sequence, the callback will fail.

The Automatic Callback feature operates normally during a soft processor swap.

INTERACTIONS WITH OTHER FEATURES

The following System 85 features affect or are affected by the operation of this feature.

Attendant Call Waiting

Activation of Automatic Callback is denied if Attendant Call Waiting is activated toward the calling terminal line. Activation of Attendant Call Waiting is denied if a called single-appearance terminal has Automatic Callback active. Attendant Call Waiting is denied if all the lines of a multiappearance voice terminal are busy.

ACD (Automatic Call Distribution)

Automatic Callback can be activated toward the individual extension number of an ACD agent. However, when this is done toward an agent in a busy split (i.e., calls are waiting in queue), a race condition occurs. The switch simultaneously begins the Automatic Callback sequence and the distribution of the next queued call when the agent goes on-hook. Since the ACD call-distribution algorithms are considerably faster, the agent will usually (if not always) receive the ACD call first.

Automatic Callback can also be activated toward an associated extension number of an ACD split. When this is done, the callback sequence is performed against the split supervisor's voice terminal. Again, if the split is busy and if the split supervisor is answering ACD calls, the same race condition occurs with the same results.

> **NOTE:** Automatic Callback is usually activated toward an agent to facilitate calling from within the organization, and is always more effective when activated toward single-appearance terminals. If ACD agents (using single-appearance terminals) need to receive intracompany calls, the race condition can be avoided by using the Priority Calling feature. However, the better solution would be to provide agents with multiappearance voice terminals equipped with either two or three appearances. In this way, an extra appearance is available for routine communication with other departments.

Busy Verification of Lines

While terminal B is on-hook waiting for terminal A to become idle after activating Automatic Callback toward terminal A, both terminals can be busy verified. But, when terminal A goes on-hook and the Automatic Callback process begins, neither terminal can be busy verified until the talking connection between terminals A and B has been established.

Call Coverage

After a voice terminal user with coverage active activates Automatic Callback toward another voice terminal, the 3-burst callback call is treated as a priority call and does not route to coverage.

Activation of Automatic Callback toward a terminal that has Cover Active, Cover Busy, or Cover All active is denied. Automatic Callback activation during the caller response interval of a coverage call is denied. Activation of Automatic Callback toward a principal that is off-hook with Cover Don't Answer active is allowed.

Call Forwarding—Busy and Don't Answer

Call Forwarding—Busy and Don't Answer has no effect on the calling party's use of Automatic Callback. Callback always directs to the originating terminal, not to the forwarded-to terminal.

Call Forwarding—Don't Answer

Call Forwarding—Don't Answer has no effect on an Automatic Callback call origination. Callbacks always direct to the originating terminal, not to the forwarded-to terminal.

Call Forwarding—Follow Me

Call Forwarding—Follow Me has no effect on the calling party's use of Automatic Callback. The callback always directs to the calling terminal, not to the forwarded-to terminal.

If this feature is active at the called terminal, the forwarded-to terminal is treated as the called terminal.

If this feature is activated at the called terminal after the Automatic Callback call is placed, the originally called terminal remains the called terminal for the Automatic Callback call.

Call Pickup

A Call Pickup group member cannot use the Call Pickup feature to answer an Automatic Callback call to the originating terminal.

Call Vectoring

The switch denies activation of Automatic Callback toward a VDN. When this is attempted, the switch returns intercept tone to the activating party.

Whenever a ''forced busy'' step in a vector returns busy tone to a calling party, the switch denies activation of Automatic Callback in response to the busy tone. When this activation is attempted, the switch returns intercept tone to the calling party.

Call Waiting

If a busy party has a call waiting and another party tries to call the busy party, the switch returns busy tone to the calling party. The calling party can now activate Automatic Callback toward the busy party. However, the callback sequence is delayed until there are no calls waiting.

If a calling party activates Automatic Callback toward a busy terminal and then becomes busy with another call, use of the Call Waiting feature by another party toward the calling party is still allowed.

If a party is waiting on a busy line, the busy party with the waiting call cannot place the active call on hold and then activate Automatic Callback toward another line.

DDC (Direct Department Calling)

Any individual DDC group member can use the Automatic Callback feature.

If Automatic Callback is activated toward a DDC group number, callback occurs only when the calling terminal and the DDC controlling terminal become idle.

Hold

Activation of Automatic Callback is allowed if the called terminal line has a party on hold. However, callback is not completed until after the held call is serviced.

Hunting

If Automatic Callback is activated toward a busy terminal line in a hunt group, the call does not complete until that specific terminal line is idle. The call does not hunt.

IPA (Interpartition Access)

A voice terminal user (in a partition other than Extension Partition 0) is allowed to activate Automatic Callback toward voice terminals in the same partition group or in Extension Partition 0.

When the user tries to activate Automatic Callback toward a voice terminal in any other partition group, the switch returns intercept treatment.

A voice terminal user in Extension Partition 0 is allowed to activate Automatic Callback toward any voice terminal in the switch.

Last Extension Dialed

Automatic Callback can be used in conjunction with Last Extension Dialed. This is useful when activation of the Automatic Callback feature toward the last extension dialed is desired. (Dial the Automatic Callback DAC or press the feature button before pressing the LXD feature button.)

Last Number Dialed

Automatic Callback can be used in conjunction with Last Number Dialed. This is useful when activation of the Automatic Callback feature toward the last number dialed is desired. (Dial the Automatic Callback DAC or press the feature button before pressing the LND feature button.)

Line Lockout

Automatic Callback can be activated toward a voice terminal in the lockout condition. When the voice terminal in the lockout condition goes on-hook, the callback process will begin.

Priority Calling

If a busy party has a priority call waiting and another party tries to call the busy party, the switch returns busy tone to the calling party. The calling party can now activate Automatic Callback toward the busy party. However, the callback sequence is delayed until there are no calls waiting.

If a calling party activates Automatic Callback toward a busy terminal and then becomes busy with another call, the switch does not allow application of the Priority Calling feature by another party toward the calling party.

Queuing

The Automatic Callback feature and ringback queuing, at the local switch, cannot be activated at the same time by a terminal.

Activation of the Automatic Callback feature towards a terminal line that has Queuing activated is allowed, but deferred, until either the Queuing process is resolved or the administered Queuing interval times out.

Remote Access

A remote access user cannot use the Automatic Callback feature. The switch has no way of placing a callback call to an off-net number.

Restriction—Attendant Control of Voice Terminals

If any of the Attendant Control of Voice Terminals restrictions are activated on either the calling or called lines after the Automatic Callback call origination (but prior to the start of the call completion sequence), the restrictions are ignored for the call.

Tenant Services

A voice terminal user (in a partition other than Extension Partition 0) is allowed to activate Automatic Callback toward voice terminals in the same partition or in Extension Partition 0. When the user tries to activate Automatic Callback toward a voice terminal in any other partition, the switch returns intercept treatment.

A voice terminal user in Extension Partition 0 is allowed to activate Automatic Callback toward any voice terminal in the switch.

UCD (Uniform Call Distribution)

Any individual UCD group member can use the Automatic Callback feature. If Automatic Callback is activated toward a UCD group number, callback occurs only when the calling terminal and the UCD controlling terminal become idle.

HARDWARE REQUIREMENTS

None.

FEATURE ADMINISTRATION

Assignment of the Automatic Callback feature is on a per-line class-of-service basis using the MAAP (Maintenance and Administration Panel). The customer can partially administer this feature using the SMT (System Management Terminal) or the TCM (Terminal Change Management) feature. This feature can also be administered using CSM (Centralized System Management).

The following are the applicable MAAP and SMT procedures.

MAAP AND SMT PROCEDURES — AUTOMATIC CALLBACK			
PROCEDURE	**WORD**	**PURPOSE**	**SMT**
000	1	Assigns the voice terminal class of service to an extension number.	Yes
010	1	Assigns the Automatic Callback feature to a voice terminal class of service.	Yes
054	2	Assigns the Automatic Callback feature button to a multiappearance voice terminal. The applicable encode is: 6 Automatic Callback.	Yes
350	1	Assigns the first digit of the dial access codes for the Automatic Callback feature (if required).	No
350	2	Assigns the feature dial access codes. The applicable encodes are as follows: 9 Cancel Automatic Callback 19 Automatic Callback - Calling.	No

The following are the applicable TCM path names used with the AP 16.

TCM SCREENS — AUTOMATIC CALLBACK	
PATH NAME	**PURPOSE**
terminal-change class-of-service attributes	Assigns Automatic Callback to a voice terminal class of service.
terminal-change extensions attributes	Assigns the class of service to an extension number.
terminal-change terminal buttons	Assigns the Automatic Callback feature button to a multiappearance voice terminal.

The following are the applicable CSM Command Paths utilizing the **admin** area of TCM or FM.

CSM SCREENS — MASKS AUTOMATIC CALLBACK		
APPL'N	**OBJECT**	**PURPOSE**
TCM	extension	Assigns the voice terminal class of service to an extension number.
TCM	class-of-service	Defines the Automatic Callback feature to a voice terminal class of service.
TCM	The object will be the set type: i.e., 36-button, 12-button, bct, vds, feature-module, or data-module.	Assigns the Automatic Callback feature button to a multiappearance voice terminal.
TCM/FM	first-digit	Assigns the first digit of the dial access codes for the Automatic Callback feature (if required).
TCM/FM	dial-access-code	Assigns the feature dial access code for the Automatic Callback feature.

AUTOMATIC CIRCUIT ASSURANCE

DESCRIPTION

This feature provides a means of early detection of possible trunk problems. Early detection of problems can reduce out-of-service time and irritation caused by trunks not performing up to standards.

DETECTABLE FAULT CONDITIONS

Frequently, callers connected on a trunk with poor transmission characteristics will hang up and call again. This results in many **short hold time** calls for these trunks. Another common trunk failure is an inability to disconnect normally after the call (the trunk circuit remains open after both ends of the call have disconnected). This results in **long hold times** for these trunks.

The ACA (Automatic Circuit Assurance) feature can detect these problems by comparing trunk hold times to standards established by the user (long- and short-hold times). When a long duration call or a specified number of short duration calls is detected on a trunk, a designated attendant is automatically alerted by a switch-generated **referral call**. The attendant can then check the condition of suspect trunks by using the Trunk Verification—Attendant feature or take other action that may be appropriate.

THRESHOLD LIMITS

Different users will have different norms or average hold times depending on their type of business or calling activity. For example, an order taking operation will have a relatively short average call duration, say 2- to 3-minutes, while data calls (data terminals linked to central computers, etc.) will normally have very long average call times (several hours). For this reason, both the short- and long-hold time thresholds can be set separately for each monitored trunk group.

- The short call threshold can be set to any value between 0 and 160 seconds. This is the value that determines if a short call has occurred.
- The short call referral level can be set to any even value between 0 and 30. This is the number of short calls that will cause the switch to initiate a short call referral.
- The long call limit can be set to any value between 0 and 24 hours.

A typical short call threshold value for voice calls would be from 10 to 20 seconds; while for a data call, a duration of 160 seconds could be considered a short call. A typical long call threshold value for voice calls would be 1 to 2 hours; while for data calls, the duration might be 4 hours or more.

As an example, consider a trunk group that is usually used for voice traffic. The short call threshold for this trunk group is set to 10 seconds, and the short call referral level is set to 8. Given this arrangement, when a trunk within that trunk group experiences eight consecutive calls that are hung up within 10 seconds, the switch generates an ACA referral to the designated attendant console.

The ACA referral from the switch to the attendant appears like an incoming call with an identifying Attendant Display (e.g., ACAL).

Release 2, Version 4 Enhancement

For System 85, Release 2, Version 3, and earlier switches, ACA referral calls are sent either to a local attendant or CAS (Centralized Attendant Service) attendant. With System 85, Release 2, Version 4, another option is available. ACA referral calls can now be sent to a *central referral point* associated with a maintenance or service center, such as CSM (Centralized System Management) rather than a local or CAS attendant.

When an ACA referral is sent to the central referral point, specific trunk failure data is not included in the referral message. The referral call shows only that a possible trunk failure has occurred. To obtain trunk failure data, the central referral point polls the switch and accesses the ACA *audit trail record*. This record contains trunk data for the 32 most recent suspected failures. The audit trail record is stored at the switch where the possible failure was detected.

Feature History and Development

This feature was first available on System 85 in Release 1. In R2 V4, ACA referral calls can be sent to a central referral point. Otherwise, there are no other enhancements to the ACA feature since its introduction.

USER OPERATIONS

The following are the user operating procedures for this feature.

To Activate ACA:

- From an attendant console, press an idle loop button. [PA lamp goes out, and loop lamp lights.]
- Press START. [Dial tone]
- Dial the ACA Start access code. [Confirmation tone]
- Press RELEASE. [PA lamp lights.]

To Deactivate ACA:

- From an attendant console, press an idle loop button. [PA lamp goes out, and loop lamp lights.]
- Press START. [Dial tone]

- Dial the ACA Stop access code. [Confirmation tone]
- Press RELEASE. [PA lamp lights.]

To Identify a Possibly Defective Trunk:

- From the designated attendant console, press ANSWER.
- Press TRK ID. [Alphanumeric display shows the trunk-group access code.]
- Press TRK ID. [Alphanumeric display changes to show individual trunk number.]
- Press TRK ID. [Alphanumeric display changes to show original referral message.]
- Press RELEASE.
- Test the trunk and/or take other actions that may be appropriate.

CONSIDERATIONS

Designated Console

Only one attendant console can be designated to receive system-generated ACA referral calls, regardless of the number of attendant consoles that may be assigned to the switch.

Statistical Probability of Error

Due to the statistical nature of the operation of the ACA feature, the switch will occasionally alert the attendant to check a good circuit. It must be understood that an occasional long call or series of short calls will occur as a matter of chance and trigger an ACA referral. An ACA referral call does not confirm a problem, but merely suggests the possibility of a problem.

Data Calls

Data calls normally have longer holding times than voice calls. For the ACA feature to be most effective on a switch that carries a lot of data traffic, it is desirable to provide separate trunk groups for data calls and for voice calls. A different long- and short-hold time threshold can be set for each trunk group (Procedure 120, Word 1) based on the type of traffic it is expected to carry.

Maintenance Alarms and ACA Referrals

When ACA referrals are directed to a local or CAS attendant, maintenance alarms can be directed to a *separate* destination, such as RMATS. However, when a central ACA referral point (such as CSM) is used, maintenance alarms must be directed to the *same* destination.

Hard and Soft Processor Swaps

The short call threshold, the short call referral level, and the long call limit are stored in a translation portion of memory. Therefore, these parameters will endure a hard processor swap.

Attendant activations of ACA toward trunk groups are stored in a translation portion of switch memory. Therefore, these activations will endure a hard processor swap.

The contents of ACA referral messages are stored in a status portion of switch memory. Therefore, if a hard swap occurs while the designated attendant is reviewing a referral message, the unread part of the referral messages is lost.

If a hard swap occurs while the switch is placing a referral call to the designated attendant, the referral call fails.

The ACA feature operates normally during a soft processor swap.

INTERACTIONS WITH OTHER FEATURES

The following System 85 features affect or are affected by the operation of this feature.

Dedicated Switch Connections

The ACA feature ignores a long-holding time threshold exception when a Dedicated Switch Connection is involved in the call.

DCS (Distributed Communications System)

In a DCS environment with as many as 40 nodes, attendant consoles can be concentrated at one node. When an attendant at this node activates or deactivates the ACA feature, the feature is activated or deactivated for every switch in the DCS. In a DCS environment, the operation of ACA is similar to the operation in a non-DCS environment. However, the initial alphanumeric display to identify a faulty trunk is different. In addition to the usual information, the initial display shows dial access code of the tie trunk involved in the ACA referral call. In a DCS, trunk groups that require the use of the ACA feature across DCS nodes cannot have 4-digit dial access codes.

Tenant Services

An attendant in Attendant Partition 0 is allowed to activate or deactivate the Automatic Circuit Assurance feature. However, the switch will only direct ACA referral calls to the designated attendant console. The designated console must belong to Attendant Partition 0.

Attendants (in partitions other than Attendant Partition 0) are not allowed to activate ACA, deactivate ACA, or receive ACA referral calls.

Trunk Verification—Attendant

The Trunk Verification—Attendant feature is the principal tool used to follow up an ACA referral call. A distant trunk which has an ACA record associated will be updated.

Unattended Console Service—Preselected Call Routing

When the switch is in the Preselected Call Routing mode, partial ACA operation allows ACA trunk referrals to be recorded in the audit trail without sending referral calls to the attendant.

HARDWARE REQUIREMENTS

None.

FEATURE ADMINISTRATION

Assignment of the ACA feature is on a per-system and on a per-trunk group basis. The customer can partially administer this feature using the SMT (System Management Terminal) or the FM (Facilities Management) feature. The feature can also be administered using CSM (Centralized System Management).

The following are the applicable MAAP and SMT procedures.

MAAP AND SMT PROCEDURES — AUTOMATIC CIRCUIT ASSURANCE

PROCEDURE	WORD	PURPOSE	SMT
120	1	Administers the short call threshold, the long call limit, and the short call referral level for each trunk group.	Yes
203	1	Assigns the TRK ID button to the attendant console. The applicable encode is as follows: 28 TRK-ID Button.	No
204	1	Designates the desired alphanumeric displays for referrals to the designated attendant.	No
285	—	Assigns the ACA feature to the system class of service.	Yes
286	1	Administers the system-wide characteristics of ACA.	Yes
350	1	Assigns the first digit of dial access codes for the ACA feature (if required).	No
350	2	Assigns the feature dial access codes. The applicable encodes are as follows: 62 ACA - Start 63 ACA - Stop.	No

The following are the applicable FM path names used with the AP 16.

FM SCREENS — AUTOMATIC CIRCUIT ASSURANCE	
PATH NAME	**PURPOSE**
facilities-mgmt system-parameters aca-activation	Assigns the ACA feature to the system class of service and designates the attendant console to receive ACA referral calls.
facilities-mgmt trunk-groups aca-thresholds	Assigns the short call threshold, the long call limit, and the short call referral level to each trunk group.
facilities-mgmt trunk-groups maintenance-busy	Displays or prints a report of those trunks listed as ‘‘maintenance-busy.’’
facilities-mgmt traffic reporting report	Displays or prints the audit trail report (select the ACA referral option) of ACA referrals.

The following are the applicable CSM Command Paths utilizing the **admin** area of TCM or FM.

CSM SCREENS — MASKS AUTOMATIC CIRCUIT ASSURANCE		
APPL’N	**OBJECT**	**PURPOSE**
FM	trk-grp	Administers the short call threshold, the long call limit, and the short referral level for each trunk group.
TCM	control-keys	Assigns TRK ID button to the attendant console.
TCM	console-messages	Designates the desired alphanumeric displays for referrals to the designated attendant.
TCM/FM	sys-cos	Assigns the ACA feature to the system class of service.
FM	altfrl-ctrl	Administers the system-wide characteristics of ACA.
TCM/FM	first-digit	Assigns the first digit of dial access codes for the ACA feature (if required).
TCM/FM	dial-access-code	Assigns the feature dial access code.

AUTOMATIC IDENTIFICATION OF OUTWARD DIALING

DESCRIPTION

The AIOD (Automatic Identification of Outward Dialing) feature is used by both the telephone company and the customer to provide valuable information about outgoing calls. The AIOD feature identifies, translates, and transmits the calling party's extension number and trunk access code to the serving CO (Central Office), or either the CCSA (Common Control Switching Arrangement) or EPSCS (Enhanced Private Switched Communications Service) switching office. The CO, CCSA, or EPSCS switching office contains AMA (Automatic Message Accounting) equipment for recording this information for later billing.

The AIOD feature provides the customer, as well as the telephone company, with detailed toll-call information. This information helps the customer with cost allocation, traffic analysis, and the policing of toll calls. Call screening is possible because each toll-call record includes the calling extension number and the called (destination) telephone number. The duration of a call is part of the call record. This record assists in identifying calls that are made frequently and of excessively long duration. The time of day is recorded in each call record to assist in identifying any suspicious out-of-hours calls.

Other Call Record Features

Besides the AIOD feature, System 85 offers a variety of other CDR formats: SMDR (Station Message Detail Recording), CDRR (Call Detail Recording and Reporting), and Variable Format Call Detail Recording. These alternative formats allow the System 85 to independently record information about outgoing calls. (The CO records aren't needed.)

Feature History and Development

The AIOD feature was first available for System 85 in Release 1. During the Release 1 time frame, the AIOD circuitry was provided on two circuit packs. By the Release 2 time frame, this circuitry was compressed onto a single pack, the SN244. Otherwise, this feature has remained unchanged since its introduction.

Billing

The System 85 may be arranged for five types of individual AIOD billing numbers:

- *Individual Voice Terminal Billing* — Once the voice terminal has finished dialing the dial access code for an outward AIOD call, the extension number and trunk access code are sent to the CO, CCSA, or EPSCS switching office. If a bill is prepared for this call, the extension number is used.
- *Auxiliary Voice Terminal Billing* — After an auxiliary ANI (Automatic Number Identification) billing number has been assigned (MAAP adjustable) and the voice terminal(s) has finished dialing the trunk

access code for an outward AIOD call, the auxiliary extension number and trunk access code are sent. Toll calls placed using Remote Access trunks are treated identically (charged to the auxiliary voice terminal number). This function is useful for billing many voice terminals to a single extension number.

- *Auxiliary Trunk Billing* — After an auxiliary ANI billing number has been assigned and the voice terminal(s) has finished dialing the trunk access code for an outward AIOD call, the trunk access code and the auxiliary tie trunk number are sent. Toll call(s) placed by Remote Access users are charged to the auxiliary tie trunk number.
- *Attendant Billing* — An attendant with an assigned LDN can originate an outward AIOD call or complete an outward AIOD call that was originated by a voice terminal. After the attendant has finished dialing the dial access code for an outward AIOD call, the call is processed and billed to the LDN.
- *Failure Billing* — When an AIOD process is not completed due to a failure in the ANI function, the AIOD call is unidentified for billing purposes. For example, if an AIOD call is placed in queue and cannot be serviced, the identity of the call is unknown. The failure billing number associated with the trunk group over which the call is directed is recorded by the serving office, and the call is completed. The failure billing number is recorded on the AMA unit and is subsequently translated by the accounting center to the System 85 LDN.

USER OPERATIONS

The AIOD feature doesn't require special user actions. Once the feature is administered, its operation is completely automatic. When voice terminal users or attendants want to access a particular trunk group associated with AIOD, they just dial the trunk-group access code in the same manner as they would dial any other outgoing trunk group.

CONSIDERATIONS

Coordination With Serving Central Office

The serving CO must be equipped to receive ANI messages from the System 85.

Five-Digit Dialing

If an AIOD billing number contains five digits, the leading digit is truncated because the CO will only receive the four least significant digits of the billing number.

Hard and Soft Processor Swaps

During a hard processor swap, the ANI buffer is cleared and ANI messages are not sent to the serving CO. Incomplete messages can also be transmitted when a hard swap occurs.

The AIOD feature operates normally during a soft processor swap.

INTERACTIONS WITH OTHER FEATURES

Presently, AIOD has no interactions with other features.

HARDWARE REQUIREMENTS

The AIOD circuitry consists of a single circuit pack (SN244) on the System 85. The SN244 uses a single output channel to send the necessary information for billing by the CO. Additional output channels can be added to the SN244 so information can be sent to other COs.

FEATURE ADMINISTRATION

This feature is assigned on a per-system basis using the MAAP (Maintenance and Administration Panel). This feature can also be administered using CSM (Centralized System Management).

The applicable procedures are as follows.

MAAP AND SMT PROCEDURES AUTOMATIC IDENTIFICATION of OUTWARD DIALING			
PROCEDURE	**WORD**	**PURPOSE**	**SMT**
000	2	Assigns auxiliary billing to an extension number.	Yes
100	1	Assigns the trunk type to the ANI trunk group.	No
101	—	Assigns AIOD billing numbers to trunk groups (tie trunks only).	No
116	—	Assigns the AIOD equipment number to a CO trunk, a ECSA/APLT trunk, a Foreign Exchange trunk, a WATS trunk, and a Remote Access trunk.	No
150	—	Assigns the equipment location of the ANI circuit to its trunk-group number, and the AIOD equipment number to a CO trunk, a ECSA/APLT trunk, a Foreign Exchange trunk, a WATS trunk, and a Remote Access trunk.	No
204	1	Assigns a listed directory number to be handled by an attendant (R2 V3 and later).	No
275	1	Assigns AIOD ANI Timing Delay and Auxiliary ANI number to the system class of service.	Yes
352	—	Assigns listed directory number to be handled by an attendant (R2 V1 and V2).	No

The following are the applicable CSM Command Paths utilizing the **admin** area of TCM or FM.

CSM SCREENS — MASKS AUTOMATIC IDENTIFICATION of OUTWARD DIALING		
APPL'N	**OBJECT**	**PURPOSE**
TCM	extension	Administers the auxiliary automatic identification number (ANI) to an extension line number.
FM	trk-grp	Assigns the trunk type to the ANI trunk group, and assigns AIOD billing numbers to trunk groups (tie trunks only). Assigns the AIOD equipment number to a CO trunk, a CCSA/APLT trunk, a foreign exchange trunk, a WATS trunk, and remote access trunks. Assigns the equipment location of the ANI circuit to its trunk-group number, and assigns the Central Office AIOD equipment number to a CO, CCSA/APLT, foreign exchange, WATS, and remote access trunks.
TCM/FM	sys-cos	Assigns AIOD ANI delay timing and the Auxiliary ANI number.
TCM	listed-directory-number	System 85 R1 V3 — R2 V2 — Adds, changes or removes an LDN (Listed Directory Number). With AIOD, the LDN is the AIOD billing number used by the attendant.
TCM	console-messages	System 85 R2 V3 — R2 V4 — Adds, changes or removes an LDN (Listed Directory Number). With AIOD, the LDN is the AIOD billing number used by the attendant.

AUTOMATIC ROUTE SELECTION

DESCRIPTION

The ARS (Automatic Route Selection) feature provides alternate routing, also known as least cost routing, of public network calls. The ARS feature provides automatic selection from multiple routes for a call to reach its final destination. These routes are grouped into routing patterns. Routing patterns are ordered list of the trunk groups the switch can use to complete a particular call. Each ARS routing pattern has a first-choice trunk group and one or more alternate trunk groups arranged in order of preference.

First-Choice Trunk Group

Usually, the first-choice trunk group in an ARS pattern is the least expensive trunk facility for a given time-of-day and day-of-week, and each alternate route is increasingly more expensive. However, the first-choice route for a particular pattern can be selected on some criteria other than cost.

Available Trunk Types

An ARS routing pattern may contain any or all of the following trunk types:

- Local CO (Central Office) trunks
- FX (Foreign Exchange) CO trunks
- Tie trunks
- WATS (Wide Area Telecommunications Service) trunks.

FRL (Facilities Restriction Level)

General Operation

Each trunk group in an ARS routing pattern is assigned an FRL. Each originating facility (voice or data terminal, remote access trunk, etc.) also is assigned an FRL (the default FRL). When an ARS call is placed, the switch selects a routing pattern based on the first three digits (office or area code) of the dialed number. The switch compares the FRL of the call (the default FRL) to the FRL of the first-choice trunk group in the selected pattern. The call can only access a trunk group that has an FRL that is lower than or equal to the default FRL. If the call has access to the first-choice trunk group, the switch checks that trunk group for an available trunk. If all trunks are busy, the switch checks the next trunk group for accessibility and available trunks. The use of FRLs is discussed in more detail in the Facilities Restriction Level section of this manual.

Authorization Codes

If an ARS call fails to route because of insufficient FRL and a higher FRL would provide access to more trunk groups, the switch prompts (recall dial tone) the caller for an *Authorization Code*. Using the FRL associated with the authorization code, the switch makes another attempt to find an available trunk. Authorization codes are discussed in more detail in the Authorization Codes section of this manual.

Queuing

If the new FRL is still too low (or if no authorization code is given) and the first-choice trunk group provides *Queuing*, the switch tries to queue the call on that trunk group. The calls FRL (either the default FRL or the authorization code FRL) must allow access to the first-choice trunk group before the call can be queued.

The trunk group's queue length (number of calls allowed in queue) must also allow access to queuing. Once the call has entered the queue, the switch checks the first-choice trunk group every 2 seconds for an idle trunk. If no trunk becomes idle before the time-in-queue limit is exceeded, the switch makes a ''last try'' checking. Every accessible trunk group (as determined by the FRL) in the pattern is checked.

Pattern Queuing

The Pattern Queuing option is available on System 85 Release 2, Version 3 and later switches. This option allows any number of trunk groups in the pattern to be checked during the entire queuing process. The switch may check one trunk group (i.e., the first-choice trunk group, ignoring Pattern Queuing), check the first two trunk groups, etc. If Pattern Queuing indicates that three of ten trunk groups are to be checked, the switch still checks all ten during the ''last try.''

When a call is placed in queue, it queues on the first-choice trunk group and is restricted by that trunk group's queuing parameters (queue length, time-in-queue limit, etc.).

> **CAUTION**: Care must be exercised when setting the number of trunk groups to be included in Pattern Queuing. An increase in the number of trunk groups to be checked means an increase in processing time. If this added processing time does not produce a significant increase in calls served, queues could begin to overflow.

Destination Code

To place an ARS call, a terminal user dials the ARS access code (usually one digit but can be up to three digits) followed by a destination code (telephone number). The destination code has the form:

P - NPA - NXX - XXXX

P - Prefix digit (not always required)

NPA - Area Code (3-digit NPA [Numbering Plan Area])

NXX - Office Code (3-digits)

XXXX - Extension number (4 digits).

Calls to public network telephones within the local service area [also known as the HNPA (Home

Numbering Plan Area)] do not require an area code. This results in a 7-digit destination code.

PREFIX DIGITS

The switch examines the digit following the ARS access code to determine if a prefix digit is present. The prefix digit is either the digit ‘‘0’’ or ‘‘1.’’

The Prefix ‘‘0’’

- If the prefix digit ‘‘0’’ is dialed, the call routes to a local central office for operator assistance if no other digits are dialed within 4 seconds or for special processing (e.g., Calling Card Billing) if more digits are dialed.
- If the digits ‘‘00’’ are dialed, the call routes to the international operator for assistance if no other digits are dialed within 4 seconds.
- If the digits ‘‘011’’ are dialed followed by a destination code, the call is routed to international direct distance dialing.

The System 85 routes these prefix ‘‘0’’ calls over two specific patterns that are assigned in Procedure 311, Word 1.

When the digits ‘‘0’’ or ‘‘00’’ are dialed, the switch selects the ARS pattern corresponding to office code ‘‘000’’ (Field 1), and then outpulses the ‘‘0’’ digit(s) and any subsequent digits to the serving CO for further routing.

When the digits ‘‘011’’ are dialed, the switch selects the ARS pattern corresponding to office code ‘‘001’’ (Field 1), and then outpulses the digits ‘‘011’’ and the subsequent digits to the serving CO (or the serving toll office) for further routing.

The Prefix ‘‘1’’

Dialing the prefix digit ‘‘1’’ is optional and depends on the dial 1 requirements of the central office at the other end of the selected trunk group. The following dial 1 options are available:

1. The prefix digit ‘‘1’’ never has to be dialed, and the switch ignores the digit if it is dialed. The switch adds the prefix digit if the central office at the other end of the selected trunk group needs it.
2. The prefix digit ‘‘1’’ must be dialed for all 10-digit (area code + office code + extension number) destination codes. Seven-digit destination codes do not require the prefix digit ‘‘1.’’ This option allows codes of the form N0/1X to be used as office codes when the prefix ‘‘1’’ is not dialed. If NXX (including N 0/1 X) are the first three dialed digits, this is an office code in the HNPA, and the switch collects four more digits. If 1 plus N0/1X is dialed, this is an area code, and the switch routes the call according to the next three digits dialed (the office code NXX).

Routing Codes

If the digit following the ARS access code is a number other than ‘‘0,’’ the switch examines the next three digits, excluding the prefix digit, to determine how many more digits to collect and how to route the call. These codes are one of the following:

- A service code
- An office code
- An area code.

Service Code

A service code has the form N11, 1N11, or 11X; where N equals any of the digits 2 through 9, and X equals any of the digits 0 through 9. One example of a service code is 1411, the number for local directory assistance.

Office Code or Area Code

To accommodate areas of the country where office codes and area codes have the same form, there are two ways to differentiate between these codes:

a. NNX is always an office code and N0/1X (0/1 stands for 0 or 1) is always an NPA;

or

b. N0/1X is an NPA only if the prefix ‘‘1’’ is dialed; otherwise, it is an office code of the form NXX.

The switch uses the NPA, service code, or office code as an index into software tables that contain information about the trunk groups in a routing pattern. If dialed digits are a service code or office code in the range 200 to 999, the switch uses these digits as an index into the HNPA (Home Numbering Plan Area) table. If the dialed digits are an NPA or a service code in the range 200 to 919, the switch checks the associated 3-digit table. This table points to either a routing pattern or an office code list (toll table). Toll tables are used with 6-digit routing.

6-Digit Routing

The most significant difference between 3-digit and 6-digit routing is that 6-digit routing offers more than one (as many as ten) route for a particular NPA. When an NPA’s 3-digit table points to a pattern, calls to the NPA route via that pattern only. The contents (i.e., the preferences) of the pattern can change by invoking a new ARS plan, however. For 6-digit routing, the dialed office code determines what ARS pattern the switch uses to route the call.

After the switch selects a route, it examines the route data associated with that route (trunk group). This route data supplies the following information.

- Trunk group number
- Minimum FRL to access trunks
- Warning tone (on or off)
- Terminating NPA of the trunk group (the area code of the destination switch)
- Dial-1 prefix requirements
- Toll table provided (yes or no), and if yes, which office codes are toll and which are local (toll free)

- Whether the destination switch has extensions numbered 0XXX, where X equals any digit 0 through 9
- Digit modification and outpulsing requirements for calls routed via the private network (10- to 7-digit conversion).

Access Codes

Two ARS access codes are available.

Toll Code

The toll code allows access to every trunk group in a routing pattern. When routing would occur over more expensive trunk facilities, the switch can provide a 1-second warning tone to the calling party. After hearing the tone, the caller can either let the call proceed or hang up and try again later when a less expensive facility is available.

Nontoll Code

The nontoll code allows access only to nontoll choices.

ARS Toll Restriction

The ARS toll restriction is a class-of-service restriction that can be used in conjunction with the ARS toll code. When ARS toll restriction is assigned to a caller's class of service, the caller is not allowed to place calls using the ARS toll code. After the toll code is dialed by a restricted caller, the switch denies the call with intercept treatment. (ARS toll restriction is assigned to a class of service by entering a ''1'' in Procedure 010, Word 3, Field 22.)

Time-of-Day Routing Plans

Public network long-distance toll charges vary from day-to-day and from hour-to-hour. To take advantage of these variations, the switch can automatically change the ARS routing plan as many as six times a day each day of the week. Three ARS time-of-day routing plans are available, and each plan can have up to 64 routing patterns. The main difference between one routing plan and another is the order of the trunk groups in the routing patterns. Typically, a routing plan optimizes call routing for a particular period of time. For example, plan one optimizes call routing during normal business hours, plan two optimizes call routing after business hours, and plan three optimizes call routing on weekends.

Clocked Manual Override

An override schedule can suspend the automatic plan-change times. The customer specifies the parameters for the override capability, called Clocked Manual Override, including: start time, stop time, and routing plan in effect. This override capability lets the customer take advantage of low holiday toll rates. When a holiday falls on a weekday, for instance, the switch can be preprogrammed to use the weekend routing plan rather than the plan normally used during business hours.

Manual Override

Another override capability, Manual Override, allows the attendant to change the routing plan from the attendant console. The manually selected routing plan remains in effect until the attendant selects another plan or cancels Manual Override.

10- to 7-Digit Conversion

Private Network Routing

An attribute of ARS, called 10- to 7-Digit Conversion, allows ARS calls to route partially or completely over private network trunks. When a user dials a 10-digit public network telephone number that is marked for conversion, the switch converts the number to a 7-digit private network telephone number and routes the call accordingly. The call's final destination may be on either the public network or the private network. If the call's destination is the public network, subnetwork trunking (refer to the AAR feature description) converts the number back to ten digits. Using the private network in this way can significantly reduce long distance telephone bills.

Unauthorized Call Control

The switch can also block certain calls, for example, 900 (DIAL-IT) numbers. Unauthorized Call Control lets the customer prohibit calls based on the first seven, eight, nine, or ten digits of the destination code. As a group, these numbers have an FRL, and therefore a caller using an originating facility with a high enough FRL can call numbers marked for call control.

IXC (Inter-Exchange Carrier) Access

ARS can provide equal access to any IXC (i.e., a vendor providing long-distance facilities). The customer can specify by route the particular IXC used for extending calls to given locations. Subnet trunking is used to modify the destination code as needed. Up to 20 digits can be inserted in front of the destination code to accommodate an IXC access code and authorization code.

Feature History and Development

The ARS feature was first available on System 85 in Release 1. In Release 2, Version 3, the following enhancements were added.

— There can be as many as 160 6-digit translators (up from 64 in R2,V1 and V2, and 32 in R1)

— Each 6-digit translator can have ten patterns (up from four)

— Each pattern can contain up to 16 preferences (up from 10)

— Pattern Queuing

— Subnetwork trunking was expanded to provide IXC Access.

- Seven digits can be deleted from the front of the destination code (no change).
- Twenty digits can be inserted in the place of the deleted digits (up from four).
- Inserted digits can be formed into four groups separated by pauses (up from two).
- A maximum of 15 digits can be included in a single group.

Flow Diagram

To help conceptualize this complex feature, a flow diagram describing the ARS feature is provided in Figure 21-1. This diagram does not show all of the decisions made in the ARS software. The diagram does, however, unify many of the different ARS functions.

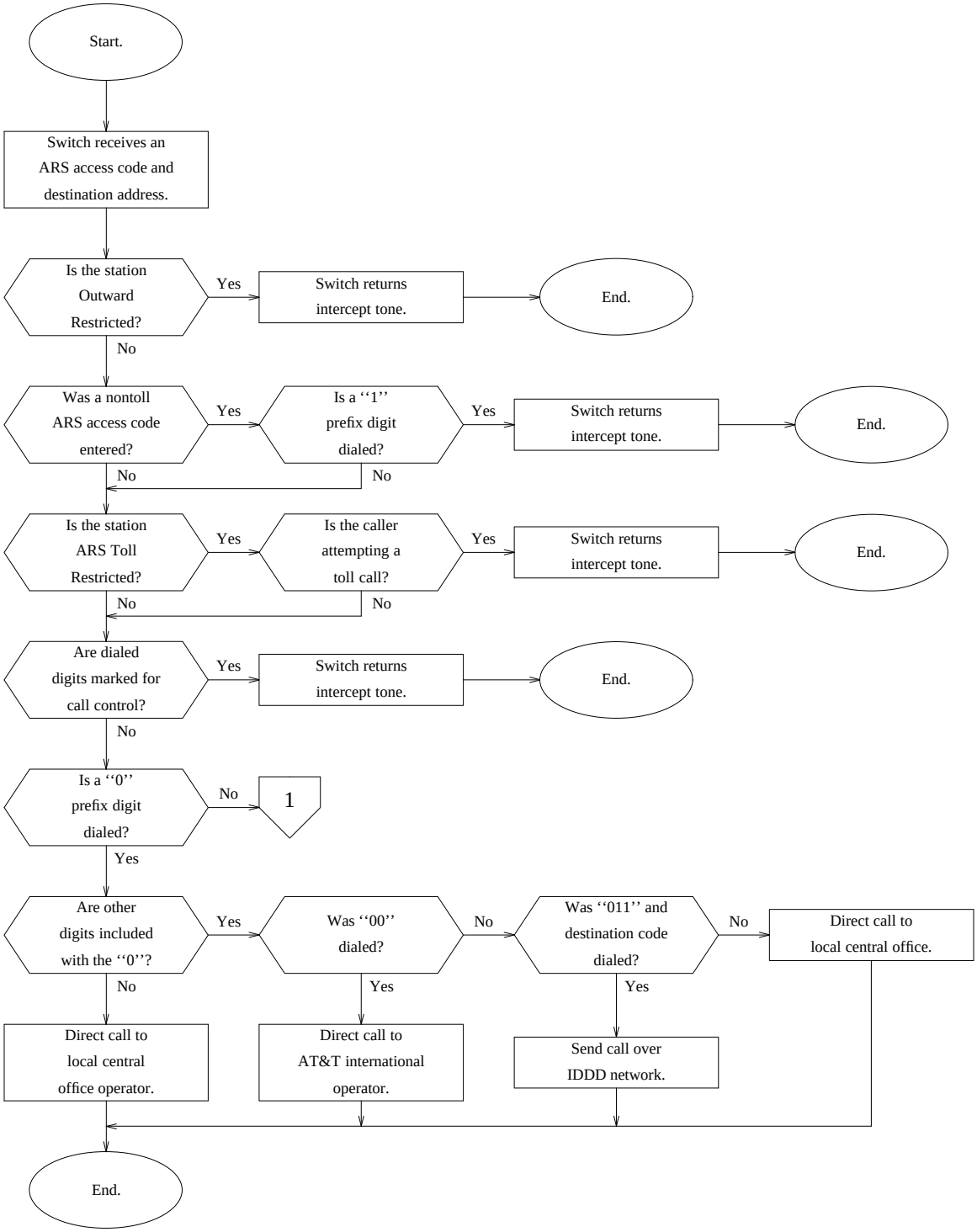

Figure 21-1. ARS Feature Flow

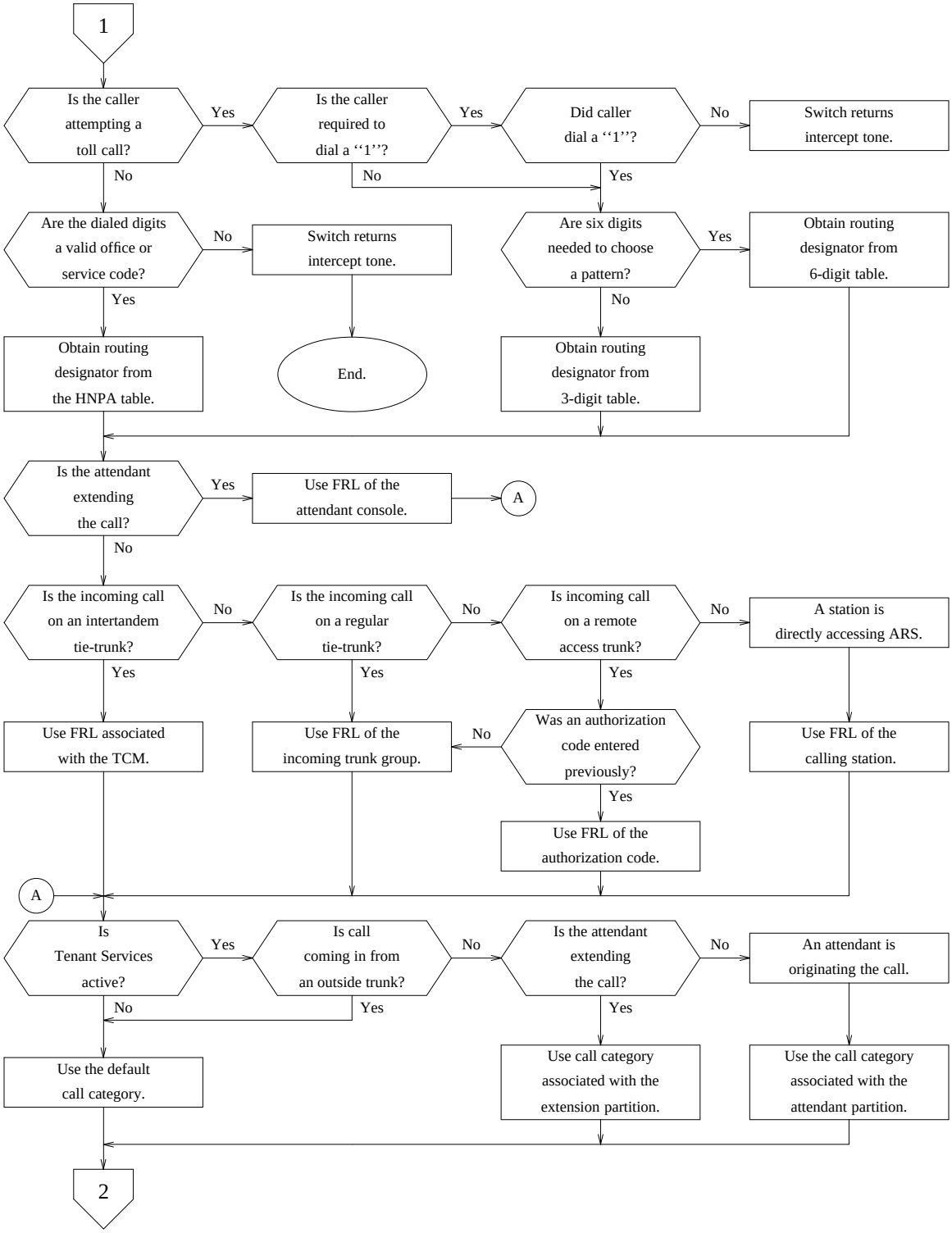

Figure 21-1. ARS Feature Flow (Sheet 2 of 4)

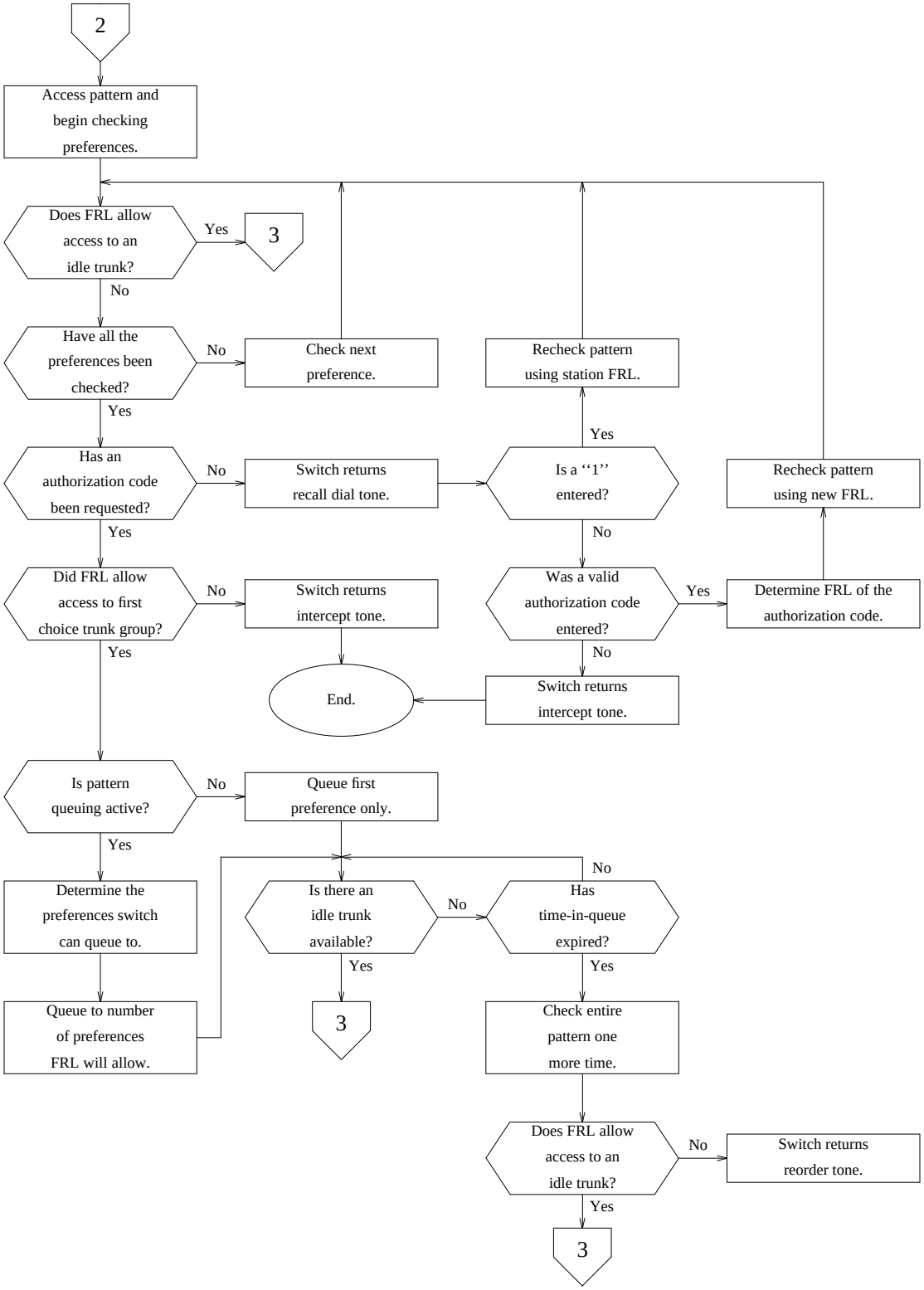

Figure 21-1. ARS Feature Flow (Sheet 3 of 4)

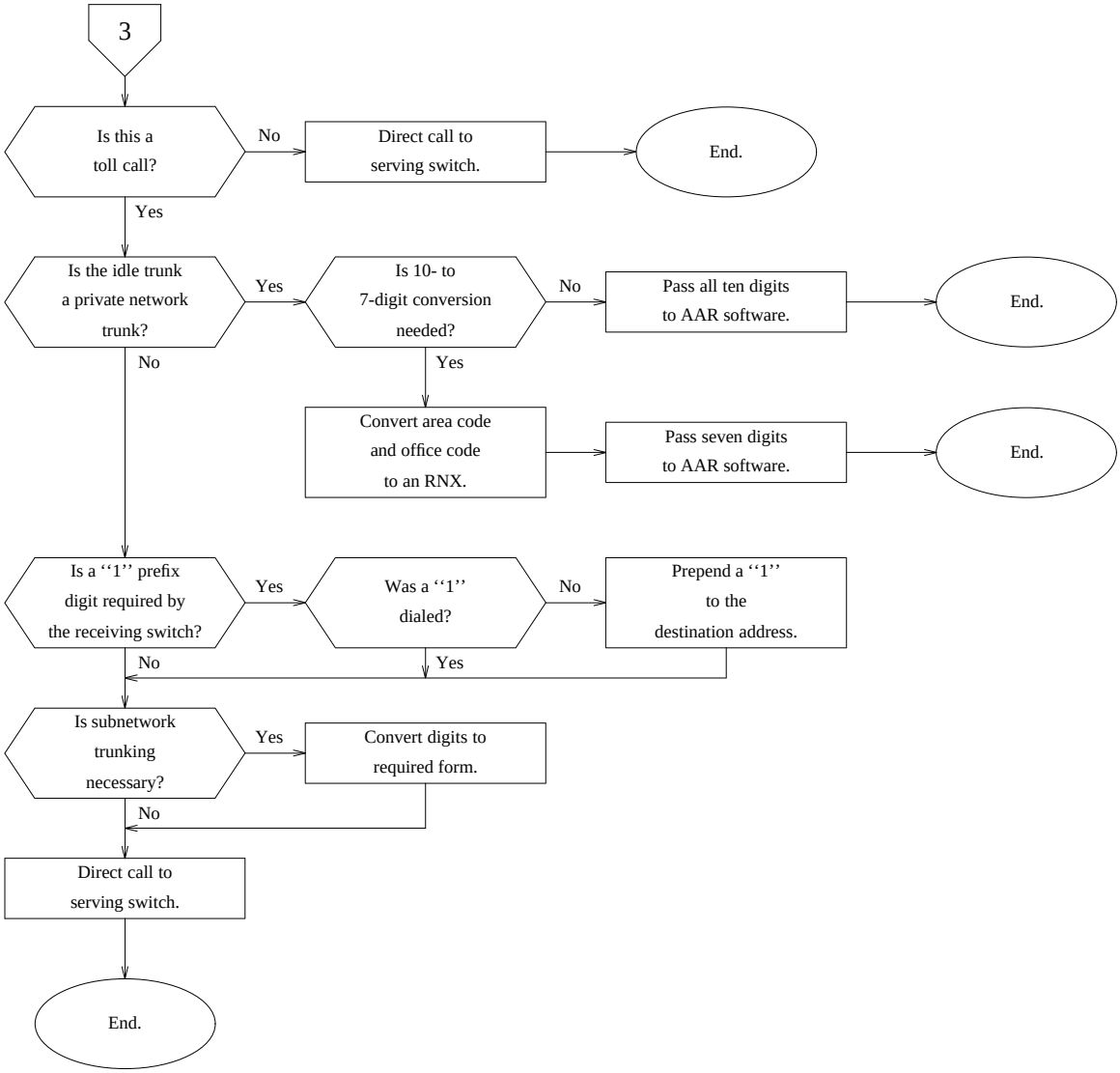

Figure 21-1. ARS Feature Flow (Sheet 4 of 4)

USER OPERATIONS

The ARS feature is fully automatic once administered. No user operations are required.

CONSIDERATIONS

FRL Access to ARS Routing Patterns

In Release 2, System 85, the caller's FRL need not be greater than or equal to the FRL of the first preference in an ARS pattern. The caller can access another preference in the pattern when a subsequent preference has an FRL that is less than or equal to the caller's FRL. (Therefore, the trunk groups in an ARS routing pattern need not be arranged with ascending FRLs.)

Hard and Soft Processor Swaps

The contents of the ARS routing plans are stored in a translation portion of switch memory. Therefore, if Routing Plan 3 is active when a hard processor swap occurs, the same routing plan is active after the hard swap is finished.

The contents of the ARS routing patterns are stored in a translation portion of switch memory. Therefore, these patterns will endure a hard processor swap.

ARS queues are stored in a status portion of memory. Therefore, if an ARS call is queued to a pattern when a hard swap occurs, the call is never routed to the public network. The queue is cleared.

Stable ARS calls will endure a hard processor swap. However, an ARS call cannot be placed during a hard swap.

The ARS feature operates normally during a soft processor swap.

INTERACTIONS WITH OTHER FEATURES

The following System 85 features affect or are affected by the operation of this feature.

Attendant Control of Trunk Group Access

The ACTGA feature takes precedence over ARS. A call directed by ARS to a controlled trunk group is routed to an attendant.

Bridged Call

The ARS Toll Restriction is assigned to a class of service in Procedure 010, Word 3. The class of service is then assigned to an extension in Procedure 000, Word 1. When ARS Toll Restriction is assigned to a *shared extension*, the restriction applies to every image of the extension.

Call Forwarding—Follow Me

When administering Call Forwarding—Off Net, all three ARS plans should be administered in Procedure 309, Word 1. Otherwise, when activating the Call Forwarding—Off Net feature, the ARS access code cannot be used as part of the destination's telephone number. Rather, the appropriate trunk-group dial access code would have to be dialed.

Also, when administering Call Forwarding—Off Net, the desired local office codes should be specified in the ARS Toll Table (Procedure 309, Word 2 and Procedure 309, Word 1, Field 9). Otherwise, when activating the Call Forwarding—Off Net feature, an office code that is not specifically assigned as *local* is presumed by the Call Forwarding—Off Net software to be a *toll* office code. And, since forwarding to the toll network is not provided, the switch would return intercept treatment.

Call Vectoring

In Procedure 010, Word 3, an FRL can be assigned to VDNs for use with the ''route to'' command. The FRL of a VDN is used to determine whether the call is allowed to route over available public network facilities.

The ARS Toll Restriction does not limit the routing of ''route to'' steps to destinations outside the switch. If ARS Toll restriction is assigned to a VDN's class of service, this assignment is ignored.

Data Call Setup

The ARS feature can be used to improve the routing of data calls as well as voice calls. However, as with the AAR feature, separate routing patterns must be used to prevent voice calls from terminating on data only extensions and vice versa.

ISN (Information Systems Network) Interface

Provided that Modem Pooling is available, ISN data stations can use the ARS feature when placing public-network calls through the System 85.

ISDN (Integrated Services Digital Network)/PRI (Primary Rate Interface)

Calls placed over ISDN facilities use the AAR or ARS features for ISDN access. To work effectively for ISDN, the **generalized route selection** version must be in effect. In this way, the placing of an ISDN call is transparent to the user. Factors involved in AAR and ARS pattern selection include calling party COS (class-of-service) and trunk bearer capability.

COS (Class-of-Service)

The AAR and ARS pattern searches work differently for ISDN calls based on the calling station COS. For ISDN, the calling parties COS specifies one of three options as follows:

ISDN Facilities Required

If ISDN facilities are required by a user's class of service, only ISDN end-to-end facilities are to be used for AAR or ARS routing. If ISDN end-to-end connections are not available, the call will either queue or receive reorder treatment.

ISDN Facilities Preferred

If ISDN facilities are preferred but not required by the COS, ISDN facilities are checked first, followed by a check for non-ISDN facilities.

Any Facilities Available

Any available facilities can be used to complete the call. In this case, AAR and ARS pattern searches work like they do for a non-ISDN call.

Bearer Capability

The bearer capability of an ISDN trunk (i.e., the type of call the trunk can support) is another factor used by the AAR/ARS pattern selection process in determining which trunk group to use for a particular ISDN call. For ISDN purposes, five types of bearer capability are recognized.

These five types of bearer capability include:

Bearer Code	Type of Traffic That Can Be Carried
0	Voice and voice-grade data allowed
1	Mode 1 data, 56 Kbps allowed
2	Mode 2 data, 64 Kbps allowed
3	Mode 3 data
4	Mode 0 data.

Last Number Dialed

Redial by the LND (Last Number Dialed) feature utilizes all of the ARS routing digits including IXC (Interexchange Carrier) Access as though the call were manually dialed. The LND feature will also store and redial the ARS access code.

For switch security, the LND feature does not store or redial Authorization Codes.

Precedence Calling

AUTOVON (Precedence Capable) trunk groups must not be included in ARS patterns.

Queuing

An incoming tie trunk that infers ARS routing cannot have ringback queuing.

Restriction—Miscellaneous Trunk Restrictions

The Miscellaneous Trunk Restrictions feature does not restrict access to trunk groups in an ARS routing pattern.

Tenant Services

Automatic Route Selection is a partitioned feature on System 85. In a partitioned switch, one or more extension partitions are assigned to one of 64 call categories in Procedure 320, Word 2. (Each extension partition can only be assigned to one call category.) In turn, each unique routing designator/call category pair maps to one of 64 ARS patterns in Procedure 314, Word 1. The result is that an ARS call can receive treatment by a different pattern depending on the partition's assigned call category. Further, once an ARS call enters the assigned pattern, the ARS call-processing software checks successive trunk groups in the pattern to determine whether the call is allowed to use the trunk group.

The three ARS time-of-day routing plans are a system-wide resource and are not partitioned. Using an unpartitioned System 85, any attendant is allowed to change the routing plan using Manual Override. For a partitioned System 85, an attendant in any partition can also change the system-wide routing plan.

> **NOTE:** For a partitioned System 85, it is recommended that the dial access code (Encode 60) be used to change the ARS routing plan, and that only the attendant(s) in Attendant Partition 0 is informed of the dial access code. If buttons were assigned to every attendant console, then the routing plan might be changed at undesirable times.

Touch-Tone Calling Senderized Operation

When the Automatic Route Selection feature uses subnetwork trunking, each call requires a touch-tone calling sender. If a sender is not available, the switch denies the call.

RESTRICTING FEATURE USE

Attendant controlled restrictions that deny access to ARS are the following:

- Controlled Outward Restriction
- Controlled Total Restriction.

Terminal restrictions that deny access to ARS are the following:

- Origination Restriction
- Outward Restriction
- Terminal-to-Terminal Only Calling.

A class-of-service restriction that limits access to ARS is the following:

- ARS Toll Restriction.

HARDWARE REQUIREMENTS

The ARS feature requires the following specific hardware items:

- SN252 Touch-Tone Calling Sender Circuit Pack

  Reduce call completion time.
- SN251 Touch-Tone Dialing Register/Receiver Circuit Pack.

  Reduce call completion time.
- TN492 Real-Time Clock Circuit.

FEATURE ADMINISTRATION

Assignment of the ARS feature is on a per-switch basis. The customer can partially administer this feature using the SMT (System Management Terminal), TCM (Terminal Change Management) feature, or FM (Facilities Management) feature. This feature can also be administered using CSM (Centralized System Management).

The following are the applicable MAAP and SMT procedures.

MAAP AND SMT PROCEDURES — AUTOMATIC ROUTE SELECTION			
PROCEDURE	**WORD**	**PURPOSE**	**SMT**
010	1,2,3,4	Assigns features and restrictions (including ARS toll restriction and miscellaneous trunk restriction groups) to a class of service for a voice terminal.	Yes
012	1,2,3	Assigns distinctive names to trunk groups.	Yes
100	1	Assigns a trunk dial access code and trunk type to a trunk group.	No
101	—	Administers the characteristics of trunks assigned to a trunk group.	No
102	—	Assigns trunk groups (via dial access code) to miscellaneous trunk restriction groups.	Yes
103	—	Administers network trunk group parameters including: minimum FRL, authorization code requirements, incoming tie trunk access to AAR and ARS, and the number of trunks that are reserved for first-choice AAR and ARS trunk groups.	Yes
150	—	Assigns trunks (via equipment location) to a trunk group.	No
175	—	Displays the trunk groups assigned to a miscellaneous trunk restriction group.	Yes
176	—	Displays the trunks assigned to a trunk group.	No
177	—	Displays the trunks assigned to a trunk group or trunk dial access code.	No
200	—	Administers attendant console features including: Direct Trunk Group Selection feature, class-of-service display, trunk test, and FRL for the consoles as a group.	No
202	—	Administers the Direct Trunk Group Select buttons (attendant console) and the BUSY/WARNING level for a trunk group(s).	No
203	—	Assigns the Display Route Plan button on the attendant console (manual override). The applicable encode is: 27 Display Route Plan.	No
253	—	Assigns an equipment location to the real-time clock circuit.	No
275	3	Defines dial 1 requirements for toll calls and assigns the HNPA (local area code) and an FRL to numbers assigned to the Unauthorized Call Control feature.	Yes
284	—	Sets the system clock [the switch uses this clock if the real-time clock circuit (TN492) is not provided]. This procedure also displays the presence or absence of the real-time clock circuit.	Yes

MAAP AND SMT PROCEDURES
AUTOMATIC ROUTE SELECTION (Contd)

PROCEDURE	WORD	PURPOSE	SMT
286	1	Administers the ARS plan in effect and the control mode (automatic, manual override, or clocked manual override).	Yes
287	—	Administers clocked manual override for the ARS plan.	Yes
309	1	Administers routing pattern parameters for ARS including: trunk group number, FRL, warning tone, home NPA at distant end of route, dial 1 for toll requirements, and toll table index. (To forward calls off-net, all three ARS plans must be defined using this procedure.)	Yes
309	2	Administers the ARS toll tables and defines the office code(s) at the distant end of an ARS route (see Procedure 309, Word 1) as either local or toll. (To forward calls off-net, the local office codes must be specified using this procedure.)	Yes
309	3	Defines the digit grouping, dialing format (touch-tone or rotary), and inserted digits a trunk group in an ARS pattern requires for subnetwork trunking.	Yes
311	1	Associates ARS pattern numbers with the local central office code(s) and service codes.	Yes
311	2	Associates an NPA (area code) with routing pattern numbers that point to 3- or 6-digit ARS route tables.	Yes
311	3	Associates a combined office code and NPA (6-digit translation) with an ARS pattern number.	Yes
312	1 & 2	Administers the 10-Digit Conversion feature.	Yes
313	1	Administers the Unauthorized Call Control feature.	Yes
316	—	Administers the ARS 7-day clock for automatic plan change times.	Yes
330	1	Assigns Pattern Queuing attribute.	Yes
350	1	Assigns the first digit of a trunk dial access code, a feature dial access code, or an extension number. The first digit is defined in terms of the number of digits the switch expects to receive and call type.	No
350	2	Assigns the ARS dial access codes. These access codes include: 32 ARS Nontoll Route 33 ARS Toll Route 60 Network ARS Plan Switch.	No

The following are the applicable TCM path names used with the AP 16.

TCM SCREENS — AUTOMATIC ROUTE SELECTION	
PATH NAME	**PURPOSE**
terminal-change class-of-service attributes	Assigns miscellaneous trunk restrictions to a line class-of-service. These restrictions include: Inward, Outward, Full, DID, and ARS toll. This screen also assigns an FRL to a line class-of-service.
terminal-change system parameters (select the Access-Codes option)	Assigns an authorization code for access to ARS routing patterns and the minimum FRL for numbers on the Unauthorized Call Control list.
terminal-change names trunk-group-names	Assigns distinctive names to trunk groups.

The following are the applicable FM path names used with the AP 16. A printed report of the displayed information can also be generated.

FM SCREENS — AUTOMATIC ROUTE SELECTION	
PATH NAME	**PURPOSE**
facilities-mgmt routing route-selection home-NPA	Display and change the ARS pattern assignments for the office codes within the home-NPA (free-calling area).
facilities-mgmt synchronization	Display and change (synchronize) the switch and Applications Processor clocks.
facilities-mgmt routing route-selection plan-change	Display and change the automatic and override schedules that determine which of the three ARS plans is in effect at any given time.
facilities-mgmt routing route-selection foreign-NPA	Display and change the ARS foreign-NPA routing for each of the three plans. When an NPA is entered, the routing information for each plan is displayed. If an NPA uses 6-digit routing, the allowed office code routing patterns are displayed.
facilities-mgmt routing route-selection office-codes	Display and change the pattern number-to-office code assignments for an NPA that uses 6-digit routing.
facilities-mgmt routing route-selection toll-table	Display and change the office codes that are considered toll. Enter a toll table number and a list of office codes, and the toll indication for each office code is displayed.
facilities-mgmt routing route-selection patterns	Display and change attributes associated with the trunk groups that make up an ARS pattern. Enter plan, pattern, and preference (a trunk group's position in a routing pattern, that is, first-, second-, third-choice, etc.) and the following information is displayed: trunk group number, minimum FRL, warning tone, send 1 for toll requirements, and toll table number.
facilities-mgmt routing route-selection rearrangement	Display and change the order of the trunk groups that make up an ARS pattern.
facilities-mgmt routing conversion	Display and change the correspondence between a private network location code and a public network destination code that routes to that location code (10-Digit Conversion). Either the location code or the public network destination code (telephone number) can be entered, and the corresponding values are displayed.
facilities-mgmt routing call-control	Display and change the Unauthorized Call Control list.

The following are the applicable CSM Command Paths utilizing the **admin** area of TCM or FM.

CSM SCREENS — MASKS AUTOMATIC ROUTE SELECTION		
APPL'N	**OBJECT**	**PURPOSE**
TCM	class-of-service	Assigns features and restrictions (including ARS toll restriction and miscellaneous trunk restriction groups) to a class of service for a voice terminal.
FM	trk-grp	Assigns distinctive names to trunk groups. Assigns a trunk dial access code and trunk type to a trunk group. Administers a trunk group by associating ten trunk members and defining features of the trunk group. Assigns AAR access and AAR prefix. Administers network trunk-group parameters including: minimum FRL, authorization code requirements, incoming tie trunk access to AAR and ARS, and the number of trunks that are reserved for first-choice AAR and ARS trunk groups. Assigns trunks (via equipment location) to a trunk group.
FM	misc-trk-rst-grp	Assigns trunk groups (via dial access code) to miscellaneous trunk restriction groups. Displays the trunk groups assigned to a miscellaneous trunk restriction group.
TCM	console-features	Assigns features to all attendant consoles on a switch. Administers attendant console features including: Direct Trunk Group Selection feature, class-of-service display, trunk test, and FRL for the consoles as a group.
TCM	direct-trk-grp-keys	Administers the Direct Trunk Group Select buttons (attendant console) and the BUSY/ WARNING level for a trunk group(s).
TCM	control-keys	Assigns the Display Route Plan button on the attendant console (manual override).
FM	clock	Synchronizes the switch clock with the CSM system clock. **This command changes only the switch clock**. It has no effect on the system clock, which can only be changed by the CSM System Administrator

CSM SCREENS — MASKS AUTOMATIC ROUTE SELECTION (Contd)		
APPL'N	**OBJECT**	**PURPOSE**
TCM/FM	sys-cos	Defines dial 1 requirements for toll calls and assigns the HNPA (local area code) and an FRL to numbers that are assigned to the Unauthorized Call Control feature.
FM	altfrl-ctrl	Activates or deactivates the use of Alternate FRLs on the switch. Once the Alternate FRL feature is activated on the switch, the attendant can put Alternate FRLs into effect from the attendant console.
FM/TCM	sys-cos	Administers the ARS plan in effect and the control mode.
FM	alt-frl	Changes the alternate FRLs associated with trunk group FRLs 0 through 7. One transaction can change the alternate FRL associated with one FRL, some FRLs, or all FRLs.
FM	ars-schedule	Defines and schedules time-of-day plans (automatic or manual override) for each day of the week or changes and displays the current schedule. The console attendant can also initiate manual override. This command also administers the ARS 7-day clock for automatic plan change times.
FM	ars-pattern	Administers an ARS pattern and the parameters associated with the pattern. The parameters include trunk-group number, FRL, warning tone, Toll Table Number, preference in the pattern, Distant Home NPA, Pattern No., and Dial 1 for Toll requirements. Defines the digit grouping, dialing format (touch-tone or rotary) and inserted or deleted digits for subnetwork trunking (if required in an ARS pattern).
FM	ars-toll	Identifies which calls to a specified office code are considered toll and which are considered local calls at the distant end. (Toll information can be obtained from the Local CO). A toll table may contain office codes for more than one area code. A toll table should be specified for each preference in an ARS pattern.

CSM SCREENS — MASKS AUTOMATIC ROUTE SELECTION (Contd)		
APPL'N	**OBJECT**	**PURPOSE**
FM	hnpa	Associates an ARS pattern number with the local central office code(s) and service codes.
FM	fnpa	Assigns an ARS pattern number used to route calls to a FNPA, a nonlocal code, in up to three time-of-day plans. Assigns ARS patterns to be used for 6-digit routing. Blocks call completion to an area code.
FM	ars-6-dig	Associates an ARS pattern to a 6-digit NPA/office code (area code/exchange) combination. Blocks calls to an NPA/office code combination.
FM	conversion	Administers the system's conversion list, which is used to convert a DDD number to a private network number, i.e., 10-digit Conversion feature.
FM	restriction	Administers the Unauthorized Call Control feature (blocks call completion to specific DDD numbers).
FM	trk-grp-queue	Assigns queuing and trunk queuing thresholds to a trunk group.
TCM/FM	first-digit	Adds or removes the first digit of a trunk dial access code or an extension number. The first digit is defined in terms of the number of digits the switch expects to receive and call type.
TCM/FM	dial-access-code	Adds, changes, and/or removes a DAC associated with a terminal feature or attendant console feature. System 85 R2 V4 — The dial access code can be up to four digits long.

AUTOMATIC TRANSMISSION MEASUREMENT SYSTEM

DESCRIPTION

The ATMS (Automatic Transmission Measurement System) feature allows the customer to measure transmission characteristics of private network and public network trunk facilities. The transmission characteristics that can be measured include: loss, noise, and echo impairments. The customer can make transmission measurements on demand or set up an automatic test schedule.

Transmission measurements are made by setting up a connection between an OTL (Originating Test Line) in the customer's System 85 switch (near-end switch) and a TTL (Terminating Test Line) in the far-end switch through the trunk to be tested.

Transmission measurements can be made to the following types of TTLs:

- 105-type TTL with return loss
- 105-type TTL without return loss (i.e., 56A miniresponder)
- High level tone source (i.e., LC-145)
- Low level tone source (i.e., SN-260B)
- 102-type TTL
- 100-type TTL.

The following is a list of all the transmission measurements a System 85 OTL can make. The measurements the OTL makes depend on the type of TTL that terminates the connection and may be a subset of this list.

- Two-way loss at 404, 1004, and 2804 Hz at a level of -16 dBm
- Two-way loss at 1004 Hz at a level of 0 dBm
- Two-way C-message weighted noise
- Two-way C-notched noise
- Two-way singing return loss — low frequency
- Two-way singing return loss — high frequency
- Two-way echo return loss.

Feature History and Development

The ATMS feature was first available on Release 2, Version 2 of System 85.

USER OPERATIONS

The primary customer interface to the ATMS feature is through the Facilities Management application of the AP (Applications Processor) 16 for System 85, Release 2, Version 3 and earlier switches. For Release 2, Version 4 of System 85, the primary customer interface to the ATMS feature is through CSM (Centralized System Management). Information on user operations for these applications can be found in the following guides.

Automatic Transmission Measurement System Administrator's Guide for the AP 16	585-201-704
Centralized System Management Terminal Change Management User's Guide	585-220-701
Centralized System Management Facilities Management User's Guide	585-220-702

INTERACTIONS WITH OTHER FEATURES

The following System 85 features affect or are affected by the operation of this feature.

Trunk Verification—Voice Terminal

The ATMS feature accesses the TVVT (Trunk Verification—Voice Terminal) feature to set up trunk test calls. Refer to the TVVT feature description in this reference manual for information about interactions between the TVVT feature and other System 85 features.

HARDWARE REQUIREMENTS

The ATMS feature requires an Analog/Digital Facility Test Circuit (ADFTC - SN261). The ADFTC can function as an OTL, a TTL, or both; however, it cannot simultaneously function as both an OTL and a TTL.

FEATURE ADMINISTRATION

The ATMS feature is assigned on a per-trunk group basis. The customer can (partially) administer this feature using the SMT (System Management Terminal) or the FM (Facilities Management) feature. The customer can also administer this feature using CSM (Centralized System Management).

The following are the applicable MAAP and SMT procedures.

MAAP AND SMT PROCEDURES AUTOMATIC TRANSMISSION MEASUREMENT SYSTEM			
PROCEDURE	**WORD**	**PURPOSE**	**SMT**
000	1	Assigns an extension number, equipment location, and class of service to an ADFTC circuit.	Yes
010	1	Defines the class of service for the ADFTC circuit as rotary dial (Field 15 = 0).	Yes
010	3	Assigns Data Protection—Permanent to a class of service.	Yes
051	1	Associates a terminal type (Field 6 = 8) with an equipment location.	Yes
052	1	Associates a device type (Field 6 = 4) with an equipment location.	Yes
070	1	Displays terminal information.	Yes
106	1	Displays information about trunks that are maintenance busy.	Yes
107	1	Assigns a test line type and TTL telephone number to a trunk group.	No
107	2	Assigns the types of transmission measurements to be made to a trunk group.	No
107	3	Assigns automatic testing parameters to a test schedule including: the days of the week tests will be made, starting hour, duration, and weeks between tests.	No
107	4	Assigns a trunk group to a test schedule.	No
107	5	Displays the trunk groups assigned to a test schedule.	No
107	6	Defines unacceptable transmission measurement thresholds and the maximum percentage of trunks that can be automatically made maintenance busy for a trunk group.	No
107	7	Defines the minimum number of trunks that must have failed the unacceptable transmission measurement thresholds twice before a minor alarm is raised.	No
290	1	Displays circuit status of assigned circuit packs.	Yes
350	2	Assign a dial access code for the Trunk Verification—Voice Terminal feature.	No

The following are the applicable TCM path names used with the AP 16.

TCM SCREENS AUTOMATIC TRANSMISSION MEASUREMENT SYSTEM	
PATH NAME	**PURPOSE**
terminal-change connection	Establishes or releases a connection from the AP to a switch in the private network.
terminal-change terminal equipment	Assigns an extension number to an ADFTC circuit.
terminal-change extension attributes	Assigns a class-of-service to an extension number.
terminal-change class-of-service attributes	Defines a class of service for the ADFTC circuit as rotary dial (TOUCH TONE = n) and assigns the Data Protection—Permanent feature.
terminal-change terminal extensions	Request an on-line listing or a hard copy report of the dial plan, assigned extensions, and/or unassigned extensions.
terminal-change terminal unassigned-equipment	Request an on-line listing or hard copy report of unassigned equipment locations.

The following are the applicable FM path names used with the AP 16.

FM SCREENS AUTOMATIC TRANSMISSION MEASUREMENT SYSTEM	
PATH NAME	**PURPOSE**
facilities-mgmt connection	Establishes or releases a connection from the AP to a switch in the private network.
facilities-mgmt transmission thresholds	Assigns the test line type and TTL telephone number and defines marginal and unacceptable transmission measurement thresholds for a trunk group.
facilities-mgmt transmission schedule	Assigns automatic testing parameters to a test schedule including: the days of the week tests will be made, starting hour, duration, and weeks between tests. Also assigns trunk groups to a test schedule.
facilities-mgmt transmission exec-summary	Requests an executive summary report. The report can be sorted by test schedule number, trunk group number, or test date.
facilities-mgmt transmission summary	Requests a summary report of trunk failures.
facilities-mgmt transmission details transmission	Displays detailed transmission data for trunk failures on a trunk-by-trunk basis. After viewing, entries can be saved or deleted.
facilities-mgmt transmission details miscellaneous	Displays reasons for trunk failures. After viewing, entries can be saved or deleted.
facilities-mgmt transmission demand supervision	Initiates a supervision test on a particular trunk.
facilities-mgmt transmission demand transmission	Initiates all possible transmission tests (determined by type of the TTL) on a particular trunk. After a trunk has been tested, the status of the trunk can be obtained and the trunk can be either made maintenance-busy or released from a maintenance-busy condition.

The following are the applicable CSM Command Paths utilizing the **admin** area of TCM or FM.

CSM SCREENS — MASKS AUTOMATIC TRANSMISSION MEASUREMENT SYSTEM		
APPL'N	**OBJECT**	**PURPOSE**
TCM	extension	Administers an extension line number, features, and attributes. Assigns an equipment location and a class of service to an ADFTC circuit.
TCM	class-of-service	Defines the features and/or restrictions assigned to a line class of service for the ADFTC circuit.
TCM	This command will be set type: i.e., 36-button, 12-button, bct, data-module, feature module, coverage module, or vds.	Administers and associates a terminal type and a device type with an equipment location.
FM	trk-grp-main-busy	Displays a list of all trunks that have been busied-out (both manually or automatically) for maintenance purposes. The list may be limited by entering a DAC or a trunk group number.
FM	atms-test-lines	Administers the terminating test line associated with trunks that are to be tested using the ATMS. ATMS testing is done by completing a circuit between an Originating Test Line over a trunk to a Terminating Test Line in a distant PBX, Central Office, or switch.
FM	test-circuit	Administers the Originating Test Line associated with trunks that are to be tested using the ATMS.
FM	atms-campon	Performs a camp-on transmission test that will wait until a trunk is free if it is in use when the test is initiated. The test shows the same information as an ATMS demand transmission test, and also shows the threshold information for the trunk to be tested. To perform the test, the user specifies a trunk group number or an equipment line location. If a trunk group number is specified, the user selects a trunk group number. (A camp-on test may take a long time to run, since it will wait for the trunk to be free).

CSM SCREENS — MASKS AUTOMATIC TRANSMISSION MEASUREMENT SYSTEM (Contd)		
APPL'N	**OBJECT**	**PURPOSE**
FM	atms-demand-supervision	Performs a supervision test to detect a Test Progress Tone on a specified trunk. The test results include status, test state, and fault code. (The test will not run if the trunk specified is in use).
FM	atms-demand-transmission	Performs all possible transmission tests on a specified trunk, then reports the results to the terminal screen. (The test will not run if the trunk specified is in use).
FM	atms-exceptions	This command collects or displays exception information resulting from trunk tests performed using the ATMS. Exception information includes all trunk or trunk group tests that exceeded testing thresholds.
FM	atms-misc-exceptions	This command collects or displays miscellaneous information resulting from trunk tests performed using the ATMS. (Miscellaneous exceptions are all trunk or trunk group tests considered failed for reasons other than not meeting threshold requirements, i.e., the facility was busy when tested).
FM	atms-schedule	Administers scheduled trunk tests for the ATMS. Each schedule is assigned a number from 1 to 16, and has a set of up to 256 trunk groups associated with it, as well as a set of timing attributes to specify when testing should begin, the duration of the test, and which days testing will occur. The user can assign timing attributes to all 16 testing schedules on one screen. Trunk groups must be assigned to testing schedules one schedule at a time. For each trunk, the user can specify which type of tests to run. (If a trunk is busy when a scheduled test is attempted, ATMS attempts one automatic reset).

CSM SCREENS — MASKS AUTOMATIC TRANSMISSION MEASUREMENT SYSTEM (Contd)		
APPL'N	**OBJECT**	**PURPOSE**
FM	atms-summary	This command collects or displays summary testing information resulting from trunk tests performed using the ATMS. For each trunk or trunk group tested, the display shows the schedule number, date of test, and which trunks failed or passed. For those trunks that could not be tested, the display shows which trunks are suspected causes of trouble. The summary display is useful for quickly identifying troubled trunk groups and identifying those trunk groups for which information is available.
FM	atms-thresholds	This command changes or displays testing thresholds for trunk tests performed using the ATMS. If these threshold values are exceeded when ATMS tests are performed, the tests are considered failed. The user can designate marginal and unacceptable thresholds for up to three trunk groups in one transaction. *Marginal thresholds* - identifies trunks that are out of a specified range. If a test fails a marginal threshold, results are stored in the switch data base as a failure. *Unacceptable thresholds* - allows more margin for error, and are used to identify trunks that are unusable and should be removed from service. If a test fails an unacceptable threshold, the failed trunk may be automatically removed from service. The user specifies the maximum percentage of trunks in a trunk group that can be automatically removed from service. The user can also specify the number of bad trunks allowed before a minor alarm is raised.

BRIDGED CALL

DESCRIPTION

The Bridged Call feature allows voice terminal users *sharing an appearance* to bridge onto an existing call on that appearance. A 2-party call becomes a 3-party call.

This feature is useful for monitoring a call, note taking, or consulting by a third party. Executives, secretaries, and consultants are potential users of this feature.

Shared Appearances

Shared appearances must be assigned to enable the Bridged Call feature. These shared appearances are comprised of more than one image (point of access to the appearance). In practice, a user who initiates a bridged call enters the active appearance using the image of the active appearance on the bridging user's voice terminal.

> **NOTE:** The terms ''image,'' ''appearance,'' and ''extension'' appear throughout this manual. Refer to Appendix E for a description of how these terms interrelate.

Feature History and Development

The Bridged Call feature was first available for System 85 in Release 1. In the earlier versions of System 85, single-appearance voice terminals were not allowed to participate in bridged connections between voice terminals. Beginning with Release 2, Version 2, Issue 1.2, one single-appearance voice terminal [administered as an SLS (straight line set)] was allowed to share an appearance with as many as 15 other multiappearance voice terminals.

USER OPERATIONS

The following are the user operating procedures for this feature.

With a Multiappearance Voice Terminal

To Bridge Onto an Existing Call:

- Press the busy appearance button. [Green status lamp is already lit. The associated red status lamp lights.]

- Go off-hook. [Bridged connection is made.]

To Exit From a Bridged Connection:

- Go on-hook, press another appearance button, or press the HOLD button.

With a Straight Line Set

To Bridge Onto an Existing Call:

- Go off-hook. [Bridged connection is made.]

To Exit From a Bridged Connection:

- Go on-hook.

CONSIDERATIONS

Feature Parameters

There can be as many as 16 images (shared appearances) of each appearance. For example, if an extension has 3 appearances, an image of each appearance can be assigned to as many as 16 different voice terminals.

There can be as many as 192 images of an extension (i.e., 12 appearances × 16 images per appearance).

Each set of up to 16 images (i.e., ‘‘appearance’’) may contain 1 image assigned to a straight line set.

Bridging With Straight Line Sets

A straight line set is a single-appearance voice terminal that *appears* to System 85 as a multiappearance voice terminal. Straight line sets possess *some*, but by no means all, of the capabilities of multiappearance voice terminals. The bridging provided by straight line sets is limited by the design of single-appearance terminals. Single-appearance terminals do not have status lamps to indicate the busy/idle status of their single appearance. As such, the user of a straight line set must:

- Go off-hook to determine the busy/idle status of the appearance.
- Wait until the shared appearance is idle to place a call.
- Choose between ringing, abbreviated ringing, delayed ringing, and the absence of ringing for the voice terminal. Visual alerting is not provided.

Bridging by Second Party

Only one bridged connection is allowed per appearance. When a third party attempts to bridge on to an appearance that has already been bridged, the third party receives reorder tone.

In a conference call (established via Conference—Three Party or Conference—Attendant Six Party), only one bridged connection is allowed per conferee. When a second bridged connection is attempted toward any conferee, the bridging party receives reorder tone.

Bridging Across Modules

Using a System 85, parties bridged onto a connection (involving voice terminals from three different modules) from a voice terminal on a fourth module is allowed.

Number of Dedicated Appearances

It is preferable, when assigning shared appearances of an extension number to multiappearance voice terminals, to assign the same number of appearances to each terminal. This practice would avoid access and status indication problems.

Hard and Soft Processor Swaps

If a voice terminal user is bridged onto a shared appearance when a hard processor swap occurs, this connection will endure the hard processor swap.

A voice terminal user cannot bridge onto a shared appearance during a hard processor swap.

The Bridged Call feature operates normally during a soft processor swap.

INTERACTIONS WITH OTHER FEATURES

The following System 85 features affect or are affected by the operation of this feature.

APLT (Advanced Private Line Termination)

The APLT Restriction is assigned to a class of service in Procedure 010, Word 3. The class of service is then assigned to an extension in Procedure 000, Word 1. When the APLT Restriction is assigned to a *shared extension*, the restriction applies to every image of the extension.

Attendant Call Waiting

Attendant Call Waiting is partially allowed toward shared extensions with only one appearance. When only the straight line set is active on this type of shared extension, the switch allows an attendant call to wait. However, when a multiappearance terminal is active on the shared extension, Attendant Call Waiting is denied. The switch returns busy tone.

While an attendant extended call is waiting on an SLS, a multiappearance voice terminal can be used to bridge onto the active call. However, the waiting call cannot be retrieved until the multiappearance voice terminal leaves the connection.

Attendant Call Waiting is denied toward shared extensions with more than one appearance. Instead, attendant calls are routed to an idle appearance (if available) of the shared extension. When every appearance is busy, the switch returns busy tone.

ARS (Automatic Route Selection)

The ARS Toll Restriction is assigned to a class of service in Procedure 010, Word 3. The class of service is then assigned to an extension in Procedure 000, Word 1. When ARS Toll Restriction is assigned to a *shared extension*, the restriction applies to every image of the extension.

Call Waiting

Call Waiting is partially allowed for shared extensions with only one appearance. When only the straight line set is active on this type of shared extension, the switch allows an incoming call to wait. However, when a multiappearance terminal is active on the shared extension, Call Waiting is denied. Busy tone is returned to the calling party. These attendant extended calls can also return to the attendant console via the Timed Reminder feature. Further, the attendant is allowed to *re-extend* the call for further waiting even though a multiappearance voice terminal is bridged to the connection. However, when a multiappearance voice terminal is bridged to the connection, the Attendant Call Waiting tone will not be repeated.

While a call is waiting on an SLS, a multiappearance voice terminal can be used to bridge onto the active call. However, the waiting call cannot be retrieved until the multiappearance voice terminal leaves the connection.

Call Waiting is denied to shared extensions with more than one appearance. Instead, incoming calls are routed to an idle appearance (if available) of this type of shared extension. When every appearance is busy, the switch returns busy tone to the calling party.

Conference—Attendant Six Party

For voice terminals with bridge-on capability, it is possible to have the bridged-on party involved in an attendant established conference though not actually connected to the conference circuit. However, transmission quality may degrade.

Conference—Three Party and Transfer

Bridging is allowed onto an appearance that is being held for conference.

For multiappearance voice terminals while bridging is active, the CONFERENCE and TRANSFER buttons are inoperable for both a controlling terminal (extension that originated the bridged call) and a bridged terminal. A user can bridge on after a conference is established.

For a straight line set while bridging is active, pressing the RECALL button (if provided) and momentarily pressing the switchhook are ineffective for both a controlling terminal and a bridged terminal. A user can bridge on after a conference is established.

Data Protection

Attempting to bridge onto a call that has Data Protection activated is denied. The switch returns reorder tone.

Data Protection—Permanent is assigned to a class of service in Procedure 010, Word 3. The class of service is then assigned to an extension in Procedure 000, Word 1. When Data Protection—Permanent is assigned to a *shared extension*, this protection applies to every image of the extension.

DID (Direct Inward Dialing)

The DID Restriction is assigned to a class of service in Procedure 010, Word 3. The class of service is then assigned to an extension in Procedure 000, Word 1. When the DID Restriction is assigned to a *shared extension*, the restriction applies to every image of the extension.

Extension Number Portability

Every image of an extension number must be removed before the extension number can be ported to another network node.

FRL (Facilities Restriction Level)

An FRL is assigned to a class of service in Procedure 010, Word 3. The class of service is then assigned to an extension in Procedure 000, Word 1. When an FRL is assigned to a *shared extension*, the calling privileges granted by the FRL apply to every image of the extension.

Hold

While an SLS has a call on ‘‘soft hold’’ (by pressing the RECALL button, or momentarily pressing the switchhook), bridging is not allowed for a multiappearance terminal sharing the appearance.

While an SLS has a call on ‘‘hard hold’’ (by dialing the Hold dial access code), bridging is allowed for a multiappearance voice terminal sharing the appearance. The bridging multiappearance voice terminal is added to the active connection. However, the call on hard hold cannot be retrieved until the bridged multiappearance terminal leaves the connection.

Intercom—Automatic

Bridging onto an existing Automatic Intercom call is allowed. A maximum of three multiappearance voice terminals may be connected to the call at any one time. Additional parties attempting to bridge onto the connection receive reorder tone.

Intercom—Dial

Bridging onto a Dial Intercom connection is not allowed.

Intercom—Manual

Bridging onto an existing Manual Intercom call is permitted. A maximum of three multiappearance voice terminals may be connected to a Manual Intercom call at any one time. Additional calls trying to bridge onto the call receive reorder tone.

Last Extension Dialed

The extension number that the Last Extension Dialed feature stores and redials is kept on a per-equipment location basis. Therefore, even though a voice terminal user shares an appearance with another user, the stored extension number cannot be overwritten by a user sharing the appearance.

Last Number Dialed

The dialed number that the Last Number Dialed feature stores and redials is kept on a per-equipment location basis. Therefore, even though a voice terminal user shares an appearance with another user, the stored number cannot be overwritten by a user sharing the appearance.

Override

The Override feature can be used toward a terminal that is in a normal talking state with another terminal, even if a third terminal is bridged onto the connection.

> **NOTE:** An override call to a straight line set enters the busy connection. An override call to a multiappearance voice terminal usually terminates to an idle appearance. However, if every appearance is busy, the override call enters the connection.

Priority Calling

Priority Calling is partially allowed toward shared extensions with only one appearance. When only the straight line set is active on this type of shared extension, the switch allows a Priority Call to wait. However, when a multiappearance terminal is active on the shared extension, the incoming Priority Call is denied. Busy tone is returned to the calling party.

While a priority call is waiting on an SLS, a multiappearance voice terminal can be used to bridge onto the active call. However, the waiting call cannot be retrieved until the multiappearance voice terminal leaves the connection.

Priority Calling is partially allowed toward shared extensions with more than one appearance. Incoming priority calls are routed to an idle appearance (if available), and 3-burst ringing is provided. When every appearance is busy, the switch returns busy tone to the calling party.

Privacy—Manual Exclusion

Bridging onto an appearance that has Manual Exclusion active is not allowed. The switch returns reorder tone to the party attempting to bridge.

If a party is already bridged onto a call when Manual Exclusion is activated, the switch removes the bridged party from the connection and returns reorder tone.

The Manual Exclusion feature, requiring an XCLUSION button, cannot be assigned to an SLS.

Restriction—Attendant Control of Voice Terminals

The Attendant Control of Voice Terminals feature allows an attendant to apply a restriction to an extension or a predefined group of extensions. When one of these restrictions is applied to a *shared extension*, the restriction applies to every image of the extension.

Restriction—Code Restriction

A Code Restriction level is assigned to a class of service in Procedure 010, Word 3. The class of service is then assigned to an extension in Procedure 000, Word 1. When a Code Restriction level is assigned to a *shared extension*, the level applies to every image of the extension.

Restriction—Miscellaneous Trunk Restrictions

Miscellaneous Trunk Restrictions are assigned to a class of service in Procedure 010, Word 3. The class of service is then assigned to an extension in Procedure 000, Word 1. When these restrictions are assigned to a *shared extension*, the restrictions apply to every image of the extension.

Restriction—Toll Restriction

Toll Restriction is assigned to a class of service in Procedure 010, Word 3. The class of service is then assigned to an extension in Procedure 000, Word 1. When Toll Restriction is assigned to a *shared extension*, the restriction applies to every image of the extension.

Restriction—Voice Terminal Restrictions

Voice Terminal Restrictions are assigned to a class of service in Procedure 010, Word 3. The class of service is then assigned to an extension in Procedure 000, Word 1. When one (or more) of these restrictions is assigned to a *shared extension*, the restriction applies to every image of the extension.

Serial Calls

Bridging is allowed for a shared appearance that is involved in a Serial Call.

Tenant Services

There are no tests in System 85 software to ensure that the images of an appearance (or that the appearances of an extension) do not cross partition boundaries. It is the responsibility of the system manager to ensure that every image of each extension resides only on voice terminals that are used by a particular extension partition.

HARDWARE REQUIREMENTS

Multiappearance voice terminals are primarily used for this feature. However, one single-appearance terminal can share an appearance with as many as 15 other multiappearance terminals.

Also, hard-wire bridging (connecting tip and ring leads together) of up to two single-line terminals is allowed using the SN228 and SN229 (previously, SN221 and SN222).

FEATURE ADMINISTRATION

The Bridged Call feature is provided whenever images (shared appearances) of an appearance are provided. The Bridged Call Feature is administered using the MAAP (Maintenance and Administration Panel). The customer can administer this feature using the SMT (System Management Terminal) or the TCM (Terminal Change Management) feature. This feature can also be administered using CSM (Centralized System Management).

The following are the applicable MAAP and SMT procedures.

MAAP AND SMT PROCEDURES — BRIDGED CALL

PROCEDURE	WORD	PURPOSE	SMT
051	1	Assigns a single-appearance voice terminal as type ‘‘SLS’’ for use in bridging.	Yes
052	1	Assigns images (shared appearances) of an appearance.	Yes

The following are the applicable TCM path names used with the AP 16.

TCM SCREENS — BRIDGED CALL

PATH NAME	PURPOSE
terminal-change terminal equipment	Assigns images (shared appearances) of an appearance. (The terminal type of a straight line set is ‘‘No-Button.’’)
terminal-change terminal line-pickup	Displays or prints a report of bridging Assignments.

The following is the applicable CSM Command Path utilizing the **admin** area of TCM or FM.

CSM SCREEN — MASK BRIDGED CALL		
APPL'N	**OBJECT**	**PURPOSE**
TCM	sls	Administers a single-appearance voice terminal as type ''SLS'' for use in bridging, and assigns images (shared appearances) of an appearance.

BUSY VERIFICATION OF LINES

DESCRIPTION

This feature allows the attendant to check the status of an apparently busy extension number. This check verifies that the called extension number is busy or appears busy. The extension number can appear busy when the terminal is left off-hook or is in need of maintenance. Being able to verify whether a line is really busy or not increases the efficient use of time and equipment.

Before allowing the attendant to connect onto a 2-way connection, the talking parties hear a burst of warning tone. This tone is reapplied at 15-second intervals as long as the attendant is on the connection. The first burst of tone lasts for 2 seconds. Thereafter, the duration is 1/2 second.

Feature History and Development

This feature was first available on System 85 in Release 1. There have been no changes to this feature since its introduction.

USER OPERATIONS

The following are the user operating procedures for this feature.

To Busy Verify a Line From an Attendant Console:

- Press an idle loop button. [PA lamp goes out, and ATND lamp lights.]
- Press VERFY. [VERFY lamp lights.]
- Press START, or press the DXS group selection button. [If START was pressed, dial tone is heard. If DXS group selection button was pressed, the group indicator lamp lights.]
- Dial the terminal's extension number, or press the DXS specific terminal line button.
- One of the following situations occur:

    a. The line is busy on a normal 2-party call. [A 2-second warning tone is heard by the attendant and both parties. The attendant is bridged on the talking connection and can hear and be heard by the talking parties. A 0.5-second warning tone is heard by all parties every 15 seconds as long as the attendant is on the line.]

b. The line is idle. (The busy verification request is canceled, and the call proceeds as a normal attendant-originated call to an idle voice terminal.) [VERFY lamp goes out, RING lamp lights, ringing is heard at the voice terminal, and the attendant hears ringback tone.]

c. The line is in an out-of-service state. (An out-of-service state is when the terminal has remained off-hook longer than 10 seconds without dialing, remained off-hook longer than 10 seconds between dialing digits, or remained off-hook longer than 10 seconds after the other party has gone on-hook.) [Attendant is connected directly to the line. ANS lamp lights, and VERFY lamp goes out.]

d. The line is in an unstable state. (See the Considerations section for unstable states.)

- When verification is finished, press RELEASE. [ATND and ANS lamps go out, and PA lamp lights.]
- One of the following situations occur:

a. The verified line was busy. [The VERFY lamp goes out.]

b. The verified line was idle. [RING lamp goes out, ringing stops at the called voice terminal, and ringback tone is removed from the attendant.]

CONSIDERATIONS

Reorder Tone

If reorder tone is heard, the VERFY lamp goes out and the attendant is unable to verify the line because it is in an unstable or transient condition. The attendant should wait a few seconds and try again to verify the line.

Intercept Tone

If intercept tone is heard, the VERFY lamp goes out and the attendant is unable to verify the line.

Busy Verification Not Recognized

If an attendant presses the VERFY button without first selecting an idle loop, the request for busy verification is not recognized.

Dual Use of VERFY Lamp

When the switch is equipped with both the Busy Verification of Lines and the Trunk Verification by Attendant features, the same VERFY button and lamp are used for both features.

Request to Verify Another Line

If the attendant receives a request from a voice terminal user to verify another line, the attendant must release the incoming call or place the incoming call on hold before verifying the other line.

Warning Tones

Both warning tones are 440-hertz.

Hard and Soft Processor Swaps

If an attendant is verifying a line when a hard processor swap occurs, this connection will endure the hard swap.

An attendant cannot verify a line during a hard processor swap.

The Busy Verification of Lines feature operates normally during a soft processor swap.

INTERACTIONS WITH OTHER FEATURES

The following System 85 features affect or are affected by the operation of this feature.

ACD (Automatic Call Distribution)

An attendant can use the Busy Verification of Lines feature to check the busy/idle condition of the terminals in an ACD split. The agent's terminals can be checked whether or not the terminals are available for split calls. If Busy Verification of Lines is activated toward an ACD associated extension number, only the split supervisor's line is verified.

Attendant Call Waiting

An attempt to verify a terminal line via the Busy Verification of Lines feature takes precedence over the Attendant Call Waiting feature.

Automatic Callback

While terminal B is on-hook waiting for terminal A to become idle after activating Automatic Callback toward terminal A, both terminals can be busy verified. But, when terminal A goes on-hook and the automatic callback process begins, neither terminal can be busy verified until the talking connection between terminals A and B has been established.

Call Coverage

If an attendant attempts to busy verify an extension classified as ''extension busy'' and ''extension active,'' verification is allowed. However, verification is not allowed if the Busy Verification call is to an extension where all appearances are on hold.

A busy verification call to a busy extension that has coverage does not redirect to coverage.

Call Forwarding—Busy and Don't Answer

Busy Verification is allowed toward a line, even if the line has Call Forwarding—Busy and Don't Answer activated.

Call Forwarding—Don't Answer

Busy verification is allowed toward a line even if the line has Call Forwarding—Don't Answer active.

Call Forwarding—Follow Me

Busy Verification is allowed toward a line, even if the line has Call Forwarding—Follow Me activated.

Call Park

A line that is in Call Park cannot be busy verified.

Call Vectoring

An attendant is not allowed to activate busy verification toward a VDN. When this is attempted, the switch returns intercept tone to the attendant.

Call Waiting

If an attendant attempts to busy verify a terminal line which already has a call waiting, busy verification proceeds normally. However, if the attendant attempts to busy verify a terminal line that is waiting for another line, the busy verification attempt is denied.

Conference—Attendant Six Party

Busy Verification of Lines is denied when attempted toward a conference call made by the Conference—Attendant Six Party feature.

Conference—Three Party

Busy Verification of Lines is denied when attempted toward a line connected to a Conference—Three Party call, unless the line appears on a multiappearance terminal with more than one appearance. In this case, the verification attempt routes to an idle appearance of the line, if any.

Data Protection

When Data Protection is active on the terminal line or active on the trunk to which the line connects, Busy Verification of Lines toward the protected line is denied.

DDC (Direct Department Calling)

An attendant can use the Busy Verification of Lines feature to check the busy/idle condition of the terminals in a DDC group. However, this feature cannot check for the line ‘‘made busy’’ to group calls. If Busy Verification of Lines is activated toward a DDC group number, only the controlling terminal line is verified.

EUCD (Enhanced Uniform Call Distribution)

An attendant can use the Busy Verification of Lines feature to check the busy/idle condition of the terminals in an EUCD split. The agent’s terminals can be checked whether or not the terminals are available for split calls. If Busy Verification of Lines is activated toward an EUCD associated extension number, only the split supervisor’s line is verified.

Hold

If terminal A has terminal B on hold, terminal A can be busy verified but terminal B cannot (unless the extension being verified has multiple appearances).

Hunting

Hunting is not performed when the Busy Verification of Lines feature is activated toward a terminal line in a hunting group.

Line Lockout

Busy Verification of a locked-out voice terminal makes an immediate talking connection to the locked-out terminal. No barge-in tone is heard. The ANS lamp lights at the console.

Loudspeaker Paging Access

Reorder tone is received when attempting to busy verify a terminal line that has accessed Loudspeaker Paging (making a page or waiting for answer-back).

Override

When busy verifying a called extension, the switch denies Override to that extension.

Privacy—Attendant Lockout

The attendant is prevented from busy verifying a terminal line that is connected to a loop held on the attendant console.

Privacy—Manual Exclusion

Activating Manual Exclusion on an extension does not prevent an attendant from busy verifying a line.

Priority Calling

A verification attempt made via the Busy Verification of Lines feature has precedence over a priority call on the same line. However, if an attendant attempts to busy verify a terminal line that is waiting for another line, the busy verification attempt is temporarily denied and routed to reorder tone.

Serial Calls

The switch denies Busy Verification of Lines toward a line involved in a serial call.

Tenant Services

An attendant (in a partition other than Attendant Partition 0) is allowed to verify any extension residing in Extension Partition 0 or residing in an extension partition that has been assigned to the attendant's partition. When the attendant tries to verify an extension in another partition, the switch returns intercept treatment to the attendant.

An attendant in Attendant Partition 0 is allowed to verify any extension in the switch.

Timed Recall on Outgoing Calls

The switch denies busy verification if the terminal line being verified is connected to a call which has already been switched to an attendant position by means of the Timed Recall feature. Busy verification is allowed on terminal-to-trunk calls that have not yet been switched to the attendant by this feature. The recall timing is suspended as long as the attendant remains bridged on the connection by busy verification and is resumed when the attendant releases.

UCD (Uniform Call Distribution)

An attendant can use the Busy Verification of Lines feature to check the busy/idle condition of the terminals in a UCD group. However, this feature cannot check for the line ‘‘made busy’’ to group calls. If Busy Verification of Lines is activated toward a UCD group number, only the controlling terminal line is verified.

RESTRICTING FEATURE USE

The Busy Verification of Lines feature can be denied toward terminal lines which have the Voice Terminal Restriction feature active for the assigned class of service.

HARDWARE REQUIREMENTS

None.

FEATURE ADMINISTRATION

Assignment of the Busy Verification of Lines feature is on a per-console basis. The Busy Verification of Lines feature is administered using the MAAP (Maintenance and Administration Panel). This feature can also be administered using CSM (Centralized System Management).

The following is the applicable MAAP procedure.

MAAP PROCEDURE — BUSY VERIFICATION OF LINES		
PROCEDURE	**WORD**	**PURPOSE**
203	1	Assigns the VERFY button to the attendant console(s). The applicable encode is as follows. 7 VERFY Button.

The following is the applicable CSM Command Path utilizing the **admin** area of TCM or FM.

CSM SCREEN — MASK BUSY VERIFICATION OF LINES		
APPL'N	**OBJECT**	**PURPOSE**
TCM	console-keys	Assigns the VERIFY button to the attendant console(s).

CALL COVERAGE

DESCRIPTION

General Usage

This feature provides alternate answering points for calls that might otherwise go unanswered. For a *principal* (user with Call Coverage active), Call Coverage provides automatic redirection of calls that meet specified conditions. Calls are redirected to a *coverage path*. The coverage path(s), don't answer interval, and coverage criteria (conditions) combine to make a *coverage group*. A coverage group is assigned to a principal. (The same coverage group can be assigned to more than one principal.)

The Coverage Path

A single coverage path can consist of up to three coverage points:

- The primary covering user
- A backup to the primary covering user
- Another individual or general group of pooled answering positions, such as a Message Center or an AUDIX, as a final covering point.

A coverage group can have a single or a dual coverage path.

Coverage Points

A coverage point can be:

- An individual voice terminal (covering user)
- Automatic coverage provided by the AUDIX system, or
- Coverage service provided by a group of voice terminals.

Both AUDIX and Message Center group coverage are provided by ACD (Automatic Call Distribution) splits (EUCD, UCD, or DDC in switches prior to Release 2, Version 3).

When highly interactive coverage is needed, the primary covering user should be someone (e.g., the secretary) who is aware of the principal's daily schedule and can determine the relative importance of calls to the principal. A group or pooled answering arrangement can provide general coverage. This type of coverage can provide such services as information on when the principal will return, record who called, and take messages from calling parties to the principal.

PRIORITY VERSUS NONPRIORITY CALLS

Priority calls (calls that terminate with 3-burst ringing) do not route to coverage. Nonpriority calls are redirected to coverage based on the assigned criteria. These criteria define the conditions under which nonpriority calls, directed to a principal's extension, are redirected to coverage.

Coverage Criteria

There are four specific coverage criteria or types of coverage. The criteria and conditions are:

A. *Cover Active*

When any appearance of an extension with cover active is busy, all nonpriority calls (of the specified type) to that extension are redirected to coverage. Cover Active can be assigned to a single-line voice terminal, a single-appearance extension, or extensions with multiple appearances.

B. *Cover Busy*

When a single-appearance extension has Cover-Busy assigned and that extension is busy, incoming nonpriority calls (of the specified type) redirect to coverage. These calls are treated the same as *Cover Active*. However, if there are multiple appearances of the extension and any of the appearances are idle (except origination only appearances), calls do not redirect to coverage. Incoming calls alert at an idle appearance. When every appearance of the extension is busy, nonpriority calls (of the specified type) redirect to coverage.

C. *Cover Don't Answer*

Calls to an extension assigned coverage alert at the principal's voice terminal for the Don't Answer Interval (from two to six ringing cycles). If unanswered during this interval, nonpriority calls (of the specified type) redirect to coverage.

D. *Cover All*

All nonpriority calls (of the specified type) directed to a principal immediately redirect to coverage. If Cover All is assigned to an extension, this criterion takes precedence over the other criteria.

These criteria can be applied separately to the following *specific types* of calls.

- Internal calls (calls originating within the switching system)
- External calls (i.e., attendant and trunk calls),

  or
- Both internal and external calls.

In this manner, specific types of nonpriority calls can be sent to coverage in different ways. For example, within a single coverage group, Cover Busy can apply to internal calls, Cover Active can apply to external calls, and Cover Don't Answer can apply to both internal and external calls.

Dual Coverage Paths

An extension can have up to two coverage paths. These dual coverage paths can provide separate coverage for different types of calls. For example, calls from within a DCS network can be routed to automatic coverage by the AUDIX system, while calls from the public network are routed to a Message Center agent. This use of dual coverage paths provides external callers, who are less likely to know how to deal with AUDIX, with personal and flexible interaction with agents, while providing internal callers with efficient and effective access to automatic coverage.

Another use of dual coverage paths is to cover calls according to separate criteria. For example, an executive can have one path that routes calls to the secretary and then to Message Center, and another path that routes calls directly to Message Center. Cover Active can be assigned to the first path, while Cover Don't Answer is assigned to the second path. If available, the secretary is instructed to pickup unanswered calls for the executive. In this way, when the executive is busy on a call, subsequent calls will route to the secretary and then to Message Center without ringing the executive's voice terminal. Meanwhile, unanswered calls can be quickly covered either by the secretary or a Message Center agent.

Call Coverage Functions

To satisfy specific Call Coverage needs, seven functions are available to voice terminal users:

A. Caller Response Interval

The caller response interval is an administrable period of time (from 2 to 10 seconds), beginning with a coverage tone, that allows the caller to make a choice of responses to a call that is being redirected to coverage. The response interval can be administered as 0 seconds. When this is done, the tone is given, but calls redirect to coverage immediately. The coverage tone is a single burst of tone that notifies the caller that the call is being redirected to cover. The Caller Response Interval and coverage tone do not apply to outside (trunk) calls or attendant-originated calls.

During the Caller Response Interval, the caller can elect one of the following options:

- Terminate the call by hanging up
- Activate Leave Word Calling
- Wait for the covering user to answer.

B. Consult/Return

This function allows the covering user to call the principal for private consultation whenever a principal's call is redirected to coverage. The calling party is placed on hold and a 2-party connection is established between the principal and covering user. At the principal's discretion, the covering user can add the calling party to the conversation, or can return the call to the principal.

Consult/Return calls are treated as priority calls that override coverage. Like other priority calls, Consult/Return calls can terminate to an originating (only) appearance.

C. Coverage Callback

This function allows covering users to leave a message for the principal to call back the calling party. This function is available only when the incoming call (call being directed to coverage) originated locally (within the same switching system). For external calls (incoming trunk calls including DCS calls originating on a different node), the Leave Word Calling feature can be used.

D. Send All Calls (Prior to R2 V4)

This function allows a principal or covering user to redirect calls to coverage for *one* extension or *all* extensions on a given voice terminal. This is essentially the same as *Cover All* except that it can be turned on and off as desired at the principal's terminal rather than having to be assigned in translation (see Feature Administration). Send All Calls can be activated at any time, including when a call is ringing or when the principal is active on a call. If activated when a call is ringing, the call immediately redirects to coverage.

Send All Calls can be used in association with the Consult function. In this way, a principal could send every call to coverage, but request to be notified when a specific call arrives.

E. Send All Calls (Beginning With R2 V4)

This function allows a principal or covering user to redirect calls to coverage for *one* extension, a *group* of extensions, or *all* extensions on a given voice terminal. This is essentially the same as *Cover All* except that it can be turned on and off as desired at the principal's terminal rather than having to be assigned in translation (see Feature Administration). Send All Calls can be activated at any time, including when a call is ringing or when the principal is active on a call. If activated when a call is ringing, the call immediately redirects to coverage.

Send All Calls can be used in association with the Consult function. In this way, a principal could send every call to coverage, but request to be notified when a specific call arrives.

a. Send All Calls Extension

In Release 2, Version 3, and earlier switches, only one Send All Calls button was available. This button activated the Send All Calls function for every extension appearing on a voice terminal. For example, a secretary's or assistant's voice terminal has an image of a supervisor's extension. When the secretary or assistant presses the Send All Calls button, Send All Calls is activated for both the secretary's extension and the supervisor's extension. Calls for the supervisor are sent to coverage as well as calls to the secretary. The supervisor may be available to answer calls and may not want calls sent to coverage. The enhanced Send All Calls Extension function allows the secretary to use the send all calls function without necessarily activating send all calls for the supervisor.

The new Send All Calls Extension button (SAC XXXX) allows calls to a specific extension to immediately redirect to coverage without impact on other extensions that appear on the same terminal. (XXXX represents the extension number; ''X'' stands for any number 0 through 9.)

Each extension on a multiappearance voice terminal can have a separate Send All Calls Extension button (SAC XXXX). Other terminals with *shared appearances* of the same extensions can have SAC XXXX buttons for the same extensions. Pressing the SAC XXXX button activates or deactivates Send All Calls for *every appearance of that extension* (including the shared appearances of that extension).

The feature lamp beside the SAC XXXX button lights when Send All Calls is active. This lamp also lights on all terminals with SAC Extension buttons for the same extension. These lamps go dark when Send All Calls is deactivated.

The same multiappearance voice terminal can have as many Send All Calls Extension buttons as there are individual extensions on the terminal.

If the voice terminal does not have a Send All Calls Extension button, Send All Calls can still be activated or deactivated by dialing the appropriate dial access code. The effect on shared appearances on other terminals is the same as if a SAC XXXX button had been used.

b. Send All Calls Group of Extensions

In R2 V4, the Send All Calls Group of Extensions (SAC GROUP) button activates the Send All Calls function for a ‘‘designated’’ group of extensions on a multiappearance voice terminal. The status of other extensions (not in the specifically designated SAC Group) remains unchanged.

A multiappearance terminal can have only one Send All Calls Group of Extensions (SAC GROUP) button.

To ‘‘designate’’ an extension as a member of a Send All Calls group, an *image of the first appearance* of the extension must appear on the terminal with the SAC GROUP button. If one appearance of the extension is assigned to the group, all other appearances (shared appearances) are also assigned to the group.

Pressing the SAC GROUP button activates or deactivates the Send All Calls function for the group and all individual extensions belonging to the group. Only the terminal assigned the SAC GROUP button can activate or deactivate Send All Calls for the group.

The green status lamp beside the SAC GROUP button lights when the button is pressed to activate Send All Calls. When the button is pressed again, Send All Calls deactivates, and the green lamp goes dark.

There is no dial access code to activate or deactivate send all calls on a group basis.

An *individual extension* in a send all calls group can also be assigned a Send All Calls Extension (SAC XXXX) button. This button can activate or deactivate Send All Calls for that specific extension. For example, if a secretary presses the SAC GROUP button to redirect all calls to coverage, a supervisor belonging to the group can deactivate Send All Calls by pressing his/her own Send All Calls Extension button. Calls to that specific extension are not then redirected to coverage (on a send all calls basis). This has no effect on the other members of the send all calls group. Their calls still redirect to coverage.

F. Temporary Bridged Appearance

This function allows a principal (with a multiappearance terminal or a straight line set) to bridge onto a coverage call by going off-hook on the appearance that has been redirected to coverage. However, the coverage point that answered the redirected call cannot be a coverage group (e.g., AUDIX or Message Center) for the Temporary Bridged Appearance function to work. Also, when a VDN (Vector Directory Number) is assigned as the final point in a coverage path, a principal's temporary bridged appearance is removed at the time that vector processing assumes control of a redirected call.

G. Implied Principal Addressing

This function returns the extension-number address of the principal to whom a coverage call was originally directed. This address is used for the Consult function and to deliver Coverage Callback and Leave Word Calling messages to the principal. For example, if Leave Word Calling is provided, messages can be left for the principal at any point in the coverage path.

H. Ring-Ping

For R2 V4, an optional ring-ping on immediately redirected calls (send all calls function) is a reminder to the principal that send all calls is active. This option is assigned on a line class-of-service basis rather than an individual terminal basis. The principal's terminal receives a quick burst of ringing (ring-ping) when a call is immediately redirected to coverage. This is an especially helpful reminder to the user that has Send All Calls active on a terminal that does not have feature lamps (e.g., single-appearance terminals). This is also useful for shared appearances where a different user can activate send all calls.

This tone is identical to the tone provided when Call Forwarding—Follow Me is active. Ring-ping is given when calls are redirected due to any of the following:

- Cover All
- Cover Active
- Cover Busy
- Send All Calls.

Ring-ping is provided on a line class-of-service basis. All voice terminals sharing the terminating appearance of the extension receive ring-ping except as follows:

- The terminal is an off-hook, single-appearance set.
- The terminal is an on-hook, single-appearance set that is an image of a multiappearance terminal that is off-hook.
- The terminal is already ringing.
- The terminal is administered not to ring (alert type = 0) for this extension.
- The Ringing—Cutoff feature is active on the terminal.

The ring-ping tone is an 0.1-second burst of ringing.

Use of the Display—Voice Terminal Feature

If an internal caller's voice terminal has a display capability, the caller receives a visual indication that the call has redirected to coverage. If the covering user's voice terminal has a display capability, the display identifies the called principal, the calling party, and the reason the call routed to coverage (see the Display—Voice Terminal feature).

Feature History and Development

The Call Coverage feature was first introduced in System 85 in Release 1, Version 3. Subsequent enhancements that effect this feature include the following:

- Introduction of the ''dual coverage paths'' functionality providing separate coverage for different types of calls. Dual coverage paths were first available in Release 2, Version 2.
- Introduction of the AT&T Personal Terminal 510D, and the 7407D IDT (Integrated Display Terminal) providing additional terminals with enhanced call coverage capabilities. The 510D was first available in Release 2, Version 2 with a retrofit capability to earlier versions. The 7407D was introduced with Release 2, Version 3.
- Enhancement of the Display—Voice Terminal feature to include scrolling capabilities improved the services available to covering users equipped with this type of terminal. Scrolling was first available in Release 2, Version 3.
- Improvement of the Send All Calls function with the introduction of two Send All Calls feature buttons:
  1. Send All Calls Extension button
  2. Send All Calls Group of Extensions button.

  Two Send All Calls buttons are first available in Release 2, Version 4.
- Addition of an optional ''Ring-Ping'' when calls are immediately redirected using Send All Calls. Ring-ping for Send All Calls is first available in Release 2, Version 4.

USER OPERATIONS

The following are user operations associated with the Call Coverage feature. Except for Send All Calls, these operations are performed by a covering user. The Send All Calls operations can be performed by either the covering user or the principal.

The Consult Function

To activate the Consult function from a multiappearance voice terminal:

- Press the TRANSFER (or CONFERENCE) button. [Dial tone] (Calling party is placed on hold.)
- Press the CONSULT button. [3-burst ringing at principal's extension] (Priority call is directed to principal.)
- Obtain handling instructions from the principal.

To establish a 3-way talking connection (principal, caller, and covering user):

- Press the CONFERENCE button. (Calling party is returned to the connection.)

To establish a 2-party connection between principal and calling party:

- Press the TRANSFER button. [Dial Tone] (Principal and calling party are connected.)

To drop the principal and return to the calling party:

— After a 3-way connection has been established:

- Press DROP.

— Before a 3-way connection is established:

- Press the held (incoming) appearance.

To Activate the Coverage Callback Function:

- Press the COVERAGE CALLBACK button.

To Establish a Leave Word Calling Message for the Principal to Call the Covering User:

- Press the LEAVE WORD CALLING button.

The Send All Calls Function (Prior to R2 V4)

To activate Send All Calls for all extensions on a principal's terminal:

- Press the SEND ALL CALLS button.

To deactivate Send All Calls for all extensions on a principal's terminal:

- Press the SEND ALL CALLS button.

To activate Send All Calls for a specific extension:

- Go off-hook on the selected extension. [Dial tone]
- Dial the Activate Send All Calls access code. [Confirmation tone]
- Go on-hook.

To deactivate Send All Calls for a specific extension:

- Go off-hook on the selected extension. [Dial tone]
- Dial the Cancel Send All Calls access code. [Confirmation tone]
- Go on-hook.

The Send All Calls Function (Beginning With R2 V4)

To activate Send All Calls for a single extension:

- Press the appropriate SAC XXXX button. [The lamp for the SAC XXXX button lights.]

  If the extension is part of a Send All Calls Group, activating Send All Calls for the group will not alter the state of the extension. That is, Send All Calls remains active for this extension.

or

- Go off-hook on the selected extension. [Dial tone]
- Dial the Activate Send All Calls access code. [Confirmation tone]
- Go on-hook.

To deactivate Send All Calls for a single extension:

- Press the appropriate SAC XXXX button. [The lamp for the SAC XXXX button goes dark.]

  If the extension is part of a Send All Calls Group and the SAC GROUP button is pressed to deactivate Send All Calls for a group, the state of this extension is not changed. That is, Send All Calls remains deactivated for this extension.

or

- Go off-hook on the selected extension. [Dial tone]
- Dial the Cancel Send All Calls access code. [Confirmation tone]
- Go on-hook.

To activate Send All Calls for a group of extensions:

- Press SAC GROUP. [The lamp for the SAC GROUP button lights, and all the assigned SAC XXXX feature button lamps of extensions included in the group light on the terminal. The lamps for the SAC XXXX buttons on all terminals with shared appearances of the extensions included in the group light.]

To deactivate Send All Calls for a group of extensions:

- Press SAC GROUP. [Lamp for the SAC GROUP button goes dark, and all the assigned SAC XXXX feature button lamps included in the group go dark. Lamps for the SAC XXXX buttons on all terminals with shared appearances of the extensions included in the group also go dark.]

To deactivate Send All Calls for a single extension in a group when Send All Calls is active for the group:

Option 1:

- Press the SAC XXXX button for the extension. [The lamp goes dark. Send All Calls has been deactivated for this extension.]

Option 2:

- Go off-hook at the desired extension. [Dial tone]
- Dial the SAC-Cancel dial access code.
- Go on-hook. [The lamp goes dark. Send All Calls has been deactivated for this extension.]

> **NOTE:** Pressing the SAC GROUP button to deactivate Send All Calls for the group, after deactivating Send All Calls for the extension (either option), does not change the status of the extension. That is, Send All Calls remains deactivated for the extension.

Message Retrieval and Display

To access principal's message file as a covering user:

- Press an inactive appearance button.
- Press COVER MSG RETRIEVAL. [Display shows WHOSE MESSAGES?]
- Dial principal's extension number (when display shows: MESSAGES FOR [Name]).
- Press NEXT MESSAGE.

To access principal's message file during call with principal:

- Press HOLD. [Principal placed on hold.]
- Press an idle appearance button. [Dial tone]
- Press COVER MSG RETRIEVAL. [Display shows WHOSE MESSAGES?]
- Dial principal's extension number.
- Press held appearance. [Principal returns to connection.]

To return call for principal to displayed message originator (Callers extension number has appeared in the message):

- Press TRANSFER. [Principal placed on hold; dial tone returned.]
- Press RETURN CALL. [Callback call is initiated.]
- Press TRANSFER. [Callback call and principal are connected.]

The Lock / Unlock Function

To lock the terminal (blocks message retrieval):

- Go off-hook on an inactive appearance. [Dial tone]
- Dial the LOCK access code. [Confirmation tone returned.]

This terminal cannot now be used to perform any Message Retrieval functions.

To unlock the terminal (return message retrieval):

- Go off-hook on an inactive appearance. [Dial tone]
- Dial the UNLOCK access code. [Confirmation tone returned.]

CONSIDERATIONS

Unavailable Terminals

A voice terminal in the coverage path is unavailable to receive coverage calls when one of the following conditions exists.

- The covering extension is busy (every appearance of the extension is in use on multiappearance voice terminals or off-hook on a single-line voice terminal).
- Call Forwarding, either Busy and Don't Answer or Follow Me, is active for the covering extension.
- Send All Calls is active for the covering extension or the entire covering user's voice terminal.
- The coverage point is in an out-of-service condition.

If Cover Don't Answer is active on an unattended voice terminal and the entire coverage path is unavailable, the call cannot redirect to coverage. The call continues ringing on the original called extension.

When the principal's voice terminal is busy and the entire coverage path is unavailable, the call cannot redirect to a covering user. In this case, the caller receives busy tone.

Soft Numbers for Covering Users

Sometimes, a covering user answers redirected calls for numerous (perhaps, as many as 25)

principals. In this situation, the covering user answers redirected calls using a voice terminal equipped with a coverage module. Generally, ‘‘soft numbers’’ are used to supply the identity of the originally called principal to the covering user.

The term ‘‘soft numbers’’ should not be misunderstood. These numbers are *real* extension numbers. They are part of the numbering plan, and consume some of the usable extension numbers within a System 85 switch. However, soft numbers for Call Coverage are typically assigned special characteristics. Usually, soft numbers have only one image of a single appearance. Each soft number is assigned to a principal’s coverage path. The image of the soft number is usually located on a coverage module, and the adjacent appearance button is usually labeled with the principal’s name (not the number). Ringing is usually (but not necessarily) assigned to the image of the soft number. Also, to prevent unauthorized calling activity from soft numbers, these numbers can be assigned to a common class of service that includes Origination Restriction or Outward Restriction.

Covering User Send All Calls (Button Activated)

Before R2 V4, if the covering user has an image of an appearance of the principal’s extension and activates Send All Calls using the SEND ALL CALLS button, the Send All Calls function is in effect for the principal’s extension as well as the covering user’s extension. This problem can be avoided by using the feature dial access code rather than the SEND ALL CALLS button.

Temporary Bridged Appearances and Single-Appearance Terminals

Normally, Temporary Bridged Appearances are not provided for single-appearance voice terminals. Therefore, by default, a principal with an analog voice terminal cannot bridge onto coverage calls. However, when a principal’s analog voice terminal is administered as a straight line set, the Temporary Bridged Appearance function is provided (except status-lamp operation).

The DCS (Distributed Communications System) Environment

In a DCS, the Caller Response Interval, Coverage Tone, and Coverage Callback are provided for calls between nodes (i.e., between System 85s in a DCS cluster) for calls that are redirected to coverage. An internode call that redirects to coverage does so according to the internal criteria assigned; that is, the criteria for an internal call is used. Also, the coverage points in a principal’s coverage path must be located in the same node as the principal.

Message Waiting Lamps

As many as 10,500 automatic message waiting lamps can be assigned to voice terminals within the switch.

Coverage Groups

As many as 3,047 separate coverage groups can be assigned to a switch. The first 1,999 groups are reserved as single-path groups, and the remaining 1,048 group pairs are reserved as dual-path groups.

A given coverage point can be assigned only once in a coverage path or group.

Dual Coverage Paths

Dual coverage paths are assigned using pairs of groups numbered from 2000 to 4095. Each dual path pattern is composed of two groups: an even numbered group and an odd numbered group. The first group in a dual path pattern must be assigned to the even numbered group, and the second path is assigned to the immediately following odd numbered group. This results in a total of 1,048 dual path patterns composed of 2,096 groups (two groups to a pattern).

When there is a conflict between criteria in dual coverage paths (e.g., both paths are assigned as

Cover Active for internal calls), the call will redirect according to the first (even-numbered) path.

Single Path Functionality

If necessary, coverage groups from 2,000 to 4,095 can be given single path functionality. This is done by assigning the same criteria and path for both the even group number and the corresponding odd group number.

Coverage Paths Without Criteria

It is permissible for no coverage criteria to be assigned to a single-path coverage group for an extension. If criteria are not assigned, the principal or covering user can activate Send All Calls to redirect calls to coverage.

It is also permissible to assign no criteria to a dual-path coverage group for an extension. When this is done, Send All Calls redirects internal calls according to the first coverage path, while redirecting external calls according to the second coverage path.

Attendant-Extended Calls

If an attendant originates or extends a call to a principal and that call redirects to coverage, the Temporary Bridged Appearance is not present on the principal's voice terminal.

Call Coverage cannot be assigned to an attendant position. Also, an individual attendant console cannot be assigned as a coverage point. However, with Call Vectoring, coverage calls can be redirected to the attendant group (queue). See Call Vectoring under **Interactions With Other Features** for further details.

Message Center and ACD Splits

Message Center or other ACD splits can be assigned as coverage points. However, only one split can be assigned to a coverage path, and it must be the last point in the path.

Parallel Coverage Points

Parallel coverage can be set up by hard-wire bridging a second voice terminal to a coverage point (extension). When a call redirects to coverage, both voice terminals alert (ring) simultaneously, and either covering user can answer the call.

Leave Word Calling

Leave Word Calling complements the Call Coverage feature by allowing the calling party to request a return call during or before the coverage process.

Lack of Coverage Path

If Send All Calls is activated for an extension but the extension does not have a coverage path assigned, calls to that extension are not routed to coverage. The appropriate lamps still light. The called party's terminal rings, and the calling party receives ringback tone.

Terminals With One Extension

For R2 V4, a terminal that has appearances of only one extension should be assigned a SAC XXXX button. A SAC GROUP button for a single extension wastes call-processing time by having to search for group members.

Terminals With Shared Appearances

For R2 V4, shared appearances (images) assigned on a voice terminal should not be included in a Send All Calls group. This is not recommended because a person with an image of the same appearance on another terminal may be available to answer calls and may not want Send All Calls activated. Therefore, the Send All Calls Extension feature button should be assigned to these extensions.

Hard and Soft Processor Swaps

The values of the coverage criteria and the extension in coverage paths are stored in a translation portion of switch memory. Therefore, these values and extension numbers will endure a hard processor swap.

Send All Calls activations are stored in a status portion of switch memory. Therefore, if a voice terminal user activates Send All Calls and then a hard swap occurs, Send All Calls will not be activated after the hard swap is finished. At this time, the user can reactivate Send All Calls.

If a principal is already bridged onto a redirected call using a temporary bridged appearance when a hard swap occurs, this connection will endure the hard swap. However, a temporary bridged appearance cannot be used to bridge onto a redirected call during a hard swap.

If a hard swap occurs while a call is redirecting to coverage, the redirected call fails.

The Call Coverage feature operates normally during a soft processor swap.

INTERACTIONS WITH OTHER FEATURES

The following System 85 features affect or are affected by the operation of this feature.

Attendant Display

After pressing the STA ID button, the attendant display indicates the extension number the call redirected to rather than the originally called extension number.

Attendant Release Loop Operation

When an attendant extends a call to a voice terminal with assigned coverage (with criteria that apply to the call) and releases the call, the call will not return to the attendant queue. Instead, the call will redirect to coverage according to the assigned coverage path.

For a call from an internal voice terminal extended by an attendant to another internal voice terminal, the call can redirect to coverage as an attendant call (i.e., external call). This occurs when the attendant does not release the call before the call type is checked for redirection to coverage.

ACD (Automatic Call Distribution)

An ACD split (including a Message Center split) can be assigned as the final point in a coverage path. However, the split number, rather than an associated extension number, is used to designate the coverage point. Therefore, all coverage calls that are redirected to an ACD split are placed in the nonpriority portion of the queue.

On an attendant-extended call to a principal with coverage assigned to an ACD split (including a Message Center split), the attendant receives coverage tone before the call is redirected to the ACD split. During the caller response interval, the attendant must release the call to allow the call to be queued. The attendant can release the call prior to the tone.

Automatic Callback

After a voice terminal user with coverage active activates Automatic Callback toward another voice terminal, the 3-burst callback call is treated as a priority call and does not route to coverage.

Activation of Automatic Callback toward a terminal that has Cover Active, Cover Busy, Cover All, or Send All Calls active is denied.

Activation of Automatic Callback toward a principal who is busy on a call with either Cover Don't Answer active or no coverage criteria assigned is allowed.

Activation of Automatic Callback during the caller response interval of a coverage call is denied.

Busy Verification of Lines

If an attendant attempts to busy verify an extension classified as ''extension busy'' and ''extension active,'' verification is allowed. However, verification is not allowed if the Busy Verification call is to an extension where all appearances are on hold.

A busy verification call to a busy extension that has coverage does not redirect to coverage.

CDRR (Call Detail Recording and Reporting)

Same as the CMDR interaction.

CMDR (Centralized Message Detail Recording)

The extension number of the covering user, rather than the principal, is recorded by CMDR, CDRR, or SMDR when a call is redirected and answered by a covering user.

If a covering user answers a redirected call on a soft number, the *primary extension number* of the covering user's voice terminal (not the soft number or the principal's number) is recorded in the call record.

Call Forwarding—Busy and Don't Answer

Call Forwarding—Busy and Don't Answer takes precedence over Call Coverage in the following situations.

— If any call forwarding is active for an extension that has coverage, calls to that extension redirect according to call forwarding.

— If a coverage point (other than a coverage group) has call forwarding active, the point is not eligible to receive a coverage call.

When a call is forwarded to a principal with coverage active, the forwarded call does not redirect to coverage. If the principal doesn't answer, the forwarded call rings until abandoned at the principal's voice terminal. For situations where cover active or cover busy would apply, the switch returns busy tone to the calling party.

Call Forwarding—Don't Answer

When a call is forwarded to a principal with coverage active, the forwarded call does not redirect to coverage. If the principal doesn't answer, the forwarded call rings until abandoned at the principals voice terminal. For situations where cover active or cover busy would apply, the switch returns busy tone to the calling party.

Call Forwarding—Follow Me

Same as Call Forwarding—Busy and Don't Answer. Also, if call forwarding is active for a group coverage point (ACD split), calls will cover to the split and then redirect according to call forwarding.

Call Park

When the Call Park feature is activated by a covering user, the Temporary Bridged Appearance at the principal's voice terminal is removed; and the principal is unable to bridge onto the parked call.

Call Pickup

Activation of the Call Pickup feature is denied when attempting to:

— Pickup a Temporary Bridged Appearance on a principal's voice terminal (that is, after the call has been redirected).

— Pickup a coverage call during Coverage Tone or during the Caller Response Interval.

If a member of the covering user's pickup group uses Call Pickup to pickup a redirected call, the temporary bridged appearance on the principal's voice terminal remains intact. After the redirected call is picked up,

the principal can still go off-hook on the temporary bridged appearance to join the call with the Call Pickup user.

Call Vectoring

A vector directory number can be assigned as the final point in a coverage path. When this is done, the full flexibility of the Call Vectoring feature can be applied to the redirected call. The corresponding vector could be programmed to queue the redirected call to an ACD split (including an AUDIX or a Message Center split). Furthermore, the vector's processing could also vary by time of day (to provide night service) or by the status of the split's queue (to provide intraflow or interflow).

A vector can have a ''route to'' step that routes calls to an extension with coverage assigned. When this is done, the destination extension's coverage is ignored.

Coverage to the Attendant Queue

Call Vectoring can redirect coverage calls to the attendant queue. Attendant coverage can be beneficial for some System 85s. Using this coverage, the attendant group can serve as the final coverage point for an assortment of principals.

A VDN can be assigned as the final point in a coverage path. One of these VDNs can be assigned to a vector with a single ''route to'' step. The ''route to'' step within this coverage vector contains an Abbreviated Dialing list item that outpulses the attendant dial access code [usually ''0,'' or a DID LDN (Listed Directory Number)].

Since ''route to'' steps can direct calls to DID LDNs, partitioned switches can also cover to the *shared* attendant queue. Each extension partition desiring attendant coverage can have a vector that directs calls to the LDN for the attendant partition assigned to that extension partition. In this way, attendant coverage is a partitioned function of the Tenant Services environment.

Call Waiting

When a principal has a single-line voice terminal with Call Waiting assigned, the call waits on the voice terminal if the principal has Coverage—Don't Answer active and the principal is busy. If any other type of coverage is active, the call goes to coverage normally.

Centralized Attendant Service

A backup terminal in a Centralized Attendant Service arrangement can be assigned as a point in a coverage path. This terminal can also have coverage assigned. When this terminal has coverage assigned, calls directly addressed to that extension redirect normally. However, incoming attendant seeking calls route to the backup terminal when coverage is active and do not redirect to coverage.

Conference—Three Party

The switch denies an attempt to activate a 3-party conference from a multiappearance voice terminal during the Caller Response interval of a coverage call. The switch ignores the button press.

When the covering user presses the CONFERENCE button after the call goes to coverage, the temporary bridged appearance is removed from the principal's voice terminal.

Data Call Setup

If a data module is in a coverage path, it is skipped during the search for an available coverage point. If a data module calls an extension with coverage active, the call does not cover.

DDC (Direct Department Calling)

See UCD interaction.

Display—Voice Terminal

If a multiappearance voice terminal user who is busy on a call receives a call on another appearance, the new call can redirect to coverage after the don't answer interval. However, when this occurs, the covering user (equipped with a display) to whom the call redirects will receive a redirection notification of ''b'' (for busy) rather than ''d'' (for don't answer).

DCS (Distributed Communications System)

In a DCS environment, the covering user and the principal must be located on the same node.

EUCD (Enhanced Uniform Call Distribution)

Same as the ACD interaction.

Extension Number Portability

If an extension is part of Call Coverage, either as a principal or a covering extension, it must be removed from coverage before it can be ported to a new node.

Hold

If a covering user places a coverage call on hold and the principal then bridges onto the held call, the covering user who originally placed the call on hold drops off and cannot reenter the connection.

Hunting

When a call routes to coverage, Hunting is allowed from the last coverage point.

Intercom—Auto, Dial, and Manual

Intercom calls do not route to coverage.

LWC (Leave Word Calling)

LWC messages are sent to the principal originally called, even when calls redirect to coverage. The only exception is calls redirected to an attendant. Leave Word Calling is not allowed when a call is redirected to an attendant.

Coverage Message Retrieval

Coverage Message Retrieval is denied to any covering user not in the principal's coverage path, except for ''Global Retrievers.''

LWC on the Switch

Leave Word Calling can be provided on a switch that has no AP. Messages are stored on the switch.

Global Retrieval

Global retrievers can retrieve messages for anyone in the switch. This ability is useful for attendants and message center agents who may support users for whom they are not covering users. (Note that message retrieval cannot be assigned to an attendant console; a separate display voice terminal or data terminal must be used for this purpose.) Global retrievers need only one COVERAGE MSG RETRIEVAL button. The same button works for global retrieval, as well as for coverage-path retrieval. All messages accessible by Coverage Message Retrieval can be accessed globally.

Main/Satellite/Tributary

Call Coverage cannot redirect a call over a tie trunk. Therefore, a terminal user at a satellite location cannot provide coverage for a terminal user at the main.

Override

An Override call does not route to coverage.

Precedence Calling

The Call Coverage feature functions normally for a Precedence Calling incoming call. The call will route to coverage if the established coverage criteria are met. However, a Precedence Calling incoming call does not route to group coverage (i.e., Message Center, ACD Group, or AUDIX).

Priority Calling

A Priority Call does not redirect to coverage. Only nonpriority calls (calls that do not terminate with 3-burst ringing) are routed to covering users.

Queuing

A *Queuing Callback Call* is treated as a priority call and does not route to coverage. These callbacks ring at the terminal that originally placed the call. Callback calls do not cover, even if coverage is in effect.

Queuing in a Main/Satellite Arrangement

If the original call was placed between a Main/Satellite switching arrangement and is placed in a ringback queue, the callback call appears to the switch as a normal tandem tie trunk incoming call and coverage occurs.

Restriction—Attendant Control of Voice Terminals

If Controlled Termination Restriction is activated toward an extension with coverage active, the restriction overrides, and calls to that extension do not route to coverage.

Restriction—Voice Terminal Restrictions

If Termination Restriction is assigned to an extension with coverage active, the restriction overrides, and calls to that extension do not redirect to coverage.

Ringing—Abbreviated and Delayed Ringing

The Send All Calls and Cover All functions of the Call Coverage feature take precedence over Abbreviated and Delayed Ringing. These functions control the redirection of ringing.

The Cover Don't Answer function of the Call Coverage feature takes precedence over Abbreviated and Delayed Ringing when the amount of ringing cycles used to time both features are equal.

The details of the don't answer condition are as follows. If the timing interval for the coverage group *is less than or equal to* the timing interval for Abbreviated and Delayed Ringing, terminating calls redirect to coverage without ringing the images(s) assigned delayed ringing. However, if the timing interval for the coverage group *is greater than* the timing interval for Abbreviated and Delayed Ringing, terminating calls first ring the abbreviated ringing image(s). Then, ringing transfers to the delayed ringing image(s), and these images ring for the rest of the Cover Don't Answer timing interval. After the Cover Don't Answer interval elapses, the call redirects to coverage.

Since Call Coverage takes precedence over Abbreviated and Delayed Ringing, ring-ping, if assigned in R2 V4, is heard for immediately redirected calls at the called party's terminal, except if delayed ringing (encode 2) is assigned in Procedure 052, Word 1, Field 11.

Ringing Cutoff

When Send All Calls and Ringing Cutoff are both active at a called voice terminal, ring-ping is not provided as the call redirects to coverage.

Ringing Transfer

Ringing Transfer takes precedence over Call Coverage. Call Coverage controls the redirection of ringing after the ringing cycle has completed at the secondary terminal.

SMDR (Station Message Detail Recording)

Same as CMDR interaction.

Tenant Services

There are no tests in Procedure 011, Word 1 to ensure that every point in a coverage path belongs to the same extension partition. It is the responsibility of the system manager to ensure that coverage paths do not cross partition boundaries.

There are also no tests in Procedure 000, Word 2 to ensure that a coverage group is only assigned to extensions residing in the same extension partition. It is the responsibility of the system manager to ensure that a coverage group pertaining to one extension partition is not assigned to an extension in another extension partition.

Transfer

Any attempt to activate the Transfer feature from a multiappearance voice terminal during the Caller Response Interval of a coverage call is denied. The switch ignores the button press.

After a call goes to coverage, if the covering user presses the TRANSFER button, the temporary bridged appearance is removed from the principal's voice terminal.

UCD (Uniform Call Distribution)

The extension number associated with a UCD or DDC cannot be assigned coverage. Individual group member extension numbers can be assigned coverage for calls addressed directly to those extensions.

To assign a UCD or DDC group as a coverage point, the group number (i.e., four for group 4 or five for group 5) is used rather than the extension number. A UCD or DDC group can be assigned only as the final point on a coverage path. The switch cannot redirect a call to coverage after the UCD/DDC feature has distributed the call to a group member.

The UCD/DDC group is classified as unavailable to serve as a covering user, if the UCD/DDC group has been made unavailable via a dial access code.

Unattended Console Service—Preselected Call Routing

When an attendant console is in the night mode, calls routed to the preselected voice terminal from the unattended console do not redirect to coverage. Only direct calls to the preselected voice terminal assigned coverage are redirected.

Variable Format Call Detail Recording

The extension number of the covering user, rather than the principal, is recorded in the Dialed Number field by CDR when a call is redirected and answered by a covering user.

If a covering user answers a redirected call on a soft number, the *primary extension number* of the covering user's voice terminal (not the soft number or the principal's number) is recorded in the call record.

HARDWARE REQUIREMENTS

The applicable hardware for Call Coverage is dependent on the type of voice terminal available to the covering user. While any voice terminal will meet the requirements of call coverage, the following combinations can be used to provide enhanced capabilities for covering users.

- The 7205H Voice Terminal with the C201A Call Coverage Module

  This combination provides 20 additional 2-lamp appearances identified to specific principals to allow one voice terminal to cover a larger group of terminals.

- The 7404D VDS (Voice/Data Station) with the Z300B Messaging Cartridge and an associated EIA type data terminal such as the 513 BCT

  This combination provides an EIA data terminal with the capability of accessing and displaying messages using the Display Voice Terminal feature.

- The 7405D Voice Terminal with the C401A Call Coverage Module

  This combination provides the covering user with the same functionality as the 7205H voice terminal with C201A Coverage Module. Call Coverage modules are generally used by covering users.

- The 7405D Voice Terminal with the D401A Display Module

  This combination provides the covering user with identification of the calling party (internal calls) or outside source and the principal. It further provides the covering user, when permissions are granted, with the ability to access messages for supported principals.

  NOTE: The Call Coverage Module and the Digital Display Module are mutually exclusive. That is, the same terminal cannot use both modules at the same time.

- The 7406D With Display

  This is a digital voice terminal, smaller than the 7407D, with an optional built-in display module. It provides the covering user with identification of the calling party (internal calls) or outside source and principal. It provides the covering user, when permissions are granted, with the ability to access messages for supported principals.

- The 7407D IDT (Integrated Display Terminal)

  This is a digital voice terminal, similar to the 7405D, with a built-in display module. It provides the covering user with identification of the calling party (internal calls) or outside source and the principal. It provides the covering user, when permissions are granted, with the ability to access messages for supported principals.

- The AT&T Personal Terminal 510D or 515 BCT (Business Communications Terminal).

  These are data terminals with integrated voice terminal capabilities. Both of these terminals can access the Display—Voice Terminal feature and, therefore, provide the same functionality as the 7405D Voice Terminal with D401A Digital Display Module or the 7407D IDT.

FEATURE ADMINISTRATION

Assignment of the Call Coverage feature is defined by the coverage paths(s) and criteria for the group and then assigning the group to a principal.

The Call Coverage feature is administered using the MAAP (Maintenance and Administration Panel). The customer can partially administer this feature using the SMT (System Management Terminal) or the TCM (Terminal Change Management) feature. This feature can also be administered using CSM (Centralized System Management).

The following are the applicable MAAP and SMT procedures.

MAAP AND SMT PROCEDURES — CALL COVERAGE			
PROCEDURE	**WORD**	**PURPOSE**	**SMT**
000	1	Assigns the voice terminal class of service to an extension number.	Yes
000	2	Assigns a coverage group to an extension (for group numbers between 2,000 and 4,095, use an even group number). Also, designates whether a covering user is authorized Coverage Message Retrieval.	Yes
010	1	Assigns Send All Calls to a voice terminal's class of service. This procedure also assigns ring-ping tone to the class of service (R2 V4 only).	Yes
011	1	Administers the coverage path(s) and criteria for a coverage group.	Yes
051	1	Assigns coverage/display capabilities to the plug-in modules used on designated H/D Series voice terminals.	Yes

MAAP AND SMT PROCEDURES — CALL COVERAGE (Contd)			
PROCEDURE	**WORD**	**PURPOSE**	**SMT**
052	1	Assigns appearances of extensions on a multiappearance terminal as members of the Send All Calls group (Field 14) (R2 V4 only).	Yes
054	1	Assigns the buttons to a multiappearance voice terminal for Call Coverage. The applicable encode include: 19 Send All Calls Button 19 Send All Calls — Group of Extensions Button (R2 V4) 20 Consult Button 23 Coverage Callback Button 29 Send All Calls — Extension (R2 V4).	Yes
054	4	Assigns the display feature buttons to the 7405D, 510D, or 515 BCT voice terminal, or to the D401A display module for the 7405D.	Yes
063	1	Assigns an automatic message waiting lamp to a voice terminal.	Yes
075	1	Displays all voice terminals having the same coverage group assignment.	Yes
275	3	Specifies the Caller Response Interval and the Coverage Don't Answer Interval.	Yes
350	1	Assigns the first digit of the dial access codes used with Call Coverage (if required).	No
350	2	Assigns the dial access codes for the Call Coverage feature. Applicable encodes are as follows: 55 Activate Send All Calls 56 Cancel Send All Calls.	No

The following are the applicable TCM path names used with the AP 16.

TCM SCREENS — CALL COVERAGE	
PATH NAME	**PURPOSE**
terminal-change class-of-service attributes	Assigns Send All Calls to a voice terminal class of service.
terminal-change extensions attributes	Assigns the class of service to an extension number. Use this screen to assign a coverage group(s) to an extension number (for group numbers between 2,000 and 4,095, use an even group number). Also, use this screen to designate whether or not the line permits Coverage Message Retrieval.
terminal-change group coverage	Administers the characteristics of a coverage group (or pair of coverage groups).
terminal-change system parameters (select Call-Coverage option)	Assigns the Caller Response Interval and the Coverage Don't Answer Interval.
terminal-change terminal buttons	Assigns the Send All Calls, Consult, or Coverage Callback button to a multiappearance voice terminal. Also, use this screen to assign the display feature buttons to the 7405D, 510D, 515 BCT voice terminal, or the display module for the 7405D. This screen is also used to assign the Automatic Message Waiting lamp to a voice terminal.

The following are the applicable CSM Command Paths utilizing the **admin** area of TCM or FM.

CSM SCREENS — MASKS CALL COVERAGE		
APPL'N	**OBJECT**	**PURPOSE**
TCM	extension	Assigns the voice terminal class of service to an extension number. Assigns access to message retrieval and the AP or AUDIX machine, assigns the coverage group to an extension and assigns the automatic message waiting lamp to an analog voice terminal.
TCM	class-of-service	Administers the features and/or restrictions assigned to the voice terminal(s) class of service. Assigns the Send All Calls feature to a voice terminal class of service. (System 85 R2 V4) Assigns ring-ping to the class of service.
TCM	This command will be set type: i.e., 36-button, 12-button, bct, data-module, feature-module, coverage-module, or vds.	Assigns appearances of extensions on a multiappearance terminal as members of the Send All Calls group.
TCM	call-coverage-path	Administers a coverage path and defines its attributes, including coverage criteria, no answer interval, and the coverage points. Call coverage allows voice terminal users to have automatic call redirection to alternate answering voice terminals for message handling and screening. This command can link two call coverage paths for dual coverage for the System 85 R2 V4
TCM	This command will be set type: i.e., 36-button, 12-button, bct, data-module, feature-module, coverage-module, or vds.	Assigns coverage/display capabilities to the plug-in modules used on designated H/D Series voice terminals. Defines terminal attributes and button feature assignments. Assigns appearances of extensions on a multiappearance terminal as members of the Send All Calls group. Assigns an automatic message waiting lamp to a voice terminal.
TCM/FM	sys-cos	Defines the Caller Response Interval and the Coverage Don't Answer Interval.
TCM/FM	first-digit	Assigns the first digit of the dial access codes used with Call Coverage (if required).
TCM/FM	dial-access-code	Assigns the dial access codes for the Call Coverage feature.

CALL FORWARDING—BUSY AND DON'T ANSWER

DESCRIPTION

The Call Forwarding—Busy and Don't Answer feature redirects calls to one extension number and sends them to another specified extension number or to the attendant queue.

When this feature is active, calls are forwarded whenever the called terminal is busy or the user does not answer the call within a specified period (number of ringing cycles). The user selects the forwarding destination when activating the feature. The Call Forwarding—Busy and Don't Answer feature is activated or canceled by either the voice terminal user or the attendant.

Call Forwarding—Busy and Don't Answer provides a simple form of local call redirection for calls that might otherwise go unanswered.

The don't answer interval is flexible and may be chosen by the customer. To suit the needs of an individual switch, the don't answer interval can be set from one to eight ring cycles. The designated interval will be the same for every terminal within the switch.

Feature History and Development

The Call Forwarding—Busy and Don't Answer feature was first available on System 85 in Release 1. There have been no changes to his feature since its introduction.

USER OPERATIONS

The following are the user operating procedures for this feature.

To Activate Call Forwarding to a Voice Terminal

From the forwarding terminal:

- Go off-hook. [Dial tone]
- Dial the Call Forwarding—Busy and Don't Answer access code,

  or

- Press the feature button. [Second dial tone]

- Dial the destination extension number. [Confirmation tone]
- Go on-hook.

From the Attendant Console for a voice terminal:

- Press an idle loop button. [PA lamp goes out, and ATND lamp lights.]
- Press START. [Dial tone]
- Dial the Call Forwarding—Busy and Don't Answer access code. [Second dial tone]
- Dial the extension number of the forwarding terminal,

or

- Press the appropriate DXS button. [Third dial tone]
- Dial the forwarding destination extension number,

or

- Press the appropriate DXS button. [Confirmation tone]
- Press RELEASE. [ATND lamp goes out, and PA lamp lights.]

To Activate Call Forwarding to the Attendant Queue

From the forwarding terminal:

- Go off-hook. [Dial tone]
- Dial the Call Forwarding—Busy and Don't Answer access code,

or

- Press the feature button. [Second dial tone]
- Dial the attendant access code, or dial an LDN (listed directory number). [Confirmation tone]
- Go on-hook.

To Cancel Call Forwarding

From the forwarding terminal:

- Go off-hook. [Dial tone]
- Dial the Call Forwarding—Cancel access code,

or

- Press the feature button. [Confirmation tone]
- Go on-hook.

From the Attendant Console for a voice terminal:

- Press an idle loop button. [PA lamp goes out, and ATND lamp lights.]
- Press START. [Dial tone]
- Dial the Call Forwarding—Cancel access code. [Second dial tone]
- Dial the extension number of the forwarding terminal. [Confirmation tone]
- Press RELEASE. [ATND lamp goes out, and PA lamp lights.]

To Activate Call Forwarding While on a 2-Way Connection

Using a Single-Appearance Terminal:

- Momentarily press the switchhook,

or

- Press RECALL. [Recall dial tone is heard, and the second party put on soft hold.]
- Dial the Call Forwarding—Busy and Don't Answer access code. [Second dial tone]
- Dial the forwarding destination extension number. [Confirmation tone]
- Momentarily press the switchhook,

or

- Press RECALL. [Reconnected to the second party.]

Using a Multiappearance Terminal:

- Press CONFERENCE or TRANSFER. [Dial tone is heard, and the second party put on hold.]
- Dial the Call Forwarding—Busy and Don't Answer access code,

or

- Press the feature button. [Second dial tone]
- Dial the forwarding destination extension number. [Confirmation tone]
- Select the held appearance. [Held party is reconnected.]

To Cancel Call Forwarding While on a 2-Way Connection

Using a Single-Appearance Terminal:

- Momentarily press the switchhook,

  or

- Press RECALL. [Recall dial tone is heard, and second party placed on soft hold.]
- Dial the Call Forwarding—Cancel access code. [Confirmation tone]
- Momentarily press the switchhook,

  or

- Press RECALL. [Reconnected to the second party.]

Using a Multiappearance Terminal:

- Press the CONFERENCE or TRANSFER button. [Dial tone is heard, and second party is put on hold.]
- Dial the Call Forwarding—Cancel access code,

  or

- Press the Call Forwarding—Busy Don't Answer feature button. [Confirmation tone]
- Select the held appearance. [Held party is reconnected.]

CONSIDERATIONS

Limitations

Call Forwarding—Busy and Don't Answer can only be used within the local switch. Even in a DCS environment, this feature cannot be used to forward calls to a distant network node.

Forwarding to an Attendant

Call Forwarding—Busy and Don't Answer can be used to forward calls to the attendant queue, but forwarding to a *selected attendant* is not allowed.

Two Types of Forwarding Not Allowed

Call Forwarding—Busy and Don't Answer and Call Forwarding—Follow Me cannot be activated at the same time on the same voice terminal. The switch returns intercept tone when this is attempted.

Two Destinations Not Allowed

The terminal user must always cancel the previous forwarding destination before establishing a new destination for forwarding. Without previous cancellation, the switch returns intercept tone.

Double Forwarding Not Allowed

Terminal A may activate forwarding to terminal B, and terminal B may activate forwarding to terminal C. However, this does not imply that terminal A's calls will forward to terminal C. Voice terminal calls forward only once.

Mutually Exclusive Features

Call Forwarding—Busy and Don't Answer and Call Forwarding—Don't Answer cannot be assigned to the same class of service. Therefore, a voice terminal user can have access to either one of these two features, but not both. Both features are activated using the same dial access code (Encode 2) and using the same feature button (Encode 4). When either method of activation is used, the feature accessed depends on the class-of-service entry in Procedure 010, Word 1, Field 4: ''1'' defines Call Forwarding—Busy and Don't Answer, and ''2'' defines Call Forwarding—Don't Answer.

Hard and Soft Processor Swaps

Call Forwarding relationships are stored in a translation portion of switch memory. Therefore, if Call Forwarding is activated to forward calls to a local extension number and then a hard processor swap occurs, the forwarding relationship will endure after the hard swap is finished.

INTERACTIONS WITH OTHER FEATURES

The following System 85 features affect or are affected by the operation of this feature.

Attendant Call Waiting

When Call Forwarding—Busy and Don't Answer is active at the called voice terminal, the forwarding operation occurs before Attendant Call Waiting is allowed. There are four possible operations. If the originally called voice terminal is busy and the forwarded-to voice terminal is idle, attendant calls forward to and ring at the forwarded-to voice terminal. If the originally called voice terminal is busy and the forwarded-to voice terminal is busy, attendant calls forward to and wait on the forwarded-to voice terminal. If there is no answer at the originally called voice terminal and the forwarded-to voice terminal is idle, attendant calls forward to and ring at the forwarded-to voice terminal. If there is no answer at the originally called voice terminal and the forwarded-to voice terminal is busy, attendant calls continue ringing at the originally called voice terminal.

AUDIX (Audio Information Exchange)

The Call Forwarding—Busy and Don't Answer feature cannot be used to forward calls to the AUDIX extension number. When this is attempted, the switch returns intercept tone.

ACD (Automatic Call Distribution)

When an ACD split supervisor activates Call Forwarding—Busy and Don't Answer (Intraflow—Threshold), calls are forwarded to a local destination in an overflow condition. The Don't Answer portion of this feature does not apply.

The split supervisor cannot use call forwarding to forward calls to the supervisor's individual extension number. Activation of either feature only forwards calls which are directed to the split.

For ACD calls, there can be three forwarding destinations arranged in a priority scheme. If the first priority destination is unavailable, the second and third destinations are checked. However, if the first or second priority destination is an attendant or an ACD split (without the inflow level specified for the split), the remaining priority destinations would not be checked. Instead, a forwarded call would unconditionally enter the attendant's or the split's queue.

When an ACD call is forwarded to another local split, the caller hears the first delay recorded announcement corresponding to the initially dialed split.

Automatic Callback

Call Forwarding—Busy and Don't Answer has no effect on an Automatic Callback call origination. Callback always directs to the originating terminal, not to the forwarded-to terminal.

Busy Verification of Lines

Busy verification is allowed toward a line even if the line has Call Forwarding—Busy and Don't Answer active.

Call Coverage

When a call is forwarded to a principal with coverage active, the forwarded call does not redirect to coverage. If the principal doesn't answer, the forwarded call rings until abandoned at the principal's voice terminal. For situations where cover active or cover busy would apply, the switch returns busy tone to the calling party.

Call Vectoring

The Call Forwarding—Busy and Don't Answer feature cannot be used to forward calls to a VDN.

With Call Vectoring assigned, an ACD split supervisor can use this feature to forward calls for the supervisor's individual extension. Without Call Vectoring assigned, Call Forwarding—Busy and Don't Answer is instead used to forward calls which are directed to the split's queue.

CDRR (Call Detail Recording and Reporting)

The extension that a call forwards to is the extension number that CDRR records in the called number field.

Call Waiting

When Call Forwarding—Busy and Don't Answer is active at the called voice terminal, the forwarding operation occurs before Call Waiting is allowed. There are four possible operations. If the originally called voice terminal is busy and the forwarded-to voice terminal is idle, calls forward to and ring at the forwarded-to voice terminal. If the originally called voice terminal is busy and the forwarded-to voice terminal is busy, calls forward to and wait on the forwarded-to voice terminal. If there is no answer at the originally called voice terminal and the forwarded-to voice terminal is idle, calls forward to and ring at the forwarded-to voice terminal. If there is no answer at the originally called voice terminal and the forwarded-to voice terminal is busy, calls forward to and wait on the forwarded-to voice terminal.

CMDR (Centralized Message Detail Recording)

See the SMDR interaction.

Data Call Setup

Call Forwarding—Busy and Don't Answer can be used by voice terminal and data terminal users. For data terminals, this type of forwarding can serve as a substitute for Call Coverage.

DCS (Distributed Communications System)

The Call Forwarding—Busy and Don't Answer feature is not transparent in the DCS environment. The forwarded-to extension in a call forwarding relationship cannot reside in a different DCS node.

EUCD (Enhanced Uniform Call Distribution)

When an EUCD split supervisor activates Call Forwarding—Busy and Don't Answer (Intraflow—Threshold), calls are forwarded to a local destination in an overflow condition. The Don't Answer portion of this feature does not apply.

The split supervisor cannot use call forwarding to forward calls to the supervisor's individual extension number. Activation of either feature only forwards calls which are directed to the split.

For EUCD calls, there can be three forwarding destinations arranged in a priority scheme. If the first priority destination is unavailable, the second and third destinations are checked. However, if the first or second priority destination is an attendant or an EUCD split (without the inflow level specified for the split), the remaining priority destinations would not be checked. Instead, a forwarded call would unconditionally enter the attendant's or the split's queue.

When an EUCD call is forwarded to another local split, the caller hears the first delay recorded announcement corresponding to the initially dialed split.

Extension Number Portability

Call Forwarding—Busy and Don't Answer cannot be used to forward calls outside the switch. Thus, an extension number that has been ported to a new node cannot be a forwarded-to extension.

Hold

Hard hold ringbacks for single-appearance voice terminals are not forwarded. Instead, the held call rings back the terminal that placed the call on hold when the user goes on-hook.

Hunting

When a call forwards to a terminal in a hunt group, another terminal in the hunt group may receive the call rather than the designated terminal (hunting occurs).

When an incoming call reaches a terminal in a hunt group with Call Forwarding—Busy and Don't Answer active, the call forwards to the designated terminal (call forwarding takes precedence).

IPA (Interpartition Access)

A voice terminal user (in a partition other than Extension Partition 0) is allowed to forward calls to another voice terminal in the same partition group or in Extension Partition 0. The switch will return intercept treatment to a user attempting to forward calls to any other partition group.

Last Extension Dialed

Call Forwarding can be used in conjunction with Last Extension Dialed. This is useful when activation of the Call Forwarding—Busy and Don't Answer feature toward the last extension dialed is desired. (Dial the Call Forwarding—Busy and Don't Answer DAC or press the feature button before pressing the LXD feature button.)

Last Number Dialed

Call Forwarding can be used in conjunction with Last Number Dialed. This is useful when activation of the Call Forwarding—Busy and Don't Answer feature toward the last number dialed is desired. (Dial the Call Forwarding—Busy and Don't Answer DAC or press the feature button before pressing the LND feature button.)

Leave Word Calling

Within the local switch, Leave Word Calling messages direct to the principal originally called even when the calls redirect via Call Forwarding—Busy and Don't Answer. The only exception to this is calls redirected to the attendant. Leave Word Calling is not allowed when a call is redirected to the attendant.

Line Lockout

A call directed toward a locked-out voice terminal with Call Forwarding active will forward to the designated terminal.

Override

When a called terminal has activated Call Forwarding—Busy and Don't Answer, an override call does not forward. Three-burst ringing is provided for an idle forwarding terminal, and the override call enters the conversation of a busy forwarding terminal.

Priority Calling

When Call Forwarding is in effect, the forwarding operation occurs before Priority Calling is allowed. There are four possible operations. If the originally called voice terminal is busy and the forwarded-to voice terminal is idle, calls forward to and ring at the forwarded-to voice terminal. If the originally called voice terminal is busy and the forwarded-to voice terminal is busy, calls forward to and wait on the forwarded-to voice terminal. If there is no answer at the originally called voice terminal and the forwarded-to voice terminal is idle, calls forward to and ring at the forwarded-to voice terminal. If there is no answer at the originally called voice terminal and the forwarded-to voice terminal is busy, calls forward to and wait on the forwarded-to voice terminal.

Restriction—Attendant Control of Voice Terminals

Call Forwarding—Busy and Don't Answer cannot be activated to forward calls to a terminal that *is already restricted* by Controlled Terminal-to-Terminal, Controlled Termination, or Controlled Total restriction. When this is attempted the switch returns intercept tone.

If calls are *already being forwarded* to a voice terminal before an attendant activates a termination restriction against the forwarded-to terminal, these forwarded calls are allowed to terminate to the restricted terminal.

If a voice terminal has forwarding activated, and then an attendant activates a termination restriction against the forwarding terminal, calls to the forwarding terminal do not terminate or forward. The switch returns intercept tone to the calling party.

Restriction—Voice Terminal Restrictions

Calls may not forward to a voice terminal with Restriction—Voice Terminal Restrictions (Termination, Manual Terminating Line, or Terminal-to-Terminal Calling) activated.

Incoming calls on public or private network trunks may not forward to an Inward restricted terminal.

Call Forwarding—Busy and Don't Answer functions normally for an Origination restricted voice terminal when the attendant or a single-line voice terminal user activates the Call Forwarding—Busy and Don't Answer feature from a hold or recall dial tone state. The Origination restricted terminal is not allowed to activate Call Forwarding—Busy and Don't Answer from an idle state.

If an unrestricted voice terminal is assigned as the forwarded-to voice terminal and then Restriction—Voice Terminal Restrictions (Inward, Termination, Terminal-to-Terminal Only, or Manual Terminating Line) restriction is activated in its line class of service, calls will still forward to the voice terminal.

Ringing—Abbreviated and Delayed

Call Forwarding—Busy and Don't Answer takes precedence over Abbreviated and Delayed Ringing when the amount of ringing cycles used to time both features are equal.

The details of the don't answer condition are as follows. If the timing interval for call forwarding *is less than or equal to* the timing interval for Abbreviated and Delayed Ringing, terminating calls forward to the destination extension without ringing the image(s) assigned delayed ringing. However, if the timing interval for call forwarding *is greater than* the timing interval for Abbreviated and Delayed Ringing, terminating calls first ring the abbreviated ringing image(s). Then ringing transfers to the delayed ringing image(s), and these images ring for the rest of the call forwarding timing interval. After the call forwarding timing interval elapses, the call forwards to the destination extension.

SMDR (Station Message Detail Recording)

The extension that a call forwards to is the extension number that SMDR records in the called number field.

Tenant Services

A voice terminal user (in a partition other than Extension Partition 0) is allowed to forward calls to another voice terminal in the same partition or in Extension Partition 0. The switch will return intercept treatment to a user attempting to forward calls to any other partition.

Timed Reminder

If the attendant presses the STA ID button after the extended call forwards, the attendant display indicates the extension number that the call forwarded to rather than the originally called extension number.

Variable Format Call Detail Recording

The call record shows the extension number that the Call Forwarding—Busy and Don't Answer feature directed the call to as the called number.

RESTRICTING FEATURE USE

Voice Terminal Restrictions

The voice terminal restrictions that restrict call forwarding are:

- Termination restriction
- Manual Terminating Line restriction
- Terminal-to-Terminal Only Calling restriction.

Attendant Control of Voice Terminal Restrictions

The attendant can restrict terminals from being used as a destination for forwarding. The restrictions are:

- Termination restriction
- Total restriction
- Terminal-to-Terminal restriction.

The application of Attendant Control of Voice Terminal restrictions takes precedence over the Call Forwarding—Busy and Don't Answer feature only when applied before the Call Forwarding—Busy and Don't Answer feature is activated.

HARDWARE REQUIREMENTS

None.

FEATURE ADMINISTRATION

Assignment of the Call Forwarding—Busy and Don't Answer feature is on a per-terminal class-of-service basis.

This feature is administered using the MAAP (Maintenance and Administration Panel). The customer can partially administer this feature using the SMT (System Management Terminal) or the TCM (Terminal Change Management) feature. This feature can also be administered using CSM (Centralized System Management).

The following are the applicable MAAP and SMT procedures.

MAAP AND SMT PROCEDURES
CALL FORWARDING—BUSY AND DON'T ANSWER

PROCEDURE	WORD	PURPOSE	SMT
000	1	Assigns the voice terminal class of service to an extension number.	Yes
010	1	Assigns Call Forwarding—Busy and Don't Answer to a voice terminal class of service. (Enter ''1'' in Field 4.)	Yes
054	2	Administers the Call Forwarding—Busy and Don't Answer button to a multiappearance voice terminal. The applicable encode is: 4 Call Forwarding—Busy and Don't Answer	Yes
200	1	Specifies the don't answer timing interval (one to eight cycles) for call forwarding.	No
204	1	Designates the desired alphanumeric display for calls forwarded to an attendant.	No
350	1	Assigns the first digit of the feature dial access codes (if required).	No
350	2	Assigns the feature dial access codes. The applicable encodes are as follows: 2 Call Forwarding—Busy and Don't Answer 3 Call Forwarding—Cancel.	No

The following are the applicable TCM path names used with the AP 16.

TCM SCREENS — CALL FORWARDING—BUSY AND DON'T ANSWER	
PATH NAME	**PURPOSE**
terminal-change class-of-service attributes	Assigns Call Forwarding—Busy and Don't Answer to a voice terminal class of service.
terminal-change extensions attributes	Assigns the class of service to an extension number.
terminal-change terminal buttons	Assigns the Call Forwarding—Busy and Don't Answer button to a multiappearance voice terminal.

The following are the applicable CSM Command Paths utilizing the **admin** area of TCM or FM.

CSM SCREENS — MASKS CALL FORWARDING — BUSY AND DON'T ANSWER		
APPL'N	**OBJECT**	**PURPOSE**
TCM	extension	Assigns the voice terminal class of service to an extension number.
TCM	class-of-service	Administers the features and/or restrictions assigned to the voice terminal(s) class of service. Assigns Call Forwarding — Busy and Don't Answer to a voice terminal class of service.
TCM	This command will be set type: i.e., 36-button, 12-button, bct, data-module, feature-module, coverage-module, or vds.	Administers the button assigned to Call Forwarding — Busy and Don't Answer.
TCM	console-features	Assigns the don't answer timing for call forwarding.
TCM	console-messages	Designates the desired alphanumeric display for calls forwarded to an attendant.
TCM/FM	first-digit	Assigns the first digit of the feature dial access code (if required).
TCM	dial-access-code	Assigns the feature dial access codes.

CALL FORWARDING—DON'T ANSWER

DESCRIPTION

This feature forwards calls at an extension number to another selected extension number or to the attendant queue. When this feature is active, calls forward whenever the user does not answer the call. The user designates the forwarding destination when activating the feature. Either a voice terminal user or the attendant can activate or cancel the feature.

The feature provides a simple form of local coverage for calls that might otherwise go unanswered.

The don't answer interval is flexible and may be chosen by the customer. To suit the needs of an individual switch, the don't answer interval can be set from one to eight ring cycles. The designated interval will be the same for every terminal within the switch.

Feature History and Development

This feature was first available on System 85 in Release 1. There have been no changes to this feature since its introduction.

USER OPERATIONS

The following are the user operating procedures for this feature.

To Activate Call Forwarding to a Voice Terminal

From the forwarding terminal:

- Go off-hook. [Dial tone]
- Dial the Call Forwarding—Don't Answer access code, or press the feature button. [Second dial tone]
- Dial the destination extension number. [Confirmation tone]
- Go on-hook.

From the Attendant Console for a voice terminal:

- Press an idle loop button. [PA lamp goes out, and ATND lamp lights.]
- Press START. [Dial tone]
- Dial the Call Forwarding—Don't Answer access code. [Second dial tone]
- Dial the extension number of the forwarding terminal, or press the appropriate DXS button. [Third dial tone]
- Dial the forwarding destination extension number, or press the appropriate DXS button. [Confirmation tone]
- Press RELEASE. [ATND lamp goes out, and PA lamp lights.]

To Activate Call Forwarding to the Attendant Queue

From the forwarding terminal:

- Go off-hook. [Dial tone]
- Dial the Call Forwarding—Don't Answer access code, or press the feature button. [Second dial tone]
- Dial the attendant access code, or dial an LDN (listed directory number). [Confirmation tone]
- Go on-hook.

To Cancel Call Forwarding

From the forwarding terminal:

- Go off-hook. [Dial tone]
- Dial the Call Forwarding—Cancel access code, or press the feature button. [Confirmation tone]
- Go on-hook.

From the Attendant Console for a voice terminal:

- Press an idle loop button. [PA lamp goes out, and ATND lamp lights.]
- Press START. [Dial tone]
- Dial the Call Forwarding—Cancel access code. [Second dial tone]
- Dial the extension number of the forwarding terminal. [Confirmation tone]
- Press RELEASE. [ATND lamp goes out, and PA lamp lights.]

To Activate Call Forwarding While on a 2-Way Connection

Using a Single-Appearance Terminal:

- Momentarily press the switchhook, or press RECALL. [Recall dial tone is heard, and the second party put on soft hold.]
- Dial the Call Forwarding—Don't Answer access code. [Second dial tone]
- Dial the forwarding destination extension number. [Confirmation tone]
- Momentarily press the switchhook, or press RECALL. [Reconnected to the second party.]

Using a Multiappearance Terminal:

- Press CONFERENCE or TRANSFER. [Dial tone is heard, and the second party put on hold.]
- Dial the Call Forwarding—Don't Answer access code, or press the feature button. [Second dial tone]
- Dial the forwarding destination extension number. [Confirmation tone]
- Select the held appearance. [Held party is reconnected.]

To Cancel Call Forwarding While on a 2-Way Connection

Using a Single-Appearance Terminal:

- Momentarily press the switchhook, or press RECALL. [Recall dial tone is heard, and second party placed on soft hold.]
- Dial the Call Forwarding—Cancel access code. [Confirmation tone]
- Momentarily press the switchhook, or press RECALL. [Reconnected to the second party.]

Using a Multiappearance Terminal:

- Press the CONFERENCE or TRANSFER button. [Dial tone is heard, and second party is put on hold.]
- Dial the Call Forwarding—Cancel access code, or press the Call Forwarding—Don't Answer feature button. [Confirmation tone]
- Select the held appearance. [Held party is reconnected.]

CONSIDERATIONS

Limitations

Call Forwarding—Don't Answer can only be used within the local switch. Even in a DCS environment, this feature cannot be used to forward calls to a distant network node.

Forwarding to an Attendant

Call Forwarding—Don’t Answer can be used to forward calls to the attendant queue, but forwarding to a *selected attendant* is not allowed.

Two Types of Forwarding Not Allowed

Call Forwarding—Don’t Answer and Call Forwarding—Follow Me cannot be activated at the same time on the same voice terminal. The switch returns intercept tone when this is attempted.

Two Destinations Not Allowed

The terminal user must always cancel the previous forwarding destination before establishing a new destination for forwarding. Without previous cancellation, the switch returns intercept tone.

Double Forwarding Not Allowed

Terminal A may activate forwarding to terminal B, and terminal B may activate forwarding to terminal C. However, this does not imply that terminal A’s calls will forward to terminal C. Voice terminal calls forward only once.

Mutually Exclusive Features

Call Forwarding—Don’t Answer and Call Forwarding—Busy and Don’t Answer cannot be assigned to the same class of service. Therefore, a voice terminal user can have access to either one of these two features, but not both. Both features are activated using the same dial access code (Encode 2) and using the same feature button (Encode 4). When either method of activation is used, the feature accessed depends on the class-of-service entry in Procedure 010, Word 1, Field 4: ‘‘2’’ defines Call Forwarding—Don’t Answer, and ‘‘1’’ defines Call Forwarding—Busy and Don’t Answer.

Hard and Soft Processor Swaps

Call Forwarding relationships are stored in a translation portion of switch memory. Therefore, if Call Forwarding is activated to forward calls to a local extension number and then a hard processor swap occurs, the forwarding relationship will endure after the hard swap is finished.

INTERACTIONS WITH OTHER FEATURES

The following System 85 features affect or are affected by the operation of this feature.

Attendant Call Waiting

When Call Forwarding—Don't Answer is active at the called voice terminal, the forwarding operation occurs before Attendant Call Waiting is allowed. There are two possible operations. If there is no answer at the originally called voice terminal and the forwarded-to voice terminal is idle, attendant calls forward to and ring at the forwarded-to voice terminal. If there is no answer at the originally called voice terminal and the forwarded-to voice terminal is busy, attendant calls continue ringing at the originally called voice terminal.

AUDIX (Audio Information Exchange)

The Call Forwarding—Don't Answer feature cannot be used to forward calls to the AUDIX extension number. When this is attempted, the switch returns intercept tone.

ACD (Automatic Call Distribution)

An ACD split supervisor cannot activate Call Forwarding—Don't Answer to forward the supervisor's calls. When an ACD split supervisor activates Call Forwarding—Don't Answer, the split's calls are forwarded to a local destination in an overflow condition (as if Call Forwarding—Busy and Don't Answer were instead assigned to the supervisor's class of service).

For ACD calls, there can be three forwarding destinations arranged in a priority scheme. If the first priority destination is unavailable, the second and third destinations are checked. However, if the first or second priority destination is an attendant or an ACD split (without the inflow level specified for the split), the remaining priority destinations would not be checked. Instead, a forwarded call would unconditionally enter the attendant's or the split's queue.

When an ACD call is forwarded to another local split, the caller hears the first delay recorded announcement corresponding to the initially dialed split.

Automatic Callback

Call Forwarding—Don't Answer has no effect on an Automatic Callback call origination. Callbacks always direct to the originating terminal, not to the forwarded-to terminal.

Busy Verification of Lines

Busy verification is allowed toward a line even if the line has Call Forwarding—Don't Answer active.

Call Coverage

When a call is forwarded to a principal with coverage active, the forwarded call does not redirect to coverage. If the principal doesn't answer, the forwarded call rings until abandoned at the principal's voice terminal. For situations where cover active or cover busy would apply, the switch returns busy tone to the calling party.

Call Vectoring

The Call Forwarding—Don't Answer feature cannot be used to forward calls to a VDN.

With Call Vectoring assigned, an ACD split supervisor can use this feature to forward calls directed to the supervisor's individual extension. Without Call Vectoring assigned, Call Forwarding—*Busy and* Don't is instead used to forward calls which are directed to the splits queue. (This is true even if Call Forwarding—Don't Answer is assigned to the supervisor's class of service.)

CDRR (Call Detail Recording and Reporting)

The extension that a call forwards to is the extension number that CDRR records in the called number field.

Call Waiting

When Call Forwarding—Don't Answer is active at the called voice terminal, the forwarding operation occurs before Call Waiting is allowed. There are two possible operations. If there is no answer at the originally called voice terminal and the forwarded-to voice terminal is idle, calls forward to and ring at the forwarded-to voice terminal. If there is no answer at the originally called voice terminal and the forwarded-to voice terminal is busy, calls forward to and wait on the forwarded-to voice terminal.

CMDR (Centralized Message Detail Recording)

The extension that a call forwards to is the extension number that CMDR records in the called number field.

DCS (Distributed Communications System)

The Call Forwarding—Don't Answer feature is not transparent in the DCS environment. The forwarded-to extension in a call forwarding relationship cannot reside in a different DCS node.

EUCD (Enhanced Uniform Call Distribution)

An EUCD split supervisor cannot activate Call Forwarding—Don't Answer to forward the supervisor's calls. When an EUCD split supervisor activates Call Forwarding—Don't Answer, the split's calls are forwarded to a local destination in an overflow condition (as if Call Forwarding—Busy and Don't Answer were instead assigned to the supervisor's class of service).

For EUCD calls, there can be three forwarding destinations arranged in a priority scheme. If the first priority destination is unavailable, the second and third destinations are checked. However, if the first or second priority destination is an attendant or an EUCD split (without the inflow level specified for the split), the remaining priority destinations would not be checked. Instead, a forwarded call would unconditionally enter the attendant's or the split's queue.

When an EUCD call is forwarded to another local split, the caller hears the first delay recorded announcement corresponding to the initially dialed split.

Extension Number Portability

Call Forwarding—Don't Answer cannot be used to forward calls outside the switch. Thus, an extension number that has been ported to a new node cannot be a forwarded-to extension.

Hold

Hard hold ringbacks for single-appearance voice terminals are not forwarded. Instead, the held call rings back the terminal that placed the call on hold when the user goes on-hook.

Hunting

When a call forwards to a terminal in a hunt group, another terminal in the hunt group may receive the call rather than the designated terminal (hunting occurs).

When an incoming call reaches a terminal in a hunt group with Call Forwarding—Don’t Answer active, the call forwards to the designated terminal if the call is not answered. When the forwarding terminal is busy, the call will hunt.

IPA (Interpartition Access)

A voice terminal user (in a partition other than Extension Partition 0) is allowed to forward calls to another voice terminal in the same partition group or in Extension Partition 0. The switch will return intercept treatment to a user attempting to forward calls to any other partition group.

Last Extension Dialed

Call Forwarding can be used in conjunction with Last Extension Dialed. This is useful when activation of the Call Forwarding—Don't Answer feature toward the last extension dialed is desired. (Dial the Call Forwarding—Don't Answer DAC or press the feature button before pressing the LXD feature button.)

Last Number Dialed

Call Forwarding can be used in conjunction with Last Number Dialed. This is useful when activation of the Call Forwarding—Don't Answer feature toward the last number dialed is desired. (Dial the Call Forwarding—Don't Answer DAC or press the feature button before pressing the LND feature button.)

Leave Word Calling

Within the local switch, Leave Word Calling messages direct to the principal originally called even when the calls redirect via Call Forwarding—Don't Answer. The only exception to this is calls redirected to the attendant. Leave Word Calling is not allowed when a call is redirected to the attendant.

Line Lockout

A call directed toward a locked-out voice terminal with Call Forwarding—Don't Answer active will not forward. Instead, the switch returns busy tone to the calling party.

Override

When a called terminal has activated Call Forwarding—Don't Answer, an override call does not forward. Three-burst ringing is provided for the idle forwarding terminal.

Priority Calling

When Call Forwarding is in effect, the forwarding operation occurs before Priority Calling is allowed. There are two possible operations. If there is no answer at the originally called voice terminal and the forwarded-to voice terminal is idle, calls forward to and ring at the forwarded-to voice terminal. If there is no answer at the originally called voice terminal and the forwarded-to voice terminal is busy, calls forward to and wait on the forwarded-to voice terminal.

Restriction—Attendant Control of Voice Terminals

Call Forwarding—Don't Answer cannot be activated to forward calls to a terminal that *is already restricted* by Controlled Terminal-to-Terminal, Controlled Termination, or Controlled Total restriction. When this is attempted, the switch returns intercept tone.

If calls are *already being forwarded* to a voice terminal before an attendant activates a termination restriction against the forwarded-to terminal, these forwarded calls are allowed to terminate to the restricted terminal.

If a voice terminal has forwarding activated, and then an attendant activates a termination restriction against the forwarding terminal, calls to the forwarding terminal do not terminate or forward. The switch returns intercept tone to the calling party.

Restriction—Voice Terminal Restrictions

Calls may not forward to a voice terminal with Restriction—Voice Terminal Restrictions (Termination, Manual Terminating Line, or Terminal-to-Terminal Calling) activated.

Incoming calls on public or private network trunks may not forward to an Inward restricted terminal.

Call Forwarding—Don't Answer functions normally for an Origination restricted voice terminal when the attendant or a single-line voice terminal user activates the Call Forwarding—Don't Answer feature from a hold or recall dial tone state. The Origination restricted terminal is not allowed to activate Call Forwarding—Don't Answer from an idle state.

If an unrestricted voice terminal is selected as the forwarded-to voice terminal and then restricted by the Restriction—Voice Terminal Restrictions feature (class-of-service) in a way that would normally block the forwarded call, calls will still forward (forwarding takes precedence).

Ringing—Abbreviated and Delayed

Call Forwarding—Don't Answer takes precedence over Abbreviated and Delayed Ringing when the number of ringing cycles used to time both features is equal.

The details are as follows. If the timing interval for call forwarding *is less than or equal to* the timing interval for Abbreviated and Delayed Ringing, terminating calls forward to the destination extension without ringing the image(s) assigned delayed ringing. However, if the timing interval for call forwarding *is greater than* the timing interval for Abbreviated and Delayed Ringing, terminating calls first ring the abbreviated ringing image(s). Then ringing transfers to the delayed ringing image(s), and these images ring for the rest of the call forwarding timing interval. After the call forwarding timing interval elapses, the call forwards to the destination extension.

SMDR (Station Message Detail Recording)

The extension that a call forwards to is the extension number that SMDR records in the called number field.

Tenant Services

A voice terminal user (in a partition other than Extension Partition 0) is allowed to forward calls to another voice terminal in the same partition or in Extension Partition 0. The switch will return intercept treatment to a user attempting to forward calls to any other partition.

Timed Reminder

If the attendant presses the STA ID button after the extended call forwards, the attendant display indicates the extension number that the call forwarded to rather than the originally called extension number.

Variable Format Call Detail Recording

The call record shows the extension number that the Call Forwarding—Don't Answer feature directed the call to as the called number.

RESTRICTING FEATURE USE

Voice Terminal Restrictions

The voice terminal restrictions that restrict call forwarding are:

- Termination restriction
- Manual Terminating Line restriction
- Terminal-to-Terminal Only Calling restriction.

Attendant Control of Voice Terminal Restrictions

The attendant can restrict terminals from being used as a destination for forwarding. The restrictions are:

- Termination restriction
- Total restriction
- Terminal-to-Terminal restriction.

The application of Attendant Control of Voice Terminal restrictions takes precedence over the Call Forwarding—Don't Answer feature only when applied before the Call Forwarding— Don't Answer feature is activated.

HARDWARE REQUIREMENTS

None.

FEATURE ADMINISTRATION

Assignment of the Call Forwarding—Don't Answer feature is on a per-terminal class-of-service basis.

This feature is administered using the MAAP (Maintenance and Administration Panel). The customer can partially administer this feature using the SMT (System Management Terminal) or the TCM (Terminal Change Management) feature. This feature can also be administered using CSM (Centralized System Management).

The following are the applicable MAAP and SMT procedures.

MAAP AND SMT PROCEDURES
CALL FORWARDING—DON'T ANSWER

PROCEDURE	WORD	PURPOSE	SMT
000	1	Assigns the voice terminal class of service to an extension number.	Yes
010	1	Assigns Call Forwarding—Don't Answer to a voice terminal class of service. (Enter ''2'' in Field 4.)	Yes
054	2	Administers the Call Forwarding—Don't Answer button to a multiappearance voice terminal. The applicable encode is: 4 Call Forwarding—Busy and Don't Answer	Yes
200	1	Specifies the don't answer timing interval (one to eight cycles) for call forwarding.	No
204	1	Designates the desired alphanumeric display for calls forwarded to an attendant.	No
350	1	Assigns the first digit of the feature dial access codes (if required).	No
350	2	Assigns the feature dial access codes. The applicable encodes are as follows: 2 Call Forwarding—Busy and Don't Answer 3 Call Forwarding—Cancel.	No

The following are the applicable TCM path names used with the AP 16.

TCM SCREENS — CALL FORWARDING—DON'T ANSWER	
PATH NAME	**PURPOSE**
terminal-change class-of-service attributes	Assigns Call Forwarding—Don't Answer to a voice terminal class of service.
terminal-change extensions attributes	Assigns the class of service to an extension number.
terminal-change terminal buttons	Assigns the Call Forwarding—Don't Answer button to a multiappearance voice terminal.

The following are the applicable CSM Command Paths utilizing the **admin** area of TCM or FM.

CSM SCREENS — MASKS CALL FORWARDING-DON'T ANSWER		
APPL'N	**OBJECT**	**PURPOSE**
TCM	extension	Assigns the voice terminal class of service to an extension number.
TCM	class-of-service	Administers the features and estrictions assigned to the voice terminal(s) class of service. Assigns the Call Forwarding — Don't Answer feature to a voice terminal class of service.
TCM	This command will be set type: i.e., 36-button, 12-button, bct, data-module, feature-module, coverage-module, or vds.	Administers the Call Forwarding — Don't Answer feature button.
TCM	console-features	Assigns the don't answer timing for call forwarding.
TCM	console-messages	Designates the desired alphanumeric display for calls forwarded to an attendant.
TCM/FM	first-digit	Assigns the first digit of the feature dial access code (if required).
TCM	dial-access-code	Assigns the feature dial access codes.

CALL FORWARDING—FOLLOW ME

DESCRIPTION

This feature forwards all calls from a given extension number to another selected extension number, to the attendant queue, or to a telephone in the nontoll public network. Either a voice terminal user or the attendant can activate or cancel this feature. When a call is placed to a voice terminal with Call Forwarding—Follow Me active, ring ping [a quick burst of ringing (0.1 seconds)] is provided at the forwarding terminal. This is to remind the user that the terminal is still in the forwarding mode.

Forwarding calls to another extension is useful when the user will be at the forwarded-to voice terminal, or the forwarded-to voice terminal user will be there. Forwarding calls to another extension also reduces attendant work load.

Feature History and Development

This feature was first available on System 85 in Release 1. Call Forwarding—Off Net was first available in the Release 2, Version 1 software package. This function allows users to forward all calls to a telephone in the nontoll public network.

USER OPERATIONS

The following are the user operating procedures for this feature.

To Activate Call Forwarding—Follow Me to a Voice Terminal

From the forwarding terminal:

- Go off-hook. [Dial tone]
- Dial the Call Forwarding—Follow Me access code, or press the feature button. [Second dial tone]
- Dial the destination extension number. [Confirmation tone]
- Go on-hook.

From the Attendant Console for a voice terminal:

- Press an idle loop button. [PA lamp goes out, and the ATND lamp lights.]
- Press START. [Dial tone]
- Dial the Call Forwarding—Follow Me access code. [Second dial tone]
- Dial the extension number of the forwarding terminal, or press the appropriate DXS button. [Third dial tone]
- Dial the extension number of the destination terminal, or press the appropriate DXS button. [Confirmation tone]
- Press RELEASE. [ATND lamp goes out, and PA lamp lights.]

To Activate Call Forwarding to the Attendant Queue

From the forwarding terminal:

- Go off-hook. [Dial tone]
- Dial the Call Forwarding—Follow Me access code, or press the feature button. [Second dial tone]
- Dial the attendant access code, or dial an LDN (listed directory number). [Confirmation tone]
- Go on-hook.

To Activate Call Forwarding—Off Net

From the forwarding terminal:

- Go off-hook. [Dial tone]
- Dial the Call Forwarding—Follow Me access code, or press the feature button. [Second dial tone]
- Dial the trunk-group access code or the ARS access code. [Third dial tone.]
- Dial a 7-digit public-network telephone number. [Confirmation tone]
- Go on-hook.

To Cancel Call Forwarding—Follow Me

From the forwarding terminal:

- Go off-hook. [Dial tone]
- Dial the Call Forwarding—Cancel access code, or press the Call Forwarding—Follow Me feature button. [Confirmation tone]

- Go on-hook.

From the Attendant Console for a voice terminal:

- Press an idle loop button. [PA lamp goes out, and ATND lamp lights.]
- Press START. [Dial tone]
- Dial the Call Forwarding—Cancel access code. [Second dial tone]
- Dial the extension number of the forwarding terminal. [Confirmation tone]
- Press RELEASE. [ATND lamp goes out, and PA lamp lights.]

CONSIDERATIONS

Switch Capacities

Call Forwarding can be simultaneously activated to as many as 3,200 public telephone numbers and/or extension numbers in the DCS network.

Call Forwarding can be simultaneously activated to any number of local voice terminals.

Nontoll Off-Net Forwarding

Call Forwarding—Off Net can only be activated to forward calls to *nontoll telephone numbers* (i.e., 7-digit numbers). There are two primary reasons for this operation.

The first reason pertains to billing. It is usually questionable who should be billed for these toll calls. There are three choices: the calling party, the forwarding party, and the forwarded-to party. The calling party could be a local caller who is forwarded to the toll network, and then charged for an unexpected long-distance call. The forwarding party would be charged for every forwarded call; both the wanted calls and the unwanted calls. The forwarded-to party could be someone besides the user of the forwarding terminal. Again, these parties would be charged for unexpected long-distance calls.

The second reason pertains to transmission quality. It would be difficult to always provide a low enough noise level for these forwarded calls. The calling party could be a long-distance caller. After this call is forwarded over the toll network, the transmission level could fall below the usual transmission standards.

Off-Net Forwarding

With Call Forwarding—Off Net, the forwarded-to public-network telephone *can* forward calls toward its own forwarding System 85 voice terminal. (This capability is useful while the user is in transit between the two locations.) However, there is a safeguard in the switch software to prevent calls from forwarding back and forth between the two telephones. Then, after completing transit, the user should promptly cancel Call Forwarding at the point of arrival.

Attendant Restrictions

Call Forwarding—Follow Me can be used to forward all calls to the attendant queue, but forwarding to a *selected attendant* is not allowed.

Call Forwarding—Follow Me override allows the forwarded-to extension to call the forwarding

extension in a forwarding relationship. However, an attendant cannot call an extension that has activated Call Forwarding—Follow Me to the attendant queue.

The attendant queue can be the forwarded-to destination in a call forwarding relationship. However, the attendant cannot originate Call Forwarding in order to forward attendant seeking calls to another destination.

Intercept Tone

Intercept tone is heard when the terminal user attempts to establish a new destination for forwarding before canceling the previous destination.

Intercept tone is also heard when the forwarded-to voice terminal attempts to forward calls toward its own forwarding voice terminal.

Additionally, intercept tone is heard when attempting to activate Call Forwarding—Follow Me and Call Forwarding—Busy and Don't Answer at the same time on the same terminal.

Double Forwarding Not Allowed

Terminal A may activate forwarding to terminal B, and terminal B may activate forwarding to terminal C. However, terminal A's calls will not forward to terminal C. Voice terminal calls forward only once.

Hard and Soft Processor Swaps

Call Forwarding relationships are stored in a translation portion of switch memory. Therefore, if calls are forwarded to a local extension, DCS extension, or public-network telephone and then a hard processor swap occurs, the forwarding relationship will endure the hard swap.

INTERACTIONS WITH OTHER FEATURES

The following System 85 features affect or are affected by the operation of this feature.

Attendant Call Waiting

When Call Forwarding—Follow Me is active at the called voice terminal, the forwarding operation occurs before Attendant Call Waiting is allowed. There are two possible operations. Attendant calls forward to and ring at the forwarded-to voice terminal (if this voice terminal is idle). Otherwise, attendant calls forward to, and then wait on, the forwarded-to voice terminal (if this voice terminal is busy).

AUDIX (Audio Information Exchange)

The Call Forwarding—Follow Me feature can be used to forward all calls to the AUDIX extension number. When this is done, forwarded calls enter the AUDIX queue.

ACD (Automatic Call Distribution)

Call Forwarding—Follow Me (Intraflow—All), when activated for an ACD (or EUCD) associated extension number or the split supervisor's individual extension number, redirects the split's calls to a local switch destination.

a. Only the split supervisor or system supervisor can activate or deactivate Call Forwarding—Follow Me for an ACD (or EUCD) split. Nonsupervisory split members cannot activate call forwarding for

the entire split.

b. Only ACD (or EUCD) calls forward when Call Forwarding—Follow Me is active for the split. Calls to an individual extension number do not forward.

c. Nonsupervisory split members may activate Call Forwarding—Follow Me for calls to the individual member's extension number.

Automatic Callback

Call Forwarding—Follow Me has no effect on an Automatic Callback call origination. Callbacks always return to the originating terminal, not to the forwarded-to terminal.

If Call Forwarding—Follow Me is active at the called terminal when the Automatic Callback call is originated, the forwarded-to terminal is treated as the called line for the call.

If Call Forwarding—Follow Me is activated by the called terminal after an Automatic Callback request is placed, the Automatic Callback request remains active toward the originally called voice terminal. The callback request is not reapplied to the forwarding destination.

ARS (Automatic Route Selection)

When administering Call Forwarding—Off Net, all three ARS plans should be administered in Procedure 309, Word 1. Otherwise, when activating the Call Forwarding—Off Net feature, the ARS access code cannot be used as part of the destination's telephone number. Rather, the appropriate trunk-group dial access code would have to be dialed.

Also, when administering Call Forwarding—Off Net, the desired local office codes should be specified in the ARS Toll Table (Procedure 309, Word 2 and Procedure 309, Word 1, Field 9). Otherwise, when activating the Call Forwarding—Off Net feature, an office code that is not specifically assigned as *local* is presumed by the Call Forwarding—Off Net software to be a *toll* office code. And, since forwarding to the toll network is not provided, the switch would return intercept treatment.

Busy Verification of Lines

Busy verification is allowed toward a line even if the line has Call Forwarding—Follow Me active.

Call Coverage

When a call is forwarded to a principal with coverage active, the forwarded call does not redirect to coverage. If the principal doesn't answer, the forwarded call rings until abandoned at the principal's voice terminal. For situations where cover active or cover busy would apply, the switch returns busy tone to the calling party.

If Call Forwarding—Follow Me is active for an extension that has coverage, calls to that extension redirect according to call forwarding. If a coverage point has Call Forwarding—Follow Me active, the point is not eligible to receive a coverage call. If Call Forwarding—Follow Me is active for a coverage group [ACD (Automatic Call Distribution) or EUCD (Enhanced Uniform Call Distribution) split], coverage calls redirect to the split and then redirect according to call forwarding.

Call Vectoring

The Call Forwarding—Follow Me feature can be used to forward calls to a VDN. When this is done, the forwarded-to vector controls call processing for the forwarded call. For example, the call could enter an ACD split's queue (including AUDIX or Message Center), and be processed according to the vector's programming.

With Call Vectoring assigned, an ACD split supervisor can use this feature to forward calls for the supervisor's individual extension. Without Call Vectoring assigned, Call Forwarding—Follow Me is instead used to forward calls which are directed to the split's queue.

CMDR (Centralized Message Detail Recording)

The extension that a call forwards to (designated terminal) is the extension number that is recorded in the called number field.

Call Waiting

When Call Forwarding—Follow Me is active at the called voice terminal, the forwarding operation occurs before Call Waiting is allowed. There are two possible operations. Calls forward to and ring at the forwarded-to voice terminal (if this voice terminal is idle). Otherwise, calls forward to and wait on the forwarded-to voice terminal (if this voice terminal is busy).

DDC (Direct Department Calling)

Call Forwarding—Follow Me, when activated for a DDC group, routes all DDC calls to a designated terminal, the attendant queue, the centralized attendant queue, or to another UCD or DDC group's queue immediately after dialing. If a call is already queued when this feature is activated, the call remains in queue for 7 seconds before forwarding.

a. Only the controlling terminal or attendant can activate or deactivate Call Forwarding—Follow Me for a DDC or UCD group. Other group terminals cannot activate or cancel Call Forwarding—Follow Me even if authorized by their line class of service.

b. Only calls to the DDC or UCD group number forward when Call Forwarding—Follow Me is active. Calls to an individual terminal or controlling terminal number do not forward.

c. The stop hunt option should be assigned to each DDC or UCD group member's class of service. Otherwise, when calls forward to a group member's extension, the call is treated as a call to the group (hunting occurs).

DCS (Distributed Communications System)

The Call Forwarding—Follow Me feature is transparent in the DCS environment. The forwarded-to extension in a call forwarding relationship can reside in a different DCS node.

EUCD (Enhanced Uniform Call Distribution)

See ACD (Automatic Call Distribution) interactions.

Hold

Hard hold ringbacks for single-appearance voice terminals are not forwarded. Instead, the held call rings back the terminal that placed the call on hold when the user goes on-hook.

Hunting

When a call forwards to a terminal in a hunt group, another terminal in the hunt group may receive the call rather than the designated terminal (hunting occurs).

When a terminal in a hunt group has Call Forwarding—Follow Me active, the terminal is temporarily removed from the hunt group. Calls hunting through the hunt group bypass this terminal.

If the designated terminal has Call Waiting active and is in a hunt group, a call forwarded to the busy designated terminal hunts for an idle line first and then waits on the designated terminal if no idle line is found.

IPA (Interpartition Access)

A voice terminal user (in a partition other than Extension Partition 0) is allowed to forward calls to another voice terminal in the same partition group or in Extension Partition 0. The switch will return intercept treatment to a user attempting to forward calls to any other partition group.

Last Extension Dialed

Call Forwarding can be used in conjunction with Last Extension Dialed. This is useful when activation of the Call Forwarding—Follow Me Answer feature toward the last extension dialed is desired. (Dial the Call Forwarding—Follow Me DAC or press the feature button before pressing the LXD feature button.)

Last Number Dialed

Call Forwarding can be used in conjunction with Last Number Dialed. This is useful when activation of the Call Forwarding—Follow Me Answer feature toward the last number dialed is desired. (Dial the Call Forwarding—Follow Me DAC or press the feature button before pressing the LND feature button.)

Leave Word Calling

Leave Word Calling messages are addressed to the principal originally dialed, even when a redirection feature is active. The only exception to this is calls redirected to the attendant. Leave Word Calling is not allowed when a call is redirected to the attendant.

In a Distributed Communications System environment, Leave Word Calling cannot be activated toward the originally called voice terminal unless the node has an Applications Processor.

Line Lockout

A call directed toward a locked-out voice terminal with Call Forwarding active will forward to the designated terminal.

Modem Pooling

The Call Forwarding—Follow Me feature functions normally for data calls except that a data call requiring Modem Pooling should not be forwarded to an attendant. An attendant established (transferred) call does not receive a Modem Pooling conversion resource. The attendant must extend the call to a multiappearance voice terminal with one button transfer capability (see Data Call Setup feature) to complete the call for a conversion resource to be provided.

Override

An Override call does not forward when Call Forwarding—Follow Me is active. Three-burst ringing is provided for an idle forwarding terminal, and the override call enters the conversation of a busy forwarding terminal.

Priority Calling

When Call Forwarding is active at the called voice terminal, the forwarding operation occurs before Priority Calling is allowed. There are two possible operations. Calls forward to and ring at the forwarded-to voice terminal (if this voice terminal is idle). Otherwise, calls forward to and wait on the forwarded-to voice terminal (if this voice terminal is busy).

Queuing

If a callback attempt is made from a tandem switch to a subtending switch, the call appears as an ordinary incoming tie trunk call to the subtending switch. Therefore, if the called terminal has Call Forwarding—Follow Me active, the callback forwards to the designated terminal.

When a callback attempt is made to a local terminal, it is not forwarded if Call Forwarding—Follow Me is activated. The callback call is placed to the line which placed the call in queue.

Restriction—Attendant Control of Voice Terminals

See the ‘‘Restricting Feature Use’’ section.

Restriction—Voice Terminal Restrictions

Calls may not forward to a voice terminal with Restriction—Voice Terminal Restrictions (Termination, Manual Terminating Line, or Terminal-to-Terminal Only Calling) activated.

Incoming calls on public or private network trunks may not forward to an Inward restricted terminal.

Call Forwarding—Follow Me functions normally for an Origination restricted voice terminal when an attendant activates the feature for the voice terminal. However, the Origination restricted voice terminal is only allowed to activate Call Forwarding—Follow Me from a hold or recall dial tone state. If Call Forwarding—Follow Me is activated, only the attendant can deactivate it.

If an unrestricted voice terminal is assigned as the forwarded-to voice terminal and then Restriction—Voice Terminal Restrictions (Inward, Termination, Terminal-to-Terminal Only Calling, or Manual Terminating Line) is activated in its line class of service, calls will still forward to the voice terminal.

Call forwarding is permitted between two data modules even though both are Terminal-to-Terminal Only Calling restricted.

Ringing—Abbreviated and Delayed Ringing

Call Forwarding—Follow Me has precedence over Abbreviated and Delayed Ringing. Call Forwarding—Follow Me controls the redirection of ringing.

Ringing Cutoff

When Call Forwarding—Follow Me and Ringing Cutoff are both active at a called voice terminal, ringping is not provided as the call forwards.

Ringing Transfer

Call Forwarding—Follow Me takes precedence over Ringing Transfer. Call Forwarding—Follow Me controls the redirection of ringing.

SMDR (Station Message Detail Recording)

See CMDR (Centralized Message Detail Recording) interaction.

Tenant Services

A voice terminal user (in a partition other than Extension Partition 0) is allowed to forward calls to another voice terminal in the same partition or in Extension Partition 0. The switch will return intercept treatment to a user attempting to forward calls to any other partition.

Call Forwarding—Off Net is allowed in a partitioned System 85. This forwarding can be activated using the ARS/AAR access code or using the access code of a trunk group that is dedicated to the user's extension partition.

Timed Reminder

When pressing the STA ID button, the attendant display indicates the extension number that the call forwarded to rather than the originally called extension number.

UCD (Uniform Call Distribution)

See DDC (Direct Department Calling) interaction.

Variable Format Call Detail Recording

The call record shows the extension number that the Call Forwarding—Follow Me feature directed the call to as the called number.

RESTRICTING FEATURE USE

Voice Terminal Restrictions

The voice terminal restrictions that restrict call forwarding are:

- Termination restriction
- Manual Terminating Line restriction
- Terminal-to-Terminal Only Calling restriction.

Attendant Control of Voice Terminal Restrictions

The application of Attendant Control of Terminal Access restrictions takes precedence over the Call Forwarding—Follow Me feature only when applied before the Call Forwarding—Follow Me feature is activated. The restrictions are:

- Termination restriction
- Total restriction
- Terminal-to-terminal restriction.

HARDWARE REQUIREMENTS

None.

FEATURE ADMINISTRATION

Assignment of the Call Forwarding—Follow Me feature is on a terminal class-of-service basis.

This feature is administered using the MAAP (Maintenance and Administration Panel). The customer can partially administer this feature using the SMT (System Management Terminal) or the TCM (Terminal Change Management) feature. This feature can also be administered using CSM (Centralized System Management).

The following are the applicable MAAP and SMT procedures.

MAAP AND SMT PROCEDURES — CALL FORWARDING—FOLLOW ME			
PROCEDURE	**WORD**	**PURPOSE**	**SMT**
000	1	Assigns the voice terminal class of service to an extension number.	Yes
000	2	Specifies the destination AUDIX adjunct for calls forwarded to the AUDIX extension number (Field 10).	Yes
010	1	Assigns Call Forwarding—Follow Me to a voice terminal class of service.	Yes
010	2	Assigns Call Forwarding—Off Net to a voice terminal class of service.	Yes
054	2	Administers the Call Forwarding—Follow Me button to a multiappearance voice terminal. The applicable encode is as follows: 3 Call Forwarding—Follow Me.	Yes
204	1	Designates the desired alphanumeric display for calls forwarded to the attendant.	No
309	1	Assigns the three ARS routing plans for use by Call Forwarding—Off Net.	Yes
309	2	Assigns the local office codes to the ARS Toll Table for use by Call Forwarding—Off Net. (Local office codes that are not assigned to the toll table are presumed to be *toll* office codes.)	Yes
350	1	Assigns the first digit of the dial access codes (if required).	No
350	2	Assigns the feature dial access codes. The applicable encodes are as follows: 1 Call Forwarding—Follow Me 3 Call Forwarding—Cancel.	No

The following are the applicable TCM path names used with the AP 16.

TCM SCREENS — CALL FORWARDING—FOLLOW ME	
PATH NAME	**PURPOSE**
terminal-change class-of-service attributes	Assigns Call Forwarding—Follow Me to a voice terminal class of service.
terminal-change extensions attributes	Assigns the class of service to an extension number. Also, specifies the AUDIX number (1 to 4) for calls forwarded to the AUDIX extension number.
terminal-change terminal buttons	Administers the the Call Forwarding—Follow Me button to a multiappearance voice terminal.

The following are the applicable CSM Command Paths utilizing the **admin** area of TCM or FM.

CSM SCREENS — MASKS CALL FORWARDING — FOLLOW ME		
APPL'N	**OBJECT**	**PURPOSE**
TCM	extension	Assigns the voice terminal class of service to an extension number. Specifies the destination AUDIX adjunct for calls forwarded to the AUDIX extension number.
TCM	class-of-service	Administers the features and/or restrictions assigned to the voice terminal(s) class of service. Assigns Call Forwarding — Off Net to a voice terminal class of service. Assigns Call Forwarding — Follow Me to a voice terminal class of service.
TCM	This command will be set type: i.e., 36-button, 12-button, bct, data-module, feature-module, coverage-module, or vds.	Administers the Call Forwarding — Follow Me feature button.
TCM	console-messages	Designates the desired alphanumeric display for calls forwarded to an attendant.
FM	ars-schedule	Defines and schedules the three time-of-day plans for use with Call Forwarding—Off Net.
FM	ars-toll	Assigns the local office codes to the ARS Toll Table for use by Call Forwarding—Off Net. (Local office codes that are not assigned to the toll table are presumed to be *toll* office codes.)
TCM/FM	first-digit	Assigns the first digit of the feature dial access code (if required).
TCM/FM	dial-access-code	Assigns the feature dial access codes.

CALL PARK

DESCRIPTION

This feature is used to place a call on hold and then transfer the call to an answer-back channel. That call can then be answered on any other voice terminal within the switch. The call is reanswered by dialing the answer-back access code and the answer-back channel number.

This procedure is useful when call-related information is in another area, or the call could be handled more conveniently in another area. This feature also allows an option to have music while waiting for an answer-back.

Feature History and Development

This feature was first available on System 85 in Release 1. The enhancements to this feature include:

- Automatic attendant recall was provided for Release 2, Version 2.
- An option to have music while waiting for an answer-back was added for Release 2, Version 3.
- An administrable recall button is provided for Release 2, Version 4 and was also retrofitted to the Release 2, Versions 2 and 3.

USER OPERATIONS

The following are the user operating procedures for this feature.

To Park a Call

Using a single-appearance voice terminal:

- Press RECALL

  or

- Momentarily press the switchhook. [Second party is placed on hold. Recall dial tone is heard.]
- Dial the Call Park trunk-group access code. [Second dial tone]
- Dial the Call Park zone number.

- Dial an idle answer-back channel number. [Confirmation tone]
- Press RECALL. [Ringback tone]
- Go on-hook. [Held party is transferred to the previously dialed answer-back channel and hears ringback tone or music while waiting for the answer-back call.]

Using a multiappearance voice terminal:

- Press TRANSFER. [Second party is placed on hold. Dial tone is heard.]
- Dial the Call Park trunk-group access code. [Second dial tone]
- Dial the Call Park zone number.
- Dial an idle answer-back channel number. [Confirmation tone]
- Press RECALL. [Ringback tone]
- Press TRANSFER. [Held party is transferred to the previously dialed answer-back channel and hears ringback tone or music while waiting for the answer-back call.}
- Go-on-hook.

To Pickup a Parked Call:

- Be sure, as a user, that the Call Park feature is activated.
- Go off-hook. [Dial tone]
- Dial the answer-back access code.
- Dial the previously used answer-back channel number. [Ringback tone or music is removed from the waiting line, both parties hear confirmation tone, a 2-party connection is established, and the answer-back channel is released.]

CONSIDERATIONS

Busy Tone

Busy tone is heard if the call park zone or answer-back channel is busy.

Intercept Tone

Intercept tone is heard if an invalid access code, invalid zone number, invalid answer-back code, or invalid channel number is dialed. Intercept tone is also heard if the answer-back code was dialed, and the second party is no longer waiting for the answer-back call.

Answer-Back Channels

Nine answer-back channels are available. These are the same answer-back channels used with the Loudspeaker Paging feature. These answer-back channels are shared by both features.

Availability

Call Park is available only with the Loudspeaker Paging. A single-line voice terminal user must be

assigned the Conference—Three Party feature to use Call Park.

Parked Incoming Trunk Calls

Beginning with R2 V2, incoming trunk calls that are parked by a voice terminal will automatically recall an attendant after two minutes. At this time, the attendant can appropriately handle the call.

Administrable Recall Buttons

Some multiappearance voice terminals do not have a fixed RECALL button. If RECALL buttons are needed for these voice terminals, RECALL buttons can be assigned to the terminals using Procedure 054, Word 1.

INTERACTIONS WITH OTHER FEATURES

The following System 85 features affect or are affected by the operation of this feature.

Attendant Call Waiting

The switch denies Attendant Call Waiting toward a line that is parked. Busy tone is returned.

Busy Verification of Lines

A line that is in Call Park cannot be busy verified using the Busy Verification of Lines feature. Intercept tone is returned.

Call Coverage

When a covering user activates the Call Park feature, the Temporary Bridged Appearance at the principal's voice terminal is removed, and the principal is unable to bridge onto the parked call.

CDRR (Call Detail Recording and Reporting)

The CDRR feature records the extension number of the last voice terminal in a Call Park connection.

Call Waiting

The switch denies Call Waiting toward a line that is in call park.

CMDR (Centralized Message Detail Recording)

The CMDR feature records the extension number of the last voice terminal in a Call Park connection.

Loudspeaker Paging Access

The Loudspeaker Paging Access feature and the Call Park feature are closely related. Administering Loudspeaker Paging, in effect, also enables Call Park. A paging zone that is not used for Loudspeaker Paging is assigned for use by Call Park. The paging zone assigned to Call Park requires an auxiliary trunk circuit to prevent alarms; however, it is not necessary to connect a paging amplifier to Call Park auxiliary trunk circuits. Both Call Park and Loudspeaker Paging Access share the same answer-back channels.

Music-on-Hold Access

When Music-on-Hold is implemented, music can be provided for a call on hold in an answer-back channel.

Override

The switch denies Override toward an extension in call park.

Priority Calling

The switch denies Priority Calling toward a line that is parked.

SMDR (Station Message Detail Recording)

The SMDR feature records the extension number of the last voice terminal in a Call Park connection.

Tenant Services

The call park zones for the Call Park feature are not partitioned. By default, the provided zones are equally accessible to voice terminal users in any extension partition.

Voice terminal access to the Call Park feature can be limited in the voice terminal class of service. To limit voice terminal access, assign a Miscellaneous Trunk Restrictions group containing the Call Park trunk group to a voice terminal class of service in Procedure 010, Word 3.

Answer-back channels for the Call Park feature are not partitioned. A parked call can be retrieved by

dialing the answer-back access code from any voice terminal in the switch.

Trunk Verification—Attendant and Voice Terminal

The Trunk Verification feature cannot verify a trunk that is in call park.

Unattended Console Service—Preselected Call Routing

When Preselected Call Routing is active, if a trunk party is placed in Call Park and the 2-minute timer for ringback tone times out, the trunk call is routed to the assigned preselected voice terminal.

Variable Format Call Detail Recording

The call record shows the extension number of the last voice terminal in a Call Park connection.

HARDWARE REQUIREMENTS

The following additional or special hardware is required for the Call Park feature.

- SN231, Auxiliary Trunk Circuit Pack

  Each Call Park zone requires an auxiliary trunk circuit (four circuits per circuit pack).

FEATURE ADMINISTRATION

Assignment of the Call Park feature is on a per-system basis.

This feature is administered using the MAAP (Maintenance and Administration Panel). The customer can partially administer this feature using the SMT (System Management Terminal) or the TCM (Terminal Change Management) feature. This feature can also be administered using CSM (Centralized System Management).

To provide music while waiting for answer back, the Music-on-Hold feature must also be assigned.

The following are the applicable MAAP and SMT procedures.

MAAP AND SMT PROCEDURES — CALL PARK			
PROCEDURE	**WORD**	**PURPOSE**	**SMT**
000	1	Assigns the voice terminal class of service to an extension number.	Yes
010	1	Assigns Conference—Three Party/Transfer to a voice terminal class of service for use with the Call Park feature.	Yes
010	3	Assigns Miscellaneous Trunk Restrictions to a voice terminal class of service.	Yes
054	1	Assigns the RECALL button to a multiappearance voice terminal without a fixed RECALL button. The applicable encode is: 27 Recall.	Yes
100	1	Administers the trunk dial access code and the trunk type for the Call Park feature.	No
102	—	Administers the Miscellaneous Trunk Restriction group associated with the Call Park trunk dial access code.	Yes
150	—	Assigns the SN231 equipment location and trunk feature of a Call Park trunk to its trunk-group number.	No
275	1	Assigns Call Park to the system class of service (Field 7) and assigns the music-on-hold option.	Yes
350	1	Assigns the first digit of the dial access codes (if required).	No
350	2	Assigns the feature dial access code. The applicable encode is: 17 Paging answer back.	No

The following are the applicable TCM path names used with the AP 16.

TCM SCREENS — CALL PARK	
PATH NAME	**PURPOSE**
terminal-change class-of-service attributes	Assigns Conference—Three Party/Transfer to a voice terminal class of service for use with the Call Park feature. Also, use this screen to assign Miscellaneous Trunk Restriction groups to the terminal class of service.
terminal-change extensions attributes	Assigns the class of service to an extension number.

The following are the applicable CSM Command Paths utilizing the **admin** area of TCM or FM.

CSM SCREENS — MASKS CALL PARK		
APPL'N	**OBJECT**	**PURPOSE**
TCM	extension	Assigns the voice terminal class of service to an extension number.
TCM	class-of-service	Assigns Conference — Three Party/Transfer to a voice terminal class of service for use with the Call Park feature. Assigns Miscellaneous Trunk Restrictions to a class of service.
TCM	The command will be set type: i.e., 36-button, 12-button, bct, vds, feature-module, coverage-module, or data-module.	Assigns the RECALL button to a multiappearance voice terminal without a fixed RECALL button.
FM	trk-grp	Administers the trunk dial access code and the trunk type for the Call Park feature.
FM	misc-trk-grp	Administers the Miscellaneous Trunk Restriction group associated with the Call Park trunk dial access code.
FM	trk	Assigns the SN231 equipment location and trunk feature of a Call Park trunk to its trunk group number.
TCM/FM	sys-cos	Assigns Call Park to the system class of service and assigns the music-on-hold option.
TCM/FM	first-digit	Assigns the first digit of the dial access code (if required).
TCM/FM	dial-access-code	Assigns the feature dial access code.

CALL PICKUP

DESCRIPTION

This feature allows anyone within a specified call pickup group to answer at their own voice terminal a call that is ringing at another extension within the group. This provides a simple means of answering unattended voice terminal calls.

Feature History and Development

This feature was first available on System 85 in Release 1. There have been no changes to this feature since its introduction.

USER OPERATIONS

The following are the user operating procedures for this feature.

To Answer a Call at Another Extension Within the Same Pickup Group

At a single-appearance or multiappearance voice terminal:

- Be sure a voice terminal in your pickup group is ringing.
- Go off-hook, or press an idle appearance button. [Dial tone]
- Dial the Call Pickup access code. [The call pickup user and the calling party are connected. The called terminal stops ringing.]

At a multiappearance voice terminal with a CALL PICKUP button:

- Be sure a voice terminal in your pickup group is ringing. [The CALL PICKUP button flashes.]
- Press CALL PICKUP. [The call pickup user and the calling party are connected, called terminal stops ringing, and flashing CALL PICKUP status lamp goes out.]

CONSIDERATIONS

Busy Tone

Busy tone is heard when attempting to pickup an Automatic Callback or Queuing callback call.

Intercept Tone

Intercept tone is heard when attempting to pickup a call in another pickup group or attempting to pickup a phone that is not ringing.

Limitations

Any number of extension numbers can be assigned to a Call Pickup group. A maximum of 999 Call Pickup groups can be assigned.

Terminal Locations

Call Pickup cannot be used to answer callback calls or calls to terminals in other pickup groups.

Because a Call Pickup user needs to know when a terminal in the group is ringing, place single-appearance terminals within a pickup group close together.

Colocating the voice terminals is not as necessary for multiappearance terminals. On multiappearance terminals, the Call Pickup lamp can flash to alert the Call Pickup user to a group call. This occurs whenever a voice terminal in the group is ringing and an appearance of an extension in the Call Pickup group is either manually or automatically preselected (i.e., the red status lamp is lit for an appearance of the extension).

Multiple Ringing Terminals

If more than one voice terminal in a pickup group is ringing when Call Pickup is activated, the switch selects the call which the Call Pickup user answers. The algorithm used is that a Call Pickup activation answers the most recent call that is ringing a voice terminal in the call pickup group.

Hard and Soft Processor Swaps

The extension numbers in a Call Pickup group are stored in a translation portion of switch memory. Therefore, the members in a Call Pickup group will remain unchanged after a hard processor swap.

INTERACTIONS WITH OTHER FEATURES

The following System 85 features affect or are affected by the operation of this feature.

Automatic Callback

A terminal user cannot pickup an Automatic Callback call to the originating terminal. Busy tone is heard.

Call Coverage

The switch denies activation of the Call Pickup feature to a Call Coverage user when attempting to:

a. Pickup a Temporary Bridged Appearance on a principal's voice terminal.

b. Pickup a coverage call during Coverage Tone or during the Caller Response Interval.

If a member of the covering user's pickup group uses Call Pickup to pickup a redirected call, the temporary bridged appearance on the principal's voice terminal remains intact. After the redirected call is picked up, the principal can still go off-hook on the temporary bridged appearance to join the call with the Call Pickup user.

CDRR (Call Detail Recording and Reporting)

When a call is answered using the Call Pickup feature, the answering terminal line is recorded, not the called terminal line.

CMDR (Centralized Message Detail Recording)

When a call is answered using the Call Pickup feature, the answering terminal line is recorded, not the called terminal line.

Data Call Setup

Although a data terminal (or more precisely, its extension number) can be assigned to a Call Pickup group, Call Pickup is blocked for data terminals. Data terminals cannot be used to pickup calls, nor can calls directed to a data terminal be picked up by other members of the pickup group.

Data Protection

Use of Call Pickup toward a call directed to a terminal with Data Protection—Permanent active is denied.

Extension Number Portability

An extension number must be removed from a pickup group, if assigned, before it can be ported to another node.

Hold

A single-appearance voice terminal user is denied use of the Call Pickup feature while holding a call on hard hold and soft hold at the same time.

A voice terminal user is allowed to place a call on hard hold, and then answer a call using Call Pickup. If this is done using soft hold, the held call is moved to hard hold and can be retrieved using the Call Hold access code.

Intercom

The Call Pickup feature cannot be used to pickup an Intercom call.

IPA (Interpartition Access)

There are no tests in Procedure 000, Word 2 to ensure that a Call Pickup group is only assigned to extensions residing in the same partition group. The system manager should ensure that every member of each Call Pickup group belongs to the same partition group.

When Call Pickup groups have been assigned to overlap partition-group boundaries, the call-processing software provides partitioning for the feature. If a Call Pickup group member in one partition group tries to pickup a call to another group member residing in a different partition group, intercept treatment is returned by the switch.

Leave Word Calling

Leave Word Calling messages are always addressed to the principal originally called, even when a call redirects via Call Pickup.

Queuing

A terminal user cannot pickup a local Queuing callback. Busy tone is heard.

A callback from a tandem switch looks like an incoming tie trunk call and can be picked up. Also, a callback call between a main and subtending switch appears as a normal tie trunk call and can be picked up.

Restriction—Attendant Control of Voice Terminals

A voice terminal that is otherwise restricted from receiving calls (by Controlled Terminal-to-Terminal, Outward and Terminal-to-Terminal, Controlled Termination, or Outward and Termination Restriction) is allowed to pickup group members' calls using Call Pickup.

Restriction—Voice Terminal Restrictions

A voice terminal with Voice Terminal Restrictions (Inward, Termination, Terminal-to-Terminal Only Calling, or Manual Terminating Line) activated may pickup a call directed to another voice terminal in the restricted voice terminal's Call Pickup group.

Serial Calls

When Serial Calls is in effect, pressing the RECALL button at a local terminal recalls the attendant. Therefore, a terminal user cannot access the Call Pickup feature during a serial call from a single-appearance terminal.

SMDR (Station Message Detail Recording)

When a call is answered using the Call Pickup feature, the answering terminal line is recorded, not the called terminal line.

Tenant Services

There are no tests in Procedure 000, Word 2 to ensure that a Call Pickup group is only assigned to extensions residing in the same extension partition. The system manager should ensure that every member of each Call Pickup group belongs to the same extension partition.

When Call Pickup groups have been assigned to overlap partition boundaries, the call-processing software provides partitioning for the feature. If a Call Pickup group member in one partition tries to pickup a call to another group member residing in a different extension partition, intercept treatment is returned by the switch.

Variable Format Call Detail Recording

The call record shows the extension number of the terminal using Call Pickup (the terminal that actually answered the call) as the called number.

RESTRICTING FEATURE USE

The Controlled Total Restriction and Origination Restriction features can prevent a terminal line from using the Call Pickup feature.

HARDWARE REQUIREMENTS

None.

FEATURE ADMINISTRATION

Assignment of the Call Pickup feature is on a per-terminal basis.

This feature is administered using the MAAP (Maintenance and Administration Panel). The customer can partially administer Call Pickup using the SMT (System Management Terminal) or the TCM (Terminal Change Management) feature. This feature can also be administered using CSM (Centralized System Management).

The following are the applicable MAAP and SMT procedures.

MAAP AND SMT PROCEDURES — CALL PICKUP			
PROCEDURE	**WORD**	**PURPOSE**	**SMT**
000	2	Assigns Call Pickup group numbers to a set of extensions.	Yes
054	2	Administers the Call Pickup button to a multiappearance voice terminal. The applicable encode is as follows: 7 Call Pickup.	Yes
075	1	Displays the voice terminals sharing a Call Pickup group assignment.	Yes
350	1	Assigns the first digit of the dial access code (if required).	No
350	2	Assigns the feature dial access code. The applicable encode is: 5 Call Pickup.	No

The following are the applicable TCM path names used with the AP 16.

TCM SCREENS — CALL PICKUP	
PATH NAME	**PURPOSE**
terminal-change group pickup	Displays or prints a report of the Call Pickup groups.
terminal-change extensions attributes	Assigns Call Pickup group numbers to a set of extension numbers.
terminal-change terminal buttons	Administers the Call Pickup button to a multiappearance voice terminal.

The following are the applicable CSM Command Paths utilizing the **admin** area of TCM or FM.

CSM SCREENS — MASKS CALL PICKUP		
APPL'N	**OBJECT**	**PURPOSE**
TCM	extension	Assigns Call Pickup group numbers to a set of extensions.
TCM	This command will be set type: i.e., 36-button, 12-button, bct, data-module, feature-module, coverage-module, or vds.	Administers the Call Pickup button to a multiappearance voice terminal.
TCM/FM	first-digit	Assigns the first digit of the dial access code (if required).
TCM/FM	dial-access-code	Assigns the feature dial access code.

CALL VECTORING

DESCRIPTION

The Call Vectoring feature is an enhanced and highly flexible way of processing incoming calls to the System 85 switch. Vectors are the basis of the Call Vectoring feature. These vectors are programmed using methods that resemble a ‘‘high-level’’ programming language. Using a ‘‘vector’’ (a discrete set of predefined call-processing steps), the customer can design appropriate and desirable ways of treating specific incoming calls.

Calls terminate to vectors using VDNs (vector directory numbers). A VDN is a ‘‘soft’’ extension number that is assigned an internal line number (but not assigned to an equipment location). (Each VDN can be published to enable public access to a vector’s call-processing sequence.) Vectors are assigned to VDNs (vector directory numbers). In turn, these VDNs can either be preassigned to incoming (or 2-way) trunk groups or passed in digit form to the System 85 by the serving switch.

Since more than one VDN can terminate to the same vector, the answering party can respond appropriately to the call with knowledge of the dialed number. Moreover, since a set of vectors can terminate to the same answering destination, the call-processing sequence can vary according to the vector reached. These ideas are shown in the following figure.

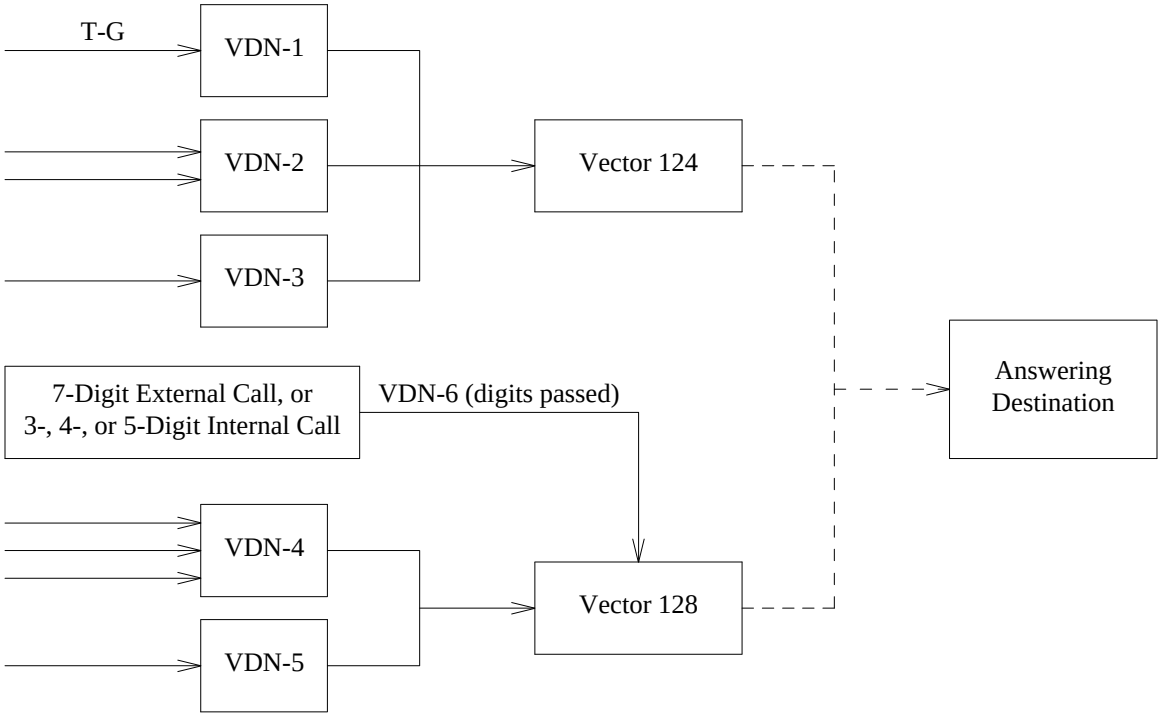

Figure 31-1. Trunk Groups, VDNs, Vectors, and Answering Destinations

Feature History and Development

This feature is first available for System 85 in Release 2, Version 4.

Vectoring in the General System 85 Environment

In the general System 85 environment, the Call Vectoring feature can be applied in an assortment of beneficial ways. Some of these applications represent new or enhanced functionality to the System 85 switch. Others represent alternate, sometimes simpler, ways to configure existing functionality. Depending on the configuration used and the parameters of the addressed need, these alternate configurations can also yield reduced costs for the customer. A representative list of these applications follows.

- Information announcements for calling party

  The human intervention needed to distribute common messages can be minimized with information announcements. A group of people with common interest can be instructed to call a specific number (VDN) that terminates to a specific announcement vector. The vector's announcement can be periodically updated to provide current information to the callers. Vectors providing information announcements are easily programmed. Refer to the pair of vectors under Vector J, ''Providing an Information Announcement for Callers,'' for examples of this type of vector.

- Vector processing before routing to the attendant queue

  Two realistic applications for vector processing attendant calls include: ''forced first announcement''

and ‘‘customized night service.’’ A forced-first-announcement vector is shown in Vector E, and a night-service vector is based on Vector G.

- Night Service for Message Center.

  A vector can be programmed to provide automatic AUDIX ‘‘night coverage’’ for calls that would otherwise redirect to an ‘‘unstaffed’’ Message Center split. The VDN that terminates to this vector is assigned as the final point in the principals’ coverage paths. In this way, redirected calls automatically cover to AUDIX Call Answering at night, while covering to Message Center during work hours. Refer to Vector I, ‘‘Using AUDIX to Provide Night Service for Message Center,’’ for an example of this type of vector.

- Recent-Disconnect Announcements and Tenant Services

  Multiple ‘‘recent-disconnect’’ announcements can be desirable for a partitioned switch (i.e., ‘‘You have reached an unworking number of the _____ Corporation.’’). When Call Vectoring is used on a partitioned switch, as many as 84 different recent-disconnect announcements can be provided.

  Whenever a voice terminal is taken out of service, the voice terminal can be removed using Procedure 001, Word 1 or 052, Word 1. Once the voice terminal is removed, the extension number is temporarily assigned as a VDN (in Procedure 000, Word 1) that points to a specific partition’s ‘‘recent-disconnect’’ vector (Procedure 031, Word 1). Each recent-disconnect vector would contain a single ‘‘forced disconnect with announcement’’ step that *specifies* the actual tenant called, and provides that tenant’s LDN (e.g., ‘‘You have reached an unworking number of the Jericho Company. For assistance, please call 737-2100.’’)

- Call Coverage to the Attendant Queue

  Call Vectoring can redirect coverage calls to the attendant queue. Attendant coverage can be beneficial for some System 85s. Using this coverage, the attendant group can serve as the final coverage point for an assortment of principals.

  A VDN can be assigned as the final point in a coverage path. One of these VDNs can be assigned to a vector with a single ‘‘route to’’ step. The ‘‘route to’’ step within this coverage vector contains an Abbreviated Dialing list item that outpulses the attendant dial access code [usually ‘‘0,’’ or a DID LDN (Listed Directory Number)].

  Since ‘‘route to’’ steps can direct calls to DID LDNs, partitioned switches can also cover to the *shared* attendant queue. Each extension partition desiring attendant coverage can have a vector that directs calls to the LDN for the attendant partition assigned to that extension partition. In this way, attendant coverage is a partitioned function of the Tenant Services environment.

Vectoring in an ACD (Automatic Call Distribution) Environment

In R2 V4, the initial availability of Call Vectoring, one primary application of this feature is the designing and programming of customized interfaces for calling to ACD splits. The ACD feature (without Call Vectoring) offers a useful calling party interface that includes up to two recorded announcements and optional music for the queued caller.* However, the more flexible and customized calling party interface provided by Call Vectoring can be desirable when:

- The agents in a split answer calls for more than one purpose.

  This need can be addressed by assigning a set of VDNs and/or trunk groups (each controlled by a discrete vector) that terminate to a single ACD queue. Since these VDNs and trunk groups are controlled by different vectors, a unique announcement can be provided for each type of call. In this way, an appropriate announcement can be provided for each of the different types of calling parties.

- A split experiences peak periods of incoming calling activity.

  Vectors can be programmed to provide a variety of calling party interfaces for heavy influxes of calls. For example, these calls can be redirected according to the number of calls in queue or according to the duration of the oldest waiting call. Also, Call Vectoring can limit the number of calls in an ACD queue. When this limit is reached, the switch can either disconnect or return busy tone to the calling party.

- An automatic form of night service is desired for ACD splits.

  A vector can be programmed to provide automatic night service for ACD splits (or the attendant queue). Callers automatically receive a ‘‘night service’’ announcement when these calls are placed while the split is off duty. Otherwise, during normal work hours, calls to the split are processed in a normal and appropriate way. Refer to Vector G, ‘‘Providing Conditional Night Service for the Attendant Queue or an ACD Queue,’’ for an example of this type of vector.

---

* Refer to Table 17-A for a tabular description of this standard interface.

- A split's agents answer emergency calls, and queue limiting is desired.

  During widespread emergencies, incoming calls to emergency numbers produce heavy bursts of calling activity. Meanwhile, more localized emergencies produce a much lower steady volume of calling activity. To address this call-answering scenario, an ACD split (perhaps containing from one to four agents) can be provided to answer these calls. The vector that queues calls to this emergency split can be programmed to encourage callers to hang up when a predefined number of queued calls is reached. The limit would need to be considerably higher than the prevailing steady volume and yet considerably lower than the volumes that could be reached in a widespread emergency. In this way, these agents can routinely handle localized emergencies in an effective manner, and yet not be flooded with unlimited bursts of calls containing information that only repeats a known problem. Refer to Vector B, ''Providing an ACD Split to Handle Emergency Calls,'' for an example of this type of vector.

  Once the specific emergency is known, another vector can be programmed to replace the queue limiting vector. This vector contains a more specific announcement (e.g., ''We are aware of the power outage in Plainfield.'') that assures the caller that his/her specific problem is being addressed. Given this assurance, the caller is more likely to hang up. Refer to Vector C, ''Providing a Specific Emergency Announcement,'' for an example of this type of vector.

  NOTE: Call Vectoring does not currently provide queue limiting for the attendant queue.

- An enhanced form of priority queuing is desired for ACD queues.

  The ACD feature without Call Vectoring provides two levels of priority queuing, but the Call Vectoring feature offers up to four levels of entry to an ACD queue (including AUDIX and Message Center queues). The four levels of entry include: 0 (''low'' priority), 1 (''medium'' priority), 2 (''high'' priority), and 3 (''top'' priority). Using these four levels (selected in Procedure 030, Word 3, Field 6), the switch administrator can give preferential answering treatment to certain incoming calls based on various criteria. These criteria might include: the cost of various trunking facilities, the amount of revenue generated by various calls, and courtesy to executive personnel.

  To implement an ACD queue with four levels of entry, there would usually be four vectors that queue calls to the same split. The ''queue to main split'' step in each vector is assigned a different level of priority from 0 (low priority) to 3 (top priority). In turn, each vector is assigned to a different VDN that is either passed to call-processing in digit form or assigned to an incoming trunk group.

  As a simple example of priority queuing to an AUDIX split, consider this scenario. Three levels of entry are provided to the AUDIX queue using three different VDNs associated with three different vectors. One vector, programmed to queue to AUDIX at Priority 2, has an unrevealed VDN. This VDN is administered as the final coverage point for all of the AUDIX subscribers. Another vector, programmed to queue to AUDIX at Priority 1, has a VDN that is known to the executive AUDIX subscribers. The third vector, programmed to queue to AUDIX at Priority 0, has a VDN that is known to the rest of the AUDIX subscribers. In this way, the highest priority serves to minimize unleft messages. The second and third priorities provide two levels of direct access to AUDIX mailboxes.

  NOTE: Call Vectoring does not currently provide priority queuing for the attendant queue.

Methods of Routing Incoming Calls Into Vector Processing

As previously mentioned, there are two ways to route incoming VDN calls to the System 85 switch. These two methods include:

- Digit-oriented routing

  Using this method, a VDN's digits are passed through the serving switch (usually, the serving Central Office) and to the local System 85 in a manner similar to the way that DID calls are routed. As the VDN's digits are analyzed by the System 85's call-processing software, the dialed number is recognized as a VDN that terminates to a specific vector. In turn, the call-processing software gives control of the incoming call to vector processing.

- Trunk group-oriented routing

  Using this method, a VDN call is recognized by the serving switch (usually, the serving Central Office) as a call that is routed to the local System 85 over a specific trunk group. In turn, the local System 85 accepts the call from over the trunk group, and recognizes this as a call assigned to terminate to a specific VDN. Likewise, this VDN terminates to a specific vector. So far, this method of routing resembles ''non-DID routing'' to the attendant queue, or ''automatic-in routing'' to an ACD split's queue. However, Call Vectoring can add an important element to this linkage. The vector that assumes control of the VDN call can be programmed with a ''route to'' command as the first step in the vector. In this way, an ''automatic-in VDN call'' can terminate to an assortment of destinations that previously could not be accessed using trunk group-oriented routing. These additional destinations include:

  — A specific voice terminal

  — A Host Computer Access trunk group.

Figure 31-2 contains simplified drawings of the alternate routing methods.

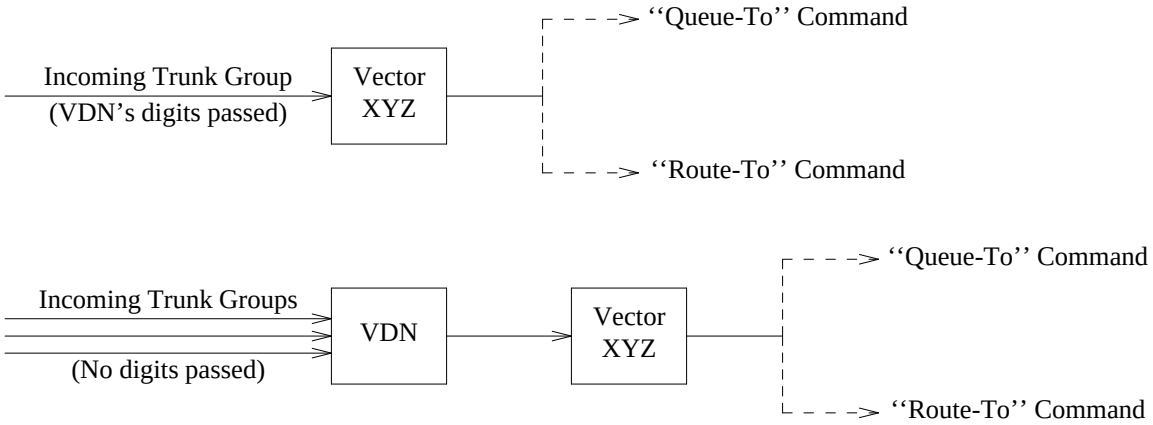

Figure 31-2. Methods of Routing Incoming VDN Calls

DNIS (Dialed Number Identification Service)

In the initial availability of DNIS, ACD agents equipped with a display voice terminal (e.g., 7405D with a display module, 7406D With Display, or 7407D) receive visual displays that specify the dialed number for calls terminating to the agents' voice terminals.

In traditional ACD arrangements, groups of agents are organized into ‘‘splits’’ (functional groups of answering positions). Using this approach, an agent is trained to answer calls for one specific purpose in an efficient and professional manner. However, ACD managers are recognizing the need to relax this concept of limiting each split to a single call-answering task.

The alternative is to provide splits where each group of agents is proficient with several types of calls. The desired gain is to provide adequate service for the several call types with fewer agents and with less administrative intervention by the ACD manager. Using this approach, the changing staffing needs of the several call types are averaged in time, and enough agents are staffed to provide adequate service for the prevailing average load. Where five agents might be needed in each of 3 smaller splits (15-agent total) to handle 3 types of calls, only 11 or 12 agents might be needed in the single (more general) split.

This idea of averaging the call-handling load is sound for certain applications, but the goal of improved agent efficiency is more readily achieved with the DNIS capability. The DNIS function of the Call Vectoring feature allows each answering agent to know the purpose of each incoming call as the call terminates to the agent’s voice terminal. As a result, the natural efficiencies of the single split/single call type arrangement are not compromised. With the calling number display provided by DNIS, agents are aware of each call’s purpose, and can answer each incoming call with the appropriate greeting. Agents need not invest time merely to determine the purpose of calls.

Table 31-A shows sample displays that Call Vectoring DNIS might provide to an ACD agent.

Table 31-1. DNIS Display Information

TYPE OF CALL	DISPLAY
Inside call	a=R JONES to CLAIMS
Outside call	a=OUTSIDE CALL to SALES
ISDN call	a=212-281-7733 to SERVICE

Configuration of Call Vectoring DNIS

Call Vectoring provides a simple and direct means of providing the DNIS functionality. In Procedure 012, Word 1, a discrete and appropriate name is assigned to each VDN and/or trunk group that directs incoming calls to the split’s queue.

Definitions of the Nine Vector Commands

A set of nine vector operations is provided for the Call Vectoring feature. A list of these commands and their definitions follows.

- Queue to main split

  Queue the call to the specified main split at the specified priority. This command is *unconditional*. (After a call is queued, regular ACD software periodically checks the main split’s status to determine whether the split is staffed. If the split is staffed, ACD software periodically scans for an available

agent. If an agent is available, the call at the head of queue is quickly connected to the available agent.) Therefore, if an agent is available at the time a call is queued, regular ACD software quickly distributes the call to the available agent. If no agents are available at the time the call is queued, the caller can immediately begin to advance in queue. If the split is not staffed at the time the call is queued, the Call Vectoring software *still queues* the call, and vector processing moves to the next step.

Multiple ''queue to main split'' commands are allowed in the same vector. However, VDN calls are not allowed to be queued to more than *one split* at a time. When vector processing encounters a second ''queue to main split'' command, the call is removed from the first split's queue and then requeued to the second split. (The second split could actually be the same split as the first.)

- Check backup split

  Check for queuing the call to the specified backup split at the specified priority. This command is conditional. The allowed conditions for overflow include:

  — The number of available agents in the backup split

  — The number of staffed agents in the backup split

  — The number of queued calls in the backup split's queue

  — The amount of time that the oldest call in the backup split's queue has waited to be answered.

  Once the ''check backup split'' command is invoked, the backup split's queue is tested at 2-second intervals until either:

  — The backup split's conditions are met, and the caller is connected to an available agent or queued to the backup split.

  — The call is answered at the primary answering destination.

  — The calling party abandons the call.

  When a call is queued to a backup split, the call is removed from the split's queue where the call may already be queued.

- Route to

  Route the call to:

  — A local extension number

  — The attendant queue

  — The CAS attendant queue

  — A Host Computer Access trunk group

  — Another VDN

  — A remote location (using the AAR, ARS, DCS, or Main/Satellite feature).

  An Abbreviated Dialing group-list item is specified as part of the administration for a ''route to'' command. Whenever the ''route to'' command is executed, the digits stored in the list item are obtained and then used to route the call.

  An extension can be designated as the ''controlling extension'' for the Call Vectoring group list. When this is done, the user of the controlling extension can change the destinations of ''route to'' commands without using the MAAP or SMT.

- Announcement

  Connect the call to a specified recorded announcement.

  An announcement on the 13A announcement set can be up to 24 seconds long. An announcement on the 65270 digital announcer set can be up to 16 seconds long. The effective announcement length of either announcement set can be increased by programming a vector with two or more announcement steps in sequence. However, these ‘‘chained announcements’’ are subject to a delay between successive announcements in the chain. Each delay can be as long as 3 seconds plus the duration of the following announcement. Therefore, when an announcement is chained, the provided message should be understandable with substantial pauses.

  If answer supervision has not already been returned for an incoming call, this signal is sent to the serving switch just before vector processing executes an ‘‘announcement’’ step.

  Based on time-slot and TMS-blockage considerations, as many as 255 callers per module can listen to the same recorded announcement at the same time.

- Delay

  Delay vector processing for a specified number of seconds (while the calling party hears silence, ringback, or music).

  If answer supervision has not already been returned for an incoming call, this signal is sent to the serving switch just before vector processing executes a ‘‘delay *with music*’’ step.

  The allowed values for delay intervals are even numbers between 2 and 998 (in seconds).

  If the ‘‘delay’’ step is a *final effective step** of the vector, the audible tone (i.e., ringback or music) can continue beyond the specified duration. For these ‘‘delay’’ steps, ringback or music would continue until the call is either answered or abandoned.

  For calls routed to vectors from over CO trunks, the calling party hears the initial ringback from the Central Office (not from vector processing). However, the best idea is to design and program vectors as if the calling-party feedback were always provided by the vectors. In this way, every vector can be more generally applied. When a vector is programmed to provide ringback that is actually provided by the CO, no harm is done. The time slot’s ringback is merely ignored by the CO. But now, this same vector can be applied, for example, to internal calls and DID trunks.

- Go to step

  Go to another step in the vector. After branching, vector processing continues at the designated step. This operation can provide either conditional or unconditional branching.

---

* A ‘‘final effective step’’ of a vector is either the last vector step or a vector step that is followed by a ‘‘stop’’ step.

When conditional, the allowed conditions for branching include:

— The time of day

— The number of available agents in the specified or default split

— The number of staffed agents in the specified or default split

— The number of queued calls in the specified or default split's queue

— The amount of time that the oldest call in the specified or default split's queue has waited to be answered.

> **NOTE:** The default split (i.e., no split is specified) is always taken as the one the call is currently queued to.

- Forced disconnect

Disconnect the calling party from the switch. (An optional disconnect announcement is available.)

Without optional announcement

If answer supervision was not previously returned for an incoming call, the answer supervision signal is first sent to the serving switch and then the call is immediately disconnected. This operation is necessary because switching systems cannot disconnect calls that have not been ''answered.'' Therefore, incoming toll calls to which this disconnect operation is applied are billed the minimum applicable charge. The customer is billed for these calls from over 800 Service trunks. The individual calling parties are billed for each call using the other trunk types.

With optional announcement

If answer supervision has not already been returned for an incoming call, this signal is sent to the serving switch just before vector processing executes the announcement option.

- Forced busy

Return busy tone to the calling party (except with automatic CO trunks).

Answer supervision is *not* returned as this step is executed.

- Stop

Stop vector processing (of additional steps) for this call.

If the call is queued to a split, the call remains in the queue. If a ''check backup split'' command was previously executed, scanning continues for the call. If a ''delay'' step is active when the ''stop'' step is encountered, the specified delay treatment (i.e., music, silence, or ringback) continues until the call is either answered or abandoned.

Table 31-B shows the success and failure criteria for each of the nine vector commands.

Table 31-2. Criteria for Success/Failure of Vector Commands

COMMAND	SUCCEED/FAIL CRITERIA	VECTOR PROCESSING DISPOSITION
Queue to main split	Always succeeds.	Continue vector processing with next sequential step.
Check backup split	Always succeeds.	Continue vector processing with next sequential step.
Route to*		
ATTENDANT	Always succeeds.	Exit vector processing. Pass control to processing for attendant queue.
CAS	Always succeeds.	Exit vector processing. Pass control to CAS processing.
VDN	Fails if call would route to the *same* vector.	If final effective step in vector, treat this step as a ‘‘stop’’ step. Otherwise, continue vector processing with next sequential step.
	Fails if routed-to VDN does not terminate to a vector.	If final effective step in vector, treat this step as a ‘‘stop’’ step. Otherwise, continue vector processing with next sequential step.
	Otherwise, succeeds.	Exit previous vector processing. Pass control to new vector.

* Tenant Services partitioning checks are made.

COMMAND	SUCCEED/FAIL CRITERIA	VECTOR PROCESSING DISPOSITION
Route to* (Contd)		
EXTENSION	Fails if extension is active.	If final effective step in vector, check for an idle appearance, idle forwarding destination, or idle hunt-group destination. Step is retried at 2-second intervals. Otherwise, continue vector processing with next sequential step.
	Otherwise, succeeds.	Exit vector processing. Pass control to call processing.
OFF-SWITCH	Fails due to a resource failure (e.g., no Originating Register or no trunks).	If final effective step in vector, retry at 2-second intervals. Otherwise, continue vector processing with next sequential step.
	Otherwise, succeeds.	Exit vector processing. Pass control to call processing.
OTHER	Fails due to unknown destination.	If final effective step in vector, treat this step as a ‘‘stop’’ step. Otherwise, continue vector processing with next sequential step.
Announcement	Always succeeds.	Pass control to announcement software.
Delay	Always succeeds.	Pass control to delay timer.
Go to step	Fails if step condition is not met.	Continues vector processing with next sequential step.
	Succeeds if step condition is met.	Continues vector processing with the destination step.
Forced disconnect	Always succeeds.	Conditionally under control of announcement software. Then, exit vector processing, and pass control to call processing.
Forced busy	With a CO trunk, fails if answer supervision has not already been returned.	Continue vector processing with next sequential step.
	Otherwise, succeeds.	Exit vector processing, and pass control to call processing.
Stop	Always succeeds.	Exit vector processing. Control is passed to ACD scanning if caller is queued to split.

* Tenant Services partitioning checks are made.

Fundamentals of Designing and Programming Vectors

Designing and programming vectors is a fairly straightforward process. The Call Vectoring ''programming language'' provides three basic types of ''control flow'' to pass vector-processing control from one vector step to another.

- Serial flow

  Serial flow passes vector-processing control from the current vector step to the following step.

- Conditional branching

  When the vector's condition is met, conditional branching (e.g., go to step 8, if T.O.D. between 5:00 p.m. and 7:00 a.m.) passes control from the current vector step to the specified vector step (in this example, Vector Step 8). If not, control is passed to the following step. This example of conditional branching appears in Vector G: ''Providing Conditional Night Service for the Attendant Queue or an ACD Queue.'' Other examples of conditional branching also appear in the sample vectors.

- Unconditional branching.

  Unconditional branching (e.g., go to step 2) always passes control from the current vector step to the specified vector step (in this example, Vector Step 2). This example of unconditional branching appears in Vector K: ''Providing a Repeated Delay Announcement.'' As used in that vector, the unconditional branch establishes an apparent ''endless loop'' between the final step (go to step 3) and Step 3 that has the effect of repeating a recorded announcement. The loop, however, isn't really endless. Normally, vector processing would stop when an agent answers the call. On most other occasions, vector processing would stop when the System 85 has recognized that the calling party has abandoned the call. Otherwise, in a ''permanent seizure'' condition, a set of timers and counters (with threshold values) is used by the Call Vectoring feature to decide when the call's facilities should be automatically disconnected.

  Other examples of unconditional branching also appear in the sample vectors.

Sample Applications of Vectoring

A. Limiting an ACD Queue
   1. go to step 4, if more than 7 calls are queued to split 15
   2. queue to main split 15 at low priority (Split 15 contains perhaps eight agents.)
   3. stop
   4. forced disconnect with announcement 17 (''Every line is busy. Please call back later.'')

B. Providing an ACD Split to Handle Emergency Calls
   1. queue to main split 9, at low priority (Split 9 contains from one to four agents.)
   2. go to step 4, if more than 30 calls are in queue
   3. stop
   4. announcement 20 (''We are aware of the wide-spread situation. Efforts are being taken to rectify the problem. If your call is not urgent, please call back later. If it is, please wait. Your call will be answered as soon as possible.'')

C. Providing a Specific Emergency Announcement

1. queue to main split 9 at low priority (This is the same split as in the previous vector.)
2. announcement 99 (''We are aware of the power outage in Plainfield. If you still need help, please wait.'')
3. delay 300 seconds with music
4. stop

D. Providing a Forced Announcement to Handle Emergency Calls

1. announcement 21 (''We are aware of the current situation. Efforts are being taken to rectify the problem. If your call is not urgent, call back later.'')
2. delay 6 seconds with music
3. queue to main split 9 at low priority
4. delay 200 seconds with music

E. Providing a Forced Announcement for the Attendant Queue

1. announcement 21 (''We are aware of the current situation. Efforts are being taken to rectify the problem. If your call is not urgent, call back later.'')
2. delay 8 seconds with music
3. route to 3400 (LDN to access the attendant queue)

F. Basing Delay Intervals on the Number of Calls in an ACD Queue

1. queue to main split 6 at low priority (Split 6 contains perhaps 16 members)
2. go to step 5, if more than 16 calls in queue
3. go to step 6, if more than 8 calls in queue
4. go to step 7
5. delay 6 seconds with ringback
6. delay 6 seconds with ringback
7. delay 16 seconds with ringback
8. announcement 16 (''Our agents are busy. Please wait. Calls are being answered in their order of arrival.'')
9. stop

G. Providing Conditional Night Service for the Attendant Queue or an ACD Queue

1. go to step 8, if T.O.D. between 5:00 p.m. and 7:00 a.m.
2.
3.
4. (Steps 2 through 7 represent vector processing during work hours.)
5.
6.
7. stop

8. route to 3300 (VDN to access a common vector for the night announcement)

H. Providing the Night-Service Announcement

1. announcement 19 (‘‘We are closed for the evening. Please call back between the hours of 7:00 a.m. and 5:00 p.m.’’)
2. forced disconnect

I. Using AUDIX to Provide Night Service for Message Center

1. go to step 8, if T.O.D. between 4:30 p.m. and 7:30 a.m.
2. queue to main split 47 at high priority (Split 47 is the Message Center split.)
3. delay 18 seconds with ringback
4.
5. (Steps 2 through 7 represent vector processing for Message Center.)
6.
7. stop
8. queue to main split 54 at high priority (Split 54 is the AUDIX split.)
9. delay 14 seconds with ringback
10.
11. (Steps 8 through 13 represent vector processing for AUDIX.)
12.
13.

J. Providing an Information Announcement for Callers

1. forced disconnect with announcement 25 (‘‘Today has been declared a snow day. Please report for work tomorrow at 8:00 a.m.’’)

or

1. announcement 26 (‘‘This factory is closed for the Christmas holidays. We will reopen on Tuesday, January 6. Please call back after this date.’’
2. forced disconnect

K. Providing a Repeated Delay Announcement

1. queue to main split 53 at low priority
2. delay 30 seconds with ringback (The duration of a ring cycle is approximately 5.2 seconds.)
3. announcement 16 (‘‘Our agents are busy. Please wait. Calls are being answered in their order of arrival.’’)
4. delay 20 seconds with music (or silence)
5. go to step 3

L. Providing Conditional Intraflow for an ACD Split

1. queue to main split 21 at medium priority

2. go to step 4, if oldest call in main split's queue has waited more than 45 seconds
3. stop
4. check backup split 22, queue if less than 5 calls in backup split's queue **NOTE:** This version of ''conditional intraflow'' differs from the ACD version. This Call Vectoring algorithm diverts the *newest call* (not necessarily the last call) in queue, whereas the ACD version diverts the *first call* (not necessarily the oldest call) in queue.

M. Providing Unconditional Intraflow for an ACD Split

1. go to step 5, if there are no staffed agents
2. queue to main split 21 at medium priority
3. delay 30 seconds with ringback
4. stop
5. route to 3500 (VDN of another local ACD split)

   NOTE: This version of ''unconditional intraflow'' can be used when an ACD split is inactive. However, this version is slightly different from the standard ACD version. This version automatically activates after every agent enters the *unstaffed* mode, whereas the ACD version is activated by the split supervisor.

N. Scanning Multiple Backup Splits

1. queue to main split 37 at low priority (Split 37 contains perhaps 30 agents)
2. go to step 4, if the number of staffed agents is less than 16
3. stop
4. check backup split 11, queue at low priority if more than 1 available agent*
5. check backup split 12, queue at low priority if more than 1 available agent
6. check backup split 13, queue at low priority if more than 1 available agent

O. Combining the Conditions of ''Check Backup Split'' Commands

1. queue to main split 56 at medium priority (Split 56 contains perhaps 10 agents)
2. check backup split 57, queue at high priority if main split has less than 2 staffed agents
3. check backup split 57, queue at high priority if the oldest call in main split's queue has waited more than 34 seconds
4. delay 10 seconds with ringback†

P. Gracefully Closing an ACD Split

---

* Multiple ''check backup split'' commands should be programmed in descending order of preference. Usually, when the conditions of more than one ''check backup split'' command are met, the call queues to the **first split** in the sequence that meets the conditions [in this case, Split 11 (or 12)].

† Since this ''delay'' step is the **final effective step** of the vector, the audible tone (in this case, ringback) can continue for more than 10 seconds. Ringback continues until the call is either answered or abandoned. (Actually, the processor occupancy would be **lower** if the ''10'' were changed to ''2,'' and this final effective step would have the **same** effect.)

1. go to step 13, if T.O.D. between 4:00 p.m. and 8:00 a.m.
2. queue to main split 52 at low priority
3. go to step 8, if T.O.D. between 3:56 p.m. and 4:01† p.m.
4. delay 20 seconds with ringback
5. announcement 16 (‘‘Our agents are busy. Please wait. Calls are being answered in their order of arrival.’’)
6. delay 10 seconds with music
7. stop
8. announcement 22 (‘‘It is nearly 4:00, closing time for this office. We are trying to serve your call. If we can’t, please call back between 8:00 and 4:00, Monday through Saturday.’’)
9. delay 6 seconds with music
10. go to step 12, if T.O.D. between 4:00 p.m. and 4:15‡ p.m.
11. go to step 9
12. forced disconnect with announcement 23 (‘‘We are sorry. This office has closed. To be assured of service, please call back between 8:00 and 3:45 Monday through Saturday.’’)
13. forced disconnect with announcement 24 (‘‘Please call back during business hours: 8:00 to 4:00, Monday through Saturday.’’)

Q. Example of a Chained Vector for ACD

1. queue to main split 59 at low priority (Split 59 contains perhaps 25 agents.)
2. go to step 15, if D.O.W. is Saturday or Sunday /* Branch for weekends */
3. go to step 15, if T.O.D. between 4:30 p.m. and 7:30 a.m. /* Branch for evenings */
4. go to step 12, if more than 35 calls in main split’s queue /* Branch when severely overloaded */
5. go to step 10, if oldest call in main split’s queue has waited more than 36 seconds /* Intraflow - mild overload */
6. delay 30 seconds with ringback /* Normal processing for queue 59 */
7. announcement 16 (‘‘Our agents are busy. Please wait. Calls are being answered in their order of arrival.’’)
8. delay 20 seconds with music (or silence)
9. go to step 7
10. check backup split 1, queue at low priority if less than 10 calls in backup split’s queue

---

† The upper time boundary is set to 4:01 to ‘‘trap’’ the occasional calls that cross the previous 4:00 boundary.

‡ This upper boundary is rather arbitrary. Consider, however, that this 15-minute interval is considerably longer than the combined duration of Steps 8 and 9.

11. go to step 6
12. announcement 17 (‘‘Every line is busy. Please call back later.’’)
13. forced busy
14. stop
15. route to VDN 3307 (‘‘3307’’ is a VDN to access the continuation vector.)

Continuation Vector

1. announcement 18 (‘‘Please call back during business hours: 7:30 to 4:30, Monday through Friday.’’)
2. forced disconnect

USER OPERATIONS

To Verify a Recorded Announcement

An ACD split supervisor should:

- Go off-hook on an idle appearance. [Dial tone]
- Dial the Announcement Verify access code, or press the VERIFY ANNCT button (an Abbreviated Dialing button with the Announcement Verify access code as the stored number). [Second dial tone]
- Dial the 2-digit announcement number (e.g., 08).
- Listen to the announcement.
- Go on-hook, or press the RELEASE button.

To Extend an Attendant Call to a Vector Directory Number

An attendant should:

- Press the ANSWER button. [Talking connection between the attendant and the calling party]
- Press the START button. [The switch returns dial tone and places the calling party in soft hold.]
- Dial the vector directory number. [The switch returns ringback tone to the attendant.]
- Press the RELEASE button *within 4 seconds*. [Vector processing begins for the calling party.]

  NOTE: If the attendant does not release within 4 seconds, the switch will complete the call to an idle answering destination. If an available answering destination is not found, the switch will return reorder tone to the attendant.

A centralized attendant should:

- Press the ANSWER button. [Talking connection between the centralized attendant and the calling party]

- Press the START button. [The switch returns dial tone and places the calling party in soft hold.]
- Dial the vector directory number. [The switch returns ringback tone to the centralized attendant.]
- Press the RLT RELEASE button *within 4 seconds*. [Vector processing begins for the calling party.]

> **NOTE:** If the centralized attendant does not release within 4 seconds, the switch will complete the call to an idle answering destination. If an available answering destination is not found, the switch will return reorder tone to the attendant.

CONSIDERATIONS

Switch Capacity

System 85 software allows for as many as 128 vectors to be defined within the switch.

Each vector can contain as many as 15 call-processing steps. This 15-step maximum can be exceeded by ‘‘chaining’’ two or more vectors together. This is done by programming a ‘‘route to VDN’’ step as the final step in each vector (except the last vector in the chain). The ‘‘route to VDN’’ step serves as the ‘‘link’’ between successive vectors. The VDN specified in the ‘‘route to VDN’’ step of a vector is administered to *terminate to* the next vector in the chain. In this way, two chained vectors could provide as many as 29 effective call-processing steps. Three chained vectors could provide as many as 43 [i.e., 15n – (n – 1)] effective call-processing steps.

> **NOTE:** When ‘‘route to VDN’’ steps are used to chain vectors, these commands are not allowed to route calls back to the same vector. When this is attempted, vector processing ignores the request, and continues processing with the next vector step. If the ‘‘route to VDN’’ step is the last step in the vector (or immediately followed by a ‘‘stop’’ step), vector processing treats this ‘‘route to VDN’’ step as a ‘‘stop’’ step.
>
> To repeat execution of the same vector, use the command ‘‘go to step 1.’’ This command has a similar effect to the disallowed ‘‘route to’’ command, and uses less call-processing time.
>
> **NOTE:** When ‘‘route to VDN’’ steps are used to chain vectors, vector processing *stops* for the first vector, and then vector processing *assumes control* of the continuation vector. As a result of this discontinued processing for the first vector, calls are removed from any queue they are in, and any scanning (at 2-second intervals) invoked by a ‘‘check backup split’’ command also stops. Therefore, whenever a call should be queued or whenever scanning should proceed in the continuation vector, the ‘‘queue to main split’’ *and* ‘‘check backup split’’ step(s) *must be repeated* as steps in the continuation vector.

As many of the 128 vectors as desired can terminate to the same answering destination.

Each vector can be assigned to as many VDNs as desired, and each VDN can be assigned to as many of the 982 administrable trunk groups as desired.

As many as 84 SN231 recorded announcement trunks (numbers 16 through 99) can be assigned for use with Call Vectoring. The Intercept Treatment feature also uses recorded announcement trunks. The first 15 recorded announcements are reserved for the Intercept Treatment feature.

Recorded Announcement Limit

Based on time-slot and TMS-blockage limitations, as many as 255 callers per module can listen to the same recorded announcement at the same time. In practice, the limit is considerably lower.

The Call Vectoring software adds calling parties who are waiting for an announcement to an unlimited ''waiting queue.'' Between announcement cycles, the calls at the head of the waiting queue are moved to a ''listening queue.'' This software can move up to 144 callers to the listening queue before the beginning of the next announcement, but will continue to add parties after the announcement begins. In the worst case, the 255th caller would not hear the first 1.4 seconds of this announcement.

If more than 144 calling parties are routinely being added to the same listening queue, consider reengineering the ACD configuration.

Call Vectoring in an ACD Environment

When the Call Vectoring feature is enabled in an ACD environment, some of the basic ACD functionality is disabled. The disabled ACD functionality includes:

- Associating splits with trunk groups
- Routing calls to ACD splits using associated extension numbers
- Providing the first delay recorded announcement for a split
- Providing the second delay recorded announcement for the switch
- Providing intraflow from a split's queue via the Call Forwarding feature
- Providing interflow from a split's queue via the Overload Balancing function or the Call Forwarding feature
- Specifying a split number (from 1 to 60) as the final point in a coverage path.

The Call Vectoring feature provides an alternate method for implementing these functions, and if desired, vectors can be administered to emulate the disabled ACD functionality.

''Scratch-Pad'' Vector Administration

Vectors can be administered while the switch is actively processing calls. However, once a vector assumes control of processing for a specific call, that vector cannot change until processing for the call is finished.

When a vector is modified, System 85 enters a transitional phase of vector processing. During the transition, the switch accepts the new vector as a ''temporary vector,'' and immediatedly applies this vector to every new call that accesses the vector. Meanwhile, the old ''permanent vector'' still controls processing for every call that accessed the vector before the modification. After the switch finishes processing these ''old calls,'' the old vector is replaced with the new vector as the new ''permanent vector.''

Special Function Characters and ''Route To'' Commands

When an Abbreviated Dialing list item for Call Vectoring is programmed, the special function characters (e.g., pause, wait, and mark) *must not* be used. The ARS and AAR features automatically handle the timing to complete these calls. So, only the digits for a ''route to'' destination should be programmed.

If special characters *are* programmed into a Call Vectoring group-list item, then the ‘‘route to’’ command that uses the list item will fail.

Adjunct Machine Numbers

At most, each vector can point to *one* Message Center AP *and one* AUDIX adjunct. Therefore, vectors with multiple ‘‘queue to main split’’ or ‘‘check backup split’’ commands should be carefully programmed.

As an example, it is legal to queue to a Message Center split on one AP. It would also be legal to check several backup Message Center splits that correspond to the *same* AP. However, Procedure 030, Word 3 would return an administration error if one or more of the vector’s ‘‘check backup split’’ commands pointed to a split on a different AP.

As another example, it is legal to queue to the AUDIX split corresponding to one AUDIX adjunct. It is also legal to base a conditional branch on the status of that queue. However, Procedure 030, Word 3 would return an administration error if the vector tried to overflow calls to a different AUDIX adjunct’s split.

However, as previously shown in Vector I, it is legal to provide automatic night service for a Message Center split by redirecting calls to an AUDIX split after hours. Vector I reaches the limit by pointing to one AP *and* one AUDIX adjunct.

Testing the Vectors

Customers are encouraged to use creativity in designing vectors that fully address an individual switch’s needs. However, vector processing is a powerful software tool that, without exercising due caution, could produce highly undesirable and unexpected results in response to an ill-conceived or misprogrammed vector. It is strongly recommended that every vector (especially vectors with untried sequences of steps) be fully tested before they are placed in control of actual call processing or written to permanent translation on the HCMR tape.

To facilitate vector testing, one VDN, one vector, and a few answering destinations of each type can be reserved for testing purposes. The logic within this test vector (perhaps, Vector 128) should be identical to the logic in the planned vector. However, the conditional parameters (e.g., greater than 30 calls in queue) can be relaxed to simplify the testing process. In this way, the logic of Vector 128 can be tested to ensure effective and sane results. After a successful test phase, the conditional parameters in Vector 128 are set to the desired values, and then Vector 128 is copied to another vector number. (At this point, Vector 128 can be removed.) In turn, the new duplicate vector is assigned to the VDN planned for use in actual call processing.

‘‘Route To’’ Steps and CMS Measurements

As a call to an ACD split is acted upon by a ‘‘route to’’ step within a vector, the call’s identity within the switch changes. This call is no longer recognized as an ACD call, and the switch sends the final message to the CMS for this call. Therefore, once processed by a ‘‘route to’’ step, calls are no longer captured on the CMS measurement reports. (However, ‘‘route to VDN’’ steps are *recaptured* in the CMS measurements once vector processing is reinitiated.)

Final ‘‘Delay’’ Steps

The last ‘‘delay’’ step in a vector can be timed by vector processing for any even value between 2 seconds and 998 seconds. For *any* value chosen, the calling party hears the programmed audible feedback (ringback or music) beyond the delay timing until the call is either answered or abandoned.

Therefore, setting the delay interval to 2 seconds can be a good idea. In this way, the vector

processing finishes as quickly as possible with no interruption to the ringback or music. This strategy has the benefit of conserving processor occupancy for the switch.

However, setting this delay interval to 2 seconds can also change the meaning of the CMS statistic ‘‘Total Time in Vector.’’ As the final 2-second timing elapses for each call, the switch sends a message to the CMS indicating that vector processing has finished. So, vector processing can *finish* before an answering destination actually *answers* a call. In the CMS environment, it might be more desirable to ensure that the ‘‘Total Time in Vector’’ accurately reflects the amount of time for answering each VDN call. If so, set the timing for final ‘‘delay’’ steps to a much higher value.

Permanent Seizure Counters and Timers

To help the switch recover from permanent trunk seizures, the Call Vectoring software contains three counters. For VDN calls *from over incoming trunks*, one or more of these counters is invoked to limit the duration of permanent seizure conditions. These counters include:

- ‘‘Route To’’ Retry Counter

  While a final effective ‘‘route to’’ step is being retried, this counter’s task is invoked at 5-minute intervals. After the counter has incremented 8 times (approximately 40 minutes), the switch assumes a permanent seizure condition and tears down the connection.

- ‘‘Check Backup Split’’ Command Counter

  During vector processing, this counter keeps track of the number of times that a ‘‘check backup split’’ command has been executed. After the counter has incremented 1000 times (2000 seconds for 1 ‘‘check backup split’’ command, 1000 seconds for 2 ‘‘check backup split’’ commands), the switch assumes a permanent seizure condition and tears down the connection.

- ‘‘Go To Step’’ Command Counter

  During vector processing, this counter keeps track of the number of times that a ‘‘go to step’’ command has been executed. After the counter has incremented 1000 times, the switch assumes a permanent seizure condition and tears down the connection. (This is the counter that prevents ‘‘endless loops.’’)

The Call Vectoring software also contains two 20-second timers to minimize permanent trunk seizures. These timers include:

- ‘‘Forced Busy’’ Command Timer

  Each time a vector executes a ‘‘forced busy’’ command on an incoming trunk call, this timer is invoked. After 20 seconds elapse, the switch checks the trunk connection. If the connection is still active, the switch assumes a permanent seizure condition and tears down the connection.

- ‘‘Forced Disconnect’’ Command Timer

  Each time a vector executes a ‘‘forced disconnect’’ command on an incoming trunk call, this timer is invoked. After 20 seconds elapse, the switch checks the trunk connection. If the connection is still active, the switch assumes a permanent seizure condition and tears down the connection.

Logical Patterns to Avoid

A ‘‘go to step’’ command should **never** direct vector processing to itself. As an example, consider this vector sequence that could have occurred by *adding* Steps 2 and 3 to an old vector.

1. queue to main split 46 at priority 0
2. check backup split 47, queue if less than 7 calls in split 47’s queue
3. check backup split 48, queue if less than 7 calls in split 48’s queue
4. go to step 4, if time of day is between 5:00 p.m. and 8:00 a.m.
5. stop
6. route to (a night service destination)

In addition to the logical problem caused by Step 4, this command causes a *severe* problem for vector processing*. Step 4 does nothing but consume vast amounts of switch processor time. This command would consume 6 milliseconds per calling party per second.

This same ill effect can also be consciously programmed by ‘‘daisy chaining’’ ‘‘go to step’’ commands†. The following sequence is an example.

1. go to step 2
2. go to step 3
3. go to step 1

Since ‘‘check backup split’’ commands are heavy consumers of switch processor time, excessive use of these commands should be avoided. Each ‘‘check backup split’’ command consumes 1/2 millisecond of processor time per calling party per 2-second interval. So, *one* of these commands making checks for *400* calling parties would increase processor occupancy by approximately 10 percent. Or, *two* commands making checks for *200* calling parties would also increase processor occupancy by about 10 percent. Likewise 800 caller-checks would increase processor occupancy by about 20 percent.

Limited Integrity Checks

Before accepting a vector to permanent memory, administration software performs three limited integrity checks on each programmed vector. However, these integrity checks do not substitute for thorough vector testing. The checks include:

- Ensuring that the destination step of every ‘‘go to step’’ command exists in the vector
- Ensuring that every time-of-day branch has both a starting time and an ending time
- Ensuring that if the *start time* of a time-of-day branch is programmed as ‘‘every day,’’ then the *end time* is also programmed as ‘‘every day’’ (and vice versa).

Hard and Soft Processor Swaps

Stable VDN calls will endure a hard processor swap.

---

* At the time of this writing, an integrity check is planned to ensure that a ‘‘go to step’’ command does not direct vector processing to itself.

† An integrity check is not planned to prevent daisy chaining.

Permanent vectors are stored in a translation portion of switch memory. Therefore, these vectors will endure a hard processor swap.

Transition vectors are stored in a translation portion of switch memory. Therefore, these vectors will endure a hard processor swap.

The unwritten scratch-pad vector is stored in a status portion of switch memory. Therefore, these vector statements are lost during a hard processor swap.

The contents of the Abbreviated Dialing group list for Call Vectoring are stored in a translation portion of switch memory. Therefore, these ‘‘route to’’ destinations will endure a hard processor swap.

Vector processing is disrupted during a hard processor swap. For example, VDN calls are removed from queue, check-backup-split scanning ceases, and the switch buffer for CMS messages is cleared.

The Call Vectoring feature operates normally during a soft processor swap.

INTERACTIONS WITH OTHER FEATURES

Abbreviated Dialing

In addition to the System List which is authorized separately, the Abbreviated Dialing feature permits voice terminal users to access a maximum of two Abbreviated Dialing lists: two group lists, two personal lists, or one group list and one personal list. The vector-group list counts as one of these two lists. Therefore, if a voice terminal user is designated as the controller of the vector-group list, the controller can only have access to one other personal or group list.

If the vector-group list controller shares Abbreviated Dialing with a data terminal, both the voice and data terminal must use the same personal or group list for Abbreviated Dialing. Normally this will not pose a problem as that list can contain up to 95 entries. To help keep voice terminal and data terminal list entries separate, it is recommended that this list be allowed the full 95 members and that one terminal use only the low-order entries (01 to 49) and the other terminal use only the high-order entries (50 to 95).

Call Vectoring group-list items *must not* contain special function characters (e.g., pause, wait, and mark). The ARS and AAR features automatically control the timing for routing calls to the destinations of ‘‘route to’’ commands.

Attendant Control of Trunk Group Access

If vector processing encounters a ‘‘route to’’ step where the call would route over a trunk group that is currently controlled by the attendant, the ‘‘route to’’ step is not executed. Instead, if the ‘‘route to’’ step is the final effective step in the vector, the switch treats the ‘‘route to’’ step as a ‘‘stop’’ step. If vector steps follow the ‘‘route to’’ step, vector processing continues with the next sequential step.

Attendant DXS (Direct Extension Selection) With BLF (Busy Lamp Field)

An attendant can use the appropriate DXS buttons to place or extend calls to a VDN. However, since a VDN's associated vector is never really ''busy,'' the BLF lamps adjacent to these DXS buttons are never lit.

Attendant Display

When Call Vectoring redirects coverage calls to the attendant queue, the attendant who answers the redirected call receives the usual Calling Party Identification on the alphanumeric display. The called principal's identification is not provided.

AUDIX (Audio Information Exchange)

A vector can have a ''queue to main split'' step or a ''route to'' (AUDIX extension number) step that routes calls to an AUDIX split. However, if the DCIU link is down or if every voice port to that AUDIX is unstaffed, these calls are not directed to the AUDIX queue. Instead, the switch returns reorder tone to the calling party.

AAR (Automatic Alternate Routing)

In Procedure 010, Word 3, an FRL (Facilities Restriction Level) is assigned to VDNs for use with the ''route to'' command. The FRL of a VDN is used to determine whether the call is allowed to route over available private network facilities.

ACD (Automatic Call Distribution)

When Call Vectoring is enabled in an ACD environment, the abandon call search function operates normally. During any step of the call-processing for incoming calls provided by a vector, the check for abandoned calls is performed just before ringing an idle agent. The switch only distributes the call to an agent when the trunk is found active at the CO (Central Office).

When Call Vectoring is enabled in an ACD environment, the queue-status display function operates normally. These agents receive the full queue-status information as each ACD call is received. These agents can also manually update the display information using the NORMAL MODE button.

When Call Vectoring is enabled in an ACD environment, the multiple call handling function operates normally. When an agent receives a distributed call that was processed by a vector, the agent can place the call on hold and remain available to receive another call that is distributed from the split's queue.

When Call Vectoring is enabled in an ACD environment, queue warning lamps can still be provided. (The warning lamp threshold for each split is still assigned in Procedure 026, Word 1, Field 5.) However, the

meaning of lamp activity on the 30A8 is slightly modified. The appropriate lamp still lights when the number of calls in the split's queue is greater than or equal to the assigned threshold. With Call Vectoring assigned, however, the assigned queue warning threshold *can be a different value* than the parameter(s) within the vector itself that actually divert calls to alternate destinations.

Automatic Callback

The switch denies activation of Automatic Callback toward a VDN. When this is attempted, the switch returns intercept tone to the activating party.

Whenever a ''forced busy'' step in a vector returns busy tone to a calling party, the switch denies activation of Automatic Callback in response to the busy tone. When this activation is attempted, the switch returns intercept tone to the calling party.

ARS (Automatic Route Selection)

In Procedure 010, Word 3, an FRL is assigned to VDNs for use with the ''route to'' command. The FRL of a VDN is used to determine whether the call is allowed to route over available public network facilities.

The ARS Toll Restriction does not limit the routing of ''route to'' steps to destinations outside the switch. If ARS Toll restriction is assigned to a VDN's class of service, this assignment is ignored.

Busy Verification of Lines

An attendant is not allowed to activate busy verification toward a VDN. When this is attempted, the switch returns intercept tone to the attendant.

Call Coverage

A vector directory number can be assigned as the final point in a coverage path. When this is done, the full flexibility of the Call Vectoring feature can be applied to the redirected call. The corresponding vector could be programmed to queue the redirected call to an ACD split (including an AUDIX or a Message Center split). Furthermore, the vector's processing could also vary by time of day (to provide night service) or by the status of the split's queue (to provide intraflow or interflow).

When a VDN is assigned as the final point in a coverage path, a principal's temporary bridged appearance is removed at the time that vector processing assumes control of a redirected call.

A vector can have a ''route to'' step that routes calls to an extension with coverage assigned. When this is done, the destination extension's coverage is ignored.

Call Forwarding—Busy and Don't Answer

The Call Forwarding—Busy and Don't Answer feature cannot be used to forward calls to a VDN.

With Call Vectoring assigned, an ACD split supervisor can use this feature to forward calls for the supervisor's individual extension. Without Call Vectoring assigned, Call Forwarding—Busy and Don't Answer is instead used to forward calls which are directed to the split's queue.

Call Forwarding—Don't Answer

The Call Forwarding—Don't Answer feature cannot be used to forward calls to a VDN.

With Call Vectoring assigned, an ACD split supervisor can use this feature to forward calls directed to the supervisor's individual extension. Without Call Vectoring assigned, Call Forwarding—*Busy and Don't Answer* is instead used to forward calls which are directed to the splits queue. (This is true even if Call Forwarding—Don't Answer is assigned to the supervisor's class of service.)

Call Forwarding—Follow Me

The Call Forwarding—Follow Me feature can be used to forward calls to a VDN. When this is done, the forwarded-to vector controls call processing for the forwarded call. For example, the call could enter an ACD split's queue (including AUDIX or Message Center) and be processed according to the vector's programming.

With Call Vectoring assigned, an ACD split supervisor can use this feature to forward calls for the supervisor's individual extension. Without Call Vectoring assigned, Call Forwarding—Follow Me is instead used to forward calls which are directed to the split's queue.

Call Waiting

If a single-appearance terminal is the destination of a ''route to'' command, an incoming call will not wait on the terminal. Instead, if the ''route to'' command is the last vector step, vector processing will attempt to redirect the call to an idle forwarding destination or coverage point. This final vector step is retried at 2-second intervals. If the ''route to'' command is not the last vector step, vector processing will continue with the next sequential step.

CAS (Centralized Attendant Service)

A centralized attendant is allowed to extend calls to a VDN. When this is done, the switch returns ringback tone to the attendant. At this time, the centralized attendant should release the call and return to other activity. If the centralized attendant does not release within 4 seconds, the switch will complete the call to an idle answering destination. If an idle answering destination is not found, the switch will return reorder

tone to the attendant.

A centralized attendant is not allowed to place direct calls to a VDN over an RLT (Release Link Trunk). When this is attempted, the switch returns intercept tone.

Vector processing is not available for incoming calls to backup voice terminals at a branch location. Entering a VDN in Procedure 211, Word 2 as the extension number of a backup voice terminal is not allowed. When this is attempted, an administration error will occur.

Conference—Three Party

A multiappearance voice terminal user on a 2-party call is allowed to add the recipient of a VDN call to a 3-party conference. However, the second press of the CONFERENCE button in the conferencing operation is ignored until the recipient of the VDN call has actually answered the call. (That is, the second button press is ignored during vector processing.)

A single-appearance voice terminal user on a 2-party call is also allowed to add the recipient of a VDN call to a 3-party conference. However, the controlling party must execute the second button press (of the switchhook or the RECALL button) after the recipient of the VDN call has actually answered the call. If the controlling party executes the second button during vector processing, the soft held party is reconnected to the controlling party, and the conference attempt does not succeed.

Display—Voice Terminal

When queue-status displays are assigned for Call Vectoring in the ACD environment, these displays use 8 characters (6 digits and 2 spaces) of the available 40 characters. Further, these eight characters overlap with the source and destination fields on the 40-character display. Therefore, unless the source and destination names are fairly brief, these names are more likely to be truncated when queue-status displays are enabled.

DCS (Distributed Communications System)

A ‘‘route to’’ command can be used in vector processing to route calls to a distant DCS node. Beyond this functionality, no DCS transparency is provided. System 85 does not provide message correspondence over DCIU links that is unique to Call Vectoring. ‘‘queue to main split’’ and ‘‘check backup split’’ commands can only be applied to ACD splits within the local DCS node.

Given these limitations, ‘‘route to’’ commands could be used to route calls to an associated extension number or VDN at a distant DCS node. The distant associated extension number or VDN can, in turn, terminate to a centralized AUDIX or Message Center queue.

DID (Direct Inward Dialing)

If the DID restriction is assigned to a VDN's class of service, this restriction *is not applied* to the VDN's vector processing. Even if this restriction is assigned to the class of service, DID calls are allowed to terminate to the vector.

FRL (Facilities Restriction Level)

In Procedure 010, Word 3, an FRL is assigned to VDNs for use with the ''route to'' command. The FRL of a VDN is used to determine whether the call is allowed to route over available network facilities.

Hunting

A vector directory number cannot be assigned to a Hunting sequence. When this is attempted, an administration error will occur.

A member of a hunt group can be assigned as the destination of a ''route to'' vector step. When this is done, the call terminates to an idle extension in the hunt group when the routed-to extension is busy.

IPA (Interpartition Access)

A voice terminal user (in a partition other than Extension Partition 0) is allowed to call (using an extension number) a VDN assigned to an extension partition in the same partition group or assigned to Extension Partition 0. If the user tries to call a VDN assigned to another group's extension partition, the switch will return intercept treatment.

The ''route to'' vector command can route calls to an extension in the VDN's partition group or to Extension Partition 0. If a ''route to'' command is programmed to route calls to another extension partition, the switch will treat a final effective ''route to'' step as a ''stop'' step. Otherwise, the ''route to'' step is ignored, and vector processing continues with the next sequential step.

Message Center

Message Center agents are normally allowed to transfer calls to VDNs. However, there may be some vectors that would provide undesirable treatment for these transferred calls. Transferring a call to a VDN is blocked whenever undesirable treatment would result.

Modem Pooling

The ‘‘route to’’ step of the Call Vectoring feature is compatible with the Modem Pooling feature. Whenever a conversion resource is needed to complete the call to a ‘‘route to’’ step’s destination, these conversion resources will be inserted.

Multiple Listed Directory Numbers

A vector directory number cannot be assigned as a system LDN in Procedure 204, Word 1. When this is attempted, an administration error will occur.

In order to route public network calls to the attendant queue with a VDN, the vector must contain a ‘‘route to’’ command that directs these calls to the attendant queue. However, vector treatment of calls within the attendant queue is not available. Vector steps (e.g., recorded announcements, conditional go to steps, forced busy, and forced disconnect) can be applied to these calls *before they enter the queue*. However, once a call enters the attendant queue, vector processing stops.

Music-on-Hold Access

The music interface that can be provided with a ‘‘delay’’ step is functionally independent of the system-wide Music-on-Hold feature. To provide music for vector processing only, the music source should be provided, and the Music-on-Hold software should be fully administered. Then, to turn off the *regular* Music-on-Hold feature, Field 11 of Procedure 275, Word 1 is set to ‘‘0.’’

Override

Override calls cannot be placed to VDNs. When this is attempted, the switch returns intercept tone.

Precedence Calling

The precedence level of AUTOVON calls that are directed to or forwarded to a VDN are checked. If the precedence level is higher than ‘‘Routine,’’ the call does not terminate to the vector. Instead, the call is redirected to the attendant queue.

Priority Calling

Priority calls cannot be placed to VDNs. When this is attempted, the switch returns intercept tone.

Restriction—Attendant Control of Voice Terminals

An attendant is not allowed to activate an Attendant Control of Voice Terminals restriction against a VDN. When this is attempted, the switch returns intercept tone.

Restriction—Code Restriction

The Code Restriction feature does not limit the routing of ‘‘route to’’ steps to destinations outside the switch. ‘‘Route to’’ steps utilize AAR/ARS software to route these calls, and Code Restriction checks are not made by the AAR/ARS software.

Restriction—Toll Restriction

The Toll Restriction feature does not limit the routing of ‘‘route to’’ steps to destinations outside the switch. ‘‘Route to’’ steps utilize AAR/ARS software to route these calls, and Toll Restriction checks are not made by the AAR/ARS software.

Restriction—Voice Terminal Restrictions

Voice terminal restrictions that are assigned to a VDN’s class of service *are not applied* to the VDN’s vector processing. As an example, if Termination Restriction is assigned to Class-of-Service 1, and Class-of-Service 1 is assigned to VDN 7300, this restriction is ignored by the Call Vectoring feature. Calls are allowed to terminate to the vector.

Voice terminal restrictions do not limit the routing of ‘‘route to’’ steps to an answering destination. For example, if Origination or Outward Restriction is assigned to a VDN’s class of service, this assignment is ignored.

Route Advance

The first trunk group in a Route Advance sequence can be programmed as the destination of a ‘‘route to’’ vector step. When this is done, the call can route over an idle trunk in an alternate trunk group in the sequence.

Tenant Services

Trunk group-oriented routing to vectors is not partitioned. There are no checks in Procedure 031, Word 2 to ensure that the partition of an automatic-in trunk group matches the partition of the assigned VDN. It is the responsibility of the system manager to ensure that these partition numbers match.

Digit-oriented routing to vectors is partitioned. When a VDN’s digits are passed to System 85 from the

serving switch or dialed from inside the switch, the Tenant Services feature makes the necessary partitioning checks. Vector directory numbers are assigned to partitions using Procedure 000, Word 4.

The ‘‘queue to main split’’ and ‘‘check backup split’’ vector commands are not partitioned. For vectors containing either of these commands, there are no checks in call-processing software to ensure that the extension partition of the answering agent matches the extension partition of the VDN or the split supervisor. It is the responsibility of the System Manager to ensure that ‘‘queue to main split’’ and ‘‘check backup split’’ commands do not cause calls to cross partition boundaries.

The ‘‘route to’’ vector command can route calls to an extension in the VDN’s extension partition or to Extension Partition 0. If a ‘‘route to’’ command is programmed to route calls to another extension partition, the switch will treat a final effective ‘‘route to’’ step as a ‘‘stop’’ step. Otherwise, the ‘‘route to’’ step is ignored, and vector processing continues with the next sequential step.

If a vector contains a ‘‘route to’’ step that routes calls to the shared attendant queue, the call will terminate to an attendant partition that is assigned to the VDN’s extension partition. If no attendant partition is assigned to the VDN’s extension partition, the switch returns Intercept Treatment to the calling party.

If a vector contains a ‘‘route to’’ step that routes calls outside the switch, the call uses the FRL assigned to the VDN and the Call Category assigned to the VDN’s extension partition.

In Procedure 030, Word 1, one Abbreviated Dialing group list is assigned to control the destinations of ‘‘route to’’ commands. The controlling terminal for this group list (assigned in Procedure 059, Word 1) can belong to any extension partition. However, it is strongly recommended that this controlling terminal belong to Extension Partition 0.

The calling party announcements for the Call Vectoring feature are not partitioned. These announcements are available to every extension partition. VDNs in various extension partitions can terminate to several vectors containing ‘‘announcement’’ steps that all request the same recorded announcement.

Transfer

Voice terminal users (including ACD agents) can transfer calls to a VDN. When this is done, the transferred-to vector controls call processing for the transferred call. For example, the call could enter an ACD split’s queue (including an AUDIX or Message Center queue) or the attendant queue, and be processed according to the vector’s programming.

Trunk Verification—Voice Terminal

Entering a VDN in Procedure 285 as the designated internal extension or the remote maintenance terminal for Trunk Verification is denied. When this is attempted, an administration error will occur.

Unattended Console Service—Preselected Call Routing

Vector processing is not available for incoming calls to the default voice terminal for Unattended Console Service. Entering a VDN in Procedure 275, Word 2 as the default extension number is not allowed. When this is attempted, an administration error will occur.

Entering a VDN as the ‘‘Trunk-to-Night Terminal’’ extension number for a trunk group in Procedure 116, Word 1 or Procedure 150 is not allowed. When this is attempted, an administration error will occur.

An attendant is not allowed to establish a ‘‘Trunk-to-Night Terminal’’ assignment by dialing a VDN as the night-terminal extension. When this is attempted, the switch returns intercept tone.

Variable Format Call Detail Recording

Call detail records show the extension number of the answering destination (rather than the VDN) as the called number when an internal or external call is processed by a vector.

The Variable Format CDR feature can be administered to record the dialed VDN (instead of the trunk-group dial access code) as the calling number for calls placed to VDNs. In this way, when several VDNs complete calls to the same answering destination, the Variable Format CDR feature can provide hard-copy data for the calls placed to the separate VDNs.

RESTRICTING FEATURE USE

Incoming calls to VDNs are not restricted. The following is a summary of these interactions.

- DID restriction is ignored.
- Incoming Attendant Control of Voice Terminal restrictions cannot be activated.
- Incoming Voice Terminal Restrictions are ignored.

The routing of ‘‘route to’’ steps to a destination is only controlled by the FRL of the VDN’s class of service. The following is a summary of these interactions.

- ‘‘Route to’’ steps can only route a call to the private or public network if the VDN’s FRL is high enough to allow access.
- ARS Toll Restriction is ignored.
- Outgoing Attendant Control of Voice Terminal restrictions cannot be activated.
- Code Restrictions do not apply.
- Toll Restriction does not apply.
- Outgoing Voice Terminal Restrictions are ignored.

HARDWARE REQUIREMENTS

Beyond the basic hardware chosen to implement other related features [e.g., the regular ACD feature, the Music-on-Hold Access feature, the CMS (Call Management System), or recorded announcements], there is no additional hardware required to implement the Call Vectoring feature.

CALL WAITING

DESCRIPTION

This feature allows a call to a busy single-appearance voice terminal to be held waiting on the called voice terminal. The calling party hears call waiting ringback tone, and the called party hears a special tone indicating that a call is waiting. One burst of tone indicates a terminal-to-terminal call, and two bursts of tone indicate an attendant or an outside call.

Use of the Call Waiting feature essentially doubles the call handling ability of a single-appearance voice terminal.

Feature History and Development

This feature was first available on System 85 in Release 1. There have been no changes to this feature since its introduction.

USER OPERATIONS

The following are the user operating procedures for this feature.

To Answer a Call Waiting Call

Without ending the current 2-way connection:

- Be sure a burst of tone is heard. [Calling party hears a call waiting ringback tone.]
- Press RECALL, or momentarily press the switchhook. [The second party is put on soft hold, and recall dial tone is heard.]
- Dial the Call Waiting answer/hold access code. [The second party is put on hard hold, and the called party is connected to the waiting party.]

By disconnecting from the current 2-way connection:

- Be sure a burst of tone is heard. [Calling party hears a call waiting ringback tone.]
- Go on-hook. [The second party is disconnected, and the switch rings the called party.]
- Go off-hook. [The called party is connected to the calling party.]

To Retrieve the Second Party After the Call Waiting Call Is Finished:

- Press RECALL, or momentarily press the switchhook. [Recall dial tone]
- Dial the Call Waiting answer/hold access code. [The second party is reconnected to the called party.]

CONSIDERATIONS

Call Waiting Tone

The Call Waiting tone is one or two 100-millisecond, 400-hertz beeps.

One Call to a Terminal

Only one call at a time can be held waiting on a single-appearance voice terminal. The switch returns busy tone to the calling party when another call is already waiting.

Multiappearance Voice Terminals

Calls are not held waiting at multiappearance voice terminals, because such calls are usually routed to an idle appearance. If every appearance is busy, the caller receives busy tone.

Application of Call Waiting

The Call Waiting feature can only be applied to calls that are in a steady 2-party talking condition.

Companion Feature

The Priority Calling feature is an *independent* companion feature to the Call Waiting feature. Priority Calling allows a calling party to use distinctive 3-burst ringing or three 400-hertz beeps to alert the called party.

Hard and Soft Processor Swaps

If a call is waiting on a busy single-appearance terminal when a hard processor swap occurs, the waiting call does not endure the hard swap.

The Call Waiting feature operates normally during a soft processor swap.

INTERACTIONS WITH OTHER FEATURES

The following System 85 features affect or are affected by the operation of this feature.

Automatic Call Distribution

Call Waiting is denied to an ACD agent while an observer (using agent override) is connected to the agent's call.

Automatic Callback

If a busy party has a call waiting and another party tries to call the busy party, the switch returns busy tone to the calling party. The calling party can now activate Automatic Callback toward the busy party. However, the callback sequence is delayed until there are no calls waiting.

If a calling party activates Automatic Callback toward a busy terminal and then becomes busy with another call, use of the Call Waiting feature by another party toward the calling party is still allowed.

If a party is waiting on a busy line, the busy party with the waiting call cannot place the active call on hold and then activate Automatic Callback toward another line.

Bridged Call

Call Waiting is partially allowed for shared extensions with only one appearance. When only the straight line set is active on this type of shared extension, the switch allows an incoming call to wait. However, when a multiappearance terminal is active on the shared extension, Call Waiting is denied. Busy tone is returned to the calling party.

Busy Verification of Lines

If an attendant attempts to busy verify a terminal line which already has a call waiting, busy verification proceeds normally. However, if the attendant attempts to busy verify a terminal line that is waiting for another line, the switch denies the busy verification attempt.

Call Coverage

When a principal has a single-appearance voice terminal with Call Waiting assigned, the call waits on the voice terminal if the principal has Coverage—Don't Answer active and the principal is busy. If any other type of coverage is active, the call goes to coverage normally.

Call Forwarding—Busy and Don't Answer

When Call Forwarding—Busy and Don't Answer is active at the called voice terminal, the forwarding operation occurs before Call Waiting is allowed. There are four possible operations. If the originally called voice terminal is busy and the forwarded-to voice terminal is idle, calls forward to and ring at the forwarded-to voice terminal. If the originally called voice terminal is busy and the forwarded-to voice terminal is busy, calls forward to and wait on the forwarded-to voice terminal. If there is no answer at the originally called voice terminal and the forwarded-to voice terminal is idle, calls forward to and ring at the forwarded-to voice terminal. If there is no answer at the originally called voice terminal and the forwarded-to voice terminal is busy, calls forward to and wait on the forwarded-to voice terminal.

Call Forwarding—Don't Answer

When Call Forwarding—Don't Answer is active at the called voice terminal, the forwarding operation occurs before Call Waiting is allowed. There are two possible operations. If there is no answer at the originally called voice terminal and the forwarded-to voice terminal is idle, calls forward to and ring at the forwarded-to voice terminal. If there is no answer at the originally called voice terminal and the forwarded-to voice terminal is busy, calls forward to and wait on the forwarded-to voice terminal.

Call Forwarding—Follow Me

When Call Forwarding—Follow Me is active at the called voice terminal, the forwarding operation occurs before Call Waiting is allowed. There are two possible operations. Calls forward to and ring at the forwarded-to voice terminal (if this voice terminal is idle). Otherwise, calls forward to and wait on the forwarded-to voice terminal (if this voice terminal is busy).

Call Park

Call Waiting cannot be used toward a line that is parked.

Call Vectoring

If a single-appearance terminal is the destination of a ''route to'' command, an incoming call will not wait on the terminal. Instead, if the ''route to'' command is the last vector step, vector processing will attempt to redirect the call to an idle forwarding destination or coverage point. This final vector step is retried at 2-second intervals. If the ''route to'' command is not the last vector step, vector processing will continue with the next sequential step.

Conference—Attendant Six Party

Call Waiting is denied when the called terminal is involved in an attendant established conference call.

Conference—Three Party

Call Waiting is denied when the called terminal is involved in a 3-party conference.

Data Protection

The switch denies Call Waiting when the Data Protection feature is active on a call.

DDC (Direct Department Calling)

When Call Waiting is assigned to an individual extension in a DDC group, calls to the terminal are allowed to wait if the called terminal line is busy. The called group member can be connected to the waiting call by going on-hook, whereby the terminal is alerted and connected to the call upon answer. These calls have preference over DDC calls in queue waiting to be answered. The controlling extension number of a DDC group should not have this feature assigned.

EUCD (Enhanced Uniform Call Distribution)

While an observer (using agent override) is connected to an EUCD agent's call, the Call Waiting feature is denied for use by the agent.

Hold

A voice terminal with a call on hold and a call in waiting goes on-hook. The waiting call is connected first. Using the Call Hold access code is the recommended method for returning to a held call.

The switch denies Call Waiting toward a voice terminal that has been placed on hold.

Hunting

Hunting takes precedence over Call Waiting. That is, if the called terminal is a member of a hunt group, the call will hunt before it will wait. However, if every member of the hunt group is busy, the call will wait on the originally called terminal.

IPA (Interpartition Access)

A partitioned System 85 allows Call Waiting and provides 1-burst tone for terminal-to-terminal calls inside a partition group. The switch also allows Call Waiting and provides 1-burst tone for terminal-to-terminal calls between an extension partition and Extension Partition 0.

Otherwise, terminal-to-terminal calls are not allowed to cross partition-group boundaries. In order to call a voice terminal in any other partition group, a voice terminal user must dial the appropriate 7-digit number which routes the call over a CO (Central Office) trunk. When this is done, the switch allows Call Waiting and provides 2-burst tone for the called voice terminal.

The switch allows Call Waiting for incoming calls from the public network, and provides 2-burst tone for these calls.

Line Lockout

A call is not allowed to wait on a voice terminal that has been locked out. The switch returns busy tone to the calling party.

Loudspeaker Paging Access

A call is not allowed to wait on a line which has accessed Loudspeaker Paging.

Malicious Call Trace

Calls are not allowed to wait on a line involved in a Malicious Call Trace. Instead, the calling party receives busy tone.

Override

Override is not allowed toward a line which is waiting, but is allowed toward the 2-party call that has a call waiting.

Queuing

The callback sequence associated with Queuing at the local switch is delayed until there are no calls waiting on the terminal. If a callback attempt is made from a tandem switch to a subtending switch, the call appears as an ordinary incoming tie trunk call to the subtending switch. Consequently, if the calling party has call waiting assigned and is busy on another call, the callback attempt notifies the called party. If the callback attempt is answered, the call can be completed while the third party waits on hold. If the called party ignores the tone, the attempt is treated as ‘‘don’t answer attempt.’’

Recorded Telephone Dictation Access

A call is not allowed to wait on a terminal that has activated Recorded Telephone Dictation Access.

Restriction—Attendant Control of Voice Terminals

If an Attendant Control of Voice Terminals restriction prevents a call from terminating at a terminal, Call Waiting is also prevented to that terminal.

Restriction—Voice Terminal Restrictions

If a Voice Terminal Restriction prevents a call from terminating at a terminal, Call Waiting is also prevented to that terminal.

Trunk Verification—Attendant and Voice Terminal

If the trunk is being held or answered by a terminal using the answer-hold code of the Call Waiting feature, trunk verification is denied.

Tenant Services

A partitioned System 85 allows Call Waiting and provides 1-burst tone for terminal-to-terminal calls inside an extension partition. The switch also allows Call Waiting and provides 1-burst tone for terminal-to-terminal calls between an extension partition and Extension Partition 0.

Otherwise, terminal-to-terminal calls are not allowed to cross partition boundaries. In order to call a voice terminal in any other partition, a voice terminal user must dial the appropriate 7-digit number which routes the call over a CO (Central Office) trunk. When this is done, the switch allows Call Waiting and provides 2-burst tone for the called voice terminal. The switch allows Call Waiting for incoming calls from the public network, and provides 2-burst tone for these calls.

System 85 allows attendant calls to wait on local voice terminals, and always provides 2-burst tone for the called voice terminal. When allowed, 2-burst tone is provided for attendant calls directed to a voice terminal using the extension number. When allowed, 2-burst tone is provided for attendant calls directed to a voice terminal using DXS (Direct Extension Selection). Two-burst tone is also provided for attendant calls directed to a local voice terminal using the appropriate 7-digit public-network number (when partitioning requires this method of dialing).

Unattended Console Service—Preselected Call Routing

Call Waiting is not allowed when a call is already waiting on the busy, preselected voice terminal, or when the user has placed another call on hold. The next call is handled by the Call Answer From Any Voice Terminal feature, if provided. The incoming queue holds all other calls. When going on-hook with a call waiting and with one or more calls in queue, the user may be connected to the next call in the queue instead of the waiting call. This occurs because the queue scan runs every 100 milliseconds, whereas the Call Waiting scan runs every 2 seconds. To ensure a connection with the waiting call, the terminal user should press the RECALL button and dial the answer-hold access code. The terminal user is then connected to the waiting party.

UCD (Uniform Call Distribution)

When Call Waiting (Terminating) is assigned to an individual extension in a UCD group, calls to that terminal are allowed to wait if the called terminal line is busy. The called terminal is connected to the waiting call by going on-hook, whereby the terminal is alerted and connected to the call when answered. These calls have preference over UCD calls in queue. The controlling extension number of a UCD group should not have the Call Waiting feature assigned.

HARDWARE REQUIREMENTS

None.

FEATURE ADMINISTRATION

Assignment of the Call Waiting feature is on a per-system and per-voice terminal basis.

This feature is administered using the MAAP (Maintenance and Administration Panel). The customer can partially administer Call Waiting using the SMT (System Management Terminal) or the TCM (Terminal Change Management) feature. This feature can also be administered using CSM (Centralized System Management).

The following are the applicable MAAP and SMT procedures.

MAAP AND SMT PROCEDURES — CALL WAITING			
PROCEDURE	**WORD**	**PURPOSE**	**SMT**
000	1	Assigns the voice terminal class of service to an extension number.	Yes
010	1	Assigns Call Waiting to a voice terminal class of service.	Yes
275	1	Assigns Call Waiting to the system class of service.	Yes
350	1	Assigns the first digit of the dial access codes (if required).	No
350	2	Assigns the feature dial access codes. The applicable encode is: 6 Call Waiting - Answer Hold.	No

The following are the applicable TCM path names used with the AP 16.

TCM SCREENS — CALL WAITING	
PATH NAME	**PURPOSE**
terminal-change class-of-service attributes	Assigns Call Waiting to a voice terminal class of service.
terminal-change extensions attributes	Assigns the class of service to an extension number.

The following are the applicable CSM Command Paths utilizing the **admin** area of TCM or FM.

CSM SCREENS — MASKS CALL WAITING		
APPL'N	**OBJECT**	**PURPOSE**
TCM	extension	Assigns the voice terminal class of service to an extension number.
TCM	class-of-service	Assigns Call Waiting to a voice terminal class of service.
TCM/FM	sys-cos	Assigns Call Waiting to the system class of service.
TCM/FM	first-digit	Assigns the first digit of the dial access code (if required).
TCM/FM	dial-access-code	Assigns the feature dial access code.
TCM	This command will be set type: i.e., 36-button, 12-button, bct, data-module, feature-module, coverage-module, or vds.	Assigns the feature buttons.

CENTRALIZED ATTENDANT SERVICE

DESCRIPTION

This feature allows a System 85 user served by switches at two or more locations to consolidate the attendant positions at one of these locations. At unattended branch locations, calls requiring attendant services route over RLTs (release link trunks) to the centralized (main) attendant location (see Figure 33-1).

Attendants located and working together provide several advantages.

- Traffic peaks at branch locations are more evenly distributed.
- Supervising and training one group could be easier.
- Working together can reduce space needed and improve morale.

Call Identification Tones

Centralized attendants receive call identification tones before connecting to a call. A distinctive tone is provided for each of the following types of calls.

- An incoming call
- A dial access to attendant (dial ‘‘0’’) call
- A forwarded call on Don’t Answer, ACD (Automatic Call Distribution), or EUCD (Enhanced Uniform Call Distribution) Overflow
- A recall on Code Call Access
- A recall on Call Waiting
- A redirected call from the Remote Access feature.

Branch Location Attendants

System 85 branch locations can also have local attendant positions. The only requirement is that a branch location accept RLTs. Local attendants can sometimes provide local services that centralized attendants are not able to provide for a branch location. The following are examples of some such services:

- Alternate Facilities Restriction Levels
- Attendant Control of Trunk Group Access
- Attendant Interposition Calling and Transfer

- Busy Verification of Lines
- Conference—Attendant Six Party
- Malicious Call Trace
- Restriction—Attendant Control of Voice Terminals
- Serial Calls
- Trunk Verification by Attendant
- Unattended Console Service—Preselected Call Routing.

Voice terminal users at a branch location can reach a local attendant by dialing the attendant dial access code. The centralized attendants handle all other calls requiring attendant help.

System Status Monitoring

If provided at the main (or at a branch) location, SSI (system status indicator) lamp panels monitor the status of RLTs and can also provide four control signals. Each panel has eight indicator lamps that show the busy, idle, or ringing states of the RLTs. The four control signals displayable are:

- CONTROL (CAS active)
- OVERLOAD
- MAJOR (alarm)
- MINOR (alarm).

Branch Modes

A System 85 branch location can operate in three modes:

- Regular (CAS active)
- Backup Voice Terminal

  In this mode, specially equipped voice terminals (at the branch) provide service for the RLTs.
- CAAVT (Call Answer From Any Voice Terminal).

  In this mode, calls that would otherwise route to a centralized attendant are identified by a bell. Any unrestricted voice terminal user (at the branch) can answer the call by dialing the CAAVT access code.

When the regular CAS mode is not active, the branch location can use either the backup voice terminal mode or the CAAVT mode.

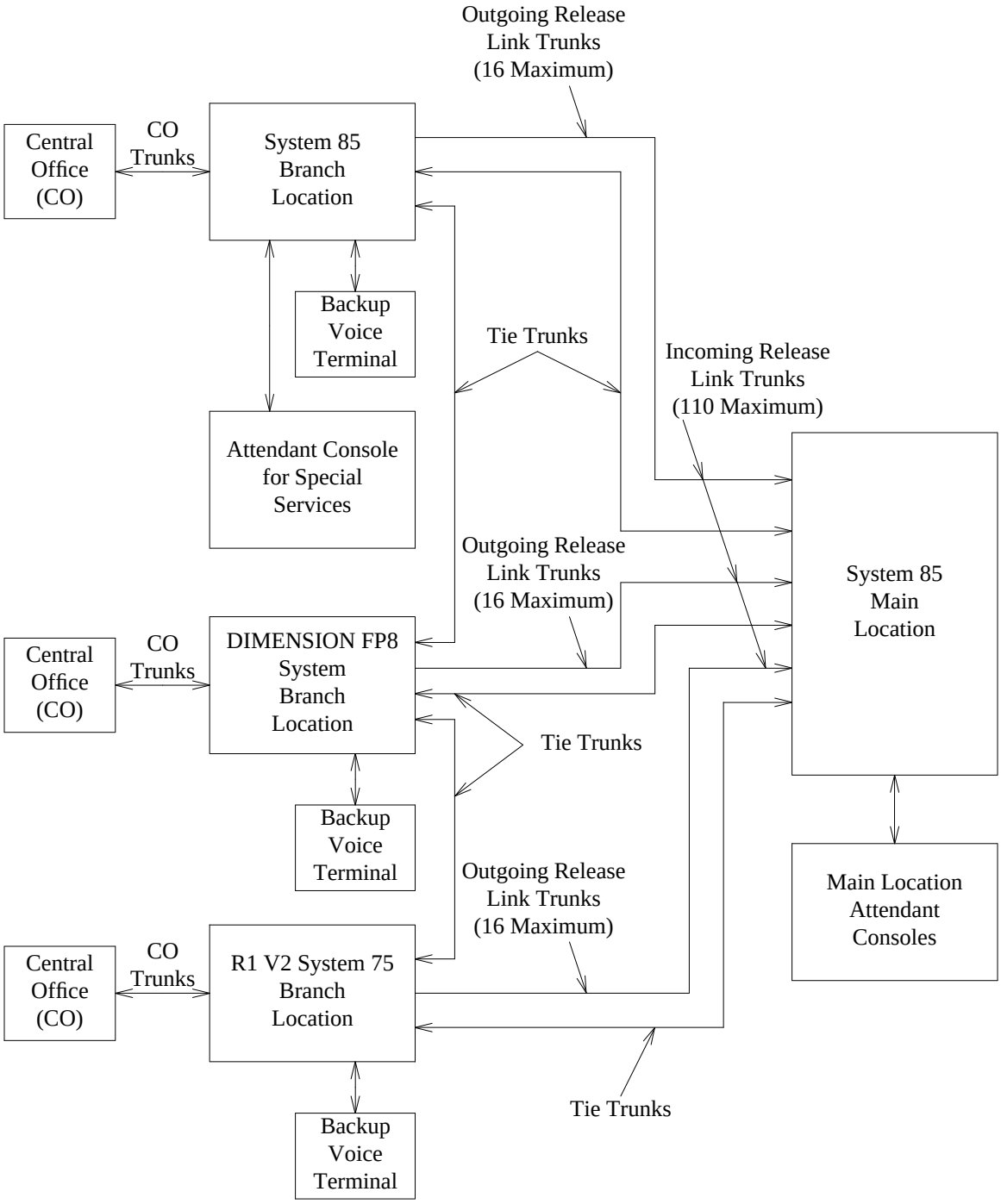

Figure 33-1. Centralized Attendant Service—Block Diagram

FADS (FORCE ADMINISTRATIONS DATA SYSTEM)

As an option, the FADS feature can be used with CAS to monitor attendant-related traffic data. The FADS feature uses a display unit and, optionally, a printer for ease of monitoring and analyzing the traffic data. The FADS feature is assigned to the CAS main location.

An incoming call routed to a centralized attendant flashes the ATND lamp, and the Attendant Display identifies the branch location called.

Feature History and Development

This feature was first available on System 85 in Release 1. Beginning with R2 V3, Extension Number Steering must be used to route DID calls to the CAS queue.

USER OPERATIONS

The following are the user operating procedures for this feature.

To Answer an Incoming Call to a Branch Location:

- Press the appropriate loop button or ANSWER. [PA lamp goes out.]
  (Calling party is connected.)
- After receiving the calling party's instructions, press START. [Dial tone]
  (Calling party is placed on hold.)
- Dial the requested number.
- When ringback is heard, press RLT RELEASE.

To Test the Status Lamps:

- Press an idle loop button.
- Press START. [Dial tone]
- Dial the lamp test access code. [Status lamps light.]
- Scan the status lamps to verify that all are lighted.

To Return Status Lamps to Normal Operation:

- Be sure you're in the test mode.
- Press CANC.
- Press START. [Dial tone]
- Dial the lamp test access code. [Status lamps go out.]
- Press RELEASE. [PA lamp lights.]

CONSIDERATIONS

Main Capacities

The main location can support as many as 40 attendant consoles. Besides providing the normal attendant functions for the main location, these consoles provide services for up to 110 RLTs. These RLTs can connect to as many as 40 branch locations. Each RLT trunk group between the main and a branch location can have up to 16 RLTs. Each RLT in the trunk group can have an individual backup voice terminal (optional).

RLT Functions

The RLTs function as 1-way outgoing circuits from the branch location and 1-way incoming circuits to the main location. They participate in the redirection of incoming calls originally directed to branch locations, to attendants at the main location, and handle call completion back to the branch. Therefore, in addition to RLTs, tie trunks should be provided between locations in the CAS arrangement to allow normal voice traffic within the arrangement.

Backup Voice Terminals

The number of backup voice terminals cannot exceed the number of release link trunks. Since the backup mode provides call identification tones, the voice terminals should be equipped with turnkey operation. This allows the user to place the headset or handset near the ear before going off-hook.

For RLT calls processed on the console switch loops, the BUSY, RING, and ANS lamps are inactive.

Department Numbering Plans

Uniform numbering of departments throughout the CAS arrangement is recommended to facilitate operations for the centralized attendants. Using this numbering plan, identical departments at every branch location are assigned the same extension number. In this way, the centralized attendants need only use one extension number to extend a call to a specific department at any location. When several departments at a branch location share the same voice terminal, several extension numbers can be assigned to the terminal.

Tie Trunk Numbering

Uniform numbering of tie trunks throughout the CAS arrangement is also recommended to facilitate operations for centralized attendants. Using this numbering plan, every tie trunk that terminates at a specific switch in the CAS arrangement is assigned the same dial access code at every originating switch. In this way, the centralized attendants need only use one access code to extend a call to a specific switch through any switch in the arrangement.

Routing DID Calls From a Branch to the CAS Queue

Procedure 115 does not allow DID trunk groups at a branch to terminate to the CAS queue at the main. Instead, Extension Number Steering provides digit-oriented routing to the CAS queue for these DID calls. Extension Number Steering is assigned in Procedure 354, Word 2. To enable DID routing from a branch to the CAS queue, assign the desired extension number to the Call to CAS Attendant dial access code (encode 49).

FRLs (Facilities Restriction Levels)

Centralized attendant positions may be assigned FRLs. In order to achieve satisfactory attendant performance, provide an appropriate FRL to these attendant positions.

Hard and Soft Processor Swaps

Stable CAS calls that have already been extended to a branch location will endure a hard processor swap at either the main or the branch location.

When a hard swap occurs at either the main or a branch location, a CAS call that has been answered by a CAS attendant (but not yet extended to the branch location) cannot be extended to the branch. The calling party should hang up and retry the call in 40 to 60 seconds.

The attendant queue at the main location is stored in a status portion of switch memory. Therefore, if a hard processor swap occurs at the main location, the attendant queue is cleared.

The CAS queue at each branch location is stored in a status portion of switch memory. Therefore, when a hard processor swap occurs at a branch location, the CAS queue at that location is cleared.

The CAS feature operates normally during a soft processor swap at either the main or a branch location.

INTERACTIONS WITH OTHER FEATURES

The following System 85 features affect or are affected by the operation of this feature.

Abbreviated Dialing

A backup voice terminal user cannot extend a call using the Abbreviated Dialing feature.

Attendant Auto—Manual Splitting

Manual splitting is inactive. The SPLIT lamp and button do not function on release link trunk calls.

Attendant Direct Extension Selection With Busy Lamp Field

When a console at a Centralized Attendant Service main location is handling a call from a branch location, the BLF gives no indication of busy/idle status of branch location voice terminals. An attendant's DXS buttons cannot be used to call voice terminals at the branch.

The Attendant Direct Extension Selection With Busy Lamp Field feature is not available for backup voice terminals at branch locations.

Attendant Interposition Calling and Transfer

A call originated to a centralized attendant via an RLT cannot be transferred to another attendant using the Attendant Interposition Calling and Transfer feature.

Call Coverage

When a backup voice terminal in a CAS arrangement is assigned coverage, calls directly addressed to that extension are redirected normally. However, attendant seeking calls to this terminal do not redirect to coverage.

Call Vectoring

A centralized attendant is allowed to extend calls to a VDN. When this is done, the switch returns ringback tone to the attendant. At this time, the centralized attendant should release the call and return to other activity. If the centralized attendant does not release within 4 seconds, the switch will complete the call to an idle answering destination. If an idle answering destination is not found, the switch will return reorder tone to the attendant.

A centralized attendant is not allowed to place direct calls to a VDN over an RLT (Release Link Trunk). When this is attempted, the switch returns intercept tone.

Vector processing is not available for incoming calls to backup voice terminals at a branch location. Entering a VDN in Procedure 211, Word 2 as the extension number of a backup voice terminal is not allowed. When this is attempted, an administration error will occur.

Loudspeaker Paging Access

A CAS attendant has only 10 seconds to make a page, and then the paging circuit is released. This prevents the RLTs associated with the attendant from being tied up.

Main/Satellite/Tributary

A Main/Satellite complex cannot have Centralized Attendant Service. If a satellite location in a Main/Satellite arrangement is also translated as a branch location in a CAS arrangement, neither feature will work properly. (Tie trunks in the network will lock up.)

Malicious Call Trace

A malicious call placed to a branch location in a CAS arrangement cannot be controlled by a CAS attendant at the main switch. However, when the MCT feature is assigned at a branch location, malicious calls can be controlled by a special services attendant at the branch location if one is assigned.

A malicious call placed to the main location in a CAS arrangement can be controlled by a CAS attendant at the main switch.

Override

When a CAS backup voice terminal is handling an RLT call, an attempt to enter the conversation by another terminal using the Override feature is denied.

SMDR (Station Message Detail Recording)

The SMDR feature is provided for calls extended by a CAS attendant or backup voice terminal.

Tenant Services

A partitioned System 85 can function as a main location in a CAS arrangement. However, incoming RLTs (release link trunks) are not assigned to specific partitions, so these centralized attendants must reside in Attendant Partition 0.

A partitioned System 85 cannot serve as a branch location in a CAS arrangement.

Through Dialing

When a switch is a branch location in the CAS network, the CAS attendant can allow terminal users at the branch to through dial calls at the branch.

Timed Reminder

The CAS feature uses a recall timing process that is different from the standard Timed Reminder feature. The timed interval for CAS is assignable in 2-second intervals up to a maximum of 62 seconds. The standard timed reminder interval is 30 seconds.

Unattended Console Service—Call Answer From Any Voice Terminal

When the branch switch is in the Call Answer From Any Voice Terminal mode of operation, incoming tie trunk and Remote Access calls reach the Call Answer From Any Voice Terminal queue.

Variable Format Call Detail Recording

The call record stores call data for calls that a CAS attendant extends over RLTs.

HARDWARE REQUIREMENTS

The CAS feature requires the following special hardware.

- Each RLT requires one circuit of an SN233 circuit pack (four circuits per SN233).
- Additional hardware is required to monitor Release Link Trunks. This equipment includes:
  - 30A8 SSI (System Status Indicator) lamp panels (maximum of 35) (8 lamps per panel)
  - SN241 Contact Interface circuit packs (eight circuits per SN241).

The branch location switching systems may require the following additional hardware.

- An SN253 auxiliary tone plant per module
- Specially equipped backup voice terminal(s) (optional).
  - 2514BM backup voice terminal sets
  - 60A or KS-20778 headsets
  - G15A handsets.

FEATURE ADMINISTRATION

Assignment of the CAS feature is on a per-system basis.

This feature is administered using the MAAP (Maintenance and Administration Panel). The customer can partially administer this feature using the SMT (System Management Terminal), the FM (Facilities Management) feature, or the TCM (Terminal Change Management) feature. This feature can also be administered using CSM (Centralized System Management).

The following are the applicable MAAP and SMT procedures.

MAAP AND SMT PROCEDURES — CENTRALIZED ATTENDANT SERVICE Common Administration for Main and Branch Locations			
PROCEDURE	**WORD**	**PURPOSE**	**SMT**
001	—	Assigns the associated extensions to the primary extension for uniform numbering.	Yes
100	1	Administers attendant ID code and trunk group assignments for release link trunks and contact interface circuits.	No
101	—	Administers trunk group characteristics for the trunk groups administered in Procedure 100, Word 1.	No
115	—	Assigns CAS termination for an incoming trunk group to the CAS arrangement.	No
150	—	Assigns the SN233 equipment location of an RLT trunk to its trunk-group number.	No
155	—	Assigns the SN241 equipment location of a contact interface trunk to its trunk group number.	No
275	3	Enters the DCS node number of the main location.	Yes
286	1	Assigns Remote Access to Attendant for the CAS attendant.	Yes

MAAP AND SMT PROCEDURES — CENTRALIZED ATTENDANT SERVICE Administration for Main Locations			
PROCEDURE	**WORD**	**PURPOSE**	**SMT**
203	1	Assigns the RLT RELEASE button to the CAS consoles. The applicable encode is as follows: 29 RLT RELEASE Button.	No
204	1	Designates the alphanumeric display for incoming calls to the CAS attendants.	No
212	1	Administers the CAS main RLT trunk groups and the type of branch.	No
212	2	Administers lamp status for incoming RLTs to the main.	No
350	1	Assigns the first digit of the feature or trunk group dial access codes (if required).	No
350	2	Assigns the CAS dial access codes. The applicable encodes are as follows: 8 Attendant Dial Access Code 64 CAS main lamp test.	No

MAAP AND SMT PROCEDURES — CENTRALIZED ATTENDANT SERVICE Administration for a Branch Location			
PROCEDURE	**WORD**	**PURPOSE**	**SMT**
000	1	Administers CAS backup terminal equipment location and class of service.	Yes
000	2	Administers hunt-to assignments for the CAS backup terminal.	Yes
100	1	Administers the special queue trunk group.	No
211	1	Administers CAS attendant features: timed reminder, LDN tones, and queue assignments.	Yes
211	2	Administers the CAS branch backup extension associated with an RLT and start pulse activation.	Yes
252	2	Administers an auxiliary tone plant (SN253) for use with CAS.	No
275	4	Assigns Trunk-to-Trunk Transfer to the system class of service.	Yes
350	1	Assigns the first digit of the feature or trunk-group dial access codes (if required).	No
350	2	Assigns the CAS dial access codes. Applicable encodes are: 8 Attendant DAC (for local attendant console, if provided) 45 Activate CAS control 46 Activate control of CAS backup terminal 47 Activate CAAVT (Call Answer From Any Voice Terminal) for CAS backup 48 CAS attendant puts remote call in hold state 49 Call to CAS attendant 50 CAS branch lamp test.	No

The following is the applicable TCM path name used with the AP 16.

TCM SCREEN — CENTRALIZED ATTENDANT SERVICE	
PATH NAME	**PURPOSE**
terminal-change extensions attributes	Assigns the class of service for the CAS backup terminal. Also, this screen administers the hunt-to extension number to the CAS backup terminal and assigns the associated extension numbers to the primary extension for uniform numbering.

The following is the applicable FM path name used with the AP 16.

FM SCREEN — CENTRALIZED ATTENDANT SERVICE	
PATH NAME	**PURPOSE**
facilities-mgmt system-parameters centralized-attnd	Specifies the timed reminder interval, sets the queue overflow level, and assigns the branch backup extension to an RLT.

The following are the applicable CSM Command Paths utilizing the **admin** area of TCM or FM.

CSM SCREENS — MASKS CENTRALIZED ATTENDANT SERVICE Common Administration for Main and Branch Locations		
APPL'N	**OBJECT**	**PURPOSE**
TCM	associated-extension	Assigns the associated extensions to the primary extension for uniform numbering. Assigns a name display to the associated extension.
FM	trk-grp	Administers attendant ID code and trunk group assignments for release link trunks and contact interface circuits. Administers trunk group characteristics, and assigns equipment locations for the RLT and the contact interface trunk(s) to their trunk group numbers.
FM	term-trk-grps	Assigns CAS termination for an incoming trunk group to the CAS arrangement.
TCM/FM	sys-cos	Enters the DCS node number of the main location.
FM	alt-frl	Assigns Remote Access to Attendant for the CAS attendant.

CSM SCREENS — MASKS CENTRALIZED ATTENDANT SERVICE Administration for Main Locations		
APPL'N	**OBJECT**	**PURPOSE**
TCM	control-keys	Assigns the RLT RELEASE button to the CAS console(s).
TCM	console-messages	Designates the alphanumeric display for incoming calls to the CAS attendants.
FM	cas	Adds, changes, displays, or removes the CAS main RLT groups and the type(s) of branch. Administers lamp status for incoming RLTs to the main.
TCM/FM	first digit	Assigns the first digit of the feature or trunk group dial access codes (if required).
TCM/FM	dial-access-code	Assigns the CAS dial access codes.

CSM SCREENS — MASKS CENTRALIZED ATTENDANT SERVICE Administration for a Branch Location		
APPL'N	**OBJECT**	**PURPOSE**
TCM	extension	Administers CAS backup terminal equipment location and class of service. Administers hunt-to assignments for the CAS backup terminal.
TCM/FM	trk-grp	Administers the special queue trunk group.
FM	cas	Administers CAS attendant features: timed reminder, LDN tone and queue assignments. Administers the CAS branch backup extension associated with an RLT and start pulse activation.
TCM/FM	sys-cos	Assigns trunk-to-trunk transfer to the system class of service.
TCM/FM	first-digit	Assigns the first digit of the feature or trunk-group dial access codes (if required).
TCM/FM	dial-access-code	Assigns the CAS dial access codes.

CENTRALIZED MESSAGE DETAIL RECORDING

DESCRIPTION

This feature provides a means of collecting and reporting detailed call information on selected trunk groups. This call detail information can be used for cost allocation, traffic analysis, and security (detecting unauthorized calls). Call information is collected inside the System 85 CDR (Call Detail Recording) record and is routed to four types of output ports. These four port types are illustrated in figure 34-1). The CMDR feature records the CDR records output across the CMDR/NCOSS ports (1 through 7). Through Administration of Procedure 253, the CMDR (Centralized Message Detail Recording) feature (sometimes called the CSMDR feature), can use the one SMDR (Station Message Detail Recording) port as an eighth input port to an LSU adjunct (Refer to Figure 34-1). This feature is assigned to selected trunk groups and therefore, internal calls (i.e., Intercom calls) and calls that do not involve a selected (for CMDR reporting) trunk group, are not recorded.

Call information output from the CDR record is provided at four different port types shown in Figure 34-1. Adjuncts to ports other than the CMDR/NCOSS ports are not shown.

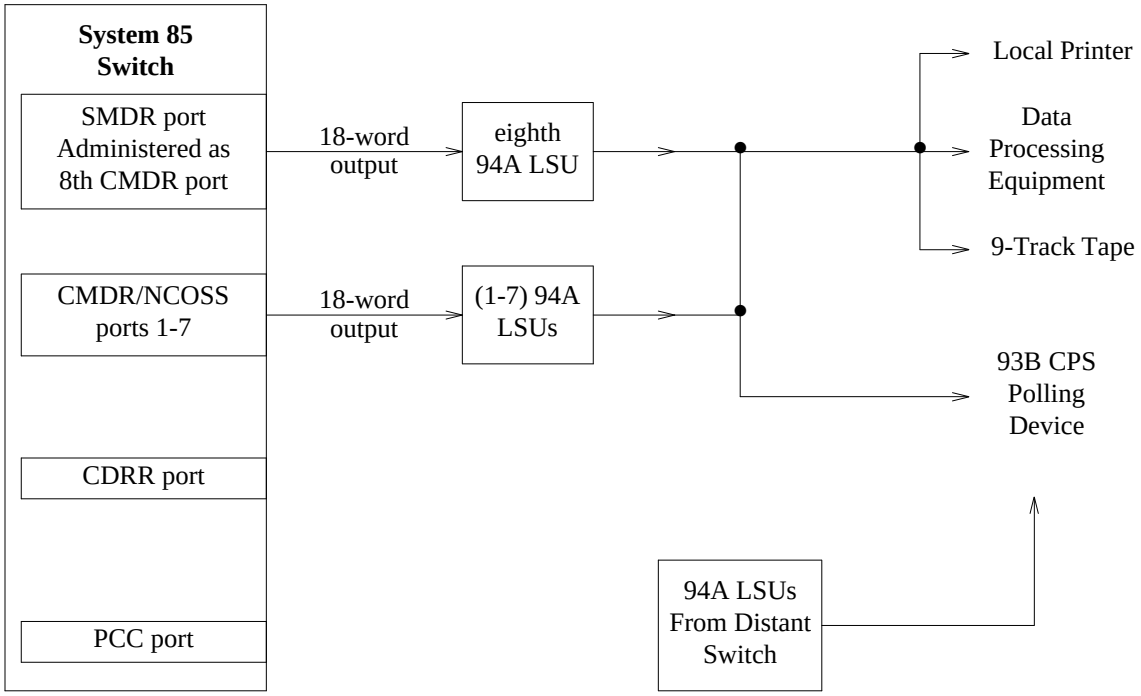

Figure 34-1. Call Record Output Arrangements

Feature History and Development

This feature was first available, on a limited scale, in System 85, Release 1. Feature enhancements have included the following:

- Expanded account codes (up to 15 digits), first available in R2 V3.
- Forced entry of account codes (optional), first available in R2 V3. The optional FEAC (Forced Entry of Account Codes) enhancement was developed in R2 V3 to force the user to enter an account code based on the call characteristics and administered restrictions. FEAC provides the customer with a method of accounting for calls based on the following three categories:
  - User's class of service for toll calls. A toll call is categorized by the following:
    a. All ARS calls are considered toll calls.
    b. When the first digit of a CO (Central Office) call is a one.
    c. When an area code is dialed.
    d. When the dialed office code is administered as a toll office code.
  - The call accesses a trunk group.
  - Accounting is done on a system basis when ARS is used.
- Flexible call record start time administrable by trunk group, first available in R2 V3.
- Expanded trunk ID fields (three digits), first available in R2 V3.

Since the development of SMDR (Station Message Detail Recording) and CMDR, other methods of recording and reporting called VFCDR (Variable Format Call Detail Recording) and CDRR (Call Detail Recording and Reporting) have been developed for System 85. The VFCDR feature is discussed in its own feature section within this manual. The CDRR feature is contained within the AP-16, and is supported by the switch. Refer to AP-16 documentation for details.

The CDR Record

Call information is collected by the switch in a data base called the CDR record. The data items from a CDR record can be output in five different *formats*. The formats listed below that are in bold letters apply to the CMDR feature.

— Standard Default 15-word (Refer to the SMDR feature)

— **Standard Default 18-word (Refer to Figure 34-3)**

— Recommended Standard 18-word ISDN (Refer to the VFCDR feature)

— Recommended Standard 24-word (Refer to the VFCDR feature)

— Variable format. (Refer to the VFCDR feature)

This data base uses one of the three following *account code* structures. Notice that the account code is part of the call record shown in Figure 34-3.

- Standard 1 to 5 digits
- Expanded 6 to 12 digits
- Expanded 13 to 15 digits.

The SMDR port can be administered to provide 15- or 18-word standard default formats (15-word for SMDR, 18-word for LSU portability) while CMDR and CDRR use the same 18-word format. The VFCDR output is variable between 15-, 18-, and 24-word formats to provide for a variety of applications. All CDR formats use the 4-byte, 16-bit word structure shown in Table 34-A, below.

FIELD ID	**Byte 4**	**Byte 3**	**Byte 2**	**Byte 1**
BITS USED	15 14 13 12	11 10 09 08	07 06 05 04	03 02 01 00
CONTENTS	Op Code	Call Data	Call Data	Call Data

Table 34-1. Call Detail Record Word Structure

The standard default 15-word output is provided at the SMDR output port and is used by the SMDR feature. The standard default 18-word output format is provided at the CMDR/NCOSS ports and is used by the CMDR feature. The standard default 18-word record is illustrated in Figure 34-3.

Each word of the 15- or 18-word standard default format record consists of 16 bits of data (four 4-bit nibbles, or ‘‘cells’’). Each cell contains binary coded decimal data except the Condition Code cell, IXC Code, and Feature Flag cells, which can be hexadecimal data. The first 4 bits of each word, bits 15 through 12, contain the operation code (opcode). The 24- word record and the variable record, however, do not require any opcodes if used with the 3B2 CDRU (Call Detail Recording Utility).

The opcode is used for hardware control and on-line error checking (identifies the end of a record), and is stored in the storage devices. However, this opcode is never included in the outputs received by the polling devices. The last 12 bits, bits 11 through 0, are arranged in 4-bit cells that contain coded data representing CDR data items, or ‘‘fields.’’

DATA PRESENTATIONS FROM THE SWITCH

- **SMDR Port**:
  - — 15-Word Direct Output BCD Code
  - — 18-Word Direct Output BCD Code.
- CMDR/NCOSS Port:
  - — 15-Word Direct Output BCD Code
  - — 18-Word Direct Output BCD Code.

- CDRR Port:
  - — 15-Word Direct Output BCD Code
  - — 18-Word Direct Output BCD Code.
- PCC (TN-474B) Port:
  - — 15- to 24-Word BCD with BTC (Better Transmission Checks) Protocol
  - — 18-word Formatted ASCII Direct Output
  - — Unformatted ASCII Direct Output.

EXISTING DATA ITEMS (PREVIOUS TO R2 V4)

This section describes the data elements in the CDR records as they have existed prior to System 85, R2 V4. The enhancements to the existing data elements and the new data elements that are available with System 85, R2 V4, are discussed in the next section.

Call information available on the CMDR record includes the following:

- Call Duration. This field measures the timing of a call. It contains a total of four characters, representing hours (0 through 9), minutes (0 through 59), and 6-second intervals within each minute (0 through 9). The call-duration timing in the CDR record varies with the type of call as follows:
  - — For AAR/ARS calls, prior to System 85, R2 V3, the call-duration timing started right after the last digit was dialed with an error margin of from 0 to 12 seconds. System 85, R2 V3 and later releases have the Variable Call Completion Threshold feature that can set the delay time between end of dialing and start of charging on either a per-trunk group or a per-system basis. The administrable time can be from 1 to 99 seconds in 1-second increments. If neither trunk group or system time is administered, a fixed 6-second default time is used.
  - — For CO, TIE, and FX trunk groups, prior to System 85, R2 V3, the call-duration timing started 10 seconds after the last digit was dialed with an error margin of 0 to 12 seconds. For these trunk groups, there is also an administrable timing parameter in System 85, R2 V3, on a per-trunk group or a per-system basis. In the case of an AAR/ARS call over a CO, TIE, or FX trunk group, the call-duration timing scheme for AAR/ARS overrides that for CO, TIE, or FX trunk group.
  - — Calls can be queued if the call-processing software is unable to find any available trunks. Queued calls do not start timing until they come out of queue. As a result, the call-duration time does not include the time in queue.
- Condition Code. The condition code is a single-digit alpha or numeric character field. This field defines the type of call or information recorded in a particular call record.

CODE USED		DESCRIPTION
9-Track Tape	**Direct Output**	
1	A	Attendant handled calls (except conference calls).
2	B	Adding to the list of CDR monitored trunk groups.
3	C	Removing from the list of CDR monitored trunk groups.
4	D	A long hold time call (10 hours or longer). Calls with a duration of 9 hours, 59 and 9/10 minutes are reported each 10-hours. When they end, a final record with the remaining call time is reported.
5	E	Maintenance Test data record. *Ignore* in call data compilations.
6	F	System reload. *Ignore* in call data compilations.
7	G	Calls handled by the ARS or AAR features (overrides condition codes 1, 9, and C).
8	H	Calls that have been handled via the Queuing feature.
9	I	Incoming or tandem trunk calls.
A	BLANK	Outgoing calls.
B	BLANK	Not used.
C	L	Conference Call—Attendant 6-Party. Separate records are produced for each outgoing conference connection.
D	M	Call record with ARS plan change data.
E	N	Unsuccessful call, either incoming or outgoing. Includes call failures for any reason except insufficient FRL.
F	O	Unsuccessful outgoing call due to insufficient FRL.

Table 34-2. CDR Condition Codes

- Access Code Used. This 3-digit field, used only for outgoing or tandem calls, contains the access code of the actual trunk group that the call was routed over.

  If the Access Code Dialed Field and the Access Code Used Field have the same value, the field appears blank.

- Dialed Number. This field contains up to 15 digits and is the number dialed by the system user.

- Calling Number. This field contains the trunk access code on incoming calls or the extension number of an outgoing call. The Calling Number contains up to four digits before System 85, R2 V1. After R2 V1, the Calling Number field can be up to five digits but the fifth digit is recorded in a separate field.
- Account Code. This field contains an optional user-dialed account number that further identifies a specific call. Prior to System 85, R2 V3, this field was five digits long. The capability to assign a flexible account code, up to 15 digits, was introduced in System 85, R2 V3. If a user administers an account code greater than 5 digits, it overrides other fields such as authorization code, time-in-queue, and/or FRL in the record. If account codes are not used, this field is blank.
- Authorization Code. This 7-digit field further identifies the call and indicates the outgoing calling privileges of the caller. If authorization codes are not used, this field is blank.
- Time-in-Queue. This 2-digit field indicates the time that the outgoing call has spent in a trunk group's queue. It represents minutes for ringback queue or tenths of minutes for off-hook queue. When a ringback and off-hook queue are both provided on the same outgoing trunk, voice terminals use the ringback queue, and trunks use the off-hook queue. This field is blank if no queuing is used.
- FRL (Facilities Restriction Level). This field contains a 1-digit number that indicates the level of service associated with the calling privileges for the call. This field is the FRL of the authorization code used for the call unless no authorization code is used, in which case it is the FRL of the originating facility (trunk number or extension). FRLs are supplied for ARS/AAR calls and for Remote Access calls if FRL is active for Remote Access. Otherwise, the FRL field is blank.
- 10,000ths Digit. This field is the fifth (10,000ths) digit of the calling number. It is blank if the 5-digit dial plan is not administered.
- Incoming Circuit ID. This field identifies the trunk within a trunk group which is used to carry incoming and tandem calls. This field was enlarged from two digits to three digits in System 85, R2 V3.
- Feature Flags. This 1-digit field consists of the following bit assignments in System 85, R2 V3 and previous releases: validity bit, queuing-type bit, voice/data call bit and one reserved bit.
- Outgoing Circuit ID. This field identifies the trunk within a trunk group which is used to carry outgoing calls. This field was enlarged from two digits to three digits in System 85, R2 V3.
- IXC (Interexchange Carrier) Code. This 1-digit field, introduced in System 85, R2 V3, identifies, for a particular call, the long-distance carrier — i.e., the vendor of ''interexchange service'' — such as AT&T Communications, MCI, or US Sprint.

R2 V4 CHANGES TO EXISTING DATA ITEMS

- Expanded IXC Code. The IXC (Interexchange Carrier) code has been enlarged from one digit to three digits.
- Answer Supervision in Feature Flag. A Feature Flag bit position is now being used to indicate Answer Supervision.

- 4-Digit Dial Access Codes. The following fields are adjusted to handle the capabilities of the 4-digit DACs (Dial Access Codes) enhancement.
  - *Dialed DAC and DAC Used.* There are two fields that record the DAC Dialed and the DAC Used. These fields record the 4-digit DACs if these fields are administered to be greater than three digits. If the fields are administered to the appropriate length, the entire DAC is recorded in these fields.

    If these fields are administered for less than the number of digits in the DAC, only the right-most digits are recorded. The number of digits recorded depends on the administered data field lengths.

    The 4-digit DACs are supported in 24-word and Variable Format CDR records.
  - *Status Messages.* With the variable format CDR records, a maximum of 24 DACs can be administered to a single status message. The maximum number of DACs that can be administered is dependent on the DAC length and the number of words per CDR record. DACs of one, two, three, or four digits are supported in R2 V4.

    If the DAC length is greater than the data field length, only the right-most digits are recorded in the CDR record. Otherwise, the entire DAC is recorded.

Hardware Configurations

Configurations vary according to port, processor, and peripheral devices. Only the most commonly used storage units, processing products, and peripherals are mentioned.

- Ports: SMDR, **CMDR/NCOSS**, CDRR and PCC.
- Associated Processing and Storage Units: **9-Track Tape, 94A LSU, 93B CPS**, AP–16, 3B2 CDRU, TELESEER* SMDR, **CSM, NCOSS**, and CAS.
- Peripherals: See "Customer Owned Peripherals" in CONSIDERATIONS.

THE CDR PORTS

SMDR Port:

The CDR record outputs call information over the SMDR port to either the SMDR adjunct or to an LSU (if administered as a CMDR/NCOSS port). Outputting to the SMDR adjunct is the traditional local output version used by the SMDR (Station Message Detail Reporting) feature. Output goes directly to a printer or can be written to a 9-track tape.

* Registered trademark of AT&T.

Table 34-3. CDR Standard Formats

		STANDARD FORMATS			
	Encode	**CDR Data Items default**	**15-Word default**	**18-Word ISDN**	**18-Word**
1	Call Duration Hours	x	x	x	x
2	Call Duration Minutes	x	x	x	x
3	Call Duration 10ths/Minute	x	x	x	x
4	Condition Code	x	x	x	x
5	Trunk Access Code Dialed	x	x	x	x
6	Trunk Access Code Used	x	x	x	x
7	Dialed Number	x	x	x	x
8	Calling Number*	*	*	*	x
9	Account Code	x	x	x	x
10	Authorization Code	†	†	x	x
11	Time in Queue	†	†		x
12	Facilities Restriction Level	†	†	x	x
13	5th Digit of Calling Extension		x	x	x
14	Incoming Circuit ID		x	x	x
15	Feature Flag		x	x	x
16	Outgoing Circuit ID		x	x	x
17	Outgoing Circuit ID (100s digit)		x	x	x
18	Incoming Circuit ID (100s digit)		x	x	x
19	Interexchange Carrier Code		x	x	x
20	Time of Day, Hours				
21	Time of Day, Minutes				
22	Date, Month				
23	Date, Day				
24	Date, Year				
25	Incoming Trunk Dial Access*	*	*	*	x
26	Precedence Level Digit				x
27	Attendant Console Number				x
28	ISDN Network Service			x	x
29	Extension Partition Number				
30	Node Number				x
31	Bearer Capability Class				x
50	Control Code				x
51	Time of Day Pattern Set				
52-59	Dial Access Codes 1-8	x	x		
60-75	Dial Access Codes 9-24				

* For all Standard 15- and 18-word record formats, the Incoming Trunk Dial Access Code is located in the same field as the Calling Number.

† The Standard Default 15- and 18-word formats may or may not have the Authorization Code, Time-in-Queue, and FRL fields, depending on the length of the Account Code.

CMDR/NCOSS Port:

The CDR record outputs call information over 7 ports (eight including the SMDR port) in a rotational pattern. This allows the LSUs enough time to process the high speed output of the switch. These ports output an 18-word record which includes IXC codes and circuit IDs as well as expanded account codes. An external polling device such as the 93B CPS (Customer Premise System) is used to collect and process records on a periodic basis. The CMDR/NCOSS ports support both the CMDR (Centralized Message Detail Recording) feature and the network monitoring feature NCOSS (Network Control Operations Support System).

CDRR Port:

The CDR record passes call information over the CDRR (Call Detail Recording and Reporting) port to the CDRR feature available on the AP-16. Refer to AP-16 documentation for details.

PCC Port:

The CDR record passes call information over the PCC (Processor Communications Circuit) port to the 3B2 CDRU (Call Detail Recording Utility). The PCC port is capable of direct output to customer peripherals.

The 94A LSUs cannot handle the 24-word capability that the new PCC port can output. Thus, the switch must recognize the type of output port so it can truncate extra words from the CDR output (24 words truncated to 18 words for CMDR/NCOSS port) when appropriate. Refer to the VFCDR feature for details.

All four adjuncts, SMDR, 94A LSU, AP-16, and 3B2 use the same data base record (The Call Detail Record inside the switch) as a source for call detail information. Similar information is output to all four port types (SMDR, CMDR/NCOSS, CDRR, and PCC). The only difference in port output is the number of words in a record. Older switch adjuncts are not able to receive the new and expanded CDR record formats provided. The switch is designed to support not only the new adjuncts, but the old adjuncts as well. For example, the SMDR adjunct cannot receive 5-digit extension numbers; therefore, the switch truncates the fifth digit. Through administration, the SMDR port is capable of outputting 5-digit extensions, (requires 18-word format) and can be administered as an eighth CMDR/NCOSS port.

ASSOCIATED STORAGE UNITS

The 3B2 CDRU: See the "ASSOCIATED STORAGE UNITS" section in the VFCDR feature description.

The 94A LSU:

As the record size grew to 18 words, a 94A LSU (Local Storage Unit) was introduced to collect and store data output over the CMDR/NCOSS ports. The 94A LSU supports: 1) a direct-output port that feeds into the AT&T processing systems (such as CSM, TELESEER SMDR, CAS or other customer-provided equipment), and, 2) two NCOSS/LSU ports through which NCOSS collects the CDR records by polling each LSU on a regular basis, and the 93B poller polls the LSU for centralized collection of CDR data. The NCOSS/LSU ports can be polled simultaneously by NCOSS and by the 93B poller.

The 94A LSU can handle up to 14,600 CDR records per hour, store up to 64,000 records, and transmit up to 5,700 calls per hour over one or two 1200-bps asynchronous data links. Data integrity between the 94A LSU and the 93B CMDR is assured by using a data protocol that checks errors in blocks of data.

In System 85, R2 V3, support of multiple 94A LSU devices was introduced, with each LSU receiving a portion of the CDR records distributed by the switch in a round-robin fashion. Multiple LSUs were introduced primarily to accommodate the slow polling speed of the 93B CMDR in high CDR volume applications, and also to provide for at least partial CDR retrieval in the event of a single LSU failure.

The 94A supports the standard default 15- and 18-word , and 18-word ISDN record formats, but not the 24-word or variable format. Figure 34-2 shows an example of the serial data output from the 94A LSU.

The 93B CMDR:

For customers with multiple locations, the 94A LSU in each location can be polled by a centralized device called the 93B CMDR . The 93B CMDR connects to a 94A LSU via a 212A or equivalent data set over the DDD network. It can poll a maximum of 31 LSUs but only 3 LSUs can be polled simultaneously. The 93B CMDR has the capacity to poll up to 27,000 call records per hour at a maximum rate of 9,000 call records per hour for each LSU (in the maximum configuration).

The 93B CMDR has two versions. The first version, called CMDR-TO (Centralized Message Detail Recorder — Tape Output), provides CDR records that are stored on magnetic tapes. The second version, called CMDR-DO (Centralized Message Detail Recorder — Direct Output), provides CDR records directly to a customer host or to CSM.

The 9-Track Tape Unit:

See the SMDR feature for details.

ASSOCIATED PROCESSORS AND SYSTEMS

NCOSS (Network Control Operations Support System):

The NCOSS system remotely polls a local storage unit to obtain CDR records which are used to perform network analysis. This data link uses the DDCMP protocol for data integrity, and also supports a message set similar to the 93B for communication with the CDRU.

The NCOSS supports the default 15- and 18- word CDR records as well as the recommended standard 18-word ISDN and 24-word records.

3B2 The 3B2 processor cannot be interfaced with the CMDR/NCOSS port. The 3B2 must be used with the PCC port. See the VFCDR feature for details.

CHARACTER 7 BIT 1

	XX	**START TRANSMISSION**
	00	SPACE
	01	SPACE
	02	SPACE
	03	TIME-HR
	04	TIME-HR
	05	TIME-MINUTE
	06	TIME-HR
	07	SPACE
	08	DURATION-HOUR
	09	DURATION-MINUTE
	10	DURATION-MINUTE
	11	DURATION-MINUTE
	12	SPACE
SERIAL DATA STREAM	13	CONDITION CODE
	14	SPACE
	15	ACCESS CODE 1-1
	16	ACCESS CODE 1-2
	17	ACCESS CODE 1-3
	18	ACCESS CODE 2-1
	19	ACCESS CODE 2-2
	20	ACCESS CODE 2-3
	21	SPACE
	22	DIALED NUMBER -1
	23	DIALED NUMBER -2
	24	DIALED NUMBER -3
	25	DIALED NUMBER -4
	26	DIALED NUMBER -5
	27	DIALED NUMBER -6
	28	DIALED NUMBER -7
	29	DIALED NUMBER -8
	30	DIALED NUMBER -9
	31	DIALED NUMBER -10

CHARACTER 7 BIT 1

	31	DIALED NUMBER -11
	32	DIALED NUMBER -12
	33	DIALED NUMBER -13
	34	DIALED NUMBER -14
	35	DIALED NUMBER -15
	36	SPACE
	37	CALLING NUMBER -1
	38	CALLING NUMBER -2
	39	CALLING NUMBER -3
	40	CALLING NUMBER -4
	41	SPACE
	42	ACCOUNT CODE -0
	43	ACCOUNT CODE -1
SERIAL DATA STREAM	44	ACCOUNT CODE -2
	45	ACCOUNT CODE -3
	46	ACCOUNT CODE -4
	47	ACCOUNT CODE -5
	48	AUTHORIZATION CODE -1
	49	AUTHORIZATION CODE -2
	50	AUTHORIZATION CODE -3
	51	AUTHORIZATION CODE -4
	52	AUTHORIZATION CODE -5
	53	AUTHORIZATION CODE -6
	54	AUTHORIZATION CODE -7
	55	TIME-IN-QUEUE -1
	56	TIME-IN-QUEUE -2
	57	FACIL.
	58	CARRIAGE RETURN
	59	LINE FEED
	60	NULL
	61	NULL
	62	NULL
	XX	**END TRANSMISSION**

Figure 34-2. Example of 94A LSU Call Record Output to a Polling Device

	15 14 13 12	11 10 09 08	07 06 05 04	03 02 01 00
01	Opcode	Hours	Call Duration Minute (Xx)	Minute (xX)
02	Opcode	10th Minute	Condition Code	Access Code 1
03	Opcode	Access Code 1		Access Code 2
04	Opcode	Access Code 2		Dialed Number
05	Opcode	Dialed Number		
06	Opcode	Dialed Number		
07	Opcode	Dialed Number		
08	Opcode	Dialed Number		
09	Opcode	Dialed Number		Calling Number
10	Opcode	Calling Number		
11	Opcode	Account Code digit 1	digit 2	digit 3
12	Opcode	Account Code digit 4	digit 5	Authorization Code
13	Opcode	Authorization Code		
14	Opcode	Authorization Code		
15	Opcode	Time in Queue		FRL
16	Opcode	5th Digit, Calling Ext	Incoming Circuit ID digit 1	digit 2
17	Opcode	Feature Flags* I A Q D	Outgoing Circuit ID digit 1	digit 2
18	Opcode	Out Circuit ID digit 3	In Circuit ID digit 3	IXC Code

Variable-Length Account Code†

*Feature Flags:
I = Invalid, A = Answer Supervision, Q = Queuing Type, D = Data Call

† The Account Code can vary in length from 1 to 15 digits. The length is administered in Procedure 275, Word 1. If the Account Code exceeds five digits, the Authorization Code is lost. If it exceeds 12 digits, the Time-in-Queue field is lost. If 15 digits long, the FRL field is lost.

Figure 34-3. Standard 18-Word Default Record

USER OPERATIONS

The following are the user operating procedures for this feature.

General

The CMDR feature reports on selected trunk groups. These trunk groups are identified in local switch translations described later under ‘‘Feature Administration.’’ Once a trunk group has been identified as reportable, actual reporting is controlled from an attendant console at the recording switch. The attendant can control (turn on or off) reporting on an individual trunk group basis.

Activating Trunk Group Recording

To start call data recording for a trunk group at an attendant console:

- Press an idle loop button. [PA lamp goes out.]
- Press the START button. [Dial tone]
- Dial the SMDR—Start access code. [Second dial tone]
- Dial the access code for the desired trunk group. [Recall dial tone]

  NOTE: The previous step can be repeated for various trunk groups.
- Press the RELEASE button. [PA lamp lights.]

Deactivating Trunk Group Recording

To stop recording for a trunk group at an attendant console:

- Press an idle loop button. [PA lamp goes out.]
- Press the START button. [Dial tone]
- Dial the SMDR—Stop Access Code. [Second dial tone]
- Dial the access code for the trunk group you want to stop recording. [Recall dial tone]

  NOTE: The previous step can be repeated for various trunk groups.
- Press the RELEASE button. [PA lamp lights.]

Polling and Reporting

The polling arrangement used for centralized data collection and reporting is a matter of user preference. The 93B CPS is a standard system available for this purpose. It is compatible with the 94A LSU and System 85; however, other systems could be devised for this purpose. The following is an example of how a polling arrangement using the 93B CPS could operate.

Determining LSU Requirements

The number of LSUs needed at a particular switch is a function of the level of call activity being recorded and the polling scheme used. Frequent or continuous polling requires fewer LSUs. To calculate the amount of memory required for a given switch, the following procedure is used.

- Determine the polling technique that will be used (see *Polling Options*).
- Calculate the maximum *Record Density*.
- Determine LSU requirements from Table 34-D.
- Determine *LSU Memory Requirement.*
- Calculate *Polling Time Required* to establish a polling schedule.

Table 34-4. Values of LIM

Direct Output	Full Time Polling	After Hrs Polling	LSUs Needed
108.1	120.0	64.0	1
216.2	240.0	128.0	2
324.3	360.0	192.0	3
432.4	480.0	256.0	4
540.5	600.0	320.0	5
648.6	720.0	384.0	6
756.7	840.0	448.0	7
864.8	960.0	512.0	8

The values given in the columns of Table 34-B are the LIM values for the polling system shown in the column headings. This LIM value represents the limit or maximum number of records that can be supported by a given number of LSUs for each type of polling arrangement. If the value of MAX (the maximum number of records to be generated for a given system between polling cycles) is equal to or less than the LIM value shown, the number of LSUs needed is shown in the right-hand column. The value of MAX is determined by the *Record Density Estimation* calculations.

Polling Options: Two basic polling options are available:

Full Time Polling

Polling is initiated at a specific time (i.e., the beginning of each hour) and is continued until the LSU memory is empty. This process is repeated cyclicly. That is, if the start polling time is set for the beginning of each hour; the polling cycle will begin again at the beginning of each hour. In this way, if four switches are being polled from a single CMDR polling station and each switch requires less than 15 minutes to complete polling, the cycles could be started at 15-minute intervals. The first switch is polled at the beginning of each hour, the second switch 15 minutes later, and so on.

After Hours Polling

Polling only takes place after the busy period of the day or during periods of minimal call activity. This method is not recommended because if link problems develop or a power failure occurs before polling takes place, records could be lost.

For any given system, the After Hours method requires the most LSU memory, and the Full Time method requires the least LSU memory.

Record Density Estimation:

a. If the daily total of calls to be recorded is known, use that number for MDRs (Message Detail Records). Otherwise, MDR can be estimated from the BHC (busy hour call) rate using the following formula:

$$MDR \simeq (10/3) \times BHC$$

b. The maximum value for LIM is then estimated as follows:

$$MAX = (MDR + 5\sqrt{MDR}) / 1000$$

$$MAX \leq LIM$$

Determining Memory Requirements: The memory capacity of a single LSU depends on the type of memory circuit used. Two types are available: the LC316 with 4K of memory and the LC459B with 16K of memory. Four memory units can be combined for each LSU, to provide memory capacity from 16K to 64K. Selection is made on the basis of cost and requirement. Three LC316 circuit boards provide 12K of memory and cost more than one LC459B circuit board with 16K of memory. The following steps are used to determine the memory requirements for a system and the memory board configuration needed in the LSUs used:

- Let LMAX = MAX / LSUs*

  (*the number of required LSUs as determined using Table 34-D)

- Then if your polling scheme is:

Direct Output:

For: $LMAX \leq 31.5$, $MEM = .2 \times LMAX$

For: $31.5 < LMAX \leq 63.0$, $MEM = .4 \times LMAX - 6.3$

For: $63.0 < LMAX \leq 108.1$, $MEM = LMAX - 44.1$

Full Time Polling:

For: $LMAX \leq 40$, $MEM = .4 \times LMAX$

For: $40 < LMAX \leq 80$, $MEM = .4 \times LMAX - 8$

For: $80 < LMAX \leq 120$, $MEM = LMAX - 56$

After Hours Polling:

For: $LMAX \leq 192$, $MEM = LMAX$

Calculate Polling Time Required: The number of 93B polling ports and polling schedules can be

determined from the total port polling time. This is calculated as:

TPT (Total Polling Time) = (MAX / 8) hours

CONSIDERATIONS

ASCII Character Code

All CDR ports output the standard ASCII character code.

Attendant Assisted Completion

If Forced Entry of Account Code is active on a particular terminal, calls directed to the attendant by dialing the attendant access code shall not require an account code for completion.

If an account code is desired by the customer, the attendant may enter the account code.

Attendant Originated Call

The attendant is not required to enter an account code for any call, but shall be permitted to do so.

Cabinet Separation

The SMDR cabinet must be located within 200 feet of the common control cabinet because of high-speed data transmission between the two systems. It is not permissible to locate the SMDR cabinet in another building because of the possibility of extensive lightning damage.

CAS (Centralized The CMDR feature is compatible with the CAS feature. The call record shows calls extended by either a centralized attendant or backup voice terminal.

CDR Portability CDR records can be output to all the ports simultaneously.

Memory Overload Overload of memory can cause the output of partial records. This can be avoided by using the 9-track tape storage unit.

Multidigit Steering

The call record shows calls to DCA (Data Communications Access) ports and calls to Main/Satellite locations over Main/Satellite trunks. When these calls are placed using Multidigit Steering, the call record shows both the dialed extension number and the dial access code of the associated outgoing trunk group.

Multiple Records on Network Calls In a network environment where the SMDR feature is used on multiple nodes, the same call is recorded separately on each node where a recordable trunk circuit is used.

Unsuccessful Call Records

Incoming calls and outgoing AAR or ARS calls that are not completed for any reason (unsuccessful calls) can be recorded as such by SMDR depending on system translations. If the system is translated for ineffective call recording (see Feature Administration), unsuccessful calls will be identified in the call record as such. If ineffective call recording is not administered, unsuccessful incoming calls and unsuccessful AAR or ARS calls will not be identified. An unsuccessful call can result from any of the following:

- All trunks are busy and no queuing exists, or all queue slots are busy.

- The call queues but never completes because the caller either abandons the call (hangs up), or the call remains in queue for the maximum time allowed and is released by the system.
- The FRL is not high enough to allow access to an available route in the route list.
- The caller dials the toll-restricted access code, and only toll routes are available.
- An incoming call is placed to an unavailable (busy or unassigned) terminal.

Variable Call Completion Thresholds

The system scans each call record once every 6 seconds. The call duration timer is normally started as soon as a recordable call is found to be active (resulting in a timing accuracy limit of 6 seconds). This compensates to some degree for time spent waiting for the far end of a call to answer. Users can increase the delay time (before the call duration counter is started) by administering a start timer that delays starting the duration time by up to 99 seconds. This can be done on an individual trunk group basis and a system basis. The individual trunk group setting takes precedence if used.

INTERACTIONS WITH OTHER FEATURES

The following System 85 features affect or are affected by the operation of the CMDR feature.

Abbreviated Dialing

Outgoing calls are recorded by this feature as though they were manually dialed.

Attendant Call Waiting

The CDR unit records the called extension number, as well as the account code (if dialed) for attendant-assisted incoming calls using the Attendant Call Waiting feature.

AAR (Automatic Alternate Routing)

Valid account codes are required for trunk groups within an AAR pattern that have FEAC (Forced Entry of Account Codes) applied to them. FEAC within an AAR pattern must be administered on a trunk group basis. If a FEAC trunk group appears in a routing pattern, and the account code has not been dialed, AAR will skip that trunk group.

ACD (Automatic Call Distribution)

The extension number of the answering agent in an ACD call, is recorded by the CDR unit as the called number, rather than the split LDN (listed directory number).

Automatic Route Selection

If terminal class of service, or system class of service require an account code (FEAC active), and a code is not dialed, ARS will route the call attempts to intercept treatment. If a FEAC trunk group appears in a routing pattern, and the account code has not been dialed, ARS will skip that trunk group.

Call Forwarding—Busy and Don't Answer

The call record shows the extension number that the Call Forwarding—Busy and Don't Answer feature directed the call to as the called number.

If a user establishes call forwarding outside, other users may attempt to call that extension and be routed over facilities which they might not have permission to access without an account code (because of FEAC). The callers would dial the extension number and be denied without a clear indication of why.

A terminal whose class of service requires an account code (administered through FEAC) entry, shall be denied the ability to set up call forwarding off the switch in other than a DCS (Distributed Communications System) environment (only to terminal extensions within the DCS).

If the system class of service requires an account code (administered through FEAC), all forwarding outside will not be permitted through the ARS feature.

Call Forwarding—Don't Answer

The extension number that the Call Forwarding—Don't Answer feature forwarded to is recorded by the 93B-CMDR unit as the called number. Refer to the Call Forwarding—Busy and Don't Answer interaction for details on FEAC interactions.

Call Forwarding—Follow Me

The extension number that the Call Forwarding—Follow Me feature forwarded to is recorded by the 93B-CMDR unit as the called number. Refer to the Call Forwarding—Busy and Don't Answer interaction for details on FEAC interactions.

Call Park

The final destination voice terminal in a Call Park connection is recorded by the CDR unit as the called number.

Call Pickup

The terminal using Call Pickup (the terminal that actually answered the call) is recorded by the CDR unit as the called number.

CAS (Centralized Attendant Service) Compatibility

The CMDR feature is compatible with the CAS feature. The call record shows calls extended by a centralized attendant or a backup voice terminal.

CDRR (Call Detail Recording and Reporting)

The CDRR, SMDR, and CMDR features all use the same data base record of the switch (CDR record). The SMDR feature uses a 15-word output that is the same as the first 15 words of the 18-word output used for CMDR. If SMDR is used on the same switch with a CMDR Interface, the number of LSUs available for CMDR purposes is limited to seven. If SMDR is not used, the SMDR port can be administered as an eight 18-word LSU port.

Conference—Attendant Six Party

The attendant can dial the CMDR access code and account code before adding a voice terminal or a trunk to a conference. When the codes are dialed, the 93B-CMDR unit records the trunk or voice terminal number.

Conference—Three Party

If an account code had already been dialed to establish the original connection, the dialing of the new account code to add the second party will create a new a call detail record.

If an established call is extended to a trunk using the conference or transfer features, the following FEAC rule applies: If an account code had already been dialed to establish the original connection, the dialing of a new account code to add the second party would result in two CDR records.

DDC (Direct Department Calling)

For incoming calls, the 93B-CMDR unit records the answering agent’s extension rather than the LDN (listed directory number) as the called number.

EUCD (Enhanced Uniform Call Distribution)

For incoming EUCD calls, the CDR unit records the answering agent's extension (the extension that actually answers the call) rather than the split's LDN (listed directory number) as the called number.

Hunting

The 93B-CMDR records the hunted-to extension number (the extension that actually answers the call) as the called number.

Intercept Treatment—Attendant

If an incoming trunk call receives Intercept Treatment and is routed to the attendant, the call record looks as if the attendant had been dialed directly. This interaction occurs regardless of whether recording of ineffective attempts is active or not.

Loudspeaker Paging Access

With an incoming call waiting, the attendant can dial the CMDR access and account code, and then use Loudspeaker Paging Access. The call is recorded by the 93B-CMDR unit, but the page is not.

NCOSS (Network Control Operations Support System)

The CMDR Interface uses the same ports and LSUs used by the NCOSS feature.

Personal Central Office Line

The CDR feature does not record calls made on Personal CO (Central Office) Lines. Personal CO lines are for direct access to the Central Office, and therefore not provided all the features of a PBX terminal extension. FEAC is not applicable to Personal CO lines.

APLT (Advanced Private Line Termination)

— Incoming Tie Trunk Calls

If a calling party dials an account code and then calls across a tie trunk to an attendant on another network node, the account code is recorded at the originating node. The attendant at the terminating node must enter the account code to record it at that node.

— Outgoing Tie Trunk Calls

If a calling party dials an CMDR account code and then calls the attendant, the account code is dropped. However, the attendant can reenter the account code before extending the call across the tie trunk.

Route Advance

The rules for forced account code entry apply to route advance trunk groups as well as the primary trunk group.

If a user has not dialed an account code, trunk groups which require the account code in the route advance list shall be skipped.

Serial Calls

The 93B-CMDR records each call in a serial call, including call duration.

Through Dialing

Whenever the attendant allows Through Dialing by a voice terminal user, the CMDR record shows the call as an attendant-assisted call. If an account code is used, the attendant must dial the account code before dialing the trunk access code.

SMDR (Station Message Detail Recording)

Same as CDRR (Call Detail Recording and Reporting). Call records are not maintained during the execution of SMDR link-test procedure. This link-test prevents the CDR record from outputting to the SMDR port.

Transfer

The 93B-CMDR records the last voice terminal connected to a Transfer call as the called number.

UCD (Uniform Call Distribution)

Same as the interaction for ACD.

Trunk Verification

The use of trunk verification by either the attendant or the maintenance terminal(s) shall not require the entry of an account code under any circumstances.

Trunk-to-trunk Connections

Calls incoming from a tie trunk to an outgoing trunk shall not require an account code under any circumstances.

Trunk-to-trunk Connections

Calls incoming from a tie trunk to an outgoing trunk shall not require an account code under any circumstances.

Unattended Console Service

Calls routed to a night terminal due to either dialing of the attendant access code or by encountering an intercept situation will require the forced account code as determined by the options set for the night terminal since the call will be processed as a Three Party Conference/Transfer after it has been answered by the night station.

RESTRICTING FEATURE USE

The local attendant console turns CMDR (switch data base) recording on or off on an individual trunk group basis. Before this can be done, trunk groups must first be administered as reportable to the CMDR feature through system administration procedures, described later.

R2 V4 CHANGES TO EXISTING DATA ITEMS

- Answer Supervision in Feature Flag. A Feature Flag bit position is now being used to indicate Answer Supervision.

HARDWARE REQUIREMENTS

The CMDR Interfacing hardware is preassembled and installed as a unit. The major hardware components for the CMDR feature include the following.

Switch Hardware Required for CMDR Interface

- Data Channel Circuit Pack, TN403. Up to eight circuits (seven if SMDR is also used). Circuits 14 and 15, Carrier 0, Slots 23 to 26 can be used for CMDR Interface connections. If SMDR is also used on the switch, Circuit 15, Slot 23 is reserved for that purpose.

External Hardware used for CMDR Interface

- 94A Local Storage Unit
- 93B Customer Premise System Polling Unit.

A more complete description of the hardware needed for the CMDR Interface is provided in Section 555-100-205 IS, Reference Manual, Station Message Detail Recording (SMDR) System Description. Refer to the 555-006-202 CDR Reference Manual for more information.

FEATURE ADMINISTRATION

The CMDR feature is assigned on a per-system basis. Call detail reporting is assigned on a per-trunk group basis within the system.

This feature is administered using the MAAP (Maintenance and Administration Panel). The customer can partially administer this feature using the SMT (System Management Terminal) or the TCM (Terminal Change Management) feature. This feature can also be administered using CSM (Centralized System Management).

The applicable MAAP and SMT procedures are as follows.

MAAP AND SMT PROCEDURES —MESSAGE DETAIL REPORTING			
PROCEDURE	**WORD**	**PURPOSE**	**SMT**
000	1	Assigns the voice terminal class of service to an extension number.	Yes
010	2	Assigns Forced Account Code Entry to a voice terminal class of service.	Yes
101	1	Assigns SMDR Active and variable start timer to reportable trunk groups. This procedure also assigns Forced Account Code Entry for the trunk group (enter ‘‘2’’ in Field 8).	No No
253	—	Assigns TN403 data channels to type 5 for SMDR.	No
275	1	Assigns SMDR to the system class of service, assigns the account code length, and activates recording of calls on incoming trunks. This procedure also assigns Forced Account Code Entry for ARS calls (Enter ‘‘2’’ in Field 12).	Yes
275	3	Administers timing delay (from 0 to 99 seconds in 6-second increments) for the variable start timer. Used for individual trunk groups and the system default.	Yes
285	—	Administers the prefix for the SMDR account numbers. Also, use this procedure to administer either 15- or 18-word message lengths.	Yes
286	1	Assigns the recording of ineffective attempts to the network class of service.	Yes
288	1	Performs the REMOVE-EXECUTE function in order to change the CDR record length, opcode indicator, and a field to indicate variable or fixed format. Also specifies record length for SMDR ports.	Yes
350	1	Assigns the first digit of the feature dial access codes.	No
350	2	Assign the SMDR dial access codes. The applicable encodes are as follows: 36 SMDR—Account Number 37 SMDR—Start 38 SMDR—Stop.	No

The following is the applicable TCM path name used with the AP 16.

TCM SCREEN — CENTRALIZED SMDR INTERFACE	
PATH NAME	**PURPOSE**
terminal-change system parameters (select the Access-Codes option)	Assigns the SMDR account code length.

The following are the applicable CSM Command Paths utilizing the **admin** area of TCM or FM.

CSM SCREENS — MASKS CENTRALIZED MDR INTERFACE		
APPL'N	**OBJECT**	**PURPOSE**
TCM	extension	Assigns the voice terminal class of service to an extension number.
TCM	class-of-service	Assigns the Forced Account Code Entry to a voice terminal class of service.
FM	trk-grp	Assigns CDR reporting to trunk groups, and assigns the variable start timer for reportable trunk group.
TCM/FM	sys-cos	Assigns SMDR to the system class of service, assigns the account code length, and activates recording of calls on incoming trunks. Administers the timing delay (from 0 to 99 seconds in 6-second increments) for the variable start timer.
TCM/FM	sys-cos	Administers the prefix for the SMDR account numbers and administers either the 15- or 18-word message lengths. Assigns the recording of ineffective attempts to the network class of service.
TCM/FM	first-digit	Assigns the first digit of the feature dial access codes (if required).
TCM/FM	dial-access-code	Assigns the SMDR dial access codes.

CODE CALLING ACCESS

DESCRIPTION

This feature allows attendants, voice terminal users, and tie trunk users to page a specific individual using audible coded signals. The coded signals consist of chimes distributed by a loudspeaker system. The called party answers the page by dialing an answer-back code from any voice terminal within the switch.

This feature is especially useful for alerting people who are frequently away from their desk: e.g., supervisors, security, or maintenance personnel. This feature also provides an option to have music while waiting for an answer-back.

Signaling

The code calling chime signals are 892-hertz tones. To resemble chiming, the volume of these tones is gradually reduced to silence.

One or more tone bursts are combined sequentially to represent a single digit of the 2- or 3-digit Called Party code. The interval between successive tone bursts is approximately 0.5 seconds. However, this interval can be selected (using switch settings on the SN253) to provide a desirable rate of chiming or to optimize the chiming rate for the customer-provided equipment. The interval between successive digits of the Called Party code is approximately 1.5 seconds. The Called Party code is sounded three times. The interval preceding each repetition of the Called Party code is approximately 4.5 seconds.

After the Called Party code has sounded the third time, the associated code calling trunk becomes idle in 5 seconds. It is then ready for the next service request.

Feature History and Development

This feature was first available on System 85 in Release 1. An option to have music while waiting for an answer-back was added for Release 2, Version 3.

USER OPERATIONS

The following are the user operating procedures for this feature.

To Page Someone Using Code Calling Access

From a voice terminal with the user remaining off-hook:

- Go off-hook. [Dial tone]
- Dial the Code Calling Access code. [Second dial tone]
- Dial the 2- or 3-digit called party code. [Confirmation tone is heard followed by chimeback tone. Ringback tone or music is heard while waiting for the answer-back.]
- User waits off-hook until the paged party answers the page. [The paging and paged are connected. Ringback tone or music is removed, and the called party code circuit is released.]

From a voice terminal with the user going on-hook:

- Go off-hook. [Dial tone]
- Dial the Code Calling Access code. [Second dial tone]
- Dial the 2- or 3-digit called party code. [Confirmation tone is heard followed by chimeback tone. Ringback tone or music is heard while waiting for the answer-back.]
- The user goes on-hook to wait for a call back. [Ringback tone or music is removed, and the called party code is released.]

From the attendant console with the attendant remaining on the loop:

- Press an idle loop button. [ATND lamp lights. If lit, the PA lamp goes out.]
- Press START. [Dial tone]
- Dial the Code Calling Access code. [Second dial tone]
- Dial the 2- or 3-digit called party code. [Confirmation tone is heard followed by chimeback tone. Ringback tone or music is heard while waiting for the answer-back. RING lamp lights.]
- Attendant stays on the loop until the paged party answers the page. [The attendant and paged party are connected. Ringback tone or music is removed, and the called party code is released. ANS lamp lights.]
- When finished with the paged party, press RELEASE. [ATND and ANS lamps go out. PA lamp lights.]

From the attendant console when the attendant releases the loop:

- Press an idle loop button. [ATND lamp lights. If lit, the PA lamp goes out.]
- Press START. [Dial tone]
- Dial the Code Calling Access code. [Second dial tone]
- Dial the 2- or 3-digit called party code. [Confirmation tone is heard followed by chimeback tone. Ringback tone or music is heard after chimeback tone. RING lamp lights.]

- Press RELEASE to wait for a return call. [The ATND and RING lamps go out, the PA lamp lights, and the called party code is released.]

To Answer a Coded Call Page When the Paging Party Remains Off-Hook:

- Go off-hook. [Dial tone]
- Dial the Code Calling answer-back access code. [Second dial tone]
- Dial the 2- or 3-digit called party code. [The called party is connected to the calling party. Confirmation tone is heard by both parties.]

To Answer a Coded Call Page When the Paging Party Goes On-Hook:

- Go off-hook. [Dial tone]
- Dial the paging party's number. [Ringback tone]

CONSIDERATIONS

Intercept Tone

Intercept tone is heard when:

- An invalid Code Calling access code is dialed.
- An invalid called party code is dialed.
- The tone generating circuit is out of service.
- An attendant console attempts to answer a page.
- The calling party did not remain off-hook while waiting for a response from the called party.

Busy Tone

Busy tone is heard when another party has seized the code calling circuit. Busy tone is also heard if the code dialed is awaiting callback.

Called Party Codes

The Called Party codes can consist only of a combination of the digits 1 through 5. The switch returns intercept tone when the digits 6 through 9 or 0 are dialed. Three-digit codes provide a maximum of 125 Called Party codes. Two-digit codes provide up to 25 Called Party codes.

Answer-Back Maximum

At any one time, as many as six voice terminal users can wait for Answer-Back.

Calling Back the Paging Party

The paged party must be aware of the paging party's number if the paging party goes on-hook before being called by the paged party.

INTERACTIONS WITH OTHER FEATURES

The following System 85 features affect or are affected by the operation of this feature.

Call Park

Enabling Code Calling Access also enables Call Park.

Loudspeaker Paging Access

The Code Calling Access and Loudspeaker Paging Access features may use either common amplifiers and speakers or separate amplifiers and speakers. At all times, whether common or separate equipment is used, take care that both features are not used at the same time. Simultaneous use produces interference between the two audible signals. To prevent this interference, the lockout option on the 89A control unit can be set. This option allows only one feature at a time to access the amplifier and speaker equipment.

Music-on-Hold Access

When Music-on-Hold is implemented, music can be provided for a call on hold in an answer-back channel.

Restriction—Toll Restriction

Terminal lines with Toll Restriction in the line class of service cannot use the number ‘‘1’’ as a first or second digit of the Code Calling Access code or answer-back code.

RESTRICTING FEATURE USE

Code Calling Access can be busied-out by making a switch closure between COS1 and COS2 of the 89A control unit.

HARDWARE REQUIREMENTS

The Code Calling Access feature requires the following additional or special hardware.

- An SN253 auxiliary tone plant
- An 89A control unit
- A 2012D transformer to supply power to the control unit

- Customer-provided equipment to provide audible tones [an amplifier and speaker(s)].

FEATURE ADMINISTRATION

Assignment of the Code Calling Access feature is on a per-system basis.

This feature is administered using the MAAP (Maintenance and Administration Panel). The customer can partially administer this feature using the SMT (System Management Terminal) or the TCM (Terminal Change Management) feature. This feature can also be administered using CSM (Centralized System Management).

To provide music while waiting for answer back, the Music-on-Hold feature must also be assigned.

The following are the applicable MAAP and SMT procedures.

MAAP AND SMT PROCEDURES — CODE CALLING ACCESS

PROCEDURE	WORD	PURPOSE	SMT
000	1	Assigns the class of service to an extension number.	Yes
010	3	Assigns a Miscellaneous Trunk Restriction group to a voice terminal class of service.	Yes
100	1	Assigns the dial access code and trunk type of the Code Calling Access trunk group.	No
102	—	Assigns Code Calling Access to a Miscellaneous Trunk Restriction group.	Yes
202	1	Administers the Direct Trunk Group Selection button for the attendant console.	No
252	2	Administers the SN253 auxiliary tone plant for use with chime paging.	No
275	1	Assigns Code Calling Access to the system class of service and assigns the music-on-hold option (Field 7).	Yes
275	4	Specifies the number of Code Calling Access digits for system class of service.	Yes
350	1	Assigns the first digit of the dial access code (if required).	No
350	2	Assigns the answer-back dial access code. The applicable encode is: 18 Code Call answer-back.	No

The following are the applicable TCM path names used with the AP 16.

TCM SCREENS — CODE CALLING ACCESS	
PATH NAME	**PURPOSE**
terminal-change class-of-service attributes	Assigns a Miscellaneous Trunk Restrictions group to a voice terminal class of service.
terminal-change extensions attributes	Assigns the class of service to an extension number.

The following are the applicable CSM Command Paths utilizing the **admin** area of TCM or FM.

CSM SCREENS — MASKS CODE CALLING ACCESS		
APPL'N	**OBJECT**	**PURPOSE**
TCM	extension	Assigns the class of service to an extension number.
TCM	class-of-service	Assigns a Miscellaneous Trunk Restriction group to a voice terminal class of service.
FM	trk-grp	Assigns the dial access code and trunk type for the Code Calling Access trunk group.
FM	misc-trk-rst-grp	Assigns Code Calling Access to a Miscellaneous Trunk Restriction group.
TCM	direct-trk-grp-keys	Administers the Direct Trunk Group Selection button for the attendant console.
TCM/FM	sys-cos	Assigns Code Calling Access to the system class of service and assigns the Music-On-Hold option. Specifies the number of Code Calling Access digits for system class of service.
TCM/FM	first-digit	Assigns the first digit of the dial access code (if required).
TCM/FM	dial-access-code	Assigns the answer-back dial access code.

CONFERENCE—ATTENDANT SIX PARTY

DESCRIPTION

This feature allows an attendant to set up a conference for up to six conferees, plus the attendant. Conferees do not need to be on the same switch. External conferees can be included in a conference call.

Once the conference has been established, the RELEASE button on the Attendant Console removes the attendant from the conference. The HOLD button holds the conference on the attendant console. An internal conferee (a conferee on the host switch) can recall the attendant for assistance or to add conferees.

Feature History and Development

This feature was first available on System 85 in Release 1. An administrable recall button is provided for R2 V4 and was also retrofitted to the R2 V2 and R2 V3 software packages.

USER OPERATIONS

The following are the user operating procedures for this feature.

To Establish a Conference or Add a Conferee:

- At the attendant console, after receiving instructions from the party requesting the conference, press the CONF key. (Requesting party is connected to the conference circuit.)
- Call each successive conferee individually using the DXS and DTGS features, or by pressing the START key and dialing the applicable trunk access code and [or] extension number.
- Announce the conference.
- Press the CONF key. (New party is added to the conference circuit.)
- Repeat the above steps until all conferees are included.
- Press the RELEASE button to exit the conference completely, [PA lamp lights]

  or

- Press the HOLD button if attendant assistance will be needed later. [Held loop lamp lights, and PA lamp lights.]

To Recall the Attendant Into the Conference (by Any Local Conferee)

— For terminals without a RECALL button:

- Momentarily press the switchhook.

— For terminals with a RECALL button:

- Press the RECALL button.

To Reenter the Conference (as an Attendant):

- At the attendant console, press the appropriate loop button. (Attendant is connected to the conference circuit.)

CONSIDERATIONS

Attendant Service to Multiple Conferences

An attendant can be connected to only one conference at a time. To start another conference, the attendant can hold the first conference on the console or release from the conference call.

Trunks Only Conferences

If an attendant releases a conference connection with only trunk conferees, the conference circuit goes idle, and the trunk circuits are released. To avoid this, place the conference on hold.

Transmission quality deteriorates if more than two trunks are connected to a conference circuit.

System Limits

As many as 13 conference circuit packs (SN254) can be installed on the System 85 switch, providing for up to 13 simultaneous conferences.

A single attendant console has only one CONF button, regardless of the number of conference circuits provided in the switch.

Administrable Recall Buttons

Some multiappearance voice terminals do not have a fixed RECALL button. If RECALL buttons are needed for these voice terminals, RECALL buttons can be assigned to the terminals using Procedure 054, Word 1.

INTERACTIONS WITH OTHER FEATURES

The following System 85 features affect or are affected by the operation of this feature.

Attendant Call Waiting

Attendant Call Waiting is denied when the attendant is attempting to add a busy called party to an attendant established conference.

Attendant Display

The Attendant Display feature is denied to an attendant when the attendant is connected to a conference circuit.

Bridged Call

For voice terminals with bridge-on capability, it is possible to have the bridged-on party involved in an attendant established conference though not actually connected to the conference circuit. However, transmission quality may degrade.

Busy Verification of Lines

Busy Verification of Lines is denied when attempted toward a line connected to a Conference—Attendant Six Party call.

CMDR (Centralized Message Detail Recording)

If the attendant wants to add a terminal or a trunk to a conference, the SMDR access code and account code could be dialed before the trunk or terminal number is dialed and added to the connection. The trunk or terminal number is recorded.

Call Waiting

Call Waiting is denied when the called terminal is involved in an attendant established conference call.

Dial Access to Attendant

The requesting party (first member of the conference) can use Dial Access to Attendant and be connected to the conference circuit. However, once an attendant conference has been started, a station user cannot use Dial Access to Attendant and be added to an active conference circuit. The attendant must initiate the contact to add a party to an active conference circuit.

Extension Number Portability

Only the attendant console and local voice terminals can provide the disconnect supervision required to release a conference circuit once the conference is finished. Since the attendant may be unaware of which extension numbers are local and which ones have been ported (ported extensions connect to the local switch via a tie trunk), all conferences should be held on the console until completion. If the attendant releases a conference from the console when only trunks are involved, the switch drops the conference automatically to prevent the conference from locking up.

Hold

Voice terminal users who are participating in an attendant conference connection are denied access to the Hold feature.

Loudspeaker Paging Access

When establishing a Conference—Attendant Six Party call, an attendant cannot connect the conference connection to the paging loudspeakers.

Override

Any attempt to use Override toward a terminal that is connected to a attendant conference is denied.

Precedence Calling

If a tie trunk being used on an attendant conference is preempted by the Precedence Calling feature, all parties to the conference will hear preemption warning tone. The affected trunk will then be made idle, and the conference call will remain in effect minus the preempted trunk circuit.

Priority Calling

Priority Calling is denied when the called terminal is involved in an attendant established conference call.

Privacy—Attendant Lockout

When the attendant reenters a conference connection in answer to a recall, the attendant connects to all conferees. Privacy is denied.

Remote Access

A remote access user can be a member of an attendant established conference only as the conference requester (first party added to the conference circuit).

Restriction—Voice Terminal Restrictions

An Inward restricted terminal may be added to an established connection involving an incoming trunk via the Conference—Attendant Six Party.

Serial Calls

The Serial Calls feature is denied when the called party is involved in an attendant established conference.

SMDR (Station Message Detail Recording)

If the attendant wants to add a terminal or a trunk to a conference, the SMDR access code and account code could be dialed before the trunk or terminal number is dialed and added to the connection. The trunk or terminal is recorded.

Tenant Services

The SN254 attendant conference circuits (as many as 13) are not partitioned. These trunks, when provided, are equally accessible to an attendant in any attendant partition needing them.

After a voice terminal or trunk user (the first conferee) calls an attendant (in a partition other than Attendant Partition 0) to establish a conference, the attendant is only allowed to add conferees that would otherwise have access to the first conferee who is not a member of Extension Partition 0.

An extension in Extension Partition 0 can be included in any attendant conference.

An attendant in Attendant Partition 0 is allowed to add conferees from any partition in the switch or from over any trunk group to an attendant conference.

An attendant recall by a conferee is usually directed to the attendant partition associated with that conferee's extension partition. However, when the establishing attendant has placed the conference on hold, an attendant recall by any of the conferees is directed to that attendant.

Timed Recall on Outgoing Calls

The Timed Recall on Outgoing Calls feature does not apply to an attendant conference connection.

Trunk Group Busy/Warning Indicators to Attendant

When Conference—Attendant Six Party is provided, the associated trunk-group warning indicator is lighted when six conferees are connected to the conference circuit. The trunk-group warning indicator is extinguished when less than six conferees are connected to a conference circuit and when the attendant releases from the conference. The trunk-group warning indicator lights only on the console that is controlling the conference circuit.

Trunk Verification—Attendant and Voice Terminal

Trunk Verification may not be used toward a trunk that is involved in an attendant conference connection.

Unattended Console Service—Preselected Call Routing and Call Answer From Any Voice Terminal

If the attendant releases a Conference—Attendant Six Party call and then changes to an Unattended Console Service feature, attendant recall is denied. The conference must be held on the console prior to starting the Unattended Console Service feature to provide attendant service. When attendant recall is used from a conference held on the attendant console, the recall is activated toward the attendant console where the call is held even if Unattended Console Service is in effect.

Variable Format Call Detail Recording

The attendant can dial the CDR access code and account code before adding a voice terminal or a trunk to a conference. When the codes are dialed, the CDR records the trunk or voice terminal number.

HARDWARE REQUIREMENTS

The Conference—Attendant Six Party feature requires the following hardware.

- One SN254 conference circuit pack per conference (maximum of 13 conference circuit packs per switch).

FEATURE ADMINISTRATION

Assignment of the Conference—Attendant Six Party feature is on a per-system basis.

This feature is administered using the MAAP (Maintenance and Administration Panel). The customer can partially administer this feature using the SMT (System Management Terminal). This feature can also be administered using CSM (Centralized System Management).

The following are the applicable MAAP and SMT procedures.

MAAP PROCEDURES
CONFERENCE—ATTENDANT SIX PARTY

PROCEDURE	WORD	PURPOSE	SMT
054	1	Assigns the RECALL button to a multiappearance voice terminal without a fixed RECALL button. The applicable encode is: 27 Recall.	Yes
100	1	Administers the Dummy dial access code and the trunk type.	No
150	—	Assigns the SN254 equipment location of an attendant conference circuit pack to its trunk-group number.	No
202	1	Assigns the CONF (Direct Trunk Group Selection) button to the attendant console(s).	No
204	1	Assigns the desired alphanumeric display for an attendant conference call.	No
350	1	Assigns the first digit of the dial access code for the attendant conference circuit (if required).	No

The following are the applicable CSM Command Paths utilizing the **admin** area of TCM or FM.

CSM SCREENS — MASKS CONFERENCE — ATTENDANT SIX PARTY		
APPL'N	**OBJECT**	**PURPOSE**
TCM	This command will be set type: i.e., 36-button, 12-button, pt510, vds, bct, idt, feature-module, or coverage-module.	Assigns the RECALL button to a multi-appearance voice terminal without a fixed RECALL button.
FM	trk-grp	Administers the Dummy dial access code and the trunk type. Assigns the equipment location of an attendant conference circuit pack to its trunk-group number.
TCM	console-features	Assigns the CONF (Direct Trunk Group Selection) button to the attendant console(s).
TCM	console-messages	Assigns the desired alphanumeric display for an attendant conference call.
TCM/FM	first-digit	Assigns the first digit of the dial access code for the attendant conference circuit (if required).

CONFERENCE—THREE PARTY

DESCRIPTION

This feature allows voice terminal users to set up 3-party conferences without attendant assistance. This is done by adding the third party to an established 2-party connection. Participants can include stations that are external to the switch.

Feature History and Development

This feature was first available on System 85 in Release 1. There have been no changes to this feature since its introduction.

USER OPERATIONS

The following are the user operating procedures for this feature.

To Establish a 3-Party Conference From a 2-Party Connection

For Terminals Without CONFERENCE, RECALL, or TRANSFER Buttons:

- Momentarily press switchhook. [Recall Dial Tone] (Connected party is put on soft hold.)
- Dial the third party. Wait for answer.
- Momentarily press switchhook. (3-way conference)

For Terminals With a RECALL Button but Not CONFERENCE and TRANSFER Buttons:

- Press the RECALL button. [Recall Dial Tone] (Connected party is put on soft hold.)
- Dial the third party. Wait for answer.
- Press the RECALL button. (3-way conference)

For Terminals With CONFERENCE and TRANSFER Buttons:

- Press the CONFERENCE or TRANSFER button. [Dial Tone] (Connected party is put on hard hold.)

- Dial the third party. (To cancel conference request, press the appearance button of held call.)

  During ringback, or after the third party answers:

- Press the CONFERENCE button. (3-way conference)

To Drop the Third Party (while on 3-party connection, or with two parties ringing a third Party)

For Terminals Without a DROP Button:

- Momentarily press switchhook. (You are reconnected to the original party.)

For Terminals With a DROP Button:

- Press DROP.

Using Meet-Me Conference to Converse With Two Calling Parties On a Multiappearance Terminal:

- Be sure there is an active call on one appearance.
- Receive another call on an idle appearance. [Voice terminal rings.]
- Press the HOLD button to place the active call on hold. [Green status lamp flutters.]
- Select the ringing appearance. [The new call is now active.]
- Press the CONFERENCE button for the newly active call. [An idle appearance is automatically selected.]
- Select the held appearance. [The original call is again active.]
- Press the CONFERENCE button for this active call. [You and the two calling parties are now in a 3-way connection.]

CONSIDERATIONS

Trunk Connections

If the conference host (the System 85 terminal user) releases from a 3-party conference and both of the remaining conferees are on trunk circuits (stations external to the System 85), the switch may disconnect the remaining parties. This would occur if the trunk-to-trunk transfer option is not assigned, or if at least one of the trunks is not handling *an incoming call* to the System 85. The Trunk-to-Trunk Transfer option is assigned in the system class of service (see Feature Administration).

Hard and Soft Processor Swaps

A stable 3-party conference will endure a hard processor swap.

During a hard swap, a voice terminal user cannot establish a 3-party conference.

The Conference—Three Party feature operates normally during a soft processor swap.

INTERACTIONS WITH OTHER FEATURES

The following System 85 features affect or are affected by the operation of this feature.

ACD (Automatic Call Distribution)

When an ACD agent adds another agent to the agent's call, the resulting conference is not considered a work-related activity for the second agent. The second agent is not removed from the agent queue.

The Conference—Three Party feature is denied to an agent while an observer (using agent override) is connected to the agent's call.

A voice terminal user on a 2-party call is allowed to add the recipient of an ACD call to a 3-party conference. However, the second button press (of the switchhook, RECALL button, or CONFERENCE button) in the conferencing operation is ignored until the receiving agent has actually answered the call. (That is, the second button press is ignored while the call is queued.)

Bridged Call

Bridging is allowed on an appearance that is being held for conference.

For multiappearance voice terminals while bridging is active, the CONFERENCE button is inoperable during a bridged appearance call for both the controlling terminal (extension that originated the bridged call) and the bridged terminal. A user can bridge on after a conference is established.

For a straight line set while bridging is active, pressing the RECALL button (if provided) and momentarily pressing the switchhook are ineffective for both a controlling terminal and a bridged terminal. A user can bridge on after a conference is established.

Busy Verification of Lines

Busy Verification of Lines is denied when attempted toward a line connected to a Conference—Three Party call, unless the line appears on a multiappearance terminal with more than one appearance. In this case, the verification attempt routes to an idle appearance of the line, if any.

Call Coverage

After the call goes to coverage, when the covering user presses the CONFERENCE button, the temporary bridged appearance is removed from the principal's terminal.

A user attempting to activate the Conference—Three Party feature from a multiappearance terminal during

the caller response interval of a coverage call is denied. The button press is ignored.

Call Vectoring

A multiappearance voice terminal user on a 2-party call is allowed to add the recipient of a VDN call to a 3-party conference. However, the second press of the CONFERENCE button in the conferencing operation is ignored until the recipient of the VDN call has actually answered the call. (That is, the second button press is ignored during vector processing.)

A single-appearance voice terminal user on a 2-party call is also allowed to add the recipient of a VDN call to a 3-party conference. However the controlling party must execute the second button press (of the switchhook or the RECALL button) after the recipient of the VDN call has actually answered the call. If the controlling party executes the second button during vector processing, the soft held party is reconnected to the controlling party, and the conference attempt does not succeed.

Call Waiting

Call Waiting is denied when the called terminal is involved in a 3-party conference.

CMDR (Centralized Message Detail Recording)

The last terminal on a Conference—Three Party call is the number recorded in the calling number field by SMDR.

EUCD (Enhanced Uniform Call Distribution)

When an EUCD agent adds another agent to an EUCD call, the resulting conference is not a considered work-related activity for the second agent. The 106B status indicator shows the second agent as engaged in non-EUCD activity.

While an observer (using agent override) is connected to an EUCD agent's call, the Conference—Three Party feature is denied for use by the agent.

Hold

Used in conjunction with hard hold, the Conference—Three Party feature allows the calling voice terminal user to transfer a second call while holding the first call. After transferring the second call, the calling voice terminal user flashes the switchhook and dials the Call Hold access code to return to the call on hold.

IPA (Interpartition Access)

A voice terminal user (in a partition other than Extension Partition 0) is allowed to establish 3-party conferences that include participants that the user is otherwise allowed to call. If the user tries to add a conferee to the conference by dialing an extension number in another partition group, the switch returns intercept treatment to the user.

A voice terminal user in Extension Partition 0 is allowed to establish 3-party conferences with any voice terminal or over any trunk in the switch.

LWC (Leave Word Calling) in a DCS (Distributed Communications Service)

In a DCS environment without an Applications Processor and after a 3-party internode conference is established, the switch denies activation of Leave Word Calling.

Malicious Call Trace

When Malicious Call Trace is activated during a 3-party conference, the malicious caller's identity in the trace information becomes uncertain. The contents of Items 2 and 5 and of Items 3 and 6 in the controlling attendant's display can be reversed.

If there is one (and only one) party in the 3-party conference who is connected to the switch over an incoming trunk. The MCT software presumes that this party is the malicious caller. This party is identified as the malicious caller in Items 2 and 3 of the controlling attendant's display.

Sometimes, this ambiguity can be avoided with human intervention. Since the malicious caller usually initiates a malicious call, the originally called party can press the DROP button to disconnect the third party in the conference, verify that the malicious caller is still on the connection, and then quickly activate the trace. (However, when this is done, the third party cannot be readded to the conference.)

Music-on-Hold Access

Music is provided to the first call put on hold when establishing a Conference—Three Party call. When an established Conference—Three Party call has been put on hold and one of the parties goes on-hook, music is not given to the remaining party on hold.

Override

Override is denied when directed toward a line connected to a Conference—Three Party call, unless the line appears on a multiappearance terminal with more than one appearance. In this case, the override attempt routes to an idle appearance of the line, if any.

Precedence Calling

If a tie trunk being used on a 3-party conference is preempted by the Precedence Calling feature, all parties to the conference will hear preemption warning tone; the affected trunk will then be made idle, and the conference call will revert to an otherwise normal 2-party connection.

Priority Calling

When calling a single-appearance voice terminal in a conference created by the Conference—Three Party feature using the Priority Calling feature, the call is denied.

When the Priority Calling feature is activated toward a multiappearance terminal in a Three Party Conference, the call completes to an idle appearance. If no appearance is idle, the priority call is denied.

Recorded Telephone Dictation Access

The Conference—Three Party feature cannot be used in conjunction with the Recorded Telephone Dictation Access feature. Any attempt to access a recorded telephone dictation trunk from a 2-party connection is denied.

Remote Access

A Remote Access user can be a member of a 3-party conference but cannot establish the conference. To be a member of a 3-party conference, the remote access user first calls a local station user, and then that local station user must establish the conference by adding the third party.

Restriction—Miscellaneous Trunk Restrictions

A terminal restricted from accessing a trunk group due to the Miscellaneous Trunk Restrictions feature can be added to a conference, via Conference—Three Party, involving the restricted trunk group. However, the restricted terminal cannot originate a conference, via Conference—Three Party, involving the restricted trunk group.

Restrictions—Voice Terminal Restrictions

An Inward restricted terminal may be added to an established connection involving an incoming trunk via the Conference—Three Party feature.

An Outward restricted terminal can access a public network trunk if the restricted terminal calls an unrestricted terminal. From here the unrestricted terminal could use the Conference—Three Party feature to connect the restricted voice terminal to the public network.

An Origination restricted terminal may originate a call from a 2-party connection by first accessing the Conference—Three Party feature.

Serial Calls

For terminals without CONFERENCE or TRANSFER buttons, when Serial Calls is in effect, pressing the RECALL button at a local terminal or momentarily pressing the switchhook, recalls the attendant. Therefore, these terminal users cannot use the Conference—Three Party feature during a serial call.

SMDR (Station Message Detail Recording)

Same as CMDR (Centralized Message Detail Recording).

Tenant Services

A voice terminal user (in a partition other than Extension Partition 0) is allowed to establish 3-party conferences that include participants that the user is otherwise allowed to call. If the user tries to add a conferee to the conference by dialing an extension number in another partition, the switch returns intercept treatment to the user.

A voice terminal user in Extension Partition 0 is allowed to establish 3-party conferences with any voice terminal or over any trunk in the switch.

Timed Recall on Outgoing Calls

With timed recall, a trunk group is assigned a recall interval at which time a call using that trunk group is routed to the attendant. The attendant can then determine whether the call should be allowed to continue or should be terminated. This prevents users from tying up critical trunk facilities. A 3-party conference call could involve up to two such trunks. The first trunk to time-out receives recall treatment (i.e., times out and is routed to the attendant) even after the addition of a second trunk to the call. After the first timed recall, the trunk with the shorter recall time controls the recall treatment.

Trunk Verification—Attendant and Voice Terminal

Trunk Verification is denied when attempted toward a trunk connected to a Conference—Three Party call.

Unattended Console Service—Preselected Call Routing

When the Preselected Call Routing feature is in effect, the Conference—Three Party feature is automatically provided to the preselected voice terminal regardless of the voice terminal's line class of service. However, a single-appearance preselected voice terminal must have Conference—Three Party assigned to its line class of service to enable the user to direct incoming calls to trunks. All multiappearance voice terminals have Conference—Three Party capabilities.

Variable Format Call Detail Recording

The CDR records the last voice terminal connected to a 3-party conference call as the called number.

RESTRICTING FEATURE USE

While the basic voice terminal restrictions apply, they do not specifically restrict this feature. Outside the context of class of service, Miscellaneous Trunk Restrictions, and Attendant Control of Voice Terminals restrictions (already mentioned), this feature is not specifically restricted.

HARDWARE REQUIREMENTS

None.

FEATURE ADMINISTRATION

Assignment of the Conference—Three Party feature is on a per-line class-of-service basis for single-appearance terminals. Multiappearance terminals are always provided with the Conference—Three Party feature (not administrable). When required, the trunk-to-trunk transfer option is administered on a per-system basis.

This feature is administered using the MAAP (Maintenance and Administration Panel). The customer can administer this feature using the SMT (System Management Terminal) or the TCM (Terminal Change Management) feature. This feature can also be administered using CSM (Centralized System Management).

The following are the MAAP and SMT procedures used.

MAAP AND SMT PROCEDURES — CONFERENCE—THREE PARTY			
PROCEDURE	**WORD**	**PURPOSE**	**SMT**
000	1	Assigns the voice terminal class of service to an extension number.	Yes
010	1	Assigns the Conference—Three Party feature to a voice terminal class of service.	Yes
275	4	Assigns the trunk-to-trunk transfer to the system class of service.	Yes

The following are the applicable TCM path names used with the AP 16.

TCM SCREENS — CONFERENCE—THREE PARTY	
PATH NAME	**PURPOSE**
terminal-change class-of-service attributes	Assigns the Conference—Three Party feature to a voice terminal class of service.
terminal-change extensions attributes	Assigns the class of service to an extension number.

The following are the applicable CSM Command Paths utilizing the **admin** area of TCM or FM.

CSM SCREENS — MASKS CONFERENCE — THREE PARTY		
APPL'N	**OBJECT**	**PURPOSE**
TCM	extension	Assigns the voice terminal class of service to an extension number.
TCM	class-of-service	Assigns the Conference — Three Party feature to a voice terminal class of service.
TCM/FM	sys-cos	Assigns the trunk-to-trunk transfer to the system class of service.

DATA CALL SETUP

DESCRIPTION

Data Call Setup provides access to System 85 data services from most types of data endpoints. Data endpoints may be located on-premises or off-premises and may use either analog or digital interfaces. Standard data rates supported are:

- Low (300 bps and below)
- 300 bps
- 1200 bps
- 2400 bps
- 4800 bps
- 9600 bps
- 19.2 Kbps.

Other data rates can be supported for special applications such as ACCUNET Interface, DMI (Digital Multiplexed Interface), and ISDN (Integrated Services Digital Network). For these applications, data rates of 56 Kbps and 64 Kbps are available as required.

Call Setup Methods

Four basic methods are available with the System 85 for setting up data calls:

- Analog data call setup
- Digital Voice terminal dialing
- Keyboard dialing which includes:
  - Basic terminal dialing
  - Data hot line
  - Default terminal dialing
  - Mnemonic dialing.
- Host computer dialing.

Each of these methods is described in detail later in this section.

Data Call Connectivity

ON-PREMISES CONNECTIONS

On-premises data call setup connections can be either analog or digital. Either type of connection works satisfactorily. However, because the System 85 is a digital switch, certain advantages can be derived from the full digital connection option.

While on-premises data calls can be either analog or digital, they are generally expected to be compatible. That is, an on-premises data call starting at an analog station is expected to go to an analog station. A data call that starts on a digital station is expected to terminate on a digital station. The System 85 data features have enough flexibility to support these expectations. If, for some reason, it is necessary to convert on-premises data calls between analog and digital formats, ‘‘conversion resources’’ must be provided. These conversion resources are special hardware configurations not feature supported. The Modem Pooling feature does not support on-premises data call setup.

OFF-PREMISES CONNECTIONS

The Data Call Setup feature can also be used for off-premises data calls to or from System 85 data end points. Off-premises data connections are made using trunks or off-premises terminal lines. Several different arrangements are available for off-premises data call setup, and the System 85 offers several features that support these arrangements. Different arrangements available include:

- Calling from the analog public network via DID (Direct Inward Dialing)
- Calling over an analog private network connection
- Calling from a digital public network service (ACCUNET Service or ISDN/PRI)
- Calling over a digital private network (using the DS1 Interface feature or the ISDN/PRI feature)
- Calling to or from an Off-Premises Data Only station.

Like on-premises data calls, off-premises data calls can use either analog or digital interfaces. However, with off-premises connections, there is no assumption of uniformity. That is, it is assumed that incoming analog calls will attempt to reach digital interfaced end points, and that digital interfaced stations on the switch will need to place outgoing calls over analog trunks. The Modem Pooling feature is provided to handle these requirements. Modem Pooling supports off-premises data calls (both incoming and outgoing). Modem Pooling is described in detail separately in this manual.

Terminal Equipment Used

The following System 85 terminal equipment configurations can be used for data call setup:

ANALOG VOICE TERMINAL CONFIGURATIONS

- A single-line analog voice terminal equipped with the Transfer feature

  These terminals can provide dial access to data services for data terminals. The data terminal may or may not be associated with the voice terminal. This arrangement is most likely to be used by the attendant who has a voice terminal located next to the attendant console. Restricted data users can be routed to the attendant for call completion. But, attendant-extended calls (via the console) are not provided with Data Protection or Modem Pooling support. The adjacent voice terminal can be used to extend the call with Data Protection active and to obtain Modem Pooling support when required.

- A single-line analog voice terminal equipped with a modem

  This arrangement is the traditional dedicated voice terminal. This is the same configuration that is typically used with analog switches. A voice terminal and modem is dedicated to the data terminal for data calling. The voice terminal can be used for voice calling when the data terminal is not in use. However, this arrangement does not support simultaneous voice and data service.

DIGITAL VOICE TERMINAL CONFIGURATIONS

- A digital voice terminal (e.g., 7404D, 7405D, etc.), a data module, and an assigned EIA data terminal (e.g., 513 BCT [Business Communications Terminal])

  These digital voice terminals can be assigned one or more voice and data extensions and be equipped with DATA buttons. The DATA buttons are used to transfer a data call from the voice extension to a specific data extension. The DATA button also provides enhanced features used with data calling. The data terminal can be administered to perform dialing from the keyboard, if desired. The Transfer feature can be used if a DATA button is not provided.

DATA TERMINAL ONLY CONFIGURATION

- A data terminal without an associated voice terminal

  A data terminal can use a PDM (Processor Data Module) to interface to the switch without having an assigned voice terminal. With this configuration, data calls are set up using the Transfer feature, One Button Transfer, or Keyboard Dialing (including Default Dialing) from the data terminal itself.

PERSONAL COMPUTER CONFIGURATIONS

- A digital voice terminal (e.g., 7404D or 7405D) configured to support the PC/PBX Connection feature.

  This arrangement allows a compatible PC (Personal Computer), such as the AT&T PC6300, to connect to the System 85 switch using a DCP interface. The DCP interface permits the PC to take advantage of the data communications features of the System 85 switch. The PC/PBX Connection feature and its associated configurations are described in detail in its own section of this manual.

INTEGRATED VOICE/DATA STATION CONFIGURATIONS

- An integrated voice/data station (i.e., AT&T Personal Terminal 510D and 515 BCT)

  These data terminals are equipped with an integral voice terminal and data module for data call setup operations. Dialing can be performed using the terminal keyboard or from the voice extension.

HYBRID VOICE TERMINAL CONFIGURATIONS

- A hybrid voice terminal (e.g., 7205H) with an associated data module and EIA data terminal

  This terminal can be assigned a voice extension and data extension(s) and be equipped with DATA buttons. The DATA button is used to transfer a data call from the voice extension to a specific data extension. The voice extension is used to dial the data service extension or access code. The hybrid voice terminal's DATA button also provides enhanced features used specifically with data calls (see *Data Button Functions*). The Transfer feature can be used if a DATA button is not provided.

  NOTE: The 7405H Hybrid Voice Terminal was Manufacture Discontinued after January, 1987, and is available only while supplies last.

3270 SYSTEM CONFIGURATIONS

- IBM* 3270 System Terminals and Cluster Controllers

  IBM 3270 System equipment can be used with the System 85. For this configuration, special 3270 Series Data Modules perform conversion and necessary buffering. This configuration provides digital connections between terminals and the host computer for 3270 type equipment, without a need for coaxial cabling (uses standard building wiring). With this configuration, the cluster controller views the switch ports as terminals. This arrangement is shown in Figure 38-1.

---

* Registered trademark of IBM Corporation.

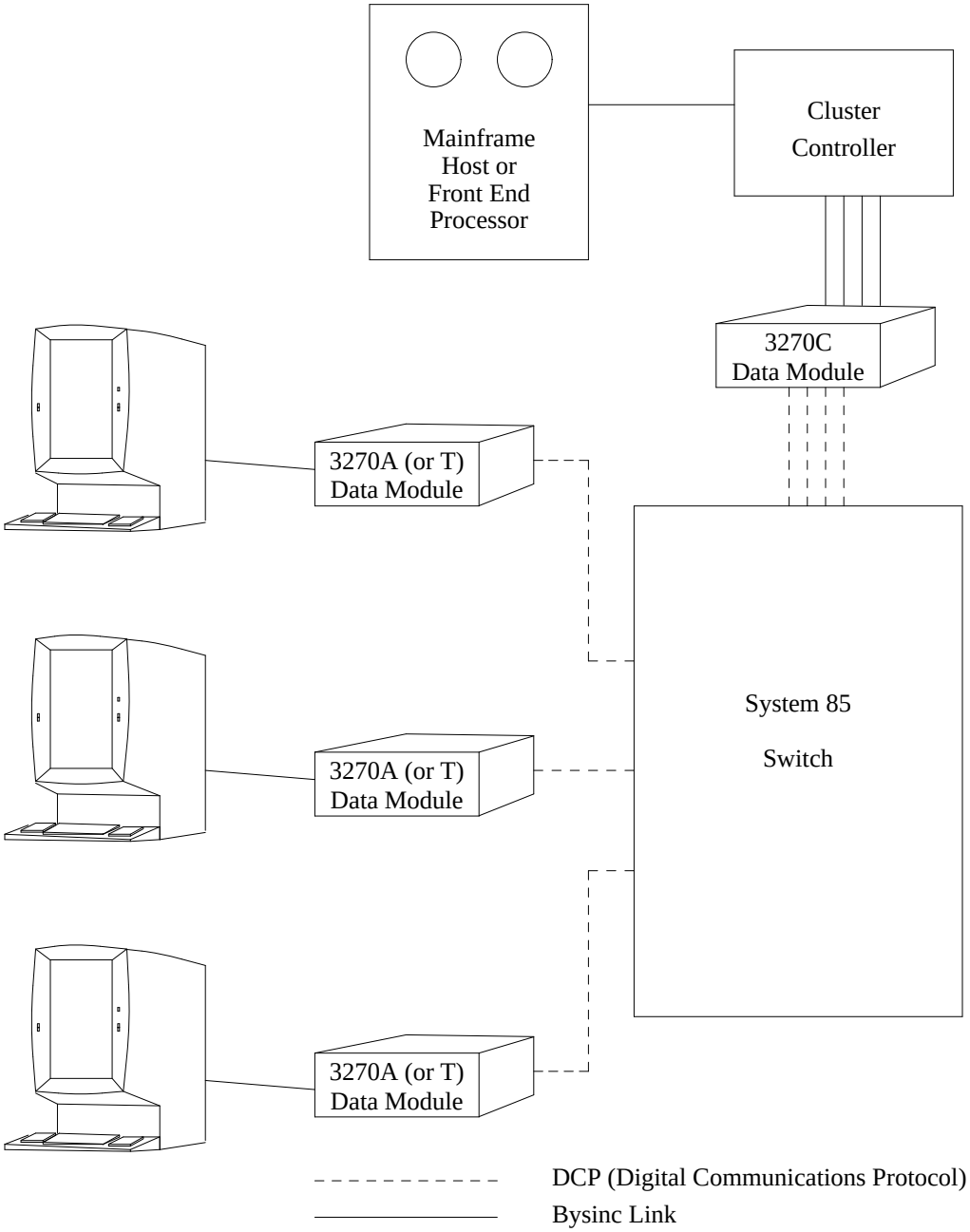

Figure 38-1. 3270 Equipment Configuration

Analog Data Call Setup

Analog connections require the use of a dedicated modem (modulator demodulator). This is the traditional arrangement that is commonly associated with analog switches. The modem converts digital (EIA) signals from a terminal or other digital device to an analog signal. This analog signal is usually a *frequency shift keyed* format that uses a (relatively) high frequency analog signal for a bit and a low frequency analog signal to represent a no bit. The specific analog format used is generally switch independent, and is relevant only to the modems at either end of the analog connection (this is the general case; there are [as always] exceptions).

Analog data calls work well at low data rates, however, because they are carried over voice band circuits and the band widths used for standard voice range frequencies is narrow, this technique is limited in the data rates it can support. Most modems support data rates of 1200 bps or less. Some modems are available that can support data rates of up to 4800 bps, however, these modems are generally more expensive. Figure 38-2 shows the basic analog arrangements available with the System 85 switch.

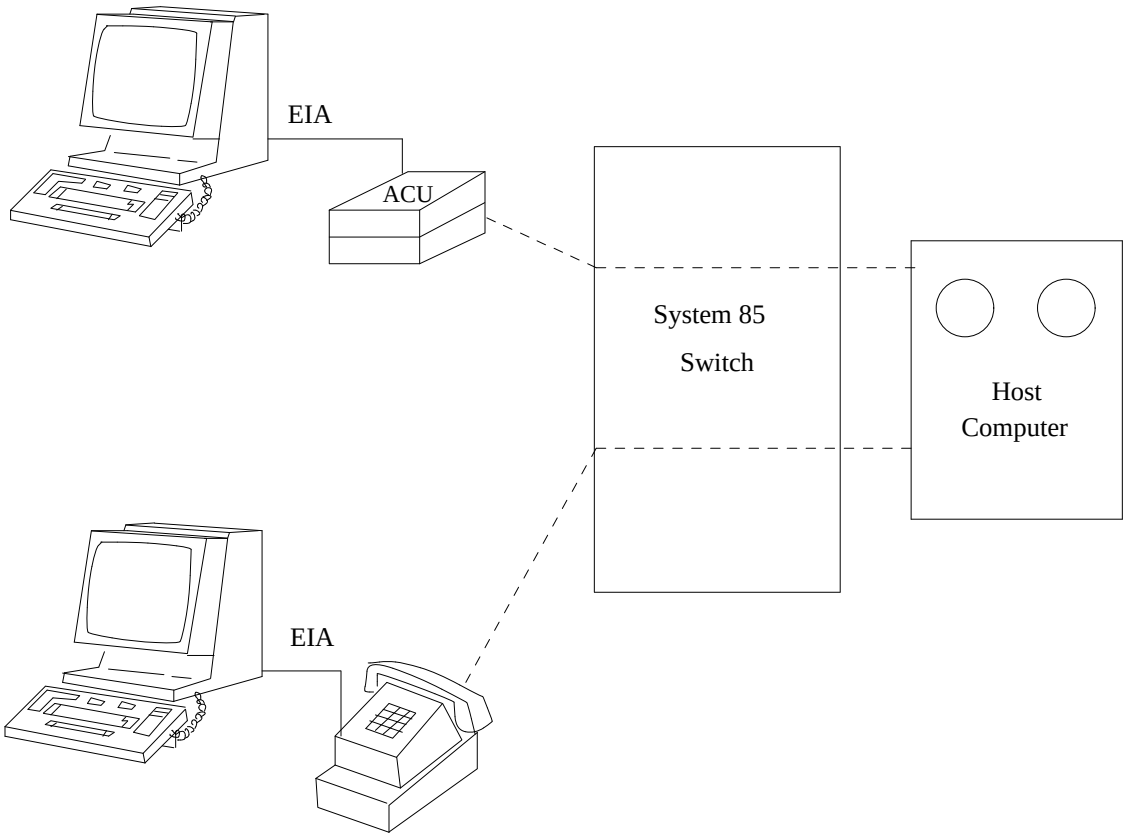

Figure 38-2. Data Call Setup Analog Arrangements

ANALOG CALL SETUP METHODS

Analog data call setup uses either an analog voice terminal and an associated modem or an ACU (Automatic Calling Unit). With either method, the dialing instrument is assigned to the modem and cannot be used separately while a data call is in progress. For example, with an analog voice terminal the user dials the number for the desired data port and listens to the call-progress tones. When the modem at the data port returns *ready tone*, the user presses a data button that transfers control of the local end of the call to the modem. The telephone used to setup the data call cannot now be used to setup or receive any other calls as long as the data call is in progress (no dial tone locally and any incoming calls receive busy tone).

With analog interfaces at both ends of the connection, two alternatives are available for connecting the host computer. One is to use a line appearance and modem set up like an analog interfaced terminal, as shown in figure 38-2. The other is to use the DCA (Data Communications Access) feature. The DCA feature also uses modems, however, it uses trunk appearances rather than line appearances. The DCA feature is described in detail in its own section of this manual.

Digital Data Call Setup

DCP (DIGITAL COMMUNICATIONS PROTOCOL) AND DATA MODULES

Digital data connections on the System 85 use a data module in place of a modem. Data modules convert the EIA signals from data terminals and other digital devices to the System 85's internal digital protocol DCP (Digital Communications Protocol). DCP uses standard building wiring (4-wire metallic conductor) to provide two communications channels and a signaling channel. Using DCP, one connection can support both a digital data terminal and a digital voice terminal and also provide signaling services for other features such as the Display — Voice Terminal feature. Figure 38-3 shows some typical on-premises digital data call setup connections.

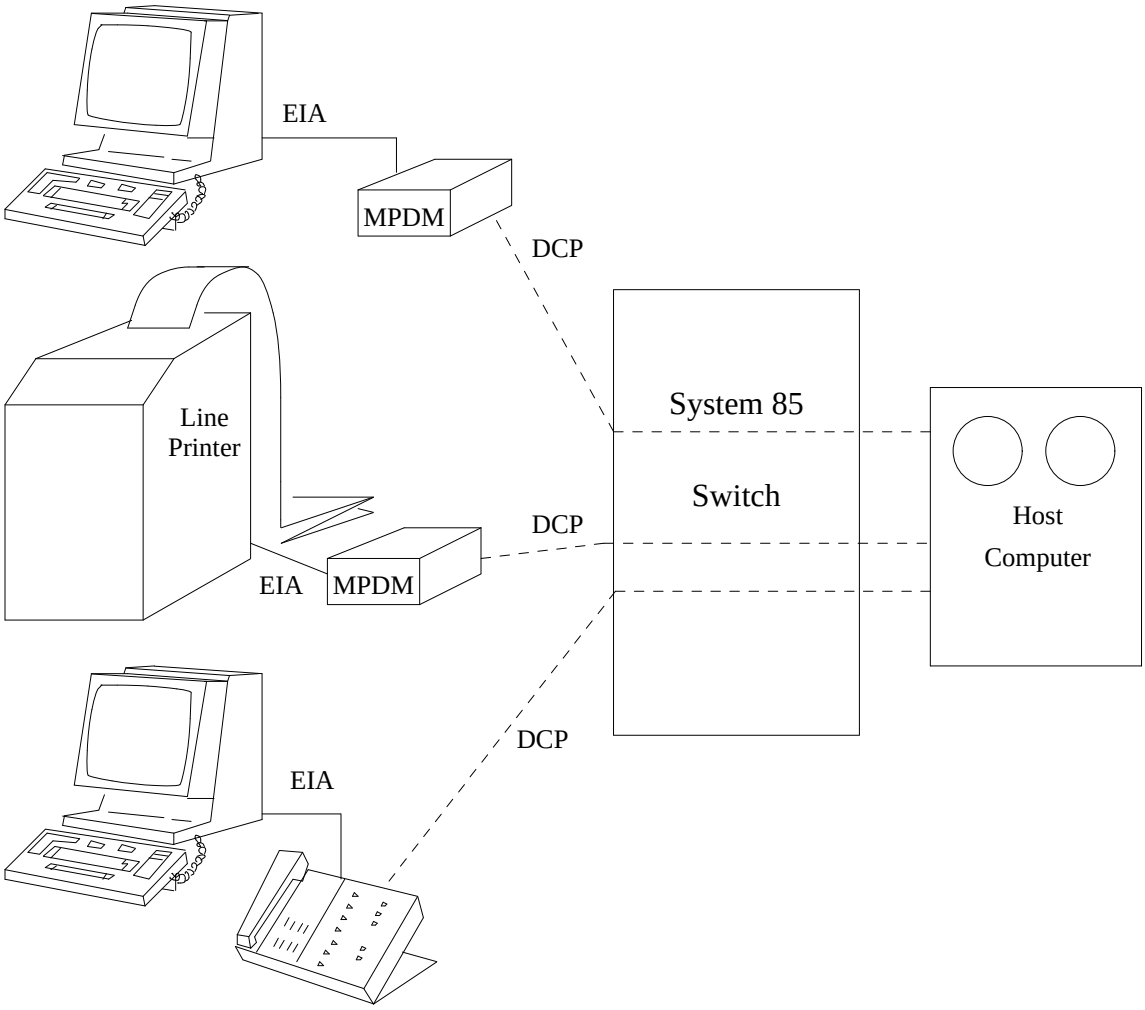

Figure 38-3. Data Call Setup Digital Arrangements

Digital Voice Terminal Dialing

With a digital voice terminal and an associated data module, the voice terminal is used in much the same way as for analog call setup. The principle difference is that once the data call is passed to the data terminal, the digital voice terminal is returned to useful service and can be used to setup additional data calls or establish and receive voice calls.

There are two methods of establishing a digital data call with a voice terminal.

- Voice terminal users that do not have a DATA button can use the Transfer feature.
- Voice terminal users with a DATA button use the DATA button to set up calls for the assigned data endpoint(s). They can also use the Transfer feature to access other data endpoints.

USING THE TRANSFER FEATURE

Voice terminal dialing and the Transfer feature can be used to originate a data call for another user or a data end point without an associated voice terminal. The call can be originated by the transferring user or by one of the data end points to be connected. The transferring user uses the same steps that would be used to transfer a voice call. The call can be between two on-premises data end points or between a local (on-premises) data end point and a remote (off-premises) data end point.

USING AN ASSIGNED DATA BUTTON

Voice terminals with a DATA button can establish a data call for the associated data terminal by simply dialing the data extension or access code from the voice terminal and pressing the DATA button when the called data endpoint responds. A login prompt appears on the data terminal's CRT.

The Data Button

Any administrable feature button on a 7400D (Digital) series voice terminal can be assigned as a DATA button. The DATA button controls the following data communications functions for the associated data end point.

- Data preindication
- One button transfer
- Return-to-voice.

Multiple DATA buttons can be assigned to a single voice terminal. This voice terminal can then set up data calls for all of the associated data terminals. This can be useful for operations such as centralized data entry points or FAX centers. Also, a single data endpoint can be associate with DATA buttons on several different voice terminals.

DATA BUTTON FUNCTIONS

Data Preindication

Data preindication notifies the switch that a data call is being set up. This allows the switch to reserve the associated data module, and if needed, a Modem Pooling conversion resource before the outgoing data call is dialed. If the conversion resource is not available, the call is denied before completion and prevents toll charges from being incurred. If data preindication is not used, the call is completed to the remote data endpoint, and toll charges are assessed. Without a conversion resource, the data call may fail when the switch attempts to transfer the connection to a data endpoint.

Preindication is important in a DCS (Distributed Communications System). With a DCS, it is not always apparent to the user when a conversion resource is needed. The dialed data endpoint may or may not be located on-premises, and trunk facilities used for calls between nodes may or may not be capable of supporting end-to-end digital connections. By preindicating the call, a conversion resource is reserved in case it is needed. If not needed, the conversion resource is released by the switch. With Keyboard Dialing (discussed later), preindication is automatic.

One Button Transfer

One button transfer is the basic procedure for establishing the data connection. It allows the user to transfer a call to the associated data module simply by pressing the DATA button.

Return-to-Voice

Return-to-voice is a procedure that can be used to terminate a data call. By going off-hook on the voice extension and pressing the DATA button, the data call is transferred back to the voice extension. The user then has three options:

a. Tear down the data connection by going on-hook.

b. Establish a new data connection to a different data endpoint by pressing a different DATA button.

c. Establish a new data connection to a different data endpoint using the Transfer feature.

Keyboard Dialing

Keyboard Dialing allows a user to set up and break down data calls directly from the data terminal. This includes the ability to send on-hook/off-hook signals to the switch and to dial extension numbers. Data Preindication is automatically provided when Keyboard Dialing is used to setup a data call. The user can place on- and off-premises public and private network calls where such connections are available.

Terminal Requirements

Keyboard Dialing requires the use of terminals that provide ASCII (American Standard Code for Information Interchange), 10-bit start/stop signaling. Data rates from 110 bps to 64 Kbps can be used. When Modem Pooling is involved, the data rates available are determined by the Modem Pooling conversion resource. Calls are originated by pressing the BREAK key on the keyboard or the ORIGINATE/DISCONNECT button on the associated data module.

System Messages

Standard system messages are displayed on the data terminal CRT. These messages tell the user the call's state and expected responses (see *CALL PROGRESS MONITORING AND CONTROL*). The user may need to respond to multiple requests for dialing (i.e., with the ISN Interface feature or when an access or authorization code is used to restrict access to a trunk facility or data endpoint).

In Process Corrections

While entering digits, errors can be corrected using editing functions. Users wishing to transmit at extra low speeds (e.g., 110 bps) must dial at 300 bps or more and then switch to the low speed when dialing has been completed. If a printer is involved in the data call setup, it prints everything that appears on the CRT.

Modem Pool Identification

When keyboard dialing is used, one of the call progress messages gives the user information that can be used to identify the Modem Pooling conversion resource that has been reserved for the call. This is the ''RINGING XXX XXX'' message. The two numbers (XXX XXX) are the trunk group number and the trunk number within that group, of the digital member of the conversion resource assigned to the call. These numbers are used to obtain the dial access code used with the Trunk Verification—Voice Terminal feature to check trunk and conversion resource condition (see the Trunk Verification—Voice Terminal feature for these procedures).

Queue Position Feedback

If the data call is placed in a queue, the call's place in queue is displayed on the CRT, and this display can be updated as the queue is served. The display is updated by typing ''q'' followed by a carriage return.

RECEIVING CALLS

The data terminal can also be used to answer incoming data calls. The message INCOMING CALL is displayed on the CRT. When a DTDM is used, the call is answered automatically. For MPDMs and MTDMs, auto-answer is an administrable option.

CALL PROGRESS MONITORING AND CONTROL

Call progress monitoring and control is an essential element to data terminal dialing. This attribute provides the data terminal user with the ability to receive and respond to call progress messages while a call is being placed. Call Progress Monitoring and Control is essential when placing a call that requires responses to switch signals, such as network or remote access calls or while on a call that has been placed in a queue.

Call progress monitoring and control permits the user to respond to access code or authorization code requests. The system generates these requests when needed circuits are under access control. This also permits the data terminal dialing user to enter feature access codes and respond to second dial tone states. Table 38-A lists some of the messages provided to the terminal dialing user.

A Keyboard Dialing string can contain up to 31 characters (i.e., in response to the system messages). Cosmetic characters such as spaces, dashes, and parentheses are permitted. Special control characters, such as the dial tone delimiter ‘‘+’’ and pause ‘‘%,’’ are available to facilitate Keyboard Dialing through networks and multiple switching nodes.

Table 38-1. Message Set for Data Call Setup Terminal Dialing

MESSAGE FORMAT	APPLICATION	MEANING
DIAL:	Placing Call	Enter extension number or feature dial access code.
TRY AGAIN	Placing Call	Reorder tone is returned.
BUSY	Placing Call	Busy tone is returned.
DENIED	Placing Call	Intercept tone is returned.
DENIED TRY AGAIN	Placing Call	Busy tone is returned.
CONFIRMED	Activating a feature	Confirmation tone returned.
RINGING XXX XXX	Placing Call	Ringing tone is returned. The numbers (XXX XXX) show the trunk group and trunk numbers of the Modem Pooling conversion resource.
CALLBACK	Receiving a callback call	A previously placed Auto Callback call is ringing.
ABANDONED	Receiving a call	The calling party has gone on-hook.
PLEASE ANS-	Receiving a call	Equivalent to ringing, or 1-button transfer is in use.
FORWARDED	Call Forwarding	A call to the terminal has been forwarded.
DISCONNECTED-TRANSFER	Return to Voice	A call has been terminated using Return to Voice.
INCOMING CALL-	Receiving an incoming call	Equivalent to ringing.
DISCONNECTED-OTHER END	Call termination	A call has been terminated; other terminal has gone on-hook.
ANSWERED	Placing Call	Called terminal has gone off-hook.
CHECK OPTIONS	Placing Call	Handshaking has failed between data modules.
LIST:	Abbreviated Dialing	Request for list number to be programmed.
INDEX:	Abbreviated Dialing	Request for list index number to be programmed.
ENTRY:	Abbreviated Dialing	Request for digit string.
STORED	Abbreviated Dialing	Confirmation: number has been entered into list.
WAIT,	Placing Call	Call setup delay.
WAIT, ## IN QUEUE	Placing Call	Call position in queue.
PROCEEDING	Placing Call	Call in queue is being served.
CODE:	Placing Call	Recall dial tone received. Authorization code requested.

The form of these messages may vary depending on the method and terminal used. For example, with the AT&T 5620 terminal, if the BRK key is used to start dialing or end a call, the messages displayed are ‘‘**D**’’ rather than ‘‘**DIAL:**’’ or ‘‘**DISCONNECTED:**.’’

FORMS OF KEYBOARD DIALING

Three forms of keyboard dialing are available. These are basic keyboard dialing, default keyboard dialing, and mnemonic dialing.

Basic Keyboard Dialing

Basic keyboard dialing can be used on any switch that allows keyboard dialing. With basic keyboard dialing, the user simply enters the dialing string (numeric and special characters) on the data terminal keyboard. Entries are in response to prompt messages that appear on the data terminal screen.

Default Terminal Dialing

Default terminal dialing places a data call to a predesignated data end point by simply entering a ‘‘null’’ character. For the purposes of default terminal dialing, a null character is a space followed by a carriage return, or simply a carriage return in response to the dial prompt. For a given data module, the default destination address is administered on the switch.

- Procedure 059, Word 1 and 2, for Release 2, Version 3
- Procedure 059, Word 4, for Release 2, Version 4.

The maximum length of a default dialing number is 20 characters. When default dialing is used, the switch retrieves this number and uses it to place the call. Default terminal dialing is especially useful when a clear majority of calls placed from a given terminal are placed to a single data end point (i.e., an assigned host computer).

Data Hot Line Service

A data module, associated with a data terminal, and administered for *default dialing*, can be assigned as a Hot Line station on Version 4 switches. This is done using Procedure 000, Word 3. Once assigned as a data Hot Line, the user simply presses the BREAK key or the Originate/Disconnect button on the data module and the default number is automatically dialed by the switch.

Mnemonic Dialing

Mnemonic dialing is a form of keyboard dialing that allows the user to enter an *alphanumeric string* rather than a strict numeric to place a data call.

The principle advantage to mnemonic dialing is that for most users, names are easier to remember than numbers. For example, a user who frequently accesses several different host computers can use the name of each host as a mnemonic dialing entry rather than having to remember and associate separate numbers with each host name. Mnemonic dialing can be used to access local extensions, data terminals on remote private network nodes, or data terminals on the public network (including ISDN).

Mnemonic dialing is much like Abbreviated Dialing with the system list. There is one mnemonic dialing list that is maintained by the switch administrator and is available on a system-wide basis. A maximum of 1000 mnemonic dialing ‘‘names’’ can be stored on the mnemonic dialing list (300 in Release 2, Version 3). Mnemonic dialing names and their associated numbers must conform to the following:

- A mnemonic dialing entry can be up to ten characters in length.
- The first character must be an alpha character (letter).
- A distinction is made between cases (upper and lower) for alpha characters. That is, ‘‘george’’ and ‘‘George’’ are treated by the switch as two separate and distinct mnemonic names.
- Each mnemonic entry represents a number that can be up to 20 characters in length.
- Numbers associated with mnemonic dialing names can contain the same special function characters used with Abbreviated Dialing, except for the Suppress Character. The suppress function is not needed with keyboard dialing. The following special functions are available:
  - Pause
  - Wait
  - Mark
  - Wait for dial tone
  - Manual digit entry (a specified number of digits, up to 15).

Host Computer Connectivity

As with data terminals, several methods can be used to connect host computers to the System 85. These include analog connections, digital end-to-end arrangements, and a combination of analog and digital interfaces. Each host computer interface feature is discussed in detail in its own section of this manual. They are briefly discussed here for continuity purposes.

Analog Host Computer Interface Features

Host computer interface ports can be administered as individual line appearances. These can be provided with modems or ACUs (Automatic Calling Units) depending on their intended use. When this is done, each port is view by the switch as a separate data terminal. Calls to or from these ports work exactly like calls to or from a data terminal.

The System 85 offers one analog computer interface feature that is specifically designed for use with a host computer. That is the Data Communications Access feature.

Digital Host Computer Interface Features

Specific digital host computer interface features available on the System 85 include the following:

- Host Computer Access feature
- DMI† (Digital Multiplexed Interface) feature
  - — BOS (Bit Oriented Signaling)
  - — MOS (Message Oriented Signaling).

Each of these host interface features is described in detail in its own section of this manual.

Analog and Digital Interfaces on the Same System

The same System 85 switch can support both analog and digital interfaced data end points at the same time. Separate and distinct analog data systems and digital systems can be supported. However, the two systems are not directly compatible with one another. Figure 38-4 shows a System 85 setup to support both analog and digital data calling at the same time.

The arrangement in Figure 38-4 shows both an analog interfaced host computer and a digital interfaced host computer (two separate hosts).

Dual Interfaced Host Computer

It is also possible for a single host computer to use both analog and digital interface arrangements at the same time. This is represented in Figure 38-4 by the dotted box.

OTHER ANALOG TO DIGITAL CONNECTIONS

It is possible for analog and digital interfaced end points to communicate with each other in the System 85 environment. Figures 38-5 and 38-6 show this being done with off-premises connections. The Modem Pooling feature of the System 85 makes this connectivity possible.

Modem Pooling: The Modem Pooling feature provides the ability for analog interfaced and digital interfaced facilities to both be used effectively on the same switch. In simple terms, the Modem Pooling feature provides the System 85 switch with the ability to automatically insert a *conversion resource* into a connection when needed. The conversion resource converts data signals between analog and digital data signal formats.

It is important to note that the Modem Pooling feature is associated with off-premises data calling. That is, it supports calls from local stations to remote data end points or from remote stations to local data end points. It does not support calls between local analog interfaced facilities and local digital interfaced

† The DMI feature was originally available in only one version. The DMI BOS and DMI MOS are System 85, Release 2, Version 4, enhancements of the DMI feature. Both BOS and MOS differ from the original version which used the DS1 AVD format.

facilities. In order for this type of call to be supported, one end of the connection must appear to the switch to be a remote facility. This could be achieved by the initiating station placing a call to the local CO (Central Office) and then coming back into the System 85 switch via a separate DID CO trunk or a remote access trunk. As with the other supporting data features, the Modem Pooling feature is described in detail in its own section of this manual.

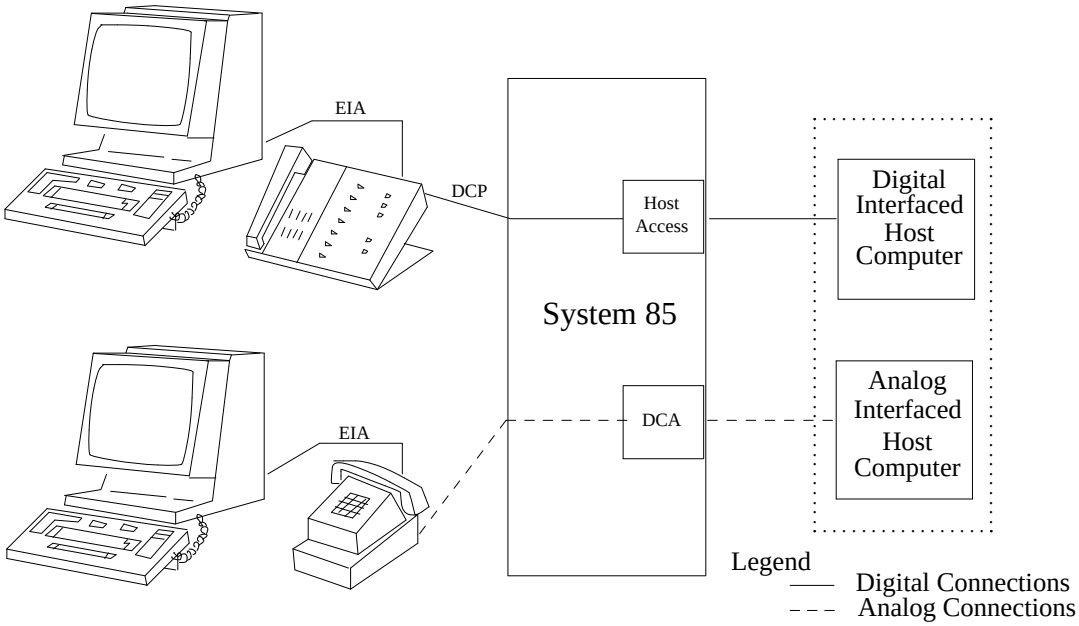

Figure 38-4. Data Call Setup With Dual Interface Arrangements

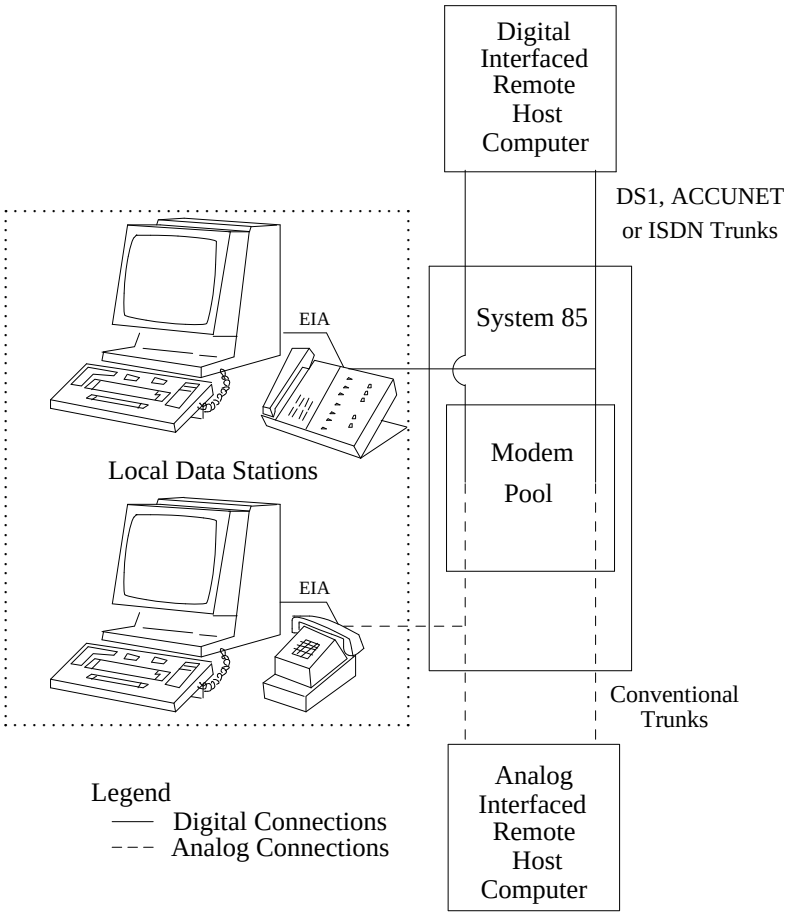

Figure 38-5. Off-Premises Data Calls From Local Stations to Remote Hosts

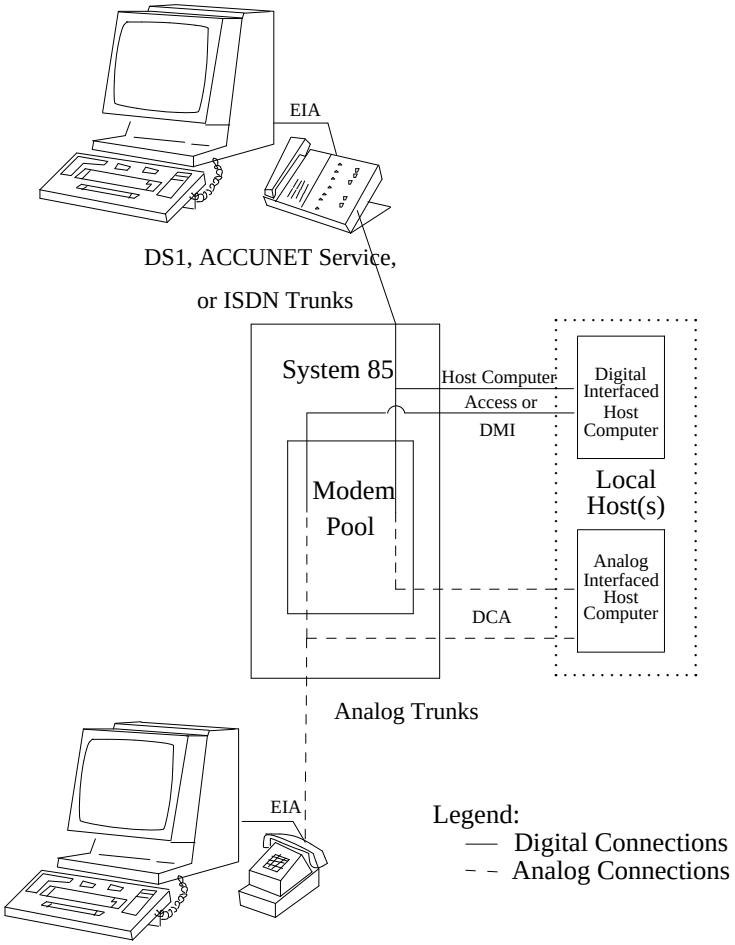

Figure 38-6. Off-Premises Data Calls From Remote Stations to Local Hosts

Host Computer Dialing

It is possible for host computers to dial data endpoints. Remote computers must be provided with the proper equipment to access a local host computer. Local hosts, interfaced to the System 85 through EIA ports can use an automatic calling unit and modem to dial other data end points. Hosts interfaced to System 85 via MPDMs and MTDMs can originate data calls when the data modules are equipped with the terminal dialing option. This option allows the data module to recognize dialing messages. The off-hook/on-hook and dialing instructions are generated from software provided by the customer. Detailed information on this (host computer dialing) option is given in Appendix D.

Feature History and Development

- The Data Call Setup feature was first available on System 85 in Release 1.
- The Mnemonic Dialing capability was added in Release 2, Version 3.
- The Default Terminal Dialing capability was added in Release 2, Version 3.
- The Mnemonic Dialing capability was enhanced to provide up to 1000 mnemonic names in Release 2, Version 4 (from 300 in Release 2, Version 3).

USER OPERATIONS

The following are the basic user operations for the Data Call Setup feature:

Analog Voice Terminals:

User operations for analog interfaced data terminals with voice terminal data call setup may vary depending on the type of modem used. The following procedures are based on use of the DATAPHONE* Modem 300/1200.

- Go off-hook on the associated voice terminal. (Dial tone)
- Dial the access code or extension number for the desired data end point. (Call-progress tones, i.e., ringing tone)
- When ready tone is returned, press the DATA key on the voice terminal to transfer control of the call to the data terminal (login prompt appears on the data terminal CRT).

Digital Voice Terminals

To place a call using the DATA button:

- Go off-hook on the associated voice terminal. (Dial tone)
- Dial the access code or extension number for the desired data end point. (Call-progress tones, i.e., ringing tone)
- Press the DATA button for the data terminal to be used. (Call progress messages, i.e., RINGING, ANSWERED, etc., appear on the data terminal CRT unless ready tone is received before the DATA button is pressed. When ready tone is received, a login prompt appears on the CRT.)

---

* Registered trademark of AT&T.

To place a call using the Transfer feature:

- Go off hook on the voice terminal (Dial tone).
- Dial the access code or extension number for the desired data end point. (Call-progress tones, i.e., ringing tone).
- When ready tone is received, press the Transfer button. (Appearance lamp flashes.)
- Dial the other data end point to be connected. (Call-progress tones, i.e., ringing tone.)
- Press the Transfer button again. (Connection with ringing tone is transferred to the originally dialed data terminal. Call progress messages appear on the data terminals CRT unless ready tone is received before the Transfer button is pressed. When ready tone is received, a login prompt appears on the CRT.)

For an incoming (off-premises) call, the data user and the assisting user should be connected via a normal voice call. To transfer the data user to a data endpoint, the assisting user puts the data user on soft hold and dials the data access code. When the assisting user receives ringback tone, they transfer the call with ringing tone to the data user by going on-hook. The data user then waits for a response from the data endpoint and performs the appropriate actions that will establish a connection.

To terminate a call setup using the DATA button:

- Go off-hook on the associated voice terminal. (Dial tone.)
- Press the DATA button associated with the data call to be terminated. (Control of the connection is transferred to the voice terminal appearance. Ready tone is heard on the voice terminal, and the message DISCONNECTED-TRANSFER appears on the data terminal CRT.)

Keyboard Dialing

BASIC TERMINAL DIALING

To place a call using basic keyboard dialing:

- Press the Originate/Disconnect button on the assigned data module,

  or

- Press the DISCONNECT BREAK key on the data terminal keyboard. (The message **DIAL:** appears on the CRT.)
- Enter the dialing string for the desired data end point on the keyboard. (Dialing string can be a dial access code, extension number, or abbreviated dialing entry.)
- Press the carriage return key. (Call progress messages, i.e., **RINGING, ANSWERED,** and a login prompt appear on the CRT.)

To answer an incoming call:

NOTE: The data terminal must be on and in an idle (disconnected) state. Otherwise, the call must be answered manually. This is done by pressing the keyboard BREAK key or the data module ORIGINATE/DISCONNECT button. The terminal bell then rings to alert the user of the incoming call.

- Press the BREAK key (BREAK key must be held down for 2 or more seconds) if long-space disconnect is active,

  or

- Press the ORIGINATE/DISCONNECT button on the data module.

To place a call using Default Terminals Dialing:

- Press the **Originate/Disconnect** button on the data module,

  or

- Press the **BREAK** key on the terminal keyboard. (System returns **DIAL:** prompt.)
- Press the **RETURN** key or space bar followed by **RETURN** key (call progress messages and login prompt as appropriate).

To place a call using Mnemonic Dialing:

- Press the **Originate/Disconnect** button on the data module,

  or

- Press the **BREAK** key on the terminal keyboard. (System returns **DIAL:** prompt.)
- Enter the mnemonic string for the destination desired.
- Press **RETURN** key (call progress messages and login prompt as appropriate).

Host Computer Dialing

Host computer dialing can use any of the keyboard dialing processes. This method of data call setup is loaded into the host computer software and is subsequently not apparent to the user.

Specific software steps are dependent on the host computer being used. Detailed information needed to set up a Host Computer Dialing Program is contained in **APPENDIX D: DIGITAL COMMUNICATIONS**.

CONSIDERATIONS

Hard and Soft Processor Swaps

The contents of the mnemonic dialing list are stored in a translation portion of switch memory. Therefore, this list will endure a hard processor swap.

Each data terminal's default dialing number is stored in a translation portion of switch memory. Therefore, these numbers will endure a hard processor swap.

Stable calls placed using the Data Call Setup feature will endure a hard swap. However, Data Call Setup cannot be used to place a call during a hard swap.

The Data Call Setup feature operates normally during a soft processor swap.

INTERACTIONS WITH OTHER FEATURES

Abbreviated Dialing

Using keyboard dialing, Abbreviated Dialing can be used to originate data calls. In switches prior to Release 2, Version 4, Abbreviated Dialing lists were assigned based on extension numbers. So, data terminals could have their own Abbreviated Dialing lists. In Release 2, Version 4, Abbreviated Dialing lists are assigned based on equipment locations. So, data terminals must share the Abbreviated Dialing lists of their associated voice terminals.

ACCUNET Service Interface

The Voice Terminal Dialing portion of the Data Call Setup feature procedures is used to access the ACCUNET Service network. Keyboard dialing, as described in the Data Call Setup feature, will not work for ACCUNET Service calls.

AAR (Automatic Alternate Routing)

The AAR feature can be used to improve the routing of data calls just as it is for voice calls. Separate routing patterns are required, however, to prevent voice calls from terminating on data extensions and vice versa.

Automatic Callback

Automatic Callback can be used by both voice terminal and data terminal users. However, an Automatic Callback call to a data terminal must be answered using the manual answering procedure.

ARS (Automatic Route Selection)

The ARS feature can be used to improve the routing of data calls as well as voice calls. However, as with the AAR feature, separate routing patterns must be used to prevent voice calls from terminating on data only extensions and vice versa.

Call Coverage

Call Coverage is blocked for a data module. That is, if a data module is placed in a coverage path, it will be skipped in the search for an available coverage point. If a data module calls an extension that has Call Coverage active, the call does not cover. Rather, it stays at the terminal called.

Call Forwarding—Busy and Don't Answer

This feature can be used by voice terminal and data terminal users. It is recommended in lieu of Call Coverage.

Call Pickup

While a data terminal (or more precisely, its extension number) can be made a member of a call pickup group, Call Pickup is blocked for data terminals. They cannot be used to pickup a call, nor can a call directed to a data terminal be picked up by another member of the pickup group.

Data Protection

Data Protection should be used for all data calls to prevent disruption by bridging and override features. Data endpoints that are used for data communications exclusively can be assigned Data Protection—Permanent.

DID (Direct Inward Dialing)

On-premises host computers can be accessed from off-premises terminals using DID facilities in the same way a DID voice call is placed. By dialing the extension number assigned for accessing the host computer (this may be via extension number steering). The switch decides if a conversion resource is required and inserts the resource into the path of the data call (see Modem Pooling).

DCS (Distributed Communications System)

In a DCS environment, the Transfer feature should not be used to set up data calls unless all tie trunks involved are DS1 AVD (Alternate Voice Data). Data calls between data endpoints on separate nodes of a DCS arrangement require a modem pooling conversion resource unless DS1 AVD tie trunks are used. A call transferred between nodes using the Transfer feature does not receive a Modem Pooling conversion resource.

In the DCS environment, it is possible (perhaps even likely) that a caller will not know what switching node supports a particular data endpoint. The only way to assure that the call will be allowed is to use preindication and 1-button transfer or data terminal dialing where preindication is automatic.

For local (on-premises) calls, data rates up to 64 Kbps are supported. On internode calls not using DS1 AVD tie trunks, a Modem Pooling conversion resource is needed. In this case, the data rates are limited by the modems available at both switches. Generally, modems are limited to a maximum data rate of 4800 bps with 300 to 1200 bps being the most common (and economical).

Hot Line

Default Dialing

The default dialing capability of the Data Call Setup feature is used to perform the dialing function for digital data Hot Line stations. Data modules used for Hot Line stations must be assigned default dialing. The default dialing number assigned to the data module becomes the Hot Line destination number when the data module is administered as a Hot Line station.

If a DATA button is assigned for a digital data Hot Line station, the DATA button can be used to bypass the Hot Line designation. This is done by setting up a data call with the voice terminal and then using 1-button transfer to connect the data terminal to the call.

1-Button Transfer

The 1-button transfer function of the Data Call Setup feature can be used to override the Hot Line assignment for a Hot Line data station and complete a call to a destination other than the Hot Line destination for that station.

ISDN/PRI (Integrated Services Digital Network/Primary Rate Interface)

The data call setup feature is used to establish data call connections to and from ISDN/PRI trunking facilities. Access for a given terminal is based on COS. The *interworking* function makes the use of ISDN/PRI facilities essentially transparent to the user. The only noticeable difference will occur if the Display EM Voice Terminal feature is being used in conjunction with Data Call Setup, and the far end of the ISDN connection provides called terminal name or number display information.

ISN (Information System Network) Interface

The Data Call Setup feature is used with the ISN Interface feature from the System 85 side of the interface. This allows System 85 data terminal users to place data calls to data end points on a local ISN. ISN station users can also place calls to data end points on the local System 85 and access other network connections through the System 85. Calls from the System 85 side require two stage dialing. That is, the user must first dial an access code or extension number to reach the ISN Interface port, receive a second dial prompt from the ISN Network Controller, and then dial the desired ISN data end point.

APLT (Advanced Private Line Termination)

(Formerly Public Network Access) Access to a remote data end point over public facilities is the same as that described for the DOD or appropriate network interface feature (i.e., AAR, ACCUNET Interface, ISDN Interface, or IXC [Interexchange Carrier] Access feature).

Last Number Dialed

The Last Number Dialed feature does not redial keyboard dialing sequences because these sequences use Abbreviated Dialing to outpulse the digits.

Modem Pooling

The Modem Pooling feature works with the Data Call Setup feature to support off-premises data connections. Either incoming or outgoing calls are supported. Modem Pooling provides analog-to-digital and digital-to-analog signal conversions when required.

Multiple Listed Directory Numbers

Attendant seeking incoming calls cannot connect directly to a DCP (Digital Communications Protocol) interfaced data end point. To complete such a call requiring a conversion resource, the attendant must extend the call to a multiappearance voice terminal that has a Data button assigned for the desired data end point. The multiappearance voice terminal can then transfer the call to the data end point using 1-button transfer procedures.

Precedence Calling

Incoming Precedence Calling calls cannot preempt calls connected using the Data Call Setup feature. Precedence calls directed to data call setup connections are routed to the attendant.

Queuing

Either ringback or off-hook queuing is available for voice terminal data call setup using 1-button transfer. However, when keyboard dialing is used, only off-hook queuing is available. Going on-hook after queuing on a data call originated using keyboard dialing results in disconnect. Also, attempting to transfer an on-hook queued call to a data terminal before the call is completed will result in a disconnect.

Remote Access

Remote access trunks can be used to access data extensions on the System 85. Touch-tone dialing must be used to access the data extensions directly. Rotary trunks can access the attendant, who can then transfer the call to the data extension. Modem Pooling cannot be used in this last case, since the Transfer feature is used instead of a DATA button.

Restriction—Attendant Control of Voice Terminals

Restrictions, such as Outward Restriction, which would prevent a data extension from dialing an outside data endpoint can be applied by the attendant. If the data extension has an associated DATA button appearance on a voice terminal, the voice terminal could originate the data call and use the 1-button data call transfer procedure to establish the call, unless the same restrictions are applied to the activating voice terminal.

Tenant Services

Data Call Setup is compatible with the Tenant Services feature. In general, Data Call Setup works within a partitioned switch in much the same way as voice terminal dialing.

KEYBOARD DIALING

Keyboard dialing is a partitioned function of the Data Call Setup feature. A data terminal user (in a partition other than Extension Partition 0) can use keyboard dialing to access data trunk groups that are dedicated to or shared with the partition. If the data terminal user tries to access any other data trunk group, the switch will return Intercept Treatment to the calling party.

A data terminal user in Extension Partition 0 can use keyboard dialing to access any data trunk group in the switch.

MNEMONIC DIALING

The *mnemonic dialing* list, assigned in Procedure 013 Words 1 and 2, is a system-wide resource. These 1000 names are shared by every partition in a partitioned switch.

Mnemonic dialing is a partitioned function of the Data Call Setup feature. A data terminal user (in a partition other than Extension Partition 0) can use mnemonic dialing to access data trunk groups that are dedicated to or shared with the partition. If the data terminal user tries to access any other data trunk group, the switch will return Intercept Treatment to the calling party. (This Intercept Treatment is returned after a disallowed name has been converted to digits that are outpulsed by the switch.)

A data terminal user in Extension Partition 0 can use mnemonic dialing to access any data trunk group in the switch.

DEFAULT DIALING

Default dialing numbers are not checked for legality at the time they are assigned, but calls to these disallowed numbers are denied when the digits are outpulsed by the switch. When a data terminal user attempts to use default dialing to place a call over another partition's trunk group, the switch returns intercept treatment to the calling party.

A data terminal user in Extension Partition 0 can use default dialing to access any data trunk group in the switch.

Transfer

The Transfer feature can be used to set up data calls in lieu of a DATA button. This method does not include a Modem Pooling conversion resource, however. If the call requires the resource, the call attempt fails. See also the DCS interaction. Transfer disallows the use of Data Preindication.

Trunk Verification—Voice Terminal

The keyboard dialing form of Data Call Setup is used with the Trunk Verificationice Terminal feature to identify Modem Pooling trunk groups and trunks that need to be checked. The call progress message ''RINGING XXX XXX'' identifies the trunk group and trunk of the digital member of the Modem Pooling conversion resource assigned. This information can be used to obtain the dial access code used with the Trunk Verificationice Terminal feature. Note that the Trunk Verificationtendant feature cannot be used to check Modem Pooling trunks.

RESTRICTING FEATURE USE

Restrictions that can be administered to voice terminal extensions can also be administered to data extensions. Restrictions can either be activated toward an extension by the attendant for temporary use or assigned in switch translations for more permanent use.

Attendant Control of Voice Terminals Restrictions

The attendant can activate the following restrictions using the Attendant Control of Voice Terminals feature:

a. Terminal-to-Terminal Restriction

b. Termination Restriction

c. Total Restriction

d. Outward Restriction.

Voice Terminal Restrictions

Fixed Voice Terminal Restrictions that can restrict the Data Call Setup feature include the following:

a. Origination Restriction

b. Termination Restriction

c. Terminal-to-Terminal Only Restriction

d. Inward

e. Outward.

HARDWARE REQUIREMENTS

The following special hardware items are required for the Data Call Setup feature:

- Tone Detector Circuit

  The tone detector circuit identifies call-progress tones and provides call supervision signals. These signals support off-premises and keyboard (terminal) dialing.

- Data Modules

  The System 85 uses the DCP (Data Communications Protocol) for internal digital transmissions and for the Data Call Setup feature. Data modules provide protocol conversion for equipment using an EIA protocol (or bysinc protocol) to DCP for interface with the switch. The following data modules are available:

  — DTDM (Digital Terminal Data Module)

  — MDMs (Modular Data Modules)*

  — PDM (Processor Data Module)

  — TDM (Trunk Data Module)

  — 3270 (A, C, or T) Data Module.

---

* Data modules on earlier System 85s (Release 1 and Release 2, Version 1) were fixed units, either PDM or TDM. Later versions (other than the DTDM and 3270s) are modular and can be configured as either MPDMs or MTDMs.

FEATURE ADMINISTRATION

The Data Call Setup feature is assigned on a line COS (class-of-service) basis. The data preindication, 1-button data call transfer, and return-to-voice functions of the DATA button are assigned individually on a per button, per voice terminal basis. Keyboard Dialing, also known as terminal dialing, is assigned on a per data terminal or data module basis.

Data Call Setup is administered using the MAAP (Maintenance and Administration Panel). The customer can partially administer this feature using the SMT (System Management Terminal) or TCM (Terminal Change Management) feature. This feature can also be administered using CSM (Centralized System Management).

The following are the applicable MAAP and SMT procedures.

MAAP AND SMT PROCEDURES — DATA CALL SETUP			
PROCEDURE	**WORD**	**PURPOSE**	**SMT**
013	1	Assigns alphanumeric strings (names) for the mnemonic dialing function.	Yes
013	2	Assigns telephone numbers to the alphanumeric strings entered in Procedure 013, Word 1 for mnemonic dialing.	Yes
013	3	Displays the number of mnemonic dialing names that can still be added to the system list.	Yes
051	1	Assign a 72/74-Series terminal with data module and keyboard dialing.	Yes
052	1	Assign appearances for voice and data.	Yes
055	2	Assigns the DATA button to 72-Series or 74-Series voice terminals.	Yes
059	4	Assigns default dialing telephone number to a specific data module.	Yes
350	2	Assigns dial access code for terminal entry of default dialing (Abbreviated Dialing) list item.	No

The following are the applicable TCM path names used with the AP 16.

TCM SCREENS — DATA CALL SETUP	
PATH NAME	**PURPOSE**
terminal-change system mnemonic-dial	Displays the number of mnemonic dialing names available. Also assigns new mnemonic names and associated telephone numbers or changes telephone numbers associated with existing names.
terminal-change terminal equipment	Assigns a 72/74 Series voice terminal with data module and terminal dialing. Also assigns a data module with terminal dialing.
terminal-change terminal buttons	Assigns appearance and feature buttons to a multi-function voice terminal.

The following are the applicable FM path names used with the AP 16.

FM SCREENS — DATA CALL SETUP	
PATH NAME	**PURPOSE**
facilities-mgmt system-parameters mnemonic-dial	Displays the number of mnemonic dialing names available. Also assigns new mnemonic names and associated telephone numbers or changes telephone numbers associated with existing names.

The following are the applicable CSM Command Paths utilizing the **admin** area of TCM or FM.

CSM SCREENS — MASKS DATA CALL SETUP		
APPL'N	**OBJECT**	**PURPOSE**
TCM	mnemonic-dialing	Assigns alphanumeric strings (names) for the mnemonic dialing function, and assigns telephone numbers to the alphanumeric strings. (To display the number of mnemonics stored in the system, use **total-mnemonics-display**).
TCM	This command will be set type: i.e., 36-button, 12-button, bct, data-module, feature-module, coverage-module, vds, idt, or pt510.	Assigns voice terminal(s) with data module(s) and keyboard dialing. Assigns appearances for voice and data. Assigns the DATA button to the voice terminals, and assigns the default dialing telephone number to a specific data module.
TCM/FM	first-digit	Assigns the first digit of the feature dial access code (if required).
TCM/FM	dial-access-code	Assigns the feature dial access code for terminal entry of default dialing (Abbreviated Dialing) list item.

DATA COMMUNICATIONS ACCESS

DESCRIPTION

The DCA (Data Communications Access) feature provides an analog interface to local (on-premises) computer facilities. This feature is useful for host computers already setup with data sets (modems) for analog conversion. DCA can also be useful when a large percentage of calls to the supported host will be from analog facilities (analog trunk calls or analog interfaced local terminals). DCA ports are connected directly to analog tie trunk circuits on the System 85. Figures 39-1 and 39-2 show several types of data endpoints that can access the host through these tie trunk circuits.

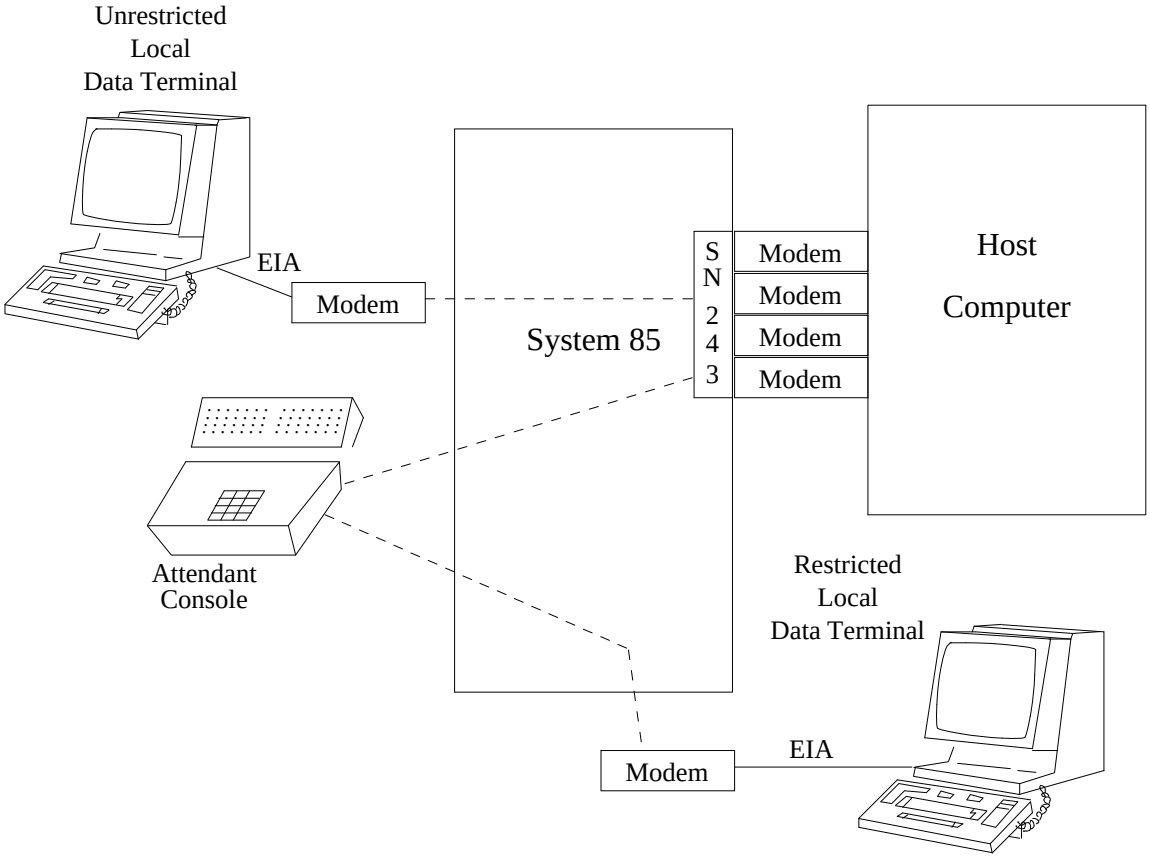

Figure 39-1. Data Communications Access, On-Premises Connections

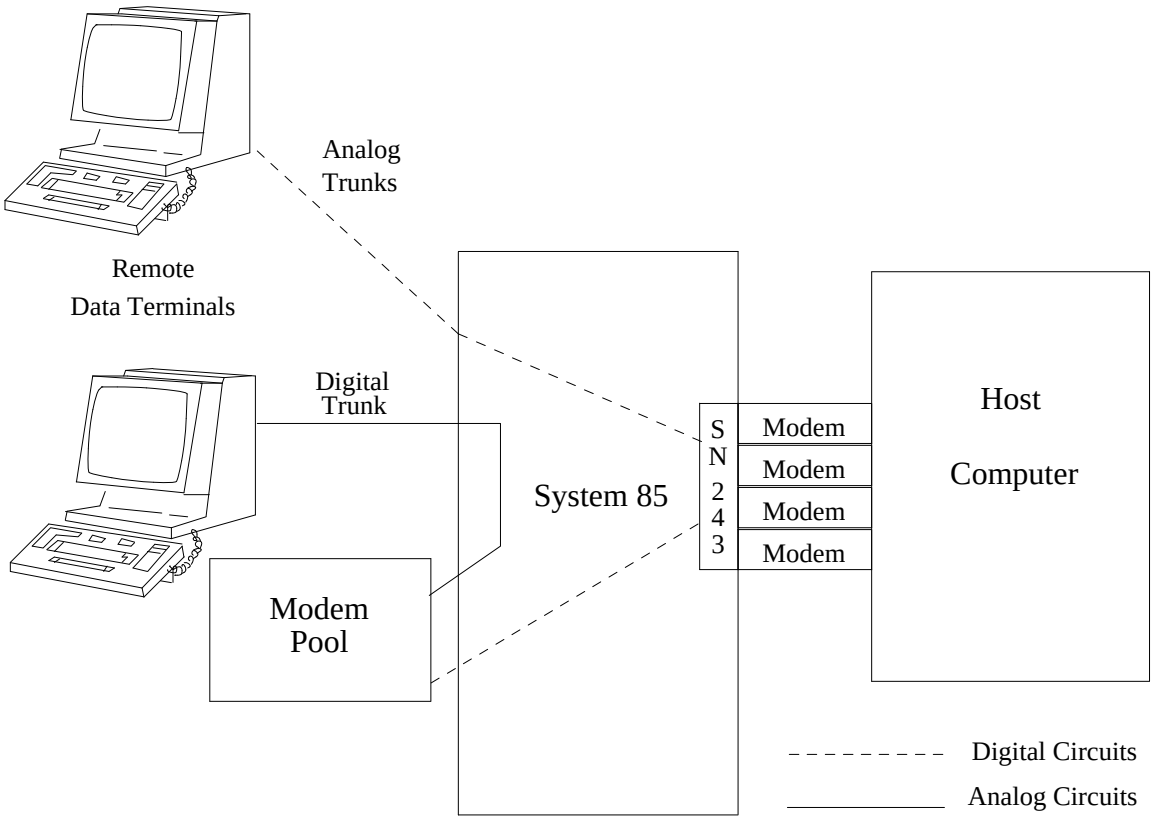

Figure 39-2. Data Communications Access, Off-Premises Connections

Figures 39-1 and 39-2, show some typical DCA connections. Most DCA users will access the host as shown in Figure 39-1, using an analog voice terminal paired with a data terminal and modem (*Analog Data Call Setup*). Access to the host through the attendant console is also shown to illustrate the attendant's ability to extend data calls for restricted users (see Restricting Feature Use). It should be noted that this attendant ability applies only to the DCA feature (not the Host Access feature) and that attendant extended calls are not provided with Data Protection—Temporary.

Figure 39-2 shows that external (off-premises) data calls can also access DCA ports. External data calls that use analog trunks can access DCA ports directly. External data calls that come in on digital trunks can access DCA ports if the Modem Pooling feature is available. However, digital interfaced (DCP) terminals on the local switch are not supported by local Modem Pooling. Features that support digital data endpoint access to a local host computer include: the Host Computer Access feature and the DMI (Digital Multiplexed Interface) feature.

DCA ports usually appear as trunk circuits arranged in trunk groups on the System 85. In this way, the DCA feature can take advantage of trunk features, such as Queuing and Route Advance, to improve user access to the host computer (see Interactions With Other Features).

Feature History and Development

This feature was first available on System 85 in Release 1. There have been no changes to this feature since its introduction.

USER OPERATIONS

Analog Voice Terminal Users:

Data users interfaced to System 85 via an analog voice terminal and modem use the Analog Voice Terminal, Data Call Setup procedures to access the DCA feature.

Specific operations may vary depending on the type of modem used. The following procedures are based on use of the DATAPHONE Modem 300/1200.

- Go off hook on the associated voice terminal (Dial tone).
- Dial the DCA access code or extension number (Call-progress tones, i.e., ringing tone).
- When the host computer responds (Data tone), press the DATA key to transfer control of the call to the modem.

  (When the connection has been successfully setup, an appropriate login prompt appears on the CRT).

Off-Premises Analog Facility Users

DID (Direct Inward Dialing):

When properly administered (DCA access available via extension number steering) an off-premises data user can access the DCA ports over the public network.

- Dial the 7- or 10-digit number assigned for DCA access (call progress tones).
- When the host computer responds (Data tone), press the DATA key to transfer control of the call to the modem.

  (When the connection has been successfully setup, an appropriate login prompt appears on the CRT).

Remote Access:

An off-premises data user with access to a System 85 Remote Access feature, can access the DCA feature as follows:

- Using a touch-tone dialing terminal, dial the 7- or 10-digit Remote Access number for the System 85 (call-progress tones followed by System 85 dial tone).

- Dial the barrier or authorization code if required.
- Dial the DCA access code or extension number (Call-progress tones).
- When the host computer responds (Data tone), press the DATA key to transfer control of the call to the modem.

  (When the connection has been successfully setup, an appropriate login prompt appears on the CRT).

Access Via The Attendant:

In certain cases, DCA call attempts will be routed to the attendant. This is due to restrictions applied to the users or because of the type of facilities being used. The attendant can perform the dialing of the DCA access code and transfer the call to the restricted user if desired.

CONSIDERATIONS

ETN (ELECTRONIC TANDEM NETWORK) ACCESS

Users located on another switch in an ETN arrangement can access the host computer in two ways.

- *Extension Number Steering*

  If an Extension Number Steering conversion code is provided, it can also be dialed by ETN users after dialing the private network location code.

- *Routing Via Location Code*

  The DCA ports can also be reached via AAR (Automatic Alternate Routing). The DCA access code can be assigned a unique private network location code. The local switch will have two private network location codes in this case. One for routing local communications to voice terminals, attendants, etc. The other code routes data calls to the host computer. The extension number digits that follow the location code are ignored in this case, but still must be dialed to conform to the numbering plan.

INTERACTIONS WITH OTHER FEATURES

The following System 85 features affect or are affected by the operation of this feature.

Attendant DXS (Direct Extension Selection) With BLF (Busy Lamp Field)

When an extension number is assigned to a Data Communications Access port, a Data Communications Access trunk group can be accessed using the appropriate DXS button. However, the associated busy lamp does not indicate the busy or idle status of the Data Communications Access port.

AAR (Automatic Alternate Routing)

The DCA feature is compatible with the AAR feature for calls directed over ETN (Electronic Tandem Network), DCS (Distributed Communications Service), or ISDN (Integrated Services Digital Network) facilities.

CDRR (Call Detail Recording and Reporting)

The System 85 CDRR feature can provide statistical information for DCA calls. When the AP CDRR application is provided, the AP system manager can include this data in the CDRR reports.

CMDR (Centralized Message Detail Recording)

The System 85 CMDR feature can provide statistical information for DCA calls. This is the same information provided through CDRR or SMDR.

Data Protection

Data Protection—Permanent should be assigned to DCA trunk groups. This prevents local system generated tones from interrupting data communications. These tones are issued in response to the activation of certain features, such as Override and Priority Calling. The permanent version of the Data Protection feature should be used as DCA port circuits will be used for data communications only, and this will provide protection for attendant extended calls which cannot use the temporary form of Data Protection.

DID (Direct Inward Dialing)

Users located off-premises can use public network DID trunks to reach the host computer. For this application, the DCA trunk access code is assigned to an Extension Number Steering conversion code. Extension Number Steering translates an otherwise unused extension number to the dial access code.

Hunting

The Hunting feature is used to check if an alternate trunk circuit can serve a call when the circuit dialed is busy. Hunting is automatically provided for trunk circuits arranged in trunk groups. When dialing a DCA trunk group, the user is provided with access to the first of as many as 99 idle computer ports. Trunk groups can also be combined using Route Advance to provide additional hunting.

ISDN (Integrated Services Digital Network)

The DCA feature can be access by callers using ISDN facilities (either public or private), providing that the Modem Pooling feature is available locally.

Last Extension Dialed

The Last Extension Dialed feature cannot be used to redial calls to Data Communications Access trunk groups that use extension number steering.

Last Number Dialed

The LND feature can store and redial DCA calls to a host computer.

Modem Pooling

Modem Pooling provides support to the DCA feature for incoming calls that use digital facilities (DS1 trunks). Without Modem Pooling, these calls cannot be successfully connected to the DCA ports.

Queuing

The Queuing feature is compatible with the DCA feature. Queuing can provide a waiting list for DCA trunk groups when these data resources are busy. Then, as resources become available, the first user in queue is served.

A DCA trunk group can be directly accessed using a data terminal. For data-terminal access, off-hook queuing is the only type of queuing that can be used. With off-hook queuing, the data terminal user receives a RINGING prompt until a circuit becomes available.

A DCA trunk group can also be indirectly accessed using a voice terminal and then transferring the call to an associated data terminal. For voice-terminal access followed by transfer to a data terminal, either off-hook or on-hook queuing can be used. For off-hook queuing, the switch returns the music, announcement, or silence. But, for on-hook queuing, the calling party receives confirmation tone and then goes on-hook to wait for the queuing callback.

To allow data terminals to directly access and voice terminals to indirectly access the same DCA trunk group, off-hook queuing must be assigned the DCA trunk group.

If the calling party hears reorder tone, the queue might be full. The user should go on-hook and try again.

Remote Access

The System 85 Remote Access feature provides users with access to System 85 features and services from off-premises locations over the public network system. Included in the features and services available is access to DCA ports. Remote Access users can access the host using the DCA access code or the Extension Number Steering code just as though they were calling from a local terminal. Remote Access users must, however, first gain access to the switch by dialing a barrier or authorization code.

Route Advance

The Route Advance feature provides access to as many as five trunk groups with a single access code. When every circuit in the first trunk group is busy, the system checks the other trunk groups for an idle circuit. Since each data trunk group can contain as many as 99 trunks, this arrangement can provide access to as many as 495 DCA ports using a single dial access code.

SMDR (Station Message Detail Recording)

Same as for the CDRR feature shown earlier.

Tenant Services

Data Communications Access (analog access to a host computer) is a partitioned feature on System 85.

Line-side computer access is partitioned using partitioned extension numbers. Each extension number is assigned to a modem and is usually included in a hunt group. In turn, the modem's extension number is assigned to an extension partition allowing data-terminal access for users in that partition and Extension Partition 0.

Trunk-side computer access is partitioned using partitioned trunk groups. Since the DCA trunk type (37) can be partitioned, access to these trunk groups can be dedicated to or shared by an extension partition. However, if a computer is accessed from outside the switch, *trunk-side* partitioning would have no effect. There are no partitioning checks between the incoming trunk group and the outgoing DCA trunk group.

RESTRICTING FEATURE USE

Attendant Control of Trunk Group Access

Calls to DCA ports can be restricted by applying Attendant Control of Trunk Group Access to the DCA trunk groups. Any attempt to access a DCA port is redirected to an attendant for screening. The attendant can then transfer the call to a DCA port. Attendant-extended data calls cannot use Data Protection—Temporary (see **Interactions**). Therefore, Data Protection—Permanent should be assigned to the DCA Trunk Group if this control option is to be used.

Attendant Control of Voice Terminals

An attendant can restrict selected terminals from access to the DCA feature with the Attendant Control of Voice Terminals feature. An attempt to access a DCA port by one of these restricted terminals is redirected to the attendant for screening. The attendant can then decide whether or not to extend the call. Again, attendant-extended calls cannot use Data Protection—Temporary (see **Interactions**). Therefore, Data Protection—Permanent should be assigned to the DCA Trunk Group if this control option is to be used.

Automatic Alternate Routing and Facilities Restriction Levels

FRLs (Facilities Restriction Levels) provide a means of restricting terminal access to trunk groups via the AAR (Automatic Alternate Routing) feature. The DCA trunk group(s) is placed in a separate AAR pattern to which an FRL is assigned. When calling the DCA number, the user's FRL is compared to the FRL of the AAR pattern before access to the DCA port is granted. The attendant can also use the alternate-FRLs attribute to alter these restrictions when appropriate.

Miscellaneous Trunk Restrictions

Local voice terminal lines may be restricted from accessing a DCA trunk group by the Miscellaneous Trunk Restriction feature.

Trunk-to-Trunk Restrictions

Trunk-to-trunk restrictions applied to DCA trunks restrict trunk calls from direct access to the host computer. Attendant assistance is required to reach DCA ports from the off-premises locations. These attendant-extended calls are denied Data Protection.

Trunk Group Restrictions

Access to DCA ports via a trunk dial access code can be restricted by activating ‘‘dial access denied’’ for the trunk group. This makes DCA access possible only via the Extension Number Steering feature or the AAR feature. These features use indirect access to the DCA ports.

HARDWARE REQUIREMENTS

The following special hardware is required for the DCA feature.

- SN243 circuit pack

  Each computer port appearance of the DCA feature requires the use of a data port circuit on the SN243 circuit pack. A single pack contains four circuits. System engineering determines the number of circuit packs possible. The SN243 circuit packs can be installed in the same slots used by SN233 tie trunk circuit packs.

- Modem (Modulator/De-modulator)

  A Data Set (such as the 212A or DATAPHONE Modem 300/1200) is required at each analog data endpoint and each host computer port.

FEATURE ADMINISTRATION

The DCA feature administration is by assigning DCA ports to equipment locations and assigning the equipment locations to one or more trunk groups. The trunk groups are then administered as DCA trunk groups.

The DCA feature is administered using the MAAP (Maintenance and Administration Panel). The customer can partially administer this feature using the SMT (System Management Terminal). This feature can also be administered using CSM (Centralized System Management).

The following are the applicable MAAP and SMT procedures.

MAAP AND SMT PROCEDURES — DATA COMMUNICATIONS ACCESS			
PROCEDURE	**WORD**	**PURPOSE**	**SMT**
100	1	Assigns trunk type (DCA, Remote Access, Off-Premises Terminal), DAC, Route Advance, and dial access restriction.	No
101	1	Assigns trunk-group characteristics.	No
110	1	Assigns DAC for Trunk-to-Trunk Restrictions.	No
150	1	Assigns trunk circuits to trunk groups.	No
350	1	Assigns dial access codes.	No
354	2	Extension Number Steering codes.	No

The following are the applicable CSM Command Paths utilizing the **admin** area of TCM or FM.

CSM SCREENS — MASKS DATA COMMUNICATIONS ACCESS		
APPL'N	**OBJECT**	**PURPOSE**
FM	trk-grp	Assigns trunk type (DCA, remote access, off-premises terminal), DAC, route advance, and dial access restriction. Assigns trunk-group characteristics, and trunk circuits to trunk groups.
FM	tandem-trk-trk	Assigns DAC for trunk-to-trunk restrictions.
TCM/FM	first-digit	Assigns the first digit of the feature dial access code.
TCM/FM	dial-access codes	Assigns the dial access codes for this feature. (System 85 R2 V4) The dial access code can be up to four digits long.
TCM	dac-to-extension	Creates an association between an extension or steering code and a dial access code.
FM	station-no-steering	(System 85 R2 V3 and V4) Creates an association between an extension and an office location code (RNX). When an extension is associated with an RNX, the extension is then in a steering state.

DATA PROTECTION

DESCRIPTION

The Data Protection feature blocks intrusions by bridge-on features (e.g., Call Waiting, Override, Busy Verification) that would disrupt data transmissions. This protection applies to intrusions from the local switch only. Unwanted tones generated by a distant switch must be blocked at that end. Any signals present on an incoming data transmission are seen as data.

The Data Protection feature is available in two forms: Temporary and Permanent.

Data Protection—Temporary

The temporary form is activated by users on a per call basis. This is done using a dial access code (or an administrable feature button if available). This option is useful for lines that are used for both voice and data calling (i.e., when a voice terminal is used with an acoustic coupled modem).

Data Protection—Permanent

The permanent form is assigned via switch translation to a line or trunk group. With this form, data protection is provided automatically for all calls (including voice calls) using these lines and trunks. The permanent form is useful for lines and trunk groups that are used exclusively for data calls.

Feature History and Development

This feature was first available on System 85 in Release 1. There have been no changes to this feature since its introduction.

USER OPERATIONS

Data Protection—Temporary:

- Go off-hook and dial the data protection—temporary access code,

  or

- Press the Data Protection feature button if provided (confirmation tone).

- Dial the data extension number or access code (call-progress tones).

Data Protection—Permanent:

Data Protection—Permanent does not require any user action. It is provided on every call involving the associated extension number or trunk group.

CONSIDERATIONS

Hard and Soft Processor Swaps

Data Protection—Temporary activations are stored in a status portion of switch memory. Therefore, if a data terminal user places a protected data call using the access code and then a hard swap occurs, the call does not remain protected after the hard swap.

Data Protection—Permanent assignments are stored in a translation portion of switch memory. Therefore, if a data terminal user places a protected data call and then a hard processor swap occurs, the data call remains protected after the hard swap.

INTERACTIONS WITH OTHER FEATURES

The following System 85 features affect or are affected by the operation of this feature.

Features Using Bridged-On Appearance or Injected Tones

Any feature that uses a bridge-on appearance or injects a tone into an established call would disrupt data flow and possibly cause erroneous data transmission. Data Protection blocks such features, including the following.

— Attendant Call Waiting

— Bridged Call

— Busy Verification of Lines

— Call Waiting

— Override

— Priority Calling

— Timed Recall on Outgoing Calls

— Trunk Verification by Attendant or Voice Terminal.

Attendant Control of Trunk Group Access

Trunks under control of the attendant group cannot be directly accessed. An attendant must access these trunks for voice terminal users. Data Protection—Temporary is not available for attendant-extended calls. These trunks, if used for data transmission, should be assigned Data Protection—Permanent.

AAR (Automatic Alternate Routing) and ARS (Alternate Rout Selection)

Data Protection—Temporary is not available to switch selected trunks (i.e., trunks selected by AAR.). When the calling terminal does not have Data Protection—Permanent, direct dial access to private network trunks is required to use Data Protection—Temporary.

Bridged Call

Attempting to bridge onto a call that has Data Protection activated is denied. The switch returns reorder tone.

Data Protection—Permanent is assigned to a class of service in Procedure 010, Word 3. The class of service is then assigned to an extension in Procedure 000, Word 1. When Data Protection—Permanent is assigned to a *shared extension*, this protection applies to every image of the extension.

Dedicated Switch Connections

To prevent interruptions from bridge-on features, Data Protection is automatically assigned to a Dedicated Switch Connection.

Modem Pooling

Data Protection—Permanent should be assigned to all trunk groups associated with Modem Pooling to prevent any intrusions attempted by bridge-on feature users.

Precedence Calling

The Data Protection feature takes precedence over the Precedence Calling feature. That is, a Precedence Calling call does not preempt a call with Data Protection active. Precedence calls directed to extensions with data protection active are diverted to attendant assistance. The attendant cannot override data protection by using attendant preemption. Data protection permanent should not be administered to an AUTOVON trunk as it invalidates the Precedence Calling feature.

Restriction—Attendant Control of Voice Terminals

Data Protection—Temporary is not available on attendant-extended calls. If the voice terminal extension is denied direct access to the trunk by the activation of this feature, Data Protection—Temporary cannot be used. Data Protection—Permanent can be provided, however.

Ringing—Distinctive Ringing

When Data Protection—Permanent is assigned to a class of service, all ringing for that class of service is 1-burst ringing.

Tenant Services

The Data Protection feature is a switch-wide resource that can be shared by data-terminal users in every partition. Data Protection—Permanent is assigned to a class of service, and the 63 classes of service are shared by the various extension partitions. Meanwhile, Data Protection—Temporary is activated with a dial access code, and dial access codes are common to the various extension partitions.

HARDWARE REQUIREMENTS

None.

FEATURE ADMINISTRATION

Data Protection—Temporary is assigned on a per-system basis. Dial access is then provided to all users provided with the access code. Data Protection—Permanent is assigned on a per-line class-of-service basis or on a per-trunk group basis.

This feature is administered using the MAAP (Maintenance and Administration Panel). The customer can partially administer this feature using the SMT (System Management Terminal). This feature can also be administered using CSM (Centralized System Management).

The following are the applicable MAAP and SMT procedures.

MAAP AND SMT PROCEDURES — DATA PROTECTION			
PROCEDURE	**WORD**	**PURPOSE**	**SMT**
010	3	Assigns Data Protection-Permanent to a line class of service.	Yes
103	—	Assigns Data Protection—Permanent to a trunk group.	Yes
350	1	Assigns the first digit of the dial access code for Data Protection—Temporary (if required).	No
350	2	Assigns the Data Protection—Temporary dial access code. 13 Data Protection—Temporary.	No

The following are the applicable CSM Command Paths utilizing the **admin** area of TCM or FM.

CSM SCREENS — MASKS DATA PROTECTION		
APPL'N	**OBJECT**	**PURPOSE**
TCM	class-of-service	Assigns Data Protection-Permanent to a line class of service.
FM	trk-grp	Assigns Data Protection-Permanent to a trunk group.
TCM/FM	first-digit	Assigns the first digit of the feature dial access code for Data Protection — Temporary (if required).
TCM/FM	dial-access-codes	Assigns the Data Protection—Temporary dial access code.

DEDICATED SWITCH CONNECTIONS

DESCRIPTION

A DSC (Dedicated Switch Connection) acts like a hard-wired link between two ports on the switch. In effect, this feature provides a full time open line between the assigned end points.

These connections include intraswitch line connections or trunk connections terminating to a point on a distant switch.

Once established, a dedicated switch connection remains in effect until specific action is taken to remove it. If a power failure occurs or a if the system is reinitialized, the switch automatically reestablishes the connection when power is restored or the initialization is complete.

A dedicated switch connection is administered as either active or inactive. In the active state, a communications path is maintained between the two ends of the connection. In the inactive state, the two ends of the connection are held in a busied out state, but are not interconnected. The connection can be changed from one state to the other through switch administration.

Prior to R2 V4, Issue 1.1, this feature could be used for either voice or data connections, provided that switch-originated signaling was not needed.

Signaling originated by the endpoints in a DSC connection was only permitted when both endpoints were connected to DS1 ports in the same System 85 module. For this arrangement, the DSC feature provided transparent signal passing.

Enhancements

In its initial form, the DSC feature had limited capabilities as a data feature. The DSC feature was primarily limited to analog circuits. This effectively limited dedicated switch connection service to voice connections. While analog-interfaced data connections could be made, the switch did not provide signaling, and leased line modems or their equivalent were needed to set up an effective data DSC.

Beginning with Release 2, Version 4, Issue 1.1, connections can be made between DCP data modules.

Dedicated switch connections between data modules can be established as long as:

- A communication path and the endpoints for the path are available when the DSC is activated.
- Data modules use compatible options (i.e., modes, data rates, synchronous or asynchronous transmission).

DSCs to Off-Premises Data End Points

When a DSC is established between data modules, the switch reserves and initializes the connection path and the terminating data module(s). Each endpoint is set up separately, so connections can be established between two data modules or between a data module and an AVD (Alternate Voice/Data) DS1 trunk. This allows the system to establish data DSCs to off-premises end points over clear channel DS1 carriers.

Switch Operations

The System 85, Release 2, Version 4, Issue 1.1 switch provides the signaling needed to initialize the data modules. That is, the switch sends signals to each DSC data module that cause it to go off-hook and start handshaking. After handshaking is successfully completed, the data module goes into the Transmit Data mode.

DSC Configurations

The following configurations will be possible with Data Dedicated Switch Connections:

- Connections between a host computer and either a data terminal, a printer, or another host computer
- Connections between two host computers with a high-speed link
- Connections between a host computer with a remote job entry terminal or printer station
- Connection between packet switches across a network of System 85 switches
- Using a DS1 trunk as the DCIU link between two switches without the need for Channel Division Multiplexors or DDS data sets.
- Establishing a mode 1 data module connection to 56 Kbps DSUs (Data Service Units) on a remote D4 Channel Bank by using a suppressed signaling DS1 trunk.

These configurations are illustrated in Figures 41-1 through 41-6.

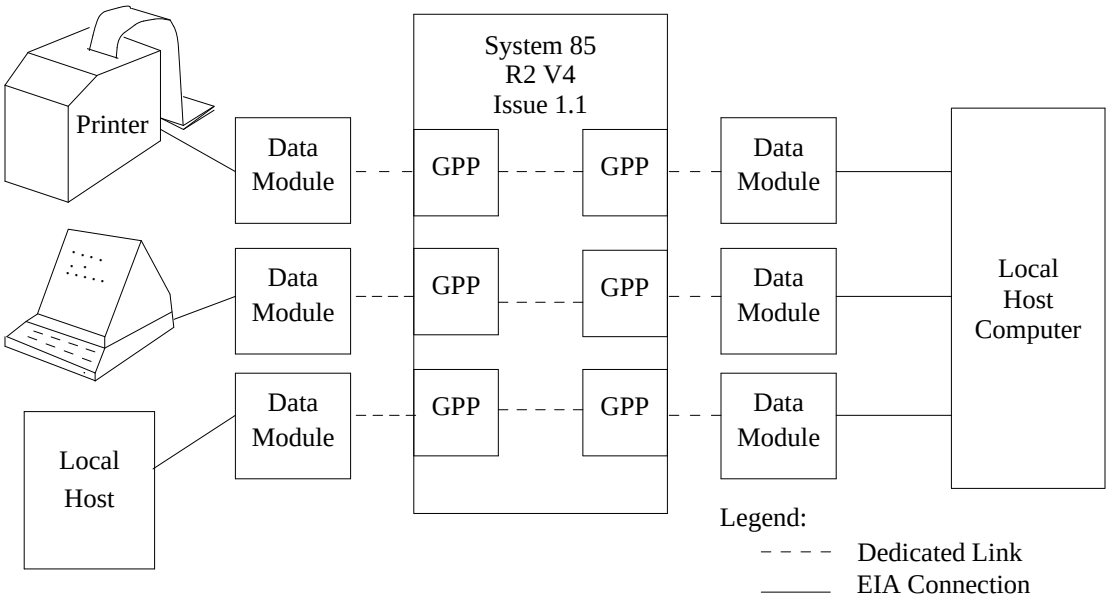

Figure 41-1. Local DSC Configurations

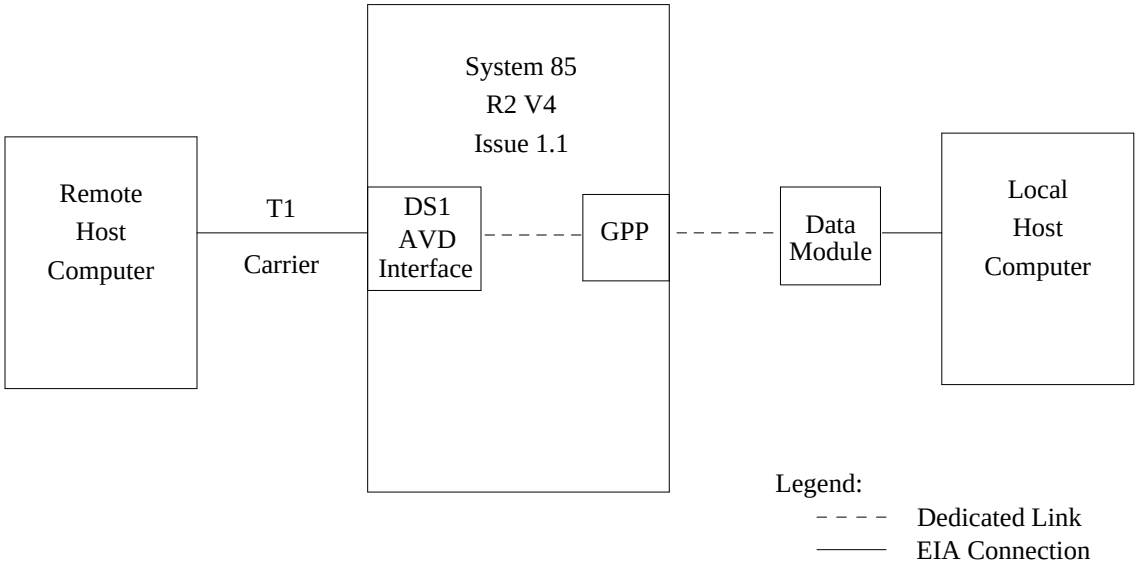

Figure 41-2. DSC Between Two Host Computers

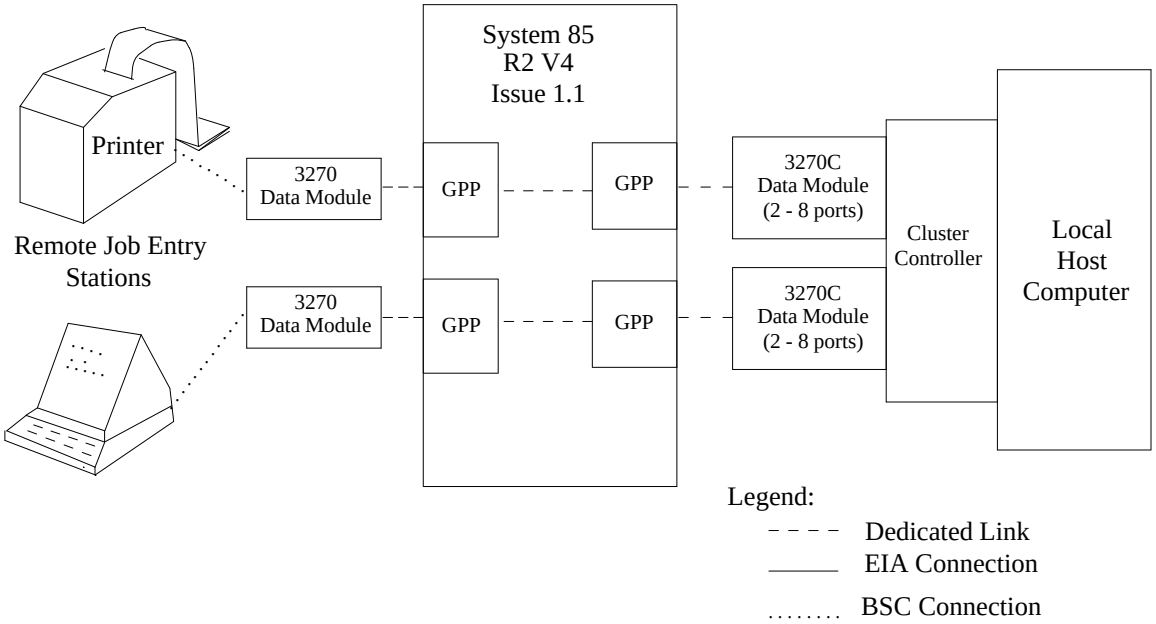

Figure 41-3. DSC Between Host Computer and Remote Job Entry Stations

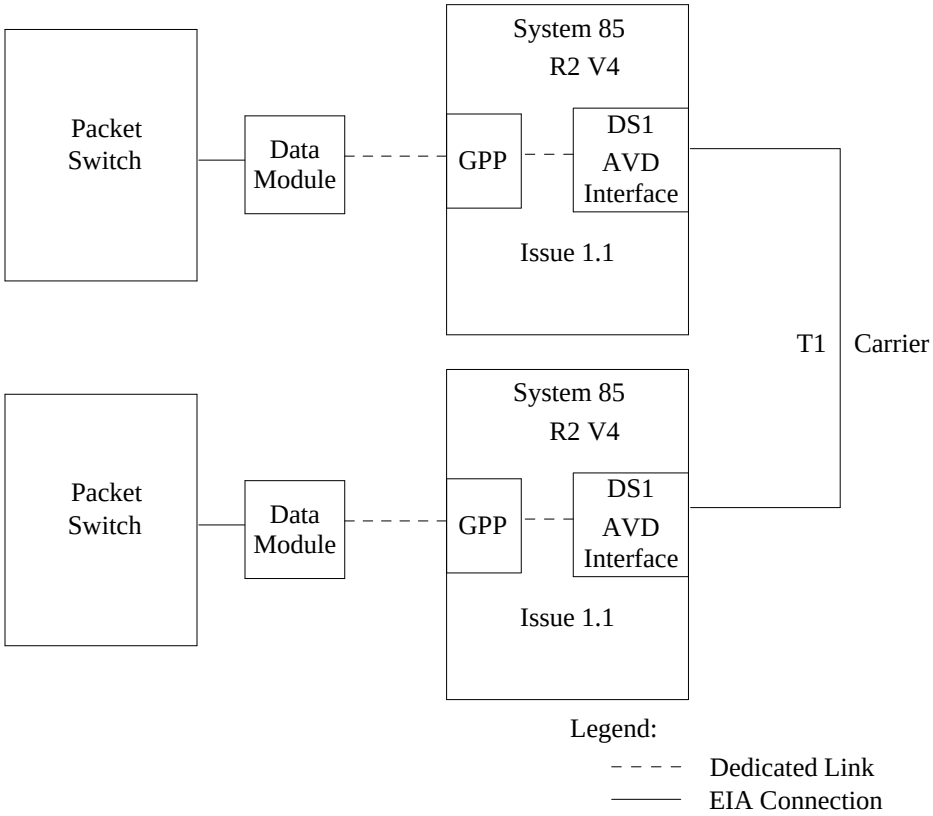

Figure 41-4. DSC Between Packet Switches

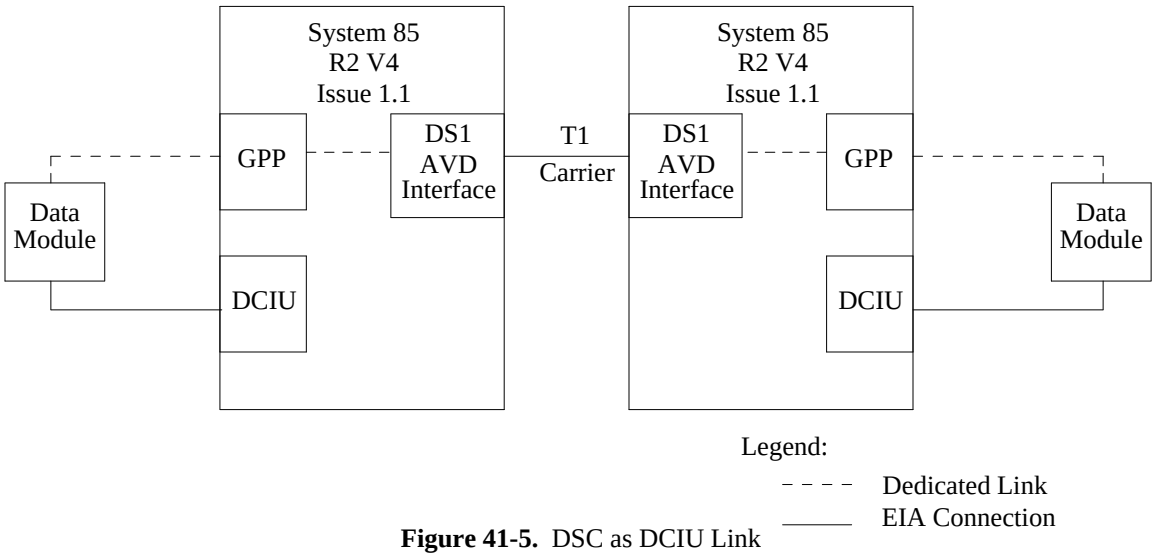

Figure 41-5. DSC as DCIU Link

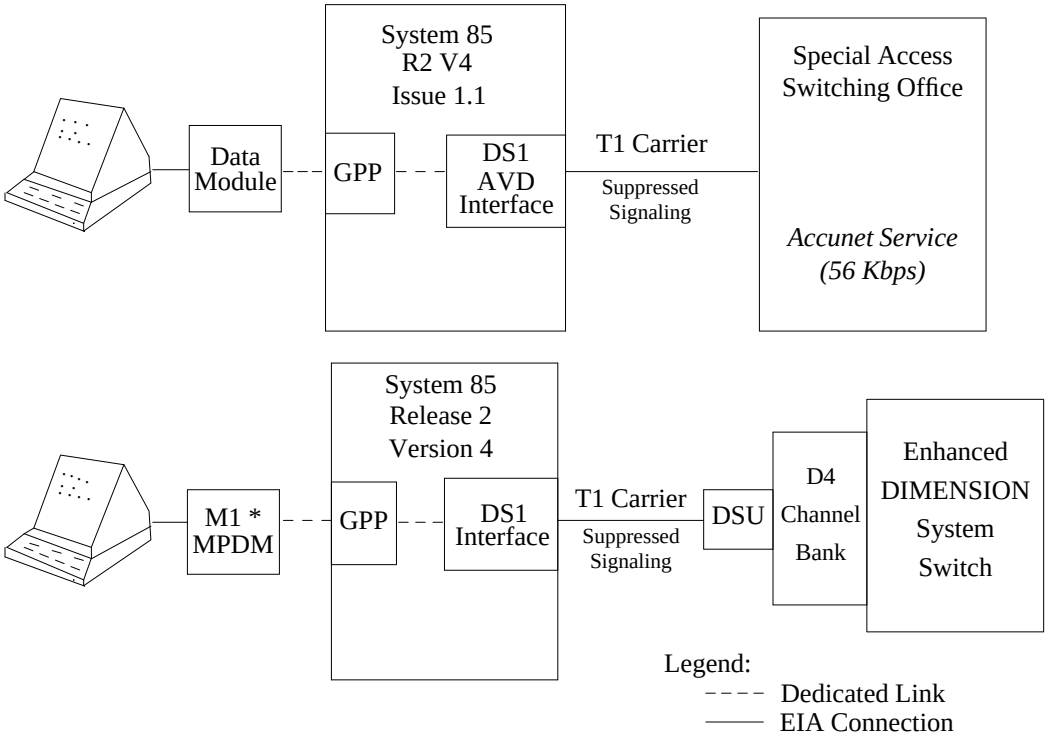

Figure 41-6. DSC to DS1 Trunk Using Suppressed Signaling Channel

Call Processing Changes to DSCs

The switch treats each endpoint of a DSC independently. The communication path is created during administration or initialization. Once initialized, endpoints are free to communicate as necessary. This means that DSCs on separate switches, connected by AVD trunks, do not need trunk signaling between switches. Call-processing software independently maintains each endpoint in the dedicated mode. This minimizes the needed call-processing intervention. Call-processing support is limited to audit routines ensuring that the connection is still up, and that the data modules are in the Transmit Data mode.

Feature History and Development

This feature was first available on System 85 with Release 2, Version 3. Beginning with R2 V4, Issue 1.1, the DSC feature provides signaling and supervision for DCP data modules.

USER OPERATIONS

Dedicated Switch Connections are fixed and automatic. Once a DSC is established, there are no user operations required for the feature.

CONSIDERATIONS

Capacity

Up to 1,023 Dedicated Switch Connections can be provided on a single switch. The actual number depends on the availability of time slots in the switch.

Intermodule DSCs (on a multimodule switch) are supported. However, transparent signal passing is not supported using this arrangement.

Processor Data Modules and Trunk Data Modules

With R2 V4, Issue 1.1, PDMs (Processor Data Modules) and TDMs (Trunk Data Modules) can be used as interface devices on DSCs. Prior to R2 V4, Issue 1.1, PDMs and TDMs could not be used as DSC interface devices. PDMs and TDMs require S Channel signaling on the switch side. This was not provided on a dedicated switch connection. Further, PDMs and TDMs rely on the switch for necessary call-control signaling which was not provided for a dedicated switch connection.

EIA Ports

With R2 V4, Issue 1.1, EIA ports can be used as interface devices on DSCs. Prior to R2 V4, Issue 1.1, EIA ports could not be used with dedicated switch connections. Like data modules, EIA ports require S Channel signaling and rely on the switch for necessary call control signals that were not provided for a dedicated switch connection.

3270 Series Protocol Converters

The 3270 Series is a group of protocol conversion units that provide DCP interface for IBM 3270 type BSC (Binary Synchronous Communications) cluster controllers and terminals. Beginning with R2 V4, Issue 1.1, the 3270 Series protocol converters operate in the dedicated mode.

Switch Services

Many switch services including call-origination signaling, call-termination signaling, and access to features are disabled.

Prior to R2 V4, Issue 1.1, the terminals or interfaces that connect to each end of the DSC must provide all required supervision, signaling, and maintenance. Beginning with R2 V3, Issue 1.1, the switch provides supervision and signaling for DCP data modules, but these modules must still provide the required maintenance.

The switch *does* perform audit checks to ensure that the connection remains intact and that the data modules are in the Transmit Data mode.

Rotary Dial Signals

When transparent signaling is used between DS1 ports on the same System 85 module, rotary dialing through a DSC typically works. However, this is not fully reliable, and is not guaranteed.

Touch-Tone Signals

If digit sending and receiving is required, the digits must be sent on a touch-tone cut-through basis. For ports involved in a DSC, System 85 does not collect dial pulses, detect touch-tone signals, or provide digit outpulsing or sending.

Incompatible Circuits

Certain System 85 circuitry *cannot* be used with the DSC feature:

— Attendant console and attendant conference circuits

— ANI (Automatic Number Identification) circuits

— Contact interface circuits

— DMI (Digital Multiplexed Interface) ports

— Multiappearance voice terminals

— Tone plant circuits.

Compatible Endpoints

The switch administrator should ensure that the pair of endpoints in a DSC are compatible (capable of mutual communication) without intervention by System 85.

DS1 DSC Trunks

When a DS1 trunk circuit is used, it must also be set up as a dedicated connection. This trunk circuit will normally be in the form of a tie trunk to another private switch, although it can be a leased line circuit through a CO (Central Office).

Connections to DS1 facilities are made on the assumption that the far end of the circuit connects to a DSC compatible device somewhere in the network. The local switch has no way to verify this connection.

Whenever possible, AVD DS1 trunk circuits should be used for dedicated switch connections that go off-premises. Bit-robbed DS1 trunks **with suppressed signaling** can be used if required; however, the quality of service cannot be assured. This type of trunk would be needed when the far end of the trunk terminates on a D4 channel bank rather than another System 85 switch.

Equipment Combinations

The following list shows permissible equipment combinations for a data DSC. Within this list, a data

DS1 trunk is an AVD DS1 trunk or a voice grade DS1 trunk with suppressed signaling.

- DCP (Data Communications Protocol) data line to a DCP data line
- DCP data line to a data DS1 trunk
- Data DS1 trunk to a data DS1 trunk.

Compatibility Requirements

The following restrictions apply when configuring a DSC:

- Both endpoints must be operating in the same mode.
- Mode 3 endpoints must be administered in complimentary status — one as originator and the other as terminator.
- Data modules must be administered as stations, not trunks.

Mixed Analog/Digital DSCs

The Dedicated Switch Connections feature does not support a mixed analog/digital configuration. A user may, however, be able to configure back-to-back digital and analog DSCs by hard-wiring (or cross-wiring) the digital DCP data module to a leased-line modem on an analog DSC. Such an arrangement would consume two DSCs and two time slots.

Resource Consumption

A dedicated switch connection consumes little processor time. However, a DSC uses two terminal ports and one switch time slot on a full-time basis. In systems with high usage or where assured Zero Blockage is needed, dedicated switch connections should be limited to essential applications or situations where the circuit will be in continuous or nearly continuous use.

For other applications, it may be desirable to consider features that consume switch resources only while in active use, such as the Hot Line feature or default dialing with the Data Call Set Up feature.

Hard and Soft Processor Swaps

Dedicated Switch Connections will endure a hard processor swap. However, Dedicated Switch Connections cannot be established during a hard swap.

The DSC relationships assigned in Procedure 360, Word 1 are stored in a translation portion of switch memory. Therefore, these relationships will endure a hard processor swap.

The Dedicated Switch Connections feature operates normally during a soft processor swap.

Commercial Power Failures

Once a DSC is established and a run-tape operation has been performed, a DSC remains in effect until specific actions are taken to remove it. If a power failure occurs or if the system is reinitialized, the switch automatically reestablishes the connection when power is restored or the initialization is complete.

INTERACTIONS WITH OTHER FEATURES

The following System 85 features affect or are affected by the operation of this feature.

Automatic Circuit Assurance

The ACA feature ignores a long-holding time threshold exception when a DSC is involved in the call.

Data Protection

The Data Protection feature is automatically assigned to a DSC to prevent interruptions from bridge-on features.

DMI (Digital Multiplexed Interface)

The DMI feature is not, at the present time, compatible with Data Dedicated Switch Connections.

DS1 Interface

If a pair of DSC ports reside in the *same* module and are DS1 ports, the following is available:

- If the ports are located on DS1 boards administered as Robbed Bit Signaling, the DS1 disabled signaling option (Procedure 000 for lines, and Procedure 116 for trunks) can be used to disable Robbed Bit Signaling for the ports. This provides a 64 Kbps clear channel through the DSC. If not, then DSC transparent signal passing is the default.
- If both ports are located on DS1 boards translated as AVD, then a 64 Kbps clear channel is provided.
- If a DS1 port on a robbed-bit DS1 board is connected to a DS1 port on an AVD board, the DSC feature provides transparent signal passing.
- A 64 Kbps clear channel is also available when two DS1 circuits are involved in the same DSC. System 85 assures frame synchronization between the two ports. However, a pair of DS1 ports cannot use super-frame synchronization.

The DS1 Interface feature is used to provide off-premises data dedicated connections service. The AVD DS1 service is the option of choice. However, voice grade DS1 service can be used as long as the circuit is administered with suppressed signaling.

Host Computer Access

The Host Computer Access feature is compatible with the Data Dedicated Switch Connections feature. For host computer ports to be assigned to a DSC, they must be administered as separate line appearances and interfaced with a DCP data module. These ports are not, however, provided switched services as are other host computer access ports.

ISDN/PRI (Integrated Services Digital Network/Primary Rate Interface)

When the ISDN/PRI feature is set up as AVD, the ISDN/PRI feature supports Dedicated Switch Connections.

Modem Pooling

The Modem Pooling feature does not support data dedicated switch connections.

Tenant Services

There are no tests in Procedure 360, Word 1 to ensure that the endpoints of a dedicated switch connection belong to compatible extension partitions. It is the responsibility of the system manager to ensure that these connections are allowed.

HARDWARE REQUIREMENTS

There are no special hardware requirements to implement this feature other than customer-provided equipment interfaced to the DSC ports.

Any existing DCP data module can be used. These data modules include:

- PDMs and TDMs
- DTDMs and Data Stands
- EIA ports
- 3270 Data Modules.

FEATURE ADMINISTRATION

The Dedicated Switch Connections feature is assigned on a per-switch basis. The DSC feature is assigned using the MAAP (Maintenance and Administration Panel).

The customer can administer this feature using the SMT (System Management Terminal), the TCM (Terminal Change Management) feature, the FM (Facilities Management) feature or CSM (Centralized System Management).

The following is the applicable MAAP and SMT procedure.

MAAP AND SMT PROCEDURE — DEDICATED SWITCH CONNECTIONS			
PROCEDURE	**WORD**	**PURPOSE**	**SMT**
360	1	Assigns a dedicated switch connection.	Yes

The following is the applicable TCM path name used with the AP 16.

TCM SCREEN — DEDICATED SWITCH CONNECTIONS	
PATH NAME	**PURPOSE**
terminal-change dedicated-conn	Assigns DSC to an equipment location.

The following is the applicable FM path name used with the AP 16.

FM SCREEN — DEDICATED SWITCH CONNECTIONS	
PATH NAME	**PURPOSE**
facilities-mgmt dedicated-conn	Assigns a DSC to an equipment location.

The following is the applicable CSM Command Path utilizing the **admin** area of TCM or FM.

CSM SCREEN — MASK DEDICATED SWITCH CONNECTIONS		
APPL'N	**OBJECT**	**PURPOSE**
TCM/FM	dsc	Connects two ports on a switch by a DSC connection. A DSC connects two ports directly so that a user on one is automatically connected with the other when the terminal's handset is picked up. (System 85 R2 V4) Provides dedicated connections between certain data modules and host computers with DMI, using Bit-Oriented Signaling only.

DIAL ACCESS TO ATTENDANT

DESCRIPTION

A voice terminal user can access an attendant by dialing a code, usually zero (0), or by dialing an LDN (listed directory number). In a switch with multiple attendants, a specific attendant can be accessed when an individual access code is assigned.

This feature permits a terminal user to check with the attendant for information or to request assistance. The attendant can then extend the call to another station or trunk, or activate features not directly available to the calling terminal.

Feature History and Development

This feature was first available for System 85 in Release 1. The ability to call an attendant using an LDN was first provided in Release 2, Version 3.

USER OPERATIONS

The following are the user operating procedures for this feature.

To Access an Attendant:

- Go off-hook. [Dial tone]
- Dial the attendant access code. [Ringback tone]

To Access an Attendant Using an LDN:

- Go off-hook. [Dial tone]
- Dial an LDN. [Ringback tone]

To Access a Selected Attendant:

- Go off-hook. [Dial tone]
- Dial the selected attendant access code. [Second Dial tone]
- Dial the selected attendant's assigned 2-digit position number. [Ringback tone]

CONSIDERATIONS

Attendant Conference Entry

A voice terminal user, including a Remote Access user, calling the attendant by Dial Access can request attendant conference service and be included as the first member of an attendant conference. However, once an attendant conference has been started, a user cannot use Dial Access to the Attendant and be added to an existing conference.

INTERACTIONS WITH OTHER FEATURES

The following System 85 features affects the operation of this feature.

Conference—Attendant Six Party

The requesting party (first member of the conference) can use Dial Access to Attendant and be connected to the conference circuit. However, once an attendant conference has been started, a station user cannot use Dial Access to Attendant and be added to an active conference circuit. The attendant must initiate the contact to add a party to an active conference circuit.

Intercept Treatment

The Attendant Diversion to Recorded Announcement function overrides the Dial Access to Attendant feature. When an attendant activates Attendant Diversion to Recorded Announcement, a local voice terminal user cannot reach the attendant queue or a selected attendant. Instead, these calls are diverted to the recorded announcement.

Malicious Call Trace

If a voice terminal user selectively calls the activating or the controlling attendant during an active Malicious Call Trace, the call is denied. The switch returns busy tone to the calling party. A controlling attendant unbusying his or her console will receive the call without disturbing the ICI display that contains the trace information.

Tenant Services

In a partitioned switch, the Dial Access to Attendant feature is limited. Each extension partition can be assigned to one attendant partition. (More than one extension partition can be assigned to the same attendant partition.) These associations between extension partitions and attendant partitions are used to determine whether the Dial Access to Attendant feature is allowed, and the system manager is required to establish these associations.

When a voice terminal user dials the ‘‘general’’ attendant access code (usually ‘‘0’’), the call can only complete to an attendant in the associated attendant partition. If there is no attendant partition associated with the user’s extension partition, the switch denies the call and returns intercept treatment to the calling party.

Local voice terminal users can dial an LDN to reach the attendant queue. When this is done, partitioning checks are made. When a voice terminal user (in a partition other than Extension Partition 0) dials an LDN, the call is allowed if the user's extension partition is assigned to the called attendant partition or if the user is calling Attendant Partition 0. If not, the switch denies the call and returns intercept treatment to the calling party.

A voice terminal user in Extension Partition 0 can use an LDN to call any attendant partition in the switch.

When a voice terminal user (in a partition other than Extension Partition 0) dials a selected attendant access code, the call is allowed if the dialed attendant resides in the associated attendant partition or in Attendant Partition 0. If not, the switch denies the call and returns intercept treatment to the calling party.

A voice terminal user in Extension Partition 0 is allowed to call a selected attendant in any partition.

Unattended Console Service—Alternate Console Position

The Alternate Console Position feature provides an alternate attendant position that can be used in lieu of a regular (primary) attendant position. Calls normally directed to the primary position route to the alternate position.

RESTRICTING FEATURE USE

The Dial Access to Attendant feature can only be restricted by denying a voice terminal the ability to originate calls. This can be done with the MAAP or SMT by applying Origination Restriction to a voice terminal, or the attendant can use the Attendant Control of Voice Terminals feature to apply Controlled Total Restriction to a voice terminal.

HARDWARE REQUIREMENTS

None.

FEATURE ADMINISTRATION

Assignment of the Dial Access to Attendant feature is on a per-system basis. This feature is administered using the MAAP (Maintenance and Administration Panel). This feature can also be administered using CSM (Centralized System Management).

The following are the applicable MAAP procedures.

MAAP PROCEDURES — DIAL ACCESS TO ATTENDANT		
PROCEDURE	**WORD**	**PURPOSE**
200	1	Enables access to a selected attendant (enter 2 in Field 5).
210	1	Assigns the equipment location of an attendant console position.
350	1	Assigns the first digit of the attendant dial access codes (if required).
350	2	Assigns the attendant dial access codes. The applicable encodes are as follows: 8 Attendant dial access code 30 Extension to selected attendant.

The following are the applicable CSM Command Paths utilizing the **admin** area of TCM or FM.

CSM SCREENS — MASKS DIAL ACCESS TO ATTENDANT		
APPL'N	**OBJECT**	**PURPOSE**
TCM	console-features	Assigns feature access to a selected attendant.
TCM	console-equipment	Administers an attendant console by putting it into or taking it out of service. Assigns the attendant interface and data channel equipment locations.
TCM/FM	first-digit	Assigns the first digit of the attendant dial access codes (if required).
TCM/FM	dial-access-code	Assigns the attendant dial access codes.

DIGITAL MULTIPLEXED INTERFACE

DESCRIPTION

The Digital Multiplexed Interface feature provides 23-channel, digital connectivity between the System 85 and a host computer.

In its original form, this feature used a DS1 signaling format similar to the AVD (Alternate Voice Data) service of the DS1 Interface feature. In this arrangement, twenty-four 64 Kbps (DS0) signals are multiplexed onto a 1.544 Mbps DS1 carrier signal. Of these, 23 DS0 channels are used for communications channels and 1 DS0 channel is reserved for signaling. This technique is called **common channel signaling**. Refer to the DS1 Interface feature for a detailed discussion of the differences between the AVD service (using common channel signaling) and the Voice Grade service (with robbed bit in channel signaling) available from DS1.

In System 85, Release 2, Version 4, the DMI feature is available in two versions: a BOS (Bit Oriented Signaling) version that is similar to the original form but with an enhanced signaling format, and a MOS (Message Oriented Signaling) version that is designed to function with the ISDN/PRI (Integrated Services Digital Network/Primary Rate Interface) feature.

The BOS (Bit Oriented Signaling) Version

The BOS version of the DMI feature uses an enhanced bit-oriented signaling format on the signaling channel for call control signaling. The DMI BOS version, like the original version, provides 23 communications channels and uses common channel signaling.

The enhanced DMI BOS is backward compatible with earlier versions of the DMI feature through a simple hardware upgrade. It provides all of the DS1 functionality of the earlier versions. Some of the supported connections include: System 85 to System 75, to host computers, and to toll network equipment (Special Access arrangements).

DMI BOS is a generally satisfactory arrangement. However, because it uses BOS, it must be connected to ISDNs through the *interworking* functions of the local switch. Interworking is described later in this section and in the ISDN/PRI feature section of this manual. As a result of the interworking requirement, the DMI BOS version cannot take full advantage of all ISDN features and services.

The MOS (Message Oriented Signaling) Version

The DMI feature is also enhanced in System 85, Release 2, Version 4, with the addition of a MOS version. The MOS version is fully compatible with the ISDN/PRI Interface feature. It is actually a specialized form of the ISDN/PRI. DMI MOS is similar to the BOS version in that it uses 23 DS0 communications channels (called B or bearer channels in ISDN terminology) and 1 DS0 signaling channel (call the D or data channel in ISDN terminology) multiplexed on a 1.544 Mbps, DS1 carrier link. This version also uses common channel signaling. However, the DMI MOS version uses the same message oriented signaling format that is used with ISDN for call control and signaling. Refer to the ISDN Interface feature for more information on the ISDN standards.

The Interworking Function

In System 85, Release 2, Version 4, an ISDN concept has been implemented that allows ISDN and non-ISDN features and services to work together to the maximum extent possible. In ISDN terminology, this concept is called *Interworking*. In effect, the System 85, Release 2, Version 4, switch contains two separate sets of call processing software: one for standard (non-ISDN) calls and one for ISDN calls. Interworking function essentially as follows.

Non-ISDN Originated Calls

Calls originating on the System 85 switch or calls coming into the switch from a non-ISDN trunk facility are handled by the standard call processing software. In this way, they are provided with all of the features and services allowed to their COS (Class-of-Service).

When the switch recognizes that the call is to go to an ISDN facility, it notifies the ISDN call processing software. The ISDN call processing routines perform all the functions necessary to support the ISDN side of the call. It also provides ISDN features and services, such as Call-by-Call Service Selection (the ISDN features and services are listed and described in the ISDN/PRI section of this manual). When both sets of call processing routines are ready, the call is completed.

ISDN Originated Calls

For calls received on an ISDN facility (trunk appearances, including DMI MOS ports), the calls are processed in the same way except in reverse order. The incoming call is first handled by the ISDN call processing software. The standard call processing software is notified by the ISDN layer that a call is ready for completion, and the standard call processing sets up and services the switch side facilities (stations or non-ISDN trunk connections) in the same way as a conventional incoming call. All of the standard switch features and services that would normally be available (based on COS) are provided.

Figures 43-1 and 43-2 illustrate how interworking operates with either the DMI BOS or the DMI MOS versions.

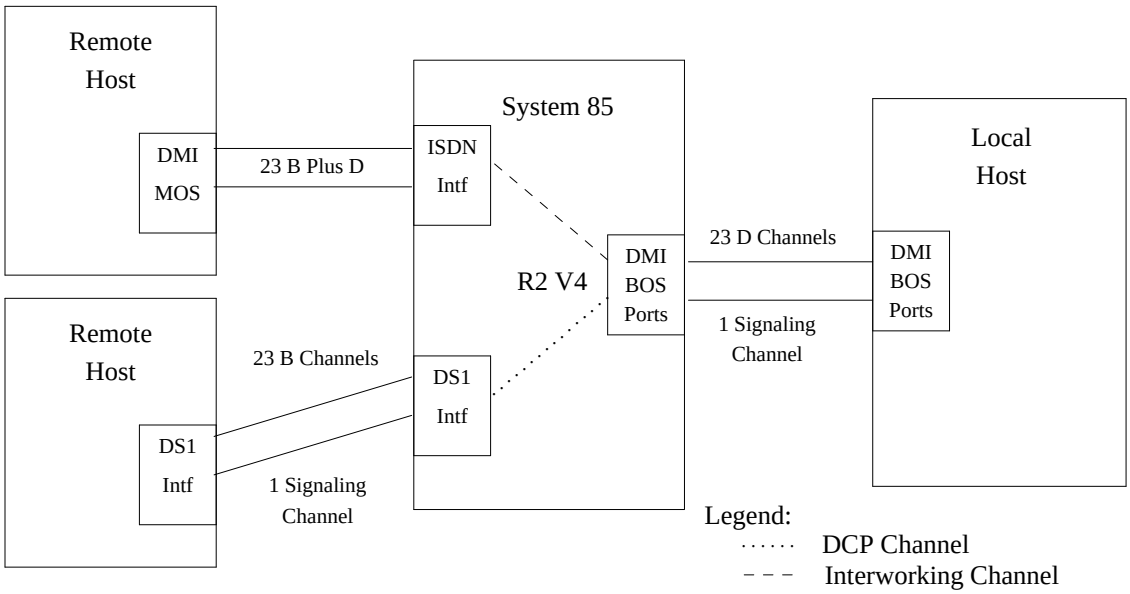

Figure 43-1. Interworking With DMI (Digital Multiplexed Interface) BOS (Bit Oriented Signaling)

It is important to note that the MOS version of DMI is available in Release 2, Version 4, *in addition to* the BOS version. That is, both versions can be used on the same system at the same time.

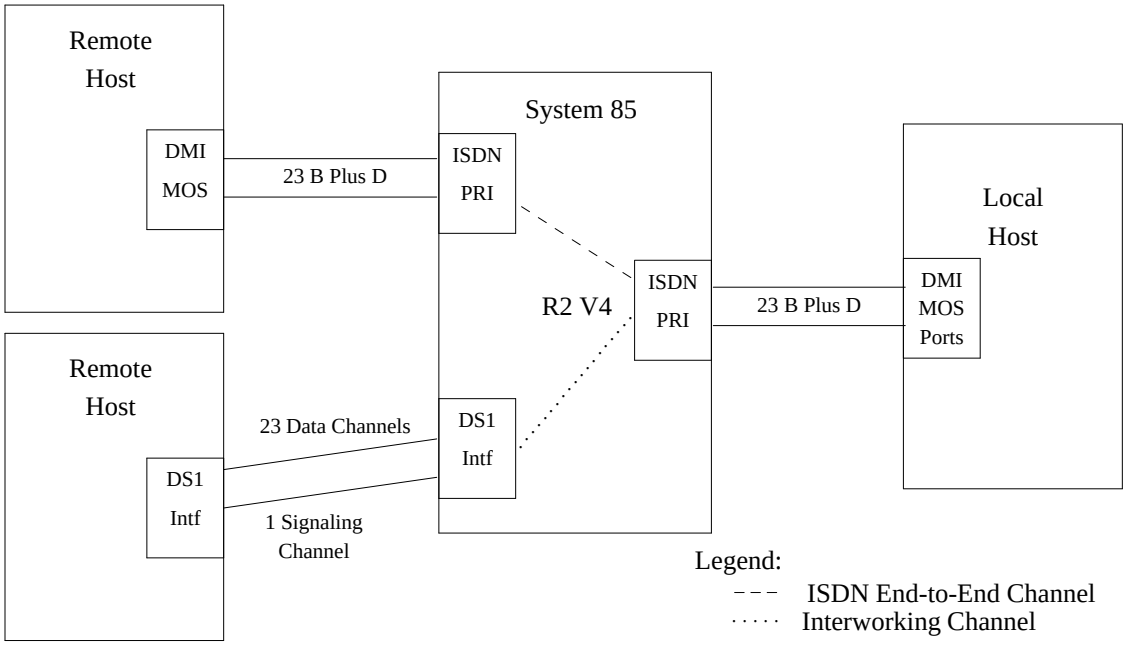

Figure 43-2. Interworking With DMI MOS (Message Oriented Signaling)

While DMI BOS and DMI MOS are not directly compatible, neither are they mutually exclusive. That is, the same host can have both a DMI BOS Interface and a DMI MOS Interface to the same System 85, Release 2, Version 4, switch. Figure 43-3 illustrates this arrangement.

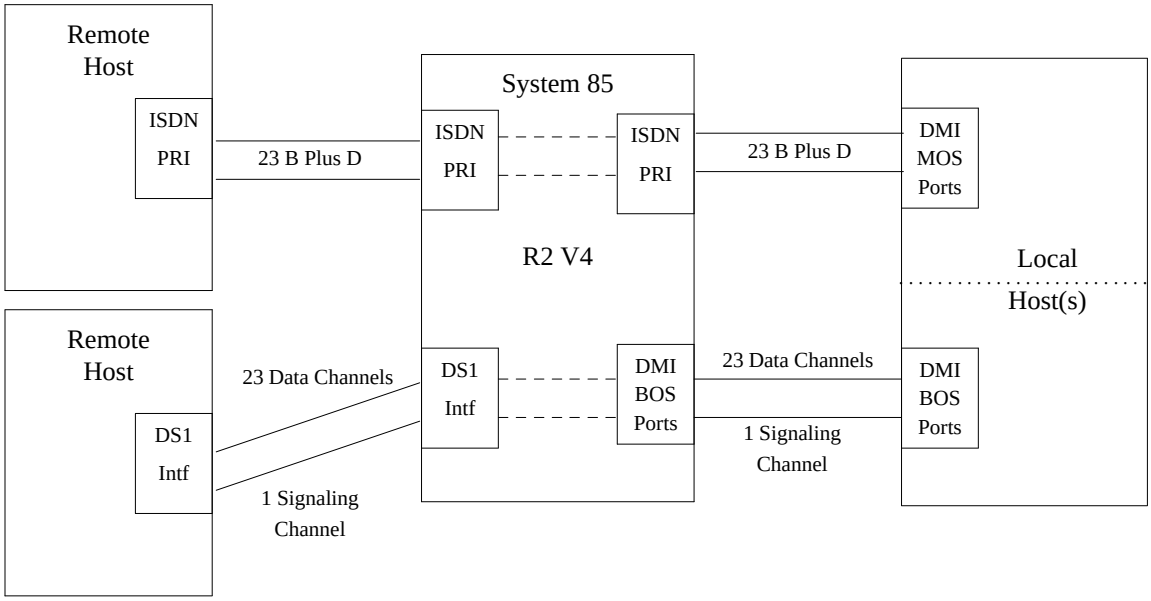

Figure 43-3. Multiple DMI (BOS and MOS) Arrangement

ACCESSING THE DMI

The data channels of a DMI host can be accessed by both analog and digital data endpoints, including data terminals and other hosts. The following are the basic connections possible with the DMI feature:

- Local data terminals:
  - — Digital interfaced data terminal (DTDM, PDM, 510D, 515 BCT, etc.) to DMI host, direct connection using DCP (Digital Communications Protocol)
  - — DMI host data endpoint to digital interfaced terminal
  - — DMI host data endpoints to other DMI host data endpoints.
- Trunk connections:
  - — Analog trunk facility to DMI BOS host via the Modem Pooling feature
  - — Analog trunk facility to DMI MOS host via the Modem Pooling feature and interworking function
  - — ACCUNET Service Interface trunk facility to DMI BOS host, direct connection using DCP
  - — ACCUNET Service Interface trunk facility to DMI MOS host, via interworking function
  - — Non-ISDN digital (AVD) trunk to DMI BOS host, direct connection using DCP
  - — Non-ISDN digital (AVD) trunk to DMI MOS host, via interworking function
  - — ISDN/PRI trunk facility to DMI MOS host, direct (ISDN End-to-End) connection.
  - — ISDN/PRI trunk facility to DMI BOS host, via interworking function.

- Host-to-host connections:
  - — Analog interfaced host (Data Communications Access feature) to DMI BOS host via the Modem Pooling feature
  - — Analog interfaced host (Data Communications Access feature) to DMI MOS host via the Modem Pooling feature and interworking function
  - — Non-DMI digital interfaced host (Host Computer Access feature) to DMI BOS host, direct connection via DCP
  - — Non-DMI digital interfaced host (Host Computer Access feature) to DMI MOS host, via interworking function
  - — DMI BOS host data endpoint to DMI BOS host data endpoint, direct connection via DCP
  - — DMI BOS host data endpoint to DMI MOS host data endpoint, via interworking function.

Feature History and Development

- The DMI feature was first available for System 85 in Release 2, Version 2. This was a common channel signaling version that used the DS1 AVD signaling format.
- An improved BOS (Bit Oriented Signaling) format is introduced in System 85, Release 2, Version 4. This new format is backward compatible (via a hardware change) with Version 2 and 3 switches.

  Also in Release 2, Version 4, the DMI signaling format has been changed to include MOS (Message Oriented Signaling) for full ISDN compatibility. DMI MOS is not backward compatible with earlier systems, however, switches using the BOS format can communicate with switches using DMI MOS via the *interworking* function.

USER OPERATIONS

For data terminal users, the operation of DMI is transparent, other than the possibility of improved response times and faster cursor movement due to the higher data rate that can be used. The actions required of the data terminal users are described in the Data Call Setup feature.

With the DMI MOS version, the host can be programmed to provide ISDN route selection through the ISDN feature Call-by-Call Service Selection.

CONSIDERATIONS

For Data Terminal Users

Analog Facilities

If analog facilities are to be used, the Modem Pooling feature must be provided.

Digital Data End-Points

If the data endpoints to be connected are all digital (DCP interfaced), there are no special considerations required to implement DMI.

Hard and Soft Processor Swaps

Stable calls over DMI trunk groups endure a hard processor swap. However, calls cannot be placed over DMI trunk groups during a hard processor swap.

Differences Between Versions

There are two separate and distinct versions, DMI BOS and DMI MOS. The DMI BOS version is backward compatible with earlier editions of DMI (with hardware upgrades on the older systems). The DMI MOS version is fully compatible with the ISDN feature.

Although both versions are generally similar, they are not directly compatible with one another because of differences in the signaling form used. The *interworking* function allows either version to be used with either ISDN or standard DCP or DS1 Interface facilities. However, when interworking is involved in the call setup, some of the ISDN features and services are not available.

Both versions (DMI BOS and DMI MOS) can be supported on the same host at the same time.

INTERACTIONS WITH OTHER FEATURES

ACCUNET Service Interface

The ACCUNET Service Interface feature **is not compatible** with the DMI feature in the **BOS version**.

The ACCUNET Service Interface feature **is compatible** with the DMI feature using the **MOS version**, but only at data rates of 56 Kbps or less. If data rates of 64 Kbps are used, the ACCUNET Service Interface feature cannot be used.

Data Protection

The Data Protection feature supports DMI. Data Protection—Permanent should be assigned to the DMI ports to prevent the introduction of unwanted signals into a data channel.

ISDN (Integrated Services Digital Network) Interface

The ISDN Interface feature can be accessed by either the MOS or BOS version of DMI. However, when the DMI BOS version is used to access ISDN facilities, the interworking function is involved, and some of the ISDN features and services are not available.

Modem Pooling

The Modem Pooling feature supports connects to the DMI. If analog facilities are used, the Modem Pooling feature must be provided.

Tenant Services

DMI is a partitioned feature on System 85. Since the trunk types (108 and 109) for DMI trunk groups can be partitioned, access to these trunk groups can be dedicated to or shared by an extension partition.

HARDWARE REQUIREMENTS

The original DMI feature requires a DS1 Interface circuit pack for each T1 Carrier facility to the host. The host must be provided with a matching interface.

The following hardware is required to support the DMI BOS or DMI MOS versions (Release 2, Versions 2, 3, or 4):

- ANN-11D or ANN-11E

  These new circuit packs are used in place of the earlier ANN-11C to support the DMI BOS signaling format.

- ANN-35

  The DMI MOS interface uses the ANN-35 circuit pack to provide D (data) channel messaging and support ISDN levels 1 and 2 protocol termination. See the ISDN/PRI feature for more information on the ISDN layered protocol.

FEATURE ADMINISTRATION

The DMI feature is administered using the same MAAP (Maintenance and Administration Panel) and SMT (System Management Terminal). This feature can also be administered using CSM (Centralized System Management).

The original version of DMI is administered with the same procedures used to administer the DS1 Interface feature. The DMI MOS version is administered like the ISDN/PRI feature.

The following are the applicable MAAP and SMT procedures.

MAAP AND SMT PROCEDURES DIGITAL MULTIPLEXED INTERFACE			
PROCEDURE	**WORD**	**PURPOSE**	**SMT**
100	1	Assigns trunk group translations including trunk types and route advance patterns. A new trunk type, 120 (ISDN Dynamic Trunk), is available for ISDN use. However, DMI MOS service is not limited to this trunk type.	No
100	2	Assigns digital trunk group characteristics such as data rates. For DMI MOS trunks, the following characteristics are applicable: • Data Rate = 64 Kbps (‘‘1’’ in Field 2) • Asynchronous • Full Duplex.	No
100	3	Specifies signaling for DMI MOS trunk groups	No
101	1	Assigns trunk group translations (e.g., use of battery reversal, signaling, SMDR, etc.) and assigns DMI MOS trunk groups as AVD.	No
103	—	Assigns trunk group translations for network trunks (e.g., Data Protection, FRL, etc.). For ISDN (DMI MOS) trunk groups, the following specific encodes are required: Field 14 = ‘‘1’’ for collect all digits before outpulsing Field 15 (bearer capability) ‘‘0’’ = voice, or voice grade data ‘‘1’’ = mode 1 data ‘‘2’’ = mode 2 data ‘‘3’’ = mode 3 data.	No
108	—	Assigns the DMI MOS Terminating Test Line telephone digits.	No
116	1	Assigns trunks to DS1 Channels. For DMI MOS applications, Field 11, Interface Endpoint blocks the use of DMI MOS trunks with non-ISDN endpoints.	No

MAAP AND SMT PROCEDURES
DIGITAL MULTIPLEXED INTERFACE (Contd)

PROCEDURE	WORD	PURPOSE	SMT
260	1	Assigns DS1 circuits to equipment locations and assigns signaling requirements and transmission type. For the DMI MOS application the following specific encodes apply: • Application: Field __ = ‘‘ ’’ • Port Type: Field __ = ‘‘45’’ • Transmission Type: Field __ = ‘‘ ’’ • Bit Inversion: Field __ = ‘‘ .’’	No
262	1	Administers DMI MOS specific options such as: • Interface type • ISDN facility test type • TEI (Terminal Endpoint Identifier) • ISDN level 2 protocol parameters.	No
275	1	Assigns system class-of-service features, including Private Network Access.	Yes
275	4	Assigns additional system class of service features including ISDN active.	Yes
290	1	Displays DS1 trunk interface and SCS circuit assignments (equipment locations) and identification information. To search for ISDN (DMI MOS) specific trunk assignments, encode 25 or 26 is entered in the Port Type field.	Yes
309	1	Assigns trunk groups to ARS plans, patterns, and preferences. Identifies specific ARS routings for ISDN (DMI MOS) applications.	Yes*
309	5	Assigns ISDN parameters to ARS routings with ISDN (DMI MOS) applications. Specific parameters included are: • ISDN Dynamic trunks • Network specific facilities • Bearer capacities: Mode ‘‘0’’ voice or voice grade data Mode ‘‘1’’ data Mode ‘‘2’’ data Mode ‘‘3’’ data.	Yes*

* Display only procedure for SMT.

MAAP AND SMT PROCEDURES
DIGITAL MULTIPLEXED INTERFACE (Contd)

PROCEDURE	WORD	PURPOSE	SMT
321	1	Assigns trunk groups to AAR plans, patterns, and preferences. Identifies specific AAR routings for ISDN (DMI MOS) applications.	Yes
321	5	Source does not specifically address Word 5 but states that PROC 321 is modified in the same way as PROC 309.	Yes*
354	3	Assigns the NPA-NXX Designator for outgoing ISDN messages used with ISDN Calling Number Display.	No

* Display only procedure for SMT.

The following are the applicable CSM Command Paths utilizing the **admin** area of TCM or FM.

CSM SCREENS — MASKS DIGITAL MULTIPLEXED INTERFACE		
APPL'N	**OBJECT**	**PURPOSE**
FM	trk-grp	Assigns trunk group translations including trunk types and route advance patterns. Assigns digital trunk-group characteristics such as data rates. Specifies signaling for DMI MOS trunks. Assigns trunk-group translations (e.g., use of battery reversal, signaling, SMDR, etc.), assigns DMI MOS trunk groups as AVD, assigns trunk-group translations for network trunks (e.g., Data Protection, FRL, etc.), and assigns trunks to DS1 Channels.
FM	isdn-test-lines	Assigns the DMI MOS Terminating Test Line telephone digits.
FM	ds1-ckt-pack	Assigns DS1 circuits to equipment locations and assigns signaling requirements and transmission type.
FM	ds1-isdn	Administers DMI MOS specific options which include: Interface circuit pack parameters that permit administration of DS1 or ISDN facility test types, TEI (Terminal Endpoint Identifier), and ISDN level 2 protocol parameters.
TCM/FM	sys-cos	Assigns system class-of-service features including Private Network Access and ISDN active.
FM	ars-pattern	Assigns trunk groups to AAR and ARS plans, patterns, and preferences. Identifies and assigns specific routings for ISDN (DMI MOS) applications.
TCM	extension	Assigns the NPA-NXX Designator to an extension. ISDN services feature must be activated to access the NPA-NXX designator.
TCM	npa-nxx-designator	Creates an abbreviation to represent an NPA (area code), NXX (local exchange), and a thousands digit. This abbreviation, called the NPA-NXX designator, is assigned for outgoing ISDN messages used with ISDN Calling Number Display.

DIGITAL SERVICE (DS1) INTERFACE

DESCRIPTION

The DS1 Interface multiplexes up to 24 digitized voice or data signals onto a single carrier. This feature provides System 85 with digital connections to other System 85 switches, System 75 switches, DIMENSION System (FP8, Issue 3) switches, COs (Central Offices), or toll offices where special access arrangements are available. The DS1 feature can provide an economical alternative to analog trunking arrangements. DS1 service can replace the following types of analog facilities:

— Data Communications Access (computer access feature) facilities via the DMI (Digital Multiplexed Interface) feature

— Private network tie trunks

- CCSA (Common Control Switching Arrangement)
- DCS (Distributed Communications System)
- EPSCS (Enhanced Private Switching Communications Service)
- ETN (Electronic Tandem Network)
- Main/Satellite/Tributary Networks.

— Public network CO trunks

- Ground-start and loop-start CO trunks
- Ground-start and loop-start FX (Foreign Exchange) trunks
- Ground-start and loop-start WATS (Wide Area Telecommunications Service) trunks
- Ground-start Remote Access trunks
- Battery-reversal DID (Direct Inward Dialing) trunks.

— Off-Premises Extension trunks.

The DS1 Interface feature is also used for digital access to *remote groups*. A remote groups is a System 85 cabinet with line and trunk carriers and circuits, located away from the main switch equipment room. With DS1 service connections, the remote group can be located up to 100 miles from the System 85 main switch complex without significant degradation in service due to propagation delay. The remote group supports analog, 73-Series, 74-Series, and EIA line circuits, and GPP and EIA trunk interfaces. The Modem Pooling feature and other trunk type features are not supported by a remote group.

The T1 Carrier

The T1 carrier is a standard carrier used by the telecommunications industry for interconnecting digital systems. This high-speed, high-volume digital trunking facility is a 4-wire twisted pair metallic cable that uses the 1.544 Mbps DS1 signaling format. The DS1 format provides for synchronization, control, and maintenance. The T1 carrier is used for the DS1 24-channel signaling format to a distances of up to 100 miles.

Alternative Carriers

The DS1 Interface feature is not limited to use with the T1 carrier. Alternative carrier vehicles include Fiber Optic Links and Microwave Transmission.

Fiber Optic Links: Fiber optics provide the benefit of a wide band carrier that is virtually immune to local RF (Radio Frequency) interference. A single fiber optic carrier can support several DS1 channels. The RF immunity of this carrier is highly advantageous where a high level of RF signaling is present or high-speed data transmissions are used.

Microwave Transmission: Microwave provides a quick and easy way to support digital service in areas where right-of-way problems exist or where laying continuous physical carriers is too expensive or impossible. Microwave transmission requires line of sight between stations but can use relay stations to go around corners or over the ‘‘curve of the earth.’’ DS1 compatible microwave equipment is readily available that can support from 24 to 672 channels (the equivalent of from 1 to 28 T1 carriers).

The best carrier alternative for a given application is a matter of the economics applicable to the particular application. This can only be determined through case-by-case applications engineering.

The DS (Digital Service) Numbers

The Digital Service numbers correspond to the digital transmission rates used:

- DS0 = 64 Kbps (1 channel)
- DS1 = 1.544 Mbps (24 DS0 channels)
- DS2 = 6.312 Mbps (98 DS0 channels)
- DS3 = 44.736 Mbps (672 DS0 channels), and so on.

The DS1 Interface combines 24 DS0 signals (24 x 64 Kbps = 1.536 Mbps) with 8000 spare bits used for synchronization and control onto one carrier (i.e., a T1 carrier). When carriers are used that accommodate higher rates than DS1, adapters are used to further multiplex the output of multiple DS1 interface units onto the higher speed carrier. For example, the AT&T NDS DR23 microwave system couples the output of up to four DS1 interfaces into its microwave transmitter before broadcasting the signal in microwave form.

Channels as Trunks

With the basic DS1 Interface feature, the System 85 switch treats each DS0 channel (separate channel in the DS1 format) as a trunk circuit. Each channel is administered as a trunk and assigned to a trunk group, features, and restricted like a conventional trunk. Different trunk types can occupy different channels on the same DS1 Interface as long as the interface is set up for voice-grade service only. A DS1 Interface setup for AVD (Alternate Voice/Data) or DMI (Digital Multiplexed Interface) applications cannot be shared with other applications. Figure 44-1 shows the DS1 Interface feature used in a tie trunk arrangement.

DS1 Service Arrangements

The basic DS1 interface is set up as either voice-grade service or AVD. Voice-grade service provides 24 channels for transmitting voice and voice-band data signals. The AVD service provides 23 clear channels that can be used for voice or data communications. With AVD service, the 24th channel is used to provide signaling for the other 23 channels.

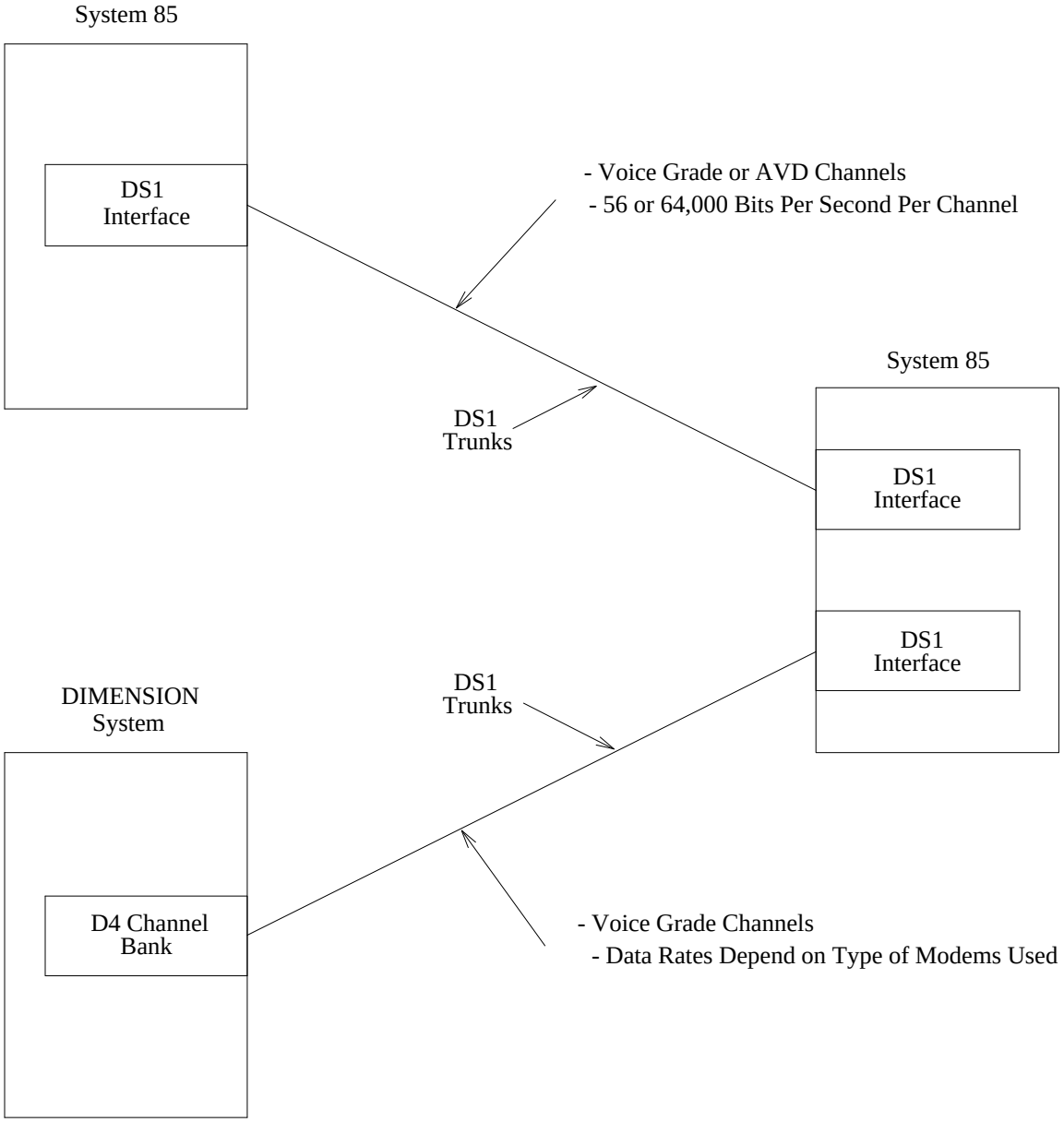

Figure 44-1. DS1 Tandem Tie Trunk Networking Arrangements

VOICE-GRADE SERVICE

The voice-grade service arrangement is used to connect a System 85 switch to other switches in a private or public networking arrangement. When the DS1 interface is set up for voice-grade service, all 24 channels carry traffic. Data communications is provided on these channels using modems. This can be done with either dedicated modems or through the Modem Pooling feature.

DIMENSION System Connections: Voice-grade DS1 service can be provided between a System 85 and an Enhanced DIMENSION System (Feature Package 8, Issue 3) switch by equipping the DIMENSION System with a D4 Channel Bank. The Enhanced DIMENSION System can support voice-grade data communications with the Modem Pooling feature. Voice-grade is the only DS1 service available to a DIMENSION System switch.

Voice-Grade Service Applications: Voice-grade DS1 service can be used for most applications that use conventional tie trunks. These applications include:

- APLT (Advanced Private Line Termination) tie trunks
- CAS (Centralized Attendant Service) arrangements
- CO (Central Office) and FX (Foreign Exchange) trunks
- DCS (Distributed Communications System) tie trunks
- ETN (Electronic Tandem Network) tandem tie trunk switch connections
- Main/Satellite arrangements
- Remote Access trunks
- RLTs (Released Link Trunks)
- WATS (Wide Area Telecommunications Service) and 800 Service trunks.

AVD (ALTERNATE VOICE/DATA) SERVICE

AVD service provides a special capability, end-to-end digital connectivity, not available from conventional analog trunks. This is particularly attractive for data calls between switches as modems are not required. AVD service provides users with access to digital facilities on other switches at higher data rates than are normally available over analog facilities. APs and host computers on other System 85 switches can be accessed as easily as those on the local switch. Modems are not needed since the data is not converted to an analog format before transmission.

Alternate use of voice and data is possible during a single call. Data call setup can be used by a voice terminal or a data terminal using the same trunk.

Trunk Routing Features

Both voice-grade and AVD service trunk groups can be included in trunk routing patterns, such as AAR (Automatic Alternate Routing), ARS (Alternate Route Selection), or Route Advance patterns. However, overflow must not be allowed between voice-grade and AVD trunk groups.

56 Kbps Clear Channel Service

This service was developed specifically to support the ACCUNET Service Interface feature but can be used between any group of switches that have an ACCUNET Service Interface capability (System 85, Release 2, Version 3 or later, or System 75, Release 1, Version 2 or later). This service combines the advantages of both the Voice Grade Service and AVD Service. It provides 24 communications channels (like Voice Grade Service) and supports high-speed (56 Kbps) data signals without the use of a conversion resource (Modem Pooling). See the ACCUNET Service Interface feature in this manual for more information on this service.

Data Preindication

In the System 85 environment, off-premises data calls, except calls made using the ACCUNET Service Interface feature (or data calls that originate on analog facilities), require the use of Data Preindication (see the Data Call Setup feature). Data preindication reserves a modem pooling conversion resource. The conversion resource is released if not needed. An example of an off-premises data call not needing a conversion resource is a DCP data call routed via DS1 AVD service to a DCP end point. A conversion resource is needed for a data call when one or more of the components of the call (end point, switch, interface unit, line, or trunk) is an analog facility (see the Modem Pooling feature).

Voice-Grade AVD Circuits

The circuits of an AVD tie trunk can be assigned for voice-grade calls, if desired. AVD voice only circuits are the equivalent of voice-grade tie trunks. When these circuits are used for voice-band data calls, Data Preindication must be used so a modem pooling conversion resource is inserted into the data transmission path.

Supporting Services and Supplemental Arrangements

SYSTEM 85 SYNCHRONIZATION SYSTEM

If the system clocks that control the end points for an AVD channel are not synchronized, slips (deletion or repetition of a portion of the data stream) can occur. Consequently, two requirements for high-speed data applications are:

a. An accurate clock or clock source

b. A method for synchronizing all the switches of the network to a common clock reference.

The System 85 Synchronization System meets these requirements for both single and multimodule systems. The main hardware component is the SCS (System Clock Synchronizer) circuit. The SCS has two modes of operation:

a. Synchronized (phase locked) to an incoming clock reference signal,

or

b. Free-running on its own internal oscillator (High Accuracy Clock).

The SCS can automatically change from one mode to the other. The clock reference signal for the SCS circuit comes from the DS1 trunk interface circuit. For a switch that terminates more than one DS1 facility, the SCS can accept two (primary and secondary) clock reference signals, monitor the performance of each reference source, and perform slip-free switching between incoming sources or from the incoming source to its own clock. If the switch has a duplicated Time Multiplexed Switch Processor or Module Processor, then the SCS must also be duplicated.

CEMs (CHANNEL EXPANSION MULTIPLEXERS)

In some instances, the 24 channels provided by a DS1 facility (i.e., a T1 carrier) may not be sufficient for all the voice and data services required between two switches. In these cases, either another DS1 facility can be added (for 24 more channels) or a CEM could be used to increase the capacity of the existing DS1 facility. The CEM provides a trade off between data rates supported and the number of channels provided by increasing the number of channels available. This is done by compressing voice-band channels appearing at the input or multiplexer side. The CEM converts the basic 64 Kbps channel into two 32 Kbps channels. Voice and voice-band data signals that operate below 4.8 Kbps can be carried on these compressed channels. High-speed data channels, operating at or above 4.8 Kbps, cannot be compressed. They require the full bandwidth of the basic DS0 channel to transmit data properly. A high-speed channel passes through the CEM untouched, using twice the space of a compressed channel. The CEM can only be used for point-to-point communications, because a CEM must be used at each end of the carrier to provide both multiplexing and demultiplexing functions (Figure 44-2).

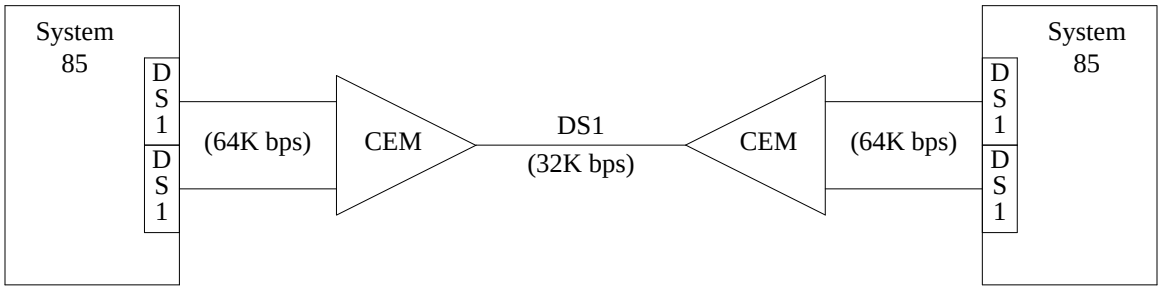

Figure 44-2. CEM (Channel Expansion Multiplexer) Configuration

Two System 85 DS1 Interfaces connect to the input (switch side) of the CEM. The output of the CEM connects to the T1 carrier. The T1 carrier then extends to the carrier side of the CEM at the other switch. With both DS1 Interfaces designated as voice-grade only, 48 compressed channels can be transmitted over one T1 carrier. When a DS1 AVD Interface is used as one input, the AVD signaling channel and each high-speed data channel require the same space as two adjacent compressed voice-grade channels. The 24 DS1 Interface channels on each CEM input can be compressed in one of two ways: VBR Signaling or 384 Kbps Bundling. VBR Signaling provides the greatest capacity with the trade off being a lower quality of transmission. This may be acceptable, but it increases the capacity by only two to four channels, depending on types of DS1 Interfaces.

VBR (Variable Bit-Robbed) Signaling Format

VBR signaling provides up to 48 channels when both DS1 Interfaces used are voice-grade only service. Voice-grade channels are encoded using 8000 samples per second, with each sample containing 4 bits. This results in a bit rate of 32 Kbps (8,000 samples per second × 4 bits per sample = 32,000 bits per second). This is half the rate of the DS0 channels, therefore 48 rather than 24 channels can be placed on a T1 carrier. When AVD interfaces are involved, the full rate (64 Kbps) data channels must be untouched, thus reducing the capacity of the carrier by two for every data channel. To coordinate the transmission of each channel to its destination at the other end, a signaling channel must be provided. This is where we get the term bit-robbed. Every sixth channel sample is robbed of a bit providing a 24 Kbps signaling channel. Every sixth voice sample is encoded using 3 bits instead of the normal 4 bits. This tends to degrade the transmission quality of the voice-band channels. If the extra capacity that VBR signaling provides (two to

four channels more than the 384 Kbps Bundling format) is worth the loss in transmission quality, then VBR signaling is a viable method of voice-band channel compression.

384 Kbps Bundling Format

The 384 Kbps Bundling format provides up to 44 compressed voice-band channels with no degradation in transmission quality. Signaling to coordinate the voice-band and data channels is provided by separate channels, so bit-robbing is not necessary. The voice-band channels of the DS1 Interface are formed into bundles of 11. One DS1 Interface channel must be used to provide CEM signaling for the bundle. This signaling channel operates in the voice-band, so it to can be compressed. Thus, each bundle requires 12 channels. This means that two 12-channel bundles can be provided for each DS1 voice-grade only interface for a possible 44 usable channels of input to the CEM. If AVD interfaces are used, one full rate, uncompressed DS1 facility channel is required for each AVD signaling channel and each full rate data channel. Thus, for each AVD interface, the number of usable channels is reduced by two (for the AVD signaling channel). Each full rate data channel further reduces the number of usable channels by two. The following illustrates this point:

- CEM Input 1—DS1 voice-grade only interface
  - Two 32 Kbps signaling channels for 384 Bundling
  - 22 usable voice-grade channels (also 32 Kbps)
- CEM Input 2—DS1 AVD interface containing one high-speed data channel
  - One 64 Kbps signaling channel for AVD
  - One 64 Kbps usable data channel
  - Two 32 Kbps signaling channels for 384 Bundling
  - 18 usable voice-grade channels (also 32 Kbps).

The result is 40 compressed voice-band channels and 1 full rate data channel.

Any combination of voice-grade and AVD DS1 Interfaces can be used between two System 85s. If both interfaces to the CEM are voice-grade, DIMENSION 600/2000 Systems with FP8, Issue 3 can be used. The CEM interfaces to a D4 Channel Bank on the DIMENSION System. The DIMENSION System is not equipped to handle the AVD interface. If full rate data channels are used, they should appear on the same AVD interface, when possible. This might save channels that would be required to provide signaling.

CHANNEL DIVISION MULTIPLEXERS (CDMs)

The CDM is used to combine dedicated (nonswitched) and switched channels on one DS1 carrier (Figure 44-3). When a DS1 carrier is only partially filled with switched voice and data channels, the CDM permits the spare channels to be reserved for dedicated point-to-point private line data connections. These channels, once through the CDM, connect directly to a host computer or terminal cluster rather than being switched through the System 85. In a sense, the CDM performs the switching. These channels operate at up to 64 Kbps.

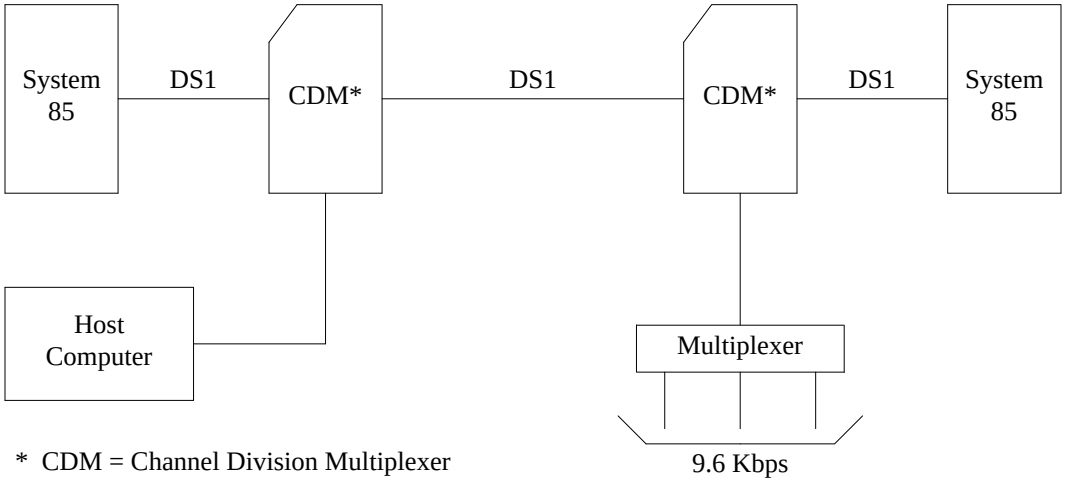

Figure 44-3. CDM Configuration

The CDM combines the partially filled DS1 Interface with any number of data ports. Each data port requires a channel on the DS1 carrier connecting the two CDMs.

DIMENSION System Application

For DIMENSION System applications, the CDM at the System 85 connects to a D4 Channel Bank. The D4 Channel Bank then routes the dedicated data ports to their destination while sending the switched voice and data channels over E&M tie trunks to the switch.

Dedicated Private Lines

The CDM can also be used to provide multipoint dedicated private lines. Figure 44-4 illustrates how this is done. Each output from a CDM is seen as a DS1 carrier. The DS1 signal contains any combination of switched voice/data channels and dedicated data port channels. This signal can be seen by another CDM as a dedicated data port input. The data terminals at Switch B and Switch C can access the host computer resident at Switch A using their own dedicated data link.

DCS Environment

CDMs can be used in a DCS environment, providing the DCS signaling information with direct access to a digital facility increases the signaling rate of the DCIU from 9.6 to 19.2 Kbps.

Mixing CDMs and CEMs

CDMs can also be used with CEMs on the same DS1 carrier to provide 24 or more point-to-point switched voice/data channels and dedicated data channels. In Figure 44-5, 40 of the possible 44 switched voice/data

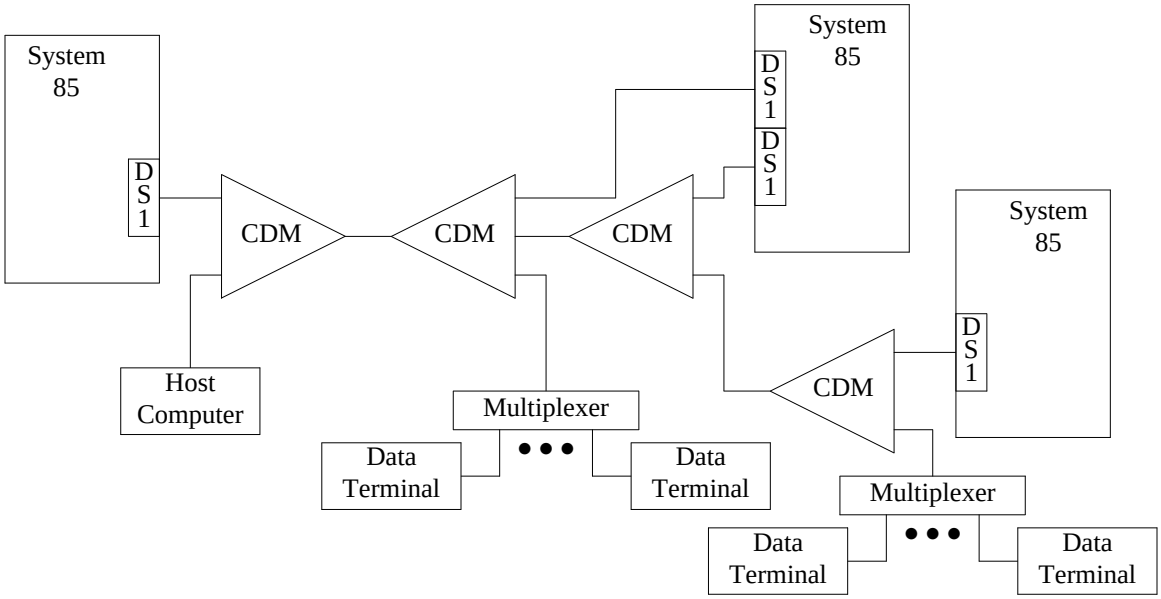

Figure 44-4. CDM Use With Multipoint Dedicated Private Lines

channels are combined onto one DS1 carrier by the CEM. The DS1 carrier output from the CEM has two full rate channels available for use by dedicated data channels. These are added at the data port inputs to the CDM.

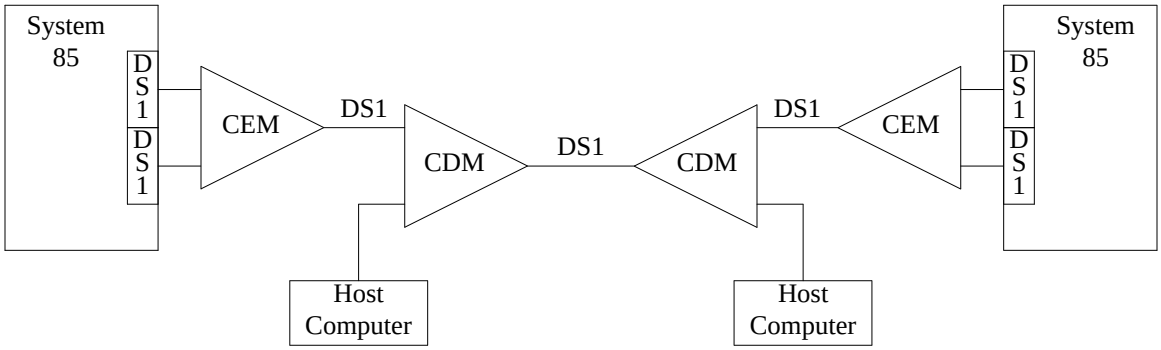

Figure 44-5. CEM/CDM Combined Use Configuration

DS1 Applications

56 Kbps Clear Channel Service: The ACCUNET Service Interface feature uses an adaptation of the DS1 Interface to provide access to and from this 56 Kbps clear channel public network service. This adaptation requires the use of a special data module (the MPDM/M1*) and a modified form of robbed-bit signaling. This application of DS1 is discussed in the ACCUNET Service Interface section of this manual.

DS1, Digital Tie Trunk Network: The DS1 Interface feature permits switched digital connections without a modem between digital facilities on two separate System 85 switches. Each DS1 channel functions as a

digital tie trunk between the two switches. Alternate Voice/Data channels provide end-to-end digital connections and avoid the need for format conversion. This reduces hardware costs and makes the full functionality of the digital switching system available to calls between separate switching nodes.

DCS (Distributed Communication Service): A DCS network can be set up using DS1 AVD trunks between the DCS nodes. Such a network provides the same transparency for data traffic that is available to voice traffic over an analog DCS network. Such a network also avoids the need for Modem Pooling on calls between DCP facilities on separate nodes. This permits the use of significantly higher data rates. If a high volume of data traffic is expected, the added cost of AVD trunks (compared to voice-grade service DS1 trunks) may be overcome by the reduced requirement for Modem Pooling conversion resources. Such a system would derive added benefits from the higher data rates available.

Digital to Analog Tie Trunk Network: The DS1 Interface can also be used between a System 85 and an Enhanced DIMENSION System. In this instance, the DIMENSION System switching node is analog so a conversion resource is required for data calls. A D4 Channel bank provides the DS1 interface at the DIMENSION System end of the digital tie trunk. The Modem Pooling feature provides the analog interface for the System 85. The conversion resources limit the data rates.

Data Features

The DS1 Interface feature is compatible with System 85 data features. Data calls using the DS1 tie trunk can use data support features such as Data Call Setup, Modem Pooling (where needed), and Host Computer Access.

Trunk Routing Features

System 85 trunk routing and support features such as AAR, ARS, Queuing, Route Advance, and call monitoring features such as SMDR, CMDR, and VFCDR are also applicable to calls using the DS1 Interface feature.

Feature History and Development

The DS1 Interface feature was first introduced with System 85 in Release 2, Version 2 with a retrofit capability for Release 2, Version 1 switches. At that time, it provided tie trunk service and special private network applications.

In Release 2, Version 3, the following improvements were introduced:

- An interface to the central office that provides connections for CO, FX, WATS, and DID trunks. These enhancements can be retrofitted to Release 2, Version 1 and 2 switches.
- Remote Access trunks and Off-Premises Stations.
- Dedicated Switched Connections.
- Remote Groups.

CONSIDERATIONS

CEM (Channel Expansion Multiplexing) and Full Rate Data

Since full rate data channels cannot be compressed without destroying the information, channel assignments in the CEM must be coordinated with the System 85 switch to ensure that only voice-band channels appear on the CEM channels designated for compression. Full rate data channels must be assigned to time slots in the incoming DS1 data stream that pass through the CEM uncompressed.

Channel—Trunk Arrangements

Channels on the same DS1 interface can be assigned to different trunk groups. Also, multiple DS1 interfaces can contribute trunks to the same trunk group. However, voice-grade service DS1 trunks and AVD service trunks cannot be assigned to the same trunk group.

Mixing Channel Types

In setting up Route Advance and AAR/ARS patterns for DS1 trunk groups, voice-grade and AVD trunk groups must not be mixed. A data call started on a voice-grade trunk group will receive a conversion resource. If a routing feature (i.e., AAR), changes the call to an AVD trunk group, the conversion resource remains in the call. The terminating switch will not recognize the need for a conversion resource because the call comes in on an AVD trunk group. A conversion resource will not be provided and the call will fail. Conversely, calls started over AVD trunk groups and switched to voice-grade trunk groups will fail because the calling switch will not provide a conversion resource and the terminating switch will insert a conversion resource. AVD trunk groups can overflow to voice-grade trunk groups only if the network does not carry data calls.

Hard and Soft Processor Swaps

Stable calls over DS1 trunk groups endure a hard processor swap. However, calls cannot be placed over DS1 trunk groups during a hard processor swap.

INTERACTIONS WITH OTHER FEATURES

The following features affect the operation of or are affected by the DS1 Interface feature.

ACCUNET Service Interface

The ACCUNET Service Interface feature uses the DS1 Interface feature as its trunking service. ACCUNET Service Interface is a specific application for the DS1 Interface feature.

Dedicated Switch Connections

The DS1 Interface circuits can be used for Dedicated Switch Connections. Each DS1 channel is associated with a software-type equipment location (i.e., no real circuit exists for each channel, but System 85 does recognize the channels separately). This equipment location can be assigned as a semipermanent connection to a terminal location or to a DS1 channel equipment location.

ISDN (Integrated Services Digital Network)/PRI (Primary Rate Interface)

The ISDN/PRI is similar in many respects to the DS1 Interface and uses an AVD (Alternate Voice/Data) type carrier circuit like that used with the DS1 Interface feature. The signaling used with these two features is, however, different in that the DS1 Interface feature uses a bit oriented signaling protocol while the ISDN/PRI feature uses message oriented signaling. These two features are separate but compatible through the interworking function. That is, traffic that originated on one type of facility can be passed to the other type at a tandeming point. However, ISDN end-to-end connectivity and ISDN features and messaging is lost when this is done.

ISN (Information Systems Network) Interface

When the DS1 Interface feature with AVD (Alternate Voice/Data) trunks or ISDN/PRI trunks are used to link System 85 locations, end-to-end digital connections between ISN stations and remote locations are possible. These arrangements do not require support from the Modem Pooling feature.

Last Number Dialed

The LND (Last Number Dialed) feature completely stores and redials the digits dialed during a DS1 call. The LND feature stores the DS1 access code and the following destination number.

Off-Premises Terminal

A single DS1 Interface can provide digital transmission facilities for up to 24 Off-Premises Terminals.

Tenant Services

The DS1 Interface is a partitioned feature on System 85. If the desired trunk type applies to DS1 service and the specific trunk group is partitioned, access to this trunk group can be dedicated to or shared by an extension partition.

Trunk Group Features

Features, such as Route Advance and Queuing, that provide more efficient access to trunk circuits can also be used for DS1 access.

RESTRICTING FEATURE USE

Because the DS1 Interface appears as a trunk to the system, any restriction that can be applied to a trunk or to trunk access can be applied to DS1 trunks.

HARDWARE REQUIREMENTS

The hardware required to support the DS1 Interface feature includes the following:

- DS1/73 Series Port Carrier

  The DS1/73 Series Port Carrier is designed specifically to accommodate the circuit boards used for DS1 Interfaces as well as 73 Series standard line and trunk circuit boards. Each carrier supports two boards.

- ANN-11C or ANN-11E, DS1 Interface Circuit

  The DS1 Interface Circuit (ANN-11) is a single circuit pack that supports the full 24-channel interface for the T1 carrier. It provides both the multiplexer and demultiplexer function. The ANN-11B is used with previous releases of System 85 (R2 V1 and R2 V2) to provide voice-grade and AVD tie trunk circuits and supports DMI. The ANN-11C provides these functions and also provides the interface to the CO and Dedicated Switched Connections. The ANN-11C is used to replace three SN228 circuit packs for the Off-Premises Terminal arrangement.

- TN380C, Module Processor

  The TN380C (Module Processor) must be used in place of the TN-380B for all Release 2, Version 3 systems. It can optionally be used with earlier models (R1, R2 V1, and R2 V2 systems). There cannot be a mix of TN380Bs and TN380Cs in a duplicated module. There can, however, be TN380Bs in one module and TN380Cs in another module within the same system. The TN380C provides the same functionality as the TN380B and also provides control signaling for Dedicated Switched Connections, control of Remote Groups, and control for DS1 CO interface circuits.

- TN463 SCS (System Clock Synchronizer)

  For high-speed data applications, each switch requires an SCS (System Clock Synchronizer) circuit (TN463). In a single-module system, the SCS resides in the module control carrier. In a multimodule system, the SCS resides in the TMS control carrier.

- D4 Channel Bank

  If an analog switch (DIMENSION System) is used in the DS1 networking arrangement, a D4 channel bank is required at the analog node. If data communications are to be carried over these trunks, Modem Pooling is required at each participating System 85.

- DDS Data Port Adapter

  For CDM applications involving DIMENSION Systems, the DS1 carrier terminates on the DIMENSION System via a D4 Channel Bank to provide a DDS compatible data link. In this instance, a DDS data port adapter for the CDM is required. The adapter allows an Office Channel Unit (OCU) to interface with the CDM, providing compatibility with the OCU in the D4 Channel Bank. The data ports are limited to 56 Kbps.

Optional Hardware

Two hardware options increase the functionality of the DS1 interface:

- The CDM (Channel Division Multiplexer)
- The CEM (Channel Expansion Multiplexer).

These units were first available with Release 2, System 85 and the DIMENSION Systems. The CDM enables the customer with DS1 applications where the switched voice and voice-band data requirements are less than 24 channels to use the extra channels for nonswitched (dedicated point-to-point) data transmission. Because the CDM is compatible with the D4 channel bank, a connection between a System 85 and a DIMENSION System is also possible. The CDM supports both bit robbed and common channel signaling and provides the following interfaces to the DS1 trunk facility.

- 4-wire E&M (analog tie trunks)
- RS-232C or RS-422 (0 to 19.2 Kbps asynchronous data)

- RS-449 or V.35 (56 Kbps asynchronous data)
- RS-449 or V.35 (64 Kbps wide band data)
- Digital Data System Dataport Adapter (2.4, 4.8, 9.6, or 56 Kbps).

For the 4-wire E&M interface, the CDM accepts an analog input signal and converts it to the digital format the DS1 trunk facility requires. This option is a cost effective alternative for the DS1 customer who needs only a few voice channels. The CDM can also provide channel bank functionality, host computer to host computer connections for high-speed dedicated data transmission, and DCIU to DCIU connections for DCS (Distributed Communications System) applications.

The CEM compresses two DS1 signals, each with up to twenty-four 64 Kbps channels, into one DS1 signal containing up to forty-eight 32 Kbps channels. Only voice and voice-band data (up to 4.8 Kbps) can be compressed, but 64 Kbps channels of uncompressed data (this includes AVD channels) can be carried on the same DS1 trunk facility with compressed channels. Video and 5-, 8-, and 15-Khz program audio signals can also be carried at their normal bit rates without compression. Because a CEM must be provided at both ends of the DS1 facility, it can only be used for a point-to-point or tandem network configuration. The CEM is compatible with either bit robbed or common channel signaling.

A hardware option provides a 384 Kbps Bundling signaling format for the CEM. This format uses one channel out of every 12-channel bundle to carry signaling information for the rest of the bundle, thus reducing the capacity of the CEM to 44 channels. However, these channels have an enhanced performance level over the normal in-band signaling format which may cause signal degradation when voice-band data calls tandem through one or more intermediate switches.

FEATURE ADMINISTRATION

The DS1 Interface feature is installed on a per-system basis. Administration within the system is on a per trunk group basis.

Administration is performed using the MAAP (Maintenance and Administration Panel). The customer can partially administer this feature using the SMT (System Management Terminal) or the TCM (Terminal Change Management) feature. The DS1 Interface feature can also be administered using CSM (Centralized System Management).

The following are the applicable MAAP and SMT procedures.

MAAP AND SMT PROCEDURES — DIGITAL SERVICE (DS1) INTERFACE			
PROCEDURE	**WORD**	**PURPOSE**	**SMT**
000	1	Assigns voice terminal (line assignments) to DS1 ports and disables signaling for DSC applications.	Yes
100	1	Assigns trunk group dial access code, trunk type, route advance, dial access restriction.	No
100	2	Assigns the data rates, synchronization, duplex.	No
101	1	Assigns trunk group translations (e.g., use of battery reversal, signaling, SMDR) and assigns a trunk group as AVD (tie and OPX only).	No
103	—	Assign trunk group translations for network trunks (e.g., Data Protection, FRL, Bridge-On).	Yes
116	1	Assigns trunks to a DS1 Channel, disable signaling for DSC administered channels (ones that use robbed bit signaling.).	No
116	2	Assigns Off-Premises Terminals to DS1 line ports.	No
150	1	Assigns trunk circuits to trunk groups.	No
250	—	Assigns the SCS circuit to either the Module Control Carrier (single module system) or the Time Multiplexed Switch Carrier (multimodule system).	No
260	1	Assigns DS1 circuits to equipment locations and assigns signaling requirements.	No
290	1 & 2	Displays DS1 trunk interface and SCS circuit assignments (equipment locations) and identification information.	Yes

The following is the applicable TCM path name used with the AP 16.

TCM SCREEN — DIGITAL SERVICE (DS1) INTERFACE	
PATH NAME	**PURPOSE**
terminal-change terminal equipment	Assigns an extension number to the DS1 Interface. The DS1 Interface must first be assigned to an equipment location by the installer.

The following are the applicable CSM Command Paths utilizing the **admin** area of TCM or FM.

CSM SCREENS — MASKS DIGITAL SERVICE (DS1) INTERFACE		
APPL'N	**OBJECT**	**PURPOSE**
TCM	extension	Assigns voice terminals (line assignments) to DS1 ports and disables signaling for DSC applications.
FM	trk-grp	This command provides for the following administration: 1. Assigns trunk group dial access code, trunk type, route advance, and dial access restriction. 2. Assigns the data rates, synchronization, and duplex. 3. Assigns trunk group translations (e.g., use of battery reversal, signaling, SMDR) and assigns a trunk group as AVD (tie and OPX only). 4. Assigns trunk group translations for network trunks (e.g., Data Protection, FRL, Bridge-On). 5. Assigns trunks to a DS1 Channel and disables signaling for DSC administered channels (ones that use robbed-bit signaling). 6. Assigns Off-Premises Terminals to DS1 line ports. 7. Assigns trunk circuits to trunk groups.
FM	ds1-ckt-pack	Assigns the SCS circuit to either the Module Control Carrier (single module system) or the Time Multiplexed Switch Carrier (multimodule system). Assigns DS1 circuits to equipment locations and assigns signaling requirements.

DIRECT DEPARTMENT CALLING

DESCRIPTION

The DDC (Direct Department Calling) feature provides an economical alternative to DID (Direct Inward Dialing) for departments that receive a high volume of incoming calls. Selected terminal users can be organized into a group and accessed by a listed directory number.

> **NOTE:** The DDC feature is only available through Release 2, Version 1. This feature was replaced and enhanced by the EUCD feature in Release 2, Version 2. The EUCD feature provides DDC functionality using the direct hunting option. The following feature description is meant to serve as a reference source for those using the earlier software packages.

A listed directory number links to a DDC group by associating the listed directory number with the extension number of the first terminal in the group. The controlling or primary terminal for the group is the first terminal providing control functions, such as call forwarding for the group.

The switch directs incoming calls for the listed directory number to a group queue. A linear hunt routine extends the queued calls to the first idle terminal. The hunt routine checks the controlling terminal first. If the controlling terminal is busy, the sequence checks the next terminal, etc. If all terminals are busy, the call remains in queue, and the hunt routine runs again in 2 seconds.

This feature reduces call-completion time and eliminates the need for attendant help on incoming calls. Calls to a DDC group can be via DID, non-DID, private switched network, dial repeating or automatic tie trunks, and from local terminals or attendant extended. All calls to the group extension, other than attendant originated, are initially directed to the queue associated with the group.

Each terminal (including the controlling terminal) in a DDC group can receive calls either as a group member or as an individual terminal. For calls within the switch, a unique group extension number (an associated extension number) identifies the group. For incoming calls, the type of trunk identifies the DDC group. For automatic incoming type trunks, the call routes to the assigned DDC group. For dial repeating type trunks, the call routes to the group dialed. This is similar to the way DID calls complete to individual terminals (including individual members of a DDC group).

When there is a delay in completing the call, an optional recorded announcement informs the calling party of the delay.

An individual group member can make his/her terminal available or unavailable for group calls. The controlling terminal can make the entire group unavailable for group calls.

Each voice terminal in a group is assigned a unique extension number. Calls to these extension numbers are serviced as normal voice terminal calls. Therefore, it is possible to call any individual group member directly.

Recorded Announcement

When there is a delay in completing a call, an optional recorded announcement informs the calling party of the delay.

This delay announcement can be repeated (Procedure 275, Word 4). When repeated, the calling party hears silence between cycles on the announcement machine.

Feature History and Development

This feature was first available on System 85 in Release 1. This feature was replaced in Release 2, Version 2 by the EUCD feature.

> **NOTE:** Refer to Appendix B for a tabular comparison of the various call distributors provided in System 85, Release 2.

USER OPERATIONS

The following are the user operating procedures for this feature.

To Busy-Out an Individual Group Member:

- Go off-hook. [Dial tone]
- Dial the DDC Terminal Busy access code. [Confirmation tone]
- Go on-hook.

To Busy-Out an Entire Group From the Controlling Terminal:

- Go off-hook. [Dial tone]
- Dial the DDC Group Busy access code. [Confirmation tone]
- Go on-hook.

CONSIDERATIONS

Group Limits

If the switch uses DDC *and* UCD (Uniform Call Distribution), the memory size of the switch and call traffic requirements determine the number of combined groups and voice terminals per group. The switch provides up to 28 groups with a maximum of 40 voice terminals per group. An extension number cannot belong to both a DDC and a UCD group; the groups are mutually exclusive.

Stop Hunt Option

A stop hunt option is available to group members. This options prevents calls forwarded to an individual extension from hunting.

Status Indicators

Status indicator lamps are available as queue warning level, trunk status, or system reload indicators. These units can be desk or wall mounted.

Queue Warning Lamp: A queue warning level lamp lights when the number of calls waiting in queue to be answered exceeds a preset warning level between 1 and 31.

Trunk Status Lamps: As many as 128 status lamps can be provided with the switch to display the status of trunks terminating to UCD or DDC groups. Each status lamp shows three separate trunk states: busy (lamp on), idle (lamp off), and alerting (fluttering lamp).

Automatic Reload Indicator: After a power interruption, an automatic reloading of switch translations from the tape into memory occurs. When this happens, the system reload indicator lights.

Effect of Automatic Reloading

When an automatic (or manual) reload occurs, all group members are unavailable for group calls. Each group member must dial the DDC terminal idle access code in order to receive group calls.

Shared Recorded Announcement

If the recorded announcement is provided and there is more than one UCD or DDC group assigned in the switch, all groups use the same recorded announcement.

When the 13A announcement set is used, the Intercept Treatment feature Recorded Announcement option and the delay recorded announcement for DDC can use separate channels on the same announcement machine.

INTERACTIONS WITH OTHER FEATURES

The following System 85 features affect or are affected by the operation of this feature.

Attendant Call Waiting

An attendant call to a DDC group does not queue. The switch attempts to complete the call ahead of any calls that may be in queue. If no idle line is found in the group, the call waits on the controlling terminal if Attendant Call Waiting is provided. However, when an attendant places a call to a DDC individual terminal and that terminal is busy, the call waits on the busy individual terminal if Attendant Call Waiting is provided.

Automatic Callback

Any DDC group member can use the Automatic Callback feature. When Automatic Callback is activated toward a DDC group number, callback occurs only when the DDC controlling terminal and calling terminal become idle.

Busy Verification of Lines

The attendant can use the Busy Verification of Lines feature to check the busy/idle condition of a terminal in a DDC group. However, this feature cannot check for a line ‘‘made busy’’ to group calls. When Busy Verification of Lines is activated toward a DDC group number, only the controlling terminal line is verified (no hunting takes place).

Call Coverage

Coverage cannot be assigned to an associated extension number of a DDC group. However, the switch allows the assignment of coverage to individual extensions of group members for calls addressed directly to that extension.

The switch cannot redirect a call to coverage after the DDC feature has distributed the call to a group member. Therefore, the DDC group must be assigned as the final point in the coverage path. When assigning a DDC group as the final point in a coverage path, the group number is the assigned coverage point.

CDRR (Call Detail Recording and Reporting)

On a DDC call, the trunk identification number is recorded as the calling number. If the call is completed to an outgoing trunk, the dialed digits are recorded as the dialed number. If the call is to a voice terminal, the extension number is recorded as the dialed number.

CMDR (Centralized Message Detail Recording)

Same as the CDRR interaction.

Call Forwarding—Follow Me

Call Forwarding—Follow Me, when activated for a DDC group, routes all DDC calls to a designated terminal, the attendant queue, the centralized attendant queue, or to another UCD or DDC group's queue immediately after dialing. If a call is already queued when this feature is activated, the call remains in queue for 7 seconds before forwarding.

a. Only the controlling terminal or attendant can activate or deactivate Call Forwarding—Follow Me for a DDC group. Noncontrolling group terminals cannot activate or cancel Call Forwarding—Follow Me even if authorized by their line class of service.

b. Only calls to the DDC group number forward when Call Forwarding—Follow Me is active. Calls to an individual terminal or the controlling terminal number do not forward.

c. The stop hunt option should be provided in the line class of service for each DDC group extension. Otherwise, a call forwarded to an individual DDC member's extension is treated as a call to the DDC group (hunting is used).

Call Waiting

When Call Waiting is assigned to an individual DDC group terminal, calls to the terminal are allowed to wait if the called terminal line is busy. The group terminal user can be connected to the waiting call by going on-hook; whereby the terminal is alerted and connected to the call upon answer. These calls have preference over DDC calls in queue waiting to be answered. Do not assign this feature to the controlling

extension number of a DDC group.

DCS (Distributed Communications System)

In a DCS environment, direct attendant calls and attendant extended calls to another node are queued. However, for attendant extended calls, the attendant does not receive confirmation tone to indicate that the queue has been entered.

Main/Satellite/Tributary

Extension numbers that use extension number steering cannot be the controlling extension for a DDC group.

Priority Calling

When activating Priority Calling toward an individual DDC group terminal, the call waits on that terminal. When activating Priority Calling toward a DDC group number, the call always waits on the controlling terminal (the call does not enter the group queue).

Restriction—Attendant Control of Voice Terminals

If any Attendant Control of Voice Terminals restriction (Outward, Terminal-to-Terminal Only Calling, Termination, or Total) is assigned to a DDC controlling terminal or a DDC group extension, then the restriction assigned is applied to the entire DDC group.

SMDR (Station Message Detail Recording)

Same as the CDRR interaction.

RESTRICTING FEATURE USE

Performing the busy-out procedure removes the group member from the DDC group.

The controlling terminal can make the entire group unavailable for DDC calls by dialing an access code.

An attendant can restrict access to a DDC group by activating Controlled Termination Restriction for the group number.

HARDWARE REQUIREMENTS

The DDC feature requires the following additional or special hardware.

- 30A8 system status indicator panel to display the queue warning status for eight DDC groups
- SN241 contact interface (eight circuits per SN241)
- SN231 auxiliary trunk for delay recorded announcement (four circuits per SN231)
- 13A announcement set to provide the recorded announcement (only one channel can be used for UCD/DDC) **or** KS-65270 digital announcer to provide the recorded announcement (single-channel announcement set).

FEATURE ADMINISTRATION

Assignment of the DDC feature is on a per-trunk group basis and on a line class-of-service basis.

The customer can partially administer this feature using the SMT (System Management Terminal) or the TCM (Terminal Change Management) feature. This feature can also be administered using CSM (Centralized System Management).

The following are the applicable MAAP and SMT procedures.

MAAP AND SMT PROCEDURES — DIRECT DEPARTMENT CALLING			
PROCEDURE	**WORD**	**PURPOSE**	**SMT**
000	1	Administers the equipment location and class of service of each member's extension.	Yes
000	2	Assigns hunt-to assignments to each member's extension number.	Yes
001	—	Assigns associated extension number(s) to the primary extension.	Yes
010	1	Assigns UCD/DDC membership to a voice terminal class of service and the stop hunt option to a UCD/DDC member's class of service.	Yes
025	1	Administers the characteristics of a UCD/DDC group.	Yes
025	4	Administers UCD/DDC trunk indicator lamps.	Yes
100	1	Administers the trunk type and trunk-group assignments for UCD delay recorded announcement trunk, contact interface trunk, and queuing trunk group.	No
115	—	Assigns the UCD/DDC group terminations to incoming trunk groups.	No
150	—	Assigns the SN231 equipment location of a delay recorded announcement trunk to its trunk-group number.	No
155	—	Assign the SN241 equipment location of a contact interface trunk to its trunk-group number.	No
204	1	Designates the desired alphanumeric display for UCD/DDC calls that reach an attendant.	No
275	4	Assigns the UCD/DDC delay recorded announcement to the system class of service.	Yes
350	1	Assigns the first digit of the feature dial access codes and extension number groups (if required).	No
350	2	Assigns the feature dial access codes. The applicable encodes are as follows: 51 UCD/DDC terminal busy 52 UCD/DDC terminal idle 54 UCD/DDC lamp test 58 UCD/DDC group busy 59 UCD/DDC group unbusy 70 UCD/DDC status toggle.	No
354	1	Administers groups of extension numbers.	No

The following are the applicable TCM path names used with the AP 16.

TCM SCREENS — DIRECT DEPARTMENT CALLING	
PATH NAME	**PURPOSE**
terminal-change terminal display-unit	Displays or prints the group members being monitored by a 106B display unit.
terminal-change class-of-service attributes	Assigns UCD/DDC membership to a voice terminal class of service and assigns the stop-hunt option to a UCD/DDC member's class of service.
terminal-change extensions attributes	Assigns the voice terminal class of service to an extension number, administers the associated extension numbers to the primary extension, and administers the hunt-to assignment to an extension.
terminal-change group call-distribution attributes	Administers the characteristics of a DDC group. Assigns ''terminal'' to the type-of-hunting field.
terminal-change group call-distribution members	Adds or removes members to/from a DDC group.

The following are the applicable CSM Command Paths utilizing the **admin** area of TCM or FM.

CSM SCREENS — MASKS DIRECT DEPARTMENT CALLING		
APPL'N	**OBJECT**	**PURPOSE**
TCM	extension	Administers the equipment location and class of service of each member's extension. Assigns hunt-to assignments to each member's extension number.
TCM	associated-extension	Associates an extension with an existing primary extension, and also assigns a name display to the associated extension.
TCM	class-of-service	Assigns UCD/DDC membership to a voice terminal class of service and the stop-hunt option to a UCD/DDC member's class of service.
TCM/FM	ucd-grp	Administers the characteristics and the trunk indicator lamps of a UCD/DDC group.
FM	trk-grp	Administers the trunk type and trunk-group assignments for the UCD delay recorded announcement trunk, contact interface trunk, and queuing trunk group. Assigns the SN231 equipment location of a delay recorded announcement trunk, and the SN241 equipment location of a contact interface trunk to their respective trunk-group numbers.
FM	term-trk-grp	Assigns incoming trunk groups to terminate at the UCD/DDC group(s).
TCM	console-messages	Designates the desired alphanumeric display for UCD/DDC calls that reach the attendant(s).
TCM/FM	sys-cos	Assigns the UCD/DDC delay recorded announcement to the system class of service.
TCM/FM	first-digit	Assigns the first digit of the feature dial access codes and extension number groups (if required).
TCM/FM	dial-access-code	Adds, changes, and/or removes the feature dial access codes. (System 85 R2 V4) The dial access code can be up to four digits long.
TCM/FM	number-groups	Administers one or more extension number groups.

DIRECT INWARD DIALING

DESCRIPTION

This feature allows calls from the public network to connect to the dialed extension without attendant assistance. The DID (Direct Inward Dialing) feature can be used to access data stations, local attendants, Centralized Attendant Service attendants, and voice terminals at remote locations without attendant assistance. Extension number steering is used to access terminals at remote locations.

Feature History and Development

This feature was first available in System 85 with Release 1 and has remained unchanged since its introduction.

USER OPERATIONS

This feature provides external access to System 85 stations. There are no System 85 user operations.

CONSIDERATIONS

Hard and Soft Processor Swaps

Stable calls from over DID trunk groups endure a hard processor swap. However, calls cannot be received over DID trunk groups during a hard processor swap.

INTERACTIONS WITH OTHER FEATURES

The following System 85 features affect or are affected by the operation of this feature.

Bridged Call

The DID Restriction is assigned to a class of service in Procedure 010, Word 3. The class of service is then assigned to an extension in Procedure 000, Word 1. When the DID Restriction is assigned to a *shared extension*, the restriction applies to every image of the extension.

Call Vectoring

If the DID restriction is assigned to a VDN's class of service, this restriction *is not applied* to the VDN's vector processing. Even if this restriction is assigned to the class of service, DID calls are allowed to terminate to the vector.

CMDR (Centralized Message Detail Recording)

A DID caller attempting to place a call on a tandem switching basis through the switch cannot input the account code. If the call uses attendant assistance, the attendant can input the account code before extending the call.

Data Call Setup

A DID data call can be placed to a DCP interfaced system data station if Modem Pooling is available.

Foreign Exchange Access

Using incoming (or 2-way) FX trunks, the DID feature can be used by a caller in the FX CO service area to reach a specific station on the System 85 switch.

ISN (Information Systems Network) Interface

When an off-net voice terminal is used to set up a data call to the ISN Interface, stage one dialing can be performed from the voice terminal (i.e., the ISN Interface access code); however, stage two dialing must use keyboard dialing (i.e., dialing the ISN endpoint).

Modem Pooling

Modem pooling is required if DID calls are to be placed to a DCP interfaced System 85 data station.

Power Failure Transfer

A DID call cannot be received or used during the power failure transfer mode of operation.

Remote Access

When the switch is in the day mode and Remote Access is sharing LDN service, calls via the remote access number route to the attendant.

SMDR (Station Message Detail Recording)

Same as the CMDR interaction.

Tenant Services

A DID (Direct Inward Dialing) trunk group can be dedicated to a specific extension partition or attendant partition. When this is done, the switch manager should accurately convey the numbering plan (within the partition that is associated with the trunk group) to the serving CO (Central Office) so that calls from the public network can be routed properly.

> **NOTE:** Using this method, if any DID calls are improperly routed to the wrong partition, the switch will return intercept treatment (reorder tone by default) to the calling party.

To minimize the consumption of DID trunk groups in a partitioned System 85, the partitioning of DID trunks can also be set up at the serving CO. Under this arrangement, numerous small DID trunk groups at the CO can be administered *to converge to* a single large DID trunk group (containing as many as 255 discrete trunks) at the partitioned System 85. This large DID trunk group is assigned to Partition 0 and is shared by various partitions. When this is done, the system manager should coordinate the arrangement with the serving CO so that calls from the public network are properly partitioned.

> **NOTE:** With this type of trunking configuration, the System 85 has no knowledge of the partitioning arrangement at the serving CO. So, if any DID calls are improperly routed out of the serving CO, the System 85 would usually allow the call.

Variable Format Call Detail Recording

The DID calling party cannot dial an account code. If the call is to the attendant, the attendant can dial the account code before extending the call. All DID calls will be recorded, if recording is activated for the DID trunk group.

WATS Access

Using incoming (or 2-way) WATS trunks, the DID feature can be used by a caller in the 800 Service area to reach a specific station on the System 85 switch.

RESTRICTING FEATURE USE

The DID restriction (Procedure 010, Word 3, Field 14) can be used to deny DID access to specific terminals through their class-of-service. This also prevents these terminals from receiving private network inward dialed calls.

An attendant can temporarily restrict selected stations from receiving DID calls with the Restriction—Attendant Control of Voice Terminals feature.

HARDWARE REQUIREMENTS

The Direct Inward Dialing feature requires the following additional or special hardware.

- Every DID trunk requires one circuit of an SN232 circuit pack (four circuits per SN232).

FEATURE ADMINISTRATION

Assignment of the DID feature is on a per-system basis.

The customer can partially administer this feature using the SMT (System Management Terminal). This feature can also be administered using CSM (Centralized System Management).

The following are the applicable MAAP and SMT procedures.

MAAP AND SMT PROCEDURES — DIRECT INWARD DIALING

PROCEDURE	WORD	PURPOSE	SMT
100	1	Assigns the dial access code and trunk type of a DID trunk group.	No
101	—	Administers trunk-group characteristics for trunk groups administered in Procedure 100, Word 1.	No
150	—	Assigns the SN232 equipment location of a DID trunk to its trunk-group number.	No
275	1	Specifies the amount of dial digits forwarded to the switch by the serving CO (Central Office).	Yes
289	1	Administers the desired type of Intercept Treatment for calls from the public network.	Yes
350	1	Assigns the first digit of the trunk-group dial access codes (if required).	No

The following are the applicable CSM Command Paths utilizing the **admin** area of TCM or FM.

CSM SCREENS — MASKS DIRECT INWARD DIALING		
APPL'N	**OBJECT**	**PURPOSE**
FM	trk-grp	Assigns the dial access code and trunk type of a DID trunk group, administers trunk-group characteristics, and assigns the SN232 equipment location to its trunk-group number.
TCM/FM	sys-cos	Specifies the amount of dial digits forwarded to the system by the serving CO (Central Office).
FM	intercept	Programs the specific type of intercept treatment (reorder tone by default) for calls from the public network.
TCM/FM	first-digit	Assigns the first digit of the trunk-group dial access code (if required).

DIRECT OUTWARD DIALING

DESCRIPTION

This feature allows a System 85 terminal user to access the public network without attendant assistance. Direct access to the public network is rapid and efficient for terminal users and reduces the attendant's work load.

Feature History and Development

This feature was first available in System 85 with R1 and has remained unchanged since its introduction.

USER OPERATIONS

The following are the user operating procedures for this feature.

To Place a Direct Outward Dialed Call

- Go off-hook. [Dial tone]
- Dial a Direct Outward Dialing trunk-group access code. [Second dial tone]
- Dial the desired public network number. [Call-progress tone]

CONSIDERATIONS

Access Code

The DOD access code can be from one to three digits. The single digit ''9'' is most frequently used for this access code.

Feature Availability

Availability of this feature is determined by the number of outgoing public network type trunks available on the switch. Access can also be a function of other features, such as class-of-service and Facility Restriction Level, for the extension from which a DOD call is made.

Hard and Soft Processor Swaps

Stable calls over DOD trunk groups endure a hard processor swap. However, calls cannot be placed over DOD trunk groups during a hard processor swap.

INTERACTIONS WITH OTHER FEATURES

The following System 85 feature affects or is affected by the operation of this feature.

Data Call Setup

Data calls can be established using DOD if the Modem Pooling feature is also available.

Foreign Exchange Access

Using outgoing (or 2-way) FX trunks, the DOD feature is used by System 85 users to call stations served by the FX CO over FX Access trunks.

Modem Pooling

The Modem Pooling feature is used with DOD to place data calls to remote data stations over the public network.

Tenant Services

A voice terminal user in a partitioned switch is allowed to place calls outside the switch using a DOD trunk group that is either dedicated to or shared by the user's extension partition. If the user's extension partition is not allowed to use the dialed trunk group, and if the switch cannot select an allowable alternate trunk group from the Route Advance list (if provided), the switch returns intercept treatment to the calling party.

WATS Access

Using outgoing (or 2-way) WATS trunks, the DOD feature is used by System 85 users to call stations in the WATS Access service area over WATS Access trunks.

RESTRICTING FEATURE USE

The attendant can use the following features to prevent a terminal user from accessing DOD:

- Attendant Control of Trunk Group Access
- Attendant Control of Voice Terminals.

To prevent a terminal user from accessing DOD, use the following restrictions.

- Terminal-to-Terminal Only Calling
- Origination restriction
- Outward restriction
- Miscellaneous Trunk restriction
- Code restriction
- Toll restriction.

HARDWARE REQUIREMENTS

The Direct Outward Dialing feature requires the following additional or special hardware.

- Every DOD trunk requires one circuit of an SN230 circuit pack (four circuits per SN230).

FEATURE ADMINISTRATION

Assignment of the DOD feature is on a per-system basis.

The customer can partially administer this feature using the SMT (System Management Terminal) or the TCM (Terminal Change Management) feature. This feature can also be administered using CSM (Centralized System Management).

The following are the applicable MAAP and SMT procedures.

MAAP AND SMT PROCEDURES — DIRECT OUTWARD DIALING			
PROCEDURE	**WORD**	**PURPOSE**	**SMT**
000	1	Assigns the class of service to an extension number.	Yes
010	1	Assigns a Miscellaneous Trunk Restrictions group to a voice terminal class of service.	Yes
100	1	Assigns the dial access code and trunk type for a DOD trunk group. Route Advance is also administered as required.	No
101	—	Administers the characteristics of a DOD trunk group.	No
102	—	Assigns the trunk group (using the dial access code) to Miscellaneous Trunk Restriction Groups.	Yes
150	—	Assigns the equipment location for the SN230 circuit pack to the trunk group number.	No
202	1	Assigns the desired Direct Trunk Group Selection buttons with busy and warning levels to the attendant console(s).	No
289	1	Administers the desired type of Intercept Treatment for internal calls.	Yes
350	1	Assigns the first digit of the trunk-group dial access codes (if required).	No

The following are the applicable TCM path names used with the AP 16.

TCM SCREENS — DIRECT OUTWARD DIALING	
PATH NAME	**PURPOSE**
terminal-change class-of-service attributes	Assigns a Miscellaneous Trunk Group to a voice terminal class of service.
terminal-change extensions attributes	Assigns the class of service to an extension number.

The following are the applicable CSM Command Paths utilizing the **admin** area of TCM or FM.

CSM SCREENS — MASKS DIRECT OUTWARD DIALING		
APPL'N	**OBJECT**	**PURPOSE**
TCM	extension	Assigns the class of service to an extension number.
TCM	class-of-service	Assigns a Miscellaneous Trunk Group Restrictions group to a voice terminal class of service.
FM	trk-grp	Assigns the dial access code and trunk type for a DOD trunk group. Administers the characteristics of the trunk group and assigns the equipment location of the circuit pack for the trunk group. Administers Route Advance (if required).
FM	misc-trk-rst-grp	Assigns the dial access code of the trunk group to Miscellaneous Trunk Restriction groups (if required).
TCM	direct-trk-grp-keys	Assigns the desired Direct Trunk Group Selection buttons with busy and warning levels to the attendant console.
FM	intercept	Administers the desired type of Intercept Treatment for internal calls.
TCM/FM	first-digit	Assigns the first digit of the trunk group dial access code (if required). Changes the number of digits and/or call type (extension or trunk/feature dial access code) associated with the first dialed digit.

DISPLAY—VOICE TERMINAL

DESCRIPTION

This feature makes call and message information available to voice terminal users who have a terminal with display capabilities (see Figure 48-1). This information can come from the AUDIX (Audio Information Exchange) feature, LWC (Leave Word Calling) feature, or the MCS (Message Center Service) feature.

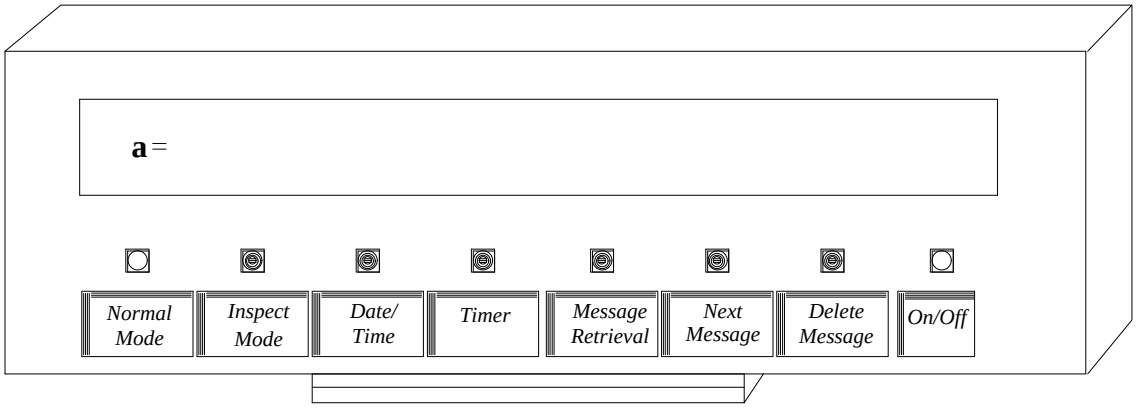

Figure 48-1. 40-Character D401A Display Module and Typical Button Assignments

The user can select five modes using mode access buttons:

- Normal Mode

  Provides call-related information for the call currently in progress on the user's terminal (active appearance). Information such as calling or called party identification and calling or called number is displayed. On an internal incoming call, the calling party's name is displayed while ringing.

- Inspect Mode

  Permits the user to display information for an appearance other than the current call in progress on the user's terminal. This mode is not normally used with the AT&T Personal Terminal 510D; the inspect function is provided separately on the PHONE screen.

- Message Retrieval Mode

  Accesses (or retrieves) messages for extension numbers having an appearance on the user's terminal.

- Coverage Message Retrieval Mode

  Allows a covering user to access (or retrieve) a principal's messages.

- Time of Day and Date Mode

  Allows the user to display the time of day, day of the week, and the date.

In addition to the five modes, the user can use five mode related functions with designated function buttons. The five functions are:

- Next Message

  Used with the two Message Retrieval modes to step from one message to the next.

- Scroll

  Used with the two Message Retrieval modes to view subsequent segments of messages that consist of more than 40 characters. This function is available only on Release 2, Version 3 and later switches.

- Delete Message

  Used with Message Retrieval mode to delete messages.

- Return Call

  Used with the two Message Retrieval modes to place a call to the party identified by the currently displayed message (for internal calls only).

- Elapsed Time

  Used to start or stop the elapsed timer on the display module.

Table 48-A shows examples of some typical displays. The information that can be displayed includes call-related displays (incoming calls, outgoing calls, and calls redirected to coverage) and non-call related information. Non call related dispays include message retrieval and personal service displays such as day, time day and date, and elapsed time. The exact form and content of messages will vary depending on the version of switch being used and the way the data base is constructed. Message form and content will also vary on calls between network nodes in DCS (Distributed Communications Service) networks and ISDNs (Integrated Services Digital Networks) based on the different types of switches that may be involved.

Table 48-1. Display Information

TYPE OF CALL	DISPLAY
Terminating Call Identification:	
Inside call	a=J D DOE
Attendant call	a=OPERATOR
Trunk call	a=OUTSIDE CALL (or)
	a=WATS
Call to Automatic Call	a=R JONES to SALES DEPT 12 077
Distribution Agent Call Forwarding	b=JACK D LOWE to RUTH JONES f
Call redirected via	d=OUTSIDE CALL to J F DAY s
Send All Calls	
Calls redirected via Coverage Criteria	a=J BOGARD to T B ASHE d
	a=OUTSIDE CALL to T F SNYDER b
Call answered using	a=S HOOVER to K S STEVENS p
Call Pickup	
Originating Call Identification:	
All calls while dialing	b=572-- (digits as dialed)
Terminal-to-terminal call	b=ANNE H SMITH
Trunk call	b=OUTSIDE CALL (or)
	b=97843541 (complete dialed number or)
	b=WATS
Automatic Call	b=SALES DEPT
Distribution Group Call Forwarding	b=RUTH JONES forward
Call redirected to	b=C R MILLS cover

```
coverage
Conference Calls,          b=CONFERENCE

Three-Way or Attendant
Intercom Call              d=INTERCOM
```

NOTE: Notations ‘‘a=,’’ ‘‘b=,’’ etc., within a display identify specific appearance on the Terminal. That is, ‘‘c=’’ means the *third appearance* on the terminal. The ‘‘>’’ symbol shows that there is more to the message being displayed. Use the SCROLL key. Letter notations on the right of the display show reason for call redirection information, e.g., ‘‘b’’ for Busy, ‘‘d’’ for Don’t Answer.

TYPE OF CALL	DISPLAY
Reviewing Stored Numbers:	
Automatic Dialing	AD=94669613
Last Number Dialed	LND=912242863
Non Call Related Displays:	
Message Retrieval:	WHOSE MESSAGES?
	MESSAGES FOR 5067 ANNE H SMITH
	NO MESSAGES
	You Have EDC Mail
	T H DOE 31224 10/16 11:40 am 2 mtg with >
	M R Stone is confirmed for 2:00 pm Call >
	if there are any changes
Time and Date	10:23 am FRIDAY SEPTEMBER 20, 1985
Elapsed Times	a=T H DOE 3:27:46

Feature History and Development

The Display-Voice Terminal feature was first introduced in System 85, Release 1. Subsequent enhancements have included:

- Introduction of the DCS networking capability with Release 2, Version 1, extended the range of useful information available through the Display — Voice Terminal feature.
- Introduction of the AT&T Personal Terminal 510D provided a new terminal capable of using the feature. First available in Release 2, Version 2 and retrofitable to earlier System 85 switches.
- Introduction of the Z300B Messaging Cartridge, for use with the 7404D VDS (Voice Data Station) and later with the 7406D Digital Voice Terminals. This enables the 513 BCT or a similar EIA data terminal to provide Display—Voice Terminal support. The messaging cartridge was first available in Release 2, Version 3.
- Introduction of the 7407D IDT (Integrated Display Terminal) provided a reduced cost digital terminal with Voice—Terminal Display feature capabilities. This terminal was introduced with Release 2, Version 3.
- Expansion of the Names list from 8,500 names to 32,767 available names. Increased capacity first available in Release 2, Version 3.

- Addition of a scrolling capability to provide for messages of more than 40 characters. First available in Release 2, Version 3.
- Introduction of the 7406D and 7406D With Display provided display terminals with somewhat reduced functionality, but with integrated display capability in the 7406D With Display and messaging cartridge capability in the 7406D, at a reduced cost. These terminals are new with Release 2, Version 4.
- Introduction of the PC/PBX Connection feature provides Personal Computers with the ability to access the Display—Voice Terminal feature. The PC/PBX Connection feature is introduced with Release 2, Version 4.
- Introduction of the ISDN capability with Release 2, Version 4, has further extended the range of potentially useful information available through the Display—Voice Terminal feature.

USER OPERATIONS

The following are the user operating procedures for this feature.

Call Identification — Normal Mode

— Using a 7407D IDT (Integrated Display Terminal), a D401A display module with 7405D voice terminal, or a 515 BCT:

a. If display is not on:

- Press ON/OFF. [Display field lights.]

b. If display is on, but in another function:

- Press NORMAL MODE. [Display field returns to Normal Mode function.]

— Using a 510D:

- Call identification is automatic if the PHONE screen is on in Release 2, Version 2 and later switches. If the PHONE screen is not on,
- Press the PHONE button on the terminal base. [PHONE screen appears], or
- If PHONE Screen is active but in another display function or mode, press the NORMAL MODE dot on the touch sensitive screen. [NORMAL MODE identifier field brightens.]

— Using a 513 BCT or other EIA terminal with a 7404D VDS and Z300B messaging cartridge:

a. Call identification is automatic if in the Local Mode (equivalent to the *Normal Mode* on the D401A Display Module), and not retrieving messages or setting soft options, or in the DATA mode.

b. If retrieving messages or setting soft options:

- Enter the Exit Command by pressing the ESCAPE key on the data terminal keyboard. [Screen changes to the Local Mode function menu with calling party identification.]

c. If in the DATA mode:

- Enter the Local Command by pressing the ESCAPE key twice, or the BREAK key once, on the data terminal keyboard. [Screen changes to the Local Mode function menu with calling party identification.]

— Otherwise no user operations are required.

Call Identification — Inspect Mode

*To Display Information on a Ringing Incoming Call While Active on Another Appearance:**

- Press INSPECT MODE. [Display changes to show Information on Incoming Call.]

*To Display Information on a Nonringing Incoming Call While Active on Another Appearance:**

- Press INSPECT MODE.
- Press the nonringing CALL APPEARANCE. [Display changes to show Information on Incoming Call.]

To Answer an Inspected Call

— If not active on another call:

- Press NORMAL MODE.
- Press CALL APPEARANCE.

— If active on another call:

- Press NORMAL MODE.
- Press HOLD.
- Press inspected CALL APPEARANCE.

Message Retrieval

Message Retrieval Without Scrolling

— Using any display capable system except the 513 BCT (or EIA Terminal) with 7404D VDS and Z300B messaging cartridge:

- Press MESSAGE RETRIEVAL. [Display shows Retrieval in Progress, Messages for (Name).]
- Press NEXT MESSAGE (to Display Each Message).

— Using a 513 BCT or EIA terminal with 7404D VDS and Z300B messaging cartridge from the Local Mode function menu screen:

- Move the cursor on the function menu screen to the [messages] position.
- Press the RETURN key on the data terminal keyboard. [Message Retrieval menu screen appears.]

---

* These procedures are not applicable to the 510D on Release 2, Version 2, and later switches. They do apply to any 510D used on switches prior to Release 2, Version 2 if an Inspect Mode dot is administered.

- Type in the letter ‘‘n,’’ or press the RETURN key to display the Next Message.

Message Retrieval With Scrolling:

- Press MESSAGE RETRIEVAL. [Display shows Retrieval in Progress, the Messages for (Name).]
- Press NEXT MESSAGE (to Display Each Message).

  If message is continued, display shows continuation mark ‘‘>’’ in last field.
- Press SCROLL (to display additional segments of displayed message).

  If SCROLL is pressed when there is no next segment, the display will show the next message (same as NEXT MESSAGE button).

To Delete Displayed Message From File

— Using a 513 BCT with 7404D VDS and Z300B messaging cartridge:
  - Type in the letter ‘‘d.’’ [Screen shows DELETED.]

— Using any Other Display Capable Terminal:
  - Press DELETE MESSAGE. [Display shows DELETED.]

*To Return a Call During Message Retrieval**

— Using a 513 BCT with 7404D VDS and Z300B messaging cartridge:
  - Go off-hook. [Dial tone]
  - Type in the letter ‘‘c.’’ [Call-progress tones]

— Using any other display capable terminal:
  - Press RETURN CALL. (Extension number must have appeared in the displayed message.)

To Exit Message Retrieval Mode

— Using a 513 BCT with 7404D VDS and Z300B messaging cartridge:
  - Enter the Exit command by pressing the ESCAPE key on the data terminal keyboard.

— Using any Other Display Capable Terminal:
  - Press NORMAL MODE.

---

* To return a call from the message retrieval mode, the extension number of the party to be called must be part of the message.

Lock or Unlock Functions

To Lock the Terminal (Blocks Message Retrieval):

- Go off-hook on an inactive line appearance. [Dial tone]
- Dial the LOCK access code. [Confirmation tone]

This terminal cannot now be used to perform any Message Retrieval functions.

To Unlock the Terminal (Return Message Retrieval):

- Go off-hook on an inactive line appearance. [Dial tone]
- Dial the UNLOCK access code. [Confirmation tone]

Display, Time and Date

— Using the 513 BCT with 7404D VDS and Z300B messaging cartridge on the LOCAL Mode function menu screen:

- Move the cursor to the [time/date] box.
- Press the RETURN key. [Current time, day of the week, month, date, and year, appears on the message line.]

— Using any other display capable terminal:

- Press DATE/TIME. [Display shows current time and date.]

To return to normal mode:

- Press NORMAL MODE,

or

- Wait several seconds and the Time-Out function will return the display to the Normal Mode automatically.

Elapsed Time Timer

— To start elapsed time display:

- Press TIMER. [Timer starts.]

— To stop timer and clear time from display:

- Press TIMER.

Call Coverage Display Functions

To Access a Principal's Message File as a Covering User:

- Press an inactive appearance button.
- Press COVER MSG RETRIEVAL. [Display shows WHOSE MESSAGES?]
- Dial principal's extension number (when display shows: MESSAGES FOR [Name]:).
- Press NEXT MESSAGE. [Message appears on display.]
- If scrolling is available and the message is continued, press SCROLL.

To Access A Principal's Message File During a Call With the Principal:

- Press HOLD.
- Press an idle appearance button.
- Press COVER MSG RETRIEVAL. [Display shows WHOSE MESSAGES?]
- Dial principal's extension number.
- Press held appearance.

To Return the Call for a Principal:

(Originator's extension number must have appeared in the message).

- Press TRANSFER. [Dial Tone]
- Press RETURN CALL. [Confirmation Tone]
- Press TRANSFER. (Principal is connected to message originator's terminal either in a ringing state or after answer.)

Message Sources:

Placing a message is not a function of the Display—Voice Terminal feature. For information or user operations in placing a message, see the appropriate messaging service feature (Unified Messaging, AUDIX, Leave Word Calling, or Message Center).

CONSIDERATIONS

Terminals Used With This Feature

AT&T Personal Terminal 510D and 515 BCT

These are data terminals with integrated voice terminal units. They provide display capability on their data terminal screens.

513 BCT or an EIA Terminal

The 513 BCT or a similar EIA terminal can provide Display—Voice Terminal capabilities when combined with a 7404D VDS (Voice Data Station) and a Z300B Messaging Cartridge.

D401A Digital Display Module

This is a 40-character alphanumeric display unit with function buttons that can be attached to the 7405D voice terminal to provide a visual display capability with that voice terminal.

7406D and 7406D With Display Digital Voice Terminals

These are reduced cost digital voice terminals. The 7406D provides connectivity to an EIA data terminal such as the 513BCT) and can accept the Z300B Messaging Cartridge for Display—Voice Terminal displays. The 7406D With Display has an integrated display (like the 7407D) and provides Display—Voice Terminal feature services without an associated data terminal. Both versions have reduced functionality by comparison to the 7405D at a reduced cost.

7407D IDT (Integrated Display Terminal)

This is a digital voice terminal with a built-in display module. From the standpoint of the Voice Terminal Display feature, it provides the same functionality as the D401A Digital Display Module with the 7405D Digital Voice Terminal at a reduced cost.

Scrolling

The D401A Digital Display Module can show a maximum of 40 characters at a time. Stations with a SCROLL button administered can display messages of more than 40 characters by pressing the SCROLL button. A message continuation symbol ‘‘>’’ appears in the last character field of the display if the message is continued. A long word continuation symbol ‘‘->’’ at the end of the display field means that the word shown on the display is continued in the next message segment. Stations without a SCROLL button will receive an advisory message like ‘‘Call Message Center’’ if a message of more than 40 characters is waiting. The same switch can support both scrolling and nonscrolling display stations. This function is assigned to stations on an individual basis.

ASCII Character Set

The characters that can be displayed include the full 96-character ASCII character set. This set consists of upper and lower case letters, the digits 0 through 9, and the more common punctuation marks and special characters. Table 48-B shows the characters that are available.

Switch Identification Data Base

The user can assign names to lines or trunk groups and load this information into the switch data base. This is done using the MAAP (Maintenance and Administration Panel), SMT (System Management Terminal), or the TCM (Terminal Change Management) feature (see Feature Administration). This allows the calling and called parties to be identified by name or by other identifiers such as department or organization. The format for these names is optional; however, the maximum length of a name is 30 characters. Due to overall memory space limitations, the average length of the assigned names cannot exceed 22 characters.

Truncation of Names

While names of 30 characters or less can be displayed on the 40-character display, there are situations where 2 names must be displayed at the same time (i.e., forwarded calls or coverage calls). This can result in messages that exceed the capacity of the display. To allow for this, the switch provides for the truncation of assigned names down to 15 characters. The default truncation assumes that the first 15 characters are the most significant. However, if this is not the case, a *truncation mark* can be entered to indicate where to begin the truncated name. This is done in Procedure 012, Word 1.

Table 48-2. ASCII Character Set

	0	@	P	‘	p
!	1	A	Q	a	q
"	2	B	R	b	r
#	3	C	S	c	s
$	4	D	T	d	t
%	5	E	U	e	u
&	6	F	V	f	v
’	7	G	W	g	w
(	8	H	X	h	x
)	9	I	Y	i	y
*	:	J	Z	j	z
+	;	K	[	k	{
,	<	L	\	l	|
-	=	M	]	m	}
.	>	N	^	n	~
/	?	O	_	o	PAD

Number of Name Records

As many as 8,500 names can be assigned to extension numbers and trunk groups in switches prior to Release 2, Version 3. In Release 2, Version 3, and later switches, up to 32,767 names can be assigned.

Periodic Compaction of Name Data Base

In switches with large Names Data Bases or where frequent changes are made to this data base, it is recommended that the data base be periodically compacted. This will reduce the likelihood of the Names Data Base overflowing the allocated memory. Compacting can be done using Procedure 012, Word 3 on the MAAP or SMT, or using the TCM feature.

Time-Out During Message Retrieval

While in either of the Message Retrieval Modes, the switch sets a timer between each retrieval action. If more than 5 minutes elapse between message retrieval actions, this timer will time out and terminate the session. This could cause the session to be dropped if a callback call initiated during a retrieval session lasts longer than 5 minutes.

Other 7405D Voice Terminal Modules

The D401A Digital Display module is compatible with the DTDM (Digital Terminal Data Module) and the Digital Function Key module. All three of these modules can be attached to a 7405D voice terminal at the same time. However, the call coverage module and the display module cannot be installed on the same terminal at the same time. When attached to a 7405D voice terminal, both of these modules occupy the same physical space.

Function Buttons

Display function buttons are administrable and can be assigned to any administrable feature buttons available. This applies to basic terminal buttons, buttons on the Function Button module, buttons on the Digital Display module, and administrable dots on the PHONE screen of the 510D with the following exceptions.

— Systems Prior to Release 2, Version 3

The Normal Mode button has a fixed position on the display module on Release 2, Version 2 and earlier switches.

— The 513 BCT (or EIA Terminal)

Mode and function selection is provided through screen cursor movement and keyboard entry on the data terminal. The following display modes and functions are available:

- Call Identification
- Inspect
- Retrieve Messages
- Next Message
- Delete Messages
- Callback
- Time/Date.

Message Security

The Lock/Unlock option prevents inadvertent or unauthorized retrieval of messages from a terminal with display capabilities. Dialing the Lock Message Retrieval access code ''locks'' the Retrieval Mode of the display. When this mode is locked, any press of the Message Retrieval button is ignored. Dialing the Unlock Message Retrieval access code returns the functionality of the Message Retrieval button.

Hard and Soft Processor Swaps

The contents of the Names Data Base are stored in a translation portion of switch memory. Therefore, these assigned names will endure a hard processor swap.

The Lock/Unlock option for message retrieval on display sets is stored in a status portion of switch memory. Therefore, when a hard processor swap occurs, every display voice terminal will be in the locked mode after the hard swap is finished.

Voice terminal display units do not operate during a hard processor swap.

The Display—Voice Terminal feature operates normally during a soft processor swap.

INTERACTIONS WITH OTHER FEATURES

The following System 85 features affect or are affected by the operation of this feature.

Abbreviated Dialing

When AD (Automatic Dialing) or list access is used on a terminal with display capability, the stored number is displayed. If the names data base is loaded for the number, the associated name immediately replaces the number on the display.

If the stored number includes a security code, such as a password or authorization code, this code will also be displayed unless it is protected in the list by the *suppress function code*. If the suppress function code is used, the protected characters (except ‘‘*’’ or ‘‘#’’) will be replaced on the display by ‘‘s’’ indicating a character has been suppressed. The suppress function code is available on Version 3 and later switches.

For versions prior to Version 3, the manual digit entry function can be used to protect security codes. When manual digit entry is used, an underscore ‘‘_’’ is displayed rather than the digits entered.

Beginning with the R2 V3 Issue 1.2 tape, if a user presses an AD button while the voice terminal is on-hook, the display shows the stored number for the button as ‘‘AD=stored number.’’

Beginning with R2 V4, if the AD button points to a list stored item (system, group, or personal list), the contents of the list item are displayed.

ACD (Automatic Call Distribution)

When queue-status displays are assigned in the ACD environment, these displays use 8 characters (6 digits and 2 spaces) of the available 40 characters. Further, these eight characters overlap with the source and destination fields on the 40-character display. Therefore, unless the source and destination names are fairly brief, these names are more likely to be truncated when queue-status displays are enabled.

Call Coverage

If a multiappearance voice terminal user who is busy on call receives a call on another appearance, the new call can redirect to coverage after the don’t answer interval. However, when this occurs, the covering user (equipped with a display) to whom the call redirects will receive a redirection notification of ‘‘b’’ (for busy) rather than ‘‘d’’ (for don’t answer).

DCS (Distributed Communications System)

Outgoing internode calls in a DCS: The displays shows an outgoing trunk call. Either the digits that were dialed or name of the trunk group, if assigned, is displayed.

Incoming internode calls in a DCS: The display shows the name of the calling party as though the call had originated on the local switch if all switches involved in the connection (the calling and called nodes and all tandem nodes) are System 85, Release 2, Version 2, or later. If other types of switches or other versions of the System 85 switch appear in the connection the specific information shown will vary depending on the types of switches involved.

ISDN (Integrated Services Digital Network)/PRI (Primary Rate Interface)

The Display — Voice Terminal feature works with the ISDN/PRI feature through the interworking function. Message type information provided by ISDN is passed to the Display — Voice Terminal feature software and made available to System 85 terminals with the display capability. Information displayed is not ISDN direct, but this fact is not readily apparent to the user.

Last Extension Dialed

When using the Last Extension Dialed feature to place a call, the called extension appears on the display unit. If the names data base is loaded for the called extension, the associated name immediately replaces the number on the display.

Last Number Dialed

When using the Last Number Dialed feature to place a call, the called number appears on the display unit. If the names data base is loaded for a called extension, the associated name immediately replaces the number on the display.

If a user presses the LND button while the voice terminal is on-hook, the display shows the stored number for the button as ‘‘LND=stored number.’’

Remote Access

The Voice Terminal Display for an incoming Remote Access call is ‘‘OUTSIDE CALL.’’ This display appears even if a different name is assigned to the trunk group in Procedure 012.

HARDWARE REQUIREMENTS

The Display—Voice Terminal feature requires one of the following combinations of additional or special hardware.

- Voice and Data Terminals:
  - The 510D

    This is an Executive Model data terminal with an integrated voice terminal. Keyboard and function keys, including Voice Terminal Display function keys, are provided on a touch-sensitive screen.

  - The 515 BCT

    This is a multifunction data terminal with an integrated digital voice terminal. Voice terminal function keys, including the Voice Terminal Display function keys, are provided on the face of the terminal cabinet.

  - 513 BCT, EIA Terminals

    Standard EIA terminals, such as the 513 BCT, can provide a Display—Voice Terminal capability when combined with the 7404D VDS (Voice Data Station) terminal or the 7406D Voice Terminal and supplemented with a Z300B Messaging Cartridge.

- Stand-Alone Voice Terminals:

— The 7405D Digital Voice Terminal

These voice terminals have display capabilities when properly supplemented. Each 7405D voice terminal to be used with the Voice Terminal Display feature must be equipped with a D401A Digital Display Module.

— The 7406D Integrated Display Voice Terminal

The 7406D With Display is a digital voice terminal with an integrated display. For the Display—Voice Terminal feature, this terminal works like the 7405D with a D401A Digital Display Module, although it has reduced functionality for other purposes.

— The 7407D IDT (Integrated Display Terminal)

The 7407D is a digital voice terminal with a built in display unit. It provides the same functionality for the Display Voice Terminal feature as the 7405D with D401A Digital Display Module, at a reduced cost.

- Personal Computers

The AT&T PC 6300, AT&T PC 6300 Plus, AT&T UNIX® System PC 7300, AT&T UNIX System PC 3B1, and many other IBM compatible PCs (Personal Computers) can be used with the Display—Voice Terminal feature when the PC/PBX Connections feature is also used. Six configurations or ‘‘packages’’ are supported by the PC/PBX Connections feature. See the section on the PC/PBX Connections feature in this manual for more information on these hardware options.

- Applications Processor

An AP (Applications Processor) with the MSC (Message Center Service) feature is also required if the Scrolling function of the Display—Voice Terminal feature is to be used.

FEATURE ADMINISTRATION

Assignment of the Display—Voice Terminal feature is on a per-terminal basis.

The customer can administer this feature using the SMT (System Management Terminal) or the TCM (Terminal Change Management) feature. This feature can also be administered using CSM (Centralized System Management).

The following are the applicable MAAP and SMT procedures.

MAAP AND SMT PROCEDURES — DISPLAY—VOICE TERMINAL			
PROCEDURE	**WORD**	**PURPOSE**	**SMT**
012	1	Assigns a name to an extension or trunk group.	Yes
012	2	Administers the name for the extension or trunk group assigned in Procedure 012, Word 1.	Yes
012	3	Compacts the Name Data Base software table to free as much memory space as possible to add additional names.	Yes
051	1	Administers the voice terminal equipment required for display functions and assigns the LOCK and UNLOCK option to the display capability.	Yes
054	4	Assigns the desired display feature buttons to a 7404D, 7405D, 7407D, 510D, or 515 BCT voice terminal, or to a D401A display module.	Yes
063	1	Assigns an automatic message waiting lamp to a voice terminal or 510D.	Yes
261	1	Assigns scrolling capability to AP Messaging	Yes
350	1	Assigns the first digit of the feature dial access code for the LOCK and UNLOCK feature.	No
350	2	Assigns the feature dial access codes. Applicable encodes are as follows: 68 LOCK Message Retrieval 69 UNLOCK Message Retrieval.	No

The following are the applicable TCM path names used with the AP 16.

TCM SCREENS — DISPLAY—VOICE TERMINAL	
PATH NAME	**PURPOSE**
terminal-change names compact	Compacts the Name Data Base software table to free as much memory space as possible to add additional names.
terminal-change names extension-names	Assigns a name to an extension number or a group of extension numbers.
terminal-change names trunk-group-names	Assigns a name to a trunk group or a set of trunk trunk groups.
terminal-change terminal buttons	Assigns the desired display feature buttons to a 7405D and D401A display module, or the 510D, or 515 BCTs. Assigns an automatic message waiting lamp to a voice terminal.
terminal-change terminal equipment	Assigns a display module to a 7405D voice terminal. Also, use this screen to assign the LOCK and UNLOCK option to a voice terminal with display capabilities.

The following are the applicable CSM Command Paths utilizing the **admin** area of TCM or FM.

CSM SCREENS — MASKS DISPLAY — VOICE TERMINAL		
APPL'N	**OBJECT**	**PURPOSE**
FM	trk-grp	Administers and assigns a name to an extension or trunk group.
TCM	extension	Assigns name to an extension.
TCM/FM	names-data base	Compacts the names data base in the switch so that unused words become available for future name entries.
TCM	This object will be set type: i.e., 36-button, 12-button, bct, vds, pt510, idt, feature-module, coverage-module, or data-module.	Administers the voice terminal equipment required for display functions, and assigns the LOCK and UNLOCK option for the display capability. Assigns the desired feature buttons on voice terminals or display modules, and assigns the automatic message waiting lamp.
TCM/FM	external-adjunct	Assigns the message scrolling capability associated with an AP.
TCM/FM	first-digit	Assigns the first digit of the feature dial access code for the LOCK and UNLOCK option.
TCM/FM	dial-access-code	Assigns the feature dial access codes. (System 85 R2 V4) The dial access code can be up to four digits long.

DISTRIBUTED COMMUNICATIONS SYSTEM

DESCRIPTION

The DCS (Distributed Communications System) is a service designed to meet the needs of customers with telecommunication requirements that exceed the capacity of a single switch. Using a DCS allows the customer to operate and control multiple switches as if they were one switch.

A DCS can contain 20 or more separate switches or nodes depending on the type (i.e., System 85, System 75, or DIMENSION System) and version of switches used. These nodes can be located in the same building, scattered around a metropolitan area, or spread across the country. The DCS can be an independent network or part of a larger network (Figure 49-1).

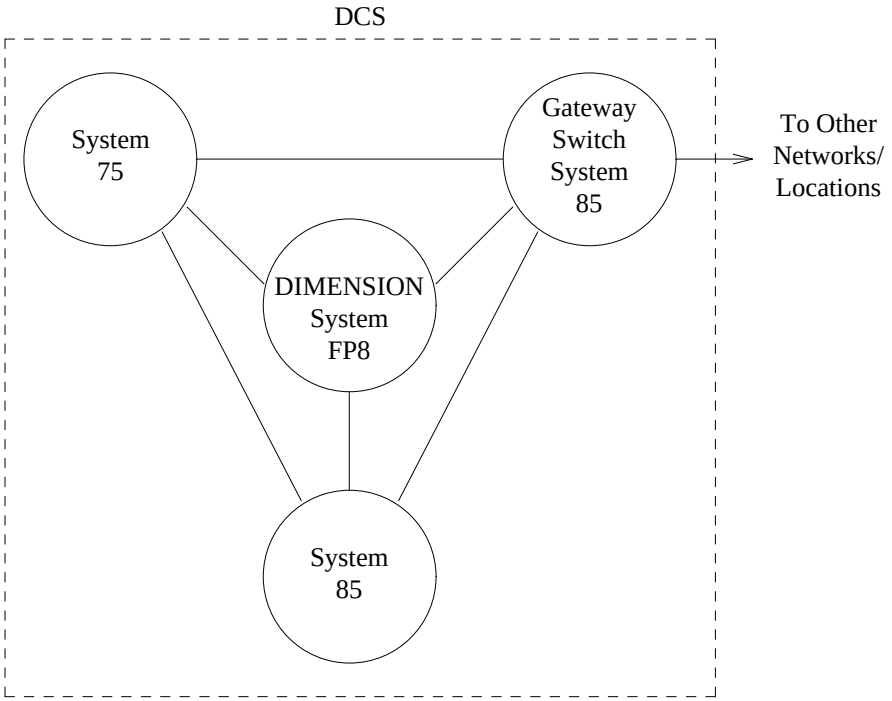

Figure 49-1. A DCS Cluster Connected to Another Network

Figure 49-1 shows a DCS with a single gateway switch to another larger network. Other arrangements are possible. Each node within the DCS could have its own access trunks to the other network if desired. However, the single node gateway node arrangement will often be more efficient and economical.

General Concepts

FEATURE TRANSPARENCY

Feature transparency is the characteristic of a DCS that distinguishes it from other types of networks. A feature is transparent if it works the same (from the user's point of view) whether the terminals involved are located on the same node or on different nodes. For example, in a non-DCS network, a terminal user can forward or transfer calls only to another terminal on the same switch. In a DCS, however, a terminal user can forward or transfer calls to any unrestricted terminal on any node in the DCS.

> **NOTE**: Features may be transparent in some DCS arrangements and not in others. All switches that can connect to a DCS do not have the same capabilities and some features work differently on one type of switch than they do on another. For this reason, feature that may be transparent when all switches are System 85, Release 2, Version 4, can lose transparency when any other type of switch (i.e., System 75) or another version of the System 85 switch is involved.

THE DCS CLUSTER

A DCS Cluster consists of two or more switches interconnected in such a way that a limited set of features is transparent to all users. The terms DCS and Cluster can be used interchangeably or in combination to refer to a Distributed Communications System network.

Mixed Clusters

Notice in Figure 49-1 that a DCS Cluster can include different types of switches. The same DCS can include different versions of the System 85 Release 2 switch, DIMENSION System switches (FP8), and System 75 switches. Some interactions occur and special limitations apply in ''mixed'' clusters. For example, a System 75 node can only serve as an end point or terminating node in a DCS. A System 75 switch cannot do tandem switching in a DCS. This reference manual addresses the System 85, Release 2 switches and primarily describes the Release 2, Version 4 switch. Differences will occur when other versions and other types of switches are used in a DCS. Some of these differences are noted under **Considerations** and Interactions with Other Features.

DATA PATHS

Each node in a DCS Cluster must have a data path to every other node. Data paths allow the switch processors to exchange call processing information, and it is this exchange of information that enables the network to function as one switch. The DCIU (Data Communications Interface Unit) provides these data paths via *DCIU Links* and *Network Channels*.

THE DCIU LINK

The DCIU link, in its DCS role, is a hardware connection between DCIUs on separate switches. Each System 85 node in a DCS must have a DCIU and must be connect through the DCIU, either directly or indirectly with every other node in the DCS. The DCIU link is sometimes called a *Signaling Link*. It provides a full duplex, synchronous data path between DCIUs. The DCIU links carry call processing

information between nodes via *logical channels*.

Logical Channels

A logical channel is a *virtual circuit* that is a segment of the data stream carried on a link. It is a virtual circuit because it is defined by software (or firmware) rather than consisting of strictly hardware components. A logical channel carries a packet or frame of data. Packets and frames are essentially the same thing outside of the BX.25 environment. A frame actually contains some additional header and trailer information that is used by the BX.25 protocol but does not otherwise affect the information content of the packet. For the Switch Link (the connection between the DCIU and the local switch processor), logical channels are called *ports*. Each link (Release 2, System 85 DCIUs) supports up to 64 software-assigned logical channels. If either end of a link connects to a DIMENSION System switch, the link is limited to 20 logical channels.

Data paths may be direct (from the originating switch to the receiving switch) or indirect (pass through intervening nodes when necessary). Indirect data paths can use up to three DCIU links (one between each pair of switches or processors in the path).

LIMITING FACTORS

Each switch is limited in the number of DCIU links that it can support for DCS use. Factors that limit the number of DCIU links available include the following:

- The type of switch (DIMENSION Systems, System 85, or System 75). Different types of switches support a different linkage configuration.
- The number of APs or adjunct processors (i.e., AUDIX units) connected to the switch. Each AP and adjunct processor uses a DCIU link.
- The type of DCIU linkage (direct or indirect) used.

The DCIU

The DCIU is a special purpose processor, located in the Common Control Cabinet of the System 85, that operates as a packet switch. The DCIU receives call processing information from the switch processor, assembles this data into discrete units called packets, and then routes these packets of data to the appropriate distant switch processor over the appropriate DCIU link logical channel pair. A *link logical channel pair* is a specific logical channel (or port) on a specific link, and is identified in software during DCIU administration. The DCIU also receives packets from distant switch processors and routes this information either to the local switch processor or to another distant processor according to internal instructions contained in the DCIUs firmware.

DCIU RELEASES

Two DCIU releases are available, and both can be used in the same cluster.

- *Release 1 DCIU*
  The Release 1 DCIU provides up to 4 links with 20 logical channels each and is used by DIMENSION

System FP8 switches.

- *Release 2 DCIU*

  The Release 2 DCIU provides up to 8 links with up to 64 logical channels each and is used by System 85, Release 2 switches. On the Release 2 DCIU, 19 of the switch link ports are predesignated for DCS application.

Both releases support DCS connections; however, Release 2 DCIUs provide an alternate routing capability while the Release 1 version does not. Alternate routing is described later in this section.

The release 2 DCIU has a total of nine communications links (ports). There are eight outside data links (1 through 8) that connect to other DCIUs, and an internal link (link 0) connects it to the local switch processor. The internal link is referred to as the *switch link* to distinguish it from the outside DCIU links. The most significant difference between the switch link and the DCIU links is the protocol used. The switch link uses DMA (Direct Memory Access), while the DCIU links use the BX.25 transmission protocol. Logical channels on different links are associated via network channels.

SCI (Switch Communications Interface)

System 75 nodes do not use a DCIU as such but have their own circuitry, a SCI, that performs the same functions. The SCI is compatible with the DCIU link and is similar to the Release 2 DCIU in a DCS role. The SCI provides for up to 4 DCS links with up to 64 logical channels each and supports data link hops. It does not support alternate routing.

NETWORK CHANNELS

The DCIU passes data between links along internal paths (paths within the DCIU itself) called network channels. Network channels are set up in administration (Procedure 257, Word 1) and establish the association between logical channels on two different links.

When a data packet is received, it is routed via the network channel to the appropriate logical channel (or port) on the outgoing link. For example, data intended for the local switch is routed to a port on the switch link (Link 0), and data intended for a distant switch is routed to the appropriate logical channel and DCIU link. For data packets intended for a distant switch, this can work differently depending on what release DCIU is involved.

- In a Release 1 DCIU, network channels are given fixed assignments. That is, a specific network channel always associates packets received on a particular link logical channel or port with a specific logical channel on the link leading to the distant switch. This arrangement is called a Fixed Network Channel or PVC (Permanent Virtual Circuit).
- In Release 2 DCIUs, the packet routing concept is modified to allow both fixed channels and *Alternate Routing*. With Alternate Routing, the DCIU selects a network channel based on a *destination routing code* contained within the header information. The DCIU can select from up to two alternate network channels to reach a distant switch if the link for the primary network channel is not available for some reason.

The operation and functions of the DCIU is described in detail in Appendix D of this manual.

DCIU Linkage Options

Two basic options are available for DCIU linkage configuration. These are direct and indirect linkage. Direct linkage provides a direct (no hop) data path between nodes, while indirect linkage uses one or two hops between nodes. The term ‘‘hop’’ is used when a data path passes through an intervening DCIU before reaching its destination. This is similar to the tandeming process for tie trunks. Hop is used to distinguish between data paths and communications paths.

INDIRECT LINKAGE

Figure 49-2 shows a DCS cluster that uses indirect linkage to achieve a minimum linkage configuration. Link minimization provides the minimum essential data paths needed for DCS service. At optimum, this means that there will be only one data path between any two nodes. Notice that there are no direct data links available between nodes 1 and 3, 1 and 4, or between nodes 3 and 4. All data paths between nodes 1, 3, or 4 are indirect. They must pass or hop through node 2.

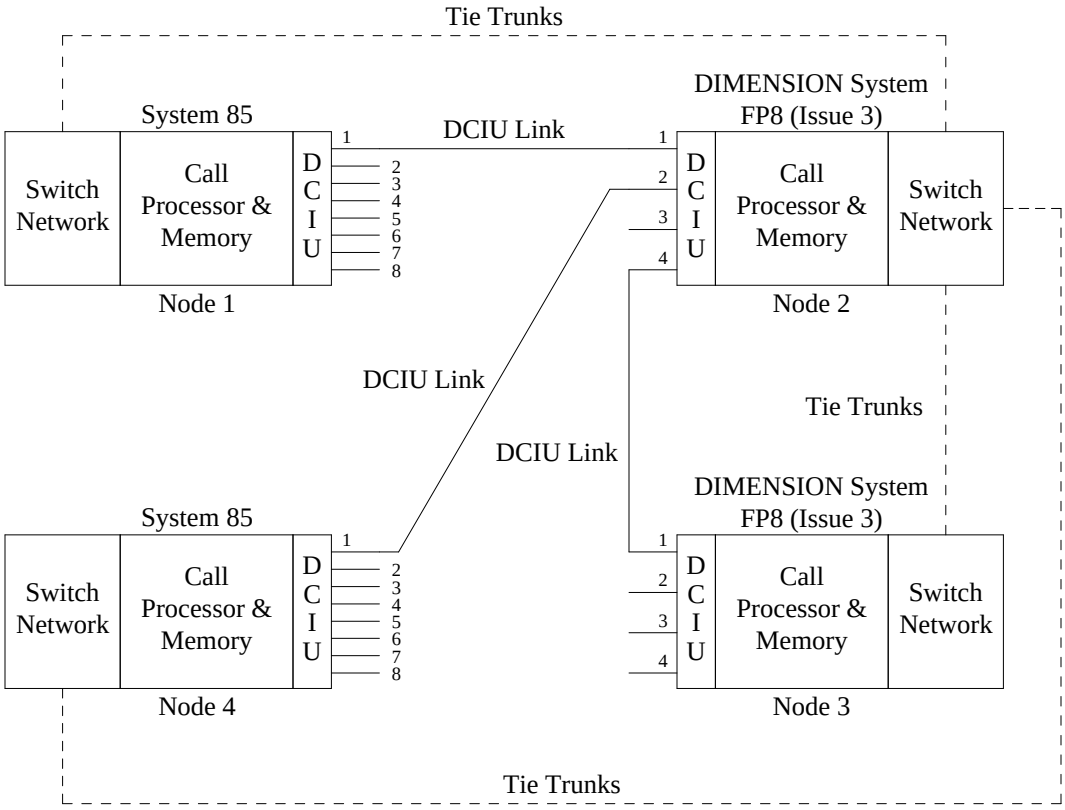

Figure 49-2. Link Minimization DCS Configuration

Because this arrangement requires less hardware, it is less expensive than direct linkage. It also uses fewer link connections at each DCIU (except the hub in a star configuration) leaving more connections available for other applications. However, indirect linkage is less reliable than direct linkage. For example, failure of the data link between nodes 2 and 4 (Figure 49-2) will cause loss of transparency between node 4 and all other nodes in the network.

DIRECT LINKAGE

Direct linkage provides *''no hop''* data paths between nodes in a DCS. A fully implemented direct linkage configuration would provide a no hop data path between every node in a DCS. Figure 49-3 shows a DCS that uses direct linkage for most of its data paths (4 out of 6).

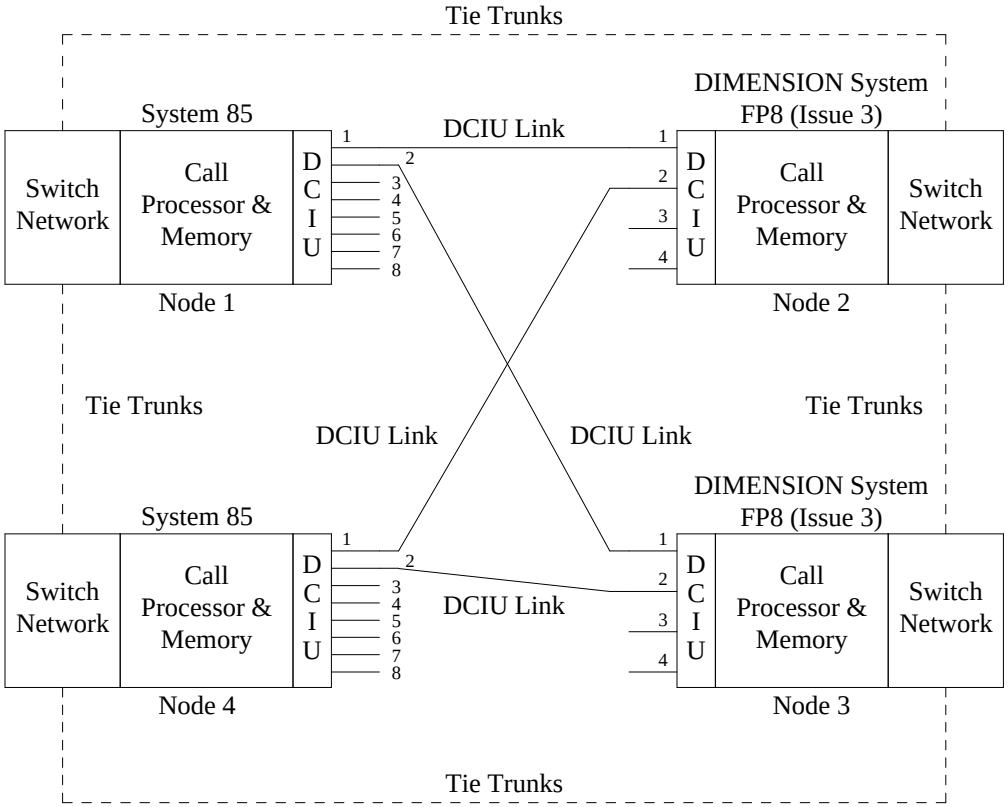

Figure 49-3. Direct Linkage DCS Configuration

In a large or highly disbursed network, fully implemented direct linkage is not always practical and usually some combination of direct and indirect linkage is used. In the example shown in Figure 49-3, if the data link between node 1 and node 2 fails, transparency is lost only between these two nodes. If *alternate routing* were available, transparency could be maintained even between nodes 1 and 2.

The problems with direct linkage are: for a system with three or more nodes, direct linkage is more expensive than a link minimization arrangement; direct linkage can limit the number of nodes that can be included in a DCS; and direct linkage uses DCIU connections that may be needed for other applications.

ALTERNATE ROUTING OF DCIU MESSAGES

Alternate routing is assigned on a per-network channel basis and provides a way for DCIU messages (DCS applications) to bypass a failed DCIU link. Alternate Routing is available only on data paths where Release 2 DCIUs are used at both ends. The use of link minimization configurations tends to limit or eliminate the effectiveness of alternate routing.

Network Channels

Alternate routing is enabled for a network channel using switch administration Procedure 257, Word 1. When a network channel is assigned alternate routing, the second link and logical channel (Component B) is filled with dashes. The alternate routing network channel is then assigned a *destination routing code* in Procedure 257, Word 2. In effect, the destination routing code takes the place of the second logical channel link pair for alternate routing network channels. When alternate routing is used, the packet header includes a destination routing code and postage.

Destination Routing Code

The destination routing code identifies the node for which a packet is intended. It must be common throughout the network. That is, a given destination routing code must identify the same destination switch and port from any node in the system. The destination routing code is used at each alternate routing DCIU to select up to three routes (a primary and two alternate routes) that can be used from that DCIU to reach the destination switch. At the DCIU serving the destination switch, only one route (the primary) is provided that routes the packet to the designated port on the switch link. Alternate routing network channels are assigned to destination routing codes at each alternate routing node using Procedure 257, Word 4.

Postage

Postage is the system's way of keeping track of the number of hops that have been used. A data path is limited to a maximum of two hops. When the DCIU receives a packet that is using alternate routing, it decrements the postage; and if the result is negative, the message is discarded (the 2-hop limit has been used up). If the result is positive, the DCIU selects a network channel from the routing table that serves the destination routing code of the packet.

Fixed Network Channels

Alternate routing paths can use fixed routing network channels or PVCs at hops or intervening nodes. When an alternate routing path passes through a node that uses a PVC, it works just like a nonalternate routing data path. That is, it passes from the incoming link logical channel to a specific, predesignated outgoing link logical channel. However, alternate routing packets must originate and terminate on alternate routing nodes. The additional header information used for alternate routing (destination routing code and postage) cannot be provided or deleted by a fixed network channel switch.

Routing on Failure

Alternate routing uses a technique called routing on failure. This technique uses the primary data path (first-choice routing) until a link failure is encountered. If this happens, the switch can select an available alternate route serving the same destination routing code. Each destination routing code is assigned a primary route and one or two alternate routes at each node that uses alternate routing during DCIU administration.

Example: Figure 49-4 shows an example of a DCS cluster that uses alternate routing. In this example, alternate routing paths are labeled with the terminal node numbers (the node numbers of the originating and

destination nodes) and the route number. That is, the primary path from node 2 to node 4 is labeled 241, the first alternate path is 242, etc.

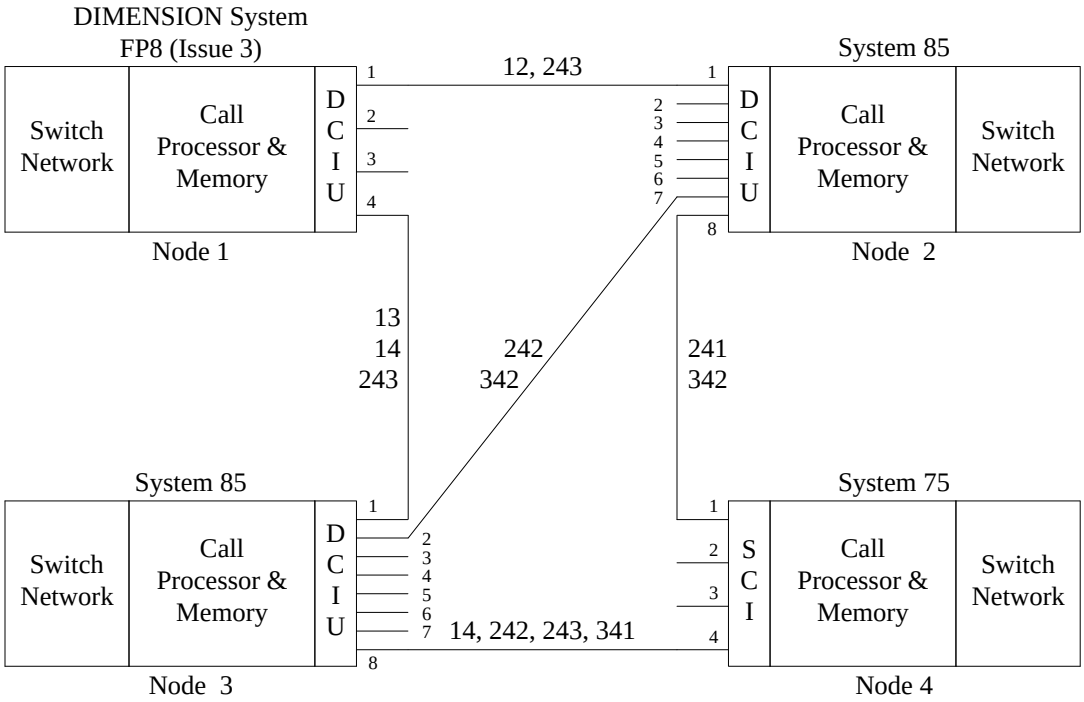

Figure 49-4. Alternate Routing DCS Arrangement

Data paths between nodes 2, 3, and 4 are set up using alternate routing. Node 1 is a DIMENSION System FP8 switch and is not capable of using alternate routing. All data paths that originate or terminate at node 1 must use fixed routing or PVCs (Permanent Virtual Circuits). Path 12 is a direct linkage path from node 1 to node 2. Path 13 is another direct linkage path from node 1 to node 3. Path 14 is an indirect linkage path that uses the same link as path 13, then hops through the DCIU at node 3 and goes on to node 4 over the same link that is used by paths 242, 243, and 341. If any of these links fail, transparency for node 1 is lost on all paths that use that link.

A packet from node 2 to node 4 will attempt to follow path 241 first. This is a direct linkage path between these two nodes. The status of the link between 2 and 4 is checked at node 2 before the packet is sent. If the link is down, an alternate route is selected, in this case path 242. Path 242 uses the link to node 3 first and then switches to the link between nodes 3 and 4. This is the same DCIU link that supports paths 14, 242, and 341, but each of these data paths use a different logical channel.

Fixed Network Channel Hop

In the route 3 path between nodes 2 and 4 (243), the path hops through the DCIU at node 1. Node 1 is not capable of providing alternate routing. This path is set up as follows:

a. The network channel for path 243 is set up at node 2 as an alternate routing network channel (route 3) for the destination routing code that identifies node 4. The link logical channel pair used leads directly to node 1.

b. At node 1, the link logical channel pair for route 243 (the same link logical channel pair used in a above) is set up as a Fixed Network Channel or PVC routing to a link logical channel pair serving node 3. This is done in the same way as all other network channels for node 1. This works for a hop because the packet is simply passed from the incoming link logical channel pair to the outgoing link logical channel pair, and the DCIU is not required to do anything with the header or trailer information.

c. At node 3, the network channel for path 243 is set up in the same way that it was at node 2; except that from node 3, the direct link to node 4 is listed as the primary or first route rather than the third alternative. That is, at node 3 the routing table for the destination routing code identifying node 4 is set up as though the packet had originated at node 3 with the link between nodes 3 and 4 as the primary route.

d. A separate alternate routing network channel is set up to route incoming packets from the final link logical channel used for this path to the appropriate port on the switch link. This network channel uses only one route to serve this path; however, it must still be set up using alternate routing so that the DCIU will handle the packet header and trailer information correctly.

It is acceptable to use a PVC as part of the data path in an alternate routing pattern. In the example used, all other possibilities will have been eliminated before this path is used. That is, route 1 is tried first and then route 2 is tried. Route 3 will only be used if a link failure is found on both of these routes. When route 3 is used, no other options are possible. The only problem is that node 1 does not decrement the postage on the packet. By passing through a nonalternate routing node, it is possible to exceed the 2-hop limit. In the simple network used for this example, there is no real problem. The 2-hop limit could only be exceeded by going into an infinite loop. In this example, when this happens, a successful data path is not possible. However, in a large and complicated network, this could be a meaningful problem that can only be avoided by careful engineering.

Data Path Looping

The possibility of entering a logical infinite loop does exist when alternate routing is used. This is because alternate routing data paths are not fixed (as they appear to be in Figure 49-4), but are established dynamically at each DCIU as the packet progresses from one link to the next. Table 49-A shows how the route tables would be set up at each node for the data paths from node 2 to node 4.

Table 49-1. Routing Tables for Alternate Routing Data Path

Node and Route		Link	Remarks
Node 2	Route 1	24	Most direct route; No Hops
	Route 2	23	1-Hop Route
	Route 3	12	2-Hop Route
Node 3	Route 1	34	Most direct route; No Hops
	Route 2	23	1-Hop Route
	Route 3	13	2-Hop Route
Node 4	Route 1	0	Local switch link
	Route 2	N/A	Not used
	Route 3	N/A	Not used
Node 1	PVC	13	Fixed Network Channel between links 12 and 13

Figure 49-5 shows the same DCS used in the previous example, but with two links (24 and 34) in a failure condition. This scenario is highly unlikely unless the SCI at node 4 is out of service. This scenario is used to illustrate data path looping in a simple setting.

Again, a packet from node 2 to node 4 will attempt to use link 24 first. Finding this link to be in a failure condition, the routing table for the destination routing code identifying node 4 is checked for a Route 2 (Table 49-A). The Route 2 choice shows that link 23 should be tried next. Link 23 is in service so the packet is sent to the DCIU at node 3.

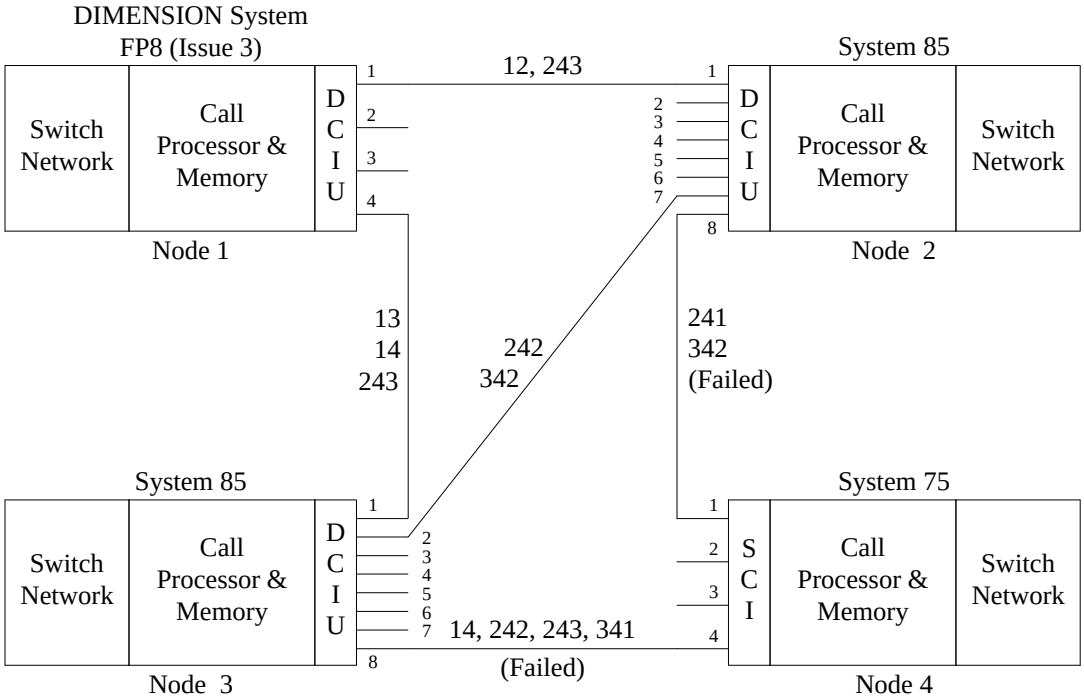

Figure 49-5. Data Path Looping With Alternate Routing

At node 3, the routing table for the destination routing code (Table 49-A) is checked, and Route 1 (link 34) is tested. Here too, the first-choice route is found to be in a failure condition so Route 2 from the routing table is attempted. Notice in Table 49-A that Route 2 at node 3 uses link 23. This is the same link that the packet used to reach node 3.

The packet is sent back on the same link that it came in on, and the cycle begins again at node 2. This is a logical infinite loop, and this packet could theoretically shuttle back and forth between node 2 and node 3 forever, or until either link 24 or link 34 was put back into service.

Stopping an Infinite Loop

The best way to deal with the infinite looping data path problem is to avoid it by careful network engineering. However, a mechanism has been provided to end an infinite data path loop automatically if this should occur. This method uses the postage field in the alternate routing packet header. As mentioned earlier, when an alternate routing capable DCIU receives an alternate routed packet, it decrements the postage; and if the resulting value is negative, discards the packet. Even if a packet enters an infinite

looping data path, the packet will be discarded (and the data path ended) when the postage runs out.

DCIU Ports

FIXED DCIU PORT RESERVATIONS

In Release 2, Version 3 and earlier System 85 switches, the uses for DCIU ports are fixed. That is, each DCIU port can be used for only one application. Each DCIU port is **reserved** for a specific use in the factory before the system is shipped. These reservations cannot be changed and these ports cannot be used for any other purpose. The same ports must be used for the same purpose on all DCIUs.

For example, on a System 85, Release 2, Version 3, switch, DCIU port number 11 can only be used for Leave Word Calling on AP number 2. DCIU port number 11 has been permanently reserved for the Leave Word Calling feature on AP 2. If there is no AP number 2 on a given switch, or if AP 2 does not have a leave word calling function, this DCIU port can not be used.

FLEXIBLE DCIU PORT RESERVATIONS

Flexible DCIU port reservations were introduced in Release 2, Version 4. Flexible port reservations provides a degree of flexibility not available with earlier versions. It also results in administrative requirements not previously placed on users or service support personal. With flexible port reservations, if a particular requirement (i.e., AP 2) does not exist, a port is not reserved for that requirement. If there is no AP 2, ports 9 through 13 (those ports designated for AP 2) can be used for another purpose if needed. This flexibility is further enhanced by the shared use of adjuncts in a DCS which is also new with Release 2, Version 4 switches.

PORT RESERVATION VERSUS PORT ASSIGNMENT

Assignment

Assignment is done at the customer facility. Assignment amounts to *turning on* the function for which a DCIU port has been reserved. Assignments are made during switch administration. The assignment of an application to a DCIU port is limited to the application for which that port has been reserved.

Reservation

Port reservation establishes in the switch processor memory the identity of the device that will be at the distant end of the DCIU link. In Release 2, Version 3 and earlier switches, reservations are made in the factory and are fixed. For these switches, all like DCIU ports are reserved for the same application. In Release 2, Version 4 switches, port reservations are flexible and this flexibility extends to the assignment process.

Flexible port reservations allows a port that is not needed for a particular function to be used for an alternative purpose. With flexible DCIU port reservations, the assignment of DCIU ports is also flexible. However, once the port is ‘‘*reserved*’’ for a particular application, it must either be assigned to that application, left unassigned, or the reservation must be changed before a different assignment can be made.

Port assignment flexibility is based on the DCIU port reservation process rather than the DCIU port assignment process.

Reserved or Unreserved Port Status

Because DCIU ports on Release 2, Version 4 switches do not have standard reservations, some new terms and concepts are needed. The ‘‘reserved’’ or ‘‘unreserved’’ status of a port effects administration. DCIU ports can still be *reserved at the factory* before the switch is shipped. This is done based on the TRACS (Translations Recovery Additions Conversions System) input. However, ports do not default to standard reservations. If not pre-reserved, the DCIU ports are **unreserved**. Separate administration is needed to set up DCIU port reservations. Whether or not ports are pre-reserved, separate administration is still needed to assign (or turn on) each DCIU port to its reserved application.

Standard Reservations and Assignments for APs

For local APs, DCIU port reservations and assignments are still somewhat fixed. That is, if APs are to be used on a particular switch, standard DCIU port reservations and assignments must be used. However, these standards are not assigned by default. The standard reservations and assignments must be administered just like any other port reservation and assignment. If a local AP is not required, these ports can be used for other purposes, but other ports cannot be used by a local AP. The standard ports for local APs are:

AP 1	Ports 1 through 8
AP 2	Ports 9 through 13
AP 3	Ports 14 through 18
AP 4	Port 19, and ports 30 through 33
AP 5	Ports 37 through 41.

The administration of the DCIU and its various applications is a complex topic and is treated separately and in considerable detail in Appendix D of this manual.

ES (ENHANCED SERVICES) MESSAGE SET

In Release 2, Version 4, the ES (Enhanced Services) message set is used for remote messaging in the following cases:

- Messages between AUDIX adjuncts and remote switches
- Messages between switches (switch-to-switch links).

N-digit Message Set: In Release 2, Version 3, and earlier switches, MCS (Message Center Service) messages are sent using the n-digit message set. This format is used for communication between the local switch and the AP.

In Release 2, Version 4, messages sent *from* an AP *to* a remote switch are converted to ES format by the local switch and routed to the destination switch. Messages originating from an AUDIX adjunct are sent in

ES format only.

Messages *from* a remote switch are sent in the ES format between switches. If the destination adjunct is an AP, the messages are converted to the n-digit format by the local switch before being sent on to the AP. If the destination is an AUDIX Adjunct, conversion is not necessary. The ES messaging capability provides several new or improved transparent feature operations. It is ES messaging that makes Centralized Messaging possible.

CENTRALIZED MESSAGING

Centralized messaging allows users in a DCS to access AUDIX and MCS (Message Center Service) without requiring each node in the DCS to have an AUDIX adjunct or AP. The operations of centralized messaging are generally transparent to the user.

Centralized Messaging Examples

The following examples show how Centralized Messaging can be used in a DCS network under a variety of conditions. These examples assume that all nodes in the DCS use Release 2, Version 4 switches. Earlier versions *do not* support centralized messaging.

- Messaging between a local switch and adjunct
- Messaging from a remote switch to an adjunct
- Messaging from a remote switch to an adjunct requiring one or more DCIU hops
- Messaging from an adjunct to a remote switch
- Messaging from an adjunct to a remote switch requiring one or more DCIU hops.

Local Adjuncts

Messaging between the switch and local adjunct is handled the same as for Release 2, Version 3 and earlier switches. Messages between the switch and an AUDIX adjunct are in the ES format. Messages between the switch and a local AP are in the n-digit format.

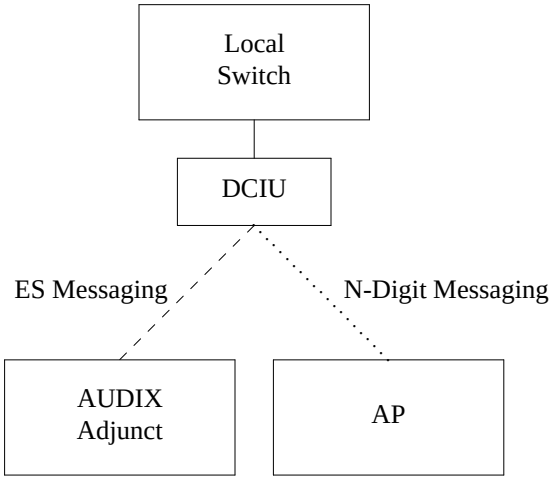

Figure 49-6. Local Adjunct Configuration

In the arrangement shown in Figure 49-6, only one (local) DCIU is used in the data path.

Remote Switch to Adjunct

Figure 49-7 shows a two node DCS arrangement with centralized messaging. When the remote switch sends a message to a centralized adjunct, the following occurs:

- The message is sent in ES format between switches.
- The local (centralized messaging) node receives the message and routes it to local adjuncts as follows:
  - — Messages to an AUDIX adjunct are sent in the ES format. This is the same format in which they are received from the remote switch.
  - — Messages to an AP are converted to the n-digit format and then sent to the local AP.

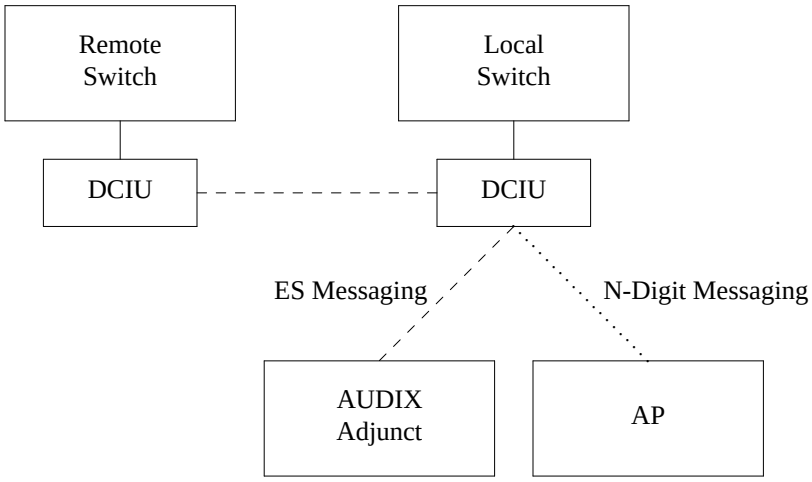

Figure 49-7. Remote Adjunct Configuration

In this example, two DCIUs are involved in the data link. One at the remote switch where the message is originated, and one at the centralized messaging location. At the centralized messaging location, the same DCIU that supports the DCS link (between switches) supports the links to the local adjuncts.

Remote Switch to Adjunct Using Intervening DCIU

Figure 49-8 shows a three node DCS with centralized messaging. When the remote switch sends a message *through* an intervening switch the following occurs:

- The message is sent in ES format from the originating switch to the intervening node.
- The intervening switch receives the message and examines the addressing information contained in the message packet header. The addressing information shows that the message should be routed to the centralized messaging location.
- The message is routed to the centralized messaging switch through the appropriate ES port.
- The centralized messaging node receives the message and routes it to the appropriate local adjunct as in the previous example.
  - — Messages for an AUDIX adjunct are sent on in the same format in which they are received. No conversion is needed.
  - — Messages for an AP are converted to the n-digit format and then sent to the AP.

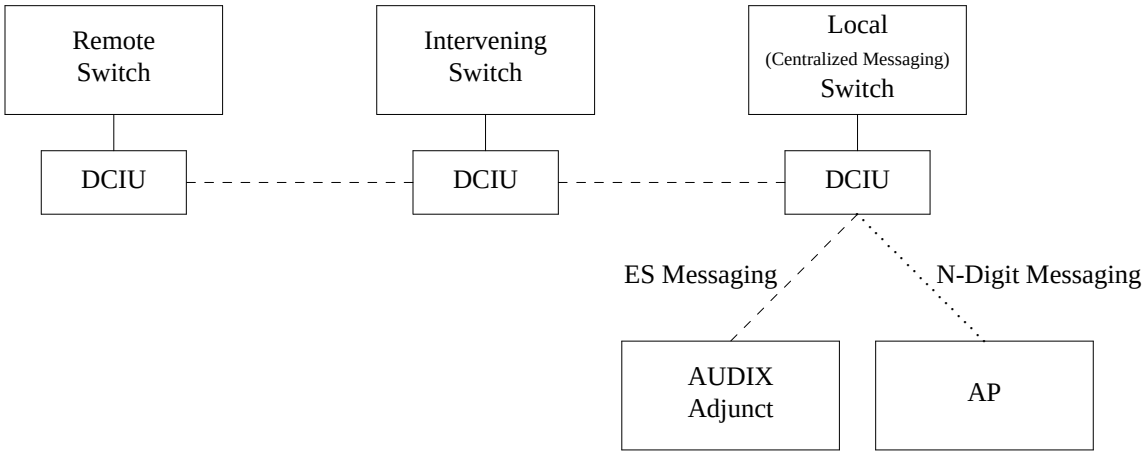

Figure 49-8. Remote Adjunct Configuration With a DCIU Hop

In this example, three DCIUs are involved. One at the originating switch, one at the intervening switch, and one at the centralized messaging switch. At the centralized messaging switch, the same DCIU supports the DCS links to other DCS nodes and the links to the local adjunct processors.

DCIU Hop: The process of passing a DCIU message through an intervening DCIU is called a **hop**. This is to distinguish it from the **tandeming process** used to pass trunk traffic through an intervening switch. The DCIU link is separate from and can follow a different route than the trunk path used by associated trunk traffic. That is, a DCIU message will not necessarily follow a path that parallels the trunk path for associated calls. Many DCIU messages, particularly in a centralized messaging arrangement, will not have associated trunk traffic.

Adjunct to Remote Switch

In Figure 49-9, an AP or AUDIX connected to node 1 routes a message to node 2. The following occurs:

- If the message originates from an AUDIX adjunct, node 1 reads the destination machine number and determines the message should be routed to another switch.

  or

  If the message originates from an AP, the message routes by extension number and is converted *from* n-digit format *to* ES format.
- Node 1 routes the message to node 2 over the appropriate ES port.
- Node 2 receives the message.

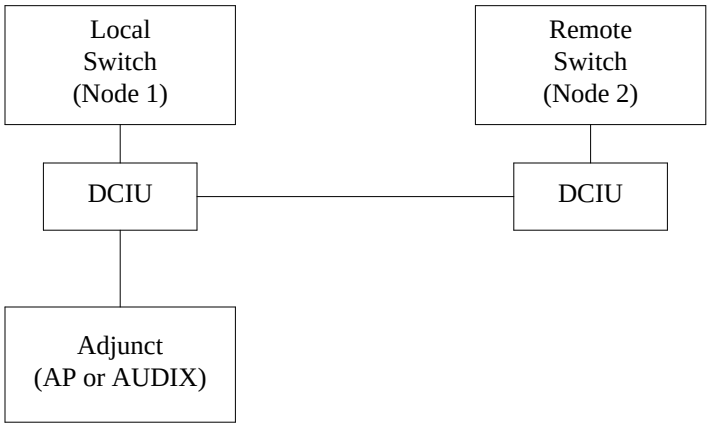

Figure 49-9. Adjunct to Remote Switch Configuration

Adjunct to Remote Switch Using Tandem Switches

In the next example (Figure 49-10), if an AP or AUDIX connected to node 1 routes a message *through* node 2 to node 3 (i.e., an intermediate switch intervenes in the message path), the following occurs:

1. If the message originates from an AUDIX adjunct, node 1 reads the destination machine number and determines the message should be routed to another switch.

   or

   If the message originates from an AP, the message routes by extension number and is converted *from* n-digit format *to* ES format.
2. Node 1 routes the message to node 2 over the appropriate ES port.
3. Node 2 receives the message and determines the message should be routed to node 3.
4. Node 3 receives the message.

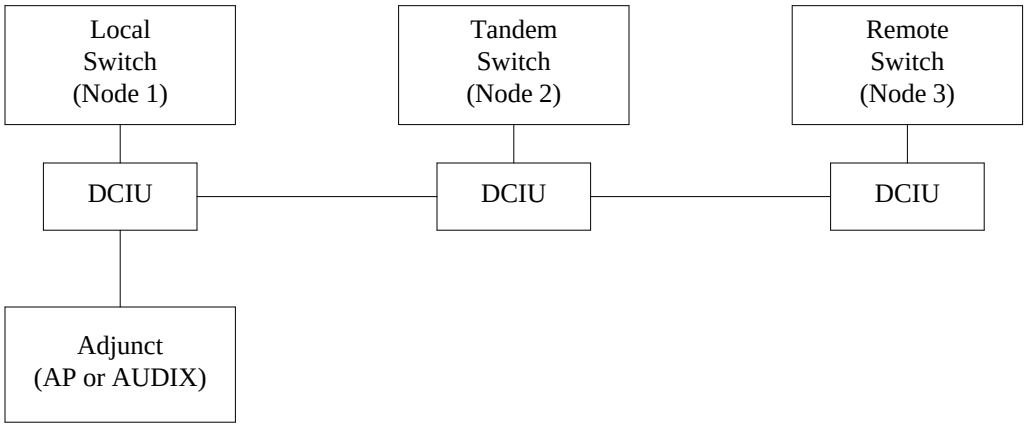

Figure 49-10. Adjunct to Remote Switch Configuration With DCIU Hop

Adjunct Configurations

In a DCS environment, configurations of different switch releases can cause loss of transparency since different versions of the same switch type and different switch types (i.e., System 75) do not possess the same capabilities. The following examples show network arrangements of System 85 switches with different levels of transparency.

AUDIX

The first example (Figure 49-11) does not use Centralized Messaging. Any software version that supports AUDIX can be used if each switch is connected to an AUDIX Adjunct by a direct (local) DCIU network channel. AUDIX capabilities can be provided locally at each switch and data transfer across DCIU links is not involved. System 85, Release 2, Version 4 capabilities are not transparent with this arrangement.

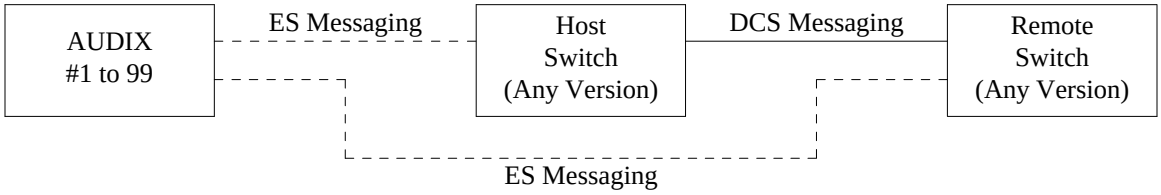

Figure 49-11. Remote AUDIX Without Centralized Messaging

In the second example, any software version including Release 2, Version 4 that supports AUDIX can be used as a remote switch without its own network channel if the destination AUDIX network adjunct number is set to ‘‘1’’ (see Figure 49-12). This restriction appears because older switches default the adjunct number in the ES message to ‘‘1.’’

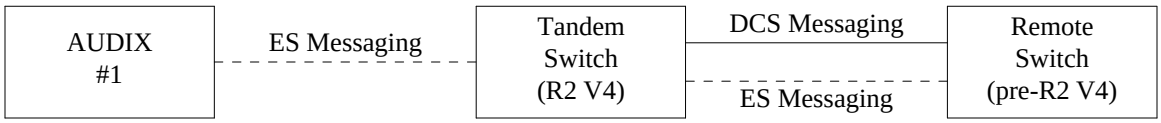

Figure 49-12. Remote AUDIX for Pre-Release 2, Version 4, Switches

In the third example, if the network AUDIX number is not ‘‘1,’’ only Release 2, Version 4 switches can be used for the remote switch without a direct network channel to AUDIX (see Figure 49-13).

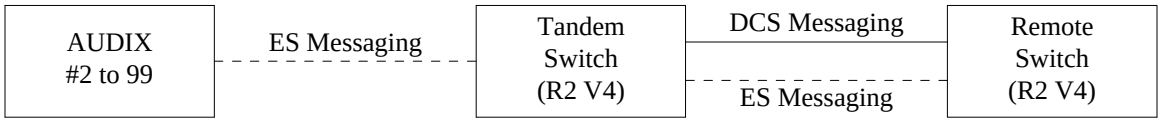

Figure 49-13. Remote AUDIX Configuration with Release 2, Version 4, Switches

MCS (MESSAGE CENTER SERVICE)

The configuration shown in Figure 49-14 does not use Centralized Messaging. In this example, MCS can only support DCIU connections to one switch. Only the host switch can pass messaging information to MCS. Any System 85 switch that supports MCS can use this configuration with the following variations in transparency:

- Switch versions before Release 2, Version 2 allow only direct calls to MCS that look like external calls.
- Release 2, Version 2 handles direct and forwarded calls transparently.
- Release 2, Version 3 sends calls to MCS based on the call coverage specified.

Figure 49-14. Message Center Service Without Centralized Messaging

With the configuration used in the next example, shown in Figure 49-15, MCS is fully transparent. Messages can be sent from the remote switch to the MCS adjunct or to the remote switch from the MCS adjunct by tandeming through the host switch. Additional capabilities that are also available include:

- Remote automatic message waiting lamps are updated.
- Remote LWC (Leave Work Calling) is possible.
- Message retrieval is supported.

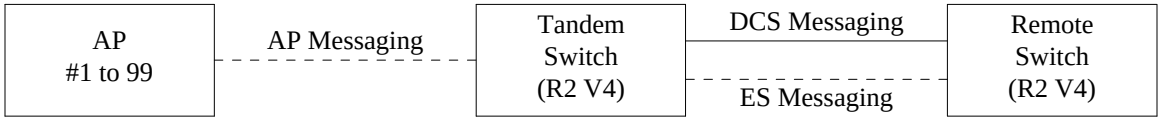

Figure 49-15. Message Center Service With Centralized Messaging

Uniform Numbering Plan

As with any automatically switched or direct dial networking system, a DCS requires a uniform or coordinated numbering plan. In a DCS, network wide coordination of the numbering plan is critical.

In a conventional (non-DCS) ETN (Electronic Tandem Network) without Extension Number Portability, each node is assigned a unique switch number or location code. Each of these separate nodes then has its own separate set of extension numbers. While the separate nodes must conform to the same numbering rules, duplication in extension numbers between nodes is allowed. This is because the switch numbers distinguish between like extension numbers on different nodes. A caller on one node of a conventional ETN who wants to call an extension on a different node dials the required access code, the location code for the remote node, and the extension number.

With a DCS, placing the call is simpler; however, the uniform numbering plan can be considerably more complex. A caller in a DCS can place a call to an extension on a remote node in exactly the same way that a call is placed to a local extension. The caller simply needs to dial the extension number, and the switch does the rest. The caller does not need to know where the extension is located or the location code for that node. With this arrangement, the switch must be able to use the extension number to determine where the desired extension is located. Within the DCS, the same extension number cannot be duplicated on two separate switches. This must also work for calls coming into the DCS from an outside switch, either from a private network other than the DCS itself or from the public network.

DIALING PLANS

A DCS dialing plan can use either a 4-digit or a 5-digit numbering system. To callers, all switches (dialing plans) within the DCS must appear the same. That is, if callers dial a 4-digit extension number to reach a local extension, they must be able to reach any extension on the DCS by dialing a similar 4-digit extension number.

4-Digit Dialing

The principal disadvantage to a 4-digit plan is that it severely limits the number of extensions available in the network. A 4-digit numbering scheme cannot contain more than 10,000 numbers (ranging from 0000 to 9999). In practice, the numbers that can be used for extensions would be limited to much less than 10,000 (generally 4,000 to 5,000).

One limiting factor is the need to use the first digit (or first two digits) as a switch identifier. This results in the local switch extension numbers being limited to less than the full set of 4-digit numbers. For example, in a DCS cluster with five nodes, the first digit would be enough to identify each node. In fact, each node could be identified by either of two first digits. If the digits 5 and 6 are assigned to node 3 for switch identification, the range of possible extension numbers for this node would be from 5000 through 6999, a total of 2000 numbers. This is oversimplified, but it shows the absolute limit imposed by a 4-digit numbering system. In actual practice, many numbers would need to be reserved for other uses such as trunk or feature dial access codes.

More flexibility can be achieved if the first two digits are used for switch identification. It is then possible to subdivide thousands blocks to provide larger or smaller groups of numbers to different nodes based on their differing needs. A small switch could be assigned a block of less than 1,000 numbers (say 5000 to 5499) and the rest of that thousands block (5500 to 5999) could be assigned to a switch that needed more extensions. However, the basic nature of a 4-digit numbering system still limits the use of such a dialing plan to relatively small DCS clusters.

Extension Number Steering

A DCS that uses a 4-digit dialing plan, can also use Extension Number Steering. Extension Number Steering is a switch attribute (administered using Procedures 350 and 354) that allows a number, in the same form as an extension number, to invoke a feature or dial access code. Many users find this method of accessing features and trunks easier to learn and use than dialing the basic codes themselves. In a DCS with a 4-digit dialing plan, Extension Number Steering uses the first one or two digits of the dialed extension number to identify the destination node. If the destination node is identified as the local switch, the call processes normally to the local extension. If the destination node is a remote switch, Extension Number Steering produces the dial access code and trunk group number needed to route the call to the remote node. In a 4-digit dialing arrangement, this is done as in a Main/Satellite arrangement. In fact, the DCS is configured as a Main/Satellite arrangement when a 4-digit dialing plan is used.

While a Main/Satellite arrangement is a perfectly satisfactory configuration for many small to medium-sized organizations, there are some inherent advantages to an ETN. These include the ability to use the AAR (Automatic Alternate Routing) feature which is not available in a Main/Satellite arrangement. The AAR feature provides call routing to distant node capabilities that are more flexible and more efficient than those available through Extension Number Steering.

5-Digit Dialing

The 5-digit dialing options are designed for customers with a need for more than 10,000 numbers in a single system or dialing plan. Two forms of 5-digit dialing are possible:

- Prefix digit dialing
- Unrestricted 5-digit dialing.

Prefix dialing employs Extension Number Steering or the AAR feature and is used with DIMENSION System switches (FP8, Issue 3), System 75 switches, and System 85 switches Release 2, Version 2 and earlier. The unrestricted form of 5-Digit Dialing is available in Release 2, Version 3 and later System 85 switches.

Prefix Digit 5-Digit Dialing

The prefix digit form of 5-digit dialing uses the first two digits of the 5-digit extension number to route calls to the appropriate node. This is done either with Extension Number Steering or the AAR feature. Figure 49-16 shows a DCS that uses this type of 5-digit dialing.

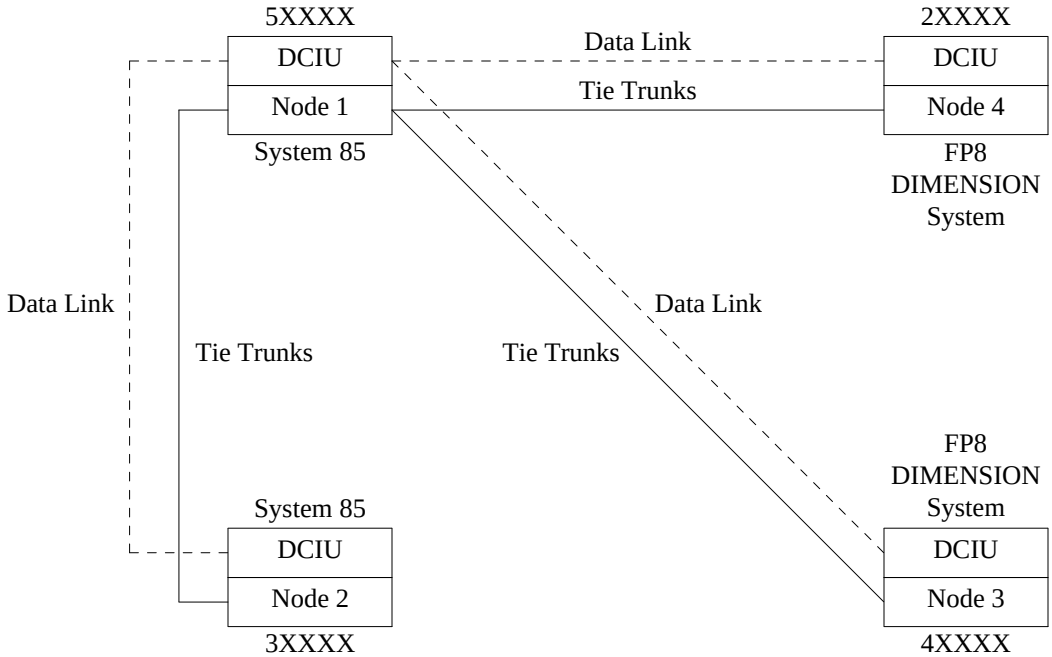

Figure 49-16. Prefix Type 5-Digit Dialing DCS Configuration

With this method, the switch actually uses a 4-digit numbering plan and either discards the first dialed digit or uses it only for interswitch routing identification. If Extension Number Steering is used, it works in much the same way as with 4-digit dialing except that an additional digit is available for node identification. If the call is on the home or local switch, the prefix (first digit) is deleted; and the call is routed to the local 4-digit extension. If the call is for a remote switch, the prefix and second digits are used to identify the node where the desired extension is located. Either Extension Number Steering converts the prefix to the appropriate trunk dial access code or the prefix plus the extension number is converted to a 7-digit AAR number, and the call is routed via the AAR feature. Either method (Extension Number Steering or AAR) can be used, and both methods can be used within the same DCS (although not on the same switch).

In Figure 49-16, the ''Xs'' in the extension numbers stand for any digit 0 through 9. The first two digits in each extension number must identify a specific switch or node.

> **NOTE:** This does not mean that both the first and second digit must be unique to a single switch. For example, in Figure 49-16, all four nodes could use the same second digit as long as no two switches use the same first digit. Conversely, the first digit could be duplicated in different nodes as long as the second digit is different.

In the example in Figure 49-16, the digit ''5'' in 5XXXX identifies node 1; the digit ''2'' in 2XXXX identifies node 4 and so on. When a caller on node 1 dials 20133, Extension Number Steering identifies the 20 as a call for node 4. The switch then deletes and inserts the necessary digits for the dial access code and trunk group number (or 7-digit AAR number) to route the call to extension 0133 on node 4. This system is available for DIMENSION System (FP8) and System 75 nodes as well as System 85 switches.

Unrestricted 5-Digit Dialing

Unrestricted 5-digit dialing was introduced on System 85, Release 2, Version 3 and is available only on these and later switches. Rather than using Extension Number Steering to route calls to other nodes, this system records all extension numbers in the numbering plan in memory routing tables on each switch. These memory routing tables contain pointers that show where each extension number is currently located. This allows an extension number on any switch in the system to begin with any digit not otherwise restricted. This method makes implementing the Extension Number Portability feature easier.

One benefit derived from unrestricted 5-digit dialing is the full line capacity of the Release 2, Version 3 switch can be used. In a 4-digit dialing plan and in a 5-digit dialing plan where prefix digits are used, the numbering plan itself limits any switch to a maximum of 10,000 numbers. In an unrestricted 5-digit dialing plan, this arithmetic limitation is removed, and from 15,000 to 16,000 extensions (depending on other applications) can be assigned to a single Release 2, Version 3 or 4 switch. However, a DCS Cluster is not limited to all prefix or all unrestricted 5-digit dialing. Figure 49-17 shows a DCS Cluster using both unrestricted and prefix type 5-digit dialing. For multiple switch DCS Clusters using unrestricted 5-digit dialing on all nodes, a line capacity of 60,000 is possible. For users with a high local area line requirement, this could mean a significant savings by using fewer switches to meet the requirement.

As a simplified example, a company has a need for 43,000 new lines in a metropolitan area. Using switches with a maximum line capacity of 10,000 or less (or a 4-digit dialing plan), it will require 5 switches to meet this requirement; and if a basic 4-digit dialing plan is used, a DCS arrangement would not be possible. Using a 5-digit dialing plan and switches with a capacity of up to 15,000 lines, this requirement can be met by 3 switches.

Figure 49-17 shows that switches using unrestricted 5-digit dialing and those using prefix digit 5-digit dialing can be used in the same DCS cluster. There are some effects on transparency when this is done. The unrestricted 5-digit dialing nodes form a subnetwork within the DCS. Within this subnetwork, the Extension Number Portability feature functions with full transparency. However, portability between this subnetwork and the other nodes is limited. See the Extension Number Portability feature for a more detailed discussion of this arrangement.

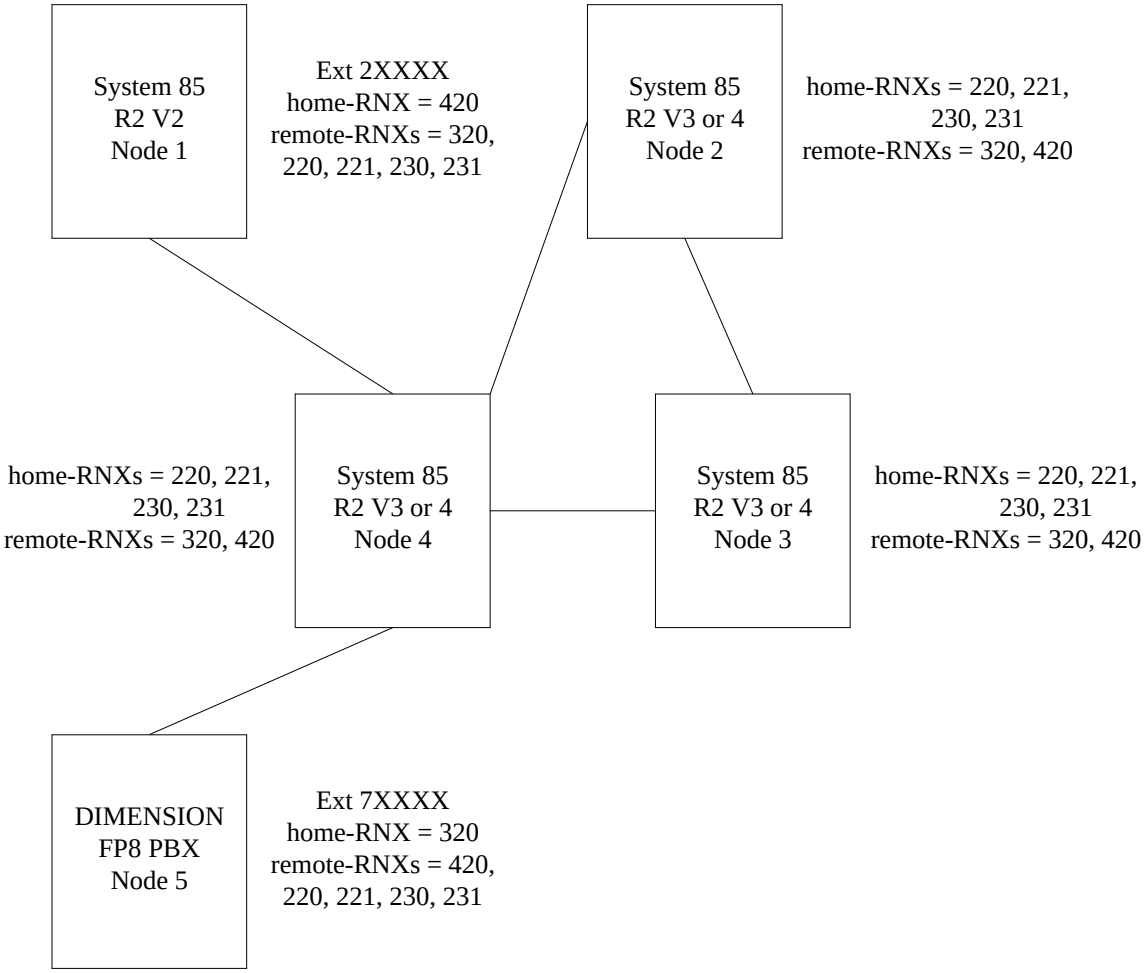

Figure 49-17. Unrestricted 5-Digit Dialing in a DCS Configuration

When prefix digit and unrestricted 5-digit dialing nodes are used in the same network, it may be useful to route AAR patterns for calls within the DCS through a node using unrestricted 5-digit dialing. In this way, unused numbers from prefix digit nodes can be used by the unrestricted dialing nodes. For example, in the illustration shown in Figure 49-17, nodes 2, 3, and 4 form a portability subnetwork within the DCS (see the Extension Number Portability feature for more detailed information on the portability subnetwork). These switches also use unrestricted 5-digit dialing. Nodes 1 and 5 are part of the same DCS but not part of the portability subnetwork, and they use prefix type 5-digit dialing.

In this arrangement, extension numbers originally assigned to nodes outside the portability subnetwork must begin with a 2-digit code that uniquely identifies the node. This applies to nodes 1 (prefix 2X) and 5 (prefix 7X). The remainder of the DCS can use all remaining and otherwise unrestricted extension numbers (some number patterns are set aside for feature and special access codes). Calls originating on node 1 with the prefix 2X are routed by that switch to local processing, and calls originating on node 5 with the prefix 7X are routed to local processing by that switch. All other calls from nodes 1 and 5 are sent via the AAR feature to node 3. At node 3, the switch locates the final destination node via its memory tables (which include extensions located on nodes 1 and 5) and routes the call on from there. Extension numbers in the groups assigned to nodes 1 and 5 cannot be used outside these nodes; however, it is possible to assign extensions not in these groups to these nodes. This would happen when the Extension Number Portability

feature is used. That is, an extension that was originally assigned to node 2 (say 32145) could be ported to node 1 and the system would work satisfactorily. Calls originating anywhere except node 1 would route normally. Calls originating on node 1 would initially route via AAR to node 3 and then be rerouted back to node 1. This would be inefficient (it would use two tie trunks that are not needed); however, if portability is required, it would work. See the Extension Number Portability feature for a more detailed description of how this works.

Other Applications of 5-Digit Dialing

Although 5-digit dialing was initially developed to meet the needs of the DCS customer with more than 10,000 extensions, 5-digit dialing can be used outside a DCS. For example:

- Extension Number Portability

  The Extension Number Portability feature requires that an unrestricted 5-digit dialing plan be used for full, 2-way portability.

- ETN (Electronic Tandem Network)

  An ETN without DCS or an ETN location outside the DCS cluster can also use 5-digit dialing. The 5-digit dialing capability does not require a data link between locations.

Constraints

Some restrictions must be observed. Both 4-digit and 5-digit dialing plans cannot be used in the same cluster. For a cluster with a 5-digit dialing plan, private network calls can be routed using the AAR feature. With a 4-digit dialing plan, a cluster must be configured and administered like a Main/Satellite complex, and private network calls are routed using Extension Number Steering. A more detailed discussion of the DCS feature, ETN networking, and Main/Satellite arrangements can be found in Reference Manual, AT&T IS Network and Data Services, 555-025-200.

Feature History and Development

The DCS feature was first available with System 85 in Release 2, Version 1. Subsequent enhancements have included the following:

- Expanded dialing plan from 4-digit to 5-digit dialing (introduced in Release 2, Version 2)
- Unrestricted 5-digit dialing with extension number portability (first available in Release 2, Version 3).

USER OPERATIONS

The DCS feature is software operated and controlled. There are no user operations as such associated with this feature.

CONSIDERATIONS

Adjunct Processors

Applications Processors and AUDIX (Audio Information Exchange) systems require DCIU links to the local switch. In Release 2, Version 4, and earlies switches, the ports for these links are permanently reserved. In Version 4, flexible port reservations allows these ports to be used for other purposes if not needed for local adjuncts. Therefore, the use of local adjuncts on Version 4 switches reduces the possible number of direct linkage connections to other DCS nodes.

Centralized Messaging

Centralized messaging allows users in a DCS to access AUDIX and MCS (Message Center Service) without requiring each node in the DCS to have an AUDIX adjunct or AP. The operations of centralized messaging are generally transparent to the user.

Centralized messaging is available only when all nodes in the DCS use Release 2, Version 4 switches. Earlier versions *do not* support centralized messaging.

Dialing Plans

The dialing plan must be consistent throughout a DCS cluster. That is, all extension numbers must have either four or five digits.

- With a 4-digit dialing plan, all switches must be arranged in a Main/Satellite configuration.
- With a 5-digit dialing plan:

  For DIMENSION System and System 85 switches earlier than Release 2, Version 3:

  a. The first two digits (ten-thousands and thousands digits) of an extension number must identify a single node within the cluster.

  b. More than one node may have the same first or second digit as long as both digits are not duplicated on any two nodes.

MCS (Message Center Service)

Centralized Message Center Service: Centralized Message Center Service is available for System 85, Release 2, Version 4 switches. With centralized service, message center is fully transparent.

Release 2, Version 3 Switches and Mixed Clusters: For DCS clusters using System 85, Release 2 switches earlier than Version 4, basic message center services (i.e., receiving incoming calls and taking messages for a principal) function in a transparent manner. However, if the principal is not located on the same node as the message center AP, the message waiting lamp cannot be used to alert the principal that a message has been received. Also, Unified Messaging Services, Demand Print, and Display—Voice Terminal retrieval functions are not available if messages are not stored on the node where the principal's extension is located.

Network Channel Priority

Network channels are assigned a priority (either high or low) in Procedure 257, Word 1. This priority is used by the DCIU any time that contention exists for message processing. If this should happen, high priority network channels are serviced first. In assigning priority to network channels, consider that a message on an alternate routing network channel or one that is being hopped through the DCIU from an incoming DCIU link to an outgoing DCIU link has been in transit for some time already and may be in danger of timing out.

Private Network Trunks

Private network trunks and trunk groups must be numbered identically at all nodes. If a DCS cluster uses AAR to route private network calls, private network trunk groups should not overflow to public network trunk groups.

Terminal Class-of-Service

Terminal class-of-service assignments should be identical at all nodes. That is, class-of-service ‘‘1’’ should have the same permissions and restrictions on all nodes in a DCS cluster.

Tie Trunks

Tie trunks connecting two nodes must be assigned the same trunk-group number and trunk numbers at both nodes. For example, a tie trunk (connecting nodes A and B) assigned to trunk group 55, trunk 12 at node A, must also be assigned as trunk group 55, trunk 12 at node B.

The following trunk types should **not** be used to interconnect the nodes of a DCS cluster.

- 2-way automatic in and dial repeating out (trunk type 38)
- 2-way automatic in and automatic out (trunk type 39)
- 2-way dial repeating delay dial in and automatic out (trunk type 45)
- 2-way immediate start both ways (trunk type 72).

INTERACTIONS WITH OTHER FEATURES

Feature Transparency

The backbone of the Distributed Communications System is transparent feature operation. A feature is transparent when the user cannot detect any difference between the way a feature works in the DCS environment and in the single switch mode.

Unfortunately, feature transparency is not consistent. This is because some switches that can function in a DCS have different capabilities, and the same features work differently on these switches. Transparency, cannot be assured unless every switch in the DCS is of the same type and version.

NOTE: Unless otherwise stated, these interactions are based on the use of System 85, Release 2 switches. Interactions with other types of switches in the same DCS network may differ.

Abbreviated Dialing

Transparent for System 85, Release 2 switches. Abbreviated Dialing is not transparent to a DIMENSION System, FP8, Issue 3 switch. Speed Calling (the equivalent DIMENSION System feature) is not transparent.

Attendant Call Waiting

Transparent for System 85, Release 2 switches.

Attendant Control of Trunk Group Access

When used on tie trunks between nodes of a DCS, this feature has the effect of disrupting transparency for all features (including normally transparent features) between these nodes. Instead of the call progressing as expected (according to the transparent feature invoked), the call routes to Intercept Treatment. To control a trunk group from a distant node, the attendant must use a Direct Trunk Group Selection button.

Attendant DXS (Direct Extension Selection)

Neither the Attendant DXS feature nor Extended DXS works if a 5-digit dialing plan is in effect.

This feature is not transparent for calls between a System 85 and a DIMENSION System node regardless of the dialing plan used.

Attendant Display

For the calling number display attribute of the Attendant Display feature to be useful, attendant consoles must be of the 8-character alphanumeric display type. On a console with a 4-character alphanumeric display, only the first (leading) four digits of a 5-digit extension number are shown.

The class-of-service and ICI (Incoming Call Identification) displays work transparently with either 4-character or 8-character attendant consoles.

AUDIX (Audio Information Exchange)

The basic AUDIX function is transparent in a DCS. That is, a caller can be routed to AUDIX and leave a message, without regard to what switches are involved in the connection. Other functions, (i.e., Leave Word Calling on AUDIX, call back, and call transfer out of AUDIX) will differ depending on what versions of the switch are used.

Automatic Callback

Transparent for System 85, Release 2 switches.

ACD (Automatic Call Distribution)

In a DCS environment, direct attendant calls and attendant extended calls to an ACD or EUCD split (or a UCD or DDC group) on another node are queued like any other incoming ACD call. The attendant does not receive confirmation tone to show that the queue has been entered.

ACA (Automatic Circuit Assurance)

In a DCS environment with as many as 40 nodes, attendant consoles can be concentrated at one node. When an attendant at this node activates or deactivates the ACA feature, the feature is activated or deactivated for every switch in the DCS. In a DCS environment, the operation of ACA is similar to the operation in a non-DCS environment. However, the initial alphanumeric display to identify a faulty trunk is different. In addition to the usual information, the initial display shows dial access code of the tie trunk involved in the ACA referral call.

In a DCS, trunk groups that require the use of the ACA feature across DCS nodes cannot have 4-digit dial access codes.

Busy Verification of Lines

Transparent for System 85, Release 2 switches.

Call Coverage

Coverage points in a coverage path for a principal must be located on the same node as the principal. The calling terminal from a remote System 85 node, however, is treated as a local caller. That is, the call covers according to internal coverage criteria, and single-burst ringing is applied. This is not true when a DIMENSION System switch is involved.

The Call Coverage feature is not transparent between DIMENSION System (FP8, Issue 3) and System 85 nodes. The Caller Response Interval and Coverage Tone are not given. Also, the call covers according to external coverage criteria even though the call is internal to the DCS environment. All coverage points in a coverage path must be located on the same node (DIMENSION System) as the principal.

Call Forwarding—Busy and Don’t Answer

Not transparent. The forwarded-to extension cannot be an extension on a distant node. This feature is not transparent to or from a DIMENSION System, FP8, Issue 3 switch.

Call Forwarding—Don't Answer

Not transparent. The forwarded-to extension cannot be an extension on a distant node. This feature is not transparent to or from a DIMENSION System, FP8, Issue 3 switch.

Call Forwarding—Follow Me

If a call is forwarded from node A to node B, activation of Leave Word Calling is denied toward the originally called voice terminal on node A. ACD and EUCD splits can use Call Forwarding—Follow Me between nodes of a DCS (Overload balancing, also known as Interflow, is available for this purpose). This includes the use of ACD splits as gateways to the Message Center and AUDIX features.

Call Vectoring

A ''route to'' command can be used in vector processing to route calls to a distant DCS node. Beyond this functionality, no DCS transparency is provided. System 85 does not provide message correspondence over DCIU links that is unique to Call Vectoring. ''queue to main split'' and ''check backup split'' commands can only be applied to ACD splits within the local DCS node.

Given these limitations, ''route to'' commands could be used to route calls to an associated extension number or VDN at a distant DCS node. The distant associated extension number or VDN can, in turn, terminate to a centralized AUDIX or Message Center queue.

Call Waiting

Transparent for System 85, Release 2 switches.

CAS (Centralized Attendant Service)

Attendants serving several DCS nodes can all work at one location and still provide a wide range of services. For attendant features to work transparently, there must be at least one direct tie trunk between the attendants location and each unattended node.

Conference—Three Party

Transparent for System 85, Release 2 switches.

DDC (Direct Department Calling)

Not transparent. Interactions are the same as the ACD interaction.

Direct Trunk Group Selection

Transparent for System 85, Release 2 switches.

Display—Voice Terminal

Transparency is available for incoming calls **only if all switches** involved in the connection are System 85 Release 2, Version 2 or later. The display will show the name of the calling party as though the call had originated on the local switch.

Outgoing calls, however, do not provide DCS transparency unless all switches involved are Release 2, Version 4. For other switches, the display will show the trunk connection used rather than appearing as a dialed extension.

Extension Number Portability

This feature was designed to work in a DCS; however, it is applicable only to System 85 Release 2, Version 3 nodes. In a mixed DCS cluster, full portability is limited to a subset of the full cluster called the Portability Subnetwork. See the Extension Number Portability feature for a more detailed description of this limitation.

When Extension Number Portability is used in a DCS, it is not readily apparent on which node a particular extension number resides. Users should be aware of all ported extension numbers so they do not try to use nontransparent features toward these extension numbers.

EUCD (Enhanced Uniform Call Distribution)

Not transparent. Interactions are the same as the ACD interaction.

ISDN (Integrated Services Digital Network)/PRI (Primary Rate Interface)

A DCS arrangement can be set up using either ETN (Electronic Tandem Network) or Main/Satellite, trunking arrangements. The ISDN/PRI feature is compatible with ETN trunking arrangements but not with the Main/Satellite configuration.

This *does not mean* that a DCS with a Main/Satellite configuration cannot be connect to an ISDN. It does

mean the ISDN facilities cannot be used between the Main and Satellite switches. The reason for this is that a Main/Satellite arrangement uses Extension Number Steering. **Extension Number Steering** cannot handle ISDN message processing and the required facilities oriented pattern searches. The AAR (Automatic Alternate Routing) and ARS (Alternate Route Selection) features with **generalized route selection** are needed for the route and pattern discrimination required by ISDN call processing.

In a DCS, ISDN/PRI trunking can be used between nodes that are arranged as an ETN. Conventional (non-ISDN) trunking must be used for any Main/Satellite connections. ISDN service can be provided to the Main (assuming the Main is a Release 2, Version 4 switch) but not between the Main and any Satellite switch(es). Interworking at the Main will take care of call processing services for ISDN calls originating (or terminating) on a Satellite station. Figure 49-18 illustrates the various DCS/ISDN/PRI connectivity arrangements.

Last Extension Dialed

Transparent for System 85, Release 2 switches.

LWC (Leave Word Calling)

For System 85 switches prior to Release 2, Version 4, a message can only be retrieved from the node where it is stored. The message indication sent by the System 85 (i.e., light the MESSAGE lamp) can only be sent to a voice terminal on the same switch. A message waiting signal cannot be sent to another node. If the attendant extends a call to an extension on another node, Leave Word Calling cannot be used (also see Call Forwarding—Follow Me and Transfer).

For DCS networks with all nodes System 85, Release 2, Version 4, the ES message set provides centralized messaging and feature transparency for messaging services including LWC.

Leave Word Calling is not transparent to or from a DIMENSION System, FP8, Issue 3 switch.

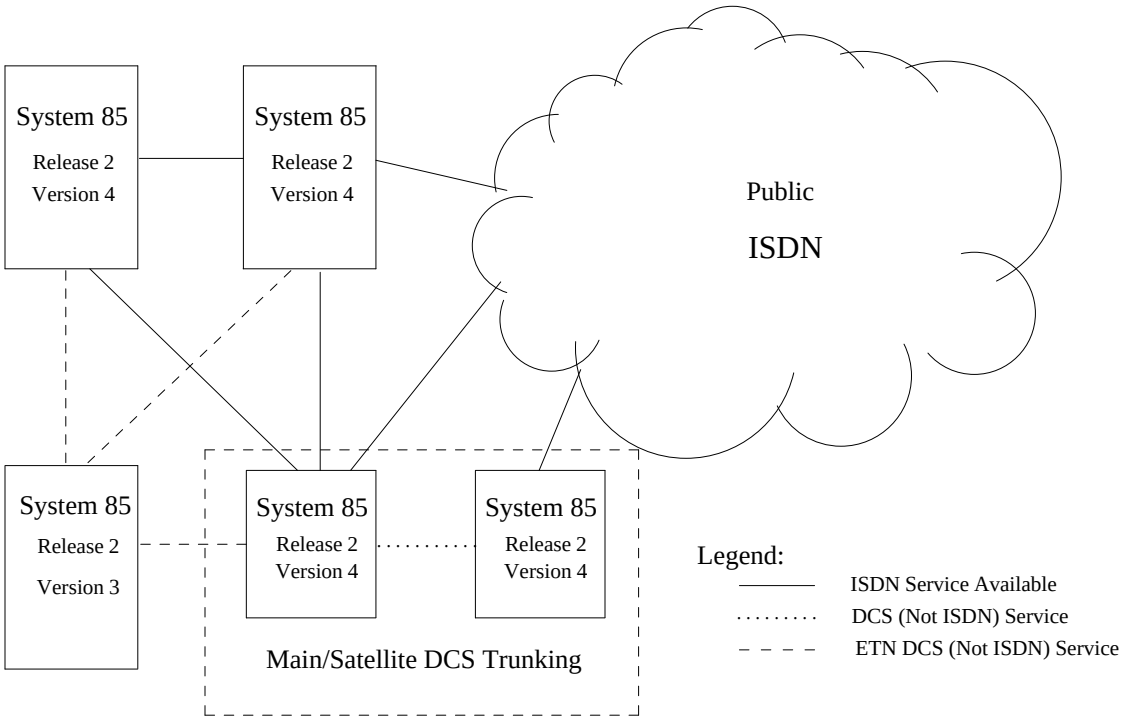

Figure 49-18. DCS/ISDN Network Connectivity

Malicious Call Trace

If a malicious call originates from a voice terminal from within the DCS network, the ICI display on the controlling attendant console displays the extension number of the calling voice terminal. Beyond this functionality, DCS transparency is not provided for the Malicious Call Trace feature.

A voice terminal user cannot activate Malicious Call Trace unless an attendant is in the same DCS node as the user. Also, a third party cannot activate the feature unless the third party is in the same node as the user.

When Malicious Call Trace is activated in a DCS environment, every System 85 attendant in the local DCS node is alerted to trace the call.

Override

The Override feature works only on the local switch in a DCS. If directed toward an extension on a distant DCS node, the caller attempting to use override receives intercept treatment.

Priority Calling

Transparent for System 85, Release 2 switches.

Restriction—Attendant Control of Voice Terminals

Once applied, Attendant Control of Voice Terminals restrictions work in a transparent manner from the voice terminal user's perspective. However, these restrictions must be activated and deactivated by a local attendant. Pooled or centralized attendants cannot activate or deactivate these restrictions for voice terminals on a distant DCS node.

Restrictions—Voice Terminal Restrictions

This feature is transparent in a DCS environment from the voice terminal user's point of view. That is, a voice terminal restriction, such as inward restriction, applies to the DCS rather than just to the local switch. These restrictions are applied through class-of-service and must be applied uniformly throughout the DCS. They must be separately administered to each switch within the DCS.

Ringing—Distinctive Ringing

Transparent for System 85, Release 2 switches.

DCS (Distributed Communications System)

A partitioned System 85 can serve as an endpoint in a DCS cluster. As long as the partitioned switch is serving as an endpoint, an extension partition and an optional attendant partition within the partitioned switch can access the tandem node over dedicated trunk groups. However, a partitioned System 85 should not serve as a tandem node. When this is done, the tandem does not provide trunk-to-trunk partitioning to the public or private network.

When DCS is used in conjunction with Tenant Services, be careful to ensure that the tenant's organization can access the dedicated DCS trunk group at both ends. Otherwise, DCS feature transparency is degraded. As an example, when a voice terminal user at Node A activates Call Forwarding toward a voice terminal in Node B, the activation is accepted by Node A with confirmation tone. However, if both ends of the tie trunk cannot be accessed by the same tenant organization, an call to the user at Node A will fail during the forwarding process. Meanwhile, the calling party receives the usual forwarding display and the forwarding party receives ring-ping.

Allowing a *single* partitioned System 85 to serve as an endpoint in *multiple* DCS clusters can be difficult to implement. Within the partitioned switch, each extension partition must have unique extension numbers. Moreover, the endpoint partition's extension numbers must likewise be unique in its DCS cluster. Also, the DCS tie trunks must have the same trunk-group numbers and trunk numbers at both ends.

Transfer

After an internode call is transferred, activation of Leave Word Calling is denied.

Trunk Group Busy/Warning Indicator to Attendant

Transparent for System 85, Release 2 switches.

Trunk Verification—Attendant

This feature is transparent for System 85, Release 2 switches. However, the procedures for verifying distant trunks are slightly different than the usual verification procedures (see the Trunk Verification—Attendant feature.)

UCD (Uniform Call Distribution)

Not transparent. Interactions are the same as the ACD interaction.

Variable Format Call Detail Recording

A data item is provided in the CDR record that contains the DCS node number. Therefore, if necessary, subsequent accumulation of records from numerous switches carry an identifying field from which a multinode call can be reconstructed. This field contains the value of the node number assigned in Procedure 275, Word 3.

HARDWARE REQUIREMENTS

Specific hardware requirements for the DCS feature include a DCIU with appropriate interconnecting cables at each switch and appropriate modems. The following DCIUs are available:

- DCIU, Release 1. Applicable to DIMENSION System switches and System 85 switches earlier than Release 2, Version 2.
- DCIU, Release 2. Applicable to System 85 Release 2, Version 2 and later switches.

FEATURE ADMINISTRATION

Assignment of the DCS feature is on a per-system basis.

The customer can partially administer this feature using the SMT (System Management Terminal), TCM (Terminal Change Management) feature, or FM (Facilities Management) feature. This feature can also be administered using CSM (Centralized System Management).

The following are the applicable MAAP and SMT procedures.

MAAP AND SMT PROCEDURES DISTRIBUTED COMMUNICATIONS SYSTEM			
PROCEDURE	**WORD**	**PURPOSE**	**SMT**
010	1,2,3,4	Assigns features and restrictions (including Call Forwarding —Off Net and miscellaneous trunk restriction groups) to a class of service for a voice terminal.	Yes
100	1	Administers the trunk type and queuing parameters for a trunk group.	No
101	—	Administers trunk-group characteristics for trunk groups administered in Procedure 100, Word 1.	No
102	—	Assigns trunk groups (using dial access codes) to Miscellaneous Trunk Restriction groups.	Yes
103	—	Administers network trunk-group parameters including: FRL, authorization code requirements, incoming tie trunk access to AAR or ARS, and AAR prefix requirements.	Yes
104	1 & 2	Administers Main/Satellite parameters to a DCS cluster with a 4-digit dialing plan.	No
116	1	Administers DS1 and ISDN trunk assignments.	No
150	—	Assigns the equipment location of a DCS trunk to its trunk-group number.	No
202	2	Assigns the desired Direct Trunk Group Selection buttons to the attendant console(s) and sets the BUSY/WARNING level for a trunk group.	No
256	1	Administers the DCIU link characteristics.	No
256	2	Administers BX.25 level 2 timers and counters for the DCIU Link.	No
256	3	Administers BX.25 level 3 timers and counters for the DCIU Link.	No
257	1	Administers the components, priority, and alternate routing status of the DCIU network channels.	No
257	2	Administers DCIU ports for the network channels.	No
257	3	Administers DCS node and trunk group assignments.	No
257	4	Administers the alternate routes associated with a destination map.	No
258	1	Copies translation changes made using Procedures 256 and 257 to working tables.	No
258	2	Refreshes the DCIU temporary translation tables before using Procedures 256 and 257.	No

MAAP AND SMT PROCEDURES DISTRIBUTED COMMUNICATIONS SYSTEM (Contd)			
PROCEDURE	**WORD**	**PURPOSE**	**SMT**
275	1	Assigns DCIU to the system class of service.	Yes
275	3	Associates the first digit of a 5-digit dialing plan with a branch (switch) number for a DCS cluster in systems earlier than R2 V3. In R2 V3, assigns DCS switch number and number portability.	Yes
322	1	Associates the first two digits in a 5-digit dialing plan to a location code (RNX) in a portability subnetwork. A 2-digit combination is limited to a single location code or node number; however, the same location code can be associated with more than one 2-digit combination.	No
350	1	Assigns the first digit of the dialing plan for both dial access codes and extension numbers. It also specifies the number of digits required.	No
350	2	Assigns the feature dial access codes.	No
354	1	Administers blocks of extension numbers for a 4-digit or 5-digit dialing plan. A 4-digit dialing plan uses extension number steering; therefore, set Field 3 to ‘‘1’’ (extensions to dial access codes only). In 5-digit dialing plans for R2 V3, this procedure is also used to identify the the node where the extension number resides in a portability subnetwork.	No
354	2	Assigns an extension number or an extension number steering code to a dial access code. Also associates a location code or dial access code for a trunk group to a distant DCS node. This latter function is done in Procedure 355 for R2 V2 and earlier systems.	No

Because of major changes introduced in Release 2, Version 4 some new or significantly changed MAAP (Maintenance and Administration Panel) and SMT (System Management Terminal) procedures are required for the DCS feature. The following apply specifically to Version 4.

MAAP AND SMT PROCEDURES DISTRIBUTED COMMUNICATIONS SYSTEM, Release 2, Version 4			
PROCEDURE	**WORD**	**PURPOSE**	**SMT**
256	1	Assigns DCIU link characteristics. Because of flexible DCIU port reservations, for R2 V4 ranges for Field 8, Destination Machine Number change to the following: Range — Use 1 — 7 — AP 1 — 8 — AUDIX 1 — 63 — DCS Node	No
257	5	Administers the DCIU port reservations.	No
257	6	Associates tables containing the correlations between the ES ports, network numbers for APs, AUDIXs, and DCS nodes.	No
261	1	Correlates the internal AP or AUDIX number (Fields 1 and 2) with the network AP or AUDIX number (from 1 to 99, in Field 7).	Yes

The following is the applicable TCM path name used with the AP 16.

TCM SCREEN — DISTRIBUTED COMMUNICATIONS SYSTEM	
PATH NAME	**PURPOSE**
terminal-change system parameters	Assigns the local prefix digit (the first digit in the 5-Digit Dialing Plan). This parameter is on the ‘‘access-codes’’ screen.

The following is the applicable FM path name used with the AP 16.

FM SCREEN — DISTRIBUTED COMMUNICATIONS SYSTEM	
PATH NAME	**PURPOSE**
facilities-mgmt dciu link-assignments	Generates a report of the DCIU link assignments that includes the endpoint type (Applications Processor or switch) and the data rate for each link.

The following are the applicable CSM Command Paths utilizing the **admin** area of TCM or FM.

CSM SCREENS — MASKS DISTRIBUTED COMMUNICATIONS SYSTEM		
APPL'N	**OBJECT**	**PURPOSE**
TCM	class-of-service	Assigns features and restrictions (including Call Forwarding — Off Net and miscellaneous trunk restriction groups) to a class of service for a voice terminal.
FM	trk-grp	Administers trunk type, queuing parameters, and characteristics for a trunk group. Assigns trunk groups (using dial access codes) to Miscellaneous Trunk Restriction groups, and assigns the equipment location of a DCS trunk to its trunk-group number. Administers network trunk-group parameters including: FRL, authorization code requirements, incoming tie trunk access to AAR or ARS, and AAR prefix requirements.
FM	main-satellite	Administers Main/Satellite parameters in a DCS cluster. The extended trunk access trunk group must be a main/satellite trunk group which must be defined in the network.
FM	dciu	(System 85 R1 through R2 V3) Administers DCIU link characteristics, and BX.25 level 2 and level 3 protocol characteristics, local role, baud rate, and link name. (System 85 R2) Changes to DCIU levels 2 and 3 BX.25 protocol are **not** recommended.
	dciu	(System 85 R2 V4) Assigns DCIU link characteristics. The DCIU links are flexible with the R2 V4 switch. Enhanced services ports allow DCIU links to be provided not only from a switch processor to a local adjunct processor, but to remote adjunct processors. This means that switches without local AUDIX capabilities can access Centralized Messaging and remote AUDIX.

CSM SCREENS — MASKS DISTRIBUTED COMMUNICATIONS SYSTEM (Contd)		
APPL'N	**OBJECT**	**PURPOSE**
FM	dciu-route-codes	Administers alternate route codes assigned to a specific destination routing code. The codes are used to route messages between the DCIU and adjunct processors, i.e., AUDIX, AP, or another DCIU in a DCS network. This command also specifies the routing type (fixed routing or route-on-failure), and administers the DCIU port reservations. The enhanced services port is assigned and is associated with a network class, an AP, AUDIX, or DCS.
TCM/FM	external-adjunct	(System 85 R2 V4) Administers three new data items used for Centralized Messaging and flexible DCIU port reservation. The three items are: Network adjunct class (AP, AUDIX, or DCS), Network adjunct number, and the associated extension number for the AUDIX machine.
TCM/FM	sys-cos	Assigns DCIU to the system class of service. Associates the first digit of a 5-digit dialing plan with a branch (switch) number for a DCS cluster in systems earlier that R2 V3. In R2 V3 and later, assigns DCS switch number and number portability.
FM	portability-routing	Administers the first and thousandth digit to a location code (RNX), which is needed for administering Station Number Portability on a number portability network.
TCM/FM	first-digit	Assigns the first digit of the dialing plan for both dial access codes and extension numbers. Specifies number of digits required.
TCM/FM	dial-access-codes	Assigns the feature dial access codes. (System 85 R2 V4) The dial access code can be up to four digits long.

CSM SCREENS — MASKS DISTRIBUTED COMMUNICATIONS SYSTEM (Contd)		
APPL'N	**OBJECT**	**PURPOSE**
TCM	number-groups	Administers one or more extension number groups to the dialing plan, and makes the extension numbers added available for assignment or reservation. (System 85 R2 V3, V4) The node number representing the switch where the number group will reside is also administered.
TCM	dac-to-extension	Creates an association between an extension or steering code and a DAC.
FM	station-no-steering	(System 85 R2 V3 and V4) Creates an association between an extension and an office location code (RNX). When an extension is associated with an RNX, the extension is then in a steering state.

DCIU Administration

Administration of the DCIU involves some complex considerations. For a detailed discussion of this issue, and some typical administration recommendations, see Appendix D of this manual.

ENHANCED UNIFORM CALL DISTRIBUTION

DESCRIPTION

The EUCD (Enhanced Uniform Call Distribution) feature permits incoming trunk calls, local voice terminal calls, and attendant extended calls to terminate to an idle voice terminal in a group of terminals. The answering positions appear as normal voice terminals to the switch and are also able to place and receive calls in the usual manner. This feature can provide an economical alternative to Direct Inward Dialing for departments that receive a high volume of similarly natured calls. Selected terminal users (agents) can be organized into a split (collection of agents) to allow for balanced call distribution to the agents.

The EUCD call distribution routines serve as the gateway to Message Center, with the Message Center agents residing in an EUCD split. This balances the call distribution to Message Center agents. All of the following EUCD functions can be applied to EUCD splits containing Message Center agents.

The EUCD call distribution routines also serve as the gateway to AUDIX (Audio Information Exchange), allowing effective use of the AUDIX facilities. Appropriate EUCD functions (e.g., recorded announcements and music on hold for callers) can be applied to the AUDIX gateway.

To assist in conceptualizing this feature, a sample EUCD arrangement is depicted in Figure 50-2.

Feature History and Development

The EUCD feature was provided in Release 2, Version 2 to enhance the functionality provided by the UCD (Uniform Call Distribution) and DDC (Direct Department Calling) features.

The EUCD feature was itself replaced and enhanced by the ACD feature in Release 2, Version 3. The following feature description is meant to serve as a reference source for those using the Release 2, Version 2 software package.

> **NOTE:** Refer to Appendix B for a tabular comparison of the various call distributors provided in System 85, Release 2.

General Usage

A published number is linked to an EUCD split by associating the published number with the extension number of the first terminal in the split. The controlling or primary terminal for the split (the split supervisor's terminal) is the first terminal in the split's list.

The switch directs incoming calls for a published number to the split's queue. Two kinds of hunting are available to extend the call to an idle agent: linear (also called direct) and circular. Linear hunting always

starts with the first agent (split supervisor) and hunts toward the last member. Circular hunting starts where the hunting process left off during the previous scan and continues through the list of agents. After checking the final member of the list, circular hunting again returns to the first member of the list and continues in a circular fashion. Linear hunting is used for applications where a priority series of answering positions is desired. Circular hunting is useful for applications, such as order taking or Message Center, where an evenly balanced call distribution is necessary.

> **NOTE:** Linear hunting provides the call-distribution algorithm that was formerly provided by the DDC (Direct Department Calling) feature. Circular hunting provides the call-distribution algorithm that was formerly provided by the UCD (Uniform Call Distribution) feature.

Each terminal (including the split supervisor's terminal) in an EUCD split can receive calls either as a split member or as an individual terminal. For internal calls, unique EUCD split extension numbers, called associated numbers, identify the split. For incoming calls, the EUCD split is associated with incoming trunks. For automatic-in type trunks, the call routes to the assigned EUCD split. For dial repeating type trunks, the call routes to the split dialed. This is similar to the way DID calls complete to individual terminals (including individual EUCD split members). One of the associated numbers and any number of the incoming trunk groups may receive a priority designation. Priority calls are placed at the top of the queue or behind priority calls which are already in queue. A nonpriority call enters the queue behind all other calls.

An example of priority queuing is shown in Figure 50-1. Within this figure, the priority calls are *lettered* and the nonpriority calls are *numbered*. One associated extension number (the maximum) and two trunk groups are delivering incoming calls to the end of the priority portion of the queue. Meanwhile, two associated extension numbers and two trunk groups are delivering incoming calls to the end of the nonpriority portion of the queue. Each call is distributed from the head of queue (currently, Call A) to an available agent in Split 29.

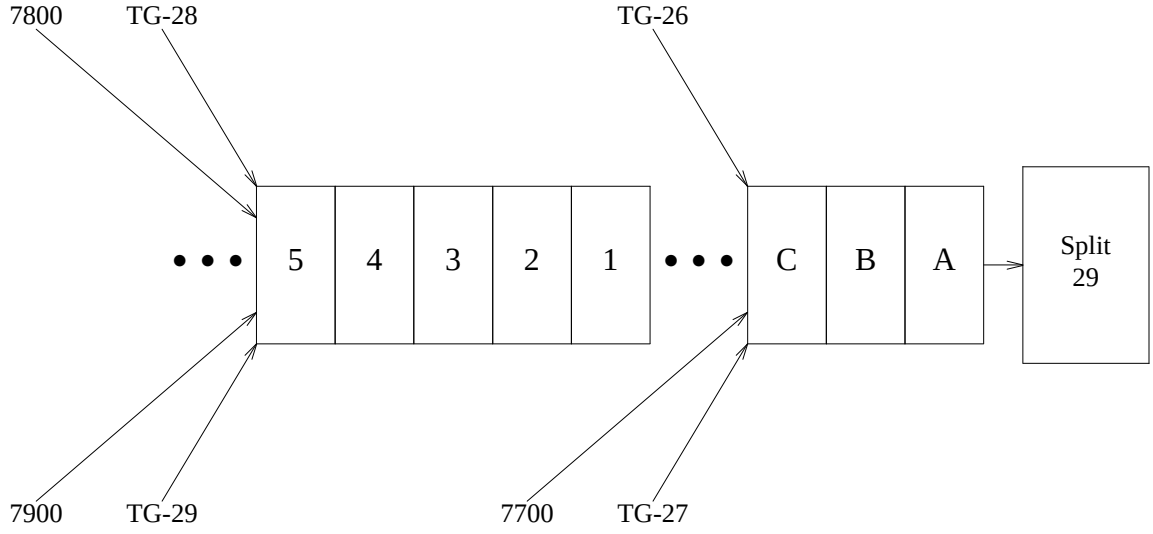

Figure 50-1. EUCD Priority Queuing

Methods of Routing Incoming EUCD Calls

As previously mentioned, there are two ways to route incoming ACD calls to the System 85 switch. These two methods include:

- Dial-repeating type routing

  Using this method, an associated extension number's digits are passed through the serving switch (usually, the serving Central Office) and to the local System 85 in a similar manner to the way that DID calls are routed. As the associated extension number's digits are analyzed by the System 85's call-processing software, the dialed number is recognized as a number that terminates to a specific split's queue. In turn, the call-processing software gives control of the incoming call to EUCD processing.

- Automatic-in type routing

  Using this method, an EUCD call is recognized by the serving switch (usually, the serving Central Office) as a call that is routed to the local System 85 over a specific trunk group. In turn, the local System 85 accepts the call from over the trunk group, and recognizes the call as assigned to terminate to a specific split's queue. This method of routing resembles ''non-DID routing'' to the attendant queue. In fact, ''attendant completing'' trunk groups are often used for automatic-in type routing of EUCD calls. Automatic-in type trunk groups are assigned as type ''attendant-completing in'' or ''automatic in'' in Procedure 100, Word 1 and then assigned to terminate to an EUCD split in Procedure 115.

Outgoing Calling by EUCD Agents

This EUCD feature description primarily focuses on EUCD from the perspective of incoming calls. However, especially when EUCD is applied to address the needs of a telemarketing organization, agents can also devote significant effort placing outgoing calls (e.g., to solicit sales). In this environment an EUCD manager is also concerned with the costs of outgoing calling. Although the EUCD feature does not directly address these concerns, a number of coresident features on System 85 do.

As previously mentioned, EUCD agents in addition to receiving calls distributed from a split's queue, are able to place and receive calls in the usual manner. Given this ability, EUCD agents have the same access as other System 85 users to the least-cost-routing capabilities of the ARS (Automatic Route Selection) and AAR (Automatic Alternate Routing) feature. Indeed, the switch administrator can control the costs of ACD outgoing calling with the *same* methods that costs are generally addressed on System 85 R2 V2.

Lamp Monitoring of EUCD Agents

Display units (106B) can be provided to show the current activity of 20 EUCD agents. For each agent, the unit displays one of the following agent states.

- The agent is available to handle an EUCD call. [First lamp (top)]
- The agent is handling an EUCD call. [Second lamp]
- The agent is engaged in after call work. [Third lamp]
- The agent is in the Aux-Work mode. [Fourth lamp]
- The agent is not engaged in work-related activity (receiving a personal call or placing a call). [Fifth lamp (bottom)]
- The agent's position is in the Unstaffed mode. [All lamps off]

Answer Supervision

Answer supervision is a signal sent by System 85 to the serving CO (Central Office) indicating that an incoming call has been answered. Upon receiving this signal, the originating CO (generally) begins tracking toll charges for the call (if charges apply). For EUCD calls to System 85 which enter a queue before being answered, answer supervision must be returned (at the latest) either just before an agent actually answers or just before the first recorded announcement (if provided), whichever comes first. This is the *preferred operation* provided on a system-wide basis when Field 12 of Procedure 275, Word 4 is set to ''1.''

When this field is left with the default entry ''0,'' System 85 returns answer supervision for EUCD calls at the time each call first enters queue. Since billing is for a longer period of time, this operation would result in higher toll charges for the customer (when 800 Service is used) and/or for each calling party.

Answer Supervision and Abandon Call Search

As discussed, the switch returns answer supervision to the serving CO either at the time an incoming call first enters the split's queue or just prior to connecting the call to the first recorded announcement. However, after answer supervision has been returned, ''ghost calls'' can occur if the calling party abandons the call.

A ghost call occurs whenever an agent answers a call *after* the calling party hangs up, but *before* the CO returns the disconnect signal to the System 85. Primarily depending on the type of CO, the delay in returning disconnect is on the order of 2 to 25 seconds. If a ghost call were to occur, an ineffective call would be distributed to an agent. Also, as if the agent had received an actual EUCD call, the agent would be inappropriately credited with an EUCD call and bypassed for distribution of subsequent EUCD calls.

To minimize this problem, abandon call search can be assigned to the switch (Procedure 275, Word 4). When abandon call search is assigned, the switch checks incoming CO, 800 Service, and FX trunks just before ringing an idle agent. If the trunk is found to be on-hook at the CO, the switch releases the trunk. If the trunk is active, the switch distributes the call to the idle agent.

> **NOTE:** It is recommended, whenever processor occupancy allows, that abandon call search be assigned to the switch.

Split Supervision

Supervision of an EUCD split is primarily provided by a split supervisor. The split supervisor may be an experienced agent who performs agent training duties, serves as a consultant to the group of agents, and regulates the split's operation. In addition to the usual agent capabilities, the split supervisor is able to:

- Observe agent performance using agent override
- Add or remove agents to/from the split

- Verify the split's recorded announcement
- Activate or deactivate Call Forwarding for the split
- Activate or deactivate Overload Balancing for the split
- Turn of the reload warning lamp after a tape reload by the switch.

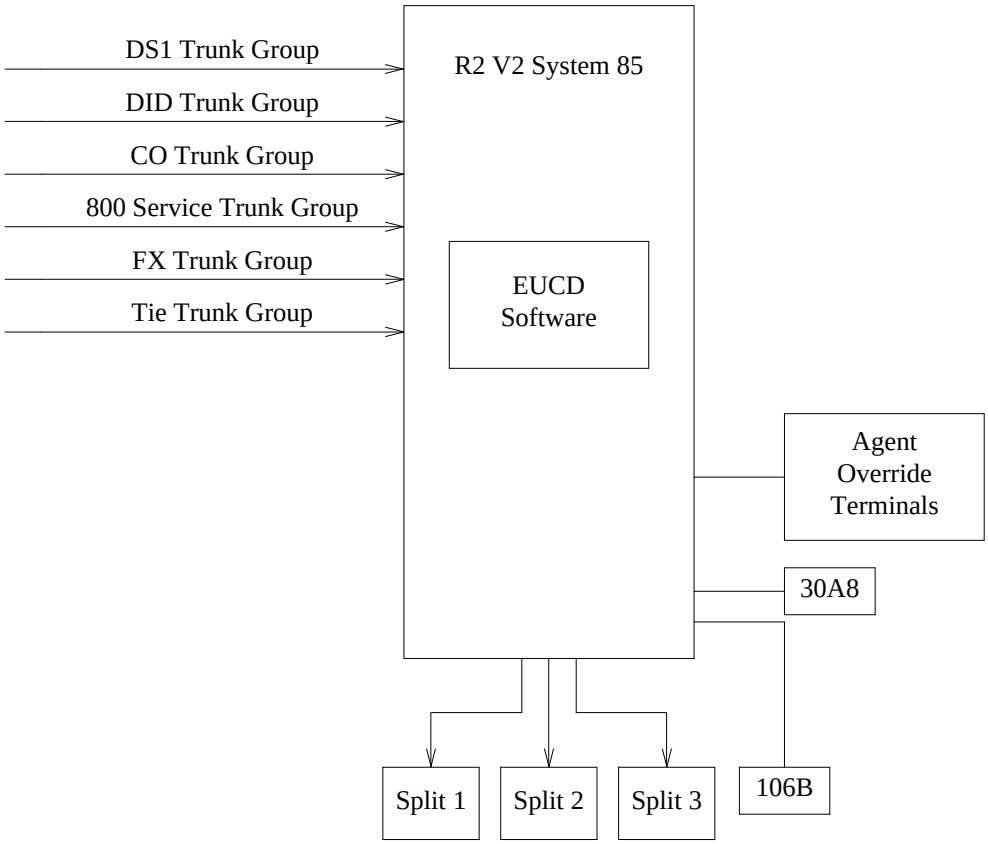

Figure 50-2. Simplified Pictorial of an EUCD Arrangement

Also, one local attendant can be designated as the system supervisor. This attendant console cannot perform agent duties, but may perform the following tasks:

- Activate or deactivate Call Forwarding for a split
- Turn off the reload warning lamp after a switch tape reload.

Intraflow and Interflow

Intraflow, redirection of EUCD calls to a local destination, and interflow, redirection of EUCD calls to a distant network node, are available to increase call-distribution flexibility. Call forwarding is used as the software mechanism for intraflow (local redirection), while overload balancing is used as the mechanism for interflow (distant redirection). *Both intraflow* and *interflow* can operate in two ways: *threshold* redirection and *unconditional* redirection (redirection of *all* calls). Threshold redirection is used to divert EUCD calls during a heavy call load. Unconditional redirection is used to divert all calls when an EUCD split is inactive.

> **NOTE:** When interflowed EUCD calls use the AAR or ARS feature to route these calls outside the local switch, the FRL of the split's supervisor is used to determine whether these calls can use the available network facilities.

''Chaining'' of Destinations for Intraflow—All

When Intraflow—All is activated, the split can have as many as three local destinations (e.g., an extension, the attendant group, or another EUCD split) for unconditional redirection of EUCD calls. These destinations are arranged in a priority scheme by order of activation. If the first destination is unavailable, the switch checks the second and third destinations (while the call *remains* in the first split's queue). Of these three destinations, only the last destination should either be another EUCD split or the attendant group (i.e, be accessed by a queue).

> **NOTE:** When a destination before the last destination has a queue, the call unconditionally enters the queue, and subsequent destinations are never checked.

If an unconditionally intraflowed call enters an EUCD queue, and this queue *also* has Intraflow—All active, the call will recursively intraflow again. This time, the call intraflows to one of the new split's destinations.

If an unconditionally intraflowed call enters an EUCD queue, and this queue has Intraflow—*Threshold* active, the call will not intraflow again. Instead, this call is marked as ''Intraflow—Threshold Not Allowed,'' and must be answered by an agent in this split.

No ''Chaining'' of Destinations for Intraflow—Threshold

There can also be three local destinations (e.g., an extension, the attendant group, or another EUCD split) for threshold redirection of EUCD calls. These destinations are arranged in a priority scheme by order of activation. If the first destination is unavailable, the switch checks the second and third destinations (while the EUCD call *remains* in the first split's queue). All three of these destinations can be EUCD splits (i.e., accessed by a queue). When the inflow parameter at a receiving split is met, the switch executes the intraflow operation and marks the call as ''Intraflow—Threshold Not Allowed.'' These calls are not allowed to intraflow again. EUCD calls are not allowed to conditionally intraflow throughout the switch in a recursive manner.

> **NOTE:** Intraflow—Threshold operates to attenuate heavy call loads while the split has *active* EUCD agents to answer the calls. So, when the parameters for the first intraflow operation are carefully chosen, the need to redirect the same EUCD call again is minimal.

If a conditionally intraflowed call enters an EUCD queue, and this queue has Intraflow—*All* active, the call will recursively intraflow again. This time, the call intraflows to one of the new split's destinations. Parameters for Intraflow Threshold Redirection

Threshold (overflow) redirection operates when the number of calls that are waiting in a queue is greater than or equal to the preset overflow level. A split's overflow level can be set to any value between 1 and 99. However, if the destination for redirection is an EUCD split, the call to be diverted will only be accepted into queue if the number of calls in queue is less than or equal to the destination split's inflow level *and* there is *at least one staffed agent* in the destination split. A split's inflow level can be set to any value between 0 and 98. When overflow redirection does occur, the switch forwards the first call in queue.

> **NOTE:** When an inflow level is set to ''0,'' a call will not be accepted unless there is *at least one available agent* in the destination split.

For example, split A has an overflow level of 21 and split B has an inflow level of 5. Presently, split A is quite busy. Every agent in split A is busy on a call and the queue contains 20 waiting calls. The next incoming call to split A will attempt to enter split A's queue. If split B has five or less calls in queue, the incoming call will enter split A's queue and the first call in split A's queue will redirect to split B. If split B has six or more calls in queue, redirection can occur to an alternate destination (if assigned). If every destination for redirection of EUCD calls is busy, the incoming call enters the original queue as the 21st call.

> **NOTE:** Assigning the overflow level for split A to ''1'' would have the effect of emptying the queue. This operation for diverting EUCD calls would be applied to the *first call* attempting to enter the queue.

Split Membership

The split supervisor is able to regulate membership in the supervisor's own split by adding and removing agents to/from the split. Furthermore, agents can be transferred from one split to another, provided the two split supervisors coordinate the transfer. Before adding or removing an agent to/from a split, the agent must be placed in the unstaffed mode.

Agent Override

An agent override function is available which allows a local terminal user to enter an agent's call. Agent override is useful as a tool to observe the call handling performance of the agents. However, the agent must be actively engaged in a call. Agent override is activated by a dial access code. An optional warning tone is available and is provided by the use of a different dial access code.

Using either agent override dial access code, an audible 2-way connection is always provided by the switch.

EUCD From the Calling Party's Perspective

Recorded Announcements for Caller

When there is a delay in answering the call, either one or two optional recorded announcements inform the calling party of the delay before the call completes. The first recorded announcement can provide a unique message for each EUCD split. The second recorded announcement is system-wide and assures the caller that the call has not failed.

The timing interval preceding the first recorded announcement is set from 2 to 30 seconds (by 2-second increments). The calling party is always connected to the beginning of an announcement. Therefore, the timing between placing the call in queue and actually hearing the announcement can be as much as the timing interval chosen (from 2 to 30 seconds) plus the duration of the announcement.

The second recorded announcement is also available for each split that uses a first recorded announcement. The timing interval between the end of the first announcement and the beginning of the second announcement is set from 2 to 30 seconds (by 2-second increments). The calling party is always connected to the beginning of the announcement. Therefore, the actual timing between announcements can be as much as the timing interval chosen (from 2 to 30 seconds) plus the duration of the second announcement.

If an agent becomes available at any time before, during, or after a recorded announcement, the switch removes the announcement (if necessary) and sets the call-distribution process in motion.

Music-on-Hold

Music-on-Hold is also optional and may be provided to callers who are waiting in queue. A music signal provides continuous audible feedback indicating that the connection is still in effect.

When Music-on-Hold is provided for EUCD queues, music is also provided (on a per-switch basis) for the Hold, Conference—Three Party, and Transfer features.

Tabular Representation of Available Choices

The following table shows the calling party interfaces provided by EUCD. Generally, each EUCD split can use a different option. However, the Music-on-Hold option is assigned on a system-wide basis. If this option is assigned, incoming calls to every split receive music. When the option is not assigned, incoming calls to every split do not receive music.

A split cannot be provided with the system-wide second recorded announcement unless the split is also provided with a first recorded announcement. An easy way to circumvent this problem, if desired, is to provide a first recorded announcement with similar wording to the system-wide announcement.

Table 50-1. Available Choices for Customer Interface

OPTION	CALLING PARTY HEARS*
No Announcement	Ringback
First Recorded Announcement (No music provided)	Ringback, Announcement, Silence
First and Second Recorded Announcements (No music provided)	Ringback, First Announcement, Silence, Second Announcement, Silence
First Recorded Announcement (Music provided)	Ringback, Announcement, Music
First and Second Recorded Announcement (Music provided)	Ringback, First Announcement, Music, Second Announcement, Music

* When an agent becomes available for the call, the switch will immediately discontinue ringback, either announcement, or the choice of silence or music in order to distribute the call.

Zip Tone

Agents in an EUCD split receive zip tone before connecting to an EUCD call. A single burst of zip tone designates a call dialed directly to the agent's split (one burst of zip tone is only provided for agents with automatic answering). Two bursts of zip tone designate a call redirected from a local system split. Three bursts of zip tone designate a call which routed to the split via a trunk group in the network (e.g., by overload balancing).

Queue-of-Origin and City-of-Origin Announcements

After hearing zip tone, the agent may receive either a queue-of-origin or city-of-origin announcement. The calling party cannot hear either the zip tones or the announcement.

When implemented, the queue-of-origin announcement is heard when intraflow redirects an EUCD call to an agent in another local split. When implemented, the city-of-origin announcement is heard when interflow redirects an EUCD call to an agent at a distant node of the DCS or ETN network.

The queue-of-origin and city-of-origin announcements are 1.5 seconds long, run continuously, and are connected to an agent on a barge-in basis. Pressing an optional REPEAT button repeats the city-of-origin announcement.

> **NOTE:** When recording ''continuous'' announcements (city- and queue-of-origin), the message (e.g., ''Detroit'') should be repeated for the *full duration* of the announcement set's announcement. As an example, the 13A announcement set provides 24-second announcements. ''Detroit'' should be repeated (i.e., ''Detroit, Detroit, Detroit, ...'') for the entire 24 seconds. In this way, agents will more readily hear the announcement, and the number of ''reset intervals'' between machine playbacks is reduced.

Display Capabilities for Agents

The functionality provided by the Display—Voice Terminal feature can be applied to uses for EUCD agents. These visual capabilities can replace and/or supplement the traditional queue-of-origin and city-of-origin announcements.

> **NOTE:** The 7407D or 7405D voice terminal would provide the necessary display functionality for an EUCD agent.

The display capabilities that are available for use by EUCD agents are as follows.

- Queue-of-Origin Display

  When an EUCD call is redirected to a local EUCD split, the answering agent receives a visual display identifying the originally called split. The queue-of-origin display is obtained by assigning an appropriate name (e.g., Sales Dept.) to the queue directory number or the split supervisor's individual extension number for the originally called split.

- City-of-Origin Display

  When an EUCD call is redirected to a distant EUCD split, the answering agent receives a visual display identifying the city of the originally called split. The city-of-origin display is obtained by assigning an appropriate name (e.g., Chicago) to the incoming trunk group at the distant node.

- Calling Number Display

  When a call from within the DCS network is directed to an agent's individual extension number, the agent receives a visual display identifying the calling party or department. This is useful when an agent needs to correspond with other individuals or departments within the company.

- Dialed Number Display

  This function displays the dialed number when an agent places a call. This display helps to ensure accuracy in dialing.

- Elapsed Time Function

  This function displays the amount of time elapsing since the ELAPSED TIME button was pressed. The Elapsed Time function operates during calls and between calls. Therefore, an agent can use this clock as a tool for pacing the agent's handling of calls and after call work.

- Calculator Function on 7407D

  Calculator functionality is provided with the 7407D voice terminal that allows an agent to conveniently perform any necessary arithmetic computations. The calculator on the 7407D can operate during calls and between calls. Therefore, an agent can use the calculator both as a tool for quoting prices to customers and as an aid for after call work.

DNIS (Dialed Number Identification Service) Without Call Vectoring

In the initial availability of DNIS, EUCD agents equipped with a display voice terminal (e.g., 7405D, 7406D, or 7407D) receive visual displays that specify the dialed number for calls terminating to the agent's voice terminal. The Call Forwarding—Follow Me feature or the Call Coverage feature (using the ''All'' criterion) is used to provide the redirection needed to deliver this functionality.

In traditional EUCD arrangements, groups of agents are organized into ''splits'' (functional groups of answering positions). Under this approach, an agent is trained to answer calls for one specific purpose in an efficient and professional manner. However, EUCD managers are recognizing the need to relax this concept of limiting each split to one call-answering task.

The alternative is to provide splits where each group of agents is proficient with several types of calls. The desired gain is to provide adequate service for the several call types with fewer agents and with less administrative intervention by the EUCD manager. Using this approach, the changing staffing needs of the several call types are averaged in time, and enough agents are staffed to provide adequate service for the prevailing average load. Where five agents might be needed in each of three smaller splits (15 agent total) to handle three types of calls, only 11 or 12 agents might be needed in the single (more general) split.

This idea of averaging the call-handling load is sound for certain applications, but the goal of improved agent efficiency is more readily achieved with the DNIS capability. The DNIS function of the EUCD feature allows each answering agent to know the purpose of each incoming call as the call terminates to the agent's voice terminal. As a result, the natural efficiencies of the single split/single call type arrangement are not compromised. With the calling number display provided by DNIS, agents are aware of each call's purpose, and can answer each incoming call with the appropriate greeting. Agents need not invest time merely to determine the purpose of calls.

The following table shows sample displays that an EUCD agent might receive.

Table 50-2. DNIS Display Information

TYPE OF CALL	DISPLAY
Inside call	a=R JONES to CLAIMS f
Outside call	a=OUTSIDE CALL to SALES f

Call Forwarding—Follow Me Configuration

Using this configuration, a ‘‘dummy’’ extension is assigned in Procedure 000 (without assigning an equipment location) for each call purpose within a split. These extensions are, in turn, forwarded to the split’s associated extension number. A calling party dials the number of the dummy extension, and the call is forwarded to the split’s queue.

NOTE: Since Call Forwarding can be activated for the extension from an attendant console, an actual voice terminal and line circuit are not required to complete the configuration. After these Call Forwarding relationships are established from the console, a ‘‘Run Tape’’ operation should be performed (using the MAAP or SMT) to make these relationships permanent.

Call Coverage (All) Configuration

Using this configuration, a ‘‘dummy’’ extension is assigned in Procedure 000 (without assigning an equipment location) for each call purpose within a split. Also, these extensions are assigned to the appropriate coverage group in Procedure 000, Word 2. These extensions are, in turn, redirected using Cover All (Procedure 011, Word 1) to the split’s associated extension number. A calling party dials the number of a dummy extension, and the call is redirected to the split’s queue.

NOTE: Since the Call Coverage configuration is an administered relationship, an actual voice terminal and line circuit are not required to complete the configuration. However, as a normal aspect of the Call Coverage feature, internal callers to the EUCD split will receive coverage tone (followed by the system-wide caller response interval) before the call enters the split’s queue.

Agent Convenience

Multibutton voice terminals are recommended for use with EUCD. The feature buttons provide convenience and flexibility for the agents. The agent’s mode of operation can be altered without interruption to callers, and the agent is freed from remembering numerous dial access codes. Furthermore, the status lamps on the terminal provide a visual reminder of the current agent mode.

NOTE: Refer to Table 50-B for a cross-reference of applicable feature buttons and dial access encodes.

Automatic answering is available and recommended to provide hands-free operation for the EUCD agents. With automatic answering assigned to a terminal, incoming calls automatically connect to the terminal without ringing. The call automatically disconnects from the agent's terminal when the calling party disconnects. In the AUTO-IN mode, the agent is available for the next call immediately after disconnecting from the previous call.

> **NOTE:** When automatic answering is used, it is very preferable to provide headsets for the agents. However, automatic answering can be used in conjunction with voice terminal handsets.
>
> Automatic answering combined with handset usage may result in unexpected and somewhat inconvenient agent operation. The primary effect is that going on-hook (i.e, hanging up the handset) places an agent's position in the unstaffed mode, and the agent must manually staff the position to receive another EUCD call. So, in order for handset usage to be effective, an agent must wait to answer calls with the handset *continuously held* to the agent's ear. The secondary effect is that on straight line sets (where handset operation is usually tried) there is no RELEASE button available. So, agents must wait (approximately 6 seconds) for the automatic disconnect process to finish before returning to an available state. (If the agent chooses to go on-hook instead of waiting, the voice terminal returns to the unstaffed mode.)

The buttons that are available for use by EUCD agents are as follows.

- APPEARANCE BUTTONS (usually, one or two)

  Agents use these buttons to place and answer calls. Two status lamps (red and green) are adjacent to each appearance button. The red lamp lights when an agent presses an appearance button. The green lamp flashes to alert an agent to an incoming call. Since incoming EUCD calls always terminate to the first appearance, only one appearance is necessary to perform basic agent duties. However, two appearances provide an expanded functionality for agents. With the second appearance, an agent can more readily receive calls to the agent's individual extension number (e.g., from another department), transfer calls (e.g., to another particular agent), and place calls. A third appearance can be provided when an agent has a special need to place calls.

  To provide an appropriate functionality for the agents, the recommended assignment of the appearance buttons is as follows.

  1. Terminating and originating capabilities
  2. Terminating and originating capabilities
  3. Originating (only) capabilities.

- ASSIST

  The ASSIST button is an Abbreviated Dialing button with the split supervisor's individual extension number as the stored number. An agent uses this button to request help from the split supervisor. Pressing this button places a call from the agent to the split supervisor.

- AUTO-IN

  This button is pressed when an agent wants to receive calls in the automatic mode. In the automatic mode, an agent is available to receive an EUCD call immediately after disconnecting from the previous call. Activating this mode (pressing the AUTO-IN button) automatically releases all other modes.

- AUX-WORK

  This button allows an agent to discontinue receiving EUCD calls. Often, this mode is active during breaks from the work schedule (e.g., lunch, coffee breaks, etc.). Pressing the AUX-WORK button automatically releases all other modes.

- HOLD

  This button allows an agent to place an active call on hold. When a call is placed on hold, the EUCD feature will not distribute new calls to that agent until the held call is released or transferred.

- LWC

  This button activate the Leave Word Calling feature. The EUCD agents can quickly and easily leave standard messages with the Leave Word Calling feature. Pressing the LWC button leaves a ‘‘return call’’ message for a called party within the DCS network.

- MANUAL-IN

  Pressing this button allows an agent to receive a single EUCD call. In the Manual-In mode, an agent is considered unavailable to receive another EUCD call upon disconnecting from a call. In this way, the agent can finish call-related paper work or do follow-up work before accepting another call.

- RELEASE

  Pressing this button releases any type of call in progress at an answering position.

  > **NOTE:** The RELEASE button should not be assigned to an agent’s (or observer’s) voice terminal unless automatic answering (Procedure 052, Word 1) *is also assigned* to the voice terminal.

  Well trained agents routinely press the RELEASE button just after the closing salutation to the calling party. If the RELEASE button is not pressed, the duration of the automatic disconnect process is on the order of 6 seconds. However, using the RELEASE button, the disconnect process completes in less than 1/10 of 1 second.

  The time savings accrued from regular use of the RELEASE button provides several advantages:

  1. Reduced charges for toll trunk facilities
  2. Quicker distribution of the next call to an agent in the AUTO-IN mode
  3. More reliable 106B lamp display of the current agent state (i.e., agent active on EUCD call, or agent engaged in after call work) for an agent in the MANUAL-IN mode.

- REPEAT

  Pressing this button repeats the optional city-of-origin announcement for an agent.

- STAFFED

  This button is pressed by an EUCD agent to indicate to the switch that the agent's voice terminal is in the occupied mode. Another press of the STAFFED button would return the agent's position to the unoccupied mode. When the STAFFED button is pressed and the position becomes occupied, the position is placed in the AUX-WORK mode, pressing the AUTO-IN or the MANUAL-IN button would allow an agent to receive an EUCD call.

  For EUCD agents using voice terminals equipped with headsets, plugging in the headset automatically places an agent in the occupied mode. Removing the headset automatically places the agent in the unoccupied mode.

The buttons that are available for use by split supervisors are as follows.

- ADD AGENT

  The ADD AGENT button is an Abbreviated Dialing button with the Member Add access code as the stored number. When the split supervisor presses this button, the Member Add access code is automatically dialed.

- AGENT OVERRIDE

  The AGENT OVERRIDE button is an Abbreviated Dialing button with an Agent Override access code (with or without warning tone) as the stored number. Using this button, the split supervisor or an observer can enter an agent's call to observe the agent's work performance.

- DELETE AGENT

  The DELETE AGENT button is an Abbreviated Dialing button with the Member Delete access code as the stored number. When the split supervisor presses this button, the Member Delete access code is automatically dialed.

- INTERFLO ALL

  The INTERFLO ALL button is an Abbreviated Dialing button with the Overload Balance All access code as the stored number. When the split supervisor presses this button, the access code for unconditional distant forwarding of EUCD calls is automatically dialed.

- INTERFLO THRESHLD

  The INTERFLO THRESHLD button is an Abbreviated Dialing button with the Overload Overflow access code as the stored number. When the split supervisor presses this button, the access code for overflow distant forwarding of EUCD calls is automatically dialed.

- INTRAFLO ALL

  The INTRAFLO ALL button can be a Call Forwarding—Follow Me feature button. The split supervisor uses this button to activate unconditional local forwarding of EUCD calls.

  This button can also be an Abbreviated Dialing button with the Call Forwarding—Follow Me access code as the stored number. When the split supervisor presses this button, the access code for unconditional local forwarding of EUCD calls is automatically dialed.

- INTRAFLO THRESHLD

  The INTRAFLO THRESHLD button can be a Call Forwarding—Busy and Don't Answer feature button. The split supervisor uses this button to activate overflow local forwarding of EUCD calls.

  This button can also be an Abbreviated Dialing button with the Call Forwarding—Busy and Don't Answer access code as the stored number. When the split supervisor presses this button, the access code for overflow local forwarding of EUCD calls is automatically dialed.

- VERIFY ANNCT

  The VERIFY ANNCT button is an Abbreviated Dialing button with the Announcement Verify access code as the stored number. When the split supervisor presses this button, the access code to verify the split's recorded announcement is automatically dialed.

The recommended button layouts for EUCD voice terminals are shown in Figures 50-3 through 50-9. These figures are provided to clarify the feature description and to assist in implementing the agents' sets.

Figures 50-3, 50-4, and 50-5 show the recommended button configurations for convenient handling of EUCD calls. Figure 50-3 shows the recommended layout for a 16-button voice terminal. Figure 50-4 shows the layout for a 7407D Integrated Display Terminal. Figure 50-5 shows the layout for a 7406D With Display. All of these voice terminals contain two appearance buttons for convenient answering of incoming calls.

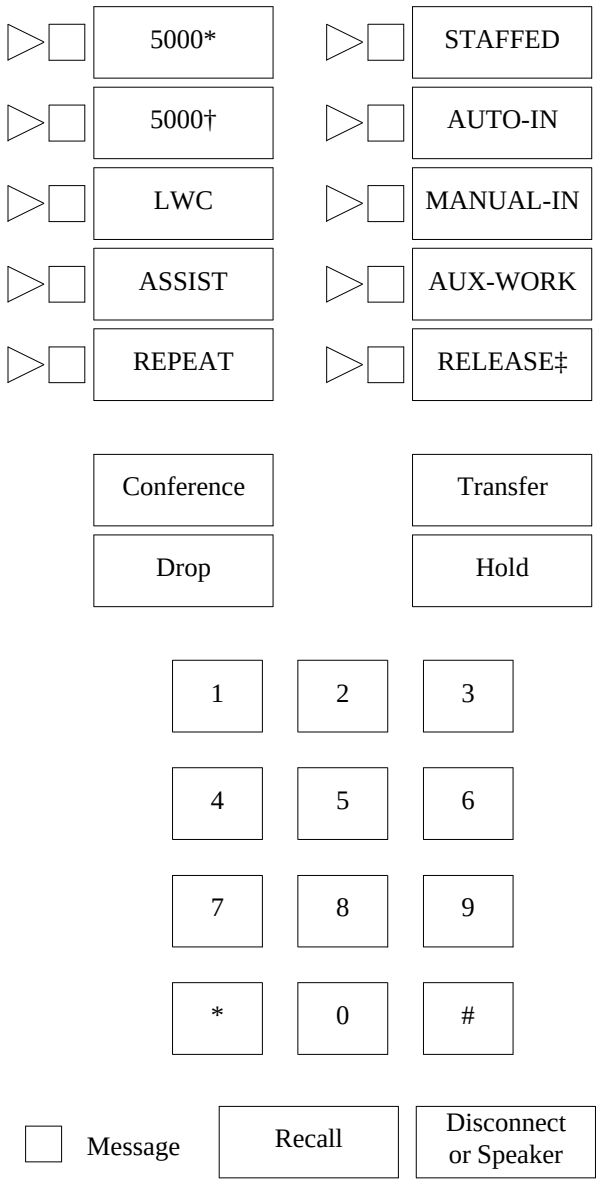

* Terminating and originating capabilities are recommended for the first appearance of an agent's voice terminal.

† Terminating and originating capabilities are recommended for the second appearance of an agent's voice terminal.

‡ Whenever the RELEASE button is assigned to a voice terminal, automatic answering should also be assigned to the terminal.

Figure 50-3. Button Configuration for EUCD Agent (16-Button Set)

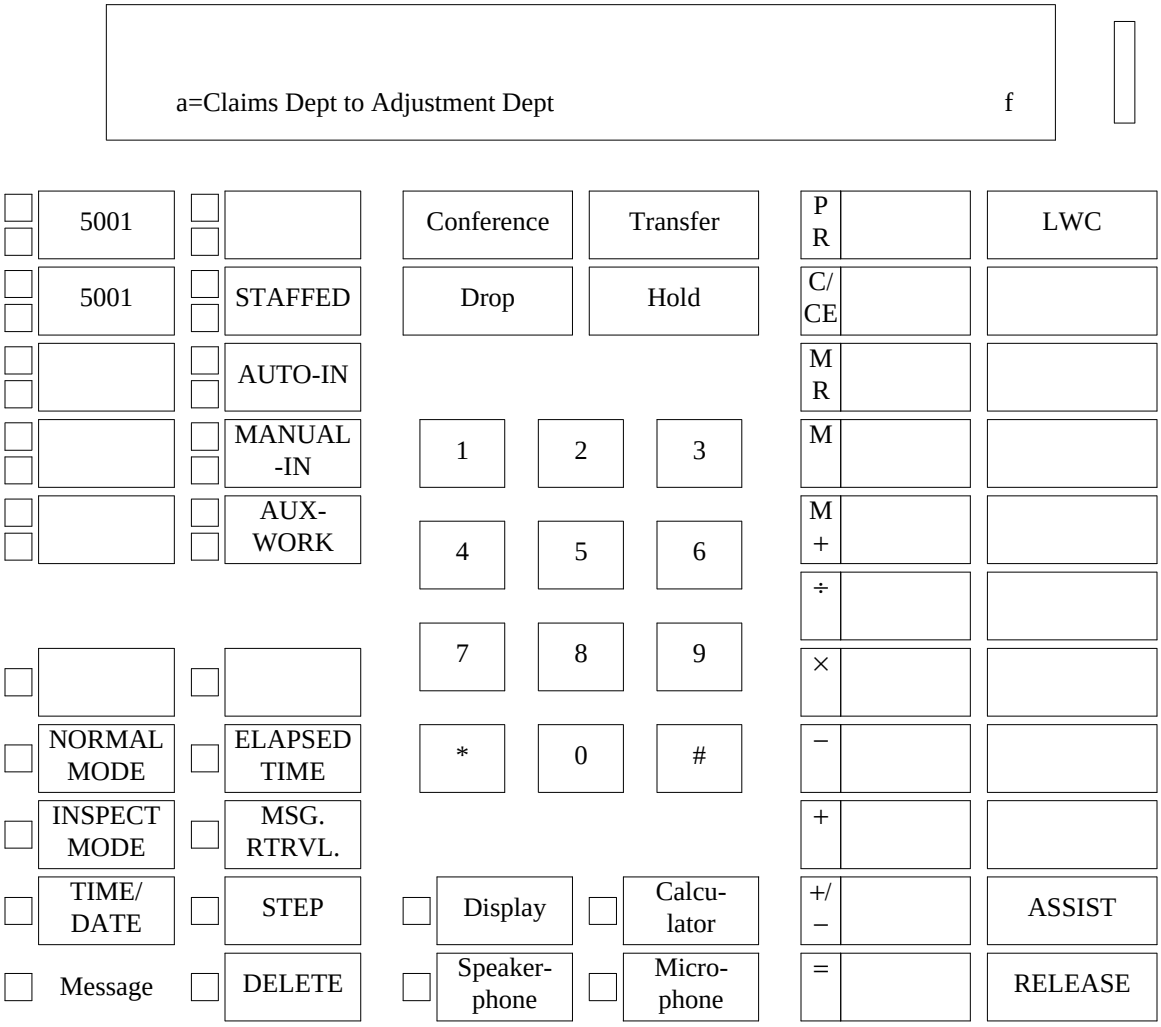

Figure 50-4. Button Configuration for EUCD Agent (7407D Integrated Display Terminal)

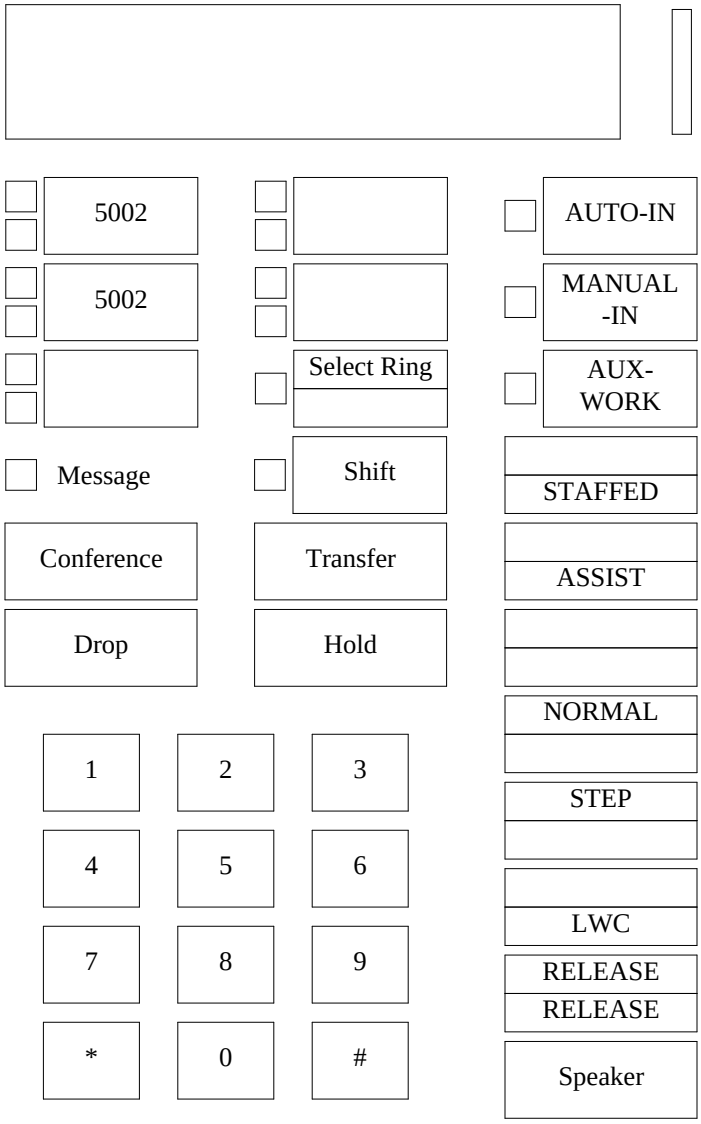

Figure 50-5. Button Configuration for EUCD Agent (7406D With Display)

Figure 50-6 shows the recommended button configuration for an agent who needs to receive terminal-to-terminal calls. The recommended layout is for a 16-button voice terminal. If additional buttons are desired, a larger voice terminal would be necessary. This voice terminal contains three appearance buttons. The first and second appearances provide basic EUCD functionality, while the third appearance allows direct call completion to the agent's individual extension number.

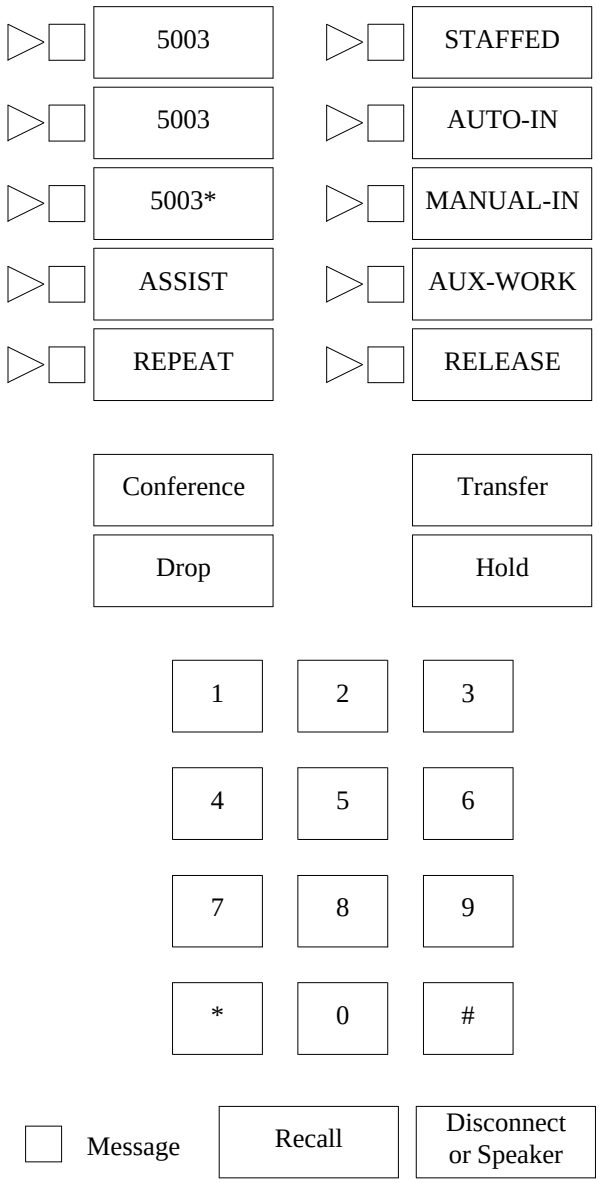

* Originating capabilities (only) are recommended for the third appearance of an agent's voice terminal.

Figure 50-6. Agent Who Also Receives Direct Calls (16-Button Set)

Figure 50-7 shows the recommended button configuration for an agent who handles EUCD calls for two splits. Since many of the buttons are duplicated, a larger set is required for this purpose.

The blank buttons can be assigned as desired by the customer.

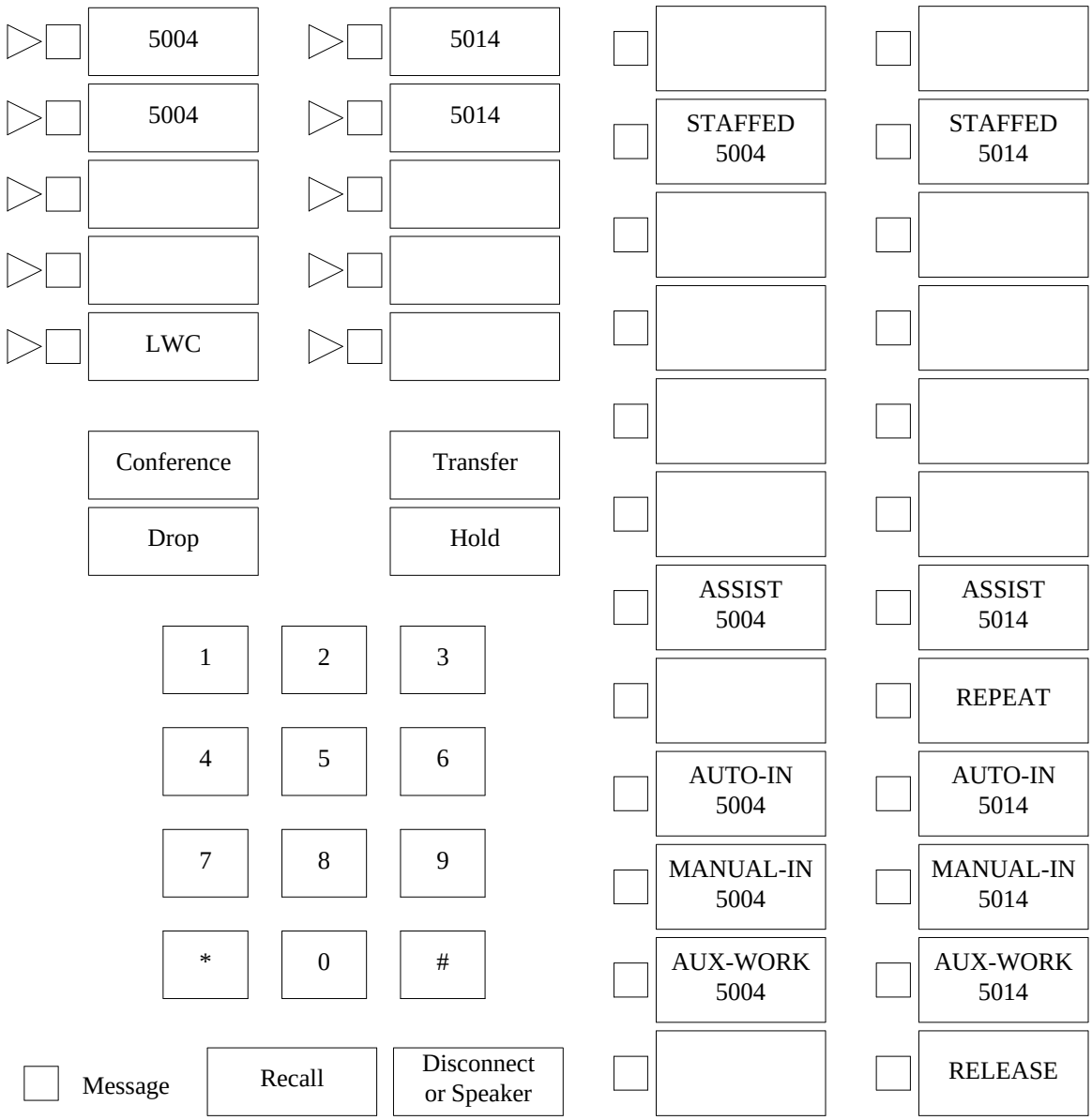

Figure 50-7. Agent Handling EUCD Calls for Two Splits (40-Button Set)

Figure 50-8 shows the recommended button configuration for a split supervisor without agent responsibilities. The recommended layout is for a 16-button voice terminal. This voice terminal contains three appearance buttons, but the third is optional.

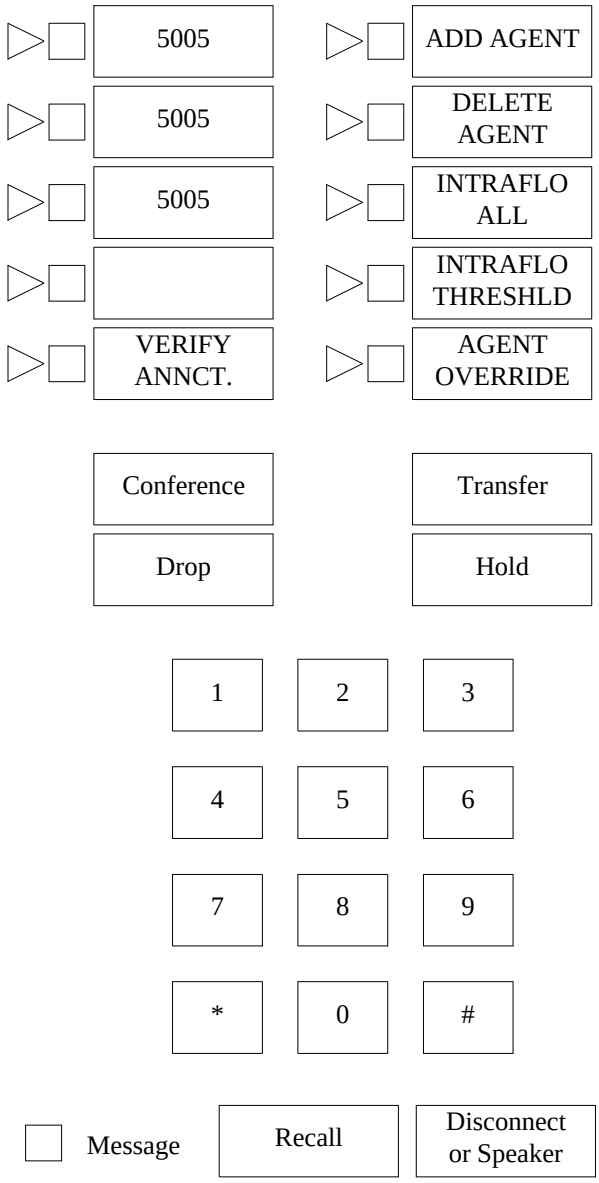

Figure 50-8. Split Supervisor, Without Agent Responsibilities (16-Button Set)

Figure 50-9 shows the recommended button configuration for a split supervisor with agent responsibilities. Since this set contains the buttons needed by an agent and the supervisor, a larger set is required for this purpose.

The blank buttons can be assigned as desired by the customer.

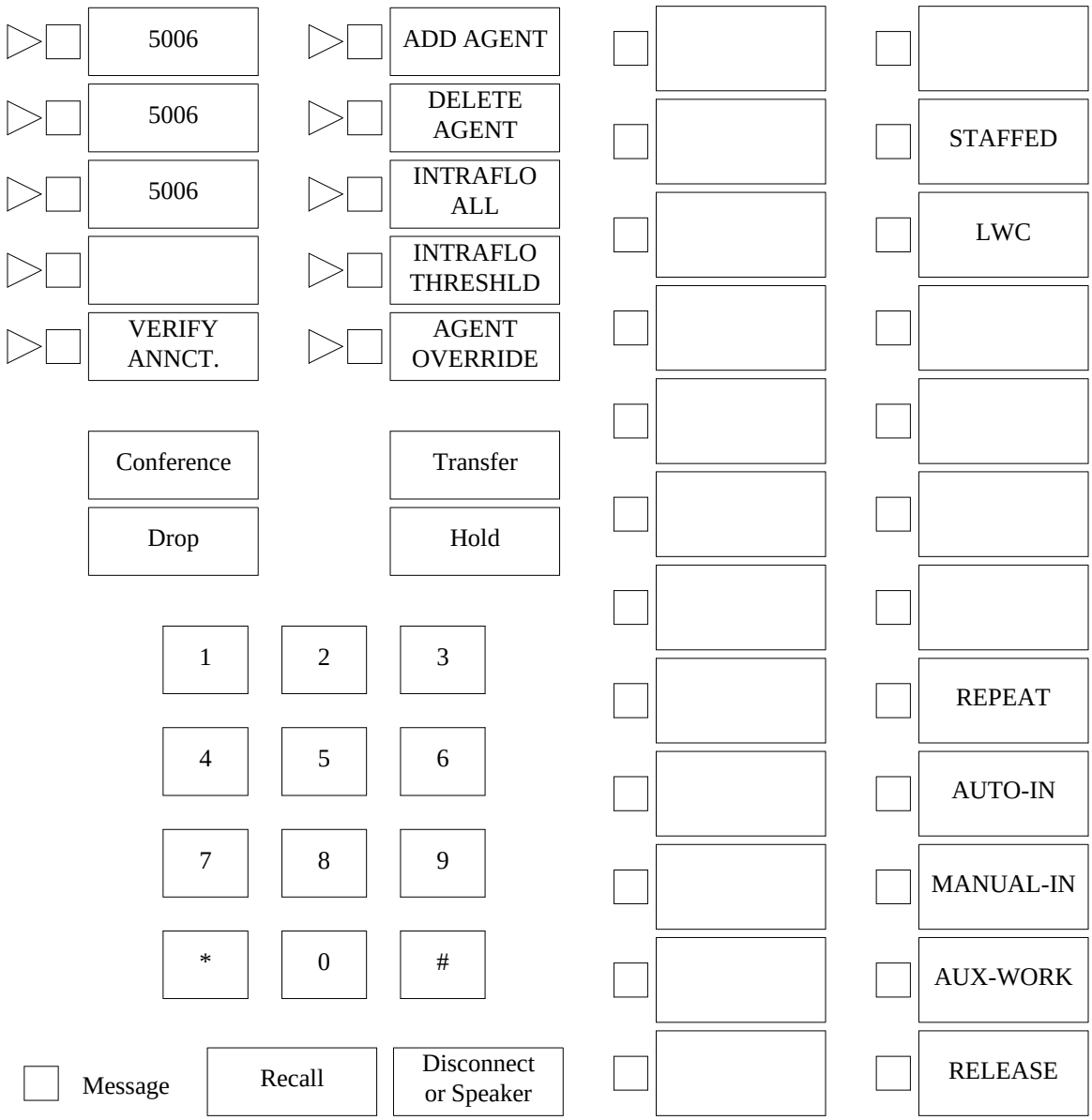

Figure 50-9. Split Supervisor With Agent Responsibilities (40-Button Set)

USER OPERATIONS

The following are the user operating procedures for this feature.

To Activate Call Forwarding for EUCD Calls

— The split supervisor should:

- Press an idle appearance button. [Dial tone]
- Dial the Call Forwarding—Activate access code (either unconditional or overflow), or press the INTRAFLO ALL or INTRAFLOW THRESHLD button. [Dial tone]
- Dial the number of the forwarding destination. [Confirmation tone]
- Press the RELEASE button or go on-hook. (This activation can be performed as many as three times. The order of activation sets the order of priority for forwarding.)

— The system supervisor (using the designated attendant console) should:

- Press an idle loop button.
- Press the START button. [Dial tone]
- Dial the Call Forwarding—Activate access code (either unconditional or overflow). [Dial tone]
- Dial the split supervisor's extension number (to identify the split). [Dial tone]
- Dial the number of the forwarding destination. [Confirmation tone]
- Press the RELEASE button. (This activation can be performed as many as three times. The order of activation sets the order of priority for forwarding.)

To Establish a Default Destination for Overload Balancing

— The split supervisor should:

- Press an idle appearance button. [Dial tone]
- Dial the Overload Balancing—Default access code. [Dial tone]
- Dial the AAR/ARS access code. [Dial tone]
- Dial the 7- to 10-digit number of the distant default destination. [Silence]
- Dial ''#.'' [Confirmation tone]
- Press the RELEASE button or go on-hook.

To Activate Overload Balancing to the Default Destination

— The split supervisor should:

- Press an idle appearance button. [Dial tone]
- Dial the Overload Balancing—Activate access code (either unconditional or overflow), or press the INTERFLO ALL or INTERFLO THRESHLD button. [Dial tone]
- Press the ‘‘#’’ button. [Confirmation tone]
- Press the RELEASE button or go on-hook. (This destination is *automatically inferred* as the last priority destination.)

To Activate Overload Balancing to a Special Destination

— The split supervisor should:

- Press an idle appearance button. [Dial tone]
- Dial the Overload Balancing—Activate access code (either unconditional or overflow), or press the INTERFLO ALL or INTERFLO THRESHLD button. [Dial tone]
- Dial the AAR/ARS access code. [Dial tone]
- Dial the 7- to 10-digit number of the special distant destination. [Confirmation tone]
- Press the RELEASE button or go on-hook. (This destination is *automatically inferred* as the last priority destination.)

To Add an Agent to a Split

— The split supervisor should:

- Press an idle appearance button. [Dial tone]
- Dial the Member Add access code, or press the ADD AGENT button. [Dial tone]
- Dial the extension number of the agent to be added. [Confirmation tone]
- Press the RELEASE button or go on-hook. (The added agent is in the unstaffed mode.)

To Remove an Agent From a Split

— The split supervisor should:

- Be sure that the agent is in the unstaffed mode.
- Press an idle appearance button. [Dial tone]
- Dial the Member Delete access code, or press the DELETE AGENT button. [Dial tone]
- Dial the extension number of the agent to be removed. [Confirmation tone]
- Press the RELEASE button or go on-hook.

To Activate Agent Override With Warning Tone

— An observer should:

- Be sure that the agent is active on a call.
- Press an idle appearance button. [Dial tone]
- Dial the agent override (warning tone) access code, or press the AGENT OVERRIDE (with warning tone) button. [Dial tone]
- Dial the extension number of the agent to be observed.
- After observation, press the RELEASE button.

To Activate Agent Override Without Warning Tone

— An observer should:

- Be sure that the agent is active on a call.
- Press an idle appearance button. [Dial tone]
- Dial the agent override (no tone) access code, or press the AGENT OVERRIDE (without warning tone) button. [Dial tone]
- Dial the extension number of the agent to be observed.
- After observation, press the RELEASE button.

To Verify a Split's First Recorded Announcement

— The split supervisor should:

- Press an idle appearance button. [Dial tone]
- Dial the Announcement Verify access code, or press the VERIFY ANNCT button.

- Listen to the announcement.
- Press the RELEASE button or go on-hook.

To Extend an Attendant Call to an EUCD Split

— An attendant should:

- Press the ANSWER button. [Talking connection between the attendant and the calling party]
- Press the START button. [The switch returns dial tone, and places the calling party in soft hold.]
- Dial an associated extension number for the desired split. [Ringback tone]
- Press the RELEASE button *within 4 seconds*. [The switch places the calling party in the split's queue.]

  NOTE: If the attendant does not release within 4 seconds, the call is treated as a direct attendant call. Attendant calls to an EUCD split do not enter the split's queue. Instead, System 85 scans the split for an available agent. If an available agent is not found, there are two possible switch responses. First, if Attendant Call Waiting is assigned to the switch, the call waits on the split supervisor's voice terminal. Second, without Attendant Call Waiting, the switch returns busy tone to the attendant.

To Turn Off the Reload Warning Lamp

— The system supervisor (using the designated attendant console) should:

- Press an idle loop button.
- Press the START button. [Dial tone]
- Dial the Reload Warning Lamp access code. [The switch returns confirmation tone, and the lamp turns off.]
- Press the RELEASE button.

— A split supervisor should:

- Go off-hook on an idle appearance. [Dial tone]
- Dial the Reload Warning Lamp access code. [The switch returns confirmation tone, and the lamp turns off.]

CONSIDERATIONS

Switch Capacities

The switch is capable of handling 512 answering positions arranged in as many as 30 splits. The splits' sizes are always built in blocks of 16 positions. Therefore, a split may contain 16, 32, 48, etc., potential answering positions. An acceptable configuration using all 512 positions spread across 16 splits would be: 4 splits of 64 positions, 4 splits of 32 positions, and 8 splits of 16 positions. A processor occupancy evaluation can be performed to determine the impact of the desired configuration.

The Message Center feature and AUDIX use EUCD splits. Hence, the use of EUCD splits by AUDIX and Message Center decreases the number of EUCD split and agent positions available for traditional agent operations (e.g., order taking).

An EUCD split serves as the gateway to each AUDIX system. An AUDIX adjunct can only have as many as 32 voice ports. Therefore, these AUDIX gateway splits should only be configured to contain 16 or 32 (usually, 32) members.

As many as 30 queue status lamps (i.e., four 30A8 SSI panels) can be provided with the switch to display the status of EUCD queues.

Each 106B display unit can monitor the status of up to 20 agents. As many 106Bs as needed can be provided. For example, if a switch contained 512 agents (the maximum for EUCD on System 85), 26 display units could be provided to monitor the calling activity of every agent.

NOTE: An agent can only be monitored on one 106B display unit at a time.

Any number of queued callers can listen to the same delay recorded announcement at the same time.

Legal Considerations

Laws and union contractual agreements governing the use of agent override differ in different locations, and are subject to change. It is the responsibility of the customer's switch administrator to understand and comply with the applicable regulations.

Intraflow and Interflow

Operation of Intraflow and Interflow

The call forwarding function of the EUCD feature (i.e., intraflow) is used to redirect EUCD calls to local destinations. The overload balancing function (i.e., interflow) is used to redirect EUCD calls to distant network nodes. Any attempt to use the Call Forwarding feature to redirect EUCD calls to remote destinations is denied.

There can be three local destinations for redirection of EUCD calls. These destinations are arranged in a priority scheme. If the first destination is unavailable, the switch checks the second and third destinations. Assign the destinations by repeatedly activating either the Call Forwarding—Follow Me (unconditional forwarding) or the Call Forwarding—Busy and Don't Answer (overflow forwarding) feature. Cancel the destinations in reverse order by repeatedly deactivating Call Forwarding.

Additionally, there can be one internode destination for redirection of EUCD calls. As mentioned, this destination is always provided via overload balancing. The internode destination is always automatically implemented as the last priority. The internode destination can be used alone or at the end of the list of local destinations. As such, there can be as many as four possible destinations.

Internode Forwarding Not Allowed

The call forwarding function of the EUCD feature can only be used to redirect EUCD calls to local destinations. The overload balancing function is used to redirect EUCD calls to distant network nodes. Any attempt to use the Call Forwarding feature to redirect EUCD calls to remote destinations is denied.

Power Interruptions

After a power interruption, an automatic reloading occurs of switch translations from the tape into memory. The system reload warning lamp lights. To turn off the reload warning lamp, the system supervisor should press an idle loop button, press the START button, dial the Reload Warning Lamp access code, and press the RELEASE button.

After a tape reload, all split members are unavailable for split calls. Agents with plugged in headsets are placed in the AUX-WORK mode. Agents without plugged in headsets are placed in the UNSTAFFED mode and must press the STAFFED button to return to the AUX-WORK mode. From the AUX-WORK mode, an agent may press the AUTO-IN or MANUAL-IN button to receive split calls.

Agent Override

Agent override allows a voice terminal user to enter an EUCD agent's calls. However, the agent must have an established call in progress.

To observe successive calls using agent override, the observer must reenter the connection after each call is established.

While an observer (using agent override) is connected to an agent's active call, features such as Conference—Three Party, Transfer, Call Waiting, and Hold are denied for use by the agent.

System 85 does not allow agent override to be activated toward a split supervisor's voice terminal.

DNIS

The DNIS function attaches names to EUCD calls that use *dial-repeating* type routing to reach an EUCD split. The switch receives the dialed *digits* and routes the calls to dummy *extensions*. In turn, these dummy extensions redirect (forward or cover) *every* call to the split's queue.

For DNIS, dummy splits *should not* be used instead of dummy extensions. Dummy splits are not needed for DNIS. When automatic routing is used to direct calls to an EUCD split, these trunk groups can be directly assigned to the ‘‘real’’ split and given *unique* names. In fact, using a dummy split causes an unexpected problem. Since calls are redirected from the dummy split to the real split, the real split cannot use the Intraflow—Threshold function. (Every call arriving to the real split has already redirected once.)

Single-Appearance Terminals and EUCD

Although EUCD agents are allowed to use single-appearance voice terminals, there are some persuasive reasons why they shouldn’t. The following is a summary of the shortcomings confronted when single-appearance voice terminals are used in the EUCD environment.

- No status lamps to indicate the current agent state
- No method to change the current agent state (without disrupting the active call)
- No convenient way to use automatic answering to receive calls
- No RELEASE button to quickly disconnect a finished call
- No ASSIST button to quickly obtain assistance from the split supervisor
- No display modules or built-in display units (for DNIS, city-of-origin, or queue-of-origin displays)
- Higher-cost migration to ACD (where multiappearance voice terminals become more useful).

Hard and Soft Processor Swaps

Stable EUCD calls will endure a hard processor swap.

If an EUCD call is being distributed to an idle agent when a hard swap occurs, the call will fail.

EUCD queues are stored in a status portion of switch memory. Therefore, if an EUCD call is queued to a split when a hard swap occurs, the call is never routed to an idle agent. The queue is cleared.

If an observer is using agent override to monitor an agent when a hard swap occurs, this connection will endure a hard swap.

Call Forwarding and Overload Balancing relationships are stored in a translation portion of switch memory. Therefore, if a split supervisor activates intraflow or interflow and then a hard swap occurs, these relationships will endure the hard swap.

The EUCD feature operates normally during a soft processor swap.

Table 50-3. EUCD Function Access

FUNCTION NAME	APPLICATION	ACCESS CODE—ENCODE	FEATURE BUTTON NAME	ACCESSED BY (NOTE 1)
Call Forwarding—Follow Me	Unconditional local forwarding of split's calls (Intraflow—All).	1	INTRAFLO ALL	1, 2
Call Forwarding—BY/DA	Overflow local forwarding of split's calls (Intraflow—Threshold).	2	INTRAFLO THRESHLD	1, 2
Call Forwarding—Cancel	Deactivates either split forwarding condition.	3		1,2
Hold	Places call in progress on hold.	4	HOLD	2, 3, 4
Auto-In Mode	To receive calls in the automatic mode.	70	AUTO-IN	2, 3
Aux-Work Mode	To get out of receive EUCD calls mode.	71	AUX-WORK	2, 3
Manual-In Mode	Enables agent position to receive a single EUCD call.	72	MANUAL-IN	2, 3
Occupied Mode	Indicates to switch that agent's position is occupied.	73	STAFFED	2, 3
Member Add	Adds members to an EUCD split.	74		2, 5
Member Delete	Removes members from an EUCD split.	75		2, 5

See note at end of table.

FUNCTION NAME	APPLICATION	ACCESS CODE—ENCODE	FEATURE BUTTON NAME	ACCESSED BY (NOTE 1)
Announcement Verify	Allows verification of split's recorded announcement.	76		2
Agent Override (No Tone)	Allows entry into an agent's call in progress without tone alert.	77		2, 4
Agent Override (Warning Tone)	Allows entry into an agent's call in progress with tone alert.	78		2, 4
Reload Warning Lamp	Turns off reload warning lamp after a tape load on the switch.	79		1, 2
Overload Balancing —All	Unconditional distant forwarding of split's calls.	84		1, 2
Overload Balancing —Overflow	Overflow distant forwarding of split's calls.	85		1, 2
Overload Balancing —Cancel	Deactivates either overload balancing condition.	86		1, 2
Overload Balancing —Default	Establishes default destination for overload balancing	87		2
Release Call	Releases any type of call in progress.	—	RELEASE	2, 3, 4
Repeat Announcement	Repeats city-of-origin message to agents.	—	REPEAT	2, 3
Split Supervisor Assistance	Allows an agent to request help from the split supervisor.	—	ASSIST (NOTE 2)	3

NOTE 1: 1 = System Supervisor (using the designated attendant console)
2 = Split Supervisor
3 = EUCD Agent
4 = Observer
5 = Switch Administrator (using an SMT).

NOTE 2: The ASSIST button is an Abbreviated Dialing button with the split supervisor's individual extension number as the stored number.

NOTE 3: Where an encode is shown in the third column, Abbreviated Dialing buttons (using the access code as the stored number) can *always* be assigned to multiappearance terminals.

INTERACTIONS WITH OTHER FEATURES

The following System 85 features affect or are affected by the operation of this feature.

Attendant Call Waiting

Attendant calls to a local EUCD split do not enter the split's queue. The switch scans the split to find an idle terminal to complete the call. If no idle line is found in the split, the call waits on the split supervisor's terminal. When an attendant places a call to an EUCD individual terminal and that terminal is busy, the call waits on the busy individual terminal if Attendant Call Waiting is provided.

Attendant DXS (Direct Extension Selection) With BLF (Busy Lamp Field)

An attendant can use the appropriate DXS buttons to place or extend calls to the associated extension number of an EUCD split. However, since a split's queue is never really ''busy,'' the BLF lamps adjacent to these DXS buttons are never lit.

Automatic Callback

Automatic Callback can be activated toward the individual extension number of an EUCD agent. However, when this is done toward an agent in a busy split (i.e., calls are waiting in queue), a race condition occurs. The switch simultaneously begins the Automatic Callback sequence and the distribution of the next queued call when the agent goes on-hook. Since the EUCD call-distribution algorithms are considerably faster, the agent will usually (if not always) receive the EUCD call first.

Automatic Callback can also be activated toward an associated extension number of an EUCD split. When this is done, the callback sequence is performed against the split supervisor's voice terminal. Again, if the split is busy and if the split supervisor is answering EUCD calls, the same race condition occurs with the same results.

> **NOTE:** Automatic Callback is usually activated toward an agent to facilitate calling from within the organization, and is always more effective when activated toward single-appearance terminals. If EUCD agents (using single-appearance terminals) need to receive intracompany calls, the race condition can be avoided by using the Priority Calling feature. However, the better solution would be to provide agents with multiappearance voice terminals equipped with either two or three appearances. In this way, an extra appearance is available for routine communication with other departments.

Busy Verification of Lines

An attendant can use the Busy Verification of Lines feature to check the busy/idle condition of the terminals in an EUCD split. The agent's terminals can be checked whether or not the terminals are available for split calls. If Busy Verification of Lines is activated toward an EUCD associated extension number, only the split supervisor's line is verified.

Call Coverage

An EUCD split (including a Message Center split or an AUDIX system) can be assigned as the final point in a coverage path. However the split number, rather than an associated extension number, is used to designate the coverage point. Therefore, all coverage calls which are redirected to an EUCD split are placed in the nonpriority queue.

On an attendant extended call to a principal with coverage assigned to an EUCD split (including a Message Center split), the attendant receives cover redirect feedback tone before the call is redirected to the EUCD split. During the 4-second period of silence following the tone (the caller response interval), the attendant should release the call to allow the call to be queued. Also, the attendant can release the call prior to the tone.

CDRR (Call Detail Recording and Reporting)

The CDRR feature records the trunk dial access code as the calling number on an incoming EUCD call. The extension number of the answering agent, rather than the split's published number, is recorded as the dialed number.

Call Forwarding—Busy and Don't Answer

The Call Forwarding—Busy and Don't Answer feature cannot be used to forward calls to an associated extension number of an EUCD (including AUDIX) split. When this is attempted, the switch returns intercept tone.

When the split supervisor activates this feature, calls are forwarded to a local destination when an overflow condition occurs. The Don't Answer portion of this feature does not apply.

The split supervisor cannot use this feature to forward calls for the supervisor's individual extension number. Activation of this feature only forwards calls which are directed to the split's queue.

There can be three forwarding destinations arranged in a priority scheme. If the first priority destination is unavailable, the second and third destinations are checked. However, if the first or second priority destinations were an attendant or an EUCD split (without the inflow level specified for the split), the remaining priority destinations would not be checked. Instead, a forwarded call would unconditionally enter the attendant's or the split's queue.

The forwarding destinations are assigned by repeated activation of the Call Forwarding—Busy and Don't Answer feature. Priority is determined by the order of activation. The destinations are canceled in reverse order by repeated deactivation of the feature.

When an EUCD call is forwarded to another local split, the caller hears the first delay recorded announcement corresponding to the initially dialed split.

Call Forwarding—Don't Answer

An EUCD split supervisor cannot activate Call Forwarding—Don't Answer to forward the supervisor's calls. When an EUCD split supervisor activates Call Forwarding—Don't Answer, the split's calls are forwarded to a local destination in an overflow condition (as if Call Forwarding—Busy and Don't Answer were instead assigned to the supervisor's class of service).

For EUCD calls, there can be three forwarding destinations arranged in a priority scheme. If the first priority destination is unavailable, the second and third destinations are checked. However, if the first or second priority destination is an attendant or an EUCD split (without the inflow level specified for the split), the remaining priority destinations would not be checked. Instead, a forwarded call would unconditionally enter the attendant's or the split's queue.

When an EUCD call is forwarded to another local split, the caller hears the first delay recorded announcement corresponding to the initially dialed split.

Call Forwarding—Follow Me

The Call Forwarding—Follow Me feature can be used to forward all calls to an associated extension number of an EUCD (including AUDIX) split. When this done, forwarded calls enter the split's queue.

The split supervisor cannot use this feature to forward calls to the supervisor's individual extension number. Activation of this feature only forwards calls which are directed to the split's queue.

There can be three forwarding destinations arranged in a priority scheme. If the first priority destination is unavailable, the second and third destinations are checked. However, if the first or second priority destination is an attendant or an EUCD split, the remaining priority destinations are never checked. Instead, a forwarded call would unconditionally enter the attendant's or split's queue.

The destinations are assigned by repeated activation of the Call Forwarding—Follow Me feature. Priority is determined by the order of activation. The destinations are canceled in reverse order by repeated deactivation of the feature.

When an EUCD call is forwarded to another local split, the caller hears the first delay recorded announcement corresponding to the initially dialed split.

CMDR (Centralized Message Detail Recording)

The CMDR feature records the trunk dial access code as the calling number on an incoming EUCD call. The extension number of the answering agent, rather than the split's published number, is recorded as the dialed number.

Conference—Three Party

When an EUCD agent adds another agent to an EUCD call, the resulting conference is not considered a work-related activity for the second agent. The 106B status indicator shows the second agent as engaged in non-EUCD activity.

While an observer (using agent override) is connected to an EUCD agent's call, the Conference—Three Party feature is denied for use by the agent.

DCS (Distributed Communications System)

In a DCS environment, direct attendant calls and attendant extended calls to an EUCD split in another node are queued. However, for attendant extended calls, the attendant does not receive confirmation tone to indicate that the queue has been entered.

FRL (Facilities Restriction Level)

When interflowed EUCD calls use AAR or ARS feature to route these calls outside the local switch, the FRL of the split's supervisor is used to betermine whether these calls can use the available network facilities.

Hunting

Any individual extension number of an EUCD agent may be included in a Hunting sequence. Hunting functions normally in this situation. However, an EUCD split associated extension number cannot be assigned to a Hunting sequence. When this is attempted, an administration error will occur.

Message Center Service

One Message Center split can use intraflow to divert excess calls to another Message Center split. However, when this is done, it is recommended that both splits be assigned to the same AP. If the MCS splits are assigned to different APs, the diverted calls will still enter the backup split's queue, and these calls will be distributed to available MCS agents. But, the Coverage Screen will not be displayed for the answering agent in the backup split.

Override

When Override is activated toward the individual extension number of a busy EUCD agent, the override call intrudes into the agent's active call. When Override is activated toward the individual extension number of an idle EUCD agent, the override call alerts the agent with 3-burst ringing.

When Override is activated toward an associated extension number of an EUCD split and the split supervisor is busy, the call intrudes into the split supervisor's active call. When the split supervisor is idle, the call alerts the supervisor with 3-burst ringing. (The Override call does not enter the split's queue.)

> **NOTE:** If the called agent (or split supervisor) is using a multiappearance terminal, an override call (in preference to intruding into the active call) will terminate to an idle appearance (if available) with 3-burst ringing. When no idle appearances are available, the override call will intrude into the active call.

Priority Calling

When Priority Calling is activated toward an individual single-appearance terminal in an EUCD split, the call waits on that terminal. When Priority Calling is activated toward an associated extension number of an EUCD split, the call always waits on the controlling terminal. (The priority call does not enter the split's queue.)

> **NOTE:** If the called agent (or split supervisor) is using a multiappearance terminal, a priority call will terminate to an idle appearance (if available) with 3-burst ringing. If no idle appearances are available, the switch returns busy tone to the calling party.

SMDR (Station Message Detail Recording)

The SMDR feature records the trunk dial access code as the calling number on an incoming EUCD call. The extension number of the answering agent, rather than the split's published number, is recorded as the dialed number.

Transfer

When an EUCD agent transfers an EUCD call to another agent, the transferred call is not considered a work-related activity for the second agent. The 106B status indicator shows the second agent as engaged in non-EUCD activity.

While an observer (using agent override) is connected to an EUCD agent's call, the Transfer feature is denied for use by the agent.

RESTRICTING FEATURE USE

The MAAP and SMT can apply Termination Restriction to the individual extension number of an EUCD agent. This has the effect of preventing direct calls from terminating at the agent's terminal. However, calls to the EUCD split terminate normally at the agent's position.

An attendant can apply Controlled Termination Restriction to the individual extension number of an EUCD agent. This has the effect of preventing direct calls from terminating at the agent's terminal. However, calls to the EUCD split terminate normally at the agent's position.

HARDWARE REQUIREMENTS

The EUCD feature requires the following additional or special hardware.

To provide the recorded announcements:

- 13A announcement set to provide the recorded announcements (eight channels per 13A) **or** KS-65270 digital announcer (single-channel announcement set)

  NOTE: The 65270 announcer provides remote recording capability.
- An auxiliary cabinet to house the announcement set(s)
- An auxiliary trunk circuit of an SN231 circuit pack for each recorded announcement (four circuits per SN231).

To provide the queue warning lamp control option:

- 30A8 system status indicator panel to display queue warning status for eight EUCD splits
- SN241 contact interface (eight circuits per circuit pack).

To provide lamp monitoring of EUCD agents:

- 106B display unit to display the status of 20 EUCD agents
- Two circuits of an SN224 circuit pack to control each display unit (four circuits per SN224).

To provide convenience for agents, supervisors, and observers:

Headsets

— 3122 Starset II Plantronics* headsets for hands-free operation of the agents

NOTE: Several agent models are available.

— 3122 Starset Supra (supervisory model) headsets for convenient operation of split supervisors and observers

NOTE: Several supervisory models are available.

— 31712 headset adapters to connect headsets to voice terminals.

To provide display capabilities for agents:

- 7407D or 7405D (with D401A display module) voice terminals.

FEATURE ADMINISTRATION

Assignment of the EUCD feature is on a per-system, per-trunk group, and a per-terminal class-of-service basis. The customer can partially administer this feature using the SMT (System Management Terminal) or the TCM (Terminal Change Management) feature. The EUCD feature can also be administered using CSM (Centralized System Management).

* Trademark of Plantronics, Inc.

The following are the applicable MAAP and SMT procedures.

MAAP AND SMT PROCEDURES ENCHANCED UNIFORM CALL DISTRIBUTION			
PROCEDURE	**WORD**	**PURPOSE**	**SMT**
000	1	Assigns the voice terminal class of service to the agents' extension numbers.	Yes
001	—	Assigns an associated extension number to a split supervisor's individual extension number.	Yes
010	1	Assigns EUCD membership to an agent's voice terminal class of service. Also, use this procedure to assign agent override to an observer's class of service.	Yes
026	1	Administers the split size, the queue warning and overflow levels, the ICI message number, the queuing trunk group, the lamp control circuit for the queue warning indicators, type of hunting to an EUCD split, and the type of EUCD split. Each split is identified by a split number (a number between 1 and 30).	Yes
026	2	Assigns members to a split in the order in which hunting is to take place. The first entry is recognized as the split supervisor.	Yes
026	3	Assigns the EUCD system supervisor.	Yes
027	1	Assigns the first delay recorded announcement and the timing intervals preceding the first and second delay recorded announcements to an EUCD split.	Yes
027	2	Assigns the second delay recorded announcement to the switch.	Yes
027	3	Assigns the queue-of-origin and city-of-origin announcements to an EUCD split.	Yes
052	1	Assigns automatic answering (line type) to a multiappearance terminal.	Yes
054	1	Administers the feature buttons and the RELEASE key for the automatic answering mode. Refer to Table 50-C for a cross-reference of applicable feature buttons and dial access encodes.	Yes
060	1	Assigns a split member to a position on the 106B display.	Yes
060	2	Associates the halves of the 106B display.	Yes
100	1	Assigns the queuing trunk type to a trunk group and assigns the announcement trunk type to a trunk group.	No

MAAP AND SMT PROCEDURES
ENCHANCED UNIFORM CALL DISTRIBUTION (Contd)

PROCEDURE	WORD	PURPOSE	SMT
115	—	Assigns trunk-group termination to an EUCD split and priority queuing to the trunk group.	No
150	—	Assigns the equipment locations of auxiliary trunks and incoming EUCD trunks to their trunk-group numbers.	No
155	—	Administers the contact interface circuit for the queue warning indicators.	No
204	1	Designates the desired alphanumeric display for incoming calls to a split's special queue trunk group that reach an attendant.	No
275	4	Assigns abandon call search and answer supervision for EUCD to the system class of service.	Yes
350	1	Assigns the first digit of the feature dial access codes (if required).	No
350	2	Assigns the EUCD feature dial access codes. Refer to Table 50-C for a cross-reference of the applicable dial access codes and feature buttons.	No

The following are the applicable TCM path names used with the AP 16.

TCM SCREENS — ENHANCED UNIFORM CALL DISTRIBUTION	
PATH NAME	**PURPOSE**
terminal-change terminal display unit	Displays or prints the split members being monitored by a 106B display unit.
terminal-change class-of-service attributes	Assigns EUCD membership to a voice terminal class of service and assigns agent override to a voice terminal class of service.
terminal-change extensions attributes	Assigns the class of service to an extension number.
terminal-change group call-distribution attributes	Administers the characteristics of the EUCD split.
terminal-change group call-distribution members	Adds or removes agents to/from an EUCD split. Also, use this screen to assign automatic answering to the agent's extension. This screen is also used to assign the split's priority associated extension number.
terminal-change group group call-distribution trunk-groups	Assigns trunk group termination to an EUCD split and priority queuing to the trunk group.
terminal-change system parameters (select the Call-Distribution option)	Declares the attendant-console number of the system supervisor and assigns abandon call search and answer supervision to the system class of service.
terminal-change terminal buttons	Assigns the feature buttons for the EUCD feature. Refer to Table 50-C for a cross-reference of applicable feature buttons and dial access encodes.

The following are the applicable CSM Command Paths utilizing the **admin** area of TCM or FM.

CSM SCREENS — MASKS ENHANCED UNIFORM CALL DISTRIBUTION		
APPL'N	**OBJECT**	**PURPOSE**
TCM	extension	Administers the voice terminal class of service to the agent(s) extension number, and assigns access to message retrieval, membership in call coverage, and the associated AP or AUDIX machine number.
TCM	associated-extension	Assigns an associated extension number to a split supervisor's extension number. This command also assigns a name display to the associated extension. Associated extension numbers are used to route calls to a EUCD split.
TCM	class-of-service	Administers the EUCD features and/or restrictions that are assigned to the extensions class of service. These features include EUCD member, agent override, and EUCD queue status display. Restriction levels that can be defined with this command are: code restriction (0-3), facilities restriction (0-7), or maximum level (1-6). (Precedence levels only apply if AUTOVON is enabled).
TCM/FM	ucd-grp	System 85 R1 - R2 V2 — Administers EUCD groups and their attributes. Attributes include MCS (Message Center Service) channel, ICI message number, queuing trunk group, inflow and outflow level, hunting pattern, and supervisor extension number.
TCM/FM	acd-grp	System 85 R2 V3, V4 — Administers EUCD groups and their attributes. Attributes include MCS (Message Center Service) channel, ICI message number, queuing trunk group, inflow and outflow level, hunting pattern, and supervisor extension number.
TCM/FM	ucd-members	System 85 R1 - R2 V2 — Administers single or multiple members of the EUCD group. Members are assigned a member number, and can be identified by either the member number or the member's extension number.
TCM/FM	acd-members	System 85 R2 V3, V4 — Administers single or multiple members of the EUCD group. Members are assigned a member number, and can be identified by either the member number or the member's extension number.

CSM SCREENS — MASKS ENHANCED UNIFORM CALL DISTRIBUTION (Contd)		
APPL'N	**OBJECT**	**PURPOSE**
FM	ucd-announcement	System 85 R1 - R2 V2 — Administers the first and second delay announcement for the EUCD feature. Associates a EUCD announcement ELL with a city-of-origin or EUCD queue-of-origin. Associates an existing EUCD announcement number with a VDN. The association determines the announcement heard by agents when incoming calls are routed to an EUCD split. This announcement informs agents of the source of the incoming call. These announcements can be verified by split supervisors.
FM	acd-announcement	System 85 R2 V3, V4 — Administers the first and second delay announcement for the EUCD feature. Associates a EUCD announcement ELL with a city-of-origin or EUCD queue-of-origin. Associates an existing EUCD announcement number with a VDN. The association determines the announcement heard by agents when incoming calls are routed to an EUCD split. This announcement informs agents of the source of the incoming call. These announcements can be verified by split supervisors.
TCM	This command will be set type, i.e., 36-button, 12-button, bct, vds, idt, pt510, coverage-module, feature-module, or data module.	Assigns automatic answering (line type) to a multiappearance terminal. Administers the feature buttons, the stroke count buttons, and the RELEASE key for the automatic answering mode. Defines terminal attributes, such as set color, set mount, and equipment adjuncts.
FM	trk-grp-queue	Assigns the queuing trunk type and the announcement trunk type to a trunk group.
FM	term-trk-grps	Administers trunk group termination to a EUCD split. Assigns priority queuing to the trunk group.
FM	trk	Administers trunks and appropriate trunk attributes for new or existing EUCD trunks.
FM	trk-grp	Assigns the equipment locations of auxiliary trunks and incoming EUCD trunks to their trunk-group numbers. Administers the contact interface circuit for the queue warning indicators.

CSM SCREENS — MASKS ENHANCED UNIFORM CALL DISTRIBUTION (EUCD)		
APPL'N	**OBJECT**	**PURPOSE**
TCM	console-messages	Administers the console message associated with either a trunk group or call type. These messages display on all attendant consoles on a switch. Each console message is also associated with either a message number or a CAS branch number. (System 85 R2 V2) Console message numbers 1 to 3 cannot be added because they are preassigned.
TCM/FM	sys-cos	Administers the system class of service for the EUCD feature. Assigns abandon call search, answer supervision, and CMS for EUCD to the system class of service.
TCM/FM	first-digit	Administers the first dialed digit in the dialing plan.
TCM/FM	dial-access-code	Assigns the EUCD feature dial access codes.
FM	ucd-status-lamps	System 85 R2 V2 — Administers lamps that display (UCD) Uniform Call Distribution member status information.
FM	acd-status-lamps	System 85 R2 V3, V4 — Administers lamps that display (ACD) Automatic Call Distribution group member status information. Lamps are identified by ELL and are associated with a column number on the 106B display unit and with a specific ACD member and group.

EXTENSION NUMBER PORTABILITY

DESCRIPTION

Extension Number Portability allows a user in a private network to move from one node to another (i.e., switch to switch) without changing extension numbers. Portability is ideal in a DCS (Distributed Communications System) as it provides added transparency. It can also be used in an ETN (Electronic Tandem Network) or AUTOVON (Automatic Voice Network) arrangement. Not only does the user's extension number remain unchanged, but the ETN, AUTOVON, and DID (Direct Inward Dialing) numbers also remain unchanged.

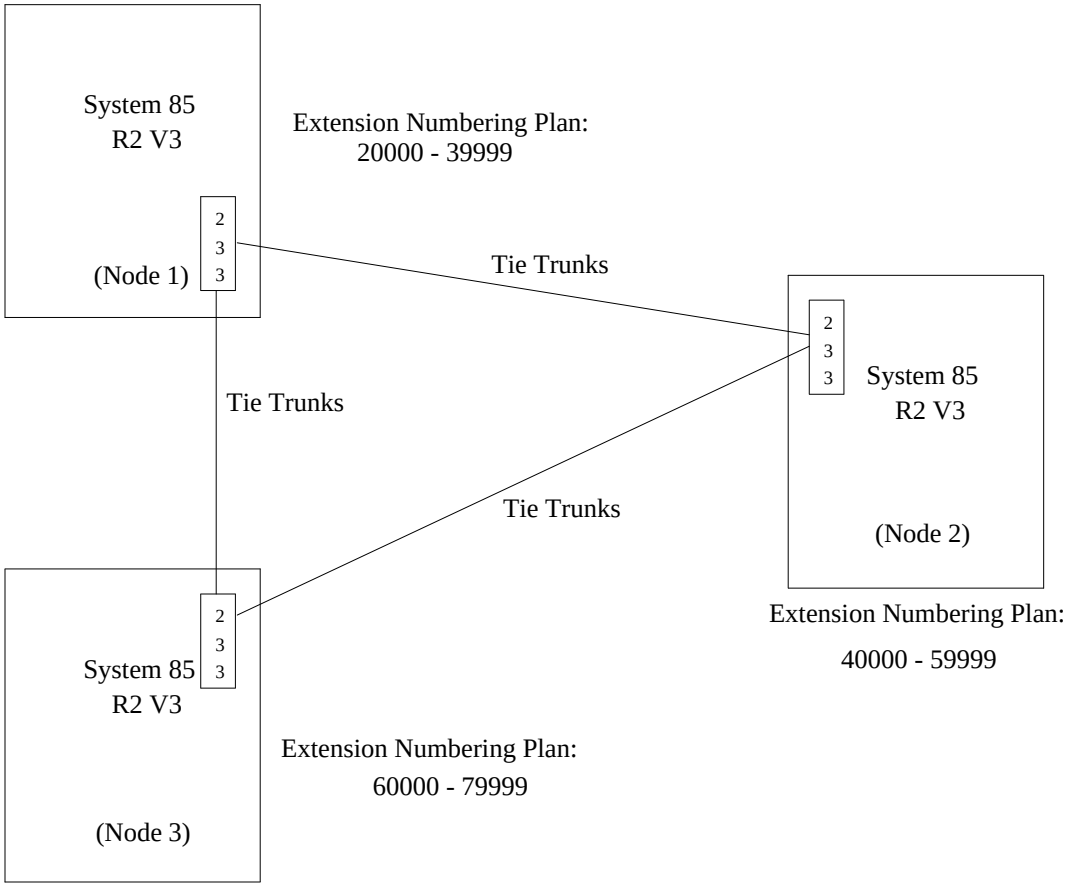

Figure 51-1. Portability Subnetwork Characteristics

Physical Requirements—The Portability Subnetwork

An extension number can be ‘‘ported’’ to any node within a group of switches known as a portability subnetwork. In Figure 51-1, a portability subnetwork is formed under the following constraints:

— Each switch must be a System 85 Release 2, Version 3 or later, and be part of an unrestricted 5-Digit Dialing plan.

  System 85 R2 V3 introduced unrestricted 5-digit dialing. The R2 V3 unrestricted 5-digit dial is essential for true extension number portability. The differences between unrestricted 5-digit dialing and ‘‘*prefix*’’ 5-digit dialing (available on System 85, Release 2, Version 2 and earlier, DIMENSION System Feature Package 8 (Issue 3), and System 75 switches) are described later in this section under *5-Digit Dialing*.

— The switches must be connected by tie trunks as in an ETN.

  Each switch must be able to route a call to any node in the portability subnetwork. Tie trunks provide connectivity for this type of call.

— Each switch must use AAR (Automatic Alternate Routing).

  This feature provides automatic routing for calls between nodes in a private network.

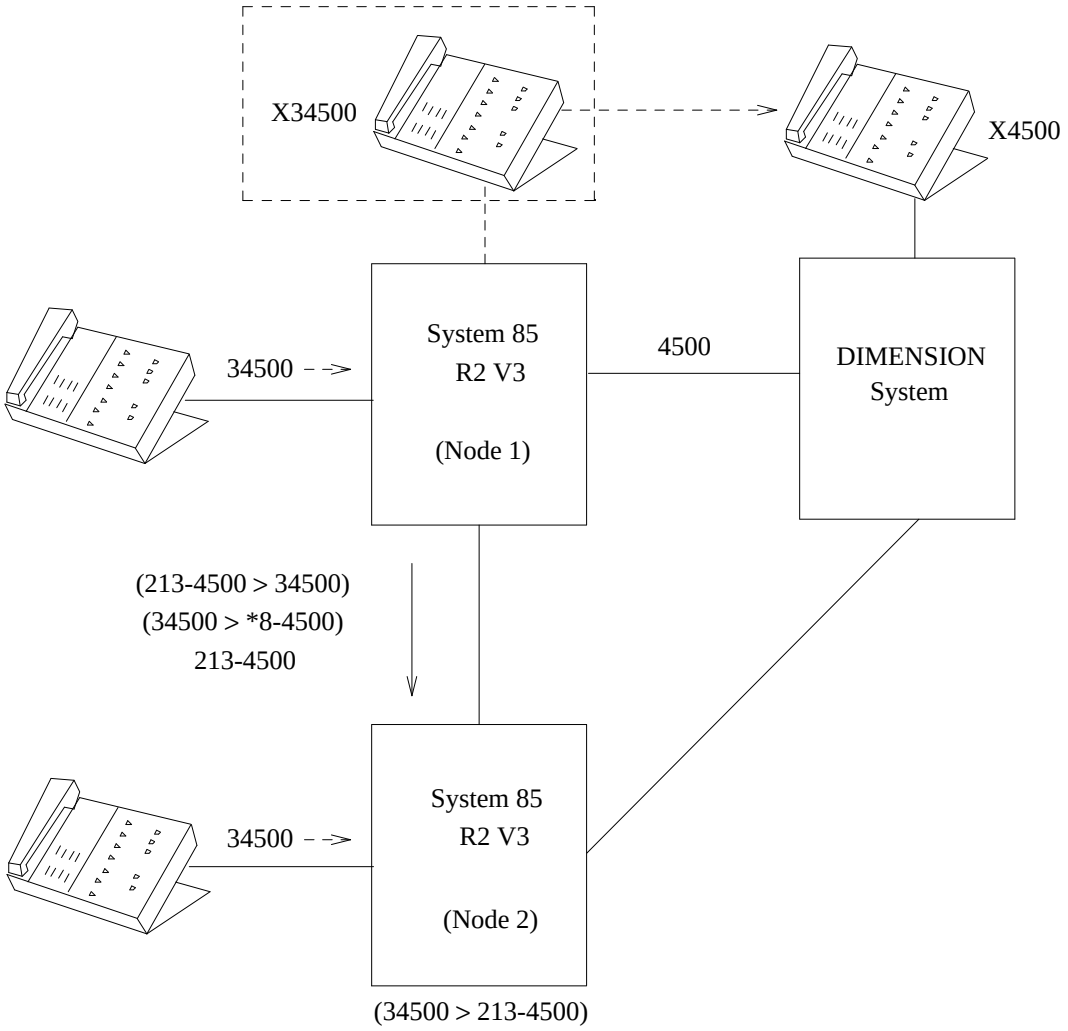

Figure 51-2. Extension Number Steering

Compatibility With Other Systems

Any System 85 can be upgraded to R2 V3 in order to support a 5-digit dialing plan and Extension Number Portability. This may require new hardware as well as new software and a 5-digit dialing plan.

Extension Number Steering Alternative

There will be cases where it is not practical to upgrade a system and incorporate a new dialing plan. In the case of a DIMENSION System or a System 75, Extension Number Portability is not provided. For these situations, **Extension Number Steering** can be used. Extension Number Steering does not provide the capacity of Extension Number Portability and is harder to implement and administer. For special cases, its use can be justified.

Figure 51-2 shows a DIMENSION System mixed with two System 85 R2 V3 switches in an ETN arrangement. A 5-Digit Dialing subnetwork and a portability subnetwork are set up using only System 85s (there is no node assignment for the DIMENSION System). A user can move from Node 1 of the portability subnetwork to the DIMENSION System. To make this move transparent to users at Node 1 and Node 2, the relocated user's extension number on Node 1 is assigned to Extension Number Steering. When Node 1 receives the digits 34500, it sends them out to the DIMENSION System for call termination. System 85 and DIMENSION Systems can add or delete digits from those received (subnetwork trunking). Therefore, the extension number 34500 is changed to a 4-digit extension number for use at the DIMENSION System switch. In the example in Figure 51-2, the user is assigned to extension number 4500 so that Node 1 can delete the initial digit 3 and send the remaining 4500.

A major difference between Extension Number Portability and Extension Number Steering is that with Extension Number Portability, the moved user could still reach other users on Nodes 1 and 2 by dialing their extension number. With portability, the move would be transparent to the moved user also. Using Extension Number Steering, the moved user must dial a complete 7-digit network number to reach users at Nodes 1 and 2. Also, users at the DIMENSION System should be aware of the moved user's new extension number. If they try to reach the moved user with the old extension number, the call routes to Node 1 and then reroutes back to the DIMENSION System. While such a routing works, it is wasteful of costly switch and tie trunk facilities.

5-Digit Dialing Plans

Prefix 5-Digit Dialing

In Release 2, Version 2, System 85 offered a 5-digit extension number dialing plan with the DCS feature. This method is referred to as prefix 5-digit dialing. In this method, a leading (fifth) digit was added to accommodate the larger number of extensions accessible through the DCS. This enables users to reach a specific extension on any node of the DCS by dialing an extension number. The leading digit is a prefix, used by the switch to identify which node of the DCS is to receive the call. Prefix 5-digit dialing uses *extension number steering* (also known as multidigit steering). Any number of digits, up to the full five, can be used to route a call to a specific extension on a specific node within the DCS. In larger DCSs, it is often necessary to route on the first two digits. It is desirable to keep the number of digits used for extension number steering purposes small (one or two). Using more digits for steering makes the overall numbering plan more complex and difficult to manage.

Unrestricted 5-Digit Dialing

With Release 2, Version 3 of System 85, a new form, called unrestricted 5-digit dialing, became available. In this form, the full five digits are used as a true extension number. With portability, any 5-digit extension number can reside at any node in the portability subnetwork. A single node could contain the extension numbers 45678 and 87654. With portability, extension number steering is not used. A new routing has been developed. When a 5-digit extension number is dialed, it is examined digit by digit to determine where in the subnetwork it resides.

This method can be used by any private network that wants a simplified dialing plan (5-digit extension number dialing rather than 7-digit private network number dialing). It is not restricted to a DCS, and it is not necessarily tied to the Extension Number Portability feature.

Architectural Requirements—The Numbering Plan

A portability subnetwork is designed as a single system. Otherwise, calls from outside the subnetwork would be difficult if not impossible to route properly. Switches outside of the subnetwork have no way of knowing where a particular extension is located within the subnetwork. The subnetwork is treated like a single switch. Because each node in the subnetwork is capable of routing a call to any terminal in the subnetwork, outside calls can be routed to the nearest node, and this node can perform the final routing.

Network Location Code Assignments

In an ETN, each system is assigned a set of RNXs (location codes). One RNX is the home-RNX, and the others are remote. A call using the home-RNX is terminated locally. The remote-RNXs indicate the call must be extended to another node, the node indicated by the particular RNX. A single network location code can handle up to 10,000 extension numbers. Systems with more than 10,000 are assigned multiple home-RNXs to handle each block of 10,000.

In a portability subnetwork, all nodes share a common set of home-RNXs. The final destination node for a call cannot be identified by simply reading the RNX associated with a call. One call to 320-1234 may go to Node 1 while another call to 320-1230 may go to Node 2. Figure 51-3 shows how this problem is resolved. The switches shown as Nodes 1, 2, and 3 form the portability subnetwork. The other switches are outside the portability subnetwork but are part of the 5-digit dialing ETN.

Each switch in the ETN contains a table with every assigned RNX showing whether these RNXs are home or remote. The two ETN switches outside the portability subnetwork (no node number shown) have their own home-RNX. To these switches, all other RNXs are remote. On the ETN switch at the top left, a call using RNX ‘420’ is routed to a local voice terminal. Calls using any other RNX are routed out to the next switch in the ETN. Since this switch is tied directly to only one other switch in the ETN (Node 2 of the portability subnetwork), all nonhome-RNX calls are routed there. This is normal ETN operation and has not yet been altered by the presense of the portability subnetwork. The ETN routing is altered, once a call is extended to a node in the portability subnetwork.

Notice that within the portability subnetwork (Nodes 1, 2 and 3) each RNX used within the portability subnetwork is assigned as a home-RNX to each switch. That is, all switches within the portability subnetwork share the same home-RNXs. This is done to allow any RNX-XXXX assigned within the portability subnetwork to reside on any node in that group. When one of the home-RNXs is received, the

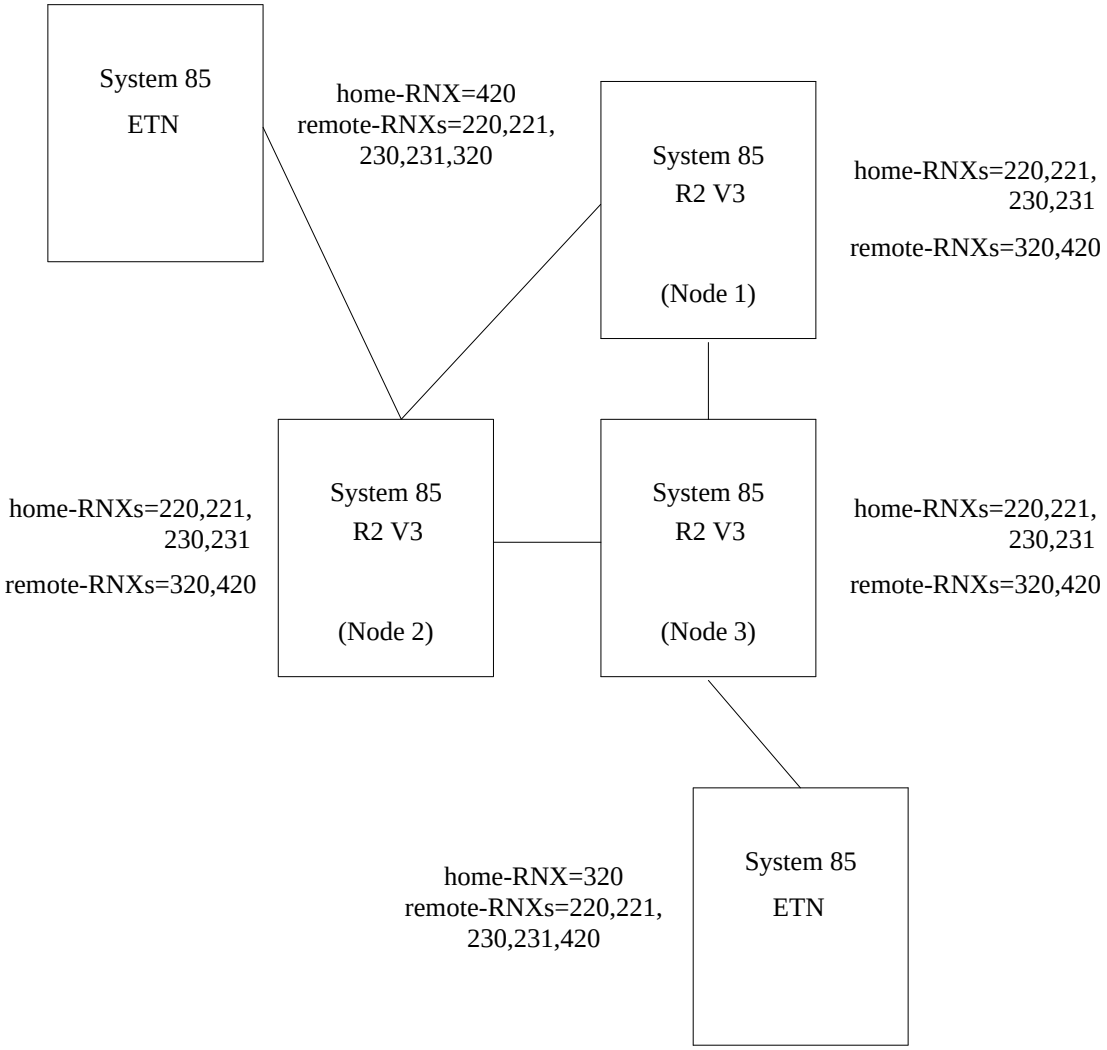

Figure 51-3. Network Location Code Assignments (RNXs)

portability subnetwork node routes the call to the correct portability subnetwork node. When a remote-RNX is received, the call is routed out of the subnetwork to the correct ETN node.

Subnetwork Extension Number Assignments

Within a portability subnetwork, each extension number is separately assigned on each switch. This allows each node to properly route any call to any extension within the subnetwork. Looking back to Figure 51-1, the extension numbering shown at each node is incomplete. The extension numbers shown are the extension numbers initially assigned to voice terminals at that node. Each node is also assigned all remote subnetwork extension numbers. The remote extension numbers are not associated with local voice terminals. Rather, they point to the node in the subnetwork where that extension number is actually located. When a subnetwork extension number is received, the digits indicate one of two types of routing:

— The extension number digits point to a local voice terminal. The call is terminated at the local node.

— The extension number digits point to a node. The digits are converted to a 7-digit private network number and routed by AAR to the appropriate node for final routing.

Ported Extension Numbers

When an extension number is ported to a new node, its voice terminal assignment must be removed at the old node. It is then reassigned as a remote extension number (assigned to a different node). The extension number is also removed from its remote node assignment at the new node and assigned as a local voice terminal. Since the same extension number has a node assignment at all the nodes in the portability subnetwork, this assignment change must be updated at all nodes. All nodes in the portability subnetwork must be made aware of the move.

Portability and Other Network Arrangements

Figure 51-4 shows an example of how a portability subnetwork is formed within an existing network of System 85s. In this example, the network uses the following System 85 characteristics:

— All switches are part of an ETN. This reduces long distance costs and simplifies dialing between dispersed locations. Network calls can be placed using 7-digit private network numbers (RNX-XXXX) rather than 10-digit public network numbers.

— The three switches located in Texas are in a DCS. This reduces dialing requirements between these switches and provides some feature transparency.

— The operations in Dallas and Fort Worth are closely related. Moves to and from these two cities are frequent, so these switches are formed into a portability subnetwork. These switches must be Release 2, Version 3 or later. The dialing plan for the DCS must use unrestricted 5-digit dialing.

In the example in Figure 51-4, a second portability subnetwork is set up between San Francisco and Sacramento, California. While Extension Number Portability allows users to move from San Francisco to Sacramento and retain their old extension number, ETN number, etc., these switches are not part of a DCS. Feature transparency is not provided as it is in the arrangement in Texas. While the DCS and Extension Number Portability features are fully compatible, they are not the same. These features can be used together on the same network, they can be used in partial conjunction with one another as in the Texas network in Figure 51-4, or they can be used completely independently of one another.

Feature History And Development

This feature was introduced in System 85 Release 2, Version 3.

USER OPERATING PROCEDURES

This feature does not require any new user operation procedures if 5-digit dialing is already in use. If not, users will have to be reminded that they need only dial a 5-digit extension number to reach users within the 5-digit subnetwork. The users may notice slightly longer call setup times, usually only a few seconds. This is because the systems use new call processing routines to examine dialed digits and make sure calls are routed to the right system in the subnetwork.

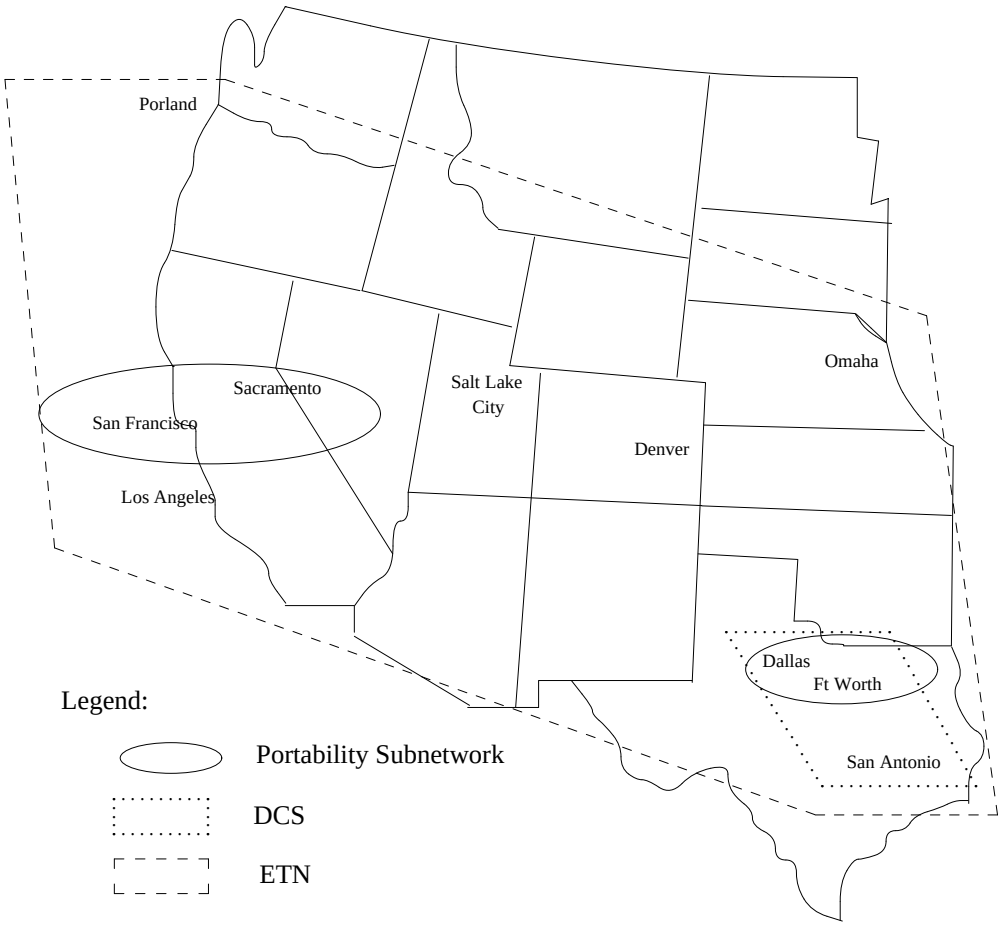

Figure 51-4. Mixing System 85 Networking Arrangements

CONSIDERATIONS

Although this feature has the distinct advantage in being able to move extension numbers along with users, several aspects of the system must be considered when evaluating its applications.

Effects on Tie Trunk Usage

Extension Number Portability requires each node (i.e., switch) in a portability subnetwork to be able to route calls out over tie trunks to any of the other nodes. For certain types of calls, this means that additional trunking facilities are required to complete the call. Normally, when a user moves, their number must change. Calls from the public or private network route directly to the user's new location. With portability, outside systems have no way of determining where a particular extension resides. The outside system routes the call to the nearest portability subnetwork node and lets it take care of the final routing. Since the extension may reside on another node, an additional trunk may be required to complete the call. This situation is shown in Figure 51-5. The solid line shows the routing of an incoming DDD call using the moved user's changed telephone number (no portability). The dashed line represents a call to the same user; only this time, the user kept their old telephone

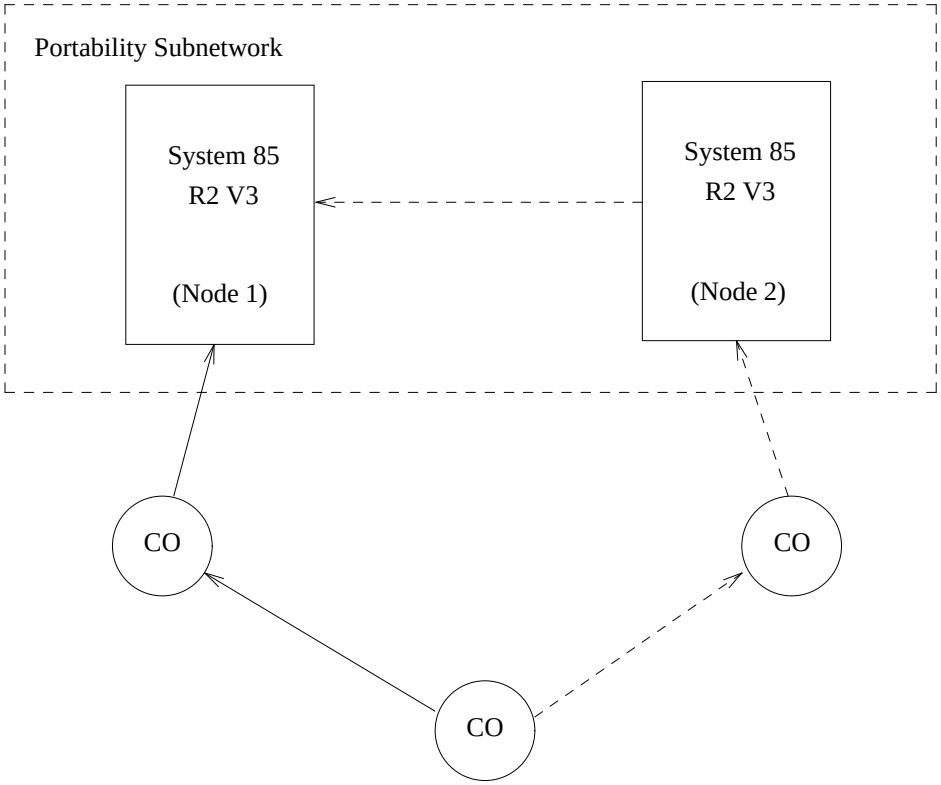

Figure 51-5. Call Routing With A Portability Subnetwork

number through portability. The nodes of a portability subnetwork may require additional trunk circuits to maintain the desired balance of facilities established by system engineering.

Effects on Voice Terminal Features

When moving to another node, the user must consider the effects the move will make on certain features. Some features cannot be used between nodes (e.g., Attendant Busy Lamp Field). Other features can as long as the nodes are part of a DCS (e.g., Call Forwarding). Still other features must be abandoned at the old node but can be reestablished using the facilities at the new node (e.g., Call Coverage). These aspects are further described in **Interactions**.

Effects on Switch Administration

Administration of the switches and the data that must be maintained at each node in the subnetwork is the main concern. In order to provide Extension Number Portability, each node in the subnetwork must maintain extension number assignments for all nodes. These assignments must be kept up-to-date. Thus, whenever an extension number is moved to a new node, each node in the subnetwork must be informed of the change. See **Feature Administration** for a more complete explanation.

INTERACTIONS WITH OTHER FEATURES

The following System 85 features affect or are affected by the operation of this feature.

5-Digit Dialing

5-Digit Dialing must be used on systems in a portability subnetwork.

Attendant Direct Extension Selection With Busy Lamp Field

The Attendant DXS/BLF feature does not support R2 V3 5-digit dialing. For systems with R2 V3 5-digit dialing, the Attendant DXS keys and BLF lamps are inoperative.

Attendant Display

When 5-Digit Dialing is used, the attendant console should have an 8-character alphanumeric display. The 4-character alphanumeric displays show only the first (leading) four digits of a 5-digit extension number. This is not sufficient to identify the extension.

AAR (Automatic Alternate Routing)

AAR must be used to route calls inside a portability subnetwork. Rather than assigning an RN(X) to the pattern, a node is assigned. Extension Number Portability requires routing decisions at several points in the digit-collection process. This results in additional call-setup time. (Touch-tone dialing is recommended to reduce the call-setup time as much as possible.)

ACD (Automatic Call Distribution)

Extension numbers residing at other nodes cannot be part of an ACD split at the local node.

AIOD (Automatic Identification of Outward Dialing)

The hardware associated with AIOD does not support 5-digit dialing. Only the four least significant digits of a 5-digit extension number are identified.

Bridged Call

Every image of an extension number must be removed from the old node before the extension number can be moved to a new node. Bridging from one node to another is not allowed.

Call Coverage

If an extension uses Call Coverage, the coverage assignment must be removed, or if it is part of a Coverage Group, it must be removed from the coverage group before it can be moved to a new node. The extension number can then be assigned to another coverage group at the new node.

Call Forwarding—Busy and Don't Answer

Call Forwarding—Busy and Don't Answer is not a transparent feature. Using this feature, calls cannot be forwarded to other nodes. Therefore, using this feature, an extension number that has been ported to another node cannot be a forwarded-to extension from the old node.

Call Forwarding—Don't Answer

Call Forwarding—Don't Answer is not a transparent feature. Using this feature, calls cannot be forwarded to other nodes. Therefore, using this feature, an extension number that has been ported to another node cannot be a forwarded-to extension from the old node.

Call Pickup

When an extension number is moved to a new node, it must be removed from its old pickup group and added to a new one, if desired.

Calling Number Display to Station

The hardware associated with this feature does not support 5-digit extension numbers. Digital terminals with the 40-character display must be used to display 5-digit extension numbers.

Conference—Attendant Six-Party

Only the attendant console and local voice terminal circuits can provide the disconnect supervision required to release a conference circuit once the conference is finished. Since the attendant may be unaware of which extension numbers are local and which ones have been ported (ported extensions connect to the local system via a tie trunk), all conferences should be held on the console until completion. If the attendant releases a conference from the console when only trunks are involved, the system drops the conference automatically to prevent the conference circuit from locking up.

DCS (Distributed Communications System)

A DCS does not provide full feature transparency. As indicated in other parts of this section on interactions, several features cannot be used between two different nodes. This must be pointed out because it is not readily apparent where any particular extension number resides. A user may try to activate some feature toward an extension number thinking that the extension number resides on the local system because it looks similar to their own. In most cases, it probably will. But if the extension number has been ported to another node, some types of feature activations toward this extension number are denied. Although the user must be removed from these features at the old node, they can be added to these same features at the new node, if provided.

Extension Number Steering

This feature can provide some degree of apparent portability for switches that are not part of the true portability subnetwork, but this is separate from the Extension Number Portability feature.

Hunting

An extension number must be removed from a hunt sequence before it can be moved to another node.

Intercom

An extension number must be removed from all intercoms before it can be moved to another node.

Last Number Dialed

The Last Number Dialed feature stores and redials 5-digit extension numbers dialed to voice terminals in a portability subnetwork.

Message Waiting—Automatic

The operation of Automatic Message Waiting is not changed; but with the expanded numbering plan in R2 V3 (possible 100,000 extension numbers), it takes longer to update the status of each AMW lamp.

Personal CO (Central Office) Lines

A user's Personal CO Line must be reassigned using a line to the CO serving the new node. This may require a number change.

Tenant Services

Because AAR is not a partitioned feature, an extension partition in a partitioned System 85 can only serve as a satellite location in a portability subnetwork. Therefore, Extension Number Portability is allowed as long as the ported number is consistent with the numbering plan in the partitioned switch. For example, the ported extension number is not allowed to duplicate an extension number in another partition. Also, the extension numbers in every extension partition of the partitioned switch and in the associated portability subnetwork must contain the same amount of digits (i.e, five digits).

Unattended Console Service—Preselected Call Routing

Unattended Console Service—Preselected Call Routing is not part of DCS transparency. The designated extension number cannot be moved to a new node and still function as the night station for the old node.

Variable Format Call Detail Recording

Each switch in a portability network is assigned a node number. A data item in the CDR is provided which contains this node number so that, if necessary, subsequent accumulation of records from switches carry an identifying field from which a multinode call can be reconstructed. This field contains the value of the node number assigned in Procedure 275, Word 3.

HARDWARE REQUIREMENTS

Additional tie trunk circuits (SN233) may be required to support the internode traffic imposed by Extension Number Portability.

FEATURE ADMINISTRATION

Extension Number Portability is administered using the MAAP (Maintenance and Administration Panel). Certain administration can also be performed by the customer using the SMT (System Management Terminal) or using the AP (Applications Processor) System Management applications. This feature can also be administered using CSM (Centralized System Management).

Each switch in the portability subnetwork must be administered properly so that each switch is capable of routing calls to the correct user; wherever in the subnetwork they may be located.

Initial Administration for the Subnetwork

The following administration must be performed at each system in the portability subnetwork.

Procedure 275, Word 3—System COS - Miscellaneous — Multimachine nodes:

a. Type 2 (Portability) or Type 3 (DCS and Portability)

b. Local switch number (unique node number for this system).

Procedure 285, Word 1—System COS - Network — Network Uniform Numbering Plan:

a. Number of digits in location code - 3

b. Number of extension digits - 4.

This administration is required to support 5-digit dialing.

Procedure 350, Word 1—Dialing Plan - First Digit — In System 85 R2 V3, any digit 0 through 9 can be assigned as the first digit of a group of extension numbers. These assignments must be common to all nodes in the portability subnetwork.

a. First digit - 0 through 9 assigned one digit at a time with the following characteristics:
   Number of digits - 5
   Call type - 1.

Procedure 354, Word 1 — Extension Number Groups — Each extension number in the subnetwork must be assigned at each node in order to be portable. Extension numbers are initially assigned in groups. Extension number groups assigned to voice terminals at other subnetwork nodes must be assigned a node number.

a. First Extension Number of the group (e.g., 70000)

b. Last Extension Number of the group (e.g., 79999)

c. Node Number (1 to 999).

The extension numbers assigned to the local node can be assigned to features, restrictions, groups, etc. Remote extension numbers are assigned to their respective nodes so that calls to these numbers can be translated into a 7-digit ETN number for routing to that node.

Procedure 321, Word 4—Automatic Alternate Routing—Routing — Each RNX used by the portability subnetwork must be assigned as a 'home' RNX at each node. Other RNXs are assigned to another node within the DCS, ETN, or AUTOVON arrangement.

a. Location code - Either home or remote to the subnetwork, enter one at a time

b. Node number - Remote DCS, ETN, or AUTOVON node for remote location codes

c. Pattern Number - AAR pattern used to route calls using the displayed RNX

d. First digit - Used for home-RNXs, the digit prepended to last four digits of the uniform number to form a 5-digit extension number.

Procedure 322, Word 1 — The RNX assigned to the first or first/second digit of an extension number. Used to convert 5-digit subnetwork extension numbers into 7-digit uniform numbers for routing between subnetwork nodes.

a. First Digit

b. Second Digit (optional)

c. Location code (RNX).

Porting an Extension Number to a Different Node

Whenever an extension number is moved to a different node, each node must be administered in one of three ways:

- As the node which presently homes the extension number
- As the new home node
- As an uninvolved node.

The only administration required at an uninvolved node is the assignment of the extension number to a node. The individual extension number, rather than a group, is assigned to a new node in Procedure 354, Word 1.

At the old home node, the extension number must be removed from all line, feature, and group assignments; and the node assignment must be changed from the old node to the new node in Procedure 354, Word 1.

At the new home node, the node assignment for the extension number is changed to the local node; and the extension number is assigned to features, restrictions, etc.

MAAP AND SMT PROCEDURES — EXTENSION NUMBER PORTABILITY

PROCEDURE	WORD	PURPOSE	SMT
275	3	Assigns the node number and type of system.	Yes
285	—	Assigns the number of digits in the location codes and extension numbers of a network. Must be 3 and 4, respectively, for 5-Digit Dialing.	Yes*
321	4	Assign the relationship between an RNX, a node, an AAR pattern, and first digit.	Yes
322	1	Assign RNX translation to remote nodes.	No
350	1	Assigns the first digit and length of extension number.	No
354	1	Assign extension number groups or ported extensions to nodes.	No
354	2	Assign Extension Number Steering for 4-digit portability and portability for extension numbers outside of a portability subnetwork.	No

* Display only procedure for the SMT.

The following are the applicable CSM Command Paths utilizing the **admin** area of TCM or FM.

CSM SCREENS — MASKS EXTENSION NUMBER PORTABILITY		
APPL'N	**OBJECT**	**PURPOSE**
TCM/FM	sys-cos	Administers the node number and the type of system, and assigns the number of digits in the location codes and extension numbers of a network. Number portability is only applicable if multipremise is specified in the Network COS, and if a 5-digit dialing plan has been administered. Assigns the number of digits in location codes and extension numbers of a network.
FM	aar-pattern	Assigns the relationship between an RNX, a node, an AAR pattern, and the first digit.
TCM/FM	first-digit	Administers the first dialed digit in the dialing plan, and determines the length of the extension numbers.
TCM	number-grps	Administers extension number groups or ported extensions to nodes.
TCM	dac-to-extension	Creates association between an extension or steering code and a DAC.
FM	station-no-steering	(System 85 R2 V3 and V4) Creates association between an extension and an office location code (RNX). When an extension is associated with an RNX, the extension is then in a steering state.
FM	portability-routing	Administers the first and thousandth digit mapping to a location code (RNX), which is needed for administering Extension Number Portability on a number portability network.

FACILITIES RESTRICTION LEVEL

DESCRIPTION

The FRL (Facilities Restriction Level) provides access control and protection from unauthorized use for private switch and network facilities. Each originating facility (voice and data terminals, incoming trunk, remote access trunks, and attendant positions) is assigned an FRL. Each trunk group in an AAR (Automatic Alternate Routing) or ARS (Automatic Route Selection) pattern is also assigned an FRL. However, since a particular trunk group can be assigned to more than one routing pattern, its FRL may be different in different routing patterns. To illustrate, a public network trunk group may have an FRL of five in an AAR pattern and an FRL of two in an ARS pattern.

When a user places a call, the switch selects a routing pattern based on the dialed digits. The switch compares the FRL assigned to the calling facility (*the default FRL*) to the FRL of the first-choice trunk group. The call can only access trunk groups that have an FRL lower than or equal to the FRL of the originating facility. If the call has a high enough FRL to access the first-choice trunk group, the switch checks for an available trunk. If all trunks are busy, the switch checks each alternate trunk group to which the call has access.

Authorization Codes

If a call cannot be routed using the default FRL and a higher FRL would allow access to more trunk groups, the switch prompts the caller for an authorization code. An authorization code allows a caller to override the FRL assigned to the terminal being used. For instance, an executive may wish to override the authorization code assigned to another person's terminal or one available to the general public. The Authorization Code is assigned its own FRL, and when used, that FRL is substituted for the default FRL of the terminal to allow the search for an outgoing trunk facility to continue. See the Authorization Code feature for further details on this option.

Hierarchy of Levels

There are eight levels of facility restriction (0 through 7); zero provides the lowest level of access, and seven provides the highest. For example, trunk facilities could be assigned FRLs as follows:

FRL	Calling Privileges
0	Local (intraswitch)
1	Private network
2	FRL #1 + local public network
3	FRL #2 + FX
4	FRL #3 + WATS, Band 1
5	FRL #4 + WATS, Bands 1 and 2
6	FRL #5 + WATS, (All Bands)
7	FRL #6 + DDD

Normally, most private network trunk groups will have low FRLs. Premium trunk groups including public network trunk groups with toll calling access will usually have higher FRLs. Using this scheme, most employees can make private network calls while only employees with access to high enough FRLs can access the public network. Assigning expensive public network (FX and WATS) and sensitive private network trunk groups high FRLs limits access to these facilities. Incoming trunk groups (tie trunks and remote access trunks) can be set up so that the switch always requests an authorization code.

Alternate FRLs

Alternate FRLs are used to change access controls for periods of other than normal activity (i.e., evenings or weekends). Alternate FRLs are associated with primary FRLs, and when invoked, change the FRL for any facility or authorization code assigned the primary. To activate or deactivate the alternate FRLs, the attendant simply presses a button on the attendant console. Alternate FRLs can be higher, lower, or the same as the primary FRLs they replace. Less restrictive alternate FRLs can, for example, permit access to public network trunk facilities on the weekend or after business hours when long-distance toll rates are at their lowest. Consequently, terminal users normally denied public network calling privileges can now place these calls. More restrictive alternate FRLs can be turned on after business hours to prevent unauthorized personnel from making long-distance calls.

TCM (Traveling Class Mark)

When an AAR (Automatic Alternate Routing) or ARS (Automatic Route Selection) call routes to another network switch (ETN) by way of a tie trunk, the final digit sent is the TCM. Network switches use this digit in place of the FRL of the tie trunk to determine which facilities the call can access. The TCM is only sent from one tandem switch to another over tie trunks administered as ‘‘network tandem.’’ The TCM is based on the FRL of the call at the originating switch and corresponds to either the default FRL of the originating facility or the FRL of an Authorization Code, if required to complete the outgoing connection.

Feature History and Development

The FRL feature was first available in Release 1. The Authorization Codes feature, a companion feature to the FRL feature, was enhanced in Release 2, Version 3. Otherwise, there have been no changes to this feature since its introduction.

USER OPERATIONS

The basic FRL feature is automatic, and its operation is transparent to the user.

To Activate Alternate FRLs:

- Press the ALTERNATE FRL button. [ALTERNATE FRL lamp lights.]

To Deactivate Alternate FRLs:

- Press the ALTERNATE FRL button. [ALTERNATE FRL lamp goes out.]

To Use an Authorization Code FRL:

- Place the call in the normal manner. [Call-progress tone]

  (If an authorization code is needed, recall tone is returned followed by second dial tone.)
- Enter your assigned Authorization Code. [Call-progress tone]

CONSIDERATIONS

Hard and Soft Processor Swaps

FRLs, Alternate FRLs, and Authorization Code FRLs are stored in a translation portion of switch memory. Therefore, these assigned FRLs will endure a hard processor swap.

Alternate FRL activations are stored in a status portion of switch memory. Therefore, if an attendant activates Alternate FRLs and then a hard processor swap occurs, Alternate FRLs will not be active after the swap is finished.

INTERACTIONS WITH OTHER FEATURES

The following System 85 features affect or are affected by the operation of the feature.

ACD (Automatic Call Distribution)

When interflowed ACD calls use the AAR or ARS feature to route these calls outside the local switch, the FRL of the split's supervisor is used to determine whether these calls can use the available network facilities.

Bridged Call

An FRL is assigned to a class of service in Procedure 010, Word 3. The class of service is then assigned to an extension in Procedure 000, Word 1. When an FRL is assigned to a *shared extension*, the calling privileges granted by the FRL apply to every image of the extension.

Call Vectoring

In Procedure 010, Word 3, an FRL can be assigned to VDNs for use with the Route-To command. The FRL of a VDN is used to determine whether the call is allowed to route over available network facilities.

Data Communications Access

Facilities Restriction Levels (FRLs) provide a means of restricting terminal access to trunk groups via the Automatic Alternate Routing (AAR) feature. The DCA trunk group(s) is placed in a separate AAR pattern to which an FRL is assigned. When calling the DCA number, the user's FRL is compared to the FRL of the AAR pattern before access to the DCA port is granted. The attendant can also use the alternate-FRLs attribute to alter these restrictions when appropriate.

EUCD (Enhanced Uniform Call Distribution)

When interflowed EUCD calls use the AAR or ARS feature to route these calls outside the local switch, the FRL of the split's supervisor is used to determine whether these calls can use the available network facilities.

Host Computer Access

Each Host Computer Access trunk group can be assigned an FRL to restrict certain users from access to the host computer. An attendant or the switch administrator (user of Applications Processor System Management applications) can invoke an alternate set of FRLs when desired.

Variable Format Call Detail Recording

In switches that use FRLs, a call record stores the FRL for a call that uses an FRL for routing.

HARDWARE REQUIREMENTS

None.

FEATURE ADMINISTRATION

Assignment of the Facilities Restriction Level is on a per-line class of service and per-trunk group basis. The customer can partially administer this feature using the SMT (System Management Terminal), TCM (Terminal Change Management), or FM (Facilities Management) features. This feature can also be administered using CSM (Centralized System Management).

The following are the applicable MAAP and SMT procedures.

MAAP AND SMT PROCEDURES — FACILITIES RESTRICTION LEVEL			
PROCEDURE	**WORD**	**PURPOSE**	**SMT**
000	1	Assigns a class of service to an extension number.	Yes
010	3	Assigns an FRL to a line class of service for a terminal.	Yes
103	—	Administers network trunk group parameters including: • Minimum FRL, authorization code requirements • Incoming tie trunk access to AAR and ARS • The number of trunks that are reserved for first-choice AAR and ARS trunk groups. If fields 3 and 4 of this procedure are both set to ‘‘1,’’ the trunk group (Field 1) is defined as network tandem, and the switch always sends a Traveling Class Mark.	Yes
200	—	Assigns an FRL to an attendant console.	No
203	—	Assigns the Alternate FRL button to the attendant console(s). The applicable encode is as follows: 19 Alternate FRL.	No
283	1	Displays the extension numbers, trunk groups, or authorization codes associated with a specific FRL.	Yes
286	1	Administers alternate FRLs.	Yes
309	1	Assigns an FRL to a trunk group in an ARS pattern.	Yes
321	1	Assigns an FRL to a trunk group in an AAR pattern.	Yes

The following are the applicable TCM path names used with the AP 16.

TCM SCREENS — FACILITIES RESTRICTION LEVEL	
PATH NAME	**PURPOSE**
terminal-change class-of-service attributes	Use this screen to display and change the FRL associated with a line class-of-service.
terminal-change extensions facility-restriction	Displays or prints a report of the extensions with an assigned FRL.

The following are the applicable FM path names used with the AP 16. A printed report of the displayed information can also be generated.

FM SCREENS — FACILITIES RESTRICTION LEVEL	
PATH NAME	**PURPOSE**
facilities-mgmt facility-rstr trunk-groups	Displays and changes the FRL assigned to a trunk group(s).
facilities-mgmt facility-rstr extensions	Displays and changes the FRL assigned to an extension(s).
facilities-mgmt facility-rstr alternate-set	Displays, changes, turns on, and turns off alternate FRLs.

The following are the applicable CSM Command Paths utilizing the **admin** area of TCM or FM.

CSM SCREENS — MASKS FACILITIES RESTRICTION LEVEL		
APPL'N	**OBJECT**	**PURPOSE**
TCM	extension	Assigns a class of service to an extension number.
TCM	class-of-service	Assigns an FRL (0-7) to a line class of service for a voice terminal.
FM	trk-grp	Administers network trunk group parameters which include: — Minimum FRL, authorizations code requirements — Incoming tie trunk access to AAR and ARS — The number of trunks reserved for first-choice AAR and ARS trunk groups.
TCM	console-features	Assigns an FRL to an attendant console(s).
TCM	control-keys	Assigns the Alternate FRL button to the console(s). When a feature is assigned to a console, it is activated on all consoles on a switch.
FM	alt-frl	Administers the Alternate FRLs associated with trunk group FRLs 0 through 7. One transaction can change the alternate FRL associated with one FRL, some FRLs, or all FRLs.
FM	ars-pattern	Administers an FRL of a trunk group(s) that is in an ARS pattern.
FM	aar-pattern	Administers an FRL of a trunk group(s) that is in an AAR pattern.

See the Authorization Codes feature for administration of that related function.

FORCE ADMINISTRATION DATA SYSTEM

DESCRIPTION

The FADS (Force Administration Data System) feature collects and stores traffic-related information for CAS (Centralized Attendant Service) and/or for UCD (Uniform Call Distribution) groups. This information allows the customer to intelligently adjust the make-up of the CAS attendants and/or UCD groups to suit the call-load requirements.

> **NOTE:** The UCD feature is not available in switches after Release 2, Version 1. The call distribution services provided by UCD have been replaced and enhanced first by the EUCD feature (Release 2, Version 2) and subsequently by the ACD feature (Release 2, Version 3). The following material that relates FADS to UCD should not be construed as a current offering. This material is meant to serve as a reference source for those using earlier software packages. The FADS feature may be used to monitor CAS traffic activity in all software packages.

FADS Output

Output of FADS information is available from a display unit or in hard-copy form obtained from an optional printer. The traffic records available contain information such as:

- Calls attempted
- Calls completed
- Call attempts abandoned, and
- The amount of time that calls remain in queue.

The Display Unit: The FADS display unit consists of a 4-digit display field, a 3-digit display field, and a touch-tone dialing pad. The dialing pad is used to request a display of individual traffic items or to request a complete printout of every traffic item.

Display Unit Commands: The commands that control the FADS display unit are easily executed on a display unit dialing pad. A command is executed with one or two button presses. As an example, some of the basic commands are:

- Pressing the ‘‘*’’ button clears the previous command and displays the time of day.
- The command ‘‘* 9’’ displays the number of abandoned calls to a group.
- The ‘‘#’’ button may be used alone or in conjunction with the digits (e.g., ‘‘# 3’’) to test the display unit.
- The command ‘‘* 6’’ requests a complete printout of the current traffic information.

Other commands are available and can be found in the appropriate user’s documents.

Display Time Out: When executing commands on the display unit, the maximum display time for an item is 60 seconds. If another command is not executed within 60 seconds, the display goes blank.

Traffic Data

The system records time in CCS (hundred call seconds) where 1 call lasting 100 seconds equals 1 CCS. The FADS feature collects and compiles information on an hourly basis.

While this feature is intended primarily to measure traffic data for CAS and UCD group calls, the FADS feature also measures regular traffic data for attendant-related calls.

CAS Traffic Data

The traffic data for CAS calls include:

- Number of calls handled by each attendant
- Total time (expressed in CCS) that an attendant is busy processing calls
- Number of calls received from each branch location over release link trunks
- Total calls received from all branch locations
- Total time (expressed in CCS) that each branch location's release link trunk handles calls
- Total calls placed in queue waiting for the attendant to answer
- Total time (expressed in CCS) that all calls remain in the attendant queue
- Total times a caller hangs up while the call is in queue before the attendant answers.

UCD Traffic Data

The traffic data for UCD calls include:

- Number of calls handled by each group member
- Total calls handled by all members of a group
- Total time (expressed in CCS) that a voice terminal group member is busy processing group calls
- Number of incoming calls received over each dedicated UCD trunk group
- Total incoming trunk calls received over all dedicated UCD trunk groups
- Total traffic handled by each dedicated UCD trunk group (expressed in CCS)
- Number of calls placed in queue for a group (every UCD call enters the queue)
- Total time (expressed in CCS) that calls remain in a UCD group queue
- Number of times a caller hangs up while the call is waiting in queue before a UCD group member becomes available.

CONSIDERATIONS

Measurement Limits

The FADS feature only measures the first 12 UCD groups. Forty group members can be measured in each of the first four groups. Twenty-four group members can be measured in groups 5 through 12. The FADS feature does not measure groups or group members in excess of these parameters.

The FADS feature is able to measure Direct Inward Dialing trunks.

Display Units

The maximum number of display units per system is 13: 1 unit for CAS and 1 for each of the 12 UCD groups.

Report Retension

After compiling the hourly traffic reports, the FADS feature retains the reports for 1 hour for inspection and/or printing.

UCD Group Administration

The UCD groups should be administered to FADS channels consecutively (e.g., 1, 2, 3, 4, 5, 6, 7 instead of 1, 3, 4, 7, 9, 11, 12). If not, the Queue Usage Count will not be measured.

Button Response Time

The buttons on the FADS display unit should be held down long enough for the system to recognize that a button has been pressed. This time is usually short enough not to be noticeable. However, during heavy traffic periods, it may be necessary to hold the buttons down slightly longer than during light traffic.

With the printer turned on, it is necessary to pause briefly between button presses on the display unit. This is because the printer responds more slowly than the display unit. Rapid button presses may result in the printer missing a request for service.

INTERACTIONS WITH OTHER FEATURES

None.

HARDWARE REQUIREMENTS

The FADS feature requires the following additional or special hardware.

- A 102F1-A display unit for CAS
- A 102G1-A display unit for each UCD group measured (maximum 12)
- A 211A power unit for each display unit used (maximum 13)
- A KS-19252, L7 adapter for each display unit used (maximum 13)
- A TN403 low-speed data channel per display unit used (16 channels per TN403)
- A 9042-2 ADDMASTER* printer (optional) for each display unit (maximum 13).

FEATURE ADMINISTRATION

Assignment of this feature is on a per-system basis when used with CAS. When used with UCD, assignment of the feature is on a per-UCD group basis. The customer can partially administer this feature using the SMT (System Management Terminal).

The following are the applicable MAAP and SMT procedures.

MAAP AND SMT PROCEDURES — FORCE ADMINISTRATION DATA SYSTEM			
PROCEDURE	**WORD**	**PURPOSE**	**SMT**
253	—	Administers a data channel circuit of a TN403 circuit pack.	No
284	—	Sets the software clock.	Yes
426	—	Administers feature assignments for FADS.	Yes

* Registered trademark of Addmaster Corporation.

FOREIGN EXCHANGE ACCESS

DESCRIPTION

The FX (Foreign Exchange) Access feature provides connectivity to CO (Central Office) trunks from areas outside of the local service area where the System 85 switch is located. This feature provides the same functionality to the FX CO service area as is provided by local CO trunks in the local dialing area. This includes use of features such as DID (Direct Inward Dialing), DOD (Direct Outward Dialing), LDN (Listed Directory Number), Remote Access, and Personal Central Office Line.

Use of the FX Access feature in effect extends the ‘‘free’’ dialing area to the exchange served by the FX CO. This can represent a significant cost savings where considerable business is done in an area that otherwise would require toll call access.

Feature History and Development

This feature was first available in System 85 with R1. It was included in a feature called Public Network Access and was reintroduced in Release 2, Version 3 under the name Foreign Exchange Access. It has otherwise remained unchanged since its introduction.

USER OPERATIONS

The following are the user operating procedures for this feature.

Attendant Handling of Incoming Calls

- Press the associated switch loop key or ANS key. [PA lamp goes out.] (Calling party is connected to attendant.)
- Obtain the desired destination for the incoming call.
- Press the START key. [Dial tone]
- Press the appropriate DXS key, or
- Dial the desired extension number. [Call-progress tone, RING lamp lights.]
- Press the RELEASE key. [PA lamp lights.]

Attendant Handling of Outgoing Calls

- Obtaining necessary calling instructions:

— If ADTGS (Attendant Direct Trunk Group Selection) is available:

  - Press the appropriate FX trunk group key. [Dial tone]

— If ADTGS is not available:

  - Press the START key. [Dial tone]
  - Dial the FX trunk group access code. [Second dial tone]

— Depending on calling instructions:

  - Press the HOLD key to remain connected to the call and finish dialing the destination number (or set up a conference call if desired), or
  - Press the RELEASE key to drop from the call and allow the calling party to finish dialing.

Direct Outward Dialing FX Access Calls

- Go off-hook. [Dial tone]

— If a FX feature button is assigned to the voice terminal, the terminal has a FX Private CO (Central Office) Line appearance:

  - Press the feature button. [Dial tone]

— If a feature button is not available:

  - Dial the FX trunk access code. [Dial tone]

— When dial tone is returned on the FX connection:

  - Dial the desired destination number. [Call-progress tone]

CONSIDERATIONS

Access Code

The AAR (Automatic Alternate Routing) and ARS (Automatic Route Selection) features are often used to provide FX Access. When this is done, a separate FX Access code is not used.

Hard and Soft Processor Swaps

Stable calls over FX trunk groups endure a hard processor swap. However, calls cannot be placed over FX trunk groups during a hard processor swap.

INTERACTIONS WITH OTHER FEATURES

The following System 85 features affect or are affected by the FX Access feature.

DID (Direct Inward Dialing)

Using incoming (or 2-way) FX trunks, the DID feature can be used by a caller in the FX CO service area to reach a specific station on the System 85 switch.

DOD (Direct Outward Dialing)

Using outgoing (or 2-way) FX trunks, the DOD feature is used by System 85 users to call stations served by the FX CO over FX Access trunks.

ISDN (Integrated Services Digital Network)/PRI (Primary Rate Interface)

The FX feature is compatible with the ISDN Interface feature. However, FX service is not currently being offered on a Call-By-Call Service Selection basis. This means that an ISDN T-1 carrier can provide FX service on an all or nothing basis only. This is a constraint of the public network and not of the System 85 switch or ISDN. System 85 will support FX Service on a Call-By-Call Service Selection basis when it is available from the network.

Multiple Listed Directory Numbers

The MLDN feature can be used to direct incoming FX Access calls to the attendant queue.

Remote Access

The FX Access feature is fully compatible with the Remote Access feature. That is, based on restrictions applied, incoming FX Access calls can use the Remote Access feature and Remote Access calls to the switch can use outgoing FX Access trunks.

RESTRICTING FEATURE USE

The Restriction—Voice Terminal Restrictions and the Attendant Control of Voice Terminals features can be used to restrict individual station access to FX Access trunks.

The Miscellaneous Trunk Restrictions and Code Restriction features can be used to restrict access to FX Access trunks on a more generalized basis.

If FX Access is via AAR or ARS, the FRL (Facilities Restriction Level) and Authorization Code features can be used to restrict access to these trunks.

HARDWARE REQUIREMENTS

The FX Access feature uses the following specific hardware.

- SN230, Trunk Circuit Pack (four circuits per circuit pack).

FEATURE ADMINISTRATION

Assignment of the FX Access feature is on a per-system and per-trunk group basis.

The customer can partially administer this feature using the SMT (System Management Terminal) and the TCM (Terminal Change Management) feature. This feature can also be administered using CSM (Centralized System Management).

The following are the applicable MAAP and SMT procedures.

MAAP AND SMT PROCEDURES — FOREIGN EXCHANGE ACCESS			
PROCEDURE	**WORD**	**PURPOSE**	**SMT**
010	3	Assigns trunk restriction group and FRL to a line class of service.	Yes
100	1	Assigns trunk group dial access code, route advance sequence, and trunk type.	No
101	1	Assigns trunk group features.	No
102	—	Assigns Miscellaneous Trunk Restrictions (if desired).	Yes
103	—	Assigns trunk group FRL.	Yes*
115	—	Assigns incoming termination to a trunk group (if desired).	No
150	—	Administers trunk group number and unattended console service to the equipment location.	No
202	—	Assigns trunk group to Attendant Trunk Group Select keys and trunk group warning levels.	No
204	—	Administers the ICI (Incoming Call Identification) for the Attendant Console.	No
* Display only.			

The following is the applicable TCM path name used with the AP 16.

TCM SCREEN — FOREIGN EXCHANGE ACCESS	
PATH NAME	**PURPOSE**
terminal-change class-of-service attributes	Assigns miscellaneous trunk restrictions and FRL to a line class of service.

The following are the applicable CSM Command Paths utilizing the **admin** area of TCM or FM.

CSM SCREENS — MASKS FOREIGN EXCHANGE ACCESS		
APPL'N	**OBJECT**	**PURPOSE**
TCM	class-of-service	Assigns trunk restriction group and FRL to a line class of service.
FM	trk-grp	Administers FX trunk-group members and defines features of the trunk group. Administration of the trunk-group members include: trunk-group dial access code, route advance sequence, trunk type, trunk-group features, and trunk-group FRL. Also, assigns the trunk-group number and the unattended console service to an equipment location.
FM	misc-trk-rst-grp	Associates trunk groups to MTRGs (Miscellaneous Trunk Restriction Groups).
FM	term-trk-grps	Administers incoming termination to a trunk group (if required).
TCM	direct-trk-grp-keys	Assigns trunk group to Attendant Trunk Group Select keys and trunk group warning levels.
TCM	console-messages	Administers the ICI (Incoming Call Identification) for the Attendant Console.

HOLD

DESCRIPTION

This feature allows a voice terminal user to hold incoming, outgoing, or intraoffice calls. This frees the same extension number to originate another call, activate a feature, or return to a previously held call. This last capability also allows a user to alternate between two calls, holding one while connected to the other. Additionally, an existing call can be placed on hold to prevent the held party from overhearing office discussions.

A call is held differently on different types of voice terminals. Users of single-appearance voice terminals (2500, 7101A, and 7103A) can place a call into ‘‘soft hold’’ by pressing the RECALL (R) button or by momentarily pressing the switchhook. At this point, the user can either access a limited set of System 85 features or place the call into ‘‘hard hold.’’ (If the user goes on-hook, the soft held call is lost.) The hard hold function, however, places the call into a more durable hold state using an access code. (The 7103A voice terminal may have a HOLD button that dials the access code automatically.) Using the hard hold function, the user can access more features than would otherwise be allowed with soft hold. The call remains in hard hold until the access code is redialed or until the user goes on-hook.

Users of multiappearance voice terminals can conveniently and immediately place a call into the hard hold state using the HOLD button.

Feature History and Development

This feature was first available on System 85 in Release 1. The changes to this feature since Release 1 are as follows:

- During the Release 2, Version 2 time frame (but not initially in Version 2), the ability to use the Call Hold access code was added. This enhancement was retrofitted on switches back to Release 1, Version 2.

USER OPERATIONS

The following are the user operating procedures for this feature.

To Hold a Call

At a 2500 voice terminal without an R button:

- Be sure there is a 2-way connection.
- Press the switchhook for about half a second (from 0.2 seconds to 1.2 seconds). [Recall dial tone]
- Dial the Call Hold access code. [Dial tone]
- Perform other desired actions.

At a 2500 with an R button, 7101A, or 7103A voice terminal:

- Be sure there is a 2-way connection.
- Press RECALL or R. [Recall dial tone]
- Dial the Call Hold access code or press HOLD on a programmed 7103A terminal. [Dial tone]
- Perform other desired actions.

At a multiappearance voice terminal:

- Be sure there is a 2-way connection.
- Press HOLD. [The green status lamp flutters.]
- Perform other desired actions.

To Return to the Previously Held Call

At a 2500, 7101A, or 7103A voice terminal:

- Go on-hook. [System rings back with the held call.]

At a 2500 voice terminal without an R button:

- Momentarily press the switchhook. [Dial tone]
- Dial the Call Hold access code. [System connects with the held call.]

At a 2500 with an R button, 7101A, or 7103A voice terminal:

- Press RECALL. [Dial tone]
- Dial the Call Hold access code. [System connects with the held call.]

At a multiappearance voice terminal:

- Press the appearance button of the held call. [System connects with the held call.]

CONSIDERATIONS

Attendant Calls

Attendant calls cannot be placed on hold by a voice terminal user.

Trunk Restrictions

The Hold feature cannot be used by a voice terminal when connected to an attendant console, a

recorded announcement, a recorded telephone dictation trunk, or a loudspeaker paging trunk.

Reconnection to Held Calls

A single-appearance terminal user may hold only one call at a time. If the user completes the conversation, flashes the switchhook or presses RECALL, then dials the Call Hold access code, the user is reconnected with the held call. If the user goes on-hook after completing the conversation, the switch attempts to ringback the user with the held call. This reduces the possibility of losing held calls. However, queued or waiting calls may be serviced before the held call. Using the Call Hold access code ensures being reconnected to the held call.

Alternating Between Two Calls

A user of a single-appearance terminal can alternate between two calls, holding one while speaking to the other. All three parties may not be placed on the same talking connection. The two held calls cannot be connected together.

A user of a multiappearance voice terminal can also alternate between two calls. Moreover, this user can place all three parties on the same talking connection by placing one of the parties on hold using the CONFERENCE button, manually selecting the appearance with the other held party, and pressing the CONFERENCE button again. (See the Conference—Three party feature for a description of the user operation for conferencing.)

Deactivation of Hold

This feature is deactivated when the held call is retrieved and no other call is present. Also, the feature is deactivated if the held party abandons the call by going on-hook. A new call must be placed to contact the party.

RECALL Button and Switchhook Functions

A switchhook should only be pressed from 200 milliseconds to 1200 milliseconds. A switchhook pressed for more time will cause a disconnect. A switchhook pressed for less time is ignored by the switch. The RECALL button on a single-appearance terminal generates a timed flash of the correct time interval.

Hard and Soft Processor Swaps

If a call is being held on a voice terminal when a hard processor swap occurs, the held call does not endure the hard swap.

During a hard processor swap, calls cannot be placed on hold.

The Hold feature operates normally during a soft processor swap.

INTERACTIONS WITH OTHER FEATURES

The following System 85 features affect or are affected by the operation of this feature.

ACD (Automatic Call Distribution)

If an ACD agent (including Message Center agents) with queue-status display places an ACD call on hold, then the queue-status display is automatically updated as the agent returns to the held call for subsequent handling.

When multiple call handling is assigned to an ACD split, ACD agents equipped with a multiappearance voice terminals can place ACD calls on hold and remain available for additional ACD calls. (This operation is appropriate for Message Center agents.)

Attendant Call Waiting

Attendant Call Waiting is denied when the called single-appearance voice terminal has a call on hold.

Automatic Callback

The Hold feature interacts with the Automatic Callback feature as follows:

- A voice terminal user can hold a call while Automatic Callback is in effect toward the terminal.
- If the calling single-appearance terminal user has activated Automatic Callback and has a party on hold, the held call takes priority (rings back the calling voice terminal) when the calling terminal user hangs up. When there are no calls in hold and both terminals become idle, the automatic callback sequence takes place.

  For calling multiappearance voice terminals with a call on hold, the callback routes to an idle appearance (if available).

Bridged Call

While a straight line set has a call on soft hold (by pressing the RECALL button, or momentarily pressing the switchhook) bridging is not allowed for a multiappearance terminal sharing the appearance.

While a straight line set has a call on hard hold (by dialing the Hold dial access code), bridging is allowed for a multiappearance voice terminal sharing the appearance. The bridging multiappearance voice terminal is added to the active connection. However, the held call cannot be retrieved until the bridged multiappearance terminal leaves the connection.

Busy Verification of Lines

If terminal A has terminal B on hold, terminal A can be busy verified but terminal B cannot (unless the extension being verified has multiple appearances).

Call Coverage

If a covering user places a Coverage call on hold and the principal then bridges onto the held call, the covering user who originally placed the call on hold drops off and cannot reenter the connection.

Call Forwarding—Busy and Don't Answer

Hard hold ringbacks for single-appearance voice terminals are not forwarded. Instead, the held call rings back the terminal that placed the call on hold when the user goes on-hook.

Call Forwarding—Don't Answer

Hard hold ringbacks for single-appearance voice terminals are not forwarded. Instead, the held call rings back the terminal that placed the call on hold when the user goes on-hook.

Call Forwarding—Follow Me

Hard hold ringbacks for single-appearance voice terminals are not forwarded. Instead, the held call rings back the terminal that placed the call on hold when the user goes on-hook.

Call Pickup

A single-appearance voice terminal user is denied use of the Call Pickup feature while holding a call on hard hold and soft hold at the same time.

A voice terminal user is allowed to place a call on hard hold, and then answer a call using Call Pickup. If this is done using soft hold, the held call is moved to hard hold and can be retrieved using the access code.

Call Waiting

A voice terminal with a call on hold and a call in waiting goes on-hook. The waiting call is connected first. Using the Call Hold access code is the recommended method for returning to a held call.

The switch denies Call Waiting toward a voice terminal that has been placed on hold.

Conference—Attendant Six Party

An attendant can establish a multiparty conference connection of up to six conferees in addition to the attendant. Voice terminals which are participating in an attendant conference connection are denied access to the Hold feature.

Conference—Three Party

Used in conjunction with hard hold, this feature allows the calling voice terminal user to transfer a second call while holding the first call. After transferring the second call, the calling voice terminal user flashes the switchhook and dials the Call Hold access code to return to the call in hold.

Intercom—Automatic, Intercom—Dial, and Intercom—Manual

The Hold feature is denied on an intercom line.

Last Number Dialed

The LND (Last Number Dialed) feature operates while a call is on ‘‘hard hold’’ or ‘‘soft hold.’’ The number of the last call (the call placed after the previous call was put on hold) is stored in LND memory.

Multiappearance Preselection and Preference

The Hold feature interacts with the Multiappearance Preselection and Preference feature as follows:

- If the HOLD button on the terminal is pressed while the terminal is on-hook, any appearance preference for call origination (i.e., Last Appearance Preference, Prime Appearance Preference, or Manual Preselection) is lost. When going off-hook, the user does not connect to any appearance in these cases. Idle Appearance Preference will select a line when going off-hook.
- If any appearance is placed on hold and the controlling terminal user goes on-hook, the I-use lamp is relit on the Prime Appearance button if that terminal has Prime Appearance Preference. If the controlling terminal user then goes off-hook, the terminal connects back to the Prime Appearance and that call releases from hold.
- If the HOLD button is pressed while the terminal is in the on-hook ringing state and the Ringing Appearance preference is active, the Ringing Appearance Preference feature becomes inoperative. When the user goes off-hook, no appearance is selected or an idle line is selected if the voice terminal has Idle Appearance preference.

Music-on-Hold Access

If a 3-party conference call is placed on hold, the two remaining parties can continue with the call and are not provided music even if Music-on-Hold Access is active. A single party on hold is provided with music.

Override

The Hold feature interacts with the Override feature as follows:

- Override is allowed toward a voice terminal that has a call on hold.
- Override of a voice terminal's appearance that is on hold is denied. Busy tone is heard.

Personal Central Office Line

Personal Central Office Line calls can be placed on hold.

Priority Calling

Priority Calling is denied when either soft hold or hard hold is active at a called single-appearance voice terminal.

Privacy—Manual Exclusion

An appearance that is placed on hold while Manual Exclusion is active remains in Manual Exclusion.

Queuing

A voice terminal user can be placed in a ringback queue while holding another call. Queuing allows a voice terminal user to dial a busy outgoing trunk group, be automatically placed in a queue and called back when a trunk is available. If queuing is activated and the calling voice terminal has a call on hold, going on-hook returns the held call first (Hold takes precedence over queuing callback). After the calling voice terminal user goes on-hook and the dialed trunk group is idle, the calling voice terminal is rung back.

Restriction—Voice Terminal Restrictions

The user of an origination restricted single-appearance voice terminal can place a calling party on hold. From this state, the restricted voice terminal can be used to originate a call, activate a feature, or return to the held call.

When the origination-restricted user places a call on hold, the voice terminal is treated as a *fully unrestricted terminal* unless another restriction (e.g., Outward Restriction or Terminal-to-Terminal Only Calling) has also been applied to the terminal. If another restriction does apply, the origination restricted user's dialing capabilities are limited to the capabilities allowed by the second restriction.

Trunk Verification—Attendant and Voice Terminal

If the trunk to be verified is being held by the Hold feature, Trunk Verification is denied.

Uniform Call Distribution

Going on-hook to return to a held call may result in the voice terminal being connected to the next call in the distribution-group queue. Using the Call Hold access code is the recommended method for returning to a held call.

RESTRICTING FEATURE USE

A voice terminal user cannot be restricted from using the Hold feature when the feature is assigned in the applicable line class of service.

There is no limit to the number of voice terminals which can be assigned to this feature.

HARDWARE REQUIREMENTS

None.

FEATURE ADMINISTRATION

Assignment of the Hold feature is on the line class-of-service and then on a per-line basis. The customer can administer this feature using the SMT (System Management Terminal). This feature can also be administered using CSM (Centralized System Management).

The following are the applicable MAAP and SMT procedures.

MAAP AND SMT PROCEDURES — HOLD			
PROCEDURE	**WORD**	**PURPOSE**	**SMT**
000	1	Assigns the class of service to an extension number.	Yes
010	1	Assigns the Hold feature to a voice terminal class of service.	Yes
051	1	Assigns a voice terminal and related translations including the HOLD button.	Yes
054	3	Displays the button type of the fixed HOLD buttons.	Yes
350	1	Assigns the first digit of the dial access code (if required).	No
350	2	Assigns the access code to access hard hold using a single-appearance voice terminal. The applicable encode is: 4 Call Hold.	No

The following are the applicable CSM Command Paths utilizing the **admin** area of TCM or FM.

CSM SCREENS — MASKS HOLD		
APPL'N	**OBJECT**	**PURPOSE**
TCM	extension	Administers the class of service to an extension number.
TCM	class-of-service	Administers the Hold feature to a voice terminal class of service.
TCM	This object will be set type: i.e., 36-button, 12-button, bct, vds, feature-module, coverage-module, or data-module.	Administers a voice terminal to a set and adds related translations including the HOLD button. This command also displays the button type of the fixed HOLD buttons.
TCM/FM	first-digit	Administers the first digit of the dial access code (if required).
TCM/FM	dial-access-code	Administers the access code to access hard hold using a single-appearance voice terminal.

HOST COMPUTER ACCESS

DESCRIPTION

The Host Computer Access feature provides switched digital access between data endpoints with DCP (Digital Communications Protocol) interface to System 85 and a host computer. Host computers are connected to a GPP (General Purpose Port) on the switch through a data module or directly to an EIA port circuit. The data module or EIA port converts the EIA RS-232C signals from the host computer to the DCP format of the System 85 and vice versa. Both formats are digital, but the communications and signaling channels differ. System 85 terminals can also interface to data modules. Another digital host access arrangement is provided by the DMI (Digital Multiplexed Interface) feature. That feature is described separately in this reference manual.

Feature Access

Host Computer Access ports are accessible by either on- or off-premises facilities. For off-premises facilities, the Extension Number Steering feature must be used; and unless connections are via DS1 AVD trunks, the Modem Pooling feature must also be provided. An on-premises analog voice terminal must appear as a Remote Access extension or an Off-Premises Terminal in order to use Modem Pooling. Figure 56-1 shows a Host Computer Access configuration.

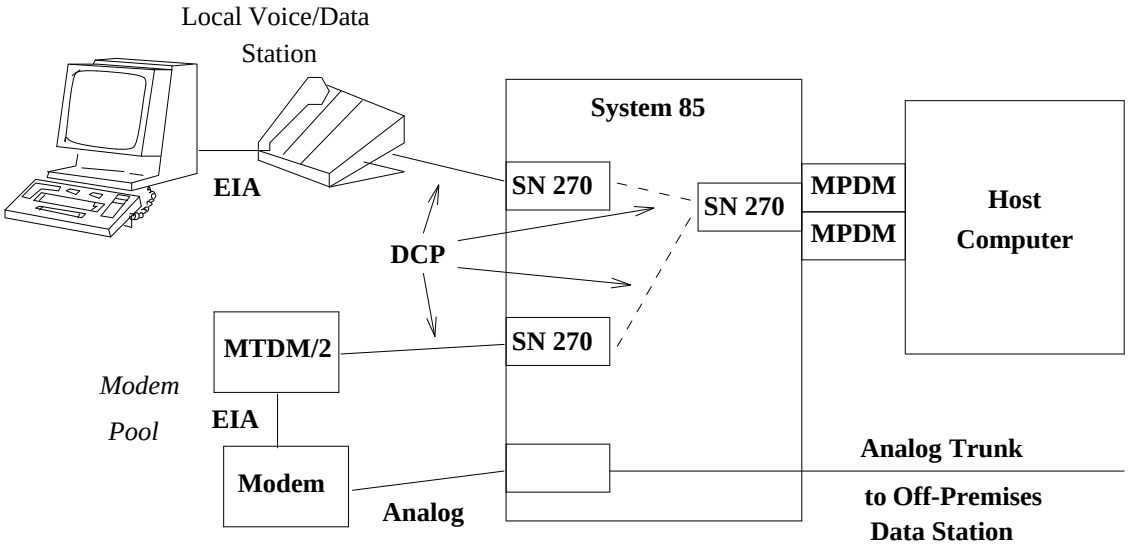

Figure 56-1. Host Computer Access Feature

Figure 56-2 shows a reduced cost configuration for the Host Computer Access feature. This configuration uses SN238 EIA circuit boards and MADUs (Multiple Asynchronous Data Units). With this reduced cost arrangement, two SN238s and one MADU provide an 8-port interface. The same eight ports in the conventional configuration would require two SN270 circuit packs and eight MPDMs.

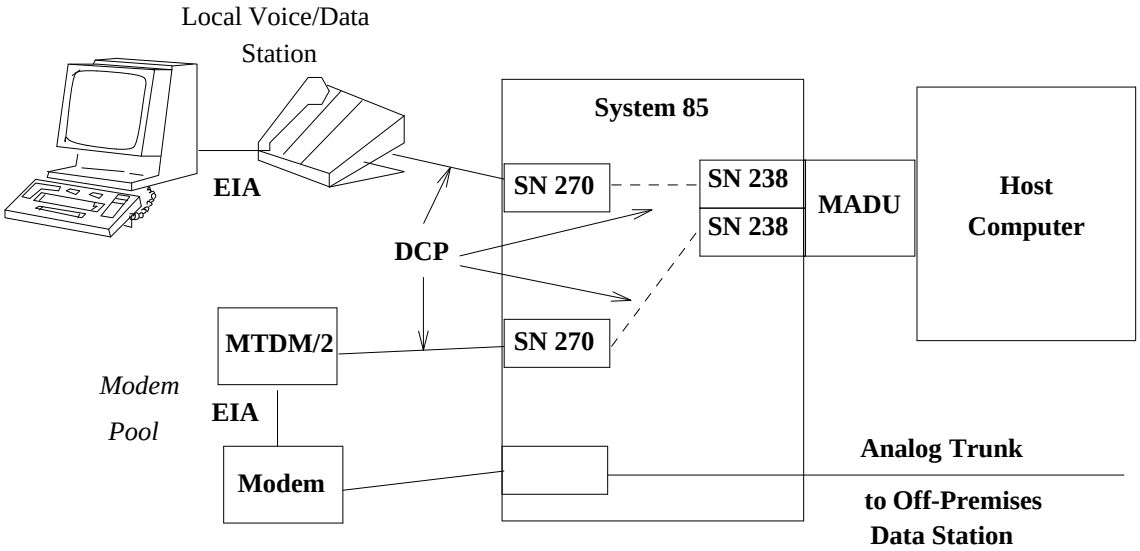

Figure 56-2. Host Computer Access, Reduced Cost Option

Arranging the Host Computer Access ports into a trunk group allows several other System 85 features to be assigned to the ports to enhance user access (see Considerations).

Host Computer Automatic Dialing

Host computer automatic dialing permits the host computer to place calls through the switch without the use of an ACU (Automatic Calling Unit). Host software routines can send data terminal dialing signals (ASCII characters in a 10-bit, start/stop format) to the data module. The data module converts outgoing signals to the DCP format and sends them to the switch as though a data terminal were being used. It also converts call progress messages from the switch to RS-232C format and returns them to the host. The host routines must be capable of interpreting and responding to these call progress messages. Such routines allow the host to emulate a data terminal to place either on-premises or off-premises calls, thus eliminating the need for ACUs.

Feature History and Development

This feature was first available on System 85 in Release 1. There have been no changes to this feature since its introduction.

USER OPERATIONS

The Host Computer Access feature is operated by the System 85 switch. There are no user operations, as such, for this feature. The Data Call Setup feature is used to access this feature and the user operations for that feature apply.

CONSIDERATIONS

Attendant Handling

The attendant cannot access the Host Computer Access feature directly. To extend an attendant seeking call to Host Computer Access, it must first be extended to a voice terminal capable of performing the necessary transfer functions. The voice terminal user can then transfer the call to the host computer.

Data Modules

Either the MPDM, MTDM, or EIA port can be used to interface host computers with the System 85. However, computer ports that are used for off-premises calls should not use an MTDM. Off-premises data calls that use analog trunks or DS1 voice-grade service only trunks require a Modem Pooling conversion resource. Modem Pooling conversion resources employ MTDMs. An MTDM cannot handshake with another MTDM; therefore, any port that is interfaced with an MTDM cannot use or be accessed through the Modem Pooling feature.

Port (Trunk) Group Limits

Host Computer Access ports, translated on the switch as trunks, are limited to a maximum of 99 ports (trunks) in a trunk group. This limitation remains in force for host computer access trunk groups, even on switches that have a basic trunk group limit of 255 trunks.

The System 85, Release 2, is limited to 255 trunk groups in Version 3 and earlier switches and 999 trunk groups for Version 4, and later switches. It is also limited to a total of 2250 physical trunks in Version 1, 5000 trunks in Version 2, and 6000 trunks in Version 3 and later systems. These facilities (both trunks and trunk groups) must be shared by all the features using trunk appearances (see Appendix A for applicable features and limits).

INTERACTIONS WITH OTHER FEATURES

The following System 85 features affect or are affected by the operation of this feature.

CDRR (Call Detail Recording and Reporting) and CMDR (Centralized Message Detail Recording)

See the SMDR interaction.

Data Protection

Data Protection—Permanent should be assigned to all Host Computer Access trunk groups to prevent system generated tones from interrupting data communications. These tones are issued in response to the activation of certain features such as Override and Priority Calling. These features are not to be used toward data extensions, but Data Protection prevents inadvertent interruptions.

Hunting

The Hunting feature is used to check if an alternate circuit in a Hunt Group can serve a call when the circuit dialed is busy. This feature can be used if port circuits are administered as lines. The Hunting principle is also used for trunks that are assigned to the same trunk group. This hunting service is automatically provided for trunk circuits in the same trunk group. When dialing a Host Computer Access trunk group, access is provided to as many as 99 computer ports. Trunk groups can also be combined using Route Advance to provide additional access.

ISN (Information Systems Network) Interface

The Host Computer Access feature is available to ISN stations through the ISN Interface feature.

Last Number Dialed

The Last Number Dialed feature completely stores and redials HCA calls to a host computer.

Queuing

The Queuing feature provides a waiting list when all resources are busy. As resources become available, the first user in queue is served. Queuing can be used with Host Computer Access. Voice terminal users can be provided with on-hook or off-hook queuing. Data terminal users can be provided off-hook queuing. If every Host Computer Access port is busy, users dialing the Host Computer Access access code receive confirmation tone (on-hook queuing), music-on-hold, a recorded announcement, or silence (off-hook queuing). If reorder tone is received, it may be an indication that the queue is full. It might also mean the system is in heavy use. The user should go on-hook and try again.

Route Advance

The Route Advance feature provides access to up to five trunk groups using a single access code. When every circuit in the first trunk group is busy, the system checks the next trunk group, and so on. Since data trunk groups can contain up to 99 trunks, this feature can provide access to as many as 495 computer ports with a single access code.

SMDR (Station Message Detail Recording)

The SMDR feature provides information on and specific identification of data calls, including Host Computer Access calls. This enables managers to allocate resources to meet dynamic needs based on use. This also applies to the CMDR and CMDR features where available.

Tenant Services

Host Computer Access (DCP access to a host computer) is a partitioned feature on System 85.

Line-side computer access is partitioned using partitioned extension numbers. Each extension number is assigned to a data module and is usually included in a hunt group. In turn, the data module's extension number is assigned to an extension partition allowing data-terminal access for users in that partition and Extension Partition 0.

Trunk-side computer access is partitioned using partitioned trunk groups. Since the trunk types (103 and 104) can be partitioned, access to these trunk groups can be dedicated to or shared by an extension partition. However, if a computer is accessed from outside the switch, *trunk-side* partitioning would have no effect. There are no partitioning checks between the incoming trunk group and the outgoing HCA trunk group.

RESTRICTING FEATURE USE

Attendant Control of Trunk Group Access

Calls to Host Computer Access ports can be restricted by applying Attendant Control of Trunk Group Access to the Host Computer Access trunk groups. Any attempt to access a Host Computer Access port is redirected to an attendant. If the attendant is to screen these calls, a voice terminal equipped with transfer capabilities must be provided near the attendant console to perform the transfer. Data call transfers cannot be performed from the attendant console because of the DCP interface at the Host Computer Access port. Modem Pooling is not provided for attendant-extended calls.

Attendant Control of Voice Terminals

An attendant can restrict selected terminals from access to the Host Computer Access trunk groups with the Attendant Control of Voice Terminals feature. An attempt to access a Host Computer Access port from a restricted terminal is redirected to an attendant. If the attendant is to screen these calls, a voice terminal equipped with transfer capabilities must be provided near the attendant console to perform the transfer. The transfer cannot be performed from the attendant console.

Facilities Restriction Levels

Facilities Restriction Levels (FRLs) provide a hierarchy of access to System 85 trunk groups. Each Host Computer Access trunk group is assigned an FRL to restrict certain users from access to the host computer. An attendant or the system manager (user of Applications Processor System Management applications) can invoke an alternate set of FRLs when desired.

Miscellaneous Trunk Restrictions

Local voice terminal lines may be restricted from accessing a Host Computer Access trunk by the Miscellaneous Trunk Restriction feature.

Trunk Group Restrictions

Access to Host Computer Access ports via a trunk dial access code can be restricted by activating ‘‘dial access denied’’ for the trunk group. This makes Host Computer Access possible only via the Extension Number Steering feature which uses indirect access to the Host Computer Access ports via a previously unused extension number.

HARDWARE REQUIREMENTS

The following specific hardware items are required for the Host Computer Access feature.

Standard Configuration

- SN270, GPP (General Purpose Port) Circuit Pack

  One SN270 circuit pack provides four DCP circuits.

- MPDM (Modular Processor Data Module)

  A data module is used to interface the host computer to the GPP. While either an MPDM or MTDM can be used for the data module, ports interfaced with an MTDM cannot connect to other data endpoints interfaced with an MTDM. This includes the Modem Pooling feature and other Host Computer ports (multiple processor applications) using MTDMs.

Reduced Cost Configuration

- SN238, EIA Trunk Circuit Board

  One SN238 circuit board provides four DCP circuit. The SN238 converts the DCP signals to the protocol used by the MADU (Multiple Asynchronous Data Unit).

- MADU (Multiple Asynchronous Data Unit)

  One MADU provides eight interface circuits (connects to two SN238 EIA circuit board).

FEATURE ADMINISTRATION

Assignment of the Host Computer Access feature is on a system basis. The customer can partially administer this feature using SMT (System Management Terminal), TCM (Terminal Change Management) feature, or FM (Facilities Management) feature. This feature can also be administered using CSM (Centralized System Management).

The following are the applicable MAAP and SMT procedures.

MAAP AND SMT PROCEDURES — HOST COMPUTER ACCESS			
PROCEDURE	**WORD**	**PURPOSE**	**SMT**
051	1	Assigns an ADFTC to an equipment location for data trunk testing.	Yes
100	1-4	Assigns trunk type including Host Computer Access and Access Code, Route Advance, and dial access restriction. **NOTE**: Applicable Words vary with different versions.	No
101	1	Assigns trunk group characteristics.	No
102	—	Assigns miscellaneous trunk restrictions.	Yes
150	—	Assigns trunk circuits to trunk groups.	No
350	1 & 2	Assigns feature dial access codes (as required).	No

The following is the applicable TCM path name used with the AP 16.

TCM SCREEN — HOST COMPUTER ACCESS	
PATH NAME	**PURPOSE**
terminal-change group trunk-restrictions	Assigns miscellaneous trunk restrictions.

The following are the applicable FM path names used with the AP 16.

FM SCREENS — HOST COMPUTER ACCESS	
PATH NAME	**PURPOSE**
facilities-mgmt data-switching host-access	Assigns an equipment location (SN270 circuit) to a Host Computer Access trunk group.
facilities-mgmt data-switching trunk-attributes	Assigns the attributes for a Host Computer Access trunk group. These attributes are: - The dial access code and trunk group number - The extension number and equipment location - A route advance list - The transmission characteristics - The trunk type - Turn the Data Restriction feature on or off.
facilities-mgmt facility-restriction trunk-groups	Assigns FRLs to trunk groups.
facilities-mgmt facility-restriction alternate-set	Assigns the alternate set of FRLs, and activate/deactivate them when desired. The attendant can also activate/deactivate the alternate-FRLs.
facilities-mgmt trunk-group queuing	Assigns Queuing to trunk groups.

The following are the applicable CSM Command Paths utilizing the **admin** area of TCM or FM.

CSM SCREENS — MASKS HOST COMPUTER ACCESS		
APPL'N	**OBJECT**	**PURPOSE**
TCM	data-module	Assigns an ADFTC to an equipment location for data trunk testing.
FM	trk-grp	Administers the trunk type and defines its features, which include: Host Computer Access and Access Code, Route Advance, and dial access restriction. This command also administers trunk group characteristics and assigns trunk circuits to trunk groups.
FM	misc-trk-rst-grp	Associates trunk groups to MTRGs (Miscellaneous Trunk Restriction Groups).
TCM/FM	first-digit	Administers the first dialed digit in the dialing plan.
TCM/FM	dial-access-code	Assigns the feature dial access code (as required).

HOST COMPUTER FEATURE

This section is reserved

for a new data-feature description

to be provided

in a forthcoming addendum.

HOT LINE

DESCRIPTION

The Hot Line feature provides automatic dialing of a predesignated number by going off-hook. Either single-line analog voice terminals or data modules administered for default dialing can be assigned as Hot Line stations.

Hot Line Voice Service

An analog voice terminal is used for Hot Line voice service. The voice terminal is assigned a personal abbreviated dialing list (see the Abbreviated Dialing feature). When administered as a Hot Line station, the first entry in the ‘‘A’’ list is dialed automatically when the terminal goes off-hook. The Hot Line number can have up to 20 digits. This provides Hot-Line service to either on- or off-premises destinations. Any other entries in the list are ignored with this arrangement, and it is not generally possible to activate other calling features and services from a Hot Line station. Unless separately restricted, Hot Line stations can receive incoming calls normally.

Hot Line Data Call Service

The Hot Line feature can be used for data calling as well as for voice service. In System 85, Release 2, Version 3, Hot-Line service was limited to analog service only. For Release 2, Version 4, either analog or digital data stations can be used with the Hot Line feature.

Analog Data Call Hot Line Stations

For analog data call setup, the Hot Line feature works the same as for an Analog Voice Hot Line station. A personal abbreviated dialing list is assigned to the analog voice terminal associated with a modem. The first number in the ‘‘A’’ list is automatically dialed when the voice terminal goes off-hook. When ready tone is returned, call control is transferred to the modem in the normal manner (see the Data Call Setup feature, analog data calls).

The voice extension can be used to answer incoming calls. This allows the voice terminal to receive data calls from data end points other than the one assigned as the Hot Line destination. The voice terminal is restricted to one data endpoint for call placement only.

Digital Data Call Hot Line Stations

A data module, providing a DCP (Digital Communications Protocol) interface, and administered for default dialing, can be assigned as a Hot Line station. The *default dialing* capability of the Data Call Setup feature is used for digital Hot Line call setup. A data module with default dialing administered becomes a digital data Hot Line station through administration (Procedure 000, Word 3). Once assigned, the user simply presses the BREAK key on the keyboard or the Originate/Disconnect button on the data module, and the default number is automatically dialed by the switch.

If a DATA button is assigned anywhere in the system for a digital data Hot Line station, the DATA button can be used to bypass Hot-Line service for the data terminal. With a DATA button, the One Button Transfer or Voice Terminal Dialing functions of the Data Call Setup feature can be used to receive incoming data calls for the data Hot Line station or to initiate data calls for the Hot Line data terminal to a data end point other than the Hot Line destination.

Hot Line Service Applications

There are many potential applications for Hot-Line service. The following are some of the more typical applications in current use.

Manual Line to Attendant

A Manual Line connects the user directly to the attendant when going off-hook. Hotels and airports use this arrangement for voice terminals located in the lobby or passenger terminal. A Manual Line can be set up in System 85 by administering a Hot Line with the attendant access code as the Hot Line destination code. The attendant can be local or a CAS (Centralized Attendant Service) attendant as best suits the application.

Paging Service

The Hot Line destination code can also be the paging access code. When the *paging Hot Line terminal* is taken off-hook, the user is automatically connected with the paging service trunk.

Emergency Services

Hot-Line service is frequently used to provide automatic connections to emergency services such as security services, fire reporting, and medical facilities.

Dedicated Use Data Terminals

Hot Line data call stations can be set up to ensure that a particular data terminal is always used to access a specific application point in a data system. This use can apply to reservation services and automatic ordering stations.

Hot Line Service Versus Dedicated Switch Connections

The Dedicated Switch Connections feature can be used for many applications where Hot Line Service would be used. The merits of the Hot Line feature versus the Dedicated Switch Connections feature must be determined on an individual case basis.

- The Dedicated Switch Connections feature ensures that a connection will always be available. In cases where emergency response is required or where immediate (real time) recording is needed, this may be an advantage. No time is lost in call setup and processing, and there is no possibility that the distant terminal might be busy on another call or that the switch might be blocked (overloaded).
- The Dedicated Switch Connections feature ties up a time slot on the switch and the terminals at both ends of the connection, even when not in use. For many low density requirements, this is wasteful of valuable resources.
- The Dedicated Switch Connections feature is not generally available for DCP (Digital Communications Protocol) interfaced data terminals.
- The Hot Line feature can be used for either analog or DCP interfaced data terminals. If DCP is used for all other applications, this could avoid the introduction of different, and generally incompatible data interfaces for limited use applications.

- The Hot Line feature consumes a time slot only when it is actually in use. This reduces the likelihood of blockage on high usage switches.
- The Hot Line feature also makes it possible to use the terminals at each end of a Hot Line path for other purposes. That is, unless otherwise restricted, a Hot Line terminal can receive incoming calls from stations other the Hot Line destination station.
- The Hot Line feature can also be used to direct calls to a multiple resource answering service such as an ACD (Automatic Call Distribution) split or attendant pool. This allows more than one call to be handled at a time when many Hot Line calls are being placed at once.

Feature History and Development

The Hot Line feature was first available on System 85 in Release 2, Version 3. In its initial form, it was available only with analog terminals.

- In System 85, Release 2, Version 4, the Hot Line feature was enhanced to make it available for DCP Data Call Setup from data modules.

USER OPERATIONS

The following are the user operating procedures for this feature.

Placing a Hot Line Call From an Analog Voice Station:

- Go off-hook on a designated Hot Line voice terminal. [Call-progress tones are returned.]

Placing a Hot Line Call From an Analog Data Station:

- Go off-hook on a designated Hot Line Modem Voice Terminal. [Call-progress tones are returned. Ready tone is heard when the destination modem answers.]
- Press the DATA button on the modem. [Call control is passed to the modem; ready tone is silenced.]

Placing a Hot Line Call From a Digital Data Station:

- Press the Originate/Disconnect button on the data module, or the BREAK key on the data terminal keyboard. [If Keyboard Dialing is assigned, call-progress messages are displayed on the data terminal screen.]

  DIAL: HOT LINE
  RINGING
  ANSWERED

- When the call setup is complete, the appropriate login sequence or other initiation process is used.

  NOTE: Key designations may vary depending on terminal model being used.

CONSIDERATIONS

Access to Other Features

The Hot Line extension cannot use most of System 85's voice terminal features since it immediately dials the Abbreviated Dialing list entry when going off-hook. For example, once the call has been dialed, flashing the switchhook is ignored (e.g., to attempt a transfer). The destination code will be redialed.

System Limit

There can as many as 52,223 Hot Line numbers administered in an R2 V4 switch (13,055 in R2 V3) if no nonsystem abbreviated dialing lists are used for the Abbreviated Dialing feature. This number is reduced by the number of personal and group abbreviated dialing lists assigned for purposes other than Hot Line. For digital data Hot Lines, the number is affected by the number of default dialing terminals in use.

Straight Line Sets

The Hot Line feature cannot be assigned to straight line sets. Hot Line terminals must be fully administered in Procedure 000, not in Procedure 051. As a result, Hot Line terminals cannot be bridged to multiappearance terminals.

Hard and Soft Processor Swaps

Stable Hot Line calls will endure a hard processor swap. However, Hot Line calls cannot be placed during a hard swap.

Hot Line destinations are stored in a translation portion of switch memory. Therefore, these destinations will endure a hard processor swap.

The Hot Line feature operates normally during a soft processor swap.

INTERACTIONS WITH OTHER FEATURES

The following System 85 features affect or are affected by the operation of this feature.

Abbreviated Dialing

The Hot Line feature uses the Abbreviated Dialing feature to perform the dialing function for voice Hot Line stations and for analog data hot line stations. Abbreviated Dialing must be provided to Hot Line stations.

Data Call Setup

Default Dialing

The default dialing capability of the Data Call Setup feature is used to perform the dialing function for digital data Hot Line stations. Data modules used for Hot Line stations must be assigned default dialing.

The default dialing number assigned to the data module becomes the hot line destination number when the data module is administered as a hot line station.

If a DATA button is assigned for a digital data Hot Line station, the DATA button can be used to bypass the Hot Line designation. This is done by setting up a data call with the voice terminal and then using 1-button transfer to connect the data terminal to the call.

One-Button Transfer

The 1-button transfer function of the Data Call Setup feature can be used to override the Hot Line assignment for a Hot Line data station and complete a call to a destination other than the Hot Line destination for that station.

Host Computer Access

The Host Computer Access feature is 1-way compatible with digital data Hot-Line service. That is, a Host Computer Access port can be the Hot Line destination for a digital data Hot Line station, but a Host Computer Access port cannot be a Hot Line station. Host Computer Access ports are administered as trunk appearances, and Hot Line stations must be administered as line appearances. A computer port administered as a line appearance (not using the Host Computer Access feature) can be a digital data Hot Line station.

IPA (Interpartition Access)

Hot Line numbers are not checked for legality at the time they are entered. Illegal Hot Line numbers are denied when the digits are outpulsed by the switch. When a user attempts to place a Hot Line call over another partition's trunk group or to an extension in another partition group, the switch returns intercept treatment to the calling party.

Tenant Services

Hot Line numbers are not checked for legality at the time they are entered. Hot Line calls are denied if they attempt to access facilities that are not allowed from the calling extension (i.e., if the Hot Line destination number would place a call over another partition's trunk group or to an extension in another partition). The switch returns intercept treatment to the calling party.

RESTRICTING FEATURE USE

The use of a voice extension as a Hot Line can be temporarily denied by either blanking the first entry in the abbreviated dialing list or removing the list entirely. The user then receives dial tone or intercept tone, respectively, when going off-hook.

Several restriction features can be applied to the extension to limit or restrict the user from placing a particular Hot Line call.

- Voice Terminal Restrictions can be used to limit the call placing and call receiving capabilities of any System 85 terminal including a Hot Line station.
- Attendant Control of Voice Terminals can be used to limit the call placing capabilities of individual terminals or groups of terminals, including Hot Line stations, on a temporary basis.
- Attendant Control of Trunk Group Access restricts calls, including Hot Line calls from being place directly over the restricted trunk groups. Attendant assistance is required for the use of these trunk groups.

If a Hot Line Station is to be reserved for Hot Line use only, it should be inward or termination restricted to prevent it from being used to receive incoming calls.

For Digital Data Hot Line Stations that are to be restricted to Hot Line Service use, do not assign a DATA button for the data module used. The 1-button transfer capability provided by the DATA button can override the default dialing function that is used for digital data call Hot-Line service.

See the Data Call Setup feature for more detailed information on voice terminal data call setup, default dialing, and 1-button transfer.

HARDWARE REQUIREMENTS

No new special hardware is required for this feature.

FEATURE ADMINISTRATION

Assignment of the Hot Line feature is on a per station basis using the MAAP (Maintenance and Administration Panel). The customer can also administer this feature using the SMT (System Management Terminal) or TCM (Terminal Change Management) feature. Hot Line can also be administered using CSM (Centralized System Management).

The following are the applicable MAAP and SMT procedures.

MAAP AND SMT PROCEDURES — HOT LINE			
PROCEDURE	**WORD**	**PURPOSE**	**SMT**
000	3	Assigns Hot-Line service to a voice terminal or data module extension number.	Yes
059	1	Assigns a 5-item personal abbreviated dialing list to an extension number.	Yes
059	2	Assigns destination or access codes to personal abbreviated dialing lists. For Hot-Line service, only the first entry in list ‘‘A’’ should be assigned.	Yes
059	4	Assigns the default dialing number for a data module. This is used as the Hot Line destination number for digital data hot line stations. Not applicable prior to Release 2, Version 3.	Yes

The following are the applicable TCM path names used with the AP 16.

TCM SCREENS — HOT LINE	
PATH NAME	**PURPOSE**
terminal-change extension attributes	Assigns Hot Line to an extension number.
terminal-change group abbreviated-dialing	Assigns an extension to an abbreviated dialing list and assigns the list entries.

The following are the applicable CSM Command Paths utilizing the **admin** area of TCM or FM.

CSM SCREENS — MASKS HOT LINE		
APPL'N	**OBJECT**	**PURPOSE**
TCM	extension	Assigns Hot-Line service to a voice terminal extension number and assigns a 5-item personal abbreviated dialing list to an analog extension.
TCM	data-module	Adds, changes, displays, or removes a data module. (These include PDM, TDM, ADFTC, AP32 circuit and the EIA Interface). This command also adds the extension number associated with the data module, ADFTC or AP32 circuit, or EIA interface, and assigns a class of service, hunt-to extension number, terminal dialing capabilities, abbreviated dialing capabilities, and (if CM is present) an account ID.
TCM	abbr-list-entries	Assigns the destination or access codes to personal abbreviated dialing lists, and assigns the default number for a data module (this is used as the Hot Line destination number for digital data Hot Line stations, which is not applicable prior to R2 V3).

HUNTING

DESCRIPTION

The Hunting feature routes calls directed to a busy terminal to other terminals in a predetermined group (hunt group). The status (busy or idle) of extensions within the group is checked in order. If an extension is busy, the call routes (hunts to) to the next extension. This hunting process continues until an idle extension is found or the hunt group has been exhausted, depending on the type of hunting that is used. There are two types of hunting or search patterns that can be used, circular or linear.

- Circular Hunting

  In circular hunting, the hunt starts with the called extension and proceeds to check *all* extensions in the hunt group. The call completes to the first idle extension found. The hunt routine can check up to 30 terminals. In hunt groups with less than 30 terminals, some terminals are checked again. If every extension number in the hunting sequence is busy, the switch returns busy tone to the caller.

- Linear Hunting

  In linear hunting, the hunt starts at the called extension and proceeds to check the *remaining* extensions in the hunt group. If the called extension is not the first number in the hunt group sequence, the extensions preceding the called number in the hunt group are *not* checked. If the remaining extension numbers are busy, the switch returns busy tone to the caller.

The Hunting feature provides efficient use of voice terminals when heavy incoming calling is experienced in a particular department. This feature improves customer service by allowing as many as 30 people to respond to a call. Also, since the switch hunts for an idle terminal, the caller is less likely to receive busy tone.

Feature History and Development

The Hunting feature was first available on System 85 with Release 1. This feature has remained unchanged since its introduction.

USER OPERATIONS

The Hunting feature provides a service for calls coming into a System 85 hunt group. There are no System 85 user operating procedures, and its operations are transparent to callers.

CONSIDERATIONS

Group Size

Any number of extensions can be assigned to a hunt group. However, the hunting algorithm will not check more than 30 extension numbers.

Local Restriction

Hunting can only be done within the local switch.

Hunting Destination

A terminal can only hunt to one other terminal. However, Call Forwarding—Busy and Don't Answer can be used to route calls out of the hunt group to an attendant position.

Sequencing

A hunting group is established sequentially. This is done by assigning the next (hunt to) destination for each extension in the group.

Dual Hunting to Same Point

Hunt groups can be set up with more than one terminal hunting to the same extension. The last terminal in one or more linear hunt groups can hunt to a circular group.

Hunting to Multiappearance Voice Terminals

When the switch hunts to an extension with more than one appearance, the algorithm attempts to distribute the call to every appearance with terminating capabilities before hunting to the next extension in the group.

INTERACTIONS WITH OTHER FEATURES

The following System 85 features affect or are affected by the operation of this feature.

Attendant Call Waiting

When the called terminal is part of a hunting group, hunting is performed before the Attendant Call Waiting feature is implemented. If an idle terminal is not found in the hunt path, the call waits on the originally called terminal.

ACD (Automatic Call Distribution)

Any individual ACD agent extension can be included in a hunt group other than the ACD split. Hunting functions normally in this case. However, an ACD split's controlling extension cannot be assigned to a hunting sequence.

Automatic Callback

If Automatic Callback is used toward a busy terminal in a hunt group, hunting does not take place. The call does not complete until the specific called terminal becomes idle.

Busy Verification of Lines

Hunting is not performed when the Busy Verification of Lines feature is used toward a terminal in a hunting group.

Call Coverage

When a call routes to coverage, hunting is only done from the final position in the coverage path.

Call Vectoring

A vector directory number cannot be assigned to a Hunting sequence. When this is attempted, an administration error will occur.

A member of a hunt group can be assigned as the destination of a ‘‘route to’’ vector step. When this is done, the call terminates to an idle extension in the hunt group when the routed-to extension is busy.

CMDR (Centralized Message Detail Recording)

The number recorded on the SMDR record is the number of the hunted to terminal where the call is answered, not the number originally called.

Call Forwarding—Busy and Don’t Answer

When a call is forwarded to a busy terminal in a hunt group, hunting takes place. Another terminal in the hunt group may receive the call rather than the terminal selected in the call forwarding arrangement.

When an incoming call hunts to a terminal in a hunt group with Call Forwarding—Busy and Don’t Answer active, the call forwards as specified by the call forwarding arrangement (call forwarding takes precedence).

Call Forwarding—Don't Answer

When a call forwards to a terminal in a hunt group, another terminal in the hunt group may receive the call rather than the designated terminal (hunting occurs).

When an incoming call reaches a terminal in a hunt group with Call Forwarding—Don't Answer active, the call forwards to the designated terminal if the call is not answered. When the forwarding terminal is busy, the call will hunt.

Call Forwarding—Follow Me

When a call is forwarded to a busy terminal in a hunt group, hunting takes place. Another terminal in the hunt group may receive the call rather than the terminal selected in the call forwarding arrangement.

When a terminal in a hunt group uses Call Forwarding—Follow Me, that terminal is bypassed. No attempt is made to connect or forward the call; however, the extension record is checked to identify the next *Hunt to* extension.

If the terminal specified by Call Forwarding—Follow Me has Call Waiting active and is in a hunt group, a call forwarded to that busy terminal hunts for an idle line first and then waits on the specified terminal if no idle line is found.

Call Waiting

When a called terminal assigned Call Waiting is busy and the terminal is in a hunting group, an incoming call hunts before the Call Waiting feature is implemented. If every terminal is busy, the call waits on the originally called terminal.

EUCD (Enhanced Uniform Call Distribution)

Any individual EUCD agent extension may be included in a hunt group. Hunting functions normally in this case. However, an EUCD split's controlling extension cannot be assigned to a hunting sequence.

Extension Number Portability

An extension number must be removed from a hunting sequence, if assigned, before it can be ported to another node.

Host Computer Access

The Hunting feature can be used to check if an alternate circuit in a Hunt Group can serve a call when the dialed circuit is busy. To combine the Hunting feature with Host Computer Access, administer the port circuits as lines.

The Hunting principle is also used for trunks that are assigned to the same trunk group. This hunting service is automatically provided for trunk circuits in the same trunk group. When dialing a Host Computer Access trunk group, access is provided to as many as 99 computer ports. (Trunk groups can also be combined using Route Advance to provide additional access.)

Leave Word Calling

Leave Word Calling messages are always left for the principal originally called, even when the Hunting feature is active. The only exception to this is calls redirected to an attendant. Leave Word Calling is not allowed when a call is redirected to an attendant.

Override

An Override call does not hunt. Override calls terminate to the dialed extension.

Priority Calling

Hunting is not performed when Priority Calling is used toward a terminal in a hunting group. Priority calls either wait on a called single-appearance voice terminal or terminate to an idle appearance of a multiappearance voice terminal (if available).

Queuing

When the local switch attempts a Queuing callback, the callback call does not hunt.

Callback Calling

If a Callback Call is made over a tandem tie trunk, the call appears as a normal incoming tie trunk call to the subtending switch. If the called terminal is in a hunt group and is busy when a callback attempt is made, the callback call will hunt.

Restriction—Attendant Control of Voice Terminals

When a call is placed directly to a restricted voice terminal in a hunt group, the switch returns Intercept Treatment to the calling party. The call does not hunt.

However, when a call is placed to an unrestricted voice terminal in a hunt group, the call can hunt to the restricted terminal and beyond. The hunting pattern is not affected.

Restriction—Voice Terminal Restrictions

When a call is placed directly to a restricted voice terminal in a hunt group, the switch returns Intercept Treatment to the calling party. The call does not hunt.

However, when a call is placed to an unrestricted voice terminal in a hunt group, the call can hunt to the restricted terminal and beyond. The hunting pattern is not affected.

SMDR (Station Message Detail Recording)

The dialed number recorded by SMDR is the number of the hunted-to terminal that answered the call, not the originally called number.

Tenant Services

There are no tests in System 85 software to prevent hunting to another partition. It is the responsibility of the system manager to ensure that the extensions in a hunt group do not cross partition boundaries.

Timed Reminder

When the STA ID button is pressed on the attendant console, the extension number shown on the attendant display is the extension the call hunted to rather than the originally called extension.

Variable Format Call Detail Recording

The call record shows the hunted-to extension number (the extension that actually answers the call) as the called number.

HARDWARE REQUIREMENTS

None.

FEATURE ADMINISTRATION

Assignment of the Hunting feature is on a per-terminal basis. The customer can administer this feature using the SMT (System Management Terminal) or the TCM (Terminal Change Management) feature. Hunting can also be administered using CSM (Centralized System Management).

The following is the applicable MAAP and SMT procedure.

MAAP AND SMT PROCEDURE — HUNTING			
PROCEDURE	**WORD**	**PURPOSE**	**SMT**
000	2	Assigns a hunt-to extension number to each extension in a hunt group.	Yes

The following are the applicable TCM path names used with the AP 16.

TCM SCREENS — HUNTING	
PATH NAME	**PURPOSE**
terminal-change extensions hunt	Displays or prints a report of the hunting sequence for a specified extension or a set of extensions.
terminal-change extensions attributes	Assigns a hunt-to extension number to each extension in a hunt group.

The following is the applicable CSM Command Path utilizing the **admin** area of TCM or FM.

CSM SCREEN — MASK HUNTING		
APPL'N	**OBJECT**	**PURPOSE**
TCM	extension	Administers a hunt-to extension number to each extension in a hunt group.

INFORMATION SYSTEMS NETWORK INTERFACE

DESCRIPTION

The ISN (Information Systems Network)

The ISN is a packet switched LAN (Local Area Network) that connects digital processors and devices in an asynchronous distributed processing system. The distribution system and carrier medium can be all-wire or a combination of wire and optical fiber. The ISN Packet Controller is a high-speed packet switch that moves packets of information from one network component to another. A single packet controller can service as many as 1920 asynchronous data devices (ISN stations). Additional information on the ISN can be found in Introduction, Information Systems Network, 999-740-101, and Reference Manual, Network Management, 555-101-205.

The System 85 Interface to ISN

EIA Trunk Ports

System 85 interfaces to the ISN through 1-way EIA trunk ports. The ‘‘one way’’ is a trunk function (incoming calls or outgoing calls only) and not a data flow function. These ports provide full duplex, RS-232C asynchronous, 10-bit start/stop data transmission (see Figure 60-1).

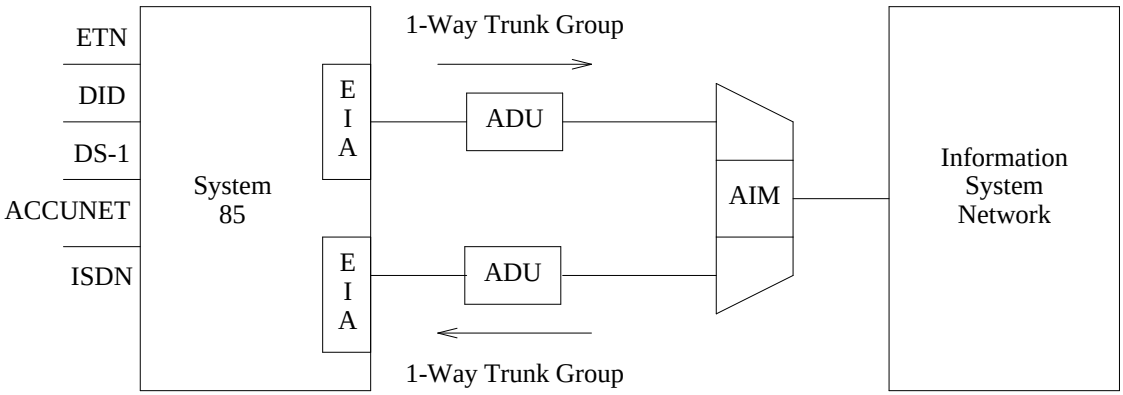

ADU - Asynchronous Data Unit

Figure 60-1. System 85 to ISN Connectivity

Z3A3 ADU (Asynchronous Data Unit)

An ADU is used in the connection between the EIA port of the System 85 and the AIM (Asynchronous Interface Module) of the ISN. The Z3A3 ADU connects to the EIA port via a cross-connect cable and serves as a signal buffer that extends the range of the EIA signal from 50 feet to between 2,000 feet and 40,000 feet depending on data rate and conductor gauge.

AIM (Asynchronous Interface Module)

These trunks connect to an AIM located in either the Packet Controller or Concentrator. The bit rate for each trunk group is fixed at a standard asynchronous data rate (300; 1,200; 2,400; 4,800; 9,600; or 19,200 bps). When accessing an ISN Interface trunk group, selection is made based on the data rate needed.

Protocol Conversion: The EIA circuit provides protocol conversion between EIA (on the ISN side) and DCP (on the switch side). To System 85, this circuit board looks and responds like a PDM (Processor Data Module).

Synergism

This interface enables the ISN and System 85 to work together to enhance each other's data communications capabilities. The System 85 provides gateway services for the ISN for connection to ETN (Electronic Tandem Network), DCS (Distributed Communications System), ISDN (Integrated Services Digital Network), and other external networks. This integration also enhances the data-switching capabilities of System 85. Services and enhancements include the following:

- Connections between System 85 and the ISN are set up using standard Data Call Setup dialing techniques.
- Access to applications on the Applications Processor is available from either System 85 or the ISN terminals.
- Access to the public and private networks is available to ISN terminals through the System 85.
- Access to ISN stations is available from external, public, and private network data stations through the System 85.
- Access to the ISN's high-speed multiplexed networking capabilities is available to System 85 data stations.
- Integrated administration is available for both ISN and System 85 from a single System Control Terminal.

Feature History and Development

The ISN Interface feature was first available with System 85 in Release 2, Version 2.

USER OPERATIONS

Access to the ISN from System 85 uses the Data Call Setup feature.

Keyboard Dialing:

- Press the BREAK key on the keyboard,

  or

- Press the ORIGINATE/DISCONNECT button on the associated data module. [Dial prompt]
- Dial the appropriate ISN Interface trunk group access code or extension number.* [Second dial prompt]
- Dial the ISN destination number.

Voice Terminal Dialing:

- Dial the desired ISN Interface trunk group access code or extension number.* [Second dial tone]
- Press the appropriate DATA button to transfer control of the call to the assigned data terminal.
- Complete dialing to the ISN destination number from the connected data terminal.

Host Computer Dialing:

It is possible to use Host Computer Dialing to access selected ISN stations including ISN Host Computers. The off-hook/on-hook signals and dialing instructions are generated from software provided by the user.

Disconnecting Voice Terminal Controlled ISN Calls:

- At the controlling voice terminal, go off-hook.
- Press the appropriate DATA button. (The ISN call is transferred back to the voice extension.)
- Go on-hook. (The ISN Interface trunk seizure is dropped.)

---

* ISN Interface trunk groups have fixed data rates. Select a trunk group with a data rate that matches your terminal.

Disconnecting ISN Interface Calls Using Keyboard Dialing:

- Press the BREAK key for 2 seconds if long-space disconnect is active,

  or

- Press the ORIGINATE/DISCONNECT button on the data module.

See the Data Call Setup feature for a more detailed description of the procedures and options available to System 85 users.

Accessing System 85 From ISN

To access the System 85 from the ISN, use 1- or 2-stage keyboard dialing. Two-stage dialing is the same as above; except that all dial prompts come from the ISN and are different from the prompts given by the System 85. The ISN controls all the address signaling. One-stage dialing is performed by entering the System 85 trunk group access code and the destination code on a single input line.

CONSIDERATIONS

Common Terminal Administration

A 500 BCT connected to an AP-16 can be used to perform remote administration of the ISN through the ISN Interface connection. This allows the same terminal to be used to administer all three connected systems (ISN, System 85, and AP-16).

An EIA terminal, such as the 513 BCT or a 515 BCT, connected to the System 85 switch can also be used to administer the ISN. In all cases, the terminal used to administer the ISN must be operating in a ''Dumb Terminal Mode'' (TTY Emulation for the 500 and 515 BCTs). A 500 BCT connected to a 3B5 AP does not have a dumb terminal mode (TTY Emulation) and cannot be used to administer the ISN.

Switch administration, using the Terminal Change Management feature, can also be done from the same AP terminal or 515 BCT. Switch administration can also be done from an ISN terminal.

Common Printer

The ISN Interface feature allows facilities, such as printers connected to the AP, to be shared by terminals and work stations on either the ISN or the System 85 switch.

Differences in Dialing Procedures

2-Stage Dialing: Dialing from the System 85 to an ISN destination requires a separate response to each of two dial prompts: one from the System 85 switch and the other from the ISN Controller.

1-Stage Dialing: ISN users can access System 85 stations using 1-stage keyboard dialing. This is done by entering the System 85 interface access code and the destination number on a single input line.

Data Protection

Data Protection—Permanent should be assigned to all ISN Interface trunk groups to prevent system generated tones from interrupting data communications. These tones are issued in response to the activation of certain features, such as Override and Priority Calling. These features should not to be used toward data connections, but Data Protection prevents inadvertent interruptions.

Interface Trunk Characteristics

Trunks used for the ISN Interface are administered as 1-way, either in or out (as seen from the System 85 switch). These trunks are also assigned a fixed data rate. Users on the System 85 side must know what trunk groups (trunk group access codes or extension numbers) match the data rates of their terminal.

On the ISN side of the interface, flow control is available to modify data rates so that matching data rates to ISN terminals are unnecessary. It is necessary, however, for ISN users to select the appropriate trunk group to match the System 85 data end point when placing an ISN to System 85 call, unless the System 85 data end point has an autobaud capability.

INTERACTIONS WITH OTHER FEATURES

The following System 85 features affect the use of the ISN Interface feature.

AAR/ARS (Automatic Alternate Routing and Alternate Route Selection)

ISN data stations can use the System 85 features AAR and ARS when placing private or public network calls through the System 85, provided Modem Pooling is available.

Centralized Message Detail Recording

The CMDR (Centralized Message Detail Recording) feature provides information on and specific identification of data calls including ISN Interface calls.

Data Call Setup

The Data Call Setup feature is used to access the ISN Interface from the System 85 side. When keyboard dialing is used, System 85 users receive ‘‘TRY AGAIN’’ when all facilities are busy, while ISN users receive ‘‘BUSY.’’

DS1 Interface

When the DS1 Interface feature with AVD (Alternate Voice/Data) trunks or ISDN/PRI trunks are used to link System 85 locations, end-to-end digital connections between ISN stations and remote locations are possible. These arrangements do not require support from the Modem Pooling feature.

Host Computer Access

The Host Computer Access feature is available to ISN stations through the ISN Interface feature.

ISDN/PRI (Integrated Services Digital Network/Primary Rate Interface)

The ISN Interface feature and the ISDN/PRI feature are compatible. ISN stations can access ISDN/PRI facilities (and ISDN/PRI calls can access ISN stations) through the interworking function.

Modem Pooling

Modem Pooling on the System 85 provides 2-way connectivity between ISN endpoints and remote stations via either public or private network trunks. For example, a remote data station user can dial the System 85 number assigned to the ISN trunk group, receive the ISN dial prompt, and dial the ISN destination code. An ISN station user can also dial through to the remote data station. Use of Modem Pooling requires that extension number steering be available to access ISN Interface trunks.

Queuing

System 85 endpoints can use Queuing if all ISN Interface trunk circuits are busy, and the queue is not full. Voice terminal users can be provided with on-hook (if administered) or off-hook queuing. Data terminal users can use off-hook queuing only. Queuing is not provided by ISN. That is, when a call from the System 85 side has passed the ISN Interface point and is under ISN control, Queuing is no longer available. Also, Queuing is not available to ISN station users until after the call has passed the interface point.

Direct Inward Dialing

When an off-net voice terminal is used to set up a data call to the ISN Interface, stage one dialing can be performed from the voice terminal (i.e., the ISN Interface access code); however, stage two dialing must use keyboard dialing (i.e., dialing the ISN endpoint).

Route Advance

The Route Advance feature provides access to as many as five trunk groups with a single access code. When all circuits in the first trunk group are busy, the system checks the next trunk group and so on. With up to 256 trunks in a trunk group, this provides up to 1280 port appearances with a single access code.

Station Message Detail Recording

The SMDR (Station Message Detail Recording) feature provides information on and specific identification of data calls including ISN Interface calls.

Tenant Services

A partitioned System 85 can serve as an endpoint in a tenant's data network. As long as the partitioned switch is serving as an enpoint to the ISN, an extension partition within the partitioned switch can access the ISN over dedicated trunk groups. However, a partitioned System 85 should not reside between the ISN and another switch. Acting as a tandem, the partitioned System 85 does not provide trunk-to-trunk partitioning to the ISN.

RESTRICTING FEATURE USE

For System 85 users, the Data Call Setup feature is used to access ISN Interface. Therefore, the same restrictions that apply to the Data Call Setup feature also can be applied to ISN Interface.

Temporary Station Restrictions: The System 85 attendant can use the Restriction-Attendant Control of Voice Terminals feature to restrict use of this feature by System 85 stations and to limit access to System 85 stations via this feature.

Fixed Station Restrictions: Fixed restrictions that apply to terminals that could be used with the ISN Interface feature include the following:

a. Origination Restriction

b. Termination Restriction

c. Terminal-to-Terminal Only Restriction

d. Inward

e. Outward.

Trunk Restrictions: Also, because ISN Interface ports are trunk appearances on the System 85, the following trunk restrictions can be applied.

a. Attendant Control of Trunk Group Access

   CAUTION: If the attendant is to screen calls, a voice terminal equipped with transfer capabilities must be provided near the attendant console to perform the transfer. Data transfers cannot be performed from the attendant console, and Modem Pooling is not available to attendant extended calls. Also, the attendant console cannot handle Keyboard Dialing originated calls.

b. Facilities Restriction Levels

c. Miscellaneous Trunk Restrictions

d. Trunk Group Restrictions.

HARDWARE REQUIREMENTS

The following System 85 hardware items are required to implement the ISN Interface feature:

- EIA Port Circuit Board, SN238, four circuits per board
- Z3A3 ADU Interface Unit, one for each EIA trunk circuit used. This unit is sometimes referred to as a Limited Distance Modem.

On the ISN side, an AIM (Asynchronous Interface Module) optioned to present a DTE (Data Terminal Equipment) interface is required. The AIM provides eight port connections.

FEATURE ADMINISTRATION

The trunk ports that connect System 85 to the ISN are assigned on a per-trunk basis and administered via the MAAP (Maintenance and Administration Panel) or SMT (System Management Terminal). This feature can also be administered using CSM (Centralized System Management).

The following are the applicable MAAP and SMT procedures.

MAAP AND SMT PROCEDURES — ISN INTERFACE			
PROCEDURE	**WORD**	**PURPOSE**	**SMT**
070	1,2,3,4	Displays detailed information for an equipment location including: equipment type, state of health, bit rate (bps), parity, transmission mode and type, and EIA leads.	Yes
100	1	Assigns a trunk dial access code and trunk type to a trunk group. For incoming trunk groups (ISN to System 85), Field 10 (dial access restriction) should be set to 1. This prevents terminals assigned to System 85 from accessing these trunks, but permits testing via the Trunk Verification by Station feature.	No
100	2	Administers data characteristics for trunk groups assigned to ISN Interface.	No
150	—	Assigns trunks (by equipment location) to trunk groups.	No
160	1	Assigns trunks to remote carrier groups.	No
354	2	Assigns extension number steering.	No

The following is the applicable TCM path name used with the AP 16.

TCM SCREEN — ISN INTERFACE	
PATH NAME	**PURPOSE**
terminal-change terminal equipment	Assigns an equipment location to an EIA port. Also assigns an extension number to the EIA port.

The following are the applicable CSM Command Paths utilizing the **admin** area of TCM or FM.

CSM SCREENS — MASKS INFORMATION SYSTEMS NETWORK INTERFACE		
APPL'N	**OBJECT**	**PURPOSE**
FM	trk-grp	This command provides the following: Assigns a trunk dial access code and trunk type to a trunk group. (For incoming trunk groups - ISN to System 85 - dial access restriction should be activated. This prevents terminals assigned to System 85 from accessing these trunks, but permits testing via Trunk Verification by Station feature); administers data characteristics for trunk groups assigned to ISN Interface; and assigns trunks (via equipment location) to trunk groups.
TCM	dac-to-extension	Assigns extension number steering to DAC's.
FM	station-no-steering	Assigns extension number steering to RNX's.

INTEGRATED SERVICES DIGITAL NETWORK/PRIMARY RATE INTERFACE

DESCRIPTION

The ISDN/PRI (Integrated Services Digital Network/Primary Rate Interface) feature allows the System 85 to connect to both public and private networks that use the ISDN standards.

The ISDN Concept

The ISDN concept envisions a world wide standard for **integrated voice/data networks**. Figure 61-1 shows the telecommunications services that will be available from ISDNs when fully developed.

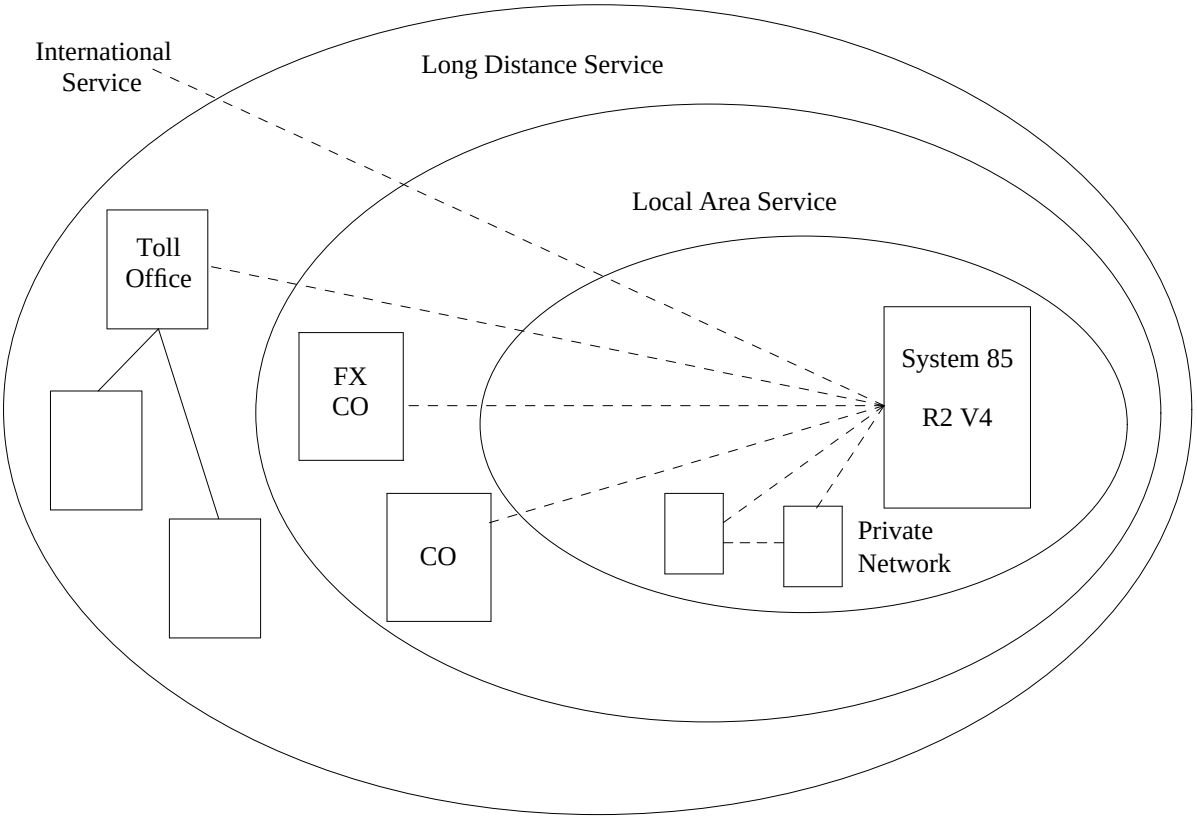

Figure 61-1. The ISDN Service Concept

International standards for ISDN are set by the CCITT (International Telegraph and Telephone Consultive Committee). The ISDN concept was first proposed to the CCITT in 1979 and has been evolving ever since. As an evolving system, the ISDN standards are not fully defined at all levels. The current standards are contained in CCITT recommendations in the I.420 series, I.430 series, Q.920 series, and the Q.930 series.

Definitions: In the early part of the I. series recommendations, the CCITT defines an ISDN as follows:

> ''An ISDN is a network, in general evolving from telephony IDN (Integrated Digital Network), that provides end-to-end digital connectivity to support a wide range of services, including voice and nonvoice services, to which users have access by a limited set of standard multipurpose user-network interfaces.''

In recommendation I.420, the CCITT says:

> ''An ISDN is recognized by the service characteristics available through user-network interfaces, rather than by its internal architecture, configuration or technology. This concept plays a key role in permitting user and network technologies and configurations to evolve separately.''

The CCITT recommendations call for two types of interface: a BRI (Basic Rate Interface) and a PRI (Primary Rate Interface). These are described in the following.

The BRI (Basic Rate Interface)

The BRI provides for a station direct (ISDN facilities end-to-end) interface. With BRI service, *each station* has its own interface that sends and receives control and signaling messages. The BRI connections available are shown in Figure 61-2.

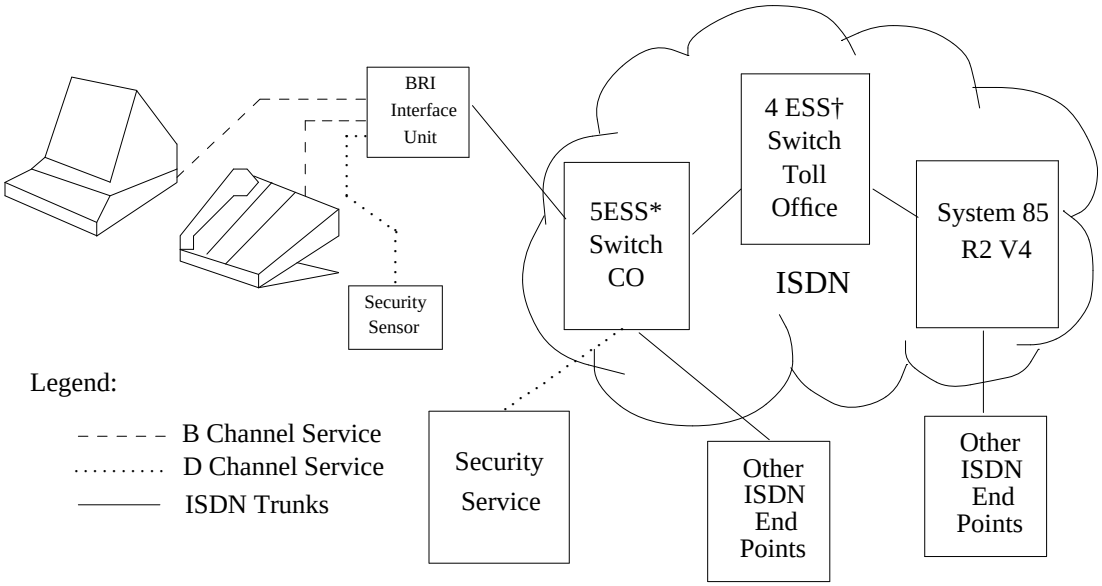

*** Trademark of AT&T.**

† Trademark of AT&T.

Figure 61-2. ISDN/BRI Arrangement

Services provided by this interface are similar to those available from the DCP (Digital Communications Protocol) used in the System 85. In addition, features and services unique to ISDN are available at the user station level. ISDN features and services are described later under **The System 85 Implementation**. Each ISDN/BRI station is served by two ''B'' (bearer) channels and one ''D'' (data) channel. In ISDN terminology, this arrangement is called a ''**2 B plus D**'' configuration.

> **NOTE:** While BRI is part of the ISDN recommendations, it is not part of the System 85 implementation in Release 2, Version 4.

The B Channels: The B channels provide 64 Kbps digital communications services. The two B channels can support two separate connections at the same time (i.e., a voice terminal and a data terminal).

The D Channel: In the BRI version, the D channel is a 16 Kbps digital link that is used for call control and signaling. On a periodic basis, the D channel can also be used for ''packet services'' with the BRI. The main function of the D channel is signaling and control for the two B channels. The capacity of a 16 Kbps D channel exceeds the signaling and control requirements to support two B channels. This excess capacity can be used for packet services. As an example, the D channel could be used as a packet bearer to send periodic signals to an energy or security service that does not need a full-time communication link. This packet bearer service is not provided with the other ISDN interface, the PRI.

The PRI (Primary Rate Interface)

The PRI provides an ISDN interface for switches. This covers network connections (for both private and public networks), switch-to-host computer connections, and host computer-to-network connections. The connections available are shown in Figure 61-3.

With PRI, individual stations work within the network provided by the local switch and do not have direct ISDN connectivity. The features and services available to each station are provided by the local switch and not by the ISDN.

The PRI (in the North American version) provides twenty-four, 64 Kbps channels. These are arranged as 23 ''B'' (bearer) channels and one ''D'' (data) channel for common control and signaling. In ISDN terminology, this is called a ''**23 B plus D**'' configuration. *Note that this is the North American version*. In Europe, channel arrangement is different. The reason that channel arrangements are different between the American and European standards is that the standard digital carriers currently being used in Europe and North America are different. The North American arrangement corresponds to the North American DS1 format with common channel signaling, while the European version corresponds to the equivalent digital carrier used in Europe.

In the North American version, the main difference between ISDN and the earlier versions of DS1 is that ISDN uses MOS (Message Oriented Signaling), while standard DS1 uses a form of BOS (Bit Oriented Signaling).

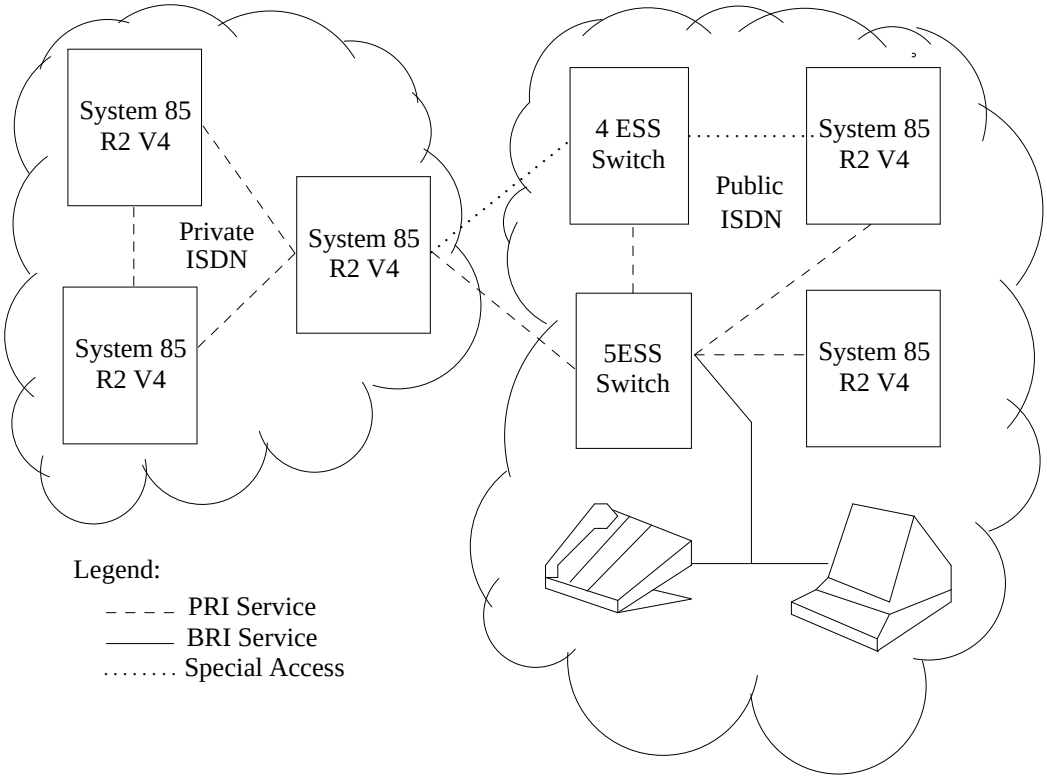

Figure 61-3. ISDN/PRI Connections

Common Elements

In either form (BRI or PRI), ISDN uses common elements. Both the BRI and PRI use digital, 64 Kbps ‘‘B’’ channels for communications. Both also use common channel (out of band), message oriented signaling. Both BRI and PRI are compatible with the same networks and with each other.

The ISDN can be used with either public or private networks. The following AT&T switches support the ISDN standards:

- 4 ESS Switch — Commonly used for Toll Offices in public networks
- 5ESS Switch — Commonly used as Central Office switches in public networks but also available for large PBX applications
- System 85 Switch — Commonly used for medium to large PBX requirements.

Background

THE ISO (INTERNATIONAL STANDARDS ORGANIZATION) MODEL

ISDN uses a layered protocol that conforms to layers 1, 2, and 3 of the ISO OSI (International Standards Organization Reference Model for Open Systems Interface) shown in Figure 61-4.

This reference model is frequently called the ISO Model. It was developed as a standard for packet switching networks and was used for the international packet switching protocol X.25. The ISO model is intended to provide a standard for public networks around the world. The intent of both the ISO OSI model and ISDN is to provide an open system digital network arrangement that is independent of any particular vendor. The term **Open System** means a system that is open or available to anyone. The standards used in such a system are public domain, and anyone who wants to can use them. In this way, any vendor is free to produce equipment or develop systems that will work with the open system. The opposite would be a **proprietary system** that can be used only by the developer or under license (with the developers permission).

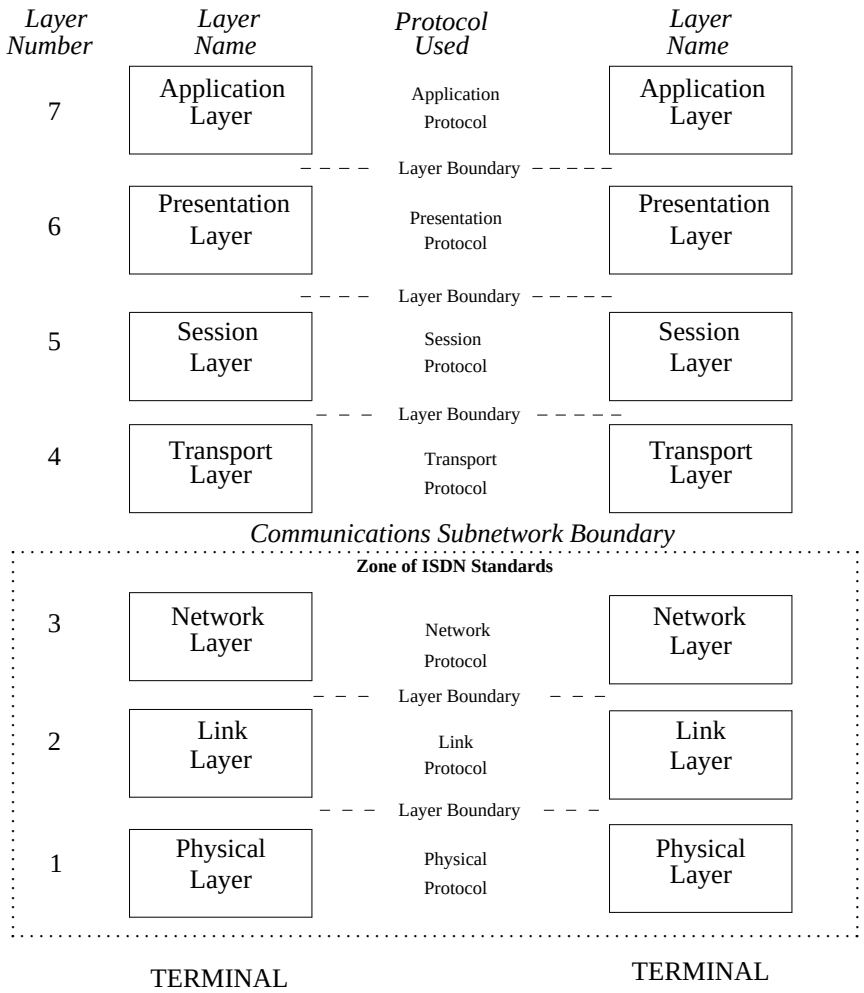

Figure 61-4. The ISO Reference Model

While some services and features (i.e., display services) are hardware related, general access to a public ISDN and its network features and services should be independent of the specific hardware used. That is, network features and services should be available to all users without regard to who manufactured their equipment.

Also, a user with equipment made by one manufacturer should be able to communicate, without difficulty or special permission, with another user whose equipment was made by a different manufacturer. This goal however is by no means assured. The ISDN standard deals with only the first three layers of the ISO Model. There can be significant differences in the protocol used in the higher layers. See **Considerations** for additional discussion of this potential problem.

The Layered Protocol Concept

In a layered protocol, each separate layer is independently responsible for specific functions and tasks. Each lower layer supports the layers above it, and each successive layer is independent of how the layers below it perform their functions.

For example, the Physical Layer (layer 1 in Figure 61-4) provides physical connectivity support to the layers above it. The Session Layer (layer 5 in Figure 61-4) performs the functions of setting up and monitoring the communications session between the communicating terminals. The Session Layer at each terminal then passes action to the Presentation Layers which in turn pass action to the Applications Layers at the different terminals.

Layers 4 through 7 (the Transport Layer, Session Layer, Presentation Layer, and the Applications Layer) communicate with the like layer at each terminal, without concern for how the layers below them perform their functions. Each layer ‘‘does its own thing’’ under the assumption that all the supporting (lower) layers are doing their jobs. The higher layers do not enter the picture until the lower layers have done their jobs. The upper layers (above the *Communications Subnetwork Boundary* are independent from lower level software within the network (levels 1, 2, and 3) and correspond only to the matching layers at the sending and receiving termination points. The termination point may be the local switch (PRI) or may be a local (terminal associated) interface unit (BRI).

The System 85 Implementation

The ISDN/PRI is implemented for System 85 using a modified form of the DS1 Interface. The PRI uses a DS1 format that is similar to the AVD (Alternate Voice Data) format used with the System 85, DS1 Interface feature. This is the **23 B plus D** configuration on a 1.544 Mbps carrier. As with DS1 AVD service, the 23 bearer channels carry communications traffic, while the D channel (signaling channel) provides call control signaling and feature services for the 23 bearer channels. The main difference between ISDN/PRI and the formats used with the DS1 Interface feature is the form of the signaling. The DS1 feature uses a bit oriented signaling format, while ISDN uses MOS (Message Oriented Signaling).

The ISDN/PRI trunks are identified within the switch, and switch call processing for calls using these facilities is handled differently from calls using conventional facilities. The switch contains a separate layer of software that processes ISDN/PRI calls and then communicates with the standard call processing software to complete the calls to stations (or non-ISDN trunk facilities). In ISDN terminology, this process is called **Interworking**. Interworking is described later in this section.

End-to-End Connectivity: The ISDN concept of end-to-end ISDN connectivity applies only to the **switch level in a PRI environment**. The end-to-end connection may be digital all the way (if the end stations are digital, i.e., DCP terminals on a System 85). However, the connection is not ISDN all the way. The portion of the call from the switch to the end station is not an ISDN connection. Therefore, ISDN features and services that are not matched by switch features and services are not provided at the end stations. An exception to this is when the DMI MOS (Digital Multiplexed Interface Message Oriented Signaling) feature is involved. The DMI MOS feature treats the host computer as another ISDN/PRI switch. See **Interactions** and the DMI feature for information on how the DMI MOS feature functions with the ISDN/PRI feature.

Interworking

System 85 Originated Calls

Calls originating on the System 85 switch (and non-ISDN calls coming into the System 85 switch) are handled in a standard manner by the conventional call processing software. These calls can use all System 85 features and services allowed by their class-of-service. When the switch is ready to pass calls to an ISDN outgoing trunk, the ISDN call processing software is notified and ISDN routines are called into service.

The ISDN call processing generates the needed D channel messages and performs the ISDN functions and services, such as **Call-by-Call Service Selection** and **Channel Negotiation** (ISDN features and services are described later in this section). The ISDN call processing software converts information available to the switch, such as calling number and calling party name to ISDN messages when appropriate. It also converts the same kind of information from the distant switch (if available) to DCP ‘‘S’’ channel format and passes this information to the calling station (or called station on incoming calls) for use with the System 85, Display — Voice Terminal feature. When the ISDN connection has been set up, the end-to-end connection is made, and the call proceeds like a standard call as far as the user is concerned.

Incoming ISDN Calls

For incoming calls from ISDN facilities, the interworking process works in the same way as for outgoing calls, but in a reverse order. The incoming call is first processed by the ISDN call processing software. The standard switch software is notified by the ISDN layer that a call is ready for completion, and the standard call processing software sets up and services the switch side facilities (stations or non-ISDN trunk connections) in the same way as a conventional incoming call. All switch features and services that would normally be available (based on COS) are provided. Again, information such as calling number and calling party name is processed into the proper formats (DCP S channel messages for switch side stations and ISDN messages for the ISDN side of the call) and passed to the calling and called stations when appropriate.

Network Features and Services

The ISDN provides for a limited set of standard **network** features and services. Note that these are Network features and services rather than switch features and services. As such, they may differ in some respects from similar features and services provided by the System 85 switch. Where network features and services and switch features and services match (i.e., Calling Number and Display Voice Terminal), they can be used for interswitch calls rather than being limited to local calls. In Release 2, Version 4, System 85 supports the following ISDN features and services:

Call-by-Call Service Selection

This feature provides for improved efficiency in the use of ISDN trunk and trunk handling facilities. It allows various services to be used over the same facilities on a call-by-call basis. This means that you don't need separate trunk groups for WATS (Wide Area Telecommunications Service), DID (Direct Inward Dialing), and CO (Central Office) trunks. All these services can be provided over the same set of trunks.

Different calling service types are identified by ISDN messages for each call. Also, information identifying the type of call for voice service, or various types of data service, allows the same trunk facilities to be used for different call types. Also see *Dynamic Trunk Type* under **Considerations.**

Channel Negotiation

This service provides the called (terminating) switch with some say in selecting the bearer channel (trunk) to be used for an incoming call. If the bearer channel originally selected by the calling switch is not acceptable to the called switch, the called switch can request a change in the channel and the call can still be completed. Without this service, the called switch has no other option but to reject the call. Channel negotiation is not used for DCS calls or Trunk Verification calls.

Calling Party and Connected Party Number and Name Display

This feature functions with the System 85 Display — Voice Terminal feature through a form of **interworking**. For stations with a display capability, there are several possible display configurations. See the Display — Voice Terminal feature for a list of the terminal equipment with this display capability. Some examples of the display options available are shown in Figure 61-5.

ETN (Electronic Tandem Network) Compatibility

ETN compatibility means that ISDN trunks can be used within private networks set up as ETNs. Using ISDN trunks allows ISDN features and services to be added to the private network. With ISDN trunking for private networks, end-to-end ISDN connectivity is available even for calls that route over both private and public network facilities. This can be done even if each private network node does not have a direct connection to the public ISDN.

End-to-End ISDN Connectivity

This service allows users to specify that only ISDN facilities will be used in a particular connection. Note that this is an elective service and not necessarily a requirement of an ISDN. That is, the user can specify if a particular call is to use this service and not necessarily be required to use this service for all calls. Three options can be selected:

- *ISDN Facilities Required*. This ensures that only ISDN facilities will be used in connecting the call. If ISDN facilities are not available for the entire call routing, the call will fail (busy or reorder tone).

Incoming Call Displays

Both *NAME* and *NUMBER IEs* (Information Elements) are available in the ISDN message set.	JONES, TOM R (Calling Party Name)	NXX NXX XXXX (Calling Number)
If *NAME IE* is not available:	CALL FROM (Local Message)	NXX NXX XXXX (Calling Number)
If the *NAME IE* is received but not the *NUMBER IE:*	JONES, TOM R (Calling Party Name)	
If neither *NAME* nor *NUMBER IE* is available:	OUTSIDE CALL (Standard Local Message)	

Redirected Call* Displays

If *NAME IEs* are available:	SMITH, MARY B (Calling Party Name)	TO JONES, TOM R (Called Party)	d (Redirection Type)
If calling party *NAME IE* is not available:	NXX NXX XXXX (Calling Number)	TO JONES, TOM R (Called Party)	s (Redirection Type)

Outgoing Call Displays

Placing an Outgoing ISDN Call

While call is being dialed:	NXX NXX XXXX (Dialed Digit Display)
While call is progressing through the network:	OUTSIDE CALL (Standard Local Message)

Once the Connection Is Complete

If both *NAME* and *NUMBER IEs* are available:	SMITH, MARY B (Answering Party Name)	NXX NXX XXXX (Answering Number)
If *NAME IE* is not available:	ANSWERED BY (Local Message)	NXX NXX XXXX (Answering Number)
If neither *NAME* nor *NUMBER IE* is available:	OUTSIDE CALL (Standard Local Message)	

* Redirection is a feature of the System 85 switch (e.g., Call Coverage or Call Forwarding). Redirection is not an ISDN service.

Figure 61-5. Available ISDN Display Messages

End-to-End ISDN Connectivity (Contd)

- *ISDN Facilities Preferred*. This means that End-to-End ISDN connectivity will be provided if available. However, the call will not fail simply because such facilities are not available. If other than ISDN facilities are used, ISDN features and services may be lost.
- *Any Facilities Can Be Used*. This means that any available facilities can be used to complete the call. This method of routing may select non-ISDN facilities as a higher preference than ISDN facilities, either on a least cost basis or to preserve ISDN facilities for calls that require ISDN services. When other than ISDN facilities are used, ISDN features and services are lost.

In relation to this service, it is important to note that with PRI service, the End-to-End ISDN Connectivity applies only to the switch level. Connections from the switch to the local station are not ISDN except when the DMI MOS feature is involved (see the discussion of DMI MOS under **Interactions**).

Tandemed User-to-User Information

To send information to a remote ISDN user, the originating user may include a user-to-user information element in certain call setup and disconnect messages. This will allow special call related information to be passed from the calling party to the called party.

In the PRI environment, this capability has limited immediate application. With PRI, the user station is not an ISDN end point. In the System 85, Release 2, Version 4, implementation, this feature is allowed but not supported. That is, an end point that is capable of generating ISDN User-to-User Messages can pass them (to the ISDN level call processing), but the System 85 will not generate these messages for non-ISDN end points.

In System 85, Release 2, Version 4, the only end points capable of using this service are DMI MOS host computers. See DMI MOS under **Interactions** in this section or in the DMI section of this manual for more details on this option.

Call Detail Recording of ISDN Calls

In systems where the variable format CDR (Call Detail Record) is being used (3B2 Call Detail Recording Unit required), some ISDN specific information may be included in the CDR record. Possible ISDN specific information available includes:

- 10-digit calling number identification
- Network services identification.

Maintenance Services for ISDN Facilities

The ISDN/PRI feature includes both local and remote testing capabilities for ISDN facilities. The tests include on demand and automatic testing of ISDN hardware connections and the service level (bit error rate) provided by ISDN facilities.

Note that on many ISDN calls, a particular feature's availability depends on both ends of the connection supporting the feature. For example, the System 85, Release 2, Version 4, switch can support Calling and Connected Party Name and Number Display via interworking with the

Display — Voice Terminal feature. However, if the switch at the far end of the connection does not provide the information elements needed for these features, that information cannot be displayed on System 85 terminals. Special translations are required to provide all of the information needed. See Procedures 000, 210, and 354 in the Administration section for information on these translation requirements.

Feature History and Development

The ISDN/PRI feature is first available on System 85 with Release 2, Version 4.

USER OPERATIONS

The use of ISDN facilities is a software driven function. For example, placing an outgoing call is handled by the AAR or ARS features. The use of ISDN facilities is a function of the caller's class-of-service, FRL, and the AAR or ARS patterns invoked. Generally, there are no special user operations that distinguish user access to ISDN from the use of the AAR or ARS features. That is, a user cannot select or influence the use of ISDN calling when placing an outgoing call, except when the DMI (Digital Multiplexed Interface) feature is involved. See the section on the DMI feature for information on this exception.

CONSIDERATIONS

Dynamic Trunk Type

A new trunk type, the ISDN Dynamic Trunk (trunk type 120), is available with System 85, Release 2, Version 4. This trunk type supports the ISDN feature **Call-by-Call Service Selection**. With the dynamic trunk type, the switch is able to select between various available services (i.e., WATS, CO, tie trunk, etc.) using the same trunk group. That is, a given channel (trunk) in a dynamic trunk group can be used for a WATS call on one occasion, and the same trunk can be used for a local CO call the next time. This feature supports a more efficient use of the available ISDN trunks and trunk groups.

ISDN service is not limited to the use of dynamic type trunks. However, the Call-by-Call Service Selection feature is available only when this trunk type is used.

Effect of Protocol Differences

With ISDN, it is possible to establish both private and public networks that allow users of different types of switching and terminal equipment to share the same **networking** facilities. This does not, however, mean that all the equipment using the network will be fully compatible.

The ISDN standardizes layers 1 through 3 only of the ISO OSI Reference Model. The upper layers (layers 4 through 7), however, may be implemented differently on different network switches. In such a case, two switches in an ISDN public network may be able to make connections to one another but be unable to communicate (or communicate fully). In certain cases, such as when data security is needed, this can be a desirable characteristic. In cases where full communication is desired, the problem can be overcome by using common protocols or protocol converters.

The same is true for features and services provided. That is, while the ISDN standard may allow for a specific list of features and services, not all vendors may choose to implement the full list. Also, the ISDN recommendations allow for the implementation of user peculiar features and services. That is, a group of messages is available to provide features and services that are vendor defined and may be proprietary or at least vendor peculiar. Such features and services would be available only to users with that vendor's equipment or by license (permission) from that vendor.

ETNs (Electronic Tandem Networks)

Electronic tandem networks are compatible with the ISDN/PRI feature. This is because ETNs use the AAR (Automatic Alternate Routing) feature for routing calls through the network. The AAR feature (with **generalized route selection**) is needed to handle ISDN call control.

Extension Number Steering

Extension number steering, used by some private networking arrangements, is not compatible with the ISDN/PRI feature. Networks that use extension number steering for call routing (i.e., Main/Satellite Networks) cannot use internal ISDN trunking arrangements.

Hard and Soft Processor Swaps

Stable calls over ISDN trunk groups endure a hard processor swap. However, calls cannot be placed over ISDN trunk groups during a hard processor swap.

Legal Considerations

The use of special access services with the ISDN Interface feature is subject to local PUC rules and regulations. Its availability will vary from time to time and region to region based on current PUC (Public Utilities Commission) rulings and tariffs. The availability of special access service must be determined locally.

Networking Considerations

The ISDN/PRI feature introduces a wide variety of possibilities in the area of networking. Each of these possibilities introduces new and different considerations. For networking arrangements that involve other than System 85, Release 2, Version 4 switches, a detailed discussion of networking possibilities, requirements, and considerations is provided in a special manual, **AT&T System 85, Advanced Networking Switch, Integrated Services Digital Network Primary Rate Interface (ISDN-PRI)**, 555-025-102.

INTERACTIONS WITH OTHER FEATURES

The following System 85 features affect or are affected by the operation of the ISDN/PRI feature.

ACCUNET Service Interface

The ACCUNET Service Interface feature works with the ISDN/PRI feature through the **interworking** function. However, ACCUNET Service Interface feature calls are limited to a maximum data rate of 56 Kbps. ISDN calls can run at data rates as high as 64 Kbps. For ISDN calls using data rates of 56 Kbps or less, **interworking** passes calls to the ACCUNET Service Interface with no difficulty. However, ISDN calls that use data rates of more that 56 Kbps cannot be passed to ACCUNET Service Interface facilities and are blocked by the System 85 switch.

ARS (Automatic Route Selection)/AAR (Automatic Alternate Routing)

Calls placed over ISDN facilities use the AAR or ARS features for ISDN access. To work effectively for ISDN, the **generalized route selection** version must be in effect. In this way, the placing of an ISDN call is transparent to the user. Factors involved in AAR and ARS pattern selection include calling party COS (class-of-service) and trunk bearer capability.

COS (Class-of-Service)

The AAR and ARS pattern searches work differently for ISDN calls based on the calling station COS. For ISDN, the calling parties COS specifies one of three options as follows:

ISDN Facilities Required

If ISDN facilities are required by a user's class of service, only ISDN end-to-end facilities are to be used for AAR or ARS routing. If ISDN end-to-end connections are not available, the call will either queue or receive reorder treatment.

ISDN Facilities Preferred

If ISDN facilities are preferred but not required by the COS, ISDN facilities are checked first, followed by a check for non-ISDN facilities.

Any Facilities Available

Any available facilities can be used to complete the call. In this case, AAR and ARS pattern searches work like they do for a non-ISDN call.

Bearer Capability

The bearer capability of an ISDN trunk (i.e., the type of call the trunk can support) is another factor used by the AAR/ARS pattern selection process in determining which trunk group to use for a particular ISDN call. For ISDN purposes, five types of bearer capability are recognized:

Bearer Code	Type of Traffic That Can Be Carried
0	Voice and voice-grade data allowed
1	Mode 1 data, 56 Kbps allowed
2	Mode 2 data, 64 Kbps allowed
3	Mode 3 data
4	Mode 0 data.

Attendant Control of Trunk Group Access

Generally, the Attendant Control of Trunk Group Access feature will work normally for ISDN calls. However, to place an ISDN call, the **AAR or ARS feature must be used**. Therefore, attendants cannot use the Attendant Direct Trunk Group Selection feature to complete an ISDN call.

Attendant Direct Trunk Group Selection

For proper routing and to generate messages needed for ISDN calling, all ISDN calls should be placed using the AAR or ARS feature. The Attendant Direct Trunk Group Selection feature invokes a trunk group access code and not an AAR or ARS pattern. Therefore, the Attendant Direct Trunk Group Selection feature cannot be used to extending an call over ISDN.

DMI (Digital Multiplexed Interface)

In Release 2, Version 4, the DMI feature is available in two forms: BOS (Bit Oriented Signaling), and MOS (Message Oriented Signaling). Both forms are compatible with the ISDN Interface feature. However, there are differences in the way they function with ISDN/PRI and the features and services available.

DMI BOS

The BOS (Bit Oriented Signaling) form of DMI relies on the **interworking function** of the System 85 switch when accessing (or being accessed by) ISDN/PRI trunks. A DMI BOS call is processed on the switch side by conventional call-processing software, while the ISDN side of the call is handled by the ISDN call processing software (see the **System 85 Implementation**, under **Description**). These calls are **not** ISDN calls end-to-end (from local host computer to remote computer). Figure 61-6 illustrates this type of arrangement.

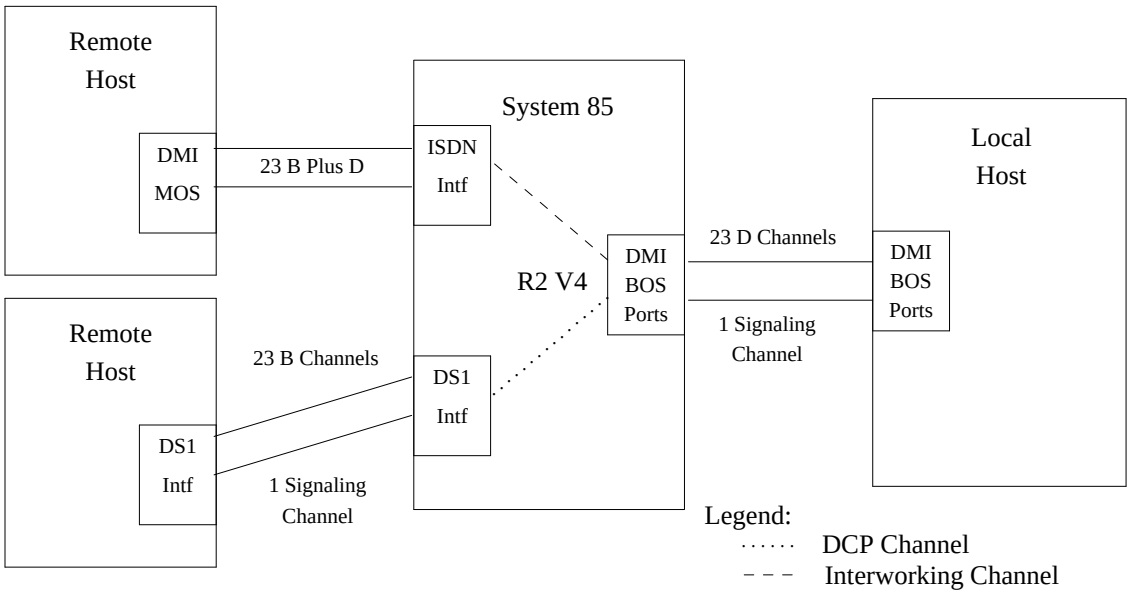

Figure 61-6. ISDN / DMI BOS Service Arrangement

DMI MOS

The MOS (Message Oriented Signaling) form of the DMI feature is actually another ISDN/PRI. With this interface, the System 85 switch performs a tandem switching function within the ISDN. The connection between the local and remote host is ISDN end-to-end (assuming that the remote computer also has a DMI MOS or equivalent interface). Interworking is not required unless the remote host is not supported by ISDN (or DMI MOS) interfaces. The full set of ISDN features and services is available between the local and remote hosts. These include capabilities such as Call-by-Call Service Selection (driven by the host computer rather than the switch), Channel Negotiation (at the host computer level), and Tandemed User-to-User Information. Figure 61-7 illustrates this type or arrangement.

The two forms of the DMI feature are not mutually exclusive. That is, the same local host can connect to the same System 85, Release 2, Version 4, switch with both a DMI MOS and a DMI BOS interface at the same time. The merits of such an arrangement must be determined locally on a case-by-case basis.

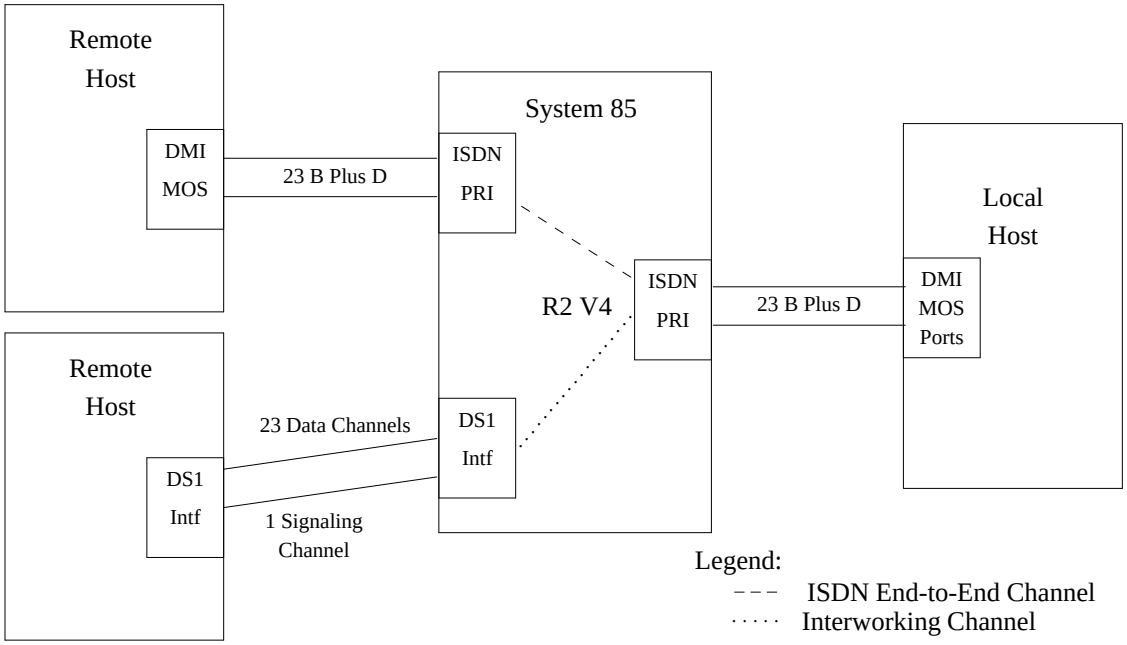

Figure 61-7. ISDN / DMI MOS (Message-Oriented Signaling) Service Arrangement

DS1 Interface

The ISDN/PRI is similar in many respects to the DS1 Interface and uses an AVD (Alternate Voice/Data) type carrier circuit like that used with the DS1 Interface feature. The signaling used with these two features is, however, different. The DS1 Interface feature uses a bit-oriented signaling protocol, while the ISDN/PRI feature uses message-oriented signaling. These two features are separate but compatible through the interworking function. That is, traffic that originated on one type of facility can be passed to the other type at a tandeming point. However, ISDN end-to-end connectivity and ISDN features and messaging is lost when this is done.

Display — Voice Terminal

The Display — Voice Terminal feature works with the ISDN/PRI feature through the interworking function. Message type information provided by ISDN is passed to the Display — Voice Terminal feature software and made available to System 85 terminals with the display capability. Information displayed is not ISDN direct, but this fact is not readily apparent to the user.

DCS (Distributed Communications System)

A DCS arrangement can be set up using either ETN (Electronic Tandem Network) or Main/Satellite, trunking arrangements. The ISDN/PRI feature is compatible with ETN trunking arrangements but not with the Main/Satellite configuration.

This *does not mean* that a DCS with a Main/Satellite configuration cannot be connect to an ISDN. It does mean the ISDN facilities cannot be used between the Main and Satellite switches. The reason is that a Main/Satellite arrangement uses Extension Number Steering. **Extension Number Steering** cannot handle ISDN message processing and the required facilities oriented pattern searches. The AAR (Automatic Alternate Routing) and ARS (Alternate Route Selection) features with **generalized route selection** are needed for the route and pattern discrimination required by ISDN call processing.

In a DCS, ISDN/PRI trunking can be used between nodes that are arranged as an ETN. Conventional (non-ISDN) trunking must be used for any Main/Satellite connections. ISDN service can be provided to the Main (assuming the Main is a Release 2, Version 4 switch) but not between the Main and any Satellite switch(es). Interworking at the Main will take care of call processing services for ISDN calls originating (or terminating) on a Satellite station. Figure 61-8 illustrates the various DCS/ISDN/PRI connectivity arrangements.

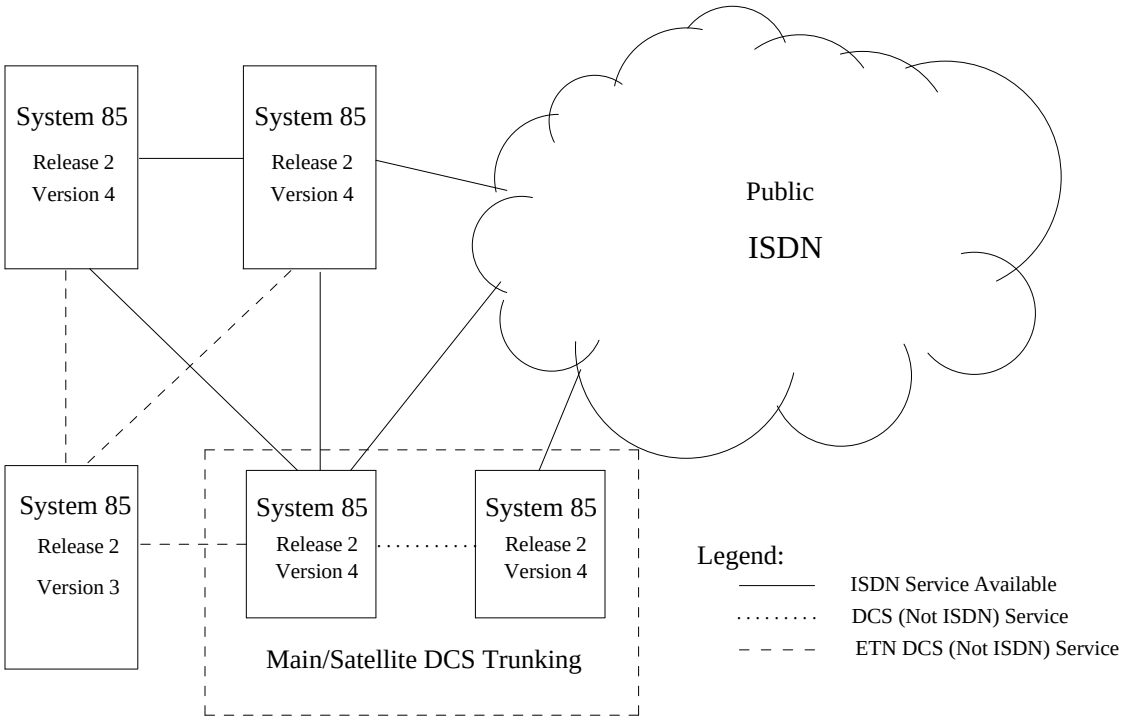

Figure 61-8. DCS/ISDN Network Connectivity

FX (Foreign Exchange) Access

The FX feature is compatible with the ISDN Interface feature. However, FX service is not currently being offered on a Call-By-Call Service Selection basis. This means that an ISDN T-1 carrier can provide FX service on an all or nothing basis only. This is a constraint of the public network and not of the System 85 switch or ISDN. System 85 will support FX Service on a Call-By-Call Service Selection basis when it is available from the network.

ISN (Information Systems Network) Interface

The ISN Interface feature and the ISDN/PRI feature are compatible. ISN stations can access ISDN/PRI facilities (and ISDN/PRI calls can access ISN stations) through the interworking function.

Intercept Treatment

The Intercept Treatment feature works a little differently for ISDN calls than it does for other types of network calls. On other networks, Intercept Treatment is returned by the remote or intercepting switch with the trunk connections remaining in place until the originating party disconnects (goes on-hook).

On ISDN calls, intercept treatment is returned by the closest switch to the point of call origination that is capable of properly returning the type of intercept treatment being given, and the call is broken down to that point before intercept treatment is returned. Generally, Intercept Treatment — Attendant and Intercept Treatment — Recorded Announcement are still returned by the remote switch. Intercept Treatment — Tone is returned by the local (point of origin) switch.

IXC (Interexchange Carrier) Access

The IXC Access feature works normally with the ISDN/PRI feature. Assuming the selected carrier provides ISDN service, ISDN calls will route normally. However, if the selected carrier does not provide ISDN service and the COS of the call indicates **ISDN facilities are required**, the call cannot be completed.

Last Number Dialed

The Last Number Dialed feature stores and redials the digits dialed during an ISDN call.

Leave Word Calling

The Leave Word Calling feature is a System 85 switch feature and not an ISDN feature in Release 2, Version 4. Leave Word Calling will work within a DCS with ISDN connections (through the interworking function) but not for ISDN calls to or from the public network or a non-DCS private network.

Main/Satellite/Tributary

The Main/Satellite/Tributary networking feature is not compatible with the ISDN/PRI feature. That is, ISDN trunking arrangements cannot be used within a Main/Satellite or Tributary network. The Main (assuming it is a System 85, Release 2, Version 4, switch) can use the ISDN/PRI feature to terminate trunks from outside the network (private or public network trunks), but ISDN service cannot be used within the Main Satellite or Main Tributary network. See also the interaction discussion for the DCS feature.

Malicious Call Trace

The Malicious Call Trace feature uses the **calling number** IE (Information Element) from the ISDN message set, when available. This number is displayed at the controlling attendant console when the Malicious Call Trace feature is activated.

Modem Pooling

The Modem Pooling feature should work the same on ISDN calls as it does for other types of network data calls. The switch at each end of the call must determine the need for a modem pooling conversion resource based on the administered characteristics of the station end point.

A problem may occur if an analog interfaced data station places an ISDN call to a digital interface data end point on a remote switch. Because the call is coming in on an AVD type DS1 trunk facility, the receiving switch may not be able to recognize that a modem pooling conversion resource is needed.

Another problem could occur if data calls use the ‘‘**ISDN Facilities Preferred bearer code**.’’ If such calls start out on ISDN facilities and then are transferred to analog facilities at a tandem node, it may be too late to insert a modem pooling conversion resource at the originating switch.

Queuing

The Queuing feature works a little differently for certain ISDN calls. Ordinarily, a call will queue (if necessary) on the first-choice trunk group in the appropriate AAR or ARS pattern. For ISDN calls, if the COS (Class-of-Service) indicates ISDN facilities only, the call will queue on the first **ISDN trunk group** with the needed bearer capability in the pattern (see discussion under AAR/ARS interaction). This may not be in the first-choice trunk group.

Remote Access

The Remote Access feature should work normally with ISDN through the **interworking** function. The accessibility of ISDN facilities from a remote access trunk will depend on the COS assigned to the line appearance of that trunk.

Trunk Verification — Attendant

The trunk verification features work in the same way for ISDN trunks as they do for other types of trunks, except for the ISDN Dynamic trunk types. These trunks reflect a **default** trunk type based on the far end of the trunk connection.

Trunk Verification — Voice Terminal

The trunk verification features work in the same way for ISDN trunks as they do for other types of trunks, except for the ISDN Dynamic trunk types. These trunks reflect a **default** trunk type based on the far end of the trunk connection.

Variable Format Call Data Recording

The variable format call data record can, as an administrable option, specify the trunk type used on ISDN ‘‘dynamic trunk type’’ calls.

RESTRICTING FEATURE USE

The basic method of controlling access to the ISDN/PRI for System 85 is through the use of the COS assigned to a given terminal. The COS can be used to deny access to outside facilities (including ISDN) from local terminals, or to deny access to local terminals from outside calls. The COS is also used to specify one of three levels of access for local terminals to ISDN facilities as follows:

- Use ISDN facilities only
- Use of ISDN facilities is preferred but not required
- Use any facilities available.

Access to ISDN facilities can also be controlled on a temporary and selective basis through the Attendant Control of Voice Terminals feature. This feature can temporarily block access to outside facilities (including ISDN facilities) from selected terminals or groups of terminals. This feature can also be used to temporarily block access to local terminals or groups of terminals from outside calls. This blocking is on an outside (trunk) call basis generally and is not specifically for ISDN calls. That is, access can be blocked to or from all outside calls, but not ISDN calls only.

Access to ISDN facilities can also be controlled by using the Attendant Control of Trunk Group Access feature. Using this feature may alter the function of some ISDN features.

HARDWARE REQUIREMENTS

The ISDN/PRI feature uses a hardware configuration similar to the DS1 Interface feature. The hardware needed consists of the following:

- DS1/73 Series Port Carrier

  The DS1/73 Series Port Carrier is designed to accommodate the circuit boards used for both the DS1 Interfaces and the 73 Series line and trunk circuit boards. Each carrier supports two circuit boards in the DS1 configuration. For ISDN/PRI applications, the two circuit packs in a port carrier can be arranged as follows:

  1. Both for ISDN/PRI
  2. One for ISDN/PRI and the other for conventional DS1 applications
  3. One for ISDN/PRI and the other for 73 Series applications.

- ANN-35 ISDN Primary Rate Port

  The ANN-35 is a single circuit pack that supports the 23 bearer channels and the D-channel called for in the ISDN/PRI standard. It also provides termination facilities for the ISDN levels 1 and 2 protocol. Note that this circuit pack is different from the standard DS1 interface circuit packs (ANN-11C, -11D, or -11E).

- TN-380D, Module Processor

  The TN380D (Module Processor) must be used in place of the TN380B or TN380C for ISDN/PRI applications. The TN380D provides for the message signaling format and larger processor instruction strings required by the ISDN feature.

- TN463 SCS (System Clock Synchronizer)

  For high-speed data applications, each switch requires an SCS (System Clock Synchronizer) circuit (TN463). In a single-module system, the SCS resides in the module control carrier. In a multimodule system, the SCS resides in the TMS control carrier.

FEATURE ADMINISTRATION

The ISDN/PRI feature is assigned on a per system basis. It is administered with the MAAP (Maintenance and Administration Panel). The customer can partially administer ISDN/PRI using the SMT (System Management Terminal). This feature can also be administered using CSM (Centralized System Management).

The following are the applicable MAAP and SMT procedures.

MAAP AND SMT PROCEDURES
INTEGRATED SERVICES DIGITAL NETWORK / PRIMARY RATE INTERFACE

PROCEDURE	WORD	PURPOSE	SMT
000	3&4	Assigns single terminal translations, including a code for the NPA-NXX-X designator used with ISDN calling number identification. (See also Procedure 354, Word 3.)	Yes
010	4	Assigns features to an extension class of service, including the ISDN Interface feature. Word 4 is used to specify ISDN access and routing.	Yes
100	1	Assigns trunk group translations including trunk types and route advance patterns. A new trunk type, 120 (ISDN Dynamic Trunk), is available for ISDN use. However, ISDN service is not limited to this trunk type.	No
100	2	Assigns digital trunk group characteristics such as data rates. For ISDN trunks, the following characteristics are applicable: • Data Rate = 64 Kbps (‘‘1’’ in Field 2) • Asynchronous • Full Duplex.	No
100	3	Assigns trunk types including ISDN Dynamic and specifies signaling for ISDN trunk groups.	No
101	1	Assigns trunk group translations (e.g., use of battery reversal, signaling, SMDR, etc.) and assigns ISDN trunk groups as AVD.	No
103	—	Assigns trunk group translations for network trunks (e.g., Data Protection, FRL, etc.). For ISDN trunk groups, the following specific encodes are required: Field 14 = ‘‘1’’ for collect all digits before outpulsing Field 15 (bearer capability) ‘‘0’’ = voice, or voice grade data ‘‘1’’ = mode 1 data ‘‘2’’ = mode 2 data ‘‘3’’ = mode 3 data.	No
108	—	Assigns the ISDN Terminating Test Line telephone digits.	No
116	1	Assigns trunks to DS1 channels. For ISDN applications, Field 11, Interface Endpoint blocks the use of ISDN trunks with non-ISDN endpoints.	No

MAAP AND SMT PROCEDURES INTEGRATED SERVICES DIGITAL NETWORK / PRIMARY RATE INTERFACE			
PROCEDURE	**WORD**	**PURPOSE**	**SMT**
204	—	Assigns LDNs to attendant consoles and associated partitions. For ISDN, each attendant console must be assigned an LDN for use in the outgoing call message when an ISDN call is placed from the attendant console.	No
210	2	Assigns an LDN and NPA-NXX-X designator to an attendant console for use with the ISDN Calling Number Display function.	Yes
260	1	Assigns DS1 circuits to equipment locations and assigns signaling requirements and transmission type. For the ISDN application the following specific encodes apply: • Application: Field 14 = ‘‘5’’ • Port Type: Field __ = ‘‘45’’ • Bit Inversion: Field 15 = ‘‘ ’’ • Transmission Type: Field 16 = ‘‘ .’’	No
262	1	Administers ISDN specific options such as: • Interface type • ISDN facility test type • TEI (Terminal Endpoint Identifier) • ISDN level 2 protocol parameters.	No
275	1	Assigns system class-of-service features, including Private Network Access.	Yes
275	4	Assigns additional system class-of-service features including ISDN active.	Yes
290	1	Displays DS1 trunk interface and SCS circuit assignments (equipment locations) and identification information. To search for ISDN specific trunk assignments, encode 25 or 26 is entered in the Port Type field.	Yes

MAAP AND SMT PROCEDURES
INTEGRATED SERVICES DIGITAL NETWORK / PRIMARY RATE INTERFACE

PROCEDURE	WORD	PURPOSE	SMT
309	1	Assigns trunk groups to ARS plans, patterns, and preferences. Identifies specific ARS routings for ISDN applications.	Yes
309	5	Assigns ISDN parameters to ARS routings with ISDN applications. Specific parameters included are: • ISDN Dynamic trunks • Network specific facilities • Bearer capacities: Code 0 Voice or voice grade data Code 1 Mode ‘‘1’’ data (56 Kbps) Code 2 Mode ‘‘2’’ data (64 Kbps) Code 3 Mode ‘‘3’’ data Code 4 Mode ‘‘0’’ data.	Yes*
321	1	Assigns trunk groups to AAR plans, patterns, and preferences. Identifies specific AAR routings for ISDN applications.	Yes
321	5	Assigns ISDN parameters to AAR routings with ISDN applications. Specific parameters included are: • ISDN Dynamic trunks • Network specific facilities • Bearer capacities: Code 0 Voice or voice grade data Code 1 Mode ‘‘1’’ data (56 Kbps) Code 2 Mode ‘‘2’’ data (64 Kbps) Code 3 Mode ‘‘3’’ data Code 4 Mode ‘‘0’’ data.	Yes*
354	3	Assigns the prefix digits (NPA-NXX-X) to the extension translation codes assigned in Procedure 000, Words 3 and 4. These are used to provide ISDN Calling Number Display.	No

* Display only procedure for SMT.

The following are the applicable CSM Command Paths utilizing the **admin** area of TCM or FM.

CSM SCREENS — MASKS INTEGRATED SERVICES DIGITAL NETWORK/ PRIMARY RATE INTERFACE		
APPL'N	**OBJECT**	**PURPOSE**
TCM	extension	Assigns single terminal transactions, including a code for the NPA-NXX-X designator used with ISDN calling number identification.
TCM	class-of-service	Assigns features to an extension class of service, including the ISDN Interface feature.
FM	trk-grp	This command provides administration and assignment for the following: 1. Trunk group translations including trunk types and route advance patterns. 2. Digital trunk group characteristics, such as data rates, for the ISDN trunks. 3. Trunk types including ISDN Dynamic and specifies signaling for ISDN trunk groups. 4. Trunk-group translations (e.g., use of battery reversal, signaling, SMDR, etc.) and assigns ISDN trunk groups as AVD. 5. Trunk-group translations for network trunks (e.g., Data Protection, FRL, etc.). 6. ISDN Terminating Test Line telephone digits. 7. Trunk assignment to DS1 channels.
TCM	consoles-messages	Assigns LDNs to attendant consoles and associated partitions. For ISDN, each attendant console must be assigned an LDN for use in the outgoing call message when an ISDN call is placed from the attendant console.
TCM	console-equipment	Assigns an LDN and NPA-NXX-X designator to an attendant console for use with the ISDN Calling Number Display function.
TCM/FM	sys-cos	Assigns system class — of — service features including Private Network Access and ISDN active.

CSM SCREENS — MASKS INTEGRATED SERVICES DIGITAL NETWORK/ PRIMARY RATE INTERFACE (Contd)		
APPL'N	**OBJECT**	**PURPOSE**
FM	ars-pattern	Assigns trunk groups to ARS plans, patterns, and preferences. Identifies specific ARS routings for ISDN applications. Assigns ISDN parameters to ARS routing with ISDN applications.
FM	aar-pattern	Assigns trunk groups to AAR plans, patterns, and preferences. Identifies specific AAR routings for ISDN applications. Assigns ISDN parameters to AAR routings for ISDN applications.
FM	npa-nxx-designator	Creates an abbreviation to represent an NPA (area code), NXX (local exchange), and a thousands digit. This abbreviation is assigned to an extension or attendant console. Up to 99 designators, numbered 1 to 99, may be defined.

INTERCEPT TREATMENT

DESCRIPTION

The Intercept Treatment feature provides consistent treatment for calls that cannot complete in the normal manner. The forms of treatment provided are:

Intercept Treatment—Tone

Provides intercept tone for internal or private network calls where calling parties can be expected to understand the meaning of intercept tone. The tone alternates rapidly between a high and low pitch.

Provides reorder tone (fast busy signal) for calls originated from the public network.

Intercept Treatment—Tone is the default form of Intercept Treatment when other options are not administered.

Intercept Treatment—Attendant

Allows the attendants to provide information and assistance to callers on internal, DID (Direct Inward Dialing), or incoming private network access calls that cannot complete as dialed. When an intercepted call is directed to an attendant, the Attendant Display (e.g., INTC) provides this information to the attendant. Optionally, using a dial access code, an attendant can divert attendant seeking calls, including Attendant Intercept calls, to a recorded announcement. This ability reduces the attendant workload during busy periods.

Intercept Treatment—Recorded Announcement

Provides a set of recorded announcements for internal, DID, and private network calls that cannot complete as dialed. The switch administrator selects and records the messages.

A second recorded announcement can be provided for internal, DID, and incoming private network calls to disconnected extensions. The switch administrator selects the recorded message to be provided.

Intercept Treatment—Recorded Announcement With Time-Out to Attendant

Provides a set of recorded announcements for internal, DID, or private access calls that cannot be completed as dialed. Calls that do not disconnect after the announcement route to the attendant. The switch administrator selects the messages.

Flexibility is available to allow different types of Intercept Treatment to be returned to callers for different types of denied calls. The customer can select the desired type of Intercept Treatment for different kinds of calls except that Intercept Tone cannot be used for DID calls from the public network. Also, a variety of recorded announcements is available to allow the announcement's message to suit the denied call.

Intercept treatment is provided when any of the following conditions are met:

- A digit is not dialed within 10 seconds after receiving dial tone.
- A pause of more than 10 seconds elapses between dialed digits.
- An invalid (restricted) first digit is dialed.
- An invalid trunk or feature access code is dialed.
- An unassigned terminal number is dialed.
- A recently disconnected terminal number is dialed.
- A call is attempted that is denied by either the class of service or Attendant Control of Voice Terminals restriction.
- The user attempts to activate a feature that is not authorized to the terminal.
- A feature is used incorrectly (e.g., activating Call Forwarding when the feature is already active).

Feature History and Development

A basic form of the Intercept Treatment feature was first available for System 85 with Release 1.

With the Release 2, Version 1 software package, the flexibility of this feature was increased. Using the R2 V1 (or later) software, System 85 is able to return different types of Intercept Treatment for different types of denied calls.

USER OPERATIONS

The following are the user operating procedures for this feature.

To Divert Attendant Calls to a Recorded Announcement:

- Press an idle loop button. [PA lamp goes out, and loop lamp lights.]
- Press START. [Dial tone]
- Dial the Activate Announcement access code. [Confirmation tone]
- Press RELEASE. [PA lamp lights, and loop lamp goes out.]

To Deactivate the Diversion of Attendant Calls to a Recorded Announcement:

- Press an idle loop button. [PA lamp goes out, and loop lamp lights.]
- Press START. [Dial tone]

- Dial the Cancel Announcement access code. [Confirmation tone]
- Press RELEASE. [PA lamp lights, and loop lamp goes out.]

CONSIDERATIONS

Mutually Exclusive Options

Attendant Intercept and Recorded Announcement Intercept (both optional) cannot be used together. However, a set of recorded announcements which time-out to Attendant Intercept is available.

Announcement Set Limits

The use of multiple recorded announcements could require several 13A or KS-65270 announcement sets.

The 13A system provides up to eight separate messages per announcement set. The maximum duration of a recorded announcement on the 13A announcement system is 24 seconds.

The KS-65270 system provides one message per announcement set. The maximum duration of a recorded announcement on the KS-65270 digital announcer is 16 seconds.

Intercept Queuing Delays

When an intercepted call is routed to a recorded announcement that is already playing, the new call must wait until the announcement is finished before being connected. These calls cannot be connected to a recorded announcement in progress.

Announcement Barge-In for Attendant-Seeking Calls

When an attendant diverts all attendant-seeking calls to a recorded announcement, these calls will barge into an announcement that is already playing. Since these attendant calls could be emergency calls and their corresponding announcements quite lengthy, allowing the calls to barge in is deemed preferable to placing the calls in an announcement queue.

Recorded Announcement Limit

Based on time-slot and TMS-blockage limitations, as many as 255 callers per module can listen to the same recorded announcement at the same time. In practice, the limit is considerably lower.

The Intercept Treatment software contains a 2-second task that adds an announcement to the time slot of every calling party waiting to hear the announcement.

INTERACTIONS WITH OTHER FEATURES

The following System 85 features affect or are affected by the operation of this feature.

CMDR (Centralized Message Detail Recording)

If an incoming trunk call receives intercept treatment that routes it to the attendant, call records show the call as if the attendant had been dialed directly, regardless of whether recording of ineffective attempts is active or not.

Dial Access to Attendant

The Attendant Diversion to Recorded Announcement function overrides the Dial Access to Attendant feature. When an attendant activates Attendant Diversion to Recorded Announcement, a local voice terminal user cannot reach the attendant queue or a selected attendant. Instead, these calls are diverted to the recorded announcement.

ISDN (Integrated Services Digital Network)/PRI (Primary Rate Interface)

The Intercept Treatment feature works a little differently for ISDN calls than it does for other types of network calls. On other networks, Intercept Treatment is returned by the remote or intercepting switch with the trunk connections remaining in place until the originating party disconnects (goes on-hook).

On ISDN calls, intercept treatment is returned by the closest switch to the point of call origination that is capable of properly returning the type of intercept treatment being given, and the call is broken down to that point before intercept treatment is returned. Generally, Intercept Treatment — Attendant and Intercept Treatment — Recorded Announcement are still returned by the remote switch. Intercept Treatment — Tone is returned by the local (point of origin) switch.

Multiple Listed Directory Numbers

The Attendant Diversion to Recorded Announcement function overrides the Multiple Listed Directory Numbers feature. When an attendant activates Attendant Diversion to Recorded Announcement, a public-network caller cannot reach the attendant queue. Instead, these calls are diverted to the recorded announcement.

Precedence Calling

Incoming Precedence Calling calls that receive intercept treatment will be given Attendant Intercept, regardless of other options that may be administered.

SMDR (Station Message Detail Recording)

Same as the CMDR interaction.

Tenant Services

The Intercept Treatment feature is administered on a per-system basis. If the Intercept Treatment feature *is programmed* in Procedure 289, Word 1, partitioning denials for internal calls always cause the switch to return the type of intercept administered for internal calls to vacant access codes (usually, intercept tone). If the Intercept Treatment feature *is not programmed* in Procedure 289, Word 1, the switch always returns the default types of intercept treatment: intercept tone for internal calls and reorder tone for calls from the public network.

Intercept Treatment—Attendant

In a partitioned System 85, this function of the Intercept Treatment feature routes intercepted calls to an associated attendant partition. Incoming trunk calls placed to *invalid extension numbers* are routed to an attendant partition assigned to the trunk group. (If an attendant partition has not been assigned to the trunk group in Procedure 270, Word 5, the intercepted call routes to Attendant Partition 0.) Incoming trunk calls placed to *valid extension numbers* that are restricted from receiving the calls (e.g., by DID Restriction, Inward Restriction, or Termination Restriction) are routed to an attendant partition assigned to called extension's partition.

Intercept Treatment—Recorded Announcement

The recorded announcement messages for the Intercept Treatment feature are system-wide messages. There is no capability to assign messages with different content for different partitions.

Unattended Console Service—Call Answer Any Voice Terminal

If an attendant activates Attendant Diversion to Recorded Announcement and then an attendant activates Unattended Console Service, calls placed to the attendant queue do not enter the CAAVT queue. Instead, these callers will receive the recorded announcement. If this operation is not desired, the attendant should deactivate Attendant Diversion to Recorded Announcement before activating Unattended Console Service.

Unattended Console Service—Preselected Call Routing

If an attendant activates Attendant Diversion to Recorded Announcement and then an attendant activates Unattended Console Service, calls placed to the attendant queue do not complete to the preselected voice terminal. Instead, these callers will receive the recorded announcement. If this operation is not desired, the attendant should deactivate Attendant Diversion to Recorded Announcement before activating Unattended Console Service.

Variable Format Call Detail Recording

If an incoming trunk call receives Intercept Treatment and is routed to the attendant, the call record looks as if the attendant had been dialed directly. This interaction occurs regardless of whether recording of ineffective attempts is active or not.

HARDWARE REQUIREMENTS

The Intercept Treatment feature requires the following additional or special hardware.

- 13A announcement system(s) (eight channels per 13A), A 36A voice coupler, with a 2012D power transformer, is required for each 13A announcement trunk.

  or

- KS-65270, L12 digital announcer(s) (single-channel announcement set) to provide the recorded announcements. One SN228B or SN229 line circuit (four circuits per pack) must be provided for each KS-65270 to support remote announcement recording.
- Space in an auxiliary cabinet to house the announcement set(s)
- An auxiliary trunk circuit of an SN231 circuit pack for each announcement trunk (four circuits per SN231).

FEATURE ADMINISTRATION

Assignment of the Intercept Treatment feature is on a per-call type and on a per-trunk group basis. The customer can partially administer this feature using the SMT (System Management Terminal). This feature can also be administered using CSM (Centralized System Management).

The following are the applicable MAAP and SMT procedures.

MAAP AND SMT PROCEDURES — INTERCEPT TREATMENT			
PROCEDURE	**WORD**	**PURPOSE**	**SMT**
000	1	When an extension is removed from service, it goes into the ‘‘Recent Disconnect’’ state for the system default interval. Calls to that extension receive the intercept treatment assigned to that state. A second removal makes the extension unassigned.	Yes
003	1	Displays and changes the remaining interval for an extension in the recent disconnect state. Also can be used to take an extension out of the recent disconnect state.	Yes
100	1	Assigns trunk type 52 for a recorded announcement trunk group.	No
101	—	Administers the characteristics of a recorded announcement trunk group.	No
150	—	Assigns a trunk for each separate recorded announcement to the recorded announcement trunk-group. All announcements can be in the same trunk group.	No
204	—	Administers console messages for the three classes of intercept calls: vacant dial access code, restricted feature or facility, or recently disconnected extension. Also administers a message for attendant diversion to recorded announcement.	No
275	4	Sets the system default for the recent disconnect interval.	Yes
289	1	Assigns the type of Intercept Treatment and specifies the recorded announcement number (from 1 to 15) to each type of call requiring Intercept Treatment.	Yes
350	1	Assigns the first digit of the feature dial access codes (if required).	No
350	2	Assigns the feature dial access codes for diverting attendant calls to recorded announcement. The applicable encodes are as follows: 80 Activate 81 Cancel.	No

The following are the applicable CSM Command Paths utilizing the **admin** area of TCM or FM.

CSM SCREENS — MASKS INTERCEPT TREATMENT		
APPL'N	**OBJECT**	**PURPOSE**
TCM	extension	This command administers an extension line number and extension features and attributes. When an extension is removed from service, it goes into the ''Recent Disconnect'' state for the system default interval. Calls to that extension receive the intercept treatment assigned to that state.
TCM	recent-disconnect	Changes or displays information about extensions that are in the recent-disconnect state.
FM	trk-grp	Assigns Trunk Type 52 for a recorded announcement interface, and assigns a trunk for each separate recorded announcement trunk group. All announcements can be in the same trunk group. This command also administers the characteristics of a recorded announcement trunk group.
TCM	console-messages	Administers console messages for the three classes of intercept calls: vacant dial access code, restricted feature or facility, or recently disconnected extension. Also administers a message for attendant diversion to recorded announcement.
TCM/FM	sys-cos	Administers the system default for the recent disconnect interval.

CSM SCREENS — MASKS INTERCEPT TREATMENT (Contd)		
APPL'N	**OBJECT**	**PURPOSE**
FM	intercept	Programs a specific type of intercept treatment for various call sources and causes for intercept treatment. Intercept treatments include: — Tone: provides intercept tone for internal or private network calls, and provides reorder tone (rapid busy signal) for calls from the public network. — Recorded Announcement: provides a set of recorded announcements for calls that cannot be completed as dialed. A second announcement can be provided for calls to disconnected stations. The announcement number must be entered. — Diversion to attendant: allows attendants to assist callers on calls that cannot be completed as dialed. — Recorded announcement followed by diversion to attendant: provides a set of recorded announcements for calls that cannot be completed as dialed. Calls that do not disconnect after the announcement route to the attendant.
TCM/FM	first-digit	Assigns the first digit of the feature dial access codes (if required).
TCM/FM	dial-access-code	Assigns the feature dial access codes for diverting attendant calls to recorded announcement.

INTERCOM—AUTOMATIC

DESCRIPTION

The Automatic Intercom feature provides the equivalent of a dedicated talking path between two multiappearance voice terminals. One of six different ringing patterns can be used to alert the called terminal when the calling terminal goes off-hook. This choice of ringing is made on a per-system basis and is used for both Automatic and Dial Intercom.

This feature reduces dialing time. The called party also knows who is calling.

Feature History and Development

This feature was first available on System 85 in Release 1. There have been no changes to this feature since its introduction.

USER OPERATIONS

The following are the user operating procedures for this feature.

To Initiate an Automatic Intercom Call:

- Press the appropriate AUTO ICOM button. [AUTO ICOM red status lamp lights.]
- Go off-hook. [AUTO ICOM green status lamp lights, and ringback tone is heard. At the called terminal, the AUTO ICOM green status lamp flashes, and distinctive ringing is heard. All other intercom appearances in the intercom group will have a lighted green status lamp.]

To Answer an Automatic Intercom Call:

- Press the appropriate AUTO ICOM button.
- Go off-hook. [Distinctive ringing is removed at the called terminal, and ringback tone is removed at the calling terminal.]

To Bridge Onto an Automatic Intercom Call:

- Press the appropriate MANUAL ICOM button. [MAN ICOM red status lamp lights.]
- Go off-hook.

CONSIDERATIONS

Feature Parameters

Automatic Intercom is used only within the local switch. As many as 300 intercom (Automatic, Manual, or combined) groups are allowed in the switch.

Each intercom group can include a maximum of 16 voice terminals. Only 2 of the 16 terminals can be Automatic Intercoms. The remaining 14, if assigned, must be assigned as Manual Intercoms.

AUTO ICOM Buttons

The multiappearance voice terminal provides AUTO ICOM buttons for selecting the Automatic Intercom appearances.

Button Restrictions

On a single multiappearance voice terminal, either an AUTO ICOM or a MANUAL ICOM button can be assigned to a single intercom group, but not both.

Restricted Features

Features such as Call Coverage, Hold, Hunting, Transfer, etc., cannot be used on Automatic Intercom lines.

Selectable Ringing Patterns

When administering Procedure 061, the six selectable ringing patterns are:

- 0 — Ring 1 (This is about 2 seconds of modulated ringing repeated every 5 seconds.)
- 1 — Ring 2 (This is one short ring, then a 2-second modulated ring. This pattern is repeated every 5 seconds.)
- 2 — Ring 3 (This is two short rings, then a 2-second modulated ring. This pattern is repeated every 5 seconds.)
- 3 — Ring 4 (This is one short modulated ring that is not repeated.)
- 4 — Buzz 1 (This is a 1-second unmodulated tone that is repeated every 5 seconds.)
- 5 — Buzz 2 (This is a short unmodulated tone that is not repeated.)

INTERACTIONS WITH OTHER FEATURES

The following System 85 features affect or are affected by the operation of this feature.

Bridged Call

Bridging onto an existing Automatic Intercom call is allowed. A maximum of three multiappearance voice terminals may be connected to the call at any one time. Additional parties attempting to bridge onto the connection receive reorder tone.

Extension Number Portability

The equipment location of an extension number must be removed from all intercoms, if assigned, before the extension number can be ported to another node.

Manual Signaling

When Automatic Intercom ringing is in progress, it prevents Manual Signaling.

Multiappearance Preselection and Preference

At the originating voice terminal, the Multiappearance Preselection and Preference feature cannot automatically select an intercom appearance. However, at the receiving voice terminal, the Multiappearance Preselection and Preference feature can select the intercom appearance receiving the call.

Privacy—Manual Exclusion

The Manual Exclusion feature cannot be used to prevent intercom group members from bridging onto an Automatic Intercom line.

Ringing—Ringing Cutoff

Ringing Cutoff denies all intercom ringing for the given terminal.

Tenant Services

There are no tests in Procedure 056, Word 1 to ensure that the two Automatic Intercom members of a nondial intercom group belong to the same extension partition. It is the responsibility of the system manager to ensure that intercom groups do not cross partition boundaries.

Hardware Requirements

Multiappearance voice terminals are required for this feature.

Feature Administration

Assignment of the Intercom feature is on a per-terminal basis. The customer can administer this feature using the SMT (System Management Terminal) or the TCM (Terminal Change Management) feature.

The following are the applicable MAAP and SMT procedures.

MAAP AND SMT PROCEDURES
INTERCOM—AUTOMATIC

PROCEDURE	WORD	PURPOSE	SMT
056	1	Administers intercom type and features for a voice terminal.	Yes
061	1	Specifies the six possible intercom ringing patterns.	Yes

The following are the applicable TCM path names used with the AP 16.

TCM SCREENS
INTERCOM—AUTOMATIC

PATH NAME	PURPOSE
terminal-change group intercom	Displays or prints an intercom report.
terminal-change system parameters (select the Signaling option)	Specifies intercom ringing type (see Procedure 061 for types).
terminal-change terminal buttons	Assigns the AUTO ICOM button (use ‘‘nondial intercom’’) to a voice terminal.

The following are the applicable CSM Command Paths utilizing the **admin** area of TCM or FM.

CSM SCREENS — MASKS INTERCOM — AUTOMATIC		
APPL'N	**OBJECT**	**PURPOSE**
TCM	This command will be set type: i.e., 36-button, 12-button, bct, vds, pt510, or coverage-module.	Administers intercom type and features for a voice terminal.
TCM	ringing-parameters	Administers the assignments for intercom alert rate and abbreviated/delayed alert cycles before transfer. The intercom alert signal and manual signal tone are unique alerts that enable the user to identify a call as an intercom call. The abbreviated/delayed alert cycle for transfer specifies the number of alert cycles heard at the primary appearance of an extension number before a call transfers to the secondary appearance.

INTERCOM—DIAL

DESCRIPTION

The Dial Intercom feature allows multiappearance voice terminal users to gain rapid access to 27 other multiappearance voice terminal users in the same intercom group. There is a choice of six different ringing patterns that the called party can receive when reached. This choice of ringing is made on a per-system basis, and is used for both Dial and Automatic Intercom. The selected pattern lets the called party know that someone within the intercom group is calling. This feature also reduces dialing time.

Feature History and Development

This feature was first available on System 85 in Release 1. There have been no changes to this feature since its introduction.

USER OPERATIONS

The following are the user operating procedures for this feature.

To Initiate a Dial Intercom Call:

- Press DIAL ICOM. [DIAL ICOM red status lamp lights.]
- Go off-hook. [Dial tone is heard, and every terminal in the intercom group will have a lit DIAL ICOM green status lamp.]
- Dial a 1- or 2-digit code to reach the desired party. [Dial tone is removed, and ringback tone is heard. At the called terminal, the DIAL ICOM green status lamp flashes, and ringing is heard.]

To Answer a Dial Intercom Call:

- Press DIAL ICOM. [DIAL ICOM red status lamp lights.]
- Go off-hook. [Ringing is removed. Calling and called terminal DIAL ICOM red status lamps remain lighted.] (If one of the two links is idle, all other dial intercom appearances in this dial intercom group will have a dark status lamp. If both links become busy, all dial intercom appearances in this intercom group will have a lighted status lamp.)

CONSIDERATIONS

Feature Parameters

The Dial Intercom feature can be used only within the local switch. Up to 280 Dial Intercom groups are allowed per switch. Each group can have up to 28 members.

Mixing Codes

Within an intercom group, a mixture of 1-digit and 2-digit codes is allowed. However, any number used as the first digit of a 2-digit code cannot also be used as a 1-digit code within the same intercom group. Furthermore, no more than two distinct digits can be used as the first digit of a 2-digit code. (A legal dialing arrangement would be: 0, 1, 3, 4, 6, 7, 8, 9, 20, 21, 22, 23, 24, 50, 51, 52, 53, 54, 55, and 56. This group contains 20 members using 1- and 2-digit codes.)

Dial Intercom Lamps

The multiappearance voice terminal provides DIAL ICOM buttons for the dial intercom appearances. When both Dial Intercom links are busy, the Dial Intercom status lamp is dark. When only one link is busy, only the voice terminals involved have a lit status lamp. Incoming Dial Intercom calls make the Dial Intercom status lamp flash at a fast steady rate.

Dial Intercom Links

Only two separate conversations (Dial Intercom links) may occur at the same time within a Dial Intercom group. If both Dial Intercom links are being used, a user attempting to access Dial Intercom will receive reorder tone. If a Dial Intercom voice terminal is busy, a user attempting to connect to that terminal receives a busy tone. If a user attempts to dial an unassigned or invalid Dial Intercom code, they receive intercept tone.

Bridging Dial Intercom Calls

Other Dial Intercom voice terminals cannot bridge onto an existing Dial Intercom call. Features such as Call Coverage, Hold, Hunting, Transfer, etc., cannot be used on Dial Intercom lines.

Selectable Ringing Patterns

When administering Procedure 061, the six selectable ringing patterns are:

- 0 — Ring 1 (This is about 2 seconds of modulated ringing repeated every 5 seconds.)
- 1 — Ring 2 (This is one short ring, then a 2-second modulated ring. This pattern is repeated every 5 seconds.)
- 2 — Ring 3 (This is two short rings, then a 2-second modulated ring. This pattern is repeated every 5 seconds.)
- 3 — Ring 4 (This is one short modulated ring that is not repeated.)
- 4 — Buzz 1 (This is a 1-second unmodulated tone that is repeated every 5 seconds.)
- 5 — Buzz 2 (This is a short unmodulated tone that is not repeated.)

INTERACTIONS WITH OTHER FEATURES

The following System 85 features affect or are affected by the operation of this feature.

Bridged Call

Bridging onto a Dial Intercom connection is not allowed.

Extension Number Portability

The equipment location of an extension number must be removed from all intercoms, if assigned, before the extension number can be ported to another node.

Last Extension Dialed

The Last Extension Dialed feature will not store or redial a Dial Intercom number.

Last Number Dialed

The Last Number Dialed feature will store and redial a Dial Intercom number.

Manual Signaling

When Dial Intercom ringing is in progress, it prevents Manual Signaling.

Multiappearance Preselection and Preference

At the originating voice terminal, the Multiappearance Preselection and Preference feature cannot automatically select an intercom appearance. However, at the receiving voice terminal, the Multiappearance Preselection and Preference feature can select the intercom appearance receiving the call.

Privacy—Manual Exclusion

Since bridging is denied for Dial Intercom lines, the Manual Exclusion feature does not function on Dial Intercom lines.

Ringing—Abbreviated and Delayed Ringing

This feature cannot be assigned to Dial Intercom groups.

Ringing—Ringing Cutoff

Ringing Cutoff denies all intercom ringing for the given terminal.

Tenant Services

There are no tests in Procedure 056, Word 1 to ensure that the members of a Dial Intercom group belong to the same extension partition. It is the responsibility of the system manager to ensure that intercom groups do not cross partition boundaries.

HARDWARE REQUIREMENTS

Multiappearance voice terminals are required for this feature.

FEATURE ADMINISTRATION

Assignment of the Dial Intercom feature is on a per-terminal basis. The customer can administer this feature using the SMT (System Management Terminal) or the TCM (Terminal Change Management) feature. This feature can also be administered using CSM (Centralized System Management).

The following are the applicable MAAP and SMT procedures.

MAAP AND SMT PROCEDURES — INTERCOM—DIAL			
PROCEDURE	**WORD**	**PURPOSE**	**SMT**
056	1	Administers the intercom type and features for a voice terminal.	Yes
061	1	Administers the six possible intercom alerting patterns. All the alerting patterns have visual alerting.	Yes

The following are the applicable TCM path names used with the AP 16.

TCM SCREENS — INTERCOM—DIAL	
PATH NAME	**PURPOSE**
terminal-change group intercom	Displays or prints an intercom report.
terminal-change system parameters (select the Signaling option)	Specifies intercom alerting type (see Procedure 061 for patterns).
terminal-change terminal buttons	Assigns the DIAL ICOM button to a multiappearance voice terminal.

The following are the applicable CSM Command Paths utilizing the **admin** area of TCM or FM.

CSM SCREENS — MASKS INTERCOM — DIAL		
APPL'N	**OBJECT**	**PURPOSE**
TCM	This command will be set type: i.e., 36-button, 12-button, bct, vds, pt510, or coverage-module.	Administers intercom type and features for a voice terminal.
TCM	ringing-parameters	Administers the assignments for intercom alert rate and abbreviated/delayed alert cycles before transfer. The intercom alert signal and manual signal tone are unique alerts that enable the user to identify a call as an intercom call. The abbreviated/delayed alert cycle for transfer specifies the number of alert cycles heard at the primary appearance of an extension number before a call transfers to the secondary appearance.

INTERCOM—MANUAL

DESCRIPTION

The Manual Intercom feature allows a multiappearance terminal user to access other multiappearance terminals assigned to the same intercom group. At any one time, up to three users in the group can be connected to a single call.

A manual intercom signal is heard at the called party's terminal each time the caller presses the SIGNAL button. The manual intercom signal is one short beep.

This feature is useful when involved in a 2-way connection and it is desirable to have a third party, like a secretary, bridge on to the conversation.

Feature History and Development

This feature was first available on System 85 in Release 1. There have been no changes to this feature since its introduction.

USER OPERATIONS

The following are the user operating procedures for this feature.

To Initiate a Manual Intercom Call:

- Press MANUAL ICOM. [MANUAL ICOM red status lamp lights.]
- Go off-hook. [MANUAL ICOM green status lamp lights. All other intercom buttons in the group have a lit green status lamp.]
- Press the appropriate SIGNAL button. [SIGNAL green status lamp lights while the button is pressed. The called terminal receives one short beep each time the SIGNAL button is pressed.]

To Answer a Manual Intercom Call:

- When the beep is heard, go off-hook.
- Press MANUAL ICOM. [MANUAL ICOM red status lamp lights.]

To Bridge Onto a Manual Intercom Call:

- Go off-hook.
- Press MANUAL ICOM. [MANUAL ICOM red status lamp lights.]

CONSIDERATIONS

Feature Parameters

As many as 300 intercom (Automatic, Manual, or combined) groups are allowed on the switch. More than one intercom group may appear on a multiappearance terminal. A separate button is required for each intercom group assigned to the terminal.

Each intercom group can include a maximum of 16 terminals. A separate Manual Signaling button is required to alert each terminal.

Button Restriction

On a multiappearance voice terminal, either a MANUAL ICOM or an AUTO ICOM button can be assigned to an intercom group, but not both.

Assigning Manual Signaling

Manual Signaling should be assigned to multiappearance terminals that have Manual Intercom assigned.

Features Used With Manual Intercom

Manual Signaling and Bridged Call are the only voice terminal features that can be used with Intercom—Manual. All others (e.g., Call Coverage, Hold, Hunting, etc.) cannot be used.

INTERACTIONS WITH OTHER FEATURES

The following System 85 features affect or are affected by the operation of this feature.

Bridged Call

Bridging onto an existing Manual Intercom call is permitted. A maximum of three multiappearance voice terminals may be connected to a Manual Intercom call at any one time. Additional calls trying to bridge onto the call receive reorder tone.

Extension Number Portability

The equipment location of an extension number must be removed from all intercoms, if assigned, before the extension number can be ported to another node.

Multiappearance Preselection and Preference

At the originating voice terminal, the Multiappearance Preselection and Preference feature cannot automatically select an intercom appearance. However, at the receiving voice terminal, the Multiappearance Preselection and Preference feature can select the intercom appearance receiving the call.

Privacy—Manual Exclusion

Privacy—Manual Exclusion cannot be used to prevent an intercom group member from bridging onto an intercom call.

Ringing—Ringing Cutoff

Ringing Cutoff denies Manual Intercom ringing for the given terminal.

Tenant Services

There are no tests in Procedure 056, Word 1 to ensure that the Manual Intercom members of a nondial intercom group belong to the same extension partition. It is the responsibility of the system manager to ensure that intercom groups do not cross partition boundaries.

HARDWARE REQUIREMENTS

Multiappearance voice terminals are required for this feature.

FEATURE ADMINISTRATION

Assignment of the Manual Intercom feature is on a per-terminal basis. The customer can fully administer this feature using the SMT (System Management Terminal) or the TCM (Terminal Change Management) feature. This feature can also be administered using CSM (Centralized System Management).

The following are the applicable MAAP and SMT procedures.

MAAP AND SMT PROCEDURES — INTERCOM—MANUAL			
PROCEDURE	**WORD**	**PURPOSE**	**SMT**
053	1	Administers a signaling and a signaled terminal for Manual Signaling.	Yes
056	1	Administers the intercom type (nondial). Also, enter dashes in Field 10 and 0 (for Manual Signaling) in Field 11. This procedure also displays the number of terminals in the intercom group.	Yes

The following are the applicable TCM path names used with the AP 16.

TCM SCREENS — INTERCOM—MANUAL	
PATH NAME	**PURPOSE**
terminal-change group intercom	Displays or prints an intercom report.
terminal-change terminal buttons	Assigns the MAN ICOM button (use ‘‘nondial intercom’’) to a voice terminal.

The following is the applicable CSM Command Path utilizing the **admin** area of TCM or FM.

CSM SCREEN — MASK INTERCOM — MANUAL		
APPL’N	**OBJECT**	**PURPOSE**
TCM	This command will be set type: i.e., 36-button, 12-button, bct, vds, idt, pt510, feature-module, or coverage-module.	Administers a signaling and a signaled terminal for Manual Signaling. Assigns the device type and the member number. This command also administers the intercom type and displays the number of terminals in the intercom group.

INTEREXCHANGE CARRIER ACCESS

DESCRIPTION

The IXC (Interexchange Carrier) Access feature allows customers to specify the particular interexchange carrier vendor (e.g., AT&T, MCI, Sprint, etc.) to be used for calls to a given dialing destination. The IXC feature uses the capabilities of AAR (Automatic Alternate Routing) and ARS (Automatic Route Selection) by routing calls to administratively selected long distance service venders. This feature is transparent to the calling voice terminal user.

Initiating Calls

The ARS feature routes calls over the most preferred off-network route. The user need only dial the ARS dial access code followed by the public network number. The switch chooses the outgoing trunk group and uses subnetwork trunking to make any modifications to the dialed number and then sends the digits necessary to complete the call.

The AAR feature routes calls over the customer's private network. AAR also uses subnetwork trunking to provide digit modification and digit sending of the called number over the chosen route. The AAR feature has Automatic Overflow to the Direct Distance Dialing (DDD) network or the common carriers equivalent when no private routes are available. The called number is modified into a public network number.

Receiving Calls

If the destination switch has Direct Inward Dialing (DID) capability, the call is routed directly to the voice terminal. Otherwise the public network number is the Listed Directory Number (LDN) of that switch, and an attendant at the destination switch must complete the call to the desired voice terminal.

For a customer without DID who wants an overflowed network call to terminate directly to the called terminal, Remote Access might be used. With proper digit manipulation, the called number could be altered into a number acceptable to an incoming Remote Access Trunk of the switch.

Feature History and Development

This feature was first available for System 85 in Release 2, Version 3.

USER OPERATIONS

The following is the user operating procedure for this feature.

To Place a Call to a Given Dialing Destination Using an OCC:

- Go off-hook. [Dial tone]
- Dial the ARS/AAR feature access code. [Second dial tone]
- Dial the number you want. [Ringback tone]

CONSIDERATIONS

Real Time Impact

There is no real time impact from a user's view point in using IXC. However, increasing the digit sending capacity for subnetwork trunking requires the holding of an Originating Register for a longer period of time for those calls using the extra digits.

INTERACTIONS WITH OTHER FEATURES

AAR (Automatic Alternate Routing) and ARS (Alternate Route Selection)

The AAR and ARS features are used to implement the IXC selection automatically.

ISDN (Integrated Services Digital Network)/PRI (Primary Rate Interface)

The IXC Access feature works normally with the ISDN/PRI feature. Assuming the selected carrier provides ISDN service, ISDN calls will route normally. However, if the selected carrier does not provide ISDN service and the COS of the call indicates **ISDN facilities are required**, the call cannot be completed.

Last Number Dialed

Redial by the LND (Last Number Dialed) feature utilizes all of the AAR/ARS routing digits including IXC Access as though the call were manually dialed. The LND feature will also store and redial the AAR/ARS access code.

RESTRICTING FEATURE USE

The IXC Access feature is used to provide access to toll facilities. An individual voice terminal can be restricted from access to this feature by the Restriction features that restrict toll access. They can also be restricted through the use of the Facilities Restriction Level feature.

HARDWARE REQUIREMENTS

None.

FEATURE ADMINISTRATION

Assignment of the IXC feature is on a per-switch basis. The customer can partially administer this feature using the SMT (System Management Terminal) or the FM (Facilities Management) feature. This feature can also be administered using CSM (Centralized System Management).

The following are the applicable MAAP and SMT procedures.

MAAP AND SMT PROCEDURES — INTEREXCHANGE CARRIER ACCESS

PROCEDURE	WORD	PURPOSE	SMT
309	1	Administers routing pattern parameters for ARS including: trunk group number, FRL, warning tone, home NPA at distant end of route, dial 1 for toll requirements, toll table index, number of beginning digits deleted, dc signal ignore, and IXC Identifier. To forward calls off-net, all three ARS plans must be defined using this procedure.	Yes
309	3	Defines the four digit groupings and dialing format (touch-tone or rotary).	Yes
309	4	Defines the inserted digits a trunk group in an ARS pattern requires for subnetwork trunking.	Yes
321	1	Administers routing pattern parameters for AAR including: trunk group number, FRL, warning tone, off net (to a DDD or IDDD location), number of beginning digits deleted, dc signal ignore, IXC identifier, and whether network has 0XXX extension numbers or not.	Yes
321	2	Defines the digit grouping and dialing format (touch-tone or rotary) for a trunk group in an AAR pattern that uses subnetwork trunking.	Yes
321	3	Defines the digits to insert for a trunk group in an AAR pattern that uses subnetwork trunking.	Yes

The following are the applicable FM path names used with the AP 16.

FM SCREENS — INTEREXCHANGE CARRIER ACCESS	
PATH NAME	**PURPOSE**
facilities-mgmt routing route-selection patterns (for ARS)	Displays and changes attributes associated with the trunk groups that make up an ARS pattern.
facilities-mgmt routing alternate-routing patterns (for AAR)	Displays and changes attributes associated with an AAR pattern.

The following are the applicable CSM Command Paths utilizing the **admin** area of TCM or FM.

CSM SCREENS — MASKS INTEREXCHANGE CARRIER ACCESS		
APPL'N	**OBJECT**	**PURPOSE**
FM	ars-pattern	Adds, changes, displays, or removes ARS patterns and the preferences associated with the pattern. These parameters include: trunk group number, FRL, warning tone, home NPA at distant end of route, dial 1 for toll requirements, toll table index, number of beginning digits deleted, dc signal ignore, and IXC Identifier. To forward calls off-net, all three ARS time-of-day plans must be specified for each pattern. This command also defines the four digit groupings and dialing format (touch-tone or rotary), and the inserted digits that a trunk group in an ARS pattern requires for subnetwork trunking.
FM	aar-pattern	Adds, changes, displays, or removes AAR patterns and the preferences associated with the pattern. These parameters include: trunk group number, FRL, warning tone, off-net (to a DDD or IDDD location), number of beginning digits deleted, dc signal ignore, IXC identifier, and whether network has 0XXX extension numbers or not. This command also defines the digit grouping, dialing format, and digits to insert (touch-tone or rotary) for a trunk group in an AAR pattern that uses subnetwork trunking.

INTERPARTITION ACCESS

DESCRIPTION

The IPA (Interpartition Access) feature provides greater calling flexibility in a partitioned System 85. Using IPA, a voice terminal user in one extension partition can call a voice terminal user in another extension partition, provided *both* partitions belong to the same partition group.

Attendant and Trunk Group Access

In the Tenant Services environment with IPA, several partitioning relationships remain unchanged. These relationships include:

- Extension partitions and attendant partitions
- Extension partitions and trunk groups
- Attendant partitions and trunks groups.

In this way, most of the partitioning can be preserved while extension calling across partition boundaries is allowed.

Full Interpartition Access

In some locations, the PUC (Public Utilities Commission) allows Interpartition Access for an entire partitioned switch. When this is allowed, a savings in public-network access trunks can be derived.

Configured in this way, the partitioned switch could have as many as 1000 extension partitions and only *one* partition group. Voice terminal users on this switch can call any other user within the switch (regardless of extension partition). Meanwhile, each extension partition would still have separate (or shared) trunk groups and attendants.

Attendant Direct (Dividing Attendant Responsibilities)

Other System 85s can be configured to provide an Attendant Direct configuration. This configuration provides a functional division of the attendant workforce.

Perhaps a company has three major divisions (e.g., sales, service, and production) in one location, and an attendant is desired for each division. This company's voice terminals can be subdivided into three

extension partitions. Each extension partition is assigned to a different attendant partition. And, each attendant partition contains a different attendant. Also, three LDNs (Listed Directory Numbers) complete calls to the three separate attendant partitions.

In effect, this company's switch has been subdivided into three functional components. However, since sales, service, and production also share interests, the three extension partitions are also allowed to freely communicate by assigning these partitions to a common partition group.

Hybrid IPA Configuration

The ''hybrid'' IPA configuration combines the two previous configurations. Under this scenario, a System 85 is fully partitioned, but one (or several) tenants want to have the Attendant Direct functionality, or several tenants share a community of interest. Some tenants could have an Attendant Direct configuration while others could choose more flexible extension calling.

> **NOTE:** The IPA (Interpartition Access) feature is used in conjunction with the Tenant Services feature to allow calling between extension partitions. Refer to the Tenant Services section of this manual for a description of the Tenant Services feature.

Table 67-1 shows the ways that extension partitions can be assigned to partition groups. Besides the voice terminal in Extension Partition 0, this configuration contains four tenants.

- The extension in Extension Partition 0 can call or be called by any extension in the switch.
- Tenant A's extensions belong to Extension Partition 1, and Tenant B's Extensions belong to Extension Partition 2. However, both extension partitions belong to Partition Group 1. Therefore, an extension in either of these extension partitions can call or be called by any other extension in the same partition group.
- Tenant C's extensions belong to Extension Partition 3, and Extension Partition 3 is the only partition in Partition Group 2. This relationship retains strict partitioning. An extension in Extension Partition 3 can call or be called by any other extension in the same extension partition.
- The configuration for Tenant D is an example of how Attendant Direct can be administered. Tenant D's extensions belong to Extension Partitions 4 and 5. However, all of Tenant D's extensions belong to Partition Group 3. Although Extension Partitions 4 and 5 can have separate attendants, extensions in both partitions can still call each other because these extensions belong to the same partition group.

Table 67-1. Extension Partitions and Partition Groups

Tenant	Extension Number	Extension Partition	Partition Group
	1000	0	—
A	2001	1	1
A	2002	1	1
A	2003	1	1
B	3001	2	1
B	3002	2	1
C	4001	3	2
C	4002	3	2
D	5001	4	3
D	5002	4	3
D	5003	5	3
D	5004	5	3

Feature History and Development

This feature is first available for System 85 in Release 2, Version 4.

USER OPERATIONS

The Interpartition Access feature has no special user operations. To call a voice terminal user within the partition group, the calling party dials an extension number in the usual manner.

CONSIDERATIONS

Switch Capacities

As many as 500 partition groups can be provided in a partitioned System 85.

Each extension partition can only be assigned to one partition group.

As many as 1000 extension partitions can be assigned to the same partition group.

Legal Considerations

Laws governing the use of Interpartition Access vary in different locations and are subject to change. It is the responsibility of the System Manager to understand and comply with the applicable regulations.

INTERACTIONS WITH OTHER FEATURES

The following System 85 features affect or are affected by the operation of IPA. When IPA is assigned, these interactions take precedence over the corresponding Tenant Services interactions. However, the Tenant Services feature impacts the operation of many features that are not included in this list. For these features, the Tenant Services interactions will apply.

Abbreviated Dialing

Abbreviated Dialing list items are not checked for legality at the time they are entered. Illegal list items are accepted into the list, but calls to these illegal numbers are denied when the digits are outpulsed by the switch. When a user attempts to use Abbreviated Dialing to place a call over another partition's trunk group or to an extension in another partition group, the switch returns intercept treatment to the calling party.

AUDIX (Audio Information Exchange)

A partitioned System 85 is not aware of AUDIX user permissions. When a voice terminal user dials the AUDIX extension number, the switch follows the usual rules for terminal-to-terminal calling to reach the AUDIX system. Therefore, the AUDIX extension number must either belong to the user's partition group or to Extension Partition 0.

After reaching the AUDIX system, messages can be left for, created by, or retrieved by any subscriber (regardless of the partition group the subscriber belongs to).

The Call Transfer To (and From) AUDIX functions are partitioned. A voice terminal user (in an extension partition other than Extension Partition 0) can transfer these calls to extension numbers in the same partition group or to extensions in Extension Partition 0. When the user tries to transfer these calls to any other partition group (using an extension number), the switch returns intercept treatment to the transferring party.

A voice terminal user in Extension Partition 0 is allowed to transfer these calls (using an extension number) to any voice terminal in the switch.

Authorization Codes

For switch security, strict partitioning is applied to Authorization Codes. Authorization Codes can only be assigned to an extension partition (not a partition group), and these codes cannot be shared by the extensions in a partition group.

ACD (Automatic Call Distribution)

To protect the privacy of ACD agents, service observing is only allowed from within the same extension partition or Extension Partition 0. An observer in a different extension partition (but the same partition group) as an ACD agent cannot observe the agent using service observing.

To protect the privacy of ACD agents, agent override is only allowed from within the same extension partition or Extension Partition 0. An observer in a different extension partition (but the same partition group) as an ACD agent cannot observe the agent using agent override.

Automatic Callback

A voice terminal user (in a partition other than Extension Partition 0) is allowed to activate Automatic Callback toward voice terminals in the same partition group or in Extension Partition 0. When the user tries to activate Automatic Callback toward a voice terminal in any other partition group, the switch returns intercept treatment.

A voice terminal user in Extension Partition 0 is allowed to activate Automatic Callback toward any voice terminal in the switch.

Call Forwarding—Busy and Don't Answer

A voice terminal user (in a partition other than Extension Partition 0) is allowed to forward calls to another voice terminal in the same partition group or in Extension Partition 0. The switch will return intercept treatment to a user attempting to forward calls to any other partition group.

Call Forwarding—Don't Answer

A voice terminal user (in a partition other than Extension Partition 0) is allowed to forward calls to another voice terminal in the same partition group or in Extension Partition 0. The switch will return intercept treatment to a user attempting to forward calls to any other partition group.

Call Forwarding—Follow Me

A voice terminal user (in a partition other than Extension Partition 0) is allowed to forward calls to another voice terminal in the same partition group or in Extension Partition 0. The switch will return intercept treatment to a user attempting to forward calls to any other partition group.

Call Pickup

There are no tests in Procedure 000, Word 2 to ensure that a Call Pickup group is only assigned to extensions residing in the same partition group. The system manager should ensure that every member of each Call Pickup group belongs to the same partition group.

When Call Pickup groups have been assigned to overlap partition-group boundaries, the call-processing software provides partitioning for the feature. If a Call Pickup group member in one partition group tries to pickup a call to another group member residing in a different partition group, intercept treatment is returned by the switch.

Call Vectoring

A voice terminal user (in a partition other than Extension Partition 0 is allowed to call (using an extension number) a VDN assigned to an extension partition in the same partition group or assigned to Extension Partition 0. If the user tries to call a VDN assigned to another group's extension partition, the switch will return intercept treatment.

The ''route to'' vector command can route calls to an extension partition in the VDN's partition group or to Extension Partition 0. If a ''route to'' command is programmed to route calls to another extension partition, the switch will treat a final effective ''route to'' step as a ''stop'' step. Otherwise, the ''route to'' step is ignored, and vector processing continues with the next sequential step.

Call Waiting

A partitioned System 85 allows Call Waiting and provides 1-burst tone for terminal-to-terminal calls inside a partition group. The switch also allows Call Waiting and provides 1-burst tone for terminal-to-terminal calls between an extension partition and Extension Partition 0.

Otherwise, terminal-to-terminal calls are not allowed to cross partition-group boundaries. In order to call a voice terminal in any other partition group, a voice terminal user must dial the appropriate 7-digit number which routes the call over a CO (Central Office) trunk. When this is done, the switch allows Call Waiting and provides 2-burst tone for the called voice terminal.

The switch allows Call Waiting for incoming calls from the public network, and provides 2-burst tone for these calls.

Conference—Three Party

A voice terminal user (in a partition other than Extension Partition 0) is allowed to establish 3-party conferences that include participants that the user is otherwise allowed to call. If the user tries to add a conferee to the conference by dialing an extension number in another partition group, the switch returns intercept treatment to the user.

A voice terminal user in Extension Partition 0 is allowed to establish 3-party conferences with any voice terminal or over any trunk in the switch.

Hot Line

Hot Line numbers are not checked for legality at the time they are entered. Illegal Hot Line numbers are denied when the digits are outpulsed by the switch. When a user attempts to place a Hot Line call over another partition's trunk group or to an extension in another partition group, the switch returns intercept treatment to the calling party.

Last Number Dialed

A voice terminal user (in an extension other than Extension Partition 0) can use the Last Number Dialed button to redial calls within the user's partition group, to Extension Partition 0, to the associated attendant partition, to Attendant Partition 0, or over an associated trunk group. When the user tries to use this button to redial an illegal call, the switch returns intercept treatment to the calling party.

A voice terminal user in Extension Partition 0 can use the Last Number Dialed button to redial calls to any extension partition, to any attendant partition, or over any trunk group in the switch.

Leave Word Calling

Leave Word Calling messages can only be left for an extension in the same partition group or for an extension in Extension Partition 0. When Leave Word Calling is blocked by partitioning, the switch returns intercept treatment to the calling party.

Demand Print

The Demand Print function of the Leave Word Calling feature is also partitioned as part of the Tenant Services feature.

When a demand printout is requested from a voice terminal (in a partition other than Extension Partition 0), System 85 software checks to determine whether the extension used to retrieve the messages and the extension for which the messages were left are in the same partition group. If not, the switch returns intercept treatment to the party requesting the demand printout.

From a voice terminal in Extension Partition 0, a demand printout can be requested for messages left to any extension in the switch.

Given the above operation, there are two approaches to implementing the Demand Print function on a partitioned switch. One approach is to provide a voice terminal and an associated printer for each partition group. The other approach is to provide a voice terminal and an associated printer to Extension Partition 0, and share this facility with all of the partition groups.

NOTE: Access to a printer cannot be shared by several partition groups and denied to the other partition groups.

Override

A voice terminal user (in a partition other than Extension Partition 0) is allowed to place Override calls to extensions in the same partition group or in Extension Partition 0. When the user tries to place an Override call to an extension in any other partition group, the switch returns intercept treatment to the calling party.

A voice terminal user in Extension Partition 0 can place an Override call to any other extension in the switch.

Priority Calling

A voice terminal user (in an extension partition other than Extension Partition 0) is allowed to place priority calls within the user's partition group or to Extension Partition 0. When the user tries to activate Priority Calling toward an extension in any other partition group, the switch returns intercept treatment to the calling party.

A voice terminal user in Extension Partition 0 can place a priority call to any other extension in the switch.

Whenever Priority Calling is allowed, the switch provides 3-burst ringing or 3-burst waiting tone for the called voice terminal.

Transfer

A voice terminal user (in an extension partition other than Extension Partition 0) can transfer calls to extension numbers within the same partition group or to extensions in Extension Partition 0. When the user tries to transfer a call to any other partition group (using an extension number), the switch returns intercept treatment to the transferring party.

A voice terminal user in Extension Partition 0 is allowed to transfer calls (using an extension number) to any voice terminal in the switch.

HARDWARE REQUIREMENTS

None.

FEATURE ADMINISTRATION

Assignment of the Interpartition Access feature is on a per-extension partition basis. The customer can administer this feature using the SMT (System Management Terminal).

The following are the applicable MAAP and SMT procedures.

MAAP AND SMT PROCEDURES — INTERPARTITION CALLING			
PROCEDURE	**WORD**	**PURPOSE**	**SMT**
270	1	Assigns an extension partition to a partition group.	Yes

The following is the applicable CSM Command Path utilizing the **admin** area of TCM or FM.

CSM SCREEN — MASK INTERPARTITION ACCESS		
APPL'N	**OBJECT**	**PURPOSE**
TCM	attd-extension-partition	Associates an attendant partition with an extension partition.

LAST EXTENSION DIALED

DESCRIPTION

This feature automatically redials the last 3-, 4-, or 5-digit extension number dialed from a multiappearance voice terminal. This function is useful when redialing a busy extension. Also, by freeing the user from repeatedly locating an extension number in the directory, the feature saves time and effort for the user.

Feature History and Development

This feature was first available for System 85 in Release 1. Five-digit extension numbers were made available to System 85 in Release 2, Version 1. When this was done, the Last Extension Dialed feature was made compatible with 5-digit extensions.

The Last Extension Dialed feature was replaced and enhanced by the Last Number Dialed feature in the Issue 1.2 software of Release 2, Version 3.

USER OPERATIONS

The following is the user operating procedure for this feature.

To Repeat the Last Extension Dialed:

- Go off-hook. [Dial tone]
- Press LAST EXT DIALED. [Ringback tone]

CONSIDERATIONS

Access Codes

The Last Extension Dialed feature ignores feature-button presses and access codes dialed using Abbreviated Dialing buttons. Instead, the switch redials the last extension number dialed before these operations were performed.

Manually dialed access codes are not redialed. This feature redials only extension numbers.

Last Extension Dialed but No Effect

When a hard processor swap or a power failure occurs, the last extension number dialed from each

voice terminal is lost from memory. Therefore, pressing the LAST EXT DIALED button after a hard swap or a tape reload (to initialize the System 85) and before dialing another extension number has no effect.

The Last Extension Dialed feature operates normally during a soft processor swap.

INTERACTIONS WITH OTHER FEATURES

The following System 85 features affect or are affected by the operation of this feature.

AUDIX (Audio Information Exchange)

The Last Extension Dialed feature will redial an associated extension number to access the AUDIX system.

Automatic Callback

Automatic Callback can be used in conjunction with Last Extension Dialed. This is useful when activation of the Automatic Callback feature toward the last extension dialed is desired. (Dial the Automatic Callback DAC or press the feature button before pressing the LXD feature button.)

Bridged Call

The extension number that the Last Extension Dialed feature stores and redials is kept on a per-equipment location basis. Therefore, even though a voice terminal user shares an appearance with another user, the stored extension number cannot be overwritten by a user sharing the appearance.

Call Forwarding—Busy and Don’t Answer

Call Forwarding can be used in conjunction with Last Extension Dialed. This is useful when activation of the Call Forwarding—Busy and Don’t Answer feature toward the last extension dialed is desired. (Dial the Call Forwarding—Busy and Don’t Answer DAC or press the feature button before pressing the LXD feature button.)

Call Forwarding—Don’t Answer

Call Forwarding can be used in conjunction with Last Extension Dialed. This is useful when activation of the Call Forwarding—Don’t Answer feature toward the last extension dialed is desired. (Dial the Call Forwarding—Don’t Answer DAC or press the feature button before pressing the LXD feature button.)

Call Forwarding—Follow Me

Call Forwarding can be used in conjunction with Last Extension Dialed. This is useful when activation of the Call Forwarding—Follow Me Answer feature toward the last extension dialed is desired. (Dial the Call Forwarding—Follow Me DAC or press the feature button before pressing the LXD feature button.)

Data Communications Access

The Last Extension Dialed feature cannot be used to redial calls to Data Communications Access trunk groups that use extension number steering.

Display—Voice Terminal

When using the Last Extension Dialed feature to place a call, the called extension appears on the display unit. If the names data base is loaded for the called extension, the associated name immediately replaces the number on the display.

Intercom-Dial

The Last Extension Dialed feature will not redial a Dial Intercom number.

Off-Premises Terminal

Calls using the Multidigit Steering feature cannot use the Last Extension Dialed feature (this includes calls directed to a trunk port off-premises terminal or to a Data Communications Access port).

HARDWARE REQUIREMENTS

Multiappearance voice terminals are required for this feature.

FEATURE ADMINISTRATION

Assignment of the Last Extension Dialed feature is on a per-voice terminal basis. The customer can administer this feature using the SMT (System Management Terminal) or the TCM (Terminal Change Management) feature. The Last Extension Dialed feature can also be administered using CSM (Centralized System Management).

The following is the applicable MAAP and SMT procedure.

MAAP AND SMT PROCEDURE — LAST EXTENSION DIALED			
PROCEDURE	**WORD**	**PURPOSE**	**SMT**
054	2	Assigns the LAST EXT DIALED button to a voice terminal. The applicable encode is as follows: 1 Last Extension Dialed.	Yes

The following is the applicable TCM path name used with the AP 16.

TCM SCREEN — LAST EXTENSION DIALED	
PATH NAME	**PURPOSE**
terminal-change terminal buttons	Assigns the LAST EXT DIALED button to a voice terminal.

The following is the applicable CSM Command Path utilizing the **admin** area of TCM or FM.

CSM SCREEN — MASK LAST EXTENSION DIALED		
APPL'N	**OBJECT**	**PURPOSE**
TCM	This command will be set type: i.e., 36-button, 12-button, bct, data-module, feature-module, coverage-module, or vds.	Administers the LAST EXT DIALED button to a voice terminal.

LAST NUMBER DIALED

DESCRIPTION

This feature enables a voice terminal user to easily redial the last internal or external call. This function is primarily used for (one button) redialing a busy number. It also frees the user from repeatedly locating telephone numbers in the directory.

The LND (Last Number Dialed) feature is usable in all cases the LXD (Last Extension Dialed) button was used, and also provides additional functionality.

Dialed Number Storage

The LND feature uses a register to record manually dialed digits. Even after cut-through, the LND storage register continues to record dialed digits until the 10-second interdigital time-out occurs. Any numbers that are not dialed before the 10-second time-out, are not recorded in LND memory. Thus, if the complete phone number is not dialed before the 10-second time-out, and the LND feature is attempted, the number redialed is either incomplete (results in a time-out) or invalid (returns intercept tone).

Feature History and Development

This System 85 feature was first available in the Issue 1.2 software of Release 2, Version 3. The Last Number Dialed feature replaces and enhances the Last Extension Dialed feature.

USER OPERATIONS

The following are the user operating procedures for this feature.

To Repeat the Last Number Dialed:

- Go off-hook. [Dial tone]
- Press the LND feature button or dial the LND dial access code. [Ringback tone]

To Review the Last Number Dialed on a Display Voice Terminal:

- Remain on-hook.
- Press the LND feature button. [Display shows the LND number.]

CONSIDERATIONS

Maximum Digit Storage

The LND feature can store a maximum of 20 manually dialed digits.

Feature DACs (Dial Access Codes)

If Feature DAC originated calls are made, only the digits following the second dial tone are stored. Thus, if the redial function is desired, the DAC would have to be re-entered first.

Attendant Console

The LND feature cannot be assigned to an attendant console. However, calls placed to an attendant console from a voice terminal (that has LND capability) are recorded by the LND.

Advanced Private Line Termination

The LND feature can be used to redial outward network calls. If a distant network authorization code was dialed as part of the destination address during initial call setup, the number of dialed digits cannot exceed 20, including the network authorization code.

Redial Delay Timer

The administrable Redial Delay Timer provides a timing sequence between the trunk access code and the outpulsing of the destination number. This delay ensures that the distant switch is ready to receive the destination number. Once the trunk is seized by the distant switch and second dial tone is heard, *cut-through* is established.

AUDIX

The LND feature redials calls to an associated extension number or VDN (vector directory number) of an AUDIX system. However, the LND feature does not redial the AUDIX user's extension number, password, or the previously dialed digits to access the voiced AUDIX menus.

Shared Appearances

The LND feature is assigned on a per-terminal basis. This ensures terminal users who share appearances that their LND memory will not be overwritten.

Last Number Dialed but No Effect

When a hard processor swap or a power failure occurs, the last number dialed from each voice terminal is lost from memory. Therefore, pressing the LND button after a hard swap or a tape reload (to initialize the System 85) and before dialing another number has no effect.

The Last Number Dialed feature operates normally during a soft processor swap.

The LND feature can be used to store and redial the following:

- External CO (Central Office), tie trunk, AAR/ARS, or DCS (Distributed Communication Service) calls
- The destination part of a feature access call (digits following the second dial tone)
- Public-network destination for Call Forwarding-Off Net
- Station-to-attendant calls
- Station-to-station calls
- Trunk-group access codes.

The LND feature will not store or redial the following:

- AUDIX control sequences.
- Authorization Codes.
- Feature dial access codes (the destination portion will be saved). The feature dial access codes could destroy valid destination numbers the user wishes to retain.
- Digits dialed after full cut-through (after the 10-second interdigital time-out) or after dialing the ‘‘#’’ end of dialing digit.
- Addressing received over a Remote Access facility.
- SMDR Account Codes.
- Keyboard Dialing digits.
- Trunk-test dial sequences.

INTERACTIONS WITH OTHER FEATURES

General

Except for the LND capability of redialing external calls, the LND feature interactions are similar to the LXD feature interactions. For many features' activations, only the destination number following the second dial tone is stored. (The initial feature access code will not be stored.) However, the LND feature will completely redial ARS calls, AAR calls, trunk-group access calls, and Precedence Calling calls.

AAR/ARS

Redial by LND utilizes all of the AAR/ARS routing digits including IXC (Interexchange Carrier) Access as though the call was manually dialed. The LND feature will also store and redial trunk and AAR/ARS access codes.

For switch security, the LND feature does not store or redial Authorization Codes.

Abbreviated Dialing

The LND feature does not store and redial the digits stored behind an Automatic Dialing button. Instead, the previous manually dialed digits are stored. The Automatic Dialing call can be redialed by pressing the Automatic Dialing button again.

The LND feature does not store and redial Abbreviated Dialing list-access calls. If a voice terminal user presses the List Access button or dials a List-Access code, the subsequently dialed digits are ignored by the LND feature. Instead, the LND feature will redial the previous manually dialed digits.

The LND feature can be used in conjunction with the Abbreviated Dialing feature. For example, a user could manually dial a trunk-group access code and then press an Automatic Dialing button to call a public-network telephone. If the user receives busy tone, this call can be retried by pressing the LND button and then pressing the Automatic Dialing button. However, when the LND feature is used in conjunction with Abbreviated Dialing, the LND feature only stores and redials the digits that *precede* the Abbreviated Dialing access.

ACD (Automatic Call Distribution)

The LND (Last Number Dialed) feature stores and redials calls to an associated extension number of an ACD split.

ACD agents can use the LND feature to minimize redialing calls to other ACD agents, to other departments, or to other locations outside the switch.

Since the ASSIST button is an Automatic Dialing button, the LND feature does not redial assistance calls to the split supervisor. Instead, the LND feature will redial the last digits that were manually dialed before the assistance call.

AUDIX

The LND feature can be used to redial a call to an AUDIX system (associated extension number or VDN). Only the AUDIX extension number is stored and redialed.

Automatic Callback

Automatic Callback can be used in conjunction with LND. This is useful when activation of the Automatic Callback feature toward the last number dialed is desired. (Dial the Automatic Callback DAC or press the feature button before pressing the LND feature button.)

Call Forwarding—Busy and Don’t Answer

Call Forwarding can be used in conjunction with Last Number Dialed. This is useful when activation of the Call Forwarding—Busy and Don’t Answer feature toward the last number dialed is desired. (Dial the Call Forwarding—Busy and Don’t Answer DAC or press the feature button before pressing the LND feature button.)

Call Forwarding—Don’t Answer

Call Forwarding can be used in conjunction with Last Number Dialed. This is useful when activation of the Call Forwarding—Don’t Answer feature toward the last number dialed is desired. (Dial the Call Forwarding—Don’t Answer DAC or press the feature button before pressing the LND feature button.)

Call Forwarding—Follow Me

Call Forwarding can be used in conjunction with Last Number Dialed. This is useful when activation of the Call Forwarding—Follow Me Answer feature toward the last number dialed is desired. (Dial the Call Forwarding—Follow Me DAC or press the feature button before pressing the LND feature button.)

Data Call Setup

The LND feature does not redial keyboard dialing sequences because these sequences use Abbreviated Dialing to outpulse the digits.

DCA (Data Communications Access)

The LND feature completely stores and redials DCA calls to a host computer.

Display—Voice Terminal

When using the Last Number Dialed feature to place a call, the called number appears on the display unit. If the names data base is loaded for a called extension, the associated name immediately replaces the number on the display.

If a user presses the LND button while the voice terminal is on-hook, the display shows the stored number for the button as ‘‘LND=stored number.’’

Digital Service (DS1) Interface

The LND feature completely stores and redials the digits dialed during a DS1 call. The LND feature stores the DS1 access code and the following destination number.

Extension Number Portability

The LND feature stores and redials 5-digit extension numbers dialed to voice terminals in a portability subnetwork.

Hold

The LND feature operates while a call is on ‘‘hard hold’’ (Call Hold or Multifunction Hold) or ‘‘soft hold’’ (Conference—3-Party/Transfer). The number of the last call (the call placed after the previous call was put on hold) is stored in LND memory.

HCA (Host Computer Access)

The LND feature completely stores and redials HCA calls to a host computer.

Intercom—Dial

The LND feature stores and redials intercom numbers dialed for an Intercom—Dial call.

IPA (Interpartition Access)

A voice terminal user (in an extension other than Extension Partition 0) can use the Last Number Dialed button to redial calls within the user’s partition group, to Extension Partition 0, to the associated attendant partition, to Attendant Partition 0, or over an associated trunk group. When the user tries to use this button to redial an illegal call, the switch returns intercept treatment to the calling party.

A voice terminal user in Extension Partition 0 can use the Last Number Dialed button to redial calls to any extension partition, to any attendant partition, or over any trunk group in the switch.

ISDN (Integrated Services Digital Network)

The LND feature stores and redials the digits dialed during an ISDN call.

LWC (Leave Word Calling)

On activation of LWC, the extension dialed after hearing the second dial tone is stored in LND memory.

Override

On activation of Override, the extension dialed after hearing the second dial tone is stored in LND memory.

Personal CO Lines

The Last Number Dialed feature can be used to redial calls over Personal CO Lines that are administered as ‘‘rotary out.’’

The Last Number Dialed feature cannot be used to redial calls over Personal CO Lines that are administered as ‘‘touch-tone out.’’ In this case, the serving CO scans Personal CO lines to detect an off-hook signal. After the CO recognizes an off-hook signal, the CO returns dial tone to the calling party. System 85 software is not involved in this call-origination process. So, during the process, the System 85 does not invoke an originating register. Without this register, the System 85 cannot outpulse the stored digits.

Precedence Calling

The LND feature completely stores and redials the digits dialed during a Precedence Calling sequence.

Priority Calling

On activation of Priority Calling, the extension dialed after hearing the second dial tone is stored in LND memory.

Queuing

The Queuing feature handles external calls placed with the Last Number Dialed feature in the same way that calls placed with manually dialed digits are handled.

Remote Access

The LND feature does not store and redial the digits dialed during a Remote Access call.

Route Advance

The LND feature will store and redial a Route Advance call. The original trunk-group access code and the destination number are stored by LND.

Tenant Services

A voice terminal user (in an extension other than Extension Partition 0) can use the Last Number Dialed button to redial calls within the user's partition, to Extension Partition 0, to the associated attendant partition, to Attendant Partition 0, or over an associated trunk group. When the user tries to use this button to redial an illegal call, the switch returns intercept treatment to the calling party.

A voice terminal user in Extension Partition 0 can use the Last Number Dialed button to redial calls to any extension partition, to any attendant partition, or over any trunk group in the switch.

Through Dialing

The Last Number Dialed feature stores and redials the digits dialed by a voice terminal user during a Through Dialing connection. However, for a Through Dialing call, an attendant initially accesses a trunk group for the voice terminal user. Therefore, when digits are redialed using the Last Number Dialed feature, the trunk-group access digit(s) would not be included as outpulsed digits.

Trunk Verification—Voice Terminal

The LND feature does not store or redial trunk-test dial sequences. Once a trunk has been verified, redialing the digit sequence would not be useful.

Unattended Console Service—Call Answer From Any Voice Terminal

The LND feature does not store or redial the CAAVT access code at a voice terminal that responds to the general night-service alert. Instead, the previously stored digits will remain in LND memory.

HARDWARE REQUIREMENTS

None.

FEATURE ADMINISTRATION

The LND feature is assigned on a per-switch, per-trunk group, and per-voice terminal basis.

The per-trunk group option is the LND redial delay interval. This interval is between 0 and 5 seconds in 1/10-second increments (with a default of 0 seconds), and is assigned in Procedure 101. The field that assigns the redial delay to a particular CO or tie trunk group can range from 0 to 50 with 1 equal to 0.1 seconds and 50 equal to 5.0 seconds.

The Last Number Dialed feature is administered using the MAAP (Maintenance and Administration Panel). The customer can partially administer this feature using the SMT (System Management Terminal). This feature can also be administered using CSM (Centralized System Management).

MAAP AND SMT PROCEDURES — LAST NUMBER DIALED			
PROCEDURE	**WORD**	**PURPOSE**	**SMT**
054	2	Assigns the LND feature button to a multiappearance voice terminal.	Yes
101	2	Assigns the LND Redial Delay Timer to a trunk group.	Yes
350	1	Assigns the first digit of the LND dial access code (if required).	No
350	2	Assigns the LND dial access code. The applicable encode is: 59 LND.	No

The following are the applicable CSM Command Paths utilizing the **admin** area of TCM or FM.

CSM SCREENS — MASKS LAST NUMBER DIALED		
APPL'N	**OBJECT**	**PURPOSE**
TCM	This command will be set type: i.e., 36-button, 12-button, bct, data-module, feature-module, coverage-module, or vds.	Administers the LND feature button to a voice terminal.
FM	trk-grp	Administers the LND Redial Delay Timer.
TCM/FM	first-digit	Assigns the first digit of the Dial Access Code (if required).
TCM/FM	dial-access-code	Assigns the LND access code.

LEAVE WORD CALLING

DESCRIPTION

The LWC (Leave Word Calling) feature allows internal callers (internal to the local switch or the Distributed Communications System) to leave messages for internal principals (the called parties) without the assistance of a secretary or Message Center agent.

Message Storage Options

Leave Word Calling messages can be stored on the local switch, an AP, or on an AUDIX Adjunct. The storage destination is an administered option. Table 70-A shows a comparison of the differences between the various message storage options available.

Table 70-1. Leave Word Calling Storage Option Attributes

STORAGE	AP		SWITCH		AUDIX	
Terminal Type	**With Display**	**Without Display**	**With Display**	**Without Display**	**With Display**	**Without Display**
Return Calls	Yes	No	Yes	No	Yes*	Yes*
Hard Copy	Yes	Yes	No	No	No	No
DCIU Link Dependent	Yes	Yes	No	No	Yes	Yes
Message Capacity	38,000 and up	38,000 and up	6,000	6,000	15,770 and up	15,770 and up
Off Hours Access	Yes	Yes	Yes	No	Yes	Yes
Off Premises Access	N/A	Yes	N/A	Yes	N/A	Yes
Message Waiting Notification	Yes	Yes	Yes	Yes	Yes	Yes
Unified Messaging	Yes	Yes	Yes†	Yes†	Yes	Yes
LWC Cancel Capability	Yes	Yes	Yes	Yes	No	No

* This function requires the R1 V2 version of the AUDIX-L or -M system.
† See the Feature Interaction between LWC and Unified Messaging.

Each storage option offers some advantages under specific conditions. For example, Leave Word Calling on the switch is an economical means of message handling on smaller System 85s where an AP or AUDIX

adjunct would not otherwise be necessary. Message storage on either an AP or AUDIX adjunct provides significantly greater message storage capacity than does storage on the switch. For users equipped with display capable terminals, message storage on the switch or AP provides visual access to messages. The AUDIX option provides audible message retrieval capability, without going through a message center agent, for users on any voice terminal (with or without display capability). Storage on the AP provides a hard copy printout capability through the demand print function.

STORAGE ON AN AP

For Leave Word Calling messages stored on an AP, flexible administration is available on the AP that defines the conditions under which a message is considered ''retrieved.'' The persons who are allowed to access Leave Word Calling messages are subdivided into three categories:

- The principal
- Message Center agents
- The Leave Word Calling administrator and other covering users.

For each of these categories, the customer can define on a *per-system basis* if accessing a message is considered retrieving the message. For example, the customer can designate that the principal and Message Center agents retrieve messages. Whereas, the Leave Word Calling administrator and other users access messages.

STORAGE ON THE SWITCH

For Leave Word Calling messages stored on the switch, there are two fixed categories:

- The principal

  The principal is allowed to retrieve messages.
- The Leave Word Calling administrator and other covering users

  The administrator and other covering users can only access messages.

STORAGE ON AUDIX ADJUNCT

When messages are stored on the AUDIX Adjunct, they are not automatically removed. When a message is first entered, it is held in a *new mail* mailbox along with other messages not yet accessed. Once an AUDIX message has been accessed, it is moved to an *old mail* mailbox. It remains in the old mail mailbox until deliberate action is taken to delete it.

Conditions For Use

A calling party can activate Leave Word Calling under any of the following conditions.

- During the ringing of an unanswered call

- While receiving a busy tone
- When someone other than the called party answers
- During the Caller Response Interval before the call routes to coverage (see Call Coverage)
- After the covering user answers
- By the covering user, leaving a message to call the covering user
- By the covering user, leaving a message to call the calling party (using the Coverage Callback button).

Message Cancellation

A Leave Word Calling message (except those stored on AUDIX) can be canceled by the originator of the message at any time before the message has been retrieved. Messages stored on AUDIX cannot be canceled or retrieved by anyone except the addressee.

Message Access and Retrieval

An automatic message waiting lamp on the called voice terminal alerts the principal to a waiting message. For the Leave Word Calling feature to be fully effective, all personally assigned terminals in the switch should have a message waiting lamp. A message left for a principal without a message waiting lamp might never be retrieved, or be retrieved after it was too late for the needed response, simply because the principal has no way of knowing about it.

After all messages for a principal have been retrieved, the message waiting lamp goes out. However, users may be able to *access* messages without necessarily *retrieving* messages.

Message Security

MESSAGE CENTER SERVICE

Message security can be ensured when a principal calls a Message Center agent to access messages. The principal can be required to recite a password to the agent. The agent verifies the password before reporting the messages.

DEMAND PRINT

Message security can also be provided for demand printouts. The principal can be required to dial a password when requesting a printout. If the password option for demand printouts is assigned, a password is required for both types of demand printing: Demand Printout and Demand Print of Delivered Messages. The password can be up to eight characters in length.

WITH AUDIX

Message security is provided for AUDIX messages by requiring a password during the log-on procedure.

DISPLAY LOCK/UNLOCK OPTION

The Lock/Unlock option reduces possible unauthorized retrieval of messages from a voice terminal with display capabilities (see the Display Voice Terminal feature). Dialing the Lock Message Retrieval access code ‘‘locks’’ the voice terminal to message retrieval (or cancellation). When the voice terminal is locked, pressing the Message Retrieval button (or attempting to cancel a message) doesn’t work. Dialing the Unlock Message Retrieval access code returns the Message Retrieval button to operation.

Feature History and Development

The Leave Word Calling feature was first available with System 85 in Release 1, Version 1. Subsequent enhancements have included:

- Display—Voice Terminal feature. First available with Release 1.
- Leave Word Calling on the AP. First available with Release 1, Version 1.
- EDC (Electronic Document Communications). First available with Release 1, Version 3.
- Leave Word Calling on the Switch. First available with Release 2, Version 1.
- DCS Transparency for LWC. First available with Release 2, Version 1 for messages on the AP, and Release 2, Version 2 for messages on the switch.
- AUDIX. First available with Release 2, Version 2.
- Demand Print. First available with Release 2, Version 2.
- Unified Messaging. First available with Release 2, Version 2.
- Demand Print of Delivered Messages. First available with Release 2, Version 3, and retrofitted to Release 2, Version 2.

USER OPERATIONS

The following are the user operating procedures for this feature.

To Activate Leave Word Calling

From a terminal with a LWC button:

- After placing your call, press the LWC button. [Confirmation tone]
- Go on-hook.

From a multiappearance terminal without a LWC button:

- Go on-hook.
- Go off-hook. [Dial tone]
- Dial the Activate LWC access code. [Second dial tone]
- Dial the extension number where the LWC message is to be delivered. [Confirmation tone]
- Go on-hook.

Using a single-appearance terminal without a RECALL button:

- Momentarily press the switchhook. [Recall dial tone]
- Dial the Activate LWC access code.
- Dial the extension number where the LWC message is to be delivered. [Confirmation tone]
- Go on-hook.

From a single-appearance terminal with a RECALL button:

- Press the RECALL button. [Recall dial tone]
- Dial the Activate LWC access code.
- Dial the extension number where the LWC message is to be delivered. [Confirmation tone]
- Go on-hook.

Leave Word Calling Without Placing an Initial Call:

Any of the preceding can be accomplished without placing a call to the other terminal first.

- Press the LWC button or dial the LWC access code.
- Dial the extension number where the LWC message is to be delivered. [Confirmation tone]
- Go on-hook.

To Cancel a Leave Word Calling Message:

- The message originator should go off-hook (see NOTE). [Dial tone]
- Dial the LWC—Cancel access code (or press the LWC CANCEL button if provided).
- Dial the principal's (message destination) extension number. [Confirmation tone]
- Go on-hook.

NOTE: Cancellation must be done from the same extension that was used to leave the message

originally. Otherwise the switch will not be able to properly identify the message to be canceled.

Accessing Leave Word Calling Messages

To access messages through Message Center agent:

- Call the Message Center extension number.
- Request any messages.
- The Message Center agent reports the messages verbally. Also, the agent can tell the principal whether EDC (Electronic Document Communications) or AUDIX messages have arrived.

To access messages using Demand Printout:

- Dial the Demand Printing access code (or press an Abbreviated Dialing button with this access code as the stored number).
- Dial the extension number of the principal whose messages are being accessed.

  The printed report also notifies the principal if EDC and AUDIX messages have arrived.

To access delivered messages through Demand Printout:

- Dial the Demand Print of Delivered Messages access (or press an Abbreviated Dialing button with this access code as the stored number).
- Dial the extension number of the principal whose messages are being accessed.

RETRIEVING YOUR OWN MESSAGES VIA THE DISPLAY—VOICE TERMINAL FEATURE

Message Retrieval Without Scrolling:

- Press MESSAGE RETRIEVAL. [Display shows Retrieval in Progress, Messages for (Name).]
- Press NEXT MESSAGE (to display each message).

To delete displayed message from file:

- Press DELETE MESSAGE. [Display shows DELETED.]

To return a call during Message Retrieval:

- Select an idle appearance. (Dial tone)
- Press RETURN CALL. (Extension number must appear in the displayed message.)

Message Retrieval With Scrolling:

- Press MESSAGE RETRIEVAL. [Display shows Retrieval in Progress, the Messages for (Name).]
- Press NEXT MESSAGE (to display each message).

  If message is continued, display shows continuation mark ‘‘>’’ in last field.
- Press SCROLL (to display additional segments of displayed message).

  If SCROLL is pressed when there is no next segment, the display will show the next message (same as NEXT MESSAGE button).

MESSAGE ACCESS BY COVERING USER

To Access Principal’s Message File as a Covering User:

- Press an inactive appearance button.
- Press COVER MSG RETRIEVAL. [Display shows WHOSE MESSAGES?]
- Dial principal’s extension number (when display shows: MESSAGES FOR [Name]).
- Press NEXT MESSAGE.

To Access Principal’s Message File During Call with Principal:

- Press HOLD.
- Press an idle appearance button.
- Press COVER MSG RETRIEVAL. [Display shows WHOSE MESSAGES?]
- Dial principal’s extension number.
- Press the held appearance button.

To Return Call for Principal to Displayed Message Originator:

NOTE: Originator’s extension number (the number to which the call is being returned) must appear in the current message.

- Press TRANSFER. [Dial tone]
- Press RETURN CALL.
- Press TRANSFER.

NOTE: When Leave Word Calling messages are stored on the switch, these messages must be accessed using a display module.

Securing the Message Retrieval Function on the Display

To Lock the Message Retrieval Function off the Display:

- Go off-hook on an inactive line appearance. [Dial tone]
- Dial the LOCK access code. [Confirmation tone]

(This terminal cannot now be used to perform Message Retrieval or Cancellation functions.)

To Unlock the terminal (Return Message Retrieval):

- Go off-hook on an inactive line appearance. [Dial tone]
- Dial the UNLOCK access code. [Confirmation tone]

Accessing Messages from AUDIX:

- Log into AUDIX.
- Scan the Incoming Mailbox.

The AUDIX system reports the new messages and notifies subscribers of the presence of EDC and Message Center messages.

NOTE: When Leave Word Calling messages are stored on the AUDIX system, these messages are accessed by scanning the Incoming Mailbox.

CONSIDERATIONS

Confirmation Tone

With the Leave Word Calling feature, confirmation tone has a limited meaning. It means that the switch has accepted the Leave Word Calling message for the dialed extension. It does not mean that the message will (or even can) be delivered. The same is true for Leave Word Calling Cancellation. That is, confirmation tone means that the switch has accepted an instruction to cancel the last message left by the extension used to enter that instruction. It does not mean that the message has not already been accessed or retrieved. It also does not mean that the desired message will be canceled if it was originally left from a different extension.

Message Waiting Lamps

The Leave Word Calling feature works best when as many extensions as possible have a Message Waiting Lamp assigned. The switch will accept a message for any assigned extension. However, it cannot alert an extension user that a message is waiting unless a message waiting lamp is available. If message waiting lamps are not assigned to all extensions, some other system, such as regularly calling the Message Center for messages, must be used to ensure that messages are retrieved. As many as 10,500 automatic message waiting lamps can be assigned to voice terminals within a single switch.

With Multiple APs

When multiple APs are connected to one System 85, messages are stored on the AP serving the called principal.

Redundant Messages

On the AP: Messages left more than once from the same extension number to the same principal are not stored repeatedly on the AP. Only the most recent message is stored along with the number of times the calling party left the message.

On the Switch: Messages left more than once from the same extension number to the same principal are stored a maximum of nine times. If the calling party attempts LWC more than nine times, the most recent nine messages are retained.

Global Message Access

Persons authorized to access messages for anyone on the switch do not have to be included in the coverage path (see Call Coverage feature) for a principal to access that principal's messages.

LWC Messages on Redirected Calls

Messages are always stored for the originally dialed voice terminal, even if the call has been redirected to another voice terminal by Call Forwarding—Follow Me, Hunting, Call Pickup, or Call Coverage.

Fixed Standard Messages

The type of Leave Word Calling message to be used is selected at the time of installation. The user cannot change the standard information and format of a message after installation of the switch.

Switch Message Capacity

When the storage destination for LWC is the switch, up to 6,000 messages can be stored at any one time in the switch memory. An individual principal can have as many as 16 messages at any one time. When either of these limits is reached, the switch denies activation of LWC by returning intercept tone.

LWC in a DCS Environment

On the AP: In System 85 switches, the calling partys' names and network numbers are stored on the called party's local AP. This mode of operation is preferable and recommended, since it provides transparency. When the originating node is a System 85, Release 2, Version 2 and later switch, the callers' names are also associated with calling number messages, but these names will only be used by the distant switch (not the distant AP).

On the Switch: DCS transparency of LWC on the switch is available when all switches in the DCS are System 85, Release 2, Version 2 or later. These switches send, transfer, and receive ''name-messages'' on internodal calls. These messages provide the same information that a local AP would. That is, the caller's name is associated with the calling extension and is provided to the called party on message retrieval. However, transparency is lost if all nodes involved (including tandeming nodes) are not Release 2, Version 2 or later. Earlier System 85 switches (and DIMENSION System switches or System 75 switches earlier than Release 1, Version 2) cannot handle name messages. When one of these switches is in the path, the name message is lost.

On AUDIX: Full DCS transparency is not available for messages stored on AUDIX. Only the extension number of the calling party is passed to the AUDIX adjunct. The name is not provided on internodal calls. If DCS transparency is required, AUDIX subscribers can use the AUDIX system for Voice Mailbox and Call Answering while using Leave Word Calling on the AP.

In Mixed Networks: When a DCS network is composed of different kinds of switches (i.e., System 85, System 75, and DIMENSION System), or different versions of the System 85, Release 2 switch, transparency for Leave Word Calling will vary based on the specific switches used.

Hard and Soft Processor Swaps

The Lock/Unlock option for message retrieval on display sets is stored in a status portion of switch memory. When a hard processor swap occurs, every display voice terminal will be in the locked mode after the hard swap is finished.

The Leave Word Calling feature operates normally during a soft processor swap.

INTERACTIONS WITH OTHER FEATURES

The following System 85 features affect or are affected by the operation of this feature.

AUDIX (Audio Information Exchange)

If a principal's LWC messages are stored on the AUDIX system, the originator of a LWC message cannot cancel the message. When the message originator tries to cancel the message, the switch will accept the request with confirmation tone. However, the LWC message is not removed from the principal's AUDIX mailbox.

Call Coverage

Leave Word Calling complements the Call Coverage feature by allowing the calling party to request a return call during or before the coverage process. Leave Word Calling messages are directed to the principal originally called even when calls redirect via Call Coverage. The only exception is calls redirected to an attendant. Leave Word Calling is not allowed when a call is redirected to an attendant.

Coverage Message Retrieval

Coverage Message Retrieval is denied to any covering user not in the principal's coverage path, except for ''Global Retrievers.''

LWC on the Switch

Leave Word Calling can be provided on a switch that has no AP. Messages are stored on the switch. Global retrievers can retrieve messages for anyone in the switch. This ability is useful for attendants and message center agents who may support users for whom they are not covering users. (Note that message retrieval cannot be assigned to an attendant console. A separate display voice terminal or data terminal must be used for this purpose.) Global retrievers need only one COVERAGE MSG RETRIEVAL button. The same button works for global retrieval, as well as for coverage-path retrieval. All messages accessible by Coverage Message Retrieval can be accessed globally.

Call Forwarding—Busy and Don't Answer

Within the local switch, Leave Word Calling messages are directed to the principal originally called even when calls redirect via Call Forwarding—Busy and Don't Answer. The only exception to this is calls redirected to the attendant. Leave Word Calling is not allowed when a call is redirected to the attendant.

Call Forwarding—Don't Answer

Within the local switch, Leave Word Calling messages are directed to the principal originally called even when calls redirect via Call Forwarding—Don't Answer. The only exception to this is calls redirected to the attendant. Leave Word Calling is not allowed when a call is redirected to the attendant.

Call Forwarding—Follow Me

In a non-DCS environment, Leave Word Calling messages are directed to the principal originally called even when calls redirect via Call Forwarding—Follow Me. The only exception to this is calls redirected to an attendant. Leave Word Calling is not allowed when a call is redirected to an attendant.

In a DCS Environment

In a DCS environment without APs, if a call is forwarded between nodes, activation of Leave Word Calling is denied toward the originally called voice terminal.

Call Pickup

Leave Word Calling messages are always addressed to the principal originally called, even when a call redirects via Call Pickup.

Conference—Three Party

In a DCS environment without APs, after an internode 3-way conference is established, activation of Leave Word Calling is denied.

DCS (Distributed Communications System)

In the DCS with all System 85, Release 2, Version 2, or later switches, transparency is provided between switches with APs. However, with Version 2 and 3 switches, messages can only be accessed from the node on which the message is stored. The message indication sent by the switch (i.e., light the MESSAGE lamp) can only be sent to a voice terminal within the node on which a message is stored; the message indication cannot be sent to another node in the DCS. Also, if the attendant extends a call to another node, activation of Leave Word Calling is denied.

In the DCS environment, where one or more switches do not have APs, LWC can still be provided. In this case, the LWC messages are stored on the switch or the AUDIX adjunct rather than on the AP. However, the caller's name is not always included as part of the LWC message. When the caller's name is not available, the LWC message includes only the caller's extension number.

For LWC on the switch only, if all the switches involved are Release 2, Version 2, or later, the assigned name for the extension is also included in the message.

For DCSs consisting only of System 85, Release 2, Version 4 switches, using the ES (Enhanced Services) message set, centralized messaging provides full DCS transparency for Leave Word Calling.

In mixed DCSs (where other types of switches may be involved in the connection) DCS transparency can be lost depending on what type of switch is used.

DCS and Call Coverage

A covering user on a node where LWC messages are stored on the switch cannot activate coverage callback when the caller is on a remote node. The covering user may activate LWC.

Hunting

Leave Word Calling messages are directed to the principal originally called even when calls redirect via the Hunting feature. The only exception to this is calls redirected to an attendant. Leave Word Calling is not allowed when a call is redirected to an attendant.

ISDN (Integrated Services Digital Network)/PRI (Primary Rate Interface)

The Leave Word Calling feature is a System 85 switch feature and not an ISDN feature in Release 2, Version 4. Leave Word Calling will work within a DCS with ISDN connections (through the interworking function) but not for ISDN calls to or from the public network or a non-DCS private network.

IPA (Interpartition Access)

Leave Word Calling messages can only be left for an extension in the same partition group or for an extension in Extension Partition 0. When Leave Word Calling is blocked by partitioning, the switch returns intercept treatment to the calling party.

Demand Print

The Demand Print function of the Leave Word Calling feature is also partitioned as part of the Tenant Services feature.

When a demand printout is requested from a voice terminal (in a partition other than Extension Partition 0), System 85 software checks to determine whether the extension used to retrieve the messages and the extension for which the messages were left are in the same partition group. If not, the switch returns intercept treatment to the party requesting the demand printout.

From a voice terminal in Extension Partition 0, a demand printout can be requested for messages left to any extension in the switch.

Given the preceding operation, there are two approaches to implementing the Demand Print function on a partitioned switch. One approach is to provide a voice terminal and an associated printer for each partition group. The other approach is to provide a voice terminal and an associated printer to Extension Partition 0, and share this facility with all of the partition groups.

> **NOTE:** Access to a printer cannot be shared by several partition groups and denied to the other partition groups.

Last Number Dialed

When a user activates LWC, the LWC access code is not stored and redialed by the LND (Last Number Dialed) feature. The extension number dialed after the second dial tone is stored in LND memory.

LWC on the Switch and Call Coverage

Global retrievers need only one COVERAGE MSG RETRIEVAL button. The same button works for global retrieval, as well as for coverage-path retrieval. All messages accessible by Coverage Message Retrieval can be accessed globally.

LWC Without an AP and Traffic Reports

Traffic routines count the number of messages accessed by principals and the number accessed by covering users. Messages accessed globally by the authorized users are counted as coverage message retrievals.

Tenant Services

Leave Word Calling messages can only be left for an extension in the same extension partition or for an extension in Extension Partition 0. When Leave Word Calling is blocked by partitioning, the switch returns intercept treatment to the calling party.

Demand Print

The Demand Print function of the Leave Word Calling feature is also partitioned as part of the Tenant Services feature.

When a demand printout is requested from a voice terminal (in a partition other than Extension Partition 0), System 85 software checks to determine whether the extension used to retrieve the messages and the extension for which the messages were left are in the same extension partition. If not, the switch returns intercept treatment to the party requesting the demand printout.

From a voice terminal in Extension Partition 0, a demand printout can be requested for messages left to any extension in the switch.

Given the preceding operation, there are two approaches to implementing the Demand Print function on a partitioned switch. One approach is to provide a voice terminal and an associated printer for each extension partition. The other approach is to provide a voice terminal and an associated printer to Extension Partition 0, and share this facility with all of the extension partitions.

NOTE: Access to a printer cannot be shared by several tenants and denied to the other tenants.

Transfer

In a DCS environment without APs, after an internode call is transferred, activation of Leave Word Calling is denied.

Unified Messaging

The Unified Messaging feature is provided between all message storage services. However, when LWC messages are stored on the switch, LWC message notification is not provided to the AP messaging services [EDC (Electronic Document Communications) or Message Center].

RESTRICTING FEATURE USE

Covering users can be restricted from retrieving the principal's messages. This is done through the voice terminal translation using Procedure 000, Word 2.

HARDWARE REQUIREMENTS

The Leave Word Calling feature uses the following additional or special hardware.

- Voice terminals equipped with an automatic message waiting lamp
- An SN228B or SN229 Automatic Message Waiting Indicator interface circuit for each analog voice terminal (eight circuits per circuit pack)
- Digital voice terminals with Voice Terminal Display capabilities, such as the 7405D voice terminal with 40-character D401A display module (optional for message retrieval) or the 7407D IDT (Integrated Display Terminal).
- The 510D or 515 BCT voice terminals (optional for message retrieval)
- An AP with Message Center software (unless LWC is used without an AP)

  NOTE: For demand printing of delivered messages, the AP must be 1D.12 or later.

- An AUDIX adjunct to store LWC messages (optional)
- TELETYPE* 443, 445, 450, or 460 printer(s) if the demand print option is used.

FEATURE ADMINISTRATION

Assignment of Leave Word Calling is on a line class-of-service basis. Assignment of the message-storage destination is on a per-voice terminal basis. The customer can partially administer this feature using the SMT (System Management Terminal) or the TCM (Terminal Change Management) feature. Leave Word Calling can also be administered using CSM (Centralized System Management).

* Registered trademark of AT&T.

The following are the applicable MAAP and SMT procedures.

MAAP AND SMT PROCEDURES — LEAVE WORD CALLING			
PROCEDURE	**WORD**	**PURPOSE**	**SMT**
000	1	Assigns the class of service to an extension.	Yes
000	2	Specifies the destination (switch, AUDIX adjunct, or AP) for LWC message storage for a voice terminal and designates Call Coverage message retrieval permission.	Yes
010	2	Assigns Leave Word Calling to a voice terminal class of service.	Yes
012	1	Assigns a name to an extension or trunk group.	Yes
012	2	Administers the name or identification for the extension or trunk group administered in Procedure 012, Word 1.	Yes
012	3	Compacts the Name Data Base software table to free as much memory space as possible to add additional names.	Yes
051	1	Assigns Leave Word Calling global retrieval to a terminal	Yes
054	1	Assigns the Leave Word Calling—Activate button to a multiappearance voice terminal. The applicable encode is as follows: 22 Leave Word Calling—Activate.	Yes
054	2	Assigns the Leave Word Calling—Cancel button to a multiappearance voice terminal. The applicable encode is as follows: 0 Leave Word Calling—Cancel.	Yes
063	1	Assigns an automatic message waiting lamp to a voice terminal.	Yes
256	1	Assigns the DCIU data link characteristics for Leave Word Calling on AP.*	No
256	2	Administers the level 2 timers and counters for the DCIU link.	No
256	3	Administers the level 3 timers and counters for the DCIU link.	No
* A DCIU link is required for LWC on the AP or the AUDIX. See Appendix D for a detailed discussion of the DCIU and its administration.			

MAAP AND SMT PROCEDURES LEAVE WORD CALLING (Contd)			
PROCEDURE	**WORD**	**PURPOSE**	**SMT**
257	1	Administers the components and priority status of the DCIU channel.	No
257	2	Administers the switch port for the DCIU channel.	No
258	1	Copies the translation changes made using Procedures 256 and 257 to working tables.	No
258	2	Refreshes the DCIU temporary translation tables before using Procedures 256 and 257.	No
275	1	Assigns DCIU to the system class of service.	Yes
275	3	Assigns Demand Print passwords to the system class of service.	Yes
350	1	Assigns the first digit of the feature dial access codes (if required).	No
350	2	Assigns the feature dial access codes. The applicable encodes are as follows: 10 Demand Printing 14 Demand Print of Delivered Messages 66 Activate Leave Word Calling 67 Cancel Leave Word Calling 68 Lock Message Retrieval 69 Unlock Message Retrieval.	No

The following are the applicable TCM path names used with the AP 16.

TCM SCREENS — LEAVE WORD CALLING	
PATH NAME	**PURPOSE**
terminal-change class-of-service attributes	Assigns Leave Word Calling to a voice terminal class of service.
terminal-change extensions attributes	Assigns the class of service to an extension number.
terminal-change names compact	Compacts the Name Data Base software table to free as much memory space as possible to add additional names.
terminal-change names extension-names	Assigns a name or identification to an extension number.
terminal-change names trunk-group-names	Assigns a name or identification to a trunk group.
terminal-change terminal buttons	Assigns the Leave Word Calling—Activate and Cancel buttons to a voice terminal. Also, use this screen to assign the display feature buttons to a 7405D with display module or 7407D IDT. This screen is also used to assign the Automatic Message Waiting lamp to a voice terminal.
terminal-change terminal equipment	Assigns the LOCK and UNLOCK option to a voice terminal with display capability.

The following is the applicable FM path name used with the AP 16.

FM SCREEN — LEAVE WORD CALLING	
PATH NAME	**PURPOSE**
facilities-mgmt dciu link-assignments	Generates a report of the current DCIU link assignments.

The following are the applicable CSM Command Paths utilizing the **admin** area of TCM or FM.

CSM SCREENS — MASKS LEAVE WORD CALLING		
APPL'N	**OBJECT**	**PURPOSE**
TCM	extension	Administers the class of service to an extension, and specifies the destination (switch, AUDIX adjunct, or AP) for LWC message storage for a voice terminal and designates Call Coverage message retrieval permission. This command also assigns a name to an extension and administers the name or identification for the extension. Assigns automatic message waiting lamps to an analog voice terminal.
FM	trk-grp	Administers name to trunk group(s).
TCM/FM	names-data base	Compacts the names data base in the switch so that unused words become available for future name entries.
TCM	class-of-service	Assigns the Leave Word Calling feature to a voice terminal class of service.
TCM	This command will be set type: i.e., 36-button, 12-button, bct, vds, ids, pt510, feature-module, or coverage-module.	Assigns Leave Word Calling global to a terminal. This command also assigns the Leave Word Calling — Activate button and the Leave Word Calling — Cancel button to a multiappearance voice terminal, and assigns an automatic message waiting lamp to a multifunction voice terminal.
FM	dciu-link	Administers the DCIU data link characteristics for Leave Word Calling in the external processor. The external processor can be an AP, AUDIX, another switch, or a 3B2 processor. This command also administers the level 2 and level 3 timer and counters for the DCIU link.
FM	dciu-route-codes	Administers the components, the priority status, and the switch port for the DCIU channel.
TCM/FM	sys-cos	Assigns DCIU to the system class of service. This command also assigns Demand Print passwords to the system class of service.
TCM/FM	first-digit	Administers the first digit of the feature dial access codes (if required).
TCM/FM	dial-access-code	Administers the LWC feature dial access codes.

LINE LOCKOUT

DESCRIPTION

The Line Lockout feature places a voice terminal in a lockout condition when the user goes off-hook and does not dial within 10 seconds or pauses for more than 10 seconds while dialing. This feature frees switching facilities for other calls. When the user's extension number is taken out of service, the switch returns intercept tone for 10 seconds as a warning to the user. Going on-hook for 0.3 seconds restores service.

Feature History and Development

This feature was first available on System 85 in Release 1. There have been no changes to this feature since Release 1.

USER OPERATIONS

None.

CONSIDERATIONS

Busy Tone

Busy tone is heard by a voice terminal user when calling another voice terminal in the lockout state.

Returning a Voice Terminal to Service

The user may think the voice terminal is out the service when intercept tone is received, but there is probably nothing wrong with the voice terminal. The voice terminal can be returned to service by going on-hook then off-hook again.

Disconnected Party

When a user fails to go on-hook after the other party has disconnected, the user will be placed in a lockout condition after 10 seconds. No intercept tone is returned.

INTERACTIONS WITH OTHER FEATURES

The following System 85 features affect or are affected by the operation of this feature.

Attendant Call Waiting

An attendant call is not allowed to wait on a voice terminal that has been locked out.

Automatic Callback

Automatic Callback can be activated toward a voice terminal in the lockout condition. When the voice terminal in the lockout condition goes on-hook, the callback process begins.

To activate Automatic Callback, a voice terminal user goes off-hook, dials the Automatic Callback access code, dials the number of the busy voice terminal, and goes on-hook. If the user fails to go on-hook within 6 seconds, line lockout warning occurs. The warning is intercept tone for a duration of 10 seconds.

Busy Verification of Lines

Busy verification of a locked-out voice terminal makes an immediate talking connection to the locked-out voice terminal. No barge-in tone is heard. The ANS lamp lights at the console.

Call Forwarding—Busy and Don't Answer

A call directed toward a locked-out voice terminal with this feature active forwards to the designated terminal.

Call Forwarding—Don't Answer

A call directed toward a locked-out voice terminal with this feature active does not forward. Instead, the switch will return busy tone to the calling party.

Call Forwarding—Follow Me

A call directed toward a locked-out voice terminal with this feature active forwards to the designated terminal.

Call Waiting

A call is not allowed to wait on a voice terminal in a locked out state.

Override

Busy tone is returned to a caller using override toward a voice terminal in lockout.

Priority Calling

Busy tone is returned to a caller attempting a priority call toward a voice terminal in lockout.

HARDWARE REQUIREMENTS

None.

FEATURE ADMINISTRATION

The Line Lockout feature is always provided. Feature administration is not required.

LINE/FEATURE STATUS INDICATION

DESCRIPTION

This feature provides a visual indication of a call's status and/or a feature's status (activated or deactivated) for each button on a multiappearance voice terminal. The visual indication is provided by lamps located beside the button they monitor. This feature reduces the likelihood of inadvertent call interruption and serves as a reminder of what features are active.

All appearance buttons and some feature buttons have green status lamps. For appearance buttons, the green status lamp flashes during ringing, lights steadily when busy, and winks or flutters during a hold. For feature buttons, the green status lamp indicates when a feature is active or inactive.

All appearance buttons also have red status lamps. This lamp lights to indicate the appearance the user is connected to or will connect to when going off-hook. This lamp is inactive if a feature is assigned to the button. Only one red status lamp may be lighted on one voice terminal at any one time.

Feature History and Development

This feature was first available on System 85 in Release 1. There have been no changes to this feature since its introduction.

USER OPERATIONS

None.

INTERACTIONS WITH OTHER FEATURES

None.

HARDWARE REQUIREMENTS

The Line/Feature Status Indication feature requires the use of multiappearance voice terminals.

FEATURE ADMINISTRATION

The Line/Feature Status Indication feature is provided automatically when an appearance or feature button is assigned to a multiappearance voice terminal.

LOUDSPEAKER PAGING ACCESS

DESCRIPTION

The Loudspeaker Paging Access feature allows attendants and voice terminal users to make announcements over a voice paging system. This simplifies contacting a given party by reducing the need for a messenger or repeated dialing. Paging is also useful for announcements during safety or emergency situations.

Paging Zones

Announcements are made over paging zones (areas). There can be up to 18 paging zones. Announcements can be made over several paging zones at one time. This is called *all-zones paging*. All-zones paging makes the announcement over paging zones 1 through 5 by bridging them together.

Paging Zone Codes

Paging zones are accessed by dialing a paging zone code. Paging zone codes are numbered 1 through 18. The all-zones (zones 1 through 5) paging code is 0. If more than ten paging zones are used, a 2-digit code is necessary when dialing any paging zone. For example, the all-zones paging code ‘‘0’’ becomes ‘‘00’’ and the paging zone code of ‘‘4’’ becomes ‘‘04.’’

Loudspeaker Paging Access provides:

- Attendant Direct Access

  Allows an attendant to access paging by pressing and holding paging buttons. An all-zones paging button, as well as buttons for each paging zone, may be provided. Also priority paging buttons may be provided for all-zones and for each individual zone. When direct access is used for paging, answer-back is not provided.

- Attendant and Voice Terminal Dial Access

  Allows an attendant or a voice terminal user to dial-access each zone individually or to dial-access all-zones when multizone paging is provided. Answer-back is provided when the paged party dial accesses the paging zones.

- Priority Paging

  Allows an attendant and/or voice terminal user to dial-access a paging zone and answer-back channel and preempt any voice terminal connected to that zone or channel. When priority paging is desired, the attendant or voice terminal user should dial ‘‘1’’ for the answer-back code number.

- Paging With the Transfer Feature

  Allows voice terminal users, that have the Transfer feature assigned, to access paging while on a 2-party

call. An answer-back channel must be activated.

- Answer-Back

  Provides nine answer-back channels over which paged parties can be connected to calls.

- Music Option

  Provides music instead of ringback tone while waiting for an answer-back.

Feature History and Development

This feature was first available with System 85 in Release 1. The enhancement to this feature include:

- An automatic attendant recall was provided beginning with Release 2, Version 2.
- An option to have music instead of ringback tone while waiting for an answer-back was added for Release 2, Version 3. This option is administered in Procedure 275, Word 1, Field 7.
- An administrable recall button is provided for R2 V4 and was also retrofitted to the R2 V2 and R2 V3 software packages.

USER OPERATIONS

To Page a Party Using Attendant Direct Access:

- Press and hold the all-zones button, the paging button for the appropriate zone, or the priority paging button. [PA lamp is lit. PAGE lamp lights.]
- Make the announcement over the loudspeaker system.
- Release PAGE. [PAGE lamp goes out.]

To Page a Party Using Attendant Dial Access

With no source party and no answer-back wanted:

- Press an idle loop button. [PA lamp goes out, and ATND lamp lights.]
- Press START. [Dial tone]
- Dial the paging trunk-group access code. [Second dial tone]
- Dial the individual paging zone number or ‘‘0’’ for all zones.
- Dial the answer-back channel number ‘‘0.’’ [Confirmation tone is heard, and the RING lamp lights.]
- Make the announcement over the loudspeaker system.
- Press RELEASE. [RING and ATND lamps go out, PA lamp lights, and paging equipment is released.]

With no source party and an answer-back wanted:

- Press an idle loop button. [PA lamp goes out, and ATND lamp lights.]
- Press START. [Dial tone]
- Dial the paging trunk-group access code. [Second dial tone]
- Dial the individual paging zone number or ‘‘0’’ for all zones.
- Dial an answer-back channel number ‘‘1’’ through ‘‘9.’’ [Confirmation tone is heard, and the RING lamp lights.]
- Make the announcement over the loudspeaker system. (Be sure to request the reply over the appropriate answer-back channel.)
- Press HOLD. [ATND lamp goes out. PA and HOLD lamps light.]
- Wait for answer-back.
- When the HOLD lamp flashes, press the appropriate loop button to answer the answer-back call. [RING and HOLD lamps go out, and ATND lamp lights.]
- Talk with the paged party.
- When finished with the paged party, press RELEASE. [Attendant and paged party are disconnected, ATND lamp goes out, PA lamp lights, and paging equipment is released.]

With a source party and no answer-back wanted:

- Be sure a connection is made with a source party. [ATND lamp is lit, and ICI displays the extension number.]
- Press START. [Source party is split away from the attendant, the SPLIT lamp lights, and the attendant hears dial tone.]
- Dial the paging trunk-group access code. [Second dial tone]
- Dial the individual paging zone number or ‘‘0’’ for all zones.
- Dial the answer-back code number ‘‘0.’’ [Confirmation tone is heard, and the RING lamp lights.]
- Make the announcement over the loudspeaker system.
- Press CANC. [Attendant is reconnected to the source party, RING lamp goes out, and paging equipment is released.]
- Press RELEASE. [Attendant is disconnected from the source party, ATND lamp goes out, and PA lamp lights.]

With a source party and an answer-back wanted:

- Be sure a connection is made with a source party. [ATND lamp is lit, and ICI displays the extension number.]
- Press START. [Source party is split away from the attendant, the SPLIT lamp lights, and the attendant hears dial tone.]

- Dial the paging trunk-group access code. [Second dial tone]
- Dial the individual paging zone number or ‘‘0’’ for all zones.
- Dial an answer-back channel number ‘‘1’’ through ‘‘9.’’ [Confirmation tone is heard, and the RING lamp lights.]
- Make the announcement over the loudspeaker system. (Be sure to request the reply over the appropriate answer-back channel.)
- Press RELEASE. [Attendant is disconnected from the source party. The source party hears ringback tone or music until the paged party answers back. ATND and SPLIT lamps go out, and the PA lamp lights.]
- Paged party answers back. [Both parties receive confirmation tone, and RING lamp goes out.]

To Page a Party Using Voice Terminal Dial Access

Without an answer-back wanted:

- Go off-hook. [Dial tone]
- Dial the paging trunk-group access code. [Second dial tone]
- Dial the individual paging zone number or ‘‘0’’ for all zones.
- Dial the answer-back code number ‘‘0.’’ [Confirmation tone is heard. The appropriate paging lamps on the attendant consoles light.]
- Make the announcement over the loudspeaker system.
- Go on-hook. [Paging lamps on the attendant consoles go out.]

With an answer-back wanted (priority):

- Go off-hook. [Dial tone]
- Dial the paging trunk-group access code. [Second dial tone]
- Dial the individual paging zone number or ‘‘0’’ for all zones.
- Dial the answer-back code number ‘‘1.’’ [Confirmation tone is heard. The appropriate paging lamps on the attendant consoles light.]
- Make the announcement over the loudspeaker system. (Be sure to request the reply over answer-back channel 1.)
- Press RECALL or momentarily press the switchhook. [Ringback tone or music is heard, and the paging lamps on the attendant consoles go out.]
- The paged party answers the page. [When paging and paged parties are connected, ringback tone or music is removed, and confirmation tone is heard by both parties. The answer-back channel is released.]

Without an answer-back wanted (priority):

- Go off-hook. [Dial tone]
- Dial the paging trunk-group access code. [Second dial tone]
- Dial the individual paging zone number or ‘‘0’’ for all zones.
- Dial the answer-back code number ‘‘1.’’ [Confirmation tone is heard. The appropriate paging lamps on the attendant consoles light.]
- Make the announcement over the loudspeaker system.
- Go on-hook. [The paging equipment is released. Paging lamps on the attendant consoles go out.]

With a 2-party connection at a single-line voice terminal and no answer-back wanted (priority):

- Press RECALL or momentarily press the switchhook. [The second party is put into soft hold. Recall dial tone is heard.]
- Dial the paging trunk-group access code. [Second dial tone]
- Dial the individual paging zone number or ‘‘0’’ for all zones.
- Dial the answer-back channel number ‘‘1.’’ [Confirmation tone is heard. The appropriate paging lamps on the attendant consoles light.]
- Make the announcement over the loudspeaker system.
- Press RECALL or momentarily press the switchhook. [The paging circuit is disconnected, ringback tone is heard, and the paging lamps on the attendant consoles go out.]
- Press RECALL or momentarily press the switchhook. [The paging party is reconnected with the party in soft hold. The answer-back channel is released.]

With a 2-party connection at a multiappearance voice terminal and no answer-back wanted (priority):

- Press HOLD. [The second party is put on hold, and the green status lamp flashes.]
- Press an idle line appearance. [Dial tone]
- Dial the paging trunk-group access code. [Second dial tone]
- Dial the individual paging zone number or ‘‘0’’ for all zones.
- Dial the answer-back channel number ‘‘1.’’ [Confirmation tone is heard. The appropriate paging lamps on the attendant consoles light.]
- Make the announcement over the loudspeaker system.
- Press the line appearance of the party on hold. [The two parties are reconnected. The green status lamp lights steady, the paging equipment is released, and the paging lamps on the attendant console go out.]

With a 2-party connection on a single-line voice terminal and no answer-back wanted:

- Press RECALL or momentarily press the switchhook. [The second party is put into soft hold. Recall dial tone is heard.]
- Dial the paging trunk-group access code. [Second dial tone]
- Dial the individual paging zone number or ‘‘0’’ for all zones.
- Dial the answer-back code ‘‘0.’’ [Confirmation tone is heard. The appropriate paging lamps on the attendant consoles light.]
- Make the announcement over the loudspeaker system.
- To reconnect to the party in soft hold, press RECALL or momentarily press the switchhook. [The paging equipment is released, and the paging lamps on the attendant consoles go out.]

With a 2-party connection on a multiappearance voice terminal and no answer-back wanted:

- Press HOLD. [The second party is put on hold, and the green status lamp flashes.]
- Press an idle line appearance. [Dial tone]
- Dial the paging trunk-group access code. [Second dial tone]
- Dial the individual paging zone number or ‘‘0’’ for all zones.
- Dial the answer-back code ‘‘0.’’ [Confirmation tone is heard. The appropriate paging lamps on the attendant consoles light.]
- Make the announcement over the loudspeaker system.
- To reconnect to the party in soft hold, press the line appearance of the party on hold. [The two parties are reconnected. The green status lamp lights steady, the paging equipment is released, and the paging lamps on the attendant console go out.]

With a 2-party connection at a single-line voice terminal and an answer-back wanted:

- Press RECALL or momentarily press the switchhook. [The other party is put into soft hold. Recall dial tone is heard.]
- Dial the paging trunk-group access code. [Second dial tone]
- Dial the individual paging zone number or ‘‘0’’ for all zones.
- Dial the answer-back code (1 for priority, from 2 to 9 for another channel). [Confirmation tone is heard. The appropriate paging lamps on the attendant consoles light.]
- Make the announcement over the loudspeaker system. (Be sure to request the reply over the appropriate answer-back channel.)
- Press RECALL or momentarily press the switchhook. [The paging equipment is released, and paging party is connected to the answer-back channel. Ringback tone or music is heard, and the paging lamps on the attendant consoles go out.]
- The paged party answers the page. [When the paging and paged parties are connected, ringback tone or music is removed, the answer-back channel is released, and confirmation tone is heard by both parties.

Held party gets ringback tone.]

- To reconnect to the held party, press RECALL. [Paged party is disconnected, and ringback tone is removed.]

With a 2-party connection at a multiappearance voice terminal and an answer-back wanted:

- Press HOLD. [The second party is put on hold. The green status lamps flashes.]
- Press an idle line appearance. [Dial tone]
- Dial the paging trunk-group access code. [Second dial tone]
- Dial the individual paging zone number or ‘‘0’’ for all zones.
- Dial the answer-back code (1 for priority, from 2 to 9 for another channel). [Confirmation tone is heard, and the appropriate paging lamps on the attendant consoles light.]
- Make the announcement over the loudspeaker system. (Be sure to request the reply over the appropriate answer-back channel.)
- Press RECALL. [Ringback tone is heard, and the paging lamps on the attendant console go out. The paging equipment is released, and the paging party is connected to the answer-back channel.]
- The paged party answers the page. [When the paging and paged parties are connected, ringback tone is removed, the answer-back channel is released, and confirmation tone is heard by both parties.]

With a 2-party connection and the answer-back transferred to the second party at a single line voice terminal:

- Press RECALL or momentarily press the switchhook. [The second party is put into soft hold. Recall dial tone is heard.]
- Dial the paging trunk-group access code. [Second dial tone]
- Dial the individual paging zone number or ‘‘0’’ for all zones.
- Dial the answer-back code (1 for priority, from 2 to 9 for another channel). [Confirmation tone is heard. The appropriate paging lamps on the attendant consoles light.]
- Make the announcement over the loudspeaker system. (Be sure to request the reply over the appropriate answer-back channel.)
- Go on-hook. [The second party is now connected to the answer-back channel, and the paging lamps on the attendant consoles go out.]
- The paged party answers the page. [When the second party and paged parties are connected, ringback tone is removed, the answer-back channel is released, and confirmation tone is heard by both parties.]

With a 2-party connection and the answer-back transferred to the second party at a multiappearance voice terminal:

- Press TRANSFER. [The second party is put into soft hold. Recall dial tone is heard.]

- Dial the paging trunk-group access code. [Second dial tone]
- Dial the individual paging zone number or ‘‘0’’ for all zones.
- Dial the answer-back code (1 for priority, from 2 to 9 for another channel). [Confirmation tone is heard. The appropriate paging lamps on the attendant consoles light.]
- Make the announcement over the loudspeaker system. (Be sure to request the reply over the appropriate answer-back channel.)
- Press RECALL.
- Press TRANSFER or CONFERENCE. [The second party is now connected to the answer-back channel, and the paging lamps on the attendant consoles go out. The green status light goes out.]
- The paged party answers the page. [When the second party and paged parties are connected, ringback tone is removed, the answer-back channel is released, and confirmation tone is heard by both parties.]

To Answer a Page:

- Go off-hook. [Dial tone]
- Dial the answer-back access code.
- Dial the answer-back channel number. [Confirmation tone is heard by both the paging and paged parties. The answer-back channel is released. Paging lamps on the attendant consoles go out.]

CONSIDERATIONS

Intercept Tone

Intercept tone is heard when a user dials an invalid answer-back access code or does not dial the channel number within 10 seconds after dialing the page zone number. Intercept tone is heard by the attendant when the attendant attempts to answer a page.

Busy Tone

Busy tone is heard when a specific zone or all-zone number is dialed and it is busy, when a terminal user attempts to preempt an attendant doing a priority page, or when an answer-back channel is not available.

Reorder Tone

Reorder tone is heard when no intercom trunk is available.

Paging Permission

Paging over the loudspeaker system is limited to paging from a voice terminal, an attendant console, or via a tie trunk access. Callers on outside trunks cannot page over the loudspeaker system. For example, the Loudspeaker Paging and the Remote Access features cannot be used on the same trunk.

Answer-Back

If a paging party wants the paged party to answer-back, the paging party should always request an answer-back and announce the answer-back channel number during the announcement.

Preempting Page

An attendant using a paging zone and/or a priority paging channel cannot be preempted.

A voice terminal user using a priority paging channel can be preempted by another user using the same priority paging channel. If a preempted party did not request answer-back, it is dropped (nothing heard). If the preempted party requested answer-back, ringback tone is heard.

Paging Zone Lamps

When a specific zone is accessed, the lamps adjacent to that zone button and the all-zone button light. When all zones are accessed, the lamps adjacent to the all-zone button and every specific zone button light.

Sharing Equipment

Code Calling Access and Loudspeaker Paging Access can share common equipment. When the 89A Control Unit is seized and is using the customer supplied loudspeaker equipment, busy tone is heard by other users attempting to use the equipment at that time.

Parked Incoming Trunk Calls

Beginning with R2 V2, incoming trunk calls that are waiting for answer-back will automatically recall an attendant after two minutes. At this time, the attendant can appropriately handle the call.

Administrable Recall Buttons

Some multiappearance voice terminals do not have a fixed RECALL button. If RECALL buttons are needed for these voice terminals, RECALL buttons can be assigned to the terminals using Procedure 054, Word 1.

INTERACTIONS WITH OTHER FEATURES

The following System 85 features affect or are affected by the operation of this feature.

Attendant Call Waiting

A call is not allowed to wait (via Attendant Call Waiting) on a line that has accessed Loudspeaker Paging (making a page or waiting for answer-back).

Busy Verification of Lines

Busy verification is denied on a voice terminal line that has accessed Loudspeaker Paging. Attempts to busy verify a voice terminal line in this state results in the attendant hearing reorder tone.

CDRR (Call Detail Recording and Reporting)

An attendant with an incoming trunk call can dial in the SMDR access code and account code and then use Loudspeaker Paging. The call record shows the call not the page.

Call Waiting

A call is not allowed to wait (via Call Waiting) on a line that has accessed Loudspeaker Paging (making a page or waiting for answer-back).

Centralized Attendant Service

The Centralized Attendant Service attendant has only 10 seconds to make a page and then the paging circuit releases. This prevents the release link trunks associated with the attendant from being tied up.

Code Calling Access

Code Calling Access and Loudspeaker Paging features may use either common amplifiers and speakers or separate amplifiers and speakers. At all times, whether common or separate equipment is used, care should be taken that both features are not being used at the same time. Simultaneous use of the features produces interference between the two audible signals. To prevent this interference, the lockout option on the 89A control unit can be set. This option allows only one feature at a time to access the amplifier and speaker equipment.

Conference—Attendant Six Party

When establishing a Conference—Attendant Six Party call, an attendant cannot connect the conference connection to the paging loudspeakers.

Music-on-Hold Access

When Music-on-Hold is implemented, music can be provided for a call on hold in an answer-back channel.

Override

Override is denied to a voice terminal line connected to Loudspeaker Paging.

Priority Calling

A call is not allowed to wait (via Priority Calling) on a line that has accessed Loudspeaker Paging (making a page or waiting for answer-back).

SMDR (Station Message Detail Recording)

An attendant with an incoming trunk call can dial in the SMDR access code and account code and then use Loudspeaker Paging. The call record shows the call not the page.

Tenant Services

The paging zones for the Loudspeaker Paging Access feature are not partitioned. By default, the provided zones are equally accessible to attendants in any attendant partition and to voice terminal users in any extension partition.

Voice terminal access to the Loudspeaker Paging Access feature can be limited or enhanced in the voice terminal class of service. To limit voice terminal access, assign a Miscellaneous Trunk Restrictions group containing the Loudspeaker Paging trunk group to a voice terminal class of service in Procedure 010, Word 3. To enhance voice terminal access, priority paging can be assigned to a voice terminal class of service in Procedure 010, Word 1.

Answer-back channels for the Loudspeaker Paging Access feature are not partitioned. A page can be answered by dialing the answer-back access code from any voice terminal in the switch.

Transfer

A single-line voice terminal user in a 2-party talking connection cannot access Loudspeaker Paging using the Transfer feature unless an answer-back channel is provided.

Trunk Verification—Voice Terminal

The testing capability of the Trunk Verification—Voice Terminal feature does not include the Loudspeaker Paging trunk.

Variable Format Call Detail Recording

With an incoming call waiting, the attendant can dial the CDR access code and the account code and then use Loudspeaker Paging Access. The call record shows the call — not the page.

RESTRICTING FEATURE USE

Access to the Loudspeaker Paging Access feature can be restricted from a voice terminal line when miscellaneous trunk restrictions are assigned to the voice terminal line via the line class of service.

HARDWARE REQUIREMENTS

The Loudspeaker Paging feature requires the following additional or special hardware:

- An SN231 auxiliary trunk circuit for each paging zone (four circuits per circuit pack)
- An 89A control unit
- A 2012D power transformer to supply power to the control unit
- An amplifier
- Speaker(s).

Figure 73-1 shows a typical setup of hardware for a paging system.

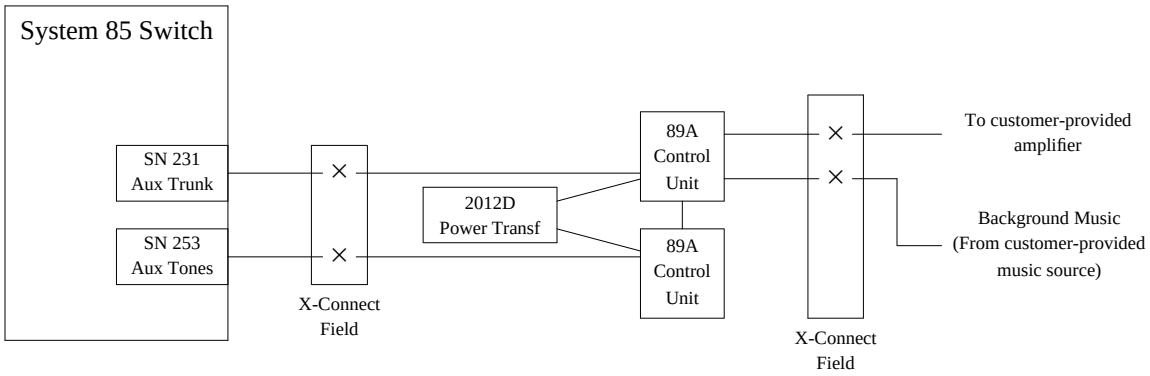

Figure 73-1. Hardware Setup for Loudspeaker Paging

FEATURE ADMINISTRATION

Assignment of the Loudspeaker Paging Access feature is on a per-system class-of-service and a per-line class-of-service basis. This feature is administered using the MAAP (Maintenance and Administration Panel). The customer can partially administer this feature using the SMT (System Management Terminal), or the TCM (Terminal Change Management) feature. This feature can also be administered using CSM (Centralized System Management).

To provide music while waiting for answer back, the Music-on-Hold feature must also be assigned.

The following are the applicable MAAP and SMT procedures.

MAAP AND SMT PROCEDURES — LOUDSPEAKER PAGING ACCESS			
PROCEDURE	**WORD**	**PURPOSE**	**SMT**
000	1	Assigns the voice terminal class of service to an extension number.	Yes
010	1	Assigns priority paging to a voice terminal class of service.	Yes
010	3	Assigns a Miscellaneous Trunk Restrictions group to a voice terminal class of service.	Yes
054	1	Assigns the RECALL button to a multiappearance voice terminal without a fixed RECALL button. The applicable encode is: 27 Recall.	Yes
100	1	Assigns the trunk group dial access code and the trunk type to the trunk group number.	No
102	—	Assigns the paging trunk group to a trunk restriction group.	Yes
150	—	Assigns an equipment location to a trunk group and to give a paging zone assignment to the trunk circuit.	No
203	1	Administers paging buttons on the attendant console.	No
275	1	Assigns Loudspeaker Paging to the system class of service and allows the option to have music-on-hold instead of ringback tone (Field 7).	Yes
350	1	Assigns the first digit of the dial access code (if required).	No
350	2	Assigns the answer-back dial access code. The applicable encode is: 17 Paging answer-back.	No

The following are the applicable TCM path names used with the AP 16.

TCM SCREENS — LOUDSPEAKER PAGING ACCESS	
PATH NAME	**PURPOSE**
terminal-change class-of-service attributes	Assigns priority paging to a voice terminal class of service and assigns a Miscellaneous Trunk Restrictions group to the voice terminal class of service.
terminal-change extensions attributes	Assigns the class of service to an extension number.

The following are the applicable CSM Command Paths utilizing the **admin** area of TCM or FM.

CSM SCREENS — MASKS LOUDSPEAKER PAGING		
APPL'N	**OBJECT**	**PURPOSE**
TCM	extension	Assigns the voice terminal class of service to an extension number.
TCM	class-of-service	Assigns priority paging and a Miscellaneous Trunk Restriction group to a voice terminal class of service.
TCM	This command will be set type: i.e., 36-button, 12-button, bct, vds, feature-module, coverage-module, or data-module.	Assigns the RECALL button to a multiappearance voice terminal without a fixed RECALL button.
FM	trk-grp	Assigns the trunk-group dial access code and the trunk type to the trunk-group number, assigns an equipment location to a trunk group, and gives a paging zone assignment to the trunk circuit.
FM	misc-trk-rst-grp	Assigns the paging trunk group to a trunk restriction group.
TCM	control-keys	Administers paging buttons on the attendant console(s).
TCM/FM	sys-cos	Assigns Loudspeaker Paging to the system class of service and allows the option to have music-on-hold instead of ringback tone.
TCM/FM	first-digit	Assigns the first digit of the dial access code (if required).
TCM/FM	dial-access-code	Assigns the answer-back dial access code.

MAIN/SATELLITE/TRIBUTARY

DESCRIPTION

A Main/Satellite/Tributary configuration (see Figure 74-1) is an independent private network configuration that can also function as an Electronic Tandem Network access arrangement. For a Main/Satellite configuration, attendant positions and public network trunk facilities are concentrated at the main, and calls to or from satellite locations pass through the main. To a caller outside the Main/Satellite complex, the system appears to be a single switch with one listed directory number. A tributary location is similar to a satellite location with the following exceptions: (1) a tributary has one or more attendant positions, and (2) a tributary has its own listed directory number.

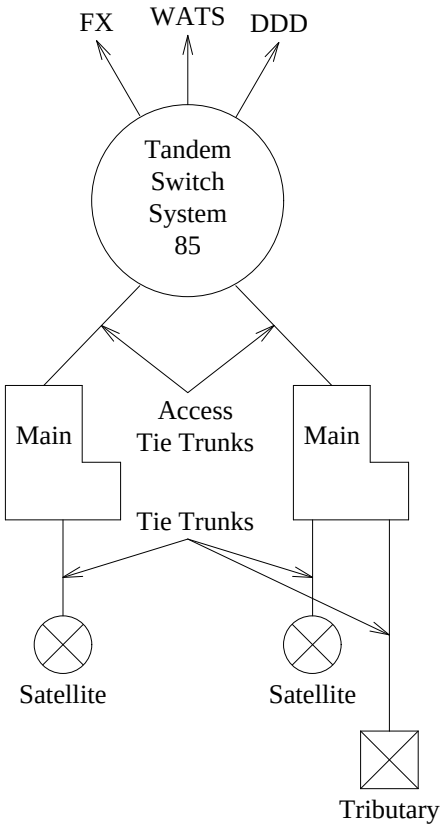

Figure 74-1. Main/Satellite and Main/Tributary Configuration

A small business can start with a single Main/Satellite or Main/Tributary complex and add trunk and switching facilities as the business grows. Figure 74-2 illustrates a Main/Satellite configuration in which tie trunks connect the main locations within an urban area and the public network carries intercity call traffic. This arrangement favors a medium-sized organization or one that has small isolated locations where intercity traffic volume is not heavy enough to justify the cost of tie trunks. In a partially connected

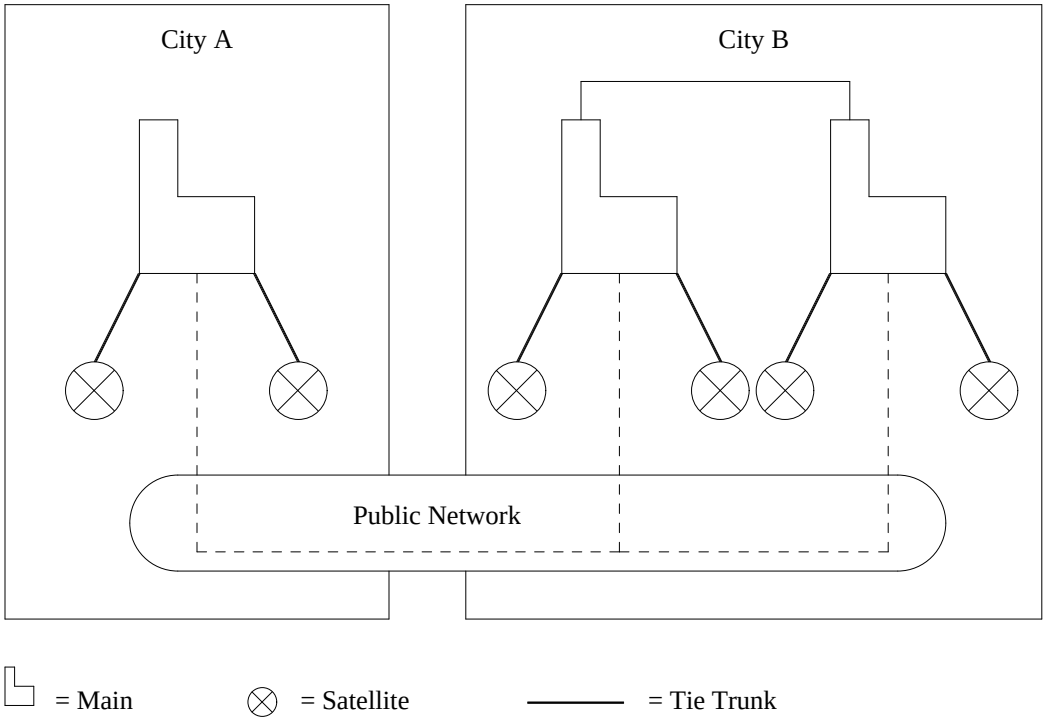

Figure 74-2. Partially Connected Main/Satellite Configuration

network such as this, private network features are only available between switches connected by tie trunks.

The following are attributes of the Main/Satellite feature.

Indialing Through Main

Incoming calls destined for a satellite location route through the main. This routing scheme reduces the number and types of trunks terminating on the satellite location.

Call Transfer

Voice terminal users within the Main/Satellite complex can transfer a call to a terminal on the same switch or any other switch in the complex. The dialing procedure, including the number of digits required to transfer a call, is consistent throughout the complex.

Uniform Numbering

A uniform numbering plan is the foundation for the Main/Satellite feature. Because each switch in the complex has a unique group of extension numbers, it can distinguish between a local call and a call to another switch in the complex. The same digits are used to dial any extension on any switch on the network either from that switch or from any other switch. Extension number steering is used to accomplish this.

Extension Number Steering

The switches of a Main/Satellite complex use single-digit or extension number steering to route calls within the complex. The first digit (or any number of digits in the extension number) steers the call to the appropriate switch, which then routes the call to the voice terminal (station). One factor that determines whether a complex uses single-digit or extension number steering is the number of switches in the complex. Any complex with more than ten switches must use extension number steering.

In a Main/Satellite complex with single-digit steering, a satellite location could be assigned all extension numbers beginning with the digit 3 (from 3000 to 3999). At the main, the digit 3 is assigned as a dial access code for trunk groups connecting to that satellite. The satellite location can use a similar steering arrangement or ETA (Extended Trunk Access). If ETA trunk groups are assigned at a satellite location, calls to extension numbers that are not assigned to that satellite are sent to the main for interpretation and routing.

In a Main/Satellite complex with extension number steering, extension numbers are defined as either normal or special. Normal extension numbers are those assigned to the local switch. Special extension numbers are those assigned to other switches in the complex. Any extension number that uses extension number steering is a special extension number. When callers dial a special extension number, the switch converts it to a trunk or feature access code (depending on how the extension number is administered) and processes the call accordingly.

System 85 uses digit inference and digit deletion. This two part process shortens call processing time on interswitch calls. For a Main/Satellite complex, all extension numbers at a satellite location have the same leading digits (one or more digits depending on the number of digits used for steering). For example, all the extension numbers at satellite A begin with the digits 38, all the extension numbers at satellite B begin with the digits 42, and so on. On a call from the main to satellite A, the main deletes the digits 38 and sends the remaining digits. The satellite infers, from the trunk group on which the call arrives, that the digits 38 were deleted. Therefore, before processing the call, the satellite replaces the deleted digits.

Feature History and Development

This feature was first available on System 85 in Release 1. In Release 2, Version 3, this feature was enhanced to allow the attendant in a Main/Satellite configuration to use DXS (Direct Extension Selection) to reach stations on the satellite switch when a 4-digit dialing plan is used.

CONSIDERATIONS

Trunk Queuing

Calls should not be permitted to queue on Main/Satellite trunk groups. There should be enough of these trunks so that queuing is not necessary.

Switch Applications

The following switches can function as a Main:

- System 85
- DIMENSION Systems
- System 75, Release 1, Version 2 and later.

Any release and version of DIMENSION System, System 75, or System 85 switch can function as a satellite or tributary.

INTERACTIONS WITH OTHER FEATURES

The following System 85 features affect or are affected by the operation of this feature.

Station Features Limited to Local Switch

The following station (or terminal) features, when provided, can only be used on the switch (main or satellite) where a call originates (not between switches). For example, a station assigned to satellite ''A'' can forward calls to another station on that switch, but it cannot forward calls to a station assigned to satellite ''B.'' The use of a Main/Satellite arrangement in a DCS (Distributed Communications System) alters some of these specific interactions. See the DCS feature for these exceptions.

- Automatic Callback
- Bridged Call
- Call Coverage
- Call Forwarding
- Call Pickup
- Call Waiting
- Code Restriction
- Distinctive Ringing
- Hunting
- Intercom
- Loudspeaker Paging
- Manual Signaling
- Message Center
- Override
- Personal Central Office Line
- Priority Calling

- Ringing Transfer
- Station Message Detail Recording
- Terminal Busy Indication
- Toll Restriction
- Voice Terminal Restrictions
  - — Inward
  - — Origination
  - — Outward
  - — Termination.

Attendant Features Limited to Local Switch

The following attendant features, when provided, only apply to terminals or trunks assigned to the local switch:

- Attendant Display
  - — Calling Number Display to Attendant
  - — Class of Service Display to Attendant
  - — Incoming Call Identification
  - — Trunk Identification
- Attendant Call Waiting
- Attendant Control of Trunk Group Access
- Attendant Control of Voice Terminals
  - — Outward Restriction
  - — Terminal-to-Terminal Restriction
  - — Termination Restriction
  - — Total Restriction
- Attendant Direct Extension Selection With Busy Lamp Field*
- Attendant Direct Trunk Group Selection
- Busy Verification of Lines
- Intercept Treatment—Attendant

* The limitation of Attendant DXS to local stations is removed in Release 2, Version 3, and later switches when a 4-digit dialing plan is used.

- Multiple Listed Directory Numbers
- Preselected Call Routing
- Serial Calls
- Timed Recall on Outgoing Calls
- Trunk Group Busy/Warning Indicators
- Trunk Verification.

Attendant Direct Extension Selection With Busy Lamp Field

An attendant for a Main/Satellite complex with extension number steering can use this feature to place a call to a distant switch. However, the busy lamp associated with the extension number does not light.

Call Coverage

Call Coverage cannot redirect a call over a tie trunk. Therefore, a terminal user at a satellite location cannot provide coverage for a terminal user at the main.

CAS (Centralized Attendant Service)

A Main/Satellite complex cannot have Centralized Attendant Service. If a satellite location in a Main/Satellite arrangement is also translated as a branch location in a CAS arrangement, neither feature will work properly. (Tie trunks in the network will lock up.)

DDC (Direct Department Calling) and UCD (Uniform Call Distribution)

Extension numbers that use extension number steering cannot be the controlling extension for a UCD (Uniform Call Distribution) or DDC (Direct Department Calling) group.

ISDN (Integrated Services Digital Network)/PRI (Primary Rate Interface)

The Main/Satellite/Tributary networking feature is not compatible with the ISDN/PRI feature. That is, ISDN trunking arrangements cannot be used within a Main/Satellite or Tributary network. The Main (assuming it is a System 85, Release 2, Version 4, switch) can use the ISDN/PRI feature to terminate trunks from outside the network (private or public network trunks), but ISDN service cannot be used within the Main Satellite or Main Tributary network. See also the interaction discussion for the DCS feature.

Last Extension Dialed

The Last Extension Dialed feature cannot be used for calls to DCA (Data Communications Access) trunk groups that use extension number steering.

Modem Pooling

Data calls placed through main/satellite arrangements over analog tie trunks require Modem Pooling connections at each end of the call where digital facilities are used. A data call to or from a DCP-interfaced endpoint at a main or satellite switch must be supported by Modem Pooling. Modem Pooling at the main cannot provide conversion for a data endpoint at a satellite location.

Multiple Listed Directory Numbers

If a Main/Satellite complex uses single-digit steering, the LDN (Listed Directory Number) at the main should not begin with the same first digit that is assigned to a Main/Satellite trunk group. Furthermore, LDNs should not begin with a digit assigned to a feature dial access code. The exception is the attendant access code. The leading digit(s) of an LDN can be the same as the attendant access code. Likewise, an LDN can have the same leading digit(s) as local extension numbers.

Queuing

When a Main/Satellite complex serves as an access arrangement for an ETN, the tandem switch and the main switch can both have ringback queuing. However, a single queue (located at the tandem) serves both switches. If the tandem switch attempts to ringback a local terminal user (no tie trunk involved), the switch ignores certain features. These features are:

- Call Forwarding—Follow Me
- Call Forwarding—Busy and Don’t Answer
- Call Pickup
- Call Waiting
- Call Coverage
- Hunting.

When a tandem or main routes a ringback call to a subtending location by way of a tie trunk, the preceding features work normally. The reason is that the subtending switch sees the call as an ordinary incoming tie trunk call.

Tenant Services

A partitioned System 85 can serve as a satellite or a tributary in a Main/Satellite/Tributary arrangement. As long as the partitioned switch is serving as an endpoint in the arrangement, an extension partition and optional attendant partition within the partitioned switch can access the main over dedicated trunk groups. However, a partitioned System 85 should not serve as the main. When this is done, the main does not provide trunk-to-trunk partitioning to the public or private network.

HARDWARE REQUIREMENTS

None.

FEATURE ADMINISTRATION

Assignment of the Main/Satellite/Tributary feature is on a per-switch basis. The customer can partially administer this feature using the SMT (System Management Terminal). This feature can also be administered using CSM (Centralized System Management).

To administer AAR/ARS routing patterns for a Main/Satellite/Tributary complex, refer to the Feature Administration section of those feature descriptions.

The following are the MAAP and SMT procedures.

MAAP AND SMT PROCEDURES — MAIN/SATELLITE			
PROCEDURE	**WORD**	**PURPOSE**	**SMT**
104	1 & 2	Administers Main/Satellite network and trunk group parameters including ETA (Extended Trunk Access) and Remote Dial Transfer.	No
275	1,2,3,4	Administers system class-of-service parameters.	Yes
350	1	Assigns the first digit of a feature dial access code, trunk dial access code, or extension number. The call type for extension numbers that use extension number steering must be ‘‘Extension Number.’’	No
350	2	Administers trunk and feature dial access codes.	No
354	1	Administers blocks of extension numbers for extension number steering.	No
354	2	Assigns an extension number or an extension number steering code to a dial access code.	No

The following are the applicable CSM Command Paths utilizing the **admin** area of TCM or FM.

CSM SCREENS — MASKS MAIN/SATELLITE		
APPL'N	**OBJECT**	**PURPOSE**
FM	trk-grp	Administers Main/Satellite network and trunk group parameters which include: ETA (Extended Trunk Access), Remote Dial Transfer, number of digits sent, transfer type, flash hook detected, if a prefix is deferred, and what the prefix digits will be.
TCM/FM	sys-cos	Administers the system class-of-service parameters.
TCM/FM	first-digit	Assigns the first digit of a feature dial access code, trunk dial access code, or extension number. The call type for extension numbers that use extension number steering must be ''Extension Number.''
TCM/FM	dial-access-code	Administers trunk and feature dial access codes.
TCM	number-groups	Administers blocks of extension numbers for extension number steering.
TCM	dac-to-extension	Creates an association between an extension and a DAC. When an extension is associated with a DAC or RNX, the extension is then in an extension number steering state.
FM	station-no-steering	Creates an association between an extension and an RNX. When an extension is associated with a DAC or RNX, the extension is then in an extension number steering state.

MALICIOUS CALL TRACE

DESCRIPTION

The MCT (Malicious Call Trace) feature allows the customer to obtain information that may identify the calling party of a malicious call. This feature is useful for tracing the source of bomb threats, menacing calls, and obscene calls, and is especially desirable when these types of calls are more than a rare occurrence. Organizations that may wish to use the Malicious Call Trace feature include: airlines, corporations, government agencies, and universities.

Activation and Control of a Trace

The Malicious Call Trace feature can be activated from any voice terminal or attendant console in the switch. However, this feature is assigned to voice terminal classes of service as a way of preventing accidental or mischievous activation.

Attendant Alerting

When the Malicious Call Trace feature is activated, every attendant on the local DCS (Distributed Communications System) node is alerted that there is a malicious call that needs to be traced. In a *partitioned System 85 (Tenant Services)*, every attendant in Partition 0 is alerted to trace the malicious call. While the attendants are being alerted, trace information is stored and a voice recorder is connected to the malicious call.

Controlling Attendant

The first attendant to respond to this alert acts as the controlling attendant who performs the trace, and subsequently deactivates the feature. The controlling attendant could be the person who activated the MCT feature or another attendant.

> **NOTE:** The recorder is connected, and the trace information is stored regardless of whether an attendant takes control.

During the trace, the controlling attendant receives the trace information on the console's 8-character alphanumeric display. An ordered list of the information displayed is shown in Table 75-A.

Switch Response

When the MCT feature is activated, the switch gathers the trace information and all equipment used to make the call is held up (i.e., cannot be disconnected) until this feature is deactivated. For example, the

system would hold up the called parties' extension and the trunk used in a malicious call that originated at another switch. If a third party is connected to this call when the MCT feature is activated, the third party's equipment (trunk or extension) will be held up until the MCT feature is deactivated.

Table 75-1. Format of the Controlling Attendant's 8-Character Display

ITEM	DEFINITION	POSSIBLE OR SAMPLE DISPLAYS
1	Identification of Called Party	67257 (voice terminal extension), or CONSOL1 (attendant)
2	Source of Malicious Call	LINE, or TRUNK, or ISDNCALL
3	Identification of Malicious Caller	65423 (extension), or 0112182 (7-digit equipment location), or 212 2745843 (10-digit ISDN number)
4	Called Party's Status	ACTIVE*, or IDLE
5	Type of Third Party (if applicable)	3RDLINE, or 3RDTRUNK
6	Third Party Identification (if applicable)	67743 (extension), or 0213163 (trunk equipment location)
7 or 5	Identification of Activating Party	67257 (called extension), or 67266 (neighbor), or CONSOL1 (called attendant)
8 or 6	Identification of Voice Recorder	0022051 (7-digit equipment location), or NO REC (no voice recorder)
9 or 7	End of Trace Information	END

* Whenever the controlling attendant is also the called party, this display will show ''ACTIVE.''

Feature History and Development

The Malicious Call Trace feature is first available for System 85 in Release 2, Version 4.

USER OPERATIONS

To Activate Malicious Call Trace From a Multiappearance Voice Terminal Without an EMERGNCY Button:

- Be sure you are active on a malicious call.
- Press the CONFERENCE, TRANSFER, or HOLD button* to place the malicious call on hold. [The calling party is placed on hard hold, and hears silence or music (if Music-on-Hold is administered).]

* CONFERENCE or TRANSFER is the recommended method. If all multiple line appearances are active (or fluttering), the operation for activating MCT (Malicious Call Trace) is like the one used by a neighboring voice terminal.

- Select a new line appearance.
- Dial the MCT Emergency access code. [Second dial tone]
- Press the ‘‘#’’ button. [The switch returns confirmation tone. The attendants are alerted to trace the call. Trace information is stored. A voice recorder is activated.]
- Press the appropriate appearance button to return to the held call,

  or

- Go on-hook.

To Activate Malicious Call Trace From a Multiappearance Voice Terminal With an EMERGNCY Button:

- Be sure you are active on the call that you determined to be a malicious call.
- Press the EMERGNCY button. [The green status lamp lights. The attendants are alerted to trace the call. Trace information is stored. A voice recorder is activated.]

To Activate Malicious Call Trace From a Rotary Voice Terminal:

- Be sure you are active on a malicious call.
- Momentarily press the switchhook. [The switch returns recall dial tone. The calling party is placed on soft hold and hears silence.]
- Dial the MCT Emergency access code. [Second dial tone]
- Momentarily press the switchhook again. [The switch returns confirmation tone. The attendants are alerted to trace the call. Trace information is stored. A voice recorder is activated.]
- Momentarily press the switchhook to return to the held call,

  or

- Go on-hook.

To Activate Malicious Call Trace From a Touch-Tone Voice Terminal:

- Be sure that you are active on the call which you determined to be a malicious call.
- Press the RECALL button (if provided),

  or

- Momentarily press the switchhook. [The switch returns recall dial tone. The calling party is placed on soft hold and hears silence.]

- Dial the MCT Emergency access code. [Second dial tone]
- Press the ‘‘#’’ button. [The switch returns confirmation tone. The attendants are alerted to trace the call. Trace information is stored. A voice recorder is activated.]
- Press the RECALL button or momentarily press the switchhook to return to the held call,

or

- Go on-hook.

To Activate Malicious Call Trace for a Neighboring Voice Terminal:

- Be sure a neighboring voice terminal user is receiving a malicious call.
- Go off-hook. [Dial tone]
- Dial the MCT Emergency access code. [Second dial tone]
- Dial the neighbor’s extension number. [The switch returns confirmation tone. The attendants are alerted to trace the call. Trace information is stored. A voice recorder is activated.]
- Go on-hook.

To Activate Malicious Call Trace From an Attendant Console:

- Be sure you are active on a malicious call.
- Press the MCT EMERGENCY ACTIVATE button. [The POS BUSY lamp lights. The attendants are alerted to trace the call. Trace information is stored. A voice recorder is activated.]
- Do one of the following options.

Option One:

- Allow another attendant to press the MCT CONT button and to act as the controlling attendant. [The activating attendant has a talking connection with the malicious caller. The controlling attendant does not.]
- Continue to monitor the malicious call.
- After the calling party disconnects, press the RELEASE button.

NOTE: This is the recommended attendant operation.

Option Two:

- Press the MCT CONT button to act as both the activating and the controlling attendant. [The attendant maintains a talking connection with the malicious caller.]
- While tracing the malicious call, continue to monitor the call.*
- After the calling party disconnects, press the RELEASE button.
- After tracing the call, deactivate the Malicious Call Trace feature.*

Option Three:

- Ignore the call and return to normal activity. To do this, press the RELEASE button and then the POS BUSY button. [Talking connection with the malicious caller ceases, and the POS BUSY lamp goes out.]

* Refer to the operation for tracing a malicious call.

To Trace a Malicious Call:

When the MCT feature is activated, the MCT CONT lamp flashes at every attendant console. The first attendant to press this button is the *controlling attendant*. The controlling attendant is responsible for tracing the malicious call. The controlling attendant should:

- Press the MCT CONT button. [Audible signal (ringback) stops, MCT CONT lamp continues to flash, the POS BUSY lamp lights, and the first ICI (Incoming Call Identification) message is displayed. Unless this attendant also activated the feature, there is no talking connection with the malicious caller.]
- Record the ICI 8-character display. Examples are shown in Table 75-A.
- Press the MCT CONT button to receive each subsequent display, and record the information. (This process is finished when the ICI display shows ''END.'')
- If the call arrived over a trunk, call the Central Office or the distant private network node to continue the trace at that location. [The distant attendant should have a cross-reference and be able to find the corresponding equipment location at the distant switch. This is described further in ''Considerations''.]
- While the call is being traced, the controlling attendant can place the console into normal operation by doing the following. (If the controlling attendant is also the activating attendant, the attendant should continue to monitor the call until the trace is finished.)
  a. Place the MCT switch loop on hold.
  b. Press an idle loop. [The console is no longer locked up.]
- When the trace is finished, the information has been recorded, and the malicious call has completed; deactivate the MCT feature.*

To Deactivate the Malicious Call Trace Feature

CAUTION: Deactivating the MCT feature will disconnect the voice recorder and all talking parties.

The controlling attendant should:

- Press an idle loop button. [ATND lamp lights.]
- Press the START button. [Dial tone]
- Dial the MCT Deactivate access code. [MCT CONT quits flashing, the voice recorder is deactivated, and POS BUSY lamp goes out.]

* Refer to the operation for deactivating a malicious call.

If the controlling attendant is also the activating attendant, do the following:

- Place the MCT loop on hold.
- Press an idle loop button. [ATND lamp lights.]
- Press the START button. [Dial tone]
- Dial the MCT Deactivate access code. [MCT CONT quits flashing, the voice recorder is deactivated, and POS BUSY lamp goes out.]

CONSIDERATIONS

Cross-Reference of Trunk Equipment Locations

During the tracing of a malicious call, System 85 provides an ICI display of the equipment location of the incoming trunk (when ISDN information is not received, or when the malicious call did not originate from within a DCS network). In order for this information to be useful, each attendant should be supplied with an up-to-date cross-reference of the equipment location of each incoming (and 2-way) trunk circuit in the local switch and the corresponding equipment location at the distant switch. It would also facilitate the trace to provide a third column in the cross-reference containing an appropriate telephone number to the distant switch. In this way, a controlling attendant is provided with the necessary information to easily extend the trace.

It might also be useful for the switch administrator to keep a cross-reference between the equipment locations of SN231 recorder trunks and the corresponding voice recorders. During the trace, the switch provides the equipment location of the seized auxiliary trunk (i.e., the recorder trunk; Item 8 or 6 of Table 75-A). So, the cross-reference would facilitate the process of obtaining the appropriate tape.

Deactivating From an Accidentally Activated Trace

If a voice terminal user erroneously activates a Malicious Call Trace, the method of deactivation depends on whether the activation is with a single-appearance or a multiappearance terminal.

Single-Appearance Terminal — A second switchhook flash or Recall press before or after time-out to confirmation tone activates Malicious Call Trace. To deactivate the trace, hang up before confirmation tone.

Multiappearance Terminal — To deactivate the trace, return to held appearance before time-out to confirmation tone.

Once confirmation tone is heard, the only way to deactivate the feature is to have an attendant on the switch deactivate this feature.

Dial Access Activation

When a voice terminal user activates Malicious Call Trace toward the user's own extension number with the dial access code, there are three legitimate responses when the switch returns the second dial tone:

- The recommended (and quickest) response is to momentarily press the switchhook.
- If that is not possible, press the ''#'' button. In this way, the amount of dialing is minimal and activation is immediate.

- A third acceptable response is to dial the user's own extension number. This method requires extra dialing and is somewhat slower.
- The fourth acceptable response is to do nothing. When time-out occurs (in approximately 10 seconds), the switch infers that activation is toward the user's own extension number.

Disconnecting All Parties

Once a Malicious Call Trace is activated, controlled, and deactivated, all previously connected parties are disconnected. This releases all held up equipment.

Freeing the Activating Attendant's Console

If a Malicious Call Trace is activated from one attendant's console but is controlled from another console, the activating attendant's console is locked up. Place the MCT switch loop on hold and press an idle loop on the activating console to allow further call processing.

Legal Considerations

Laws governing the use of the Malicious Call Trace feature vary in different locations and are subject to change. It is the responsibility of the customer's switch administrator to understand and comply with the applicable regulations.

Multiple Appearances of an Extension

Users with more than one active appearance of their own extension numbers can activate Malicious Call Trace toward their own extensions using the dial access code. In this situation, when a user presses the CONFERENCE, TRANSFER, or HOLD* button before dialing the MCT access code, the switch presumes that the appearance that was *just placed on hold* (as a result of the CONFERENCE, TRANSFER, or HOLD activation) is the appearance to which Malicious Call Trace *is being activated.*

The user of a neighboring voice terminal is not allowed to activate Malicious Call trace toward another extension with more than one appearance active (or fluttering). In this situation, the switch has no way of knowing for which appearance actually has the malicious caller on it. When this is attempted, the switch returns intercept tone.

On stations that receive more than one malicious call, the MCT feature can be activated toward more than one appearance of an extension. As long as there is no ambiguity during *each* activation, Malicious Call Trace could be activated toward every call on a multiappearance voice terminal.

Periodic Check of Voice Recorders

Since this feature does not provide electronic monitoring of tape availability, the voice recorder(s) should be checked regularly to ensure there is plenty of tape available for recording malicious calls.

---

* CONFERENCE or TRANSFER is the recommended method. If all multiple line appearances are active (or fluttering), the operation for activating MCT is like the one used by a neighboring voice terminal.

Published Numbers and Malicious Call Trace

For many applications of this feature, malicious calls tend to be placed by individuals outside the organization. These people are likely to place malicious calls to numbers found in the public directory. When this is the case, attendants, ACD agents, and other voice terminal users answering calls directed to published numbers should be equipped with a feature (EMERGENCY ACTIVATE) button for convenient activation of Malicious Call Trace.

Switch Capacity

System 85 software allows as many as 15 malicious calls to be traced at any one time. As soon as MCT is activated, all ICI data is stored and a Voice Recorder is connected to the call. This information is maintained until an attendant takes control and eventually deactivates MCT for that call. However, if an attendant is not available to control the MCT and read the ICI data, there will be a delay in identifying the caller — especially if a distant operator must be called to trace the call through another switch.

Hard and Soft Processor Swaps

The contents of the MCT trace information are stored in a status portion of switch memory. Therefore, if a hard swap occurs before or while the controlling attendant is reviewing the ICI data, the unread part of the trace information is lost.

INTERACTIONS WITH OTHER FEATURES

Attendant Auto-Manual Splitting

If an attendant activates Malicious Call Trace while a calling party is split from the console, the split condition is disabled. On the attendant console, the split lamp goes out. For the previously split party, the switch returns dial tone to an internal caller or disconnects an outside caller from the switch.

Attendant Interposition Calling and Transfer

If an attendant selectively calls the activating or the controlling attendant during an active Malicious Call Trace, the switch returns ringback to the calling attendant. However, the called attendant will only receive ringing if the attendant has unbusied the console.

For the controlling attendant, priority lamp activity is provided for interposition calls during a trace. However, the controlling attendant does not receive an ICI display for these calls. Instead, the alphanumeric display is reserved for displaying trace information.

For the activating attendant to receive an interposition call, the malicious caller must be placed on hold, and the console must be unbusied. Then, an interposition call will cause the loop lamp to flash and the PR lamp to go out.

ACD (Automatic Call Distribution)

If an ACD agent receives a malicious call, the Malicious Call Trace feature can be activated by the ACD agent. It is preferable, when malicious calls are more than a rare occurrence, to assign the EMERGNCY button to every agent's multiappearance voice terminal.

If an ACD agent receives a malicious call and activates the Malicious Call Trace feature while the agent is being observed using service observing (as opposed to Agent Override), the observer may continue to monitor the malicious call and subsequent calls normally. Furthermore, service observing allows the observer to *begin observation* after Malicious Call Trace has been activated.

City/Queue-of-Origin Announcement: An ACD agent cannot activate Malicious Call Trace during a city-of-origin or a queue-of-origin announcement. When this 2-second announcement finishes, the trace can be activated.

CMS (Call Management System): With CMS, ''agent is on MCT'' messages are sent to the processor (3B or AP 16) and interpreted as EXCEPTION messages by the CMS software. An Exception Message will appear on any real-time report displaying data for that split.

Agent Override: If an Agent Override call is attempted toward a line involved in a Malicious Call Trace, the malicious caller receives intercept tone.

Call Waiting

Calls are not allowed to wait on a line involved in a Malicious Call Trace. Instead, the calling party receives busy tone.

CAS (Centralized Attendant Service)

A malicious call placed to a branch location in a CAS arrangement cannot be controlled by a CAS attendant at the main switch. However, when the MCT feature is assigned at a branch location, malicious calls can be controlled by a special services attendant at the branch location if one is assigned.

A malicious call placed to the main location in a CAS arrangement can be controlled by a CAS attendant at the main switch.

Conference—Three Party

When Malicious Call Trace is activated during a 3-party conference, the malicious caller's identity in the trace information becomes uncertain. The contents of Items 2 and 5 and of Items 3 and 6 in the controlling attendant's display can be reversed.

If there is one (and only one) party in the 3-party conference who is connected to the switch over an incoming trunk. The MCT software presumes that this party is the malicious caller. This party is identified as the malicious caller in Items 2 and 3 of the controlling attendant's display.

Sometimes, this ambiguity can be avoided with human intervention. Since the malicious caller usually initiates a malicious call, the originally called party can press the DROP button to disconnect the third party in the conference, verify that the malicious caller is still on the connection, and then quickly activate the trace. (However, when this is done, the third party cannot be readded to the conference.)

Dial Access to Attendant

If a voice terminal user selectively calls the activating or the controlling attendant during an active Malicious Call Trace, the call is denied. The switch returns busy tone to the calling party. A controlling attendant unbusying his or her console will receive the call without disturbing the ICI display that contains the trace information.

DCS (Distributed Communications System)

If a malicious call originates from a voice terminal from within the DCS network, the ICI display on the controlling attendant console displays the extension number of the calling voice terminal. Beyond this functionality, DCS transparency is not provided for the Malicious Call Trace feature.

A voice terminal user cannot activate Malicious Call Trace unless an attendant is in the same DCS node as the user. Also, a third party cannot activate the feature unless the third party is in the same node as the user.

When Malicious Call Trace is activated in a DCS environment, every System 85 attendant in the local DCS node is alerted to trace the call.

ISDN (Integrated Services Digital Network)

When a trace is performed toward a malicious call that came in over ISDN facilities and the ISDN facilities deliver the calling number to the local System 85, the ICI display on the controlling attendant console will display the 10-digit calling number. The first three digits are displayed first followed the last seven digits.

Music-on-Hold Access

When Malicious Call Trace is activated on a switch that provides Music-on-Hold, the originator of the malicious call receives music whenever this caller is placed on hard hold. This effect usually occurs when Malicious Call Trace is activated from a multiappearance voice terminal using the dial access code.

If this functionality is considered unacceptable, there are several ways to attenuate or circumvent the problem. To minimize the caller's alarm, the person activating Malicious Call Trace can advise the caller, ''I need to put you on hold for a short time. I'll be right back.'' Other alternatives are to provide MCT ACTIVATE buttons for voice terminals that are likely to receive malicious calls, or to activate Malicious Call Trace from a neighboring voice terminal. If the previous alternatives are considered unacceptable, Music-on-Hold can be disabled using Procedure 275, Word 1.

Override

If an Override call is attempted toward a line involved in a Malicious Call Trace, the calling party receives busy tone.

Priority Calling

If a priority call is attempted toward a line involved in a Malicious Call Trace, the calling party receives busy tone.

Tenant Services

An attendant in any attendant partition or a voice terminal user in any extension partition can activate the Malicious Call Trace feature in response to a malicious call.

When Malicious Call Trace is activated in a partitioned switch, only the attendants in Partition 0 are alerted to the malicious call.

Voice recorder trunks are not partitioned. These trunks, when available, are equally accessible to any partition needing them.

Timed Recall on Outgoing Calls

During a malicious call, the Timed Recall feature is deactivated for a trunk that is involved in the malicious call.

The activating console receives modified Timed Recall operation during a Malicious Call Trace. If the activating console is position busy, the Priority lamp lights during a timed recall, but the tone does not sound. If the console is not position busy, the Priority lamp lights and the tone sounds during a timed recall.

The controlling console also receives modified Timed Recall operation during a Malicious Call Trace. While the controlling attendant is performing the trace, the Priority lamp lights during a timed recall, but the tone does not sound. After the trace is deactivated, the Priority lamp lights and the tone sounds for a timed recall.

Timed Reminder

The activating console receives modified Timed Reminder operation during a Malicious Call Trace. While the activating attendant is connected to the malicious call, the Ring lamp flashes during a timed reminder, but the tone does not sound. After the activating attendant disconnects from the malicious call, the Ring lamp flashes and the tone sounds during a timed reminder.

The controlling console also receives modified Timed Reminder operation during a Malicious Call Trace. While the controlling attendant is performing the trace, the Ring lamp flashes during a timed reminder, but the tone does not sound. After the trace is deactivated, the Ring lamp flashes and the tone sounds during a timed reminder.

Trunk Verification—Attendant

The Trunk Verification—Attendant can assist in tracing malicious calls that originate from or tandem through distant switches in the private network. After an attendant at the distant switch is called by the controlling attendant at the local switch, the distant attendant can enter the call using the Trunk Verification—Attendant feature and then activate Malicious Call Trace at the distant end.

> **NOTE:** Since the warning tone provided by trunk verification could arouse suspicion by the malicious caller, the verification should be deactivated as quickly as possible.

Unattended Console Service—Alternate Console Position

While the Alternate Console Position feature is activated, the alternate attendant position (instead of the regular attendant position) is alerted to trace malicious calls. If the alternate attendant responds to an alert first (by pressing the MCT CONT button), this attendant can also trace the call.

Unattended Console Service—Call Answer From Any Voice Terminal

While the CAAVT (Call Answer From Any Voice Terminal) feature is active, the switch does not sound the CAAVT signaling device in response to a malicious call. Instead, the switch will activate a voice recorder and alert the attendant consoles in the normal manner. After an attendant returns to an attendant position, the trace can be performed and the MCT feature can be deactivated.

Unattended Console Service—Preselected Call Routing

While the Preselected Call Routing feature is active, preselected voice terminals are not alerted to trace malicious calls. Instead, the switch will activate a voice recorder and alert the attendant consoles in the normal manner. After an attendant returns to an attendant position, the trace can be performed and the MCT feature can be deactivated.

Visually Impaired Attendant Service

A visually impaired attendant should not attempt to trace a malicious call. The controlling attendant must be able to see and record the ICI messages. Also, the controlling attendant must be able to read and communicate the information from the cross-reference of trunks.

RESTRICTING FEATURE USE

Voice terminal users can be prevented from inadvertently or mischievously activating Malicious Call Trace by denying access in the class-of-service. This is done with the Restrictions — Voice Terminal Restrictions feature, using Procedure 010, Word 2.

HARDWARE REQUIREMENTS

The following special hardware is required for the Malicious Call Trace feature.

- Attendant consoles with 8-character alphanumeric displays.

  An attendant console with 8-character display is needed to perform the control functions needed for Malicious Call Trace.

- Voice Recorder

  This is CPE (Customer Provided Equipment) used to record malicious calls. The recorder selected must be suitable for remotely controlled operations. It should have an automatic gain control or have a recording level adjustment that can be set to an appropriate level.

- SN231 Auxiliary Trunk Circuit

  An auxiliary trunk circuit on an SN231 circuit pack is required for each voice recorder (four circuits per SN231). An auxiliary trunk circuit provides the switchable talking path between the malicious call and the recorder. When MCT is activated, the SN231 passes audio signals and on/off control to the recorder via the 278A interface.

  Each trunk port on this circuit pack used for this feature should be optioned (assigned) as a 1-way outgoing and 4-wire signaling trunk.

- 278A Adapter

  One 278A Adapter is needed for each voice recorder. This unit is recommended because it provides isolation between SN231 trunk equipment and the recorder. Without the 278A, there is no protection on the Audio Path from power surges.

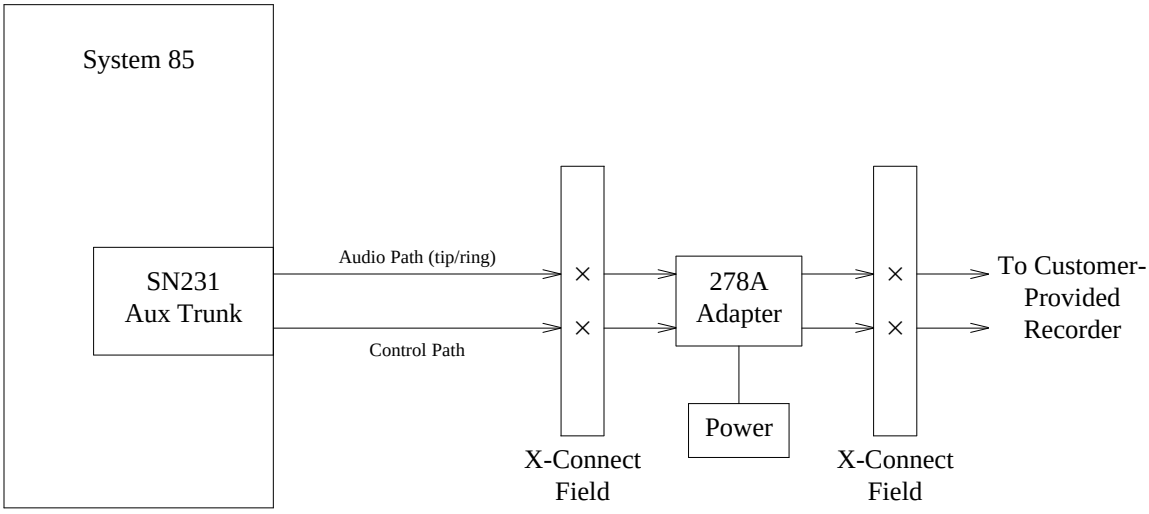

Figure 75-1. Malicious Call Trace Hardware Configuration

The 278A has two options and both can protect the audio path on the trunk circuit. The C1/C2 option is the recommended option because it has 17 ohms of resistance in series with its relay contacts that provide current-limiting protection to the trunk circuit. If the recorder is unable to work with this resistance (impedance) to the microphone input of the recoder, use the following option. The BY1/BY2 option does not have current-limiting protection but has approximately zero ohms of resistance (impedance) to the microphone input.

The 278A can be mounted in the Auxiliary Cabinet or wall mounted next to the cross-connect fields.

- Power

  A D-181321 power kit is required for each 278A control unit. This unit converts -48 V dc to -24 V dc power. If the 278A is wall mounted, then it should be powered by a plug-in wall power supply (KS-22911L1). If the 278A is installed in the Auxiliary Cabinet, use cabinet power. In either case, the ground lead which goes to the 278A should eventually be attached to the single-point ground in the equipment room.

FEATURE ADMINISTRATION

The Malicious Call Trace feature is assigned using the MAAP (Maintenance and Administration Panel) on a per-voice terminal and voice terminal class-of-service basis. The customer can partially administer this feature using the SMT (System Management Terminal). This feature can also be administered using CSM (Centralized System Management).

The following are the applicable MAAP and SMT procedures.

MAAP AND SMT PROCEDURES — MALICIOUS CALL TRACE			
PROCEDURE	**WORD**	**PURPOSE**	**SMT**
000	1	Assigns the voice terminal class of service to an extension number.	Yes
010	2	Assigns the ability to activate Malicious Call Trace to a voice terminal class of service.	Yes
054	2	Assigns the EMERGNCY button to a multiappearance voice terminal. The applicable encode is as follows: 9 Malicious Call Trace.	Yes
100	1	Assigns the trunk-group dial access code and trunk type of a voice recorder (auxiliary) trunk to its trunk-group number.	No
150	—	Assigns the SN 231 equipment location to the trunk-group number administered in Procedure 100, Word 1.	No
203	1	Assigns the MCT—Activate and the MCT—Control buttons to the attendant console(s). The applicable encodes are as follows: 48 MCT—Activate 49 MCT—Control.	No
350	1	Assigns the first digit of the Malicious Call Trace feature dial access codes (if required).	No
350	2	Assigns the Malicious Call Trace dial access codes. The applicable encodes are: 99 MCT — Deactivation 100 MCT — Activation.	No

The following are the applicable CSM Command Paths utilizing the **admin** area of TCM or FM.

CSM SCREENS — MASKS MALICIOUS CALL TRACE		
APPL'N	**OBJECT**	**PURPOSE**
TCM	extension	Assigns the voice terminal class of service to an extension number.
TCM	class-of-service	Assigns the ability to activate Malicious Call Trace to a voice terminal class of service.
TCM	This command will be set type: i.e., 36-button, 12-button, bct, data-module, feature-module, coverage-module, or vds.	Assigns the EMERGENCY button to a multi-appearance voice terminal.
FM	trk-grp	Assigns the trunk group dial access code and the trunk type of a voice recorder to the trunk-group number, and assigns an equipment location to a trunk group.
TCM	control-keys	Administers the MCT—Activate and the MCT—Control buttons to the attendant console(s).
TCM/FM	first-digit	Assigns the first digit of the Malicious dial access codes (if required).
TCM/FM	dial-access-code	Assigns the Malicious Call Trace dial access codes.

MANUAL SIGNALING

DESCRIPTION

This feature allows a multiappearance terminal user to signal a preselected multiappearance terminal. Each button press at the calling terminal causes one short beep at the called terminal. This feature may be used in conjunction with the Manual Intercom feature to provide signaling.

Manual Signaling can also be used to signal a preselected *group* of voice terminals. In this way, a message can be quickly and effectively conveyed (e.g., ‘‘Departmental meeting is convening’’) to an organized group of individuals.

Feature History and Development

This feature was first available on System 85 in Release 1. There have been no changes to this feature since its introduction.

USER OPERATIONS

The following is the user operating procedure for this feature.

To Signal a Terminal(s):

- Press SIGNAL. [Tone is generated at the signaled terminal(s).]

CONSIDERATIONS

Manual Signaling Tone
: The tone is a 750-hertz buzzing tone.

Feature Parameters
: It is recommended that one button signal no more than 17 multiappearance terminals. Each Manual Signaling pair [i.e., association of a signaling terminal and the signaled terminal(s)] requires a separate signaling button.

Straight Line Sets
: Straight line sets cannot be assigned as either the signaling or a signaled terminal in a Manual Signaling pair. When this is attempted, an administration error will occur in Procedure 053, Word 1.

INTERACTIONS WITH OTHER FEATURES

The following System 85 features affect or are affected by the operation of this feature.

Intercom—Automatic

When Automatic Intercom ringing is in progress, Manual Signaling is prevented. Broken fluttering on the Manual Signaling status lamp is used to convey the denial.

Intercom—Dial

When Dial Intercom ringing is in progress, Manual Signaling is prevented. Broken fluttering on the Manual Signaling status lamp is used to convey the denial.

Ringing—Ringing Cutoff

Ringing Cutoff denies Manual Signaling for the given terminal.

Ringing—Distinctive Ringing

When Distinctive Ringing is in progress, Manual Signaling is denied. Broken fluttering on the Manual Signaling status lamp is used to convey the denial.

Tenant Services

There are no tests in Procedure 053, Word 1 to ensure that the members of a Manual Signaling pair belong to the same extension partition. It is the responsibility of the system manager to ensure that Manual Signaling pairs do not cross partition boundaries.

HARDWARE REQUIREMENTS

Multiappearance voice terminals are required for this feature.

FEATURE ADMINISTRATION

Assignment of the Manual Signaling feature is on a per-terminal basis. The customer can fully administer this feature using the SMT (System Management Terminal) or the TCM (Terminal Change Management) feature. This feature can also be administered using CSM (Centralized System Management).

The following is the applicable MAAP and SMT procedure.

MAAP AND SMT PROCEDURE — MANUAL SIGNALING			
PROCEDURE	**WORD**	**PURPOSE**	**SMT**
053	1	Assigns the Manual Signaling button to a multiappearance voice terminal. Also, the procedure associates a signaling terminal with a signaled terminal(s).	Yes

The following are the applicable TCM path names used with the AP 16.

TCM SCREEN — MANUAL SIGNALING	
PATH NAME	**PURPOSE**
terminal-change terminal buttons	Assigns the Manual Signaling button to a multiappearance voice terminal.
terminal-change terminal manual-signaling	Associates the signaled terminal(s) with a signaling terminal.

The following is the applicable CSM Command Path utilizing the **admin** area of TCM or FM.

CSM SCREEN — MASK MANUAL SIGNALING		
APPL'N	**OBJECT**	**PURPOSE**
TCM	This command will be set type: i.e., 36-button, 12-button, idt, pt510, bct, vds, feature-module, or coverage-module.	Assigns the Manual Signaling button to a multi-appearance voice terminal. Also, this command associates a signaling terminal with a signaled terminal(s).

MESSAGE WAITING

INTRODUCTION

Earlier issues of the Features Reference Manual listed only Message Waiting — Manual as a feature. Automatic message waiting was addressed as an attribute of the various System 85 messaging services. With the late addition of Audible Message Waiting to Release 2, Version 4, Message Waiting — Automatic has been upgraded to feature status. Within this addendum, Message Waiting — Automatic and Message Waiting — Manual share the same section number. However, these are two separate and distinct features and will each have their own section in future issues of the System 85 Features Reference Manual.

MESSAGE WAITING — AUTOMATIC

DESCRIPTION

Message Waiting—Automatic provides two ways of automatically notifying a user that a message is waiting to be retrieved from one or more of the System 85 messaging services. Two different message waiting indicators are used because not all voice terminals have the same alerting facilities. The Message Waiting — Automatic indicators should meet the needs of most System 85 users. The two Message Waiting — Automatic indicators are:

- Audible Message Waiting

  The audible message waiting indicator is a distinctive *stutter tone*, heard through the voice terminal ear piece or speaker for 2-seconds when the terminal first goes off-hook. This message waiting indicator can be used as follows:

  — For voice terminals that do not have a message waiting lamp

  — To supplement the function of an available message waiting lamp

  — To indicate messages waiting on an alternate extension.

  When this tone is heard, the user knows that there is a message waiting to be retrieved.

- Message Waiting — Lamp

  The message waiting — lamp is a green LED, usually located below and to the left of the voice terminal dialing pad. The message waiting lamp is available on all System 85 digital (7400D Series), hybrid (7300H Series), and the 7100A series analog voice terminals. The Z34A Message Waiting Indicator is available as a voice terminal adjunct that can be used with voice terminals that do not have an integral message waiting lamp. When the message waiting lamp is light, the user knows that a message is waiting to be retrieve.

Both forms, Audible Message Waiting and the Message Waiting Lamp, are fully compatible and can be used on the same voice terminal or even for the same extension if desired.

Basic Operation

The messaging service features of the System 85 notify the switch when a message is left for an extension. This is discussed in more detail in the Unified Messaging feature section. The switch then checks the translations for the called extension.

Message Waiting Lamp

If a message waiting lamp is assigned to that extension, call processing software sends the necessary control signals to light the message waiting lamp at the called voice terminal.

Audible Message Waiting

If audible message waiting is assigned, call processing software records the call waiting status for the called extension. When any appearance of the extension goes off-hook, the switch sends *Stutter Tone* to the extension for 2-seconds.

Note that these operations are **not** mutually exclusive. That is, the same extension can be alerted by both the message waiting lamp and by audible message waiting tone.

Canceling the Automatic Message Waiting Indicators

Under certain circumstances, the Leave Word Calling feature provides a means of canceling a message from the originating voice terminal when Leave Word Calling was used to create the message. However, as a general rule the automatic message indicators will remain in effect until all messages have been retrieved. This means that with the message waiting lamp, the lamp remains lit. With audible message waiting, the stutter tone is heard each time a voice terminal goes off-hook on the assigned extension.

Feature History and Development

The function of Message Waiting Automatic was first available with System 85, Release 2, Version 1, in the form of the message waiting lamp. In this form, it was considered part of the Leave Word Calling feature, and could be used only for local (on the same switch as the terminal users) messaging services. In Release 2, Version 3, the message waiting lamp became available to remote messaging services in a DCS (Distributed Communications System).

Audible Message Waiting is first available with Release 2, Version 4, Issue 1.1. With this enhancement, Message Waiting — Automatic was given separate feature status.

USER OPERATIONS

Placing an Automatic Message Waiting Call

The applicable user operations for the Message Waiting — Automatic feature depend on the System 85 messaging feature used.

For more detailed information on a specific messaging feature, see the **USER OPERATIONS** portion of the appropriate feature section (AUDIX or Leave Word Calling feature).

In addition to the System 85 messaging features, the AP adjunct feature Message Center Service can also be used to activate Message Waiting — Automatic and store messages for a voice terminal user.

In all cases, the function of the Message Waiting — Automatic feature is controlled by switch administration. The caller has no control over the type of message waiting indicator used.

Responding to Automatic Message Waiting

If your extension is assigned a *Message Waiting Lamp*, you should check the lamp frequently to see if it is lit. This is particularly important if you use the *Send All Calls* function of the Call Coverage feature or if your extension is part of a *Send All Calls Group*.

If your extension is assigned *Audible Message Waiting*, you can check for audible message waiting by going off-hook and listening for message waiting (stutter) tone. This should be done any time you have been away from your voice terminal. You should also check for message waiting tone periodically when you use the *Send All Calls* function of the Call Coverage feature or if you extension is a member of a *Send All Calls Group*.

For information on retrieving messages, see the USER OPERATIONS section of the applicable messaging or message service feature. These features include:

- AUDIX
- Call Coverage
- Display — Voice Terminal
- Leave Word Calling
- Unified Messaging.

CONSIDERATIONS

Message Center Service

Message Center Service is an AP feature that can communicate with the System 85 switch processor. When a message is left with a message center agent, the Message Waiting — Automatic feature can be used to alert the called party to retrieve the message.

Off-Hook Time Out Sequence

The 2-second stutter tone provided by audible message waiting does not add to the 10-second off-hook time out sequence. That is, if the user does not dial the first digit within 10-seconds of going off-hook, the connection will time out and be given intercept treatment, whether or not audible message waiting tone is heard.

INTERACTIONS WITH OTHER FEATURES

AUDIX

AUDIX is one of the messaging features that uses Message Waiting — Automatic. When a message is left in a user's *AUDIX Mail Box*, the Message Waiting — Automatic feature is activated to alert the called party to retrieve the message.

Call Coverage

Call Coverage, while not a messaging service as such, can become involved in the messaging process. Through *implied principal addressing*, messages left on calls that have redirected to coverage will activate Message Waiting — Automatic for the principal (the originally called party). Also, the *Coverage Callback function* will activate Message Waiting — Automatic for the principal.

DCS (Distributed Communications Service)

For System 85, Release 2, Version 3 and earlier switches, and for switches other than System 85, Message Waiting — Automatic will not work for internodal DCS calls. For System 85, Release 2, Version 4 switches, where the ES (Enhanced Services) message set is used, the Message Waiting — Automatic feature will work for internodal calls.

Leave Word Calling

Leave Word Calling is one of the messaging features that uses Message Waiting — Automatic. When a Leave Word Calling message is left for a user, the Message Waiting — Automatic feature is activated to alert the called party to retrieve the message.

Tenant Services

The operations of Message Waiting — Automatic may be influenced by the Tenant Services feature, depending on how the messaging feature is administered.

- If every element involved (calling party, called party, and messaging service) are assigned to the same partition, Message Waiting — Automatic will work normally.
- If the calling party and the messaging service are assigned to Partition 0, Message Waiting — Automatic will work normally.
- If the messaging service and the called party are in the same partition or if the messaging service is in Partition 0, and the calling party is in some other partition (other than 0 and the same partition as the called party) the call must be placed as an outside call. Message Waiting — Automatic will work for messaging services that service outside calls (AUDIX and Message Center Service).

Unified Messaging

Unified Messaging is fully compatible with the Message Waiting — Automatic feature. See the Unified Messaging feature for details on the functions and applications of this feature.

HARDWARE REQUIREMENTS

Message Waiting — Automatic requires the use the following special hardware.

For Message Waiting — Lamp

- A voice terminal with an integrated message waiting lamp:
  - — Any 7400D Series digital voice terminal
  - — Any 7300S or 7200H Series hybrid voice terminal
  - — PT (Personal Terminal) 510D or 515 BCT (Business Communications Terminal
  - — Any 7100A Series analog voice terminal
  - — Any 2500 Series voice terminal with an integrated lamp.
- Or a Z34A Message Waiting Indicator for 2500 sets without an integrated lamp.

For Audible Message Waiting

Any System 85 compatible voice terminal can receive audible message waiting alerting.

Message Service Requirements

The Message Waiting — Automatic feature has no other hardware requirements of its own. This feature is dependent on the messaging services used, and its hardware requirements are those of the associated messaging features.

- AUDIX
- Call Coverage
- Display—Voice Terminal
- Leave Word Calling.

FEATURE ADMINISTRATION

Assignment of Message Waiting — Automatic is on a per-extension basis. Assignment of a messaging service and a message-storage destination is on a per-voice terminal basis. The customer can fully administer this feature using the SMT (System Management Terminal). However, since the Audible Message Waiting service cannot be administered with TCM, the TCM feature can partially administer this feature. Message Waiting — Automatic can also be administered using CSM (Centralized System Management).

The following are the applicable MAAP and SMT procedures.

MAAP AND SMT PROCEDURES
MESSAGE WAITING — AUTOMATIC

PROCEDURE	WORD	PURPOSE	SMT
000	2	Specifies the destination (switch, AUDIX adjunct, or AP) for LWC message storage for a voice terminal and designates Call Coverage message retrieval permission.	Yes
000	3	Assigns audible automatic message waiting to an extension number.	Yes
063	1	Assigns an automatic message waiting lamp to a voice terminal.	Yes
063	2	Displays Automatic Message Waiting assignments.	Yes

The following are the applicable TCM path names used with the AP 16.

TCM SCREENS — MESSAGE WAITING — AUTOMATIC	
PATH NAME	**PURPOSE**
terminal-change extensions attributes	Assigns the class of service to an extension number.
terminal-change terminal buttons	This screen is also used to assign the Automatic Message Waiting lamp to a voice terminal.

The following are the applicable CSM Command Paths utilizing the **admin** area of TCM or FM.

CSM SCREENS — MASKS MESSAGE WAITING — AUTOMATIC		
APPL'N	**OBJECT**	**PURPOSE**
TCM	extension	Administers the class of service to an extension, and specifies the destination (switch, AUDIX adjunct, or AP) for LWC message storage for a voice terminal and designates Call Coverage message retrieval permission. Assigns automatic message waiting lamps to an analog voice terminal.
TCM	class-of-service	Assigns the Leave Word Calling feature to a voice terminal class of service.
TCM	The object will be the set type: i.e., 36-button, 12-button, bct, or vds.	Assigns the Automatic Message Waiting lamp to a voice terminal.

MESSAGE WAITING — MANUAL

DESCRIPTION

This feature enables a multiappearance voice terminal user to light the green status lamp at another preassigned multiappearance voice terminal by pressing a manual message waiting button. The status lamp lights at both terminals and can be turned off by either voice terminal.

The Message Waiting feature normally indicates a need to contact the activating party. The status lamp could also indicate to a secretary DO NOT DISTURB or NOT AVAILABLE while lighted. In these cases, the user should relabel the lamps.

Feature History and Development

This feature was first available on System 85 in Release 1. There have been no changes to this feature since Release 1.

USER OPERATIONS

The following are the user operating procedures for this feature.

To Turn On the Message Waiting Lamp From a Controlling Voice Terminal:

- Be sure the green status lamp is not lit.
- Press MSG WAIT. [The green status lamp lights at both voice terminals.]

To Turn Off the Message Waiting Lamp From the Controlling or Signaled Voice Terminal:

- Be sure the green status lamp is lit.
- Press MSG WAIT. [The green status lamp goes out at both voice terminals.]

CONSIDERATIONS

Signaled Voice Terminal

A voice terminal can only be assigned as a signaled voice terminal once. It cannot receive a message waiting signal from more than one voice terminal.

MSG WAIT Button

The number of MSG WAIT buttons assigned to a voice terminal is limited only by the number of unassigned buttons.

INTERACTIONS WITH OTHER FEATURES

None.

HARDWARE REQUIREMENTS

Multiappearance voice terminals are required for this feature.

FEATURE ADMINISTRATION

Assignment of the Message Waiting feature is on a voice terminal basis for multiappearance voice terminals. The customer can administer this feature using the SMT (System Management Terminal) or the TCM (Terminal Change Management) feature. This feature can also be administered using CSM (Centralized System Management).

The following is the applicable MAAP and SMT procedure.

MAAP AND SMT PROCEDURE — MESSAGE WAITING — MANUAL			
PROCEDURE	**WORD**	**PURPOSE**	**SMT**
053	2	Administers buttons for the controlling and signaled voice terminals.	Yes

The following is the applicable TCM path name used with the AP 16.

TCM SCREEN — MESSAGE WAITING — MANUAL	
PATH NAME	**PURPOSE**
terminal-change terminal buttons	Assigns the buttons for the Manual Message Waiting feature.

The following is the applicable CSM Command Path utilizing the **admin** area of TCM or FM.

CSM SCREEN — MASK MESSAGE WAITING — MANUAL		
APPL'N	**OBJECT**	**PURPOSE**
TCM	This command will be set type: i.e., 36-button, 12-button, bct, vds, feature-module, or data-module	Administers buttons for the controlling and signaled voice terminals.

MODEM POOLING

DESCRIPTION

Modem Pooling provides a ‘‘*pool*’’ of conversion resources that is available on an as needed basis to convert analog data signals to the DCP (Digital Communications Protocol) used with the System 85.

The Conversion Requirement

Modems convert digital signals to analog signals and vice versa. Since the System 85 is a digital switch, most of its data features use a digital format and protocol. Many public and private networks are analog; therefore, interpremises data communications frequently require a modem to perform the conversion between the analog and digital formats. The System 85 uses data modules to provide protocol conversion between DCP and the RS-232C signaling protocol used by most modems and data terminals. Modem Pooling pairs modems and data modules to form conversion resources.

Conversion Resources

Modem Pooling eliminates the need for a dedicated modem for every data terminal that requires access to analog facilities. With Modem Pooling, *conversion resources* are grouped into pools for switched access when required. Since the conversion resource is not permanently attached to the data terminal, the data terminal can also access digital facilities where a conversion resource is not needed. The switch makes modem pooling transparent to the user. When conversion is required, the switch automatically inserts the conversion resource into the call path.

Local Analog Calls

Modem Pooling is not used with local calls (calls that both originate and terminate on the same switch). To access a digital (Host Computer Access) port from an analog terminal, the user must appear to the switch as an off-premises analog facility.

Supported Trunks

Modem Pooling supports connections between any analog trunk (e.g., DID, DOD, ETN, WATS, FX, and CO) and a local digital data endpoint. Figure 78-1 shows a typical outgoing call connection from a local (DCP) terminal over an analog trunk with Modem Pooling support.

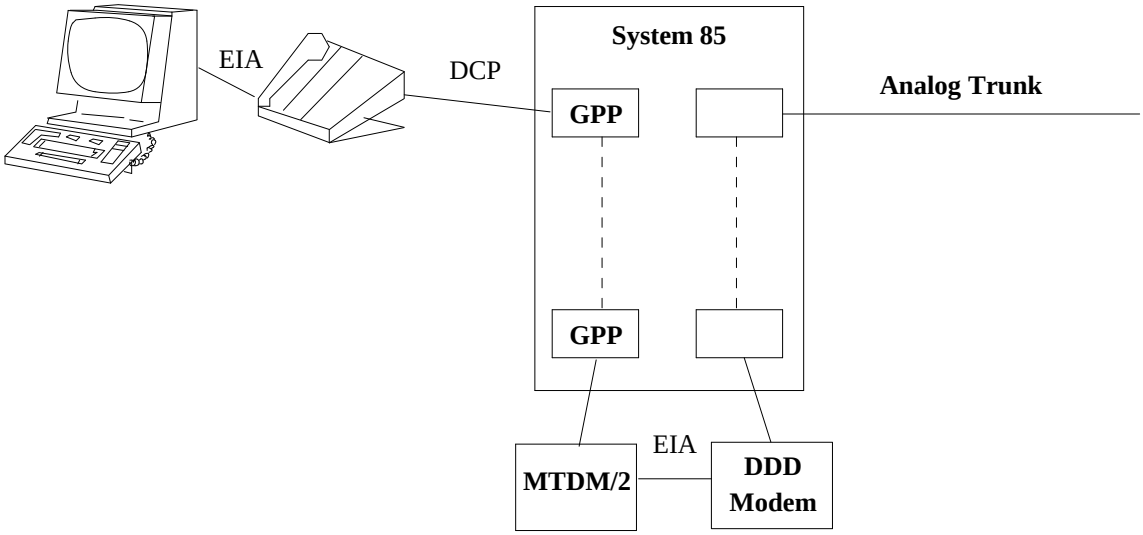

Figure 78-1. System 85, Modem Pooling Arrangement

Incoming Calls

Incoming calls (from off-premises terminals) are also supported by the Modem Pooling feature. An incoming data call over an analog trunk to a DCP interfaced data endpoint is recognized by the switch as needing a conversion resource. The conversion resource is reserved and placed in the path of the call when the call is completed. If the incoming call is answered at a voice terminal and transferred to its associated data module, the conversion resource is inserted when the data transfer takes place.

Attendant Extended Calls

Modem Pooling support is not provided for attendant-extended calls. A data call that requires both attendant assistance and Modem Pooling support can be extended to a hybrid or digital voice terminal that has a data button assigned (see the Data Call Setup feature). The voice terminal user can then extend the call to the desired DCP data endpoint using 1-button transfer procedures.

Modem Pool Characteristics

Each modem pool is established to support a specific set of parameters. A given modem pool can be set up to support synchronous or asynchronous, full- or half-duplex transmissions. Frequently, a given modem pool will support only one data rate. However, modems are available that can respond to a range of data rates (autobaud) automatically.

Modem pools use paired trunk groups (one digital and one analog). Each pair of trunk groups can support up to 99 conversion resources. The Route Advance feature can be used to access up to five trunk groups, for a maximum of 495 conversion resources, before the call enters a queue or fails for lack of a conversion resource.

Data Preindication

Data preindication (Data Call Setup feature) reserves a modem pool member (conversion resource) when needed. For data calls requiring the use of Modem Pooling, 1-button transfer with preindication or data terminal (keyboard) dialing techniques are recommended. Failure to preindicate will result in call failure after the connection is made if the needed conversion resource is not available.

Types of Calls Supported

The Modem Pooling feature can support incoming analog calls placed directly to a digital data endpoint or outgoing digital calls placed over an analog trunk. The switch recognizes the need for a conversion resource on these calls. Modem Pooling also supports incoming calls placed to voice terminals when an assigned Data button is used to transfer these calls to a digital data endpoint. Calling a voice terminal and then using the Transfer feature to transfer the call to a DCP interfaced data endpoint will fail because no conversion resource is provided.

The Modem Pooling feature is not available for local (on-premises) calls. However, a local call that appears to the switch as an incoming trunk call can receive Modem Pooling support. For example, an on-premises user could dial off-premises (DOD) to a number provided for use of off-premises data callers. This call would receive Modem Pooling support.

Feature History and Development

This feature was first available on System 85 in Release 1. There have been no changes to this feature since Release 1.

USER OPERATIONS

Modem Pooling requires no special user operation unless autobaud modems are used. The conversion resources are added to the connection automatically when needed and when applicable. For outgoing calls, a conversion resource can be reserved (using *data preindication*) before the data call is initiated if the voice terminal being used has a DATA button. The DATA button is pressed before dialing the data access code to activate *data preindication* (see Data Call Setup.).

CONSIDERATIONS

Hard and Soft Processor Swaps

Stable calls using a Modem Pooling conversion resource endure a hard processor swap. However, calls cannot be placed through a conversion resource during a hard processor swap.

Tie Trunk Calls

Dial repeating and automatic tie trunks can be used in interpremises connections requiring modem pooling (data calls). Both voice terminal and data terminal dialing users can access dial repeating tie trunks.

The attendant is automatically involved when an automatic tie trunk call is made, unless the trunk is set up as a Remote Access trunk. Attendant-extended calls are not provided Modem Pooling support; therefore, only voice terminal users can use normal automatic tie trunks for data calls. Data terminal dialing users must use them as Remote Access trunks.

INTERACTIONS WITH OTHER FEATURES

The following System 85 features affect or are affected by the operation of this feature.

Call Vectoring

The ‘‘route to’’ step of the Call Vectoring feature is compatible with the Modem Pooling feature. Whenever a conversion resource is needed to complete the call to a ‘‘route to’’ step’s destination, these conversion resources will be inserted.

Data Protection

Data Protection—Permanent should be assigned to all trunk groups associated with Modem Pooling to prevent any intrusions attempted by bridge-on feature users.

ISN (Information Systems Network) Interface

Modem Pooling on the System 85 provides 2-way connectivity between ISN endpoints and remote stations via either public or private network trunks. For example, a remote data station user can dial the System 85 number assigned to the ISN trunk group, receive the ISN dial prompt, and dial the ISN destination code. An ISN station user can also dial through to the remote data station. Use of Modem Pooling requires that extension number steering be available to access ISN Interface trunks.

ISDN (Integrated Services Digital Network)/PRI (Primary Rate Interface)

The Modem Pooling feature should work the same on ISDN calls as it does for other types of network data calls. The switch at each end of the call must determine the need for a modem pooling conversion resource based on the administered characteristics of the station end point.

A problem may occur if an analog interfaced data station places an ISDN call to a digital interface data end point on a remote switch. Because the call is coming in on an AVD type DS1 trunk facility, the receiving switch may not be able to recognize that a modem pooling conversion resource is needed.

Another problem could occur if data calls use the ''**ISDN Facilities Preferred bearer code**.'' If such calls start out on ISDN facilities and then are transferred to analog facilities at a tandem node, it may be too late to insert a modem pooling conversion resource at the originating switch.

Main/Satellite/Tributary

Data calls placed through main/satellite arrangements over analog tie trunks require Modem Pooling connections at each end of the call where digital facilities are used. A data call to or from a DCP-interfaced endpoint at a main or satellite switch must be supported by Modem Pooling. Modem Pooling at the main cannot provide conversion for a data endpoint at a satellite location.

Queuing

When a data call is queued, the modem pool conversion resource is held waiting along with the queued call.

Tenant Services

The Modem Pooling feature is not partitioned. When a digital trunk group, an analog trunk group, and a conversion resource are provided, access to this analog-to-digital conversion is provided for every partition in the switch.

Trunk Verification—Voice Terminal

The Trunk Verification—Voice Terminal feature can be used to test Modem Pooling conversion resources on R2 V3 and later switches. This cannot be done on earlier switches, and the Trunk Verification—Attendant feature cannot be used for this purpose.

When keyboard dialing is used to place a data call, the System 85 automatically reserves a Modem Pooling conversion resource and, if necessary, inserts the resource into the connection. As the switch reserves a resource, the *digital* Modem Pooling trunk-group number and the individual trunk number of the selected conversion resource are displayed in the RINGING call-progress message. In response to trouble reports, these values (after converting the trunk-group number to the trunk-group access code), can be used to verify the Modem Pooling conversion resource.

RESTRICTING FEATURE USE

Any restrictions applicable to trunk groups apply to the trunk groups used for Modem Pooling. Attendant Control of Trunk Group Access, however, should be avoided, as this would render the modem pool useless. Care must be taken to apply appropriate restrictions to each side of a trunk group pair.

HARDWARE REQUIREMENTS

Conversion Resource

The Modem Pooling feature requires the use of a specially configured conversion resource. This consists of the following:

- MTDM/2 (Modular Trunk Data Module)

  The data module has a switch that selects the modem pooling mode.

- DDD Modem

  Table 78-A provides a list of modems suitable for use with the Modem Pooling feature.

- RS-232C Connecting Cable.

Conversion resources can be rack mounted. The data module and modem connect via their RS-232C interface.

Table 78-1. Direct Distance Dialing Modems Suitable for Conversion Resources

MODEM	DUPLEX	SYNCHRONIZATION	DATA RATE	MODE
103JR	Full	Asynchronous	Low (up to 300 bps)	Originate and/or Answer
212AR	Full	Asynchronous	300 or 1200 bps	Originate and/or Answer (Autobaud)
		Synchronous	1200 bps	Originate and/or Answer
201CR	Half	Synchronous	2400 bps	Originate and/or Answer
208BR	Half	Synchronous	4800 bps	Originate and/or Answer

Connecting Circuits

- SN270, GPP (General Purpose Port) Circuit Pack

  The data module connects to the switch using a GPP (General Purpose Port) circuit administered as a trunk.

- SN243 Trunk Circuit Pack

  The modem connects to the switch via a DCA trunk circuit.

Supporting Circuitry

- Tone Detector Circuit

  The Tone Detector circuit detects call-progress tones for off-premises calls when data terminal (keyboard) dialing is used. This circuit also provides identifying signals used by System 85 to determine when to switch in a conversion resource for outgoing trunk calls.

- Analog/Digital Facilities Test Circuit

  The Analog/Digital Facility Test circuit supports both automatic (self tests) and time available testing on modem pool members.

FEATURE ADMINISTRATION

Assignment of the Modem Pooling feature is on a per-system basis. Assignment within the system is made on a per-trunk group basis. The customer can partially administer this feature using the FM (Facilities Management) feature. This feature can also be administered using CSM (Centralized System Management).

The following are the applicable MAAP procedures.

MAAP PROCEDURE — MODEM POOLING		
PROCEDURE	**WORD**	**PURPOSE**
100	1	Assigns a trunk group to a trunk type and dial access code.
100	2	Assigns data transmission characteristics to a trunk group.
150	1	Assigns trunk circuits (equipment locations) to trunk groups.
180	1	Assigns Modem Pooling pairs (conversion resources).

The following are the applicable FM path names used with the AP 16.

FM SCREEN — MODEM POOLING	
PATH NAME	**PURPOSE**
facilities-mgmt data-switching attributes	Assigns the DAC and trunk group number to a trunk group (both analog and digital). Assign the equipment location to analog and digital modems.
facilities-mgt data-switching trunk-attributes	Assign the transmission characteristics to digital trunk groups (i.e., data rate, full or half duplex, synchronous or asynchronous). Turns the Data Restriction feature on or off. Assign the trunk type to each group. Assign an overflow sequence. A routing table can be set up to associate a modem pool with a list of other pools to be used for the overflow.
facilities-mgt data-switching modem-pairs	Pair each digital port used in Modem Pooling with an analog port. Assign the modem pool pair as 2-way originating only, or terminating only.

The following are the applicable CSM Command Paths utilizing the **admin** area of TCM or FM.

CSM SCREENS — MASKS MODEM POOLING		
APPL'N	**OBJECT**	**PURPOSE**
FM	trk-grp	Administers a trunk group to a trunk type and a dial access code. This command also assigns data transmission characteristics and trunk circuits (equipment locations) to trunk groups.
FM	modem-pool	Administers digital and trunk members associated with a modem pool group, and associates digital trunk groups or analog trunk groups and up to ten members with a modem pool, and changes characteristics associated with the group.

MULTIAPPEARANCE PRESELECTION AND PREFERENCE

DESCRIPTION

This feature provides multiappearance voice terminal users with options for placing or answering calls on selected appearances. These options include:

- Preselection—Allows voice terminal users to *manually* select an appearance by pressing the appropriate button before going off-hook. All appearance preference options are overridden.
- Ringing Appearance Preference*—Automatically selects a ringing appearance for voice terminal users upon going off-hook.
- Calling Appearance Preference*—Automatically selects an appearance with an incoming call whether that line is ringing or not. Calling Appearance Preference or Preselection can be used to answer calls that would otherwise go unanswered from an appearance on another voice terminal.
- Idle Appearance Preference†—Automatically connects voice terminal users to an idle appearance upon going off-hook.
- Prime Appearance Preference†—Automatically selects the terminal's primary appearance for a voice terminal user going off-hook. Prime Appearance Preference can be used when a particular appearance is preferred for toll or interfacility calling. This operation serves to improve the recognition of calling costs.
- No Appearance Preference‡—The voice terminal user must *manually* select an appearance to place or answer a call.
- Last Appearance Preference†—The last appearance used is selected automatically (actually remains in use) when going off-hook to place a call or when a call terminates on the line.

Feature History and Development

This feature was first available on System 85 in Release 1. There have been no changes to this feature since Release 1.

---

* "Terminating" preference.

† "Originating" preference.

‡ "Terminating" and "originating" preference.

USER OPERATIONS

The following are the user operating procedures for this feature. Each operating procedure is based on the assumption that the particular option has been assigned for the voice terminal.

Preselection

To override the preference assigned and be connected to another appearance:

- Verify that the selected appearance is idle. [The green status lamp of the selected appearance is dark.]
- Press the idle appearance button. [The red status lamp lights.]
- Go off-hook. [The green status lamp lights, dial tone is heard, and the user is connected to the appearance.]
- When the connection is no longer desired, go on-hook. [The green status lamp goes out. The red status lamp may or may not go out.]

Ringing Appearance Preference

To be automatically connected to an incoming call that is ringing:

- Verify that the voice terminal is ringing. [Ringing is heard, the green status lamp of the ringing appearance is flashing, and the red status lamp is lit.]
- Go off-hook. [Ringing stops, the green status lamp lights, and the user is connected with the calling party.]
- When the connection is no longer desired, go on-hook. [The green status lamp goes out. The red status lamp may or may not go out.]

Calling Appearance Preference

To connect to an incoming call which may or may not be ringing:

- Verify that an appearance has an incoming call present. [Ringing may or may not be heard, the green status lamp is flashing, and the red status lamp is lit.]
- Go off-hook. [If the voice terminal was ringing, ringing stops, the green status lamp lights, and the user is connected with the calling party.]
- When the connection is no longer desired, go on-hook. [The green status lamp goes out. The red status lamp may or may not go out.]

Idle Appearance Preference

To be automatically connected to an idle appearance upon going off-hook:

- Verify that at least one appearance is idle. [At least one appearance has a green status lamp that is dark.]
- Go off-hook. [The red and green status lamps of the appearance selected light, dial tone is heard, and the user is connected to the idle appearance.]
- When the connection is no longer desired, go on-hook. [The red and green status lamps go out.]

Prime Appearance Preference

To be automatically connected to the prime appearance:

- Verify that the prime appearance assigned is not busy. [The red status lamp is lit and pointing to the prime appearance. The green status lamp of the prime appearance is dark.]
- Go off-hook. [The green status lamp lights, dial tone is heard, and the user is connected to the prime appearance.]
- When the connection is no longer desired, go on-hook. [The green status lamp goes out; red status lamp remains lit.]

No Appearance Preference

This feature does not automatically connect the voice terminal user to an appearance. The appearance must be selected manually using the Preselection function.

Last Appearance Preference

To be automatically connected to the last appearance used:

- Verify that the last appearance used is not busy. [The red status lamp is lit and pointing to the last appearance used. The green status lamp of the last appearance used is dark.] (If the appearance is busy and the user goes off-hook, the user is bridged onto the 2-party connection. This occurs unless Manual Exclusion is active or unless another party is already bridged onto the connection.)
- Go off-hook. [The green status lamp lights, dial tone is heard, and the user is connected to the last appearance used.]
- When the connection is no longer desired, go on-hook. [The green status lamp goes out.]

CONSIDERATIONS

Reorder Tone and Idle Appearance Preference

For Idle Appearance Preference, the switch returns reorder tone whenever the user goes off-hook while every appearance is active.

Status of Red Lamp

For Preselection, Ringing Appearance Preference, and Calling Appearance Preference, the original appearance preference is restored when going on-hook. The status of the red lamp depends on what features have been assigned.

- If No Appearance Preference is assigned, the red status lamp goes out.
- If Idle Appearance Preference is assigned, the red status lamp goes out.
- If Last Appearance Preference is assigned, the red status lamp stays lit.
- If Prime Appearance Preference is assigned, the red status lamp of the prime appearance lights and the red status lamp of the selected lamp goes out.

INTERACTIONS WITH OTHER FEATURES

The following System 85 features affect or are affected by the operation of this feature.

Hold

Interactions between the Hold feature and the Multiappearance Preselection and Preference feature are as follows:

a. If the HOLD button on the terminal is pressed while the terminal is on-hook, any appearance preference for call origination (i.e., Last Appearance Preference, Prime Appearance Preference, or Manual Preselection) is lost. The user, upon going off-hook, does not connect to any appearance (unless Idle Appearance Preference is assigned).

b. If the Prime Appearance is placed on hold and the controlling terminal user goes on-hook, the I-use lamp is relit on the Prime Appearance button. If the controlling terminal user then goes off-hook, the terminal connects back to the Prime Appearance and that call is removed from hold.

c. If the HOLD button is pressed while the terminal is in the on-hook ringing state and the Ringing Appearance Preference is active, the Ringing Appearance Preference feature becomes inoperative. That is, when the user goes off-hook, no appearance is selected (unless Idle Appearance Preference is assigned).

Intercom—Automatic, Dial, and Manual

At the originating voice terminal, the Multiappearance Preselection and Preference feature cannot automatically select an intercom appearance. However, at the receiving voice terminal, the Multiappearance Preselection and Preference feature can select the intercom appearance receiving the call.

Personal Central Office Line

The Multiappearance Preselection and Preference feature does not automatically select Personal Central Office Line appearances.

HARDWARE REQUIREMENTS

A multiappearance voice terminal is required for this feature.

FEATURE ADMINISTRATION

Assignment of the Multiappearance Preselection and Preference feature is on a per-multiappearance basis. The customer can administer this feature using the SMT (System Management Terminal) or the TCM (Terminal Change Management) feature. This feature can also be administered using CSM (Centralized System Management).

The following are the applicable MAAP and SMT procedures.

MAAP AND SMT PROCEDURES
MULTIAPPEARANCE PRESELECTION AND PREFERENCE

PROCEDURE	WORD	PURPOSE	SMT
051	1	Specifies the desired type of originating and terminating preference for a voice terminal.	Yes
052	1	Assigns prime appearance (prime line) to an extension number of a voice terminal.	Yes

The following is the applicable TCM path name used with the AP 16.

TCM SCREEN — MULTIAPPEARANCE PRESELECTION AND PREFERENCE

PATH NAME	PURPOSE
terminal-change terminal equipment	Specifies the desired type of appearance preference for a voice terminal and assigns prime appearance (prime line) to a voice terminal.

The following is the applicable CSM Command Path utilizing the **admin** area of TCM or FM.

CSM SCREEN — MASK MULTIAPPEARANCE PRESELECTION AND PREFERENCE		
APPL'N	**OBJECT**	**PURPOSE**
TCM	This command will be set type: i.e., 36-button, 12-button, bct, data-module, feature-module, coverage-module, or vds.	Administers the desired type of preference for a voice terminal and assigns prime appearance (prime line) to an extension number of a voice terminal.

MULTIPLE LISTED DIRECTORY NUMBERS

DESCRIPTION

The Multiple Listed Directory Numbers feature helps the attendant identify the purpose of incoming public network calls. It does this through the ICI (Incoming Call Identification) display. With only a single LDN (Listed Directory Number), the ICI display shows only that the call is an LDN call. This situation does not provide much feedback for the attendant of a large, diversified System 85. Using multiple LDNs, the attendant can then determine something about the purpose of an LDN call before the call is even answered.

Types of LDNs:

There are two types of LDNs. Each type uses a different type of CO (Central Office) trunk.

- DID (Direct Inward Dialing) LDN — This type of LDN uses a DID trunk group from the CO to the System 85. The CO sends the dialed digits to the System 85 for determination of routing. Through this type of routing, the trunk group can be shared by more than one LDN as well as by calls bound for other destinations. (The Multiple LDN feature provides as many as 999 DID LDNs, each with a unique ICI display.)

  These DID LDNs can also be dialed by System 85 voice terminal users. These users need only dial the extension number digits to access the attendant.

- Non-DID LDN — This type of LDN uses a non-DID (i.e., an ‘‘attendant completing’’) trunk group. Calls from over these trunk groups are routed directly to the attendant queue. No digits are passed from the CO to the System 85. Thus, the trunk has no other use. This is like a private line at a person’s home. (The number of non-DID LDNs is limited by the number of trunk groups that can be dedicated for this use.)

The decision to use DID verses non-DID LDNs is based on the present switch configuration and/or on the number of LDNs desired. If DID service is to be provided, LDN traffic should be engineered into the DID plan. If not, the number of LDNs to be provided may or may not warrant the use of DID service. There is a point at which DID service, that may require only a single DID trunk, becomes more economical than providing one non-DID trunk for each LDN.

Application Example

Figure 80-1 shows an example of how multiple LDNs might be used. In this example, the owner of an automobile dealership has divided the organization into two separate divisions; one for cars and one for trucks. There are also finance and a parts divisions that support both the car and truck divisions. The car division and the truck divisions each have their own LDN. Since no distinction is made between car financing and truck financing, there is no need for two separate financing LDNs. The same is true for parts. These two divisions, along with other calls, can share a third LDN. In this example, calls using 456-2400

cause the ICI to display ‘‘CARS.’’ If the caller asks for the service department, the attendant knows from the ICI that the caller wants car service. Calls using 456-2500 display ‘‘TRUC’’ on the ICI. When the ICI displays ‘‘LDN’’ (general information), the attendant knows the call is of a general nature.

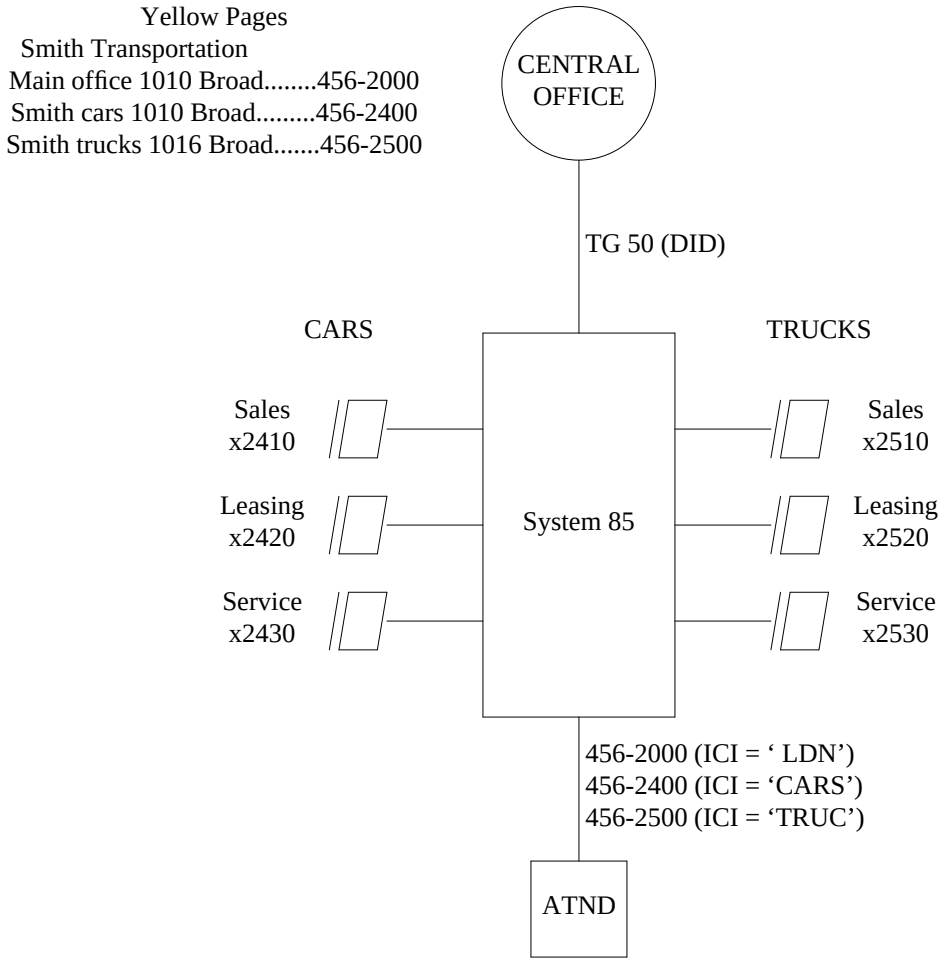

Figure 80-1. Sample Use of Multiple LDNs

Feature History and Development

This feature was first available on System 85 in Release 1. For Release 2, Version 3, the maximum number of DID LDNs was increased from four to nine. The DID LDNs were also made accessible by System 85 voice terminal users. A separate attendant access code is no longer required.

For Release 2, Version 4, the maximum number of DID LDNs is increased from 9 to 999. This limit of 999 LDNs is intended to provide enough capacity for partitioned switches. However, the full capacity of 999 DID LDNs is also available to switches that are not partitioned.

USER OPERATIONS

None.

CONSIDERATIONS

Billing Provisions

For billing purposes, one listed directory number must be assigned to the attendant(s). When complete billing information is unavailable, the call is billed to this number.

Multiple Attendant LDNs

Each non-DID LDN must use a separate trunk group to provide a unique ICI display.

Published Numbers and Malicious Call Trace

For LDN applications of Malicious Call Trace, malicious calls to LDNs are usually placed by someone outside the organization. These people are likely to place malicious calls to numbers found in the public telephone directory. When this is the case, attendants answering calls directed to published numbers should be equipped with a feature button for convenient activation of Malicious Call Trace.

INTERACTIONS WITH OTHER FEATURES

The following System 85 features affect or are affected by the operation of this feature.

Call Vectoring

A vector directory number cannot be assigned as a system LDN in Procedure 204, Word 1. When this is attempted, an administration error will occur.

In order to route public network calls to the attendant queue with a VDN, the vector must contain a ‘‘route to’’ command that directs these calls to the attendant queue. However, vector treatment of calls within the attendant queue is not available. Vector steps (e.g., recorded announcements, conditional go to steps, forced busy, and forced disconnect) can be applied to these calls *before they enter the queue*. However, once a call enters the attendant queue, vector processing stops.

Data Call Setup

Attendant seeking incoming calls cannot connect directly to a DCP (Digital Communications Protocol) interfaced data end point. To complete such a call requiring a conversion resource, the attendant must extend the call to a multiappearance voice terminal that has a Data button assigned for the desired data end point. The multiappearance voice terminal can then transfer the call to the data end point using 1-button transfer procedures.

Extension Number (Multidigit) Steering

Normally, incoming exchange network calls to the System 85, via the assigned local listed directory number, connect to either a local attendant or a Centralized Attendant Service attendant. With Extension Number Steering, it is possible for Direct Inward Dialing trunks to provide access to both types of attendants through the use of different telephone numbers. Each number is published (i.e., a Listed Directory Number), but the System 85 treats them differently. One number is treated as a normal LDN which is routed to the attendant. In this case, the call routes to the CAS attendant. The other number is treated as a DID LDN call. But instead of routing the call to the CAS attendant, the digits are assigned to Extension Number Steering for redirection to a local attendant (i.e., CAS special service attendant).

Foreign Exchange Access

The Multiple Listed Directory Number feature can be used to direct incoming FX Access calls to the attendant queue.

Intercept Treatment

The Attendant Diversion to Recorded Announcement function overrides the Multiple Listed Directory Numbers feature. When an attendant activates Attendant Diversion to Recorded Announcement, a public-network caller cannot reach the attendant queue. Instead, these calls are diverted to the recorded announcement.

Main/Satellite/Tributary

If a Main/Satellite complex uses single-digit steering, the LDN (Listed Directory Number) at the main should not begin with the same first digit that is assigned to a Main/Satellite trunk group. Furthermore, LDNs should not begin with a digit assigned to a feature dial access code. The exception is the attendant access code. The leading digit(s) of an LDN can be the same as the attendant access code. Likewise, an LDN can have the same leading digit(s) as local extension numbers.

Power Failure Transfer

During a power failure, a switch that uses incoming (or 2-way) CO trunks for non-DID LDN (Listed Directory Number) service can transfer these LDN calls to predesignated voice terminals.

WATS Access

The Multiple LDN feature can be used to direct incoming 800 Service Access calls to the attendant queue.

HARDWARE REQUIREMENTS

The Multiple Listed Directory Number feature requires the following additional or special hardware.

- Additional trunk circuits may be required.
  a. Non-DID trunk circuits of an SN230 circuit pack (four circuits per SN230)
  b. DID trunk circuits of an SN232 circuit pack (four circuits per SN232).
- A LORAIN* voice switched gain amplifier may be necessary to achieve sufficient transmission gain for non-DID connections.

FEATURE ADMINISTRATION

Assignment of the Multiple Listed Directory Numbers feature is on a system basis. This feature is only administered using the MAAP. This feature can also be administered using CSM (Centralized System Management).

The following are the applicable MAAP procedures.

SYSTEM 85 RELEASE 2, VERSION 3 AND LATER MAAP PROCEDURES — MULTIPLE LISTED DIRECTORY NUMBERS		
PROCEDURE	**WORD**	**PURPOSE**
204	1	Designates the alphanumeric ICI display for each LDN.
204	1	Administers the system's LDNs.

A DID LDN is administered by assigning the desired alphanumeric display and the LDN extension number to a call type (from LDN1 to LDN999) in Procedure 204, Word 1.

* Trademark of Lorain Telephone Electronics.

A non-DID LDN is administered by assigning the desired alphanumeric display to the trunk-group number of an attendant-completing trunk group.

The following are the applicable MAAP procedures for Release 2, Version 2, and earlier switches.

SYSTEM 85 RELEASE 2, VERSION 2 AND EARLIER MAAP PROCEDURES — MULTIPLE LISTED DIRECTORY NUMBERS		
PROCEDURE	**WORD**	**PURPOSE**
204	1	Designates the alphanumeric ICI display for each LDN.
352	—	Administers the system's DID LDNs.

The following is the applicable CSM Command Path utilizing the **admin** area of TCM or FM.

SYSTEM 85 RELEASE 2, VERSION 3 AND LATER CSM SCREEN — MASK — MULTIPLE LISTED DIRECTORY NUMBER		
APPL'N	**OBJECT**	**PURPOSE**
TCM	console-messages	Adds, changes, displays, or removes the alphanumeric ICI display on all attendant consoles on a switch, and defines the system's LDNs.

The following are the applicable CSM Command Paths utilizing the **admin** area of TCM or FM for Release 2, Version 2, and earlier systems.

SYSTEM 85 RELEASE 2, VERSION 2 AND EARLIER CSM SCREENS — MASKS — MULTIPLE LISTED DIRECTORY NUMBER		
APPL'N	**OBJECT**	**PURPOSE**
TCM	console-messages	Adds, changes, displays, or removes the alphanumeric ICI display on all attendant consoles on a switch.
TCM	listed-directory-number	Adds, changes, displays, or removes the system's DID LDNs.

MUSIC-ON-HOLD ACCESS

DESCRIPTION

This feature provides music to a held party. Music assures the held party that the connection is still in effect. A nontalking or no-tone connection could cause the calling party to question if the connection is still in effect.

Feature History and Development

This feature was first available on System 85 in Release 1. For software packages up to Release 2, Version 3, only one music source can be provided per switch. For Release 2, Version 4, the capability of providing one music source per module (up to 31 sources) is added.

USER OPERATIONS

None.

CONSIDERATIONS

Music Source

Music sources or other audible indications are not provided with the switch—only access to these music sources.

Music Limit

As each local voice terminal places a call on hold, the Music-on-Hold software adds music to the held party's time slot.

Without a music source per module:

Based on time-slot and TMS-blockage limitations, as many as 255 callers per module can listen to music at the same time. In practice, the limit is considerably lower.

With a music source per module:

When a music source is provided for every module, the practical limit more nearly approaches the theoretical limit of 255 callers per module. Music can simply be added to every held caller's time slot. (TMS-blockage is no longer a concern.)

Music Sources Provided for Some Modules

It is acceptable to provide a music source for some modules, but not for others. When this is done, the switch always provides music from *one of two* sources. When an extension in a certain module places a call on hold, music is added to the held party's time slot by that module's music source (if provided). Otherwise, music is added to the time slot using the music source attached to the *lowest numbered module* that does have a music source.

INTERACTIONS WITH OTHER FEATURES

The following System 85 features affect or are affected by the operation of this feature.

Attendant Call Waiting

When Attendant Call Waiting and Music-on-Hold Access are provided, a call placed by the attendant to a busy single-line voice terminal is connected to music until the called voice terminal is no longer busy or the attendant reconnects to the waiting call.

ACD (Automatic Call Distribution)

For Release 2, Version 4 ACDs, it is strongly recommended that each module in the switch where Music-on-Hold is desired be equipped with a music source. This will reduce the use of time slots and links between modules.

NOTE: Multiple music sources are not available in Release 2, Version 3.

Call Park

When Music-on-Hold is implemented, music can be provided for a call on hold in an answer-back channel.

Call Vectoring

The music interface that can be provided with a ''delay'' step is functionally independent of the system-wide Music-on-Hold feature. To provide music for vector processing only, music source(s) should be provided and the Music-on-Hold software should be fully administered. Then, to turn off the *regular* Music-on-Hold feature, Field 11 of Procedure 275, Word 1 is set to ''0.''

Code Calling Access

When Music-on-Hold is implemented, music can be provided for a call on hold in an answer-back channel.

Conference—Three Party

Music is provided to the first call put on hold when establishing a Conference—Three Party call. When an established three party conference call has been put on hold and one of the parties on hold goes on-hook, music is not given to the remaining party on hold.

Hold

If a conference call is put on hold, the conferees continue with the conference call and are not provided music, even if Music-on-Hold Access is active. Music is supplied to a nonconference party on hold.

Loudspeaker Paging Access

When Music-on-Hold is implemented, music can be provided for a call on hold in an answer-back channel.

Personal Central Office Line

When assigned, Music-on-Hold is provided for held Personal Central Office Line appearances.

Malicious Call Trace

When Malicious Call Trace is activated on a switch that provides Music-on-Hold, the originator of the malicious call receives music whenever this caller is placed on hard hold. This effect usually occurs when Malicious Call Trace is activated from a multiappearance voice terminal using the dial access code. If this functionality is considered unacceptable, there are several ways to attenuate or circumvent the problem. To minimize the caller's alarm, the person activating Malicious Call Trace can advise the caller, ''I need to put you on hold for a short time. I'll be right back.'' Other alternatives are to provide MCT ACTIVATE buttons for voice terminals that are likely to receive malicious calls, or to activate Malicious Call Trace from a neighboring voice terminal. If the previous alternatives are considered unacceptable, Music-on-Hold can be disabled using Procedure 275, Word 1.

Tenant Services

The Music-on-Hold Access feature is not partitioned. When a music source is provided and Music-on-Hold is enabled in Procedure 275, Word 1, music is provided to held parties in every partition.

Multiple music sources are also a system-side resource. If an extension (regardless of extension partition) in a certain module places a call on hold, music is added to the held party's time slot by that module's music source (if provided). Otherwise, music is added to the time slot using the music source attached to the *lowest numbered module* that does have a music source.

Transfer

When Music-on-Hold Access is provided, if a multiappearance terminal is transferring a single party, the party receives music after being put on hold. However, if transferring two parties, the parties do not receive music while on hold. Instead, the two held parties maintain a talking connection.

HARDWARE REQUIREMENTS

The Music-on-Hold Access feature requires the following additional or special hardware.

- An auxiliary trunk circuit of an SN231 circuit pack for each music source (four circuits per SN231)
- A 36A voice coupler
- A 2012D power transformer to supply power to the voice coupler
- Customer-provided music source(s).

FEATURE ADMINISTRATION

Assignment of the Music-on-Hold Access feature is on a per-system class-of-service and on a per-trunk group basis. The customer can partially administer this feature using the SMT (System Management Terminal). This feature can also be administered using CSM (Centralized System Management).

The following are the applicable MAAP and SMT procedures.

MAAP AND SMT PROCEDURES MUSIC-ON-HOLD ACCESS			
PROCEDURE	**WORD**	**PURPOSE**	**SMT**
054	3	Displays the Hold-With-Music button type for a multiappearance voice terminal.	Yes
100	1	Assigns the music interface trunk type to the Music-on-Hold Access trunk group.	No
150	—	Assigns the SN231 equipment location of a Music-on-Hold trunk (for R2 V4, up to 31 trunks) to its trunk-group number.	No
275	1	Assigns Music-on-Hold to the system class of service (Field 11). This procedure also assigns Music-on-Hold for answer-back channels (Field 7). (The Call Vectoring feature can have Music-on-Hold without administering Field 11.)	Yes

The following are the applicable CSM Command Paths utilizing the **admin** area of TCM or FM.

CSM SCREENS — MASKS MUSIC-ON-HOLD ACCESS		
APPL'N	**OBJECT**	**PURPOSE**
TCM	This command will be set type: i.e., 36-button, 12-button, bct, data-module, feature-module, coverage-module, or vds.	Administers the Music-on-Hold button type for a multiappearance voice terminal.
FM	trk-grp	Assigns the music interface trunk type to the Music-on-Hold Access trunk group and assigns the equipment location of the trunk to its trunk-group number.
TCM/FM	sys-cos	Assigns Music-on-Hold to the system class of service.

OFF-PREMISES DATA-ONLY EXTENSIONS

DESCRIPTION

The Off-Premises Data-Only Extension feature provides switched access to data equipment at a remote location (greater than 5000 feet) from System 85 using analog or digital private line facilities that do not compete with voice traffic. This feature is used for data communications, when a significant volume of data is exchanged between a System 85 and a remote host computer or cluster of data terminals. Operation of this feature is transparent to all users. The users of the remote terminal cluster can access System 85 data endpoints using data terminal (keyboard) dialing. Unless specifically restricted, any terminal on the system that can originate data calls, can access a remote data endpoint as though it were on-premises.

Analog Service

The use of analog lines requires a dedicated modem and TDM for each private line facility to a remote data endpoint. The analog facilities can be arranged on an individual line basis or on a multiplexed basis (Figure 82-1).

Digital Service

Digital private line service permits direct digital access to the System 85 and avoids the need for modems. This service is available with DATAPHONE* Digital Service. This service connects the System 85 to Off-Premises Data-Only Extensions via DS1 carrier links that support data rates up to 56 Kbps on an individual basis or on a multiplexed basis (also shown in Figure 82-1). The DSU (Data Service Unit) provides the interface at each end of the DDS link. At the System 85, the data module converts DCP to RS-232C for acceptance by the DSU. At the remote side, the output of the host computer or terminal cluster is RS-232C, which connects directly to the DSU.

This service is not limited to local area support. The DATAPHONE Digital Service network uses T1 carrier links for connections under 100 miles and microwave radio links for distances more than 100 miles.

DATAPHONE Digital Service supports user data rates of 2.4, 4.8, 9.6, and 56 Kbps. It can be interfaced with the system as individual lines or locally multiplexed to provide multiple lines per link. The best arrangement for a given application depends on the data rates and number of lines actually needed. In this way, the user can be provided with the level of service required by local needs. If 1200 bps is the rate needed for a group of off-premises work stations, several stations could be multiplexed over one DATAPHONE Digital Service link. Figure 82-1 shows a possible arrangement (using multiplexing and DATAPHONE Digital Service) to provide Off-Premises Data-Only Extension service for the System 85.

---

* Registered servicemark of AT&T.

The DATAPHONE Digital Service system does not provide multiplexing and demultiplexing. This must be locally engineered.

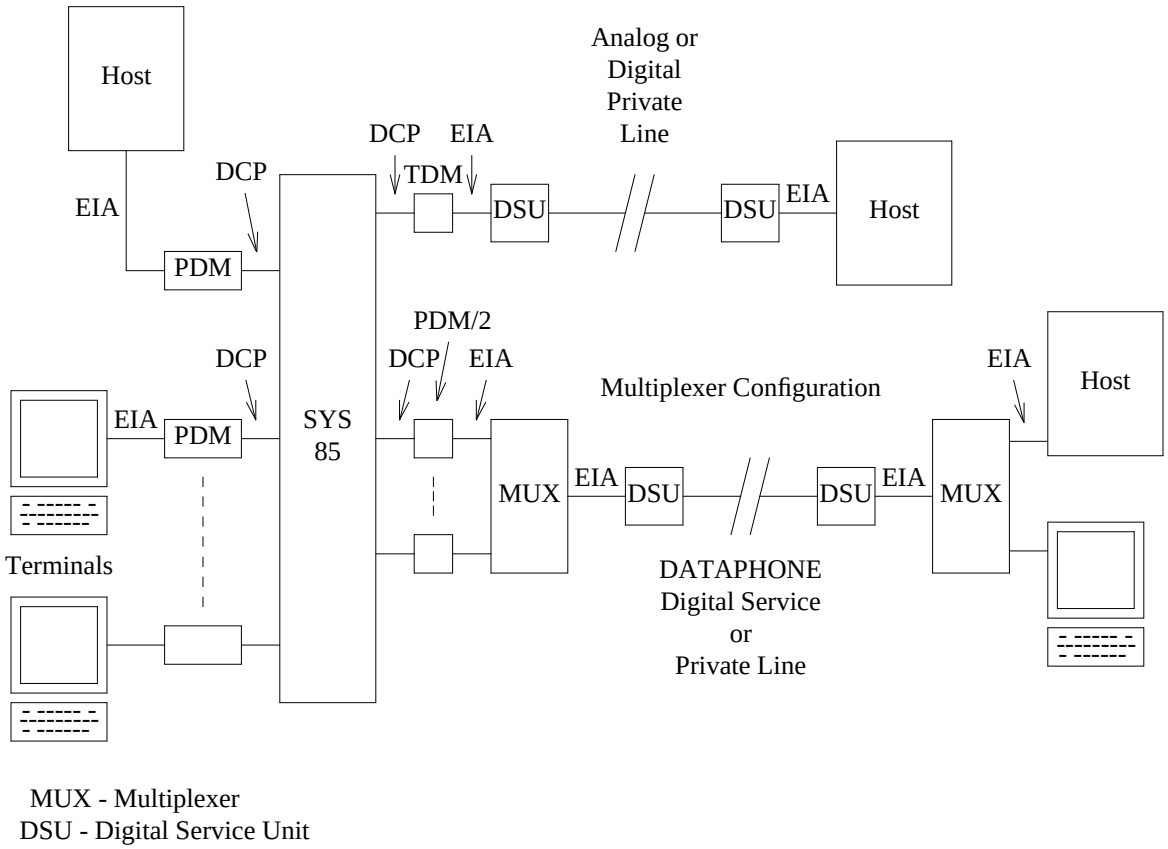

Figure 82-1. System 85, Off-Premises Data-Only Extension Arrangements

Feature History and Development

This feature was first available on System 85 in Release 1. There have been no changes to this feature since Release 1.

USER OPERATIONS

The remote data endpoints (i.e., the terminal cluster or host computer) access System 85 endpoints using keyboard dialing. System 85 users may use either voice terminal dialing or keyboard dialing. See Data Call Setup for specific procedures.

CONSIDERATIONS

Switch Appearance

The Off-Premises Data-Only Extension appears to the System 85 as an on-premises data module optioned for terminal dialing. As such, it has the same limitations and interactions as an on-premises data terminal (keyboard) dialing station.

Data Protection

These extensions should be assigned Data Protection—Permanent.

INTERACTIONS WITH OTHER FEATURES

The following System 85 features affect or are affected by the operation of this feature.

The usual interactions that apply to features that involve trunks, such as Hunting and Queuing, also apply to Off-Premises Data-Only Extensions.

Data Call Setup

The data module supporting the Off-Premises Data-Only Extension should be assigned Data Terminal (Keyboard) Dialing, an attribute of the Data Call Setup feature.

Host Computer Access

If the Host Computer Access feature uses TDMs to interface local host ports with the switch, off-premises data stations that also used a TDM for switch interface cannot access these ports or be accessed by the local host using these ports. This is because a TDM cannot handshake with another TDM. This problem can be avoided by using PDMs on Host Computer access ports (some or all) or by using the DMI (Digital Multiplexed Interface) feature for local host access.

Modem Pooling

If the off-premises data facilities access the local system using an MTDM, the Modem Pooling feature is not available. This is because an MTDM cannot handshake with the MTDM used in the Modem Pooling conversion resource.

RESTRICTING FEATURE USE

Restriction capabilities that can be applied to any on-premises data module can be applied to the data module supporting the Off-Premises Data-Only Extension.

HARDWARE REQUIREMENTS

The Off-Premises Data-Only Extension feature uses private line analog or digital facilities. Specific hardware requirements depend on the arrangements used.

- If an analog private line is used, a dedicated modem and data module must be provided.
- If DATAPHONE Digital Service (DS1) is used, a Data Service Unit (DSU) is needed to interface the connecting line with the supporting data module.

- Multiplexer requirements can be customer engineered.

FEATURE ADMINISTRATION

Assignment of the Off-Premises Data-Only Extensions feature is on a per-line basis as a data module with terminal dialing capabilities. The customer can fully administer this feature using the SMT (System Management Terminal) and TCM (Terminal Change Management) feature. This feature can also be administered using CSM (Centralized System Management).

The following are the applicable MAAP and SMT procedures.

MAAP AND SMT PROCEDURES
OFF-PREMISES DATA-ONLY EXTENSIONS

PROCEDURE	WORD	PURPOSE	SMT
000	1	Assigns extension characteristics for off-premises extension.	Yes
010	3	Assigns data protection to a line class of service.	Yes
051	1	Assigns characteristics of a TDM.	Yes

The following are the applicable TCM path names used with the AP 16.

TCM SCREENS — OFF-PREMISES DATA-ONLY EXTENSIONS

PATH NAME	PURPOSE
terminal-change terminal equipment	Assigns a data module to an equipment location, an extension number, and keyboard dialing.
terminal-change class-of-service attributes	Assigns Data Protection to a line class of service.
terminal-change extension attributes	Assigns the attributes of an extension number (e.g., assign an extension to a line class of service).

The following are the applicable CSM Command Paths utilizing the **admin** area of TCM or FM.

CSM SCREENS — MASKS OFF-PREMISES DATA-ONLY EXTENSIONS		
APPL'N	**OBJECT**	**PURPOSE**
TCM	extension	Administers extension characteristics for off-premises extension(s).
TCM	class-of-service	Assigns data protection to a line class of service.
TCM	This command will be set type: i.e., 36-button, 12-button, bct, data-module, feature-module, coverage-module, or vds.	Administers the characteristics of a TDM.

OVERRIDE

DESCRIPTION

The Override feature permits authorized multiappearance voice terminal users to interrupt other terminal users who are on a 2-party connection. Only terminal users who require the ability to contact other terminal users on a preemptive basis should be assigned this feature.

Warning Tone

The talking parties hear a warning tone before the third party enters the connection. The warning tone is a 4-second burst of 440-hertz tone.

An override call to a multiappearance voice terminal intrudes on a 2-party connection only when all appearances [including originating only appearances] are busy. If any appearance is idle, the override call terminates to the idle appearance with distinctive 3-burst ringing.

Feature History and Development

This feature was first available on System 85 in Release 1. There have been no changes to this feature since Release 1.

USER OPERATIONS

The following are the user operating procedures for this feature.

To Override a Busy Voice Terminal

From a single-line voice terminal:

- Go off-hook. If on a 2-way connection, momentarily press the switchhook, and dial the Call Hold access code. [Dial tone]
- Dial the Override access code. [Second dial tone]
- Dial the desired extension number. [Warning tone is heard by both parties on the active call and the overriding terminal user. The user is bridged onto the connection.]

From a multiappearance voice terminal (alternative 1):

- Go off-hook. If on a 2-way connection, press TRANSFER or CONFERENCE.
- Press an idle appearance button. [Dial tone]
- Dial the Override access code. [Second dial tone]
- Dial the desired extension number. [Warning tone is heard by both parties on the active call and the overriding terminal user. The user is bridged onto the connection.]

From a multiappearance voice terminal (alternative 2):

- Go off-hook. If on a 2-way connection, press TRANSFER or CONFERENCE.
- Press an idle appearance button. [Dial tone]
- Dial the desired extension. [Busy tone is heard. Special ringback is heard if Call Waiting is being used.]
- Press OVERRIDE. [Warning tone is heard by both parties on the active call and the overriding terminal user. The user is bridged onto the connection.]

CONSIDERATIONS

Dark Status Lamp

When a 3-way connection is established and any party hangs up, the OVERRIDE status lamp goes dark.

Intercept Tone

Intercept tone results when:

- The calling voice terminal is not assigned this feature.
- An invalid access code or extension number is dialed.
- The calling voice terminal has voice terminal restrictions.
- The called voice terminal has voice terminal restrictions.
- The calling single-appearance voice terminal has a call on soft hold.
- The calling single-appearance voice terminal has a call on both soft hold and hard hold.
- An Override call is attempted toward a connection involving a precedence call with a precedence level higher than Routine.

Busy Tone

Busy tone results when:

- The called voice terminal has a party in soft hold.
- The called voice terminal is maintenance busy.
- The called voice terminal is in any state other than a stable talking state.

- The called voice terminal is in a talking state with a auxiliary trunk. Auxiliary trunks are loudspeaker paging, etc.
- The called voice terminal is in a talking state with the attendant.

Hard and Soft Processor Swaps

If an Override user has entered a stable connection when a hard processor swap occurs, this 3-party connection will endure the hard swap.

A voice terminal user cannot override a line during a hard processor swap.

The Override feature operates normally during a soft processor swap.

INTERACTIONS WITH OTHER FEATURES

The following System 85 features affect or are affected by the operation of this feature.

Attendant Call Waiting

Override has precedence over any call waiting (via the Attendant Call Waiting feature) on the called extension. However, Override is denied toward the line that is waiting.

ACD (Automatic Call Distribution)

When Override is activated toward the individual extension number of a busy ACD agent, the override call intrudes into the agents active call. When Override is activated toward the individual extension number of an idle ACD agent, the override call alerts the agent with 3-burst ringing.

When Override is activated toward an associated extension number of an ACD split and the split supervisor is busy, the call intrudes into the split supervisor's active call. When the split supervisor is idle, the call alerts the supervisor with 3-burst ringing. (The Override call does not enter the split's queue.)

Bridged Call

The Override feature can be used toward a terminal that is in a normal talk state with another terminal, even if a third terminal is bridged onto the connection.

Busy Verification of Lines

Override is denied when the called extension is being busy verified.

Call Coverage

When Override is used to place a call to an extension with Call Coverage active, the call does not redirect to coverage. The call rings an idle appearance (with 3-bust ringing) or enters an active appearance (with warning tone, when every appearance is active) at the originally called extension.

Call Forwarding—Busy and Don't Answer

When a called terminal has activated Call Forwarding—Busy and Don't Answer, an override call does not forward. Three-burst ringing is provided for an idle forwarding terminal, and the override call enters the conversation of a busy forwarding terminal.

Call Forwarding—Don't Answer

When a called terminal has activated Call Forwarding—Don't Answer, an override call does not forward. Three-burst ringing is provided for the idle forwarding terminal.

Call Forwarding—Follow Me

An Override call does not forward when Call Forwarding—Follow Me is active. Three-burst ringing is provided for an idle forwarding terminal, and the override call enters the conversation of a busy forwarding terminal.

Call Park

The switch denies Override toward an extension in call park.

Call Vectoring

Override calls cannot be placed to VDNs. When this is attempted, the switch returns intercept tone.

Call Waiting

Override has precedence over any call waiting (via the Call Waiting feature) on the called extension. However, Override is denied toward the line which is waiting.

Centralized Attendant Service

When a backup terminal for Centralized Attendant Service is handling a release link trunk call, the switch denies an attempt to enter the conversation by another terminal using the Override feature.

Conference—Attendant Six Party

Any attempt to use Override toward a terminal that is connected to a attendant conference is denied.

Conference—Three Party

Override is denied when directed toward a line connected to a three party conference call unless the line appears on a multiappearance terminal with more than one appearance. In this case, the override attempt routes to an idle appearance of the line, if any.

Data Protection

Override is denied when the called extension or the trunk to which the extension is connected has the Data Protection feature active.

Distributed Communications System

The Override feature works only on the local switch in a DCS. If directed toward an extension on a distant DCS node, the caller attempting to use override receives intercept treatment.

EUCD (Enhanced Uniform Call Distribution)

When Override is activated toward the individual extension number of a busy EUCD agent, the override call intrudes into the agent's active call. When Override is activated toward the individual extension number of an idle EUCD agent, the override call alerts the agent with 3-burst ringing.

When Override is activated toward an associated extension number of an EUCD split and the split supervisor is busy, the call intrudes into the split supervisor's active call. When the split supervisor is idle, the call alerts the supervisor with 3-burst ringing. (The Override call does not enter the split's queue.)

> **NOTE:** If the called agent (or split supervisor) is using a multiappearance terminal, an override call (in preference to intruding into the active call) will terminate to an idle appearance (if available) with 3-burst ringing. When no idle appearances are available, the override call will intrude into the active call.

Hold

The Hold feature interacts with the Override feature as follows:

- Override is allowed toward a voice terminal that has a call on hold.
- Override of a voice terminal's appearance that is on hold is denied. Busy tone is heard.

Hunting

An Override call does not hunt. The Override call completes to the called extension.

IPA (Interpartition Access)

A voice terminal user (in a partition other than Extension Partition 0) is allowed to place Override calls to extensions in the same partition group or in Extension Partition 0. When the user tries to place an Override call to an extension in any other partition group, the switch returns intercept treatment to the calling party.

A voice terminal user in Extension Partition 0 can place an Override call to any other extension in the switch.

Last Number Dialed

When a user places an Override call, the Override access code is not stored and redialed by the LND (Last Number Dialed) feature. The extension number dialed after the second dial tone is stored in LND memory.

Line Lockout

Busy tone is returned to a calling party who is attempting override toward a voice terminal in lockout.

Loudspeaker Paging Access

Override is denied to a voice terminal line connected to Loudspeaker Paging (making a page or waiting for answer-back).

Malicious Call Trace

If an Override call is attempted toward a line involved in a Malicious Call Trace, the calling party receives busy tone.

Precedence Calling

The Override feature is denied when directed toward any connection involving a Precedence Calling call with a precedence higher than ROUTINE.

Priority Calling

Override has precedence over any call waiting (via the Priority Calling feature) on the called extension. However, Override is denied toward the line which is waiting.

Privacy—Manual Exclusion

The Override feature allows a terminal user to enter a call even though Privacy—Manual Exclusion is active.

Queuing

Override is denied when the called extension is in an off-hook queue waiting for an idle trunk.

Restriction—Attendant Control of Voice Terminals

The use of Override is denied toward a terminal with Attendant Control of Voice Terminals—Termination restriction active.

Restriction—Voice Terminal Restrictions

An Override call to a terminal line with Termination or Manual Terminating Line restriction in effect is denied. If the restricted terminal is in a 2-party connection with an unrestricted voice terminal, override directed toward the unrestricted terminal is permitted.

Serial Calls

The Override feature is denied toward a line or trunk involved in a serial call.

Tenant Services

A voice terminal user (in a partition other than Extension Partition 0) is allowed to place Override calls to extensions in the same partition or in Extension Partition 0. When the user tries to place an Override call to an extension in any other partition, the switch returns intercept treatment to the calling party.

A voice terminal user in Extension Partition 0 can place an Override call to any other extension in the switch.

Trunk Verification—Attendant

If a 3-way connection has been established using the Override feature, Trunk Verification—Attendant is denied.

Trunk Verification—Voice Terminal

If a 3-way connection has been established using the Override feature, Trunk Verification—Voice Terminal is denied.

HARDWARE REQUIREMENTS

None.

FEATURE ADMINISTRATION

Assignment of the Override feature is on a per-terminal class-of-service basis. The customer can partially administer this feature using the SMT (System Management Terminal) or the TCM (Terminal Change Management) feature. This feature can also be administered using CSM (Centralized System

Management).

The following are the applicable MAAP and SMT procedures.

MAAP AND SMT PROCEDURES — OVERRIDE			
PROCEDURE	**WORD**	**PURPOSE**	**SMT**
000	1	Assigns the voice terminal class of service to an extension number.	Yes
010	1	Assigns Override to a voice terminal class of service.	Yes
054	2	Assigns the OVERRIDE button to a multiappearance voice terminal. The applicable encode is as follows: 5 Override.	Yes
350	1	Assigns the first digit of the dial access code (if required).	No
350	2	Assigns the Override dial access code. The applicable encode is as follows: 11 Override.	No

The following are the applicable TCM path names used with the AP 16.

TCM SCREENS — OVERRIDE	
PATH NAME	**PURPOSE**
terminal-change class-of-service attributes	Assigns Override to a voice terminal class of service.
terminal-change extensions attributes	Assigns the class of service to an extension number.
terminal-change terminal buttons	Assigns the OVERRIDE button to a multiappearance voice terminal.

The following are the applicable CSM Command Paths utilizing the **admin** area of TCM or FM.

CSM SCREENS — MASKS OVERRIDE		
APPL'N	**OBJECT**	**PURPOSE**
TCM	extension	Administers the voice terminal class of service to an extension number.
TCM	class-of-service	Administers the Override feature to a voice terminal class of service.
TCM	This command will be set type: i.e., 36-button, 12-button, bct, data-module, feature-module, coverage-module, or vds.	Administers the OVERRIDE button to a multiappearance voice terminal.
TCM/FM	first-digit	Assigns the first digit of the dial access code (if required).
TCM/FM	dial-access-code	Assigns the Override dial access code.

PERSONAL CENTRAL OFFICE LINE

DESCRIPTION

The Personal Central Office Line feature provides a multiappearance voice terminal user with direct access to dedicated CO (Central Office) trunks. Typical users are executives, dispatchers, or buyers with a high volume of calls going outside the switch. Businesses with specialized incoming traffic (such as a service department) can also benefit from these dedicated circuits.

Feature History and Development

This feature was first available on System 85 in Release 1. In Release 2, Version 2, the ability to transfer Personal CO Line calls was added.

USER OPERATIONS

The following are the user operating procedures for this feature.

To Access a Personal Central Office Line:

- Press the appearance (CO LINE PICKUP) button associated with the Personal CO Line. [Associated status I-use button lights.]
- Go off-hook. [CO dial tone is heard, and the green status lamp lights.]
- Dial the desired number.

To Release a Personal Central Office Line:

- Go on-hook.

To Answer an Incoming Call on a Personal Central Office Line:

- Press the appearance (CO LINE PICKUP) button associated with the Personal CO Line.
- Go off-hook.

CONSIDERATIONS

Trunk Types

Only public network access trunks can be assigned to this feature. These trunks include:

- CO (Central Office)
- FX (Foreign Exchange)
- 800 Service
- WATS (Wide Area Telecommunications Service).

Maximums

A maximum of 150 trunks can be designated as Personal Central Office Lines. These 150 trunks can all be assigned to one trunk group or spread out among as many as 150 trunk groups. This arrangement depends on trunk type, requirements of the supporting central office, and local requirements.

The same Personal Central Office Line can appear on from 1 to 16 different voice terminals.

Unassigned Personal Central Office Lines

An incoming call to a Personal Central Office Line that is not assigned to a voice terminal button routes to the attendant.

Voice Features

Most voice terminal features are not available on a Personal Central Office Line. Those feature that can be used are:

- Abbreviated Dialing*
- Conference—Three Party.
- Hold
- Last Number Dialed*
- Music-on-Hold Access
- Transfer

Intercept on Outgoing Calls

Intercept tone is received if:

- The user goes off-hook on an idle Personal Central Office Line that is a WATS 1-way incoming trunk
- The number dialed is invalid
- The terminal is restricted.

---

* Available only on Personal CO Lines administered as rotary out.

Single-Appearance Terminals and Straight Line Sets

The Personal CO Line feature cannot be assigned to single-appearance terminals. Also, single-appearance terminals (assigned as straight line sets in Procedure 051) cannot share a Personal CO Line appearance.

Hard and Soft Processor Swaps

Stable calls over Personal CO Lines endure a hard processor swap. However, calls cannot be placed over Personal CO Lines during a hard processor swap.

INTERACTIONS WITH OTHER FEATURES

The following System 85 features affect or are affected by the operation of this feature.

Abbreviated Dialing

The Abbreviated Dialing feature can be used to place calls over Personal CO Lines that are administered as ‘‘rotary out.’’

The Abbreviated Dialing feature cannot be used to place calls over Personal CO Lines that are administered as ‘‘touch-tone out.’’ In this case, the serving CO scans Personal CO lines to detect an off-hook signal. After the CO recognizes an off-hook, the CO returns dial tone to the calling party. System 85 software is not involved in this call-origination process. So, during the process, the System 85 does not invoke an originating register. Without this register, the System 85 cannot outpulse the stored digits.

CDRR (Call Detail Recording and Reporting)

The CDRR feature does not record calls made on a Personal Central Office Line appearance.

Extension Number Portability

A user’s extension number can be ported to another node, but their personal CO line number may have to change.

Last Number Dialed

The Last Number Dialed feature can be used to redial calls over Personal CO Lines that are administered as ‘‘rotary out.’’

The Last Number Dialed feature cannot be used to redial calls over Personal CO Lines that are administered as ‘‘touch-tone out.’’ In this case, the serving CO scans Personal CO lines to detect an off-hook signal. After the CO recognizes an off-hook, the CO returns dial tone to the calling party. System 85 software is not involved in this call-origination process. So, during the process, the System 85 does not invoke an originating register. Without this register, the System 85 cannot outpulse the stored digits.

Multiappearance Preselection and Preference

The Multiappearance Preselection and Preference feature does not automatically select Personal Central Office Line appearances.

Music-on-Hold Access

When assigned, Music-on-Hold is provided for held Personal Central Office Line appearances.

Power Failure Transfer

The Power Failure Transfer feature can be applied to Central Office trunks used as Personal CO Lines. However, the multiappearance voice terminal with the Personal CO Line cannot also be the designated station during the power failure.

Privacy—Manual Exclusion

Privacy—Manual Exclusion cannot be used to prevent bridging onto a Personal Central Office Line call.

Restriction—Attendant Control of Voice Terminals

Personal Central Office Line calls are not affected when an attendant activates a restriction toward an extension on a voice terminal.

Restriction—Voice Terminal Restrictions

Incoming calls on a Personal Central Office Line are not affected when the Voice Terminal Restrictions (Termination) feature is assigned to a line class of service.

SMDR (Station Message Detail Recording)

The SMDR feature does not record calls made on a Personal Central Office Line appearance.

Tenant Services

There are no tests in Procedure 057, Word 1 to ensure that every voice terminal (from 1 to 16) sharing a Personal CO Line belongs to the same extension partition. It is the responsibility of the system manager to ensure that these shared lines do not cross partition boundaries.

A Personal CO Line trunk group can be dedicated to each extension partition that uses the personal lines. (There is a maximum of 150 Personal CO Lines that can be spread among as many as 150 trunk groups.) When this is done, each trunk group can be assigned (in Procedure 270, Word 5) to the specific extension partition to which the trunk group terminates.

To minimize the consumption of Personal CO Line trunk groups in a partitioned System 85, these discrete personal lines can also be set up *to converge to* one (or a few) large trunk groups at the partitioned System 85. When this is done, the several trunk groups can be assigned to Extension Partition 0 in Procedure 270, Word 5.

NOTE: This specific trunking configuration is not a ''shared trunk group'' in the legal sense. The calling activity over Personal CO Line trunk groups would not be averaged. Rather, each CO line in the trunk group is assigned to terminate to a specific voice terminal (or set of voice terminals), and can only be used by the assigned terminal(s). Each trunk facility is dedicated to a partition; the *trunk-group numbers* are shared.

Transfer

When a call on a Personal Central Office Line is transferred to another party, the owner of the personal line temporarily loses control of the personal line. The owner cannot place or receive a call on that line until the Transfer call is finished. This can be avoided by setting up a 3-party conference and then placing the conference on hold. Then, at any time, the owner can reenter the connection and request use of the personal line.

Variable Format Call Detail Recording

The CDR feature does not record calls made on Personal Central Office Lines.

HARDWARE REQUIREMENTS

The Personal Central Office Line feature requires the following additional or special hardware.

- Multiappearance voice terminals
- Personal Central Office trunk circuits of an SN230 circuit pack (four circuits per SN230).

FEATURE ADMINISTRATION

Assignment of the Personal Central Office Line feature is on a per-voice terminal and a per-appearance button basis.

The customer can partially administer this feature using the SMT (System Management Terminal) or the TCM (Terminal Change Management) feature. The Personal CO Line feature can also be administered using CSM (Centralized System Management).

The following are the applicable MAAP and SMT procedures.

MAAP AND SMT PROCEDURES — PERSONAL CENTRAL OFFICE LINE			
PROCEDURE	**WORD**	**PURPOSE**	**SMT**
057	1	Assigns the trunk to an appearance button and sets the alerting option.	Yes
100	1	Assigns the dial access code and trunk type of a Personal CO Line trunk.	No
101	—	Administers the characteristics for the trunk group administered in Procedure 100, Word 1.	No
150	—	Assigns the SN230 equipment location of a Personal CO Line trunk to its trunk-group number.	No

The following are the applicable TCM path names used with the AP 16.

TCM SCREENS — PERSONAL CENTRAL OFFICE LINE	
PATH NAME	**PURPOSE**
terminal-change terminal personal-line	Displays or prints the Personal CO Line assignments.
terminal-change terminal buttons	Assigns the trunk to a button on a multiappearance voice terminal.

The following are the applicable CSM Command Paths utilizing the **admin** area of TCM or FM.

CSM SCREENS — MASKS PERSONAL CENTRAL OFFICE LINE		
APPL'N	**OBJECT**	**PURPOSE**
TCM	This command will be set type: i.e., 36-button, 12-button, bct, data-module, feature-module, coverage-module, or vds.	Administers the trunk to an appearance button and sets the alerting option.
FM	trk-grp	Assigns the dial access code and trunk type to a Personal CO Line trunk, and administers the characteristics and equipment location of the trunk to its trunk-group number.

PC/PBX CONNECTION

DESCRIPTION

The PC/PBX (Personal Computer/Private Branch Exchange) Connection feature is a set of PC-to-PBX interface products for System 85. These products offer the users of AT&T PCs (personal computers) and other IBM* compatible PCs the voice and data capabilities of a fully integrated voice/data workstation. In so doing they provide a set of communications-oriented services that make communications more efficient.

Configurations

Six different configurations (or Packages) can be used for the PC/PBX Connection feature. These break down into two main groups. One group, packages 1 and 2, communicate with the System 85 switch through a PC Cartridge in an associated 7404D voice terminal. The other group, packages 3, 4, 5, and 6, use a DCP expansion card in the PC itself for the communications interface with the switch. These groups are shown in Figures 85-1 and 85-2.

Added Benefits

Voice terminal users with the PC/PBX Connection receive PC benefits such as on-line directories and multiple call appearances. Users with the PC/PBX Connection are linked for easy access to other PCs, Modem Pooling, and on- and off-site computers.

Feature History and Development

This feature is first supported as its own terminal type (PC) in Release 2, Version 4. For earlier versions of System 85, Release 2 switch, the PC/PBX Connection can be retrofitted by administering it as terminal type BCT 510D (using Field 6 of Procedure 051).

USER OPERATIONS

For operational instructions, refer to one of the following PC/PBX Connection User's Guides. These operations depend on the PC and voice terminal type (refer to the following ''Hardware Requirements'' section).

---

* Registered trademark of the IBM Corporation.

- Package 1 (555-016-701)
- Package 2 (555-016-702)
- Package 3 (555-016-703)
- Package 4 (555-016-704)
- Package 5 (555-016-705)
- Package 6 (555-016-707).

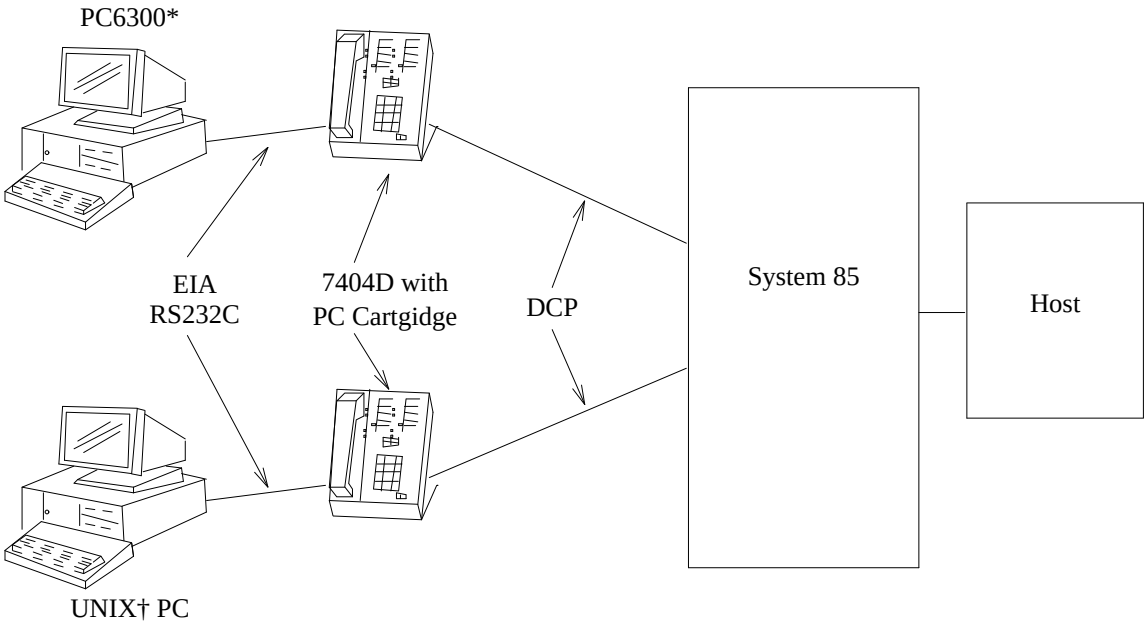

Figure 85-1. PC/PBX Connection Configuration (Packages 1 and 2)

* Other IBM-compatible PCs can be used, as well as the PC 6300.

† Registered trademark of AT&T.

CONSIDERATIONS

Use of Speakerphones

Most System 85 speakerphones can be used with the PC/PBX Connection.

Function Key Module

The Function Key Module of the 7405D can be used with the PC/PBX Connection.

Flexible Software

The Release 2, Version 4 software for the PC/PBX Connection feature is designed for flexible administration. The value and capabilities of an installed PC/PBX Connection depends on the abilities of the switch administrator. Knowledgeable switch administrators can tailor the PC/PBX Connection effectively to the needs of their organizations and personnel.

Internal Features

The PC/PBX Connection products provide extensive local directory capability. They also provide a Last Number Dialed capability that is separate from the System 85 Last Number Dialed feature.

Display Modules and Terminals

A voice terminal with display capabilities is not recommended for use with the DCP (Digital Communications Protocol) expansion feature of the PC/PBX Connection. If one is used, administer this voice terminal as a 7405D plus display module and data module.

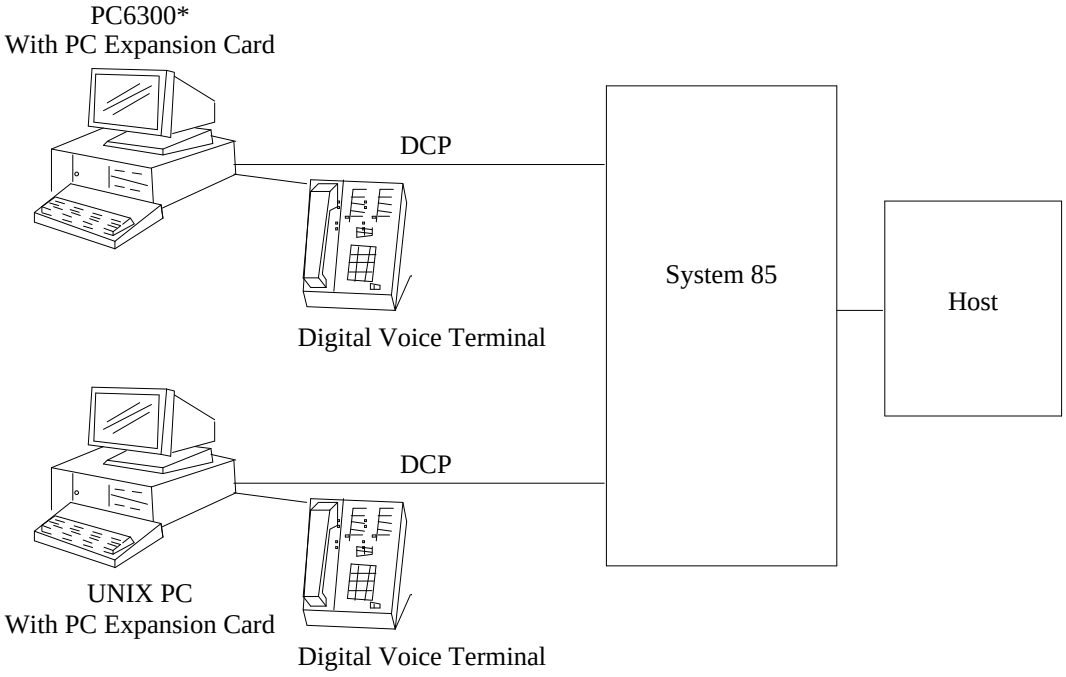

* Other IBM-compatible PCs can be used, as well as the PC 6300.

Figure 85-2. PC/PBX Connection Configuration (Packages 3, 4, 5, and 6)

Call Appearances

The user interface on a PC/PBX Connection supports four voice call appearances. The package, therefore, may not be optimal for users (such as attendants) with needs for many call appearances.

7404D Voice Terminal

The 7404D voice terminal with messaging cartridge cannot be used with the PC/PBX Connection.

The 7404D with PC cartridge cannot be used in Package 3, 4, 5, or 6.

INTERACTIONS WITH OTHER FEATURES

The PC/PBX Connection feature interacts with other features much as the standard voice terminals do.

Data Communications Access

The PC/PBX Connection feature uses a DCP interface and is not directly compatible with the Data Communications Access feature.

Data Protection

The PC/PBX Connection feature is used for data communications only, therefore Data Protection—Permanent should be assigned.

Host Computer Access

Both the PC/PBX Connection feature and the Host Computer Access feature use DCP interfaces. These features are therefore compatible.

Modem Pooling

Modem Pooling is needed if the PC/PBX Connection feature is used to place calls to, or receive calls from off-premises stations over analog trunks.

RESTRICTING FEATURE USE

The voice/data terminal on the PC/PBX Connection is subject to the same general restrictions as a voice terminal.

HARDWARE REQUIREMENTS

The additional hardware required by the PC/PBX Connection varies depending on the type of PC and voice terminal used.

Voice Terminals:

Package 1 or 2

- 7404D plus 31815 PC cartridge.

Package 3, 4, 5, or 6

- Any System 85 digital voice terminal (7400 Series), plus DCP expansion card.

PCs (Personal Computers):

Package 1, 3, or 5

- AT&T PC 6300 and compatibles, with MS-DOS* Version 2.11 or later existing versions
- AT&T PC 6300 Plus, with MS-DOS Version 3.1
- IBM PC and PC/XT†, with PC-DOS‡ Version 2.0 or later existing versions
- IBM PC/AT§, with PC-DOS Version 3.1.

Package 2, 4, or 6

- AT&T UNIX System PC Model 7300, with UNIX System Version 3.0
- AT&T UNIX System PC Model 3B1.

Cabling:

Package 1 or 2

---

* Trademark of the Microsoft Corporation.

† Trademark of the IBM Corporation.

‡ Registered trademark of the IBM Corporation.

§ Trademark of the IBM Corporation.

Standard EIA RS232C cable (supporting pins 2 through 8 and 20) male/female connector arrangement.

PC Accessories Requirements:

Package 1

- PC 6300 Expansion Card
- Serial asynchronous communications port (standard on AT&T PC 6300 and 6300 Plus)
- 256K RAM minimum
- 384K RAM recommended minimum for large integrated software applications such as concurrent Lotus 1-2-3*.

Package 2

- UNIX System PC Expansion Card
- 1 Mbyte RAM recommended.

Packages 3 and 5

- PC Expansion Card (8-bit, IBM bus-compatible)
- 320K RAM minimum
- 448K RAM recommended for large integrated software applications such as concurrent Lotus 1-2-3.

Packages 4 and 6

- UNIX System PC Expansion Card
- 1 Mbyte RAM recommended.

* Trademark of the Lotus Development Corporation.

System Connections:

Packages 1 and 2

- The RS232C port of the 7404D voice/data set is connected via an EIA RS232C cable to the RS232C port of the PC.
- The 7404D voice/data set has a modular digital port connection to System 85.
- Standard operating distance of the PC extension card from the PBX is 5,000 feet maximum for 24-gauge wire, or 4,000 feet for 26-gauge wire.

Packages 3, 4, 5, and 6

- The PC expansion card plugs into an expansion slot on the PC. The card has two standard, 8-pin modular jacks (line and phone).
- The digital phone plugs into the phone jack on the PC expansion card.
- The line jack on the card provides a digital port connection to System 85.
- Standard operating distance of the 7404D from the PBX is 5,000 feet maximum for 24-gauge wire, or 4,000 feet for 26-gauge wire.

FEATURE ADMINISTRATION

Administration guidelines in this section pertain to System 85, Release 2, Version 4. For earlier versions, refer to the Appendix in the PC/PBX Connection User's Guide (555-016-701), Packages 1, 2, 3, 4, 5, or 6.

NOTE: Switch administration guidelines for the PC/PBX Connection are documented as follows:

Packages 1 and 2: Loose-leaf instruction sheets are inserted into the User Guide for the first printing.

Package 3: Appendix D of the User Guide.

Package 4: The specific User Guide appendix has not been determined.

Packages 5 and 6: References will be made to see the User Guides for Packages 3 and 4, respectively.

The PC/PBX Connection feature is administered on a per-station basis using the MAAP (Maintenance and Administration Panel). The customer can also administer this feature using the SMT (System Management Terminal). This feature can also be administered using CSM (Centralized System Management).

The following are the applicable MAAP and SMT procedures for R2 V4.

MAAP AND SMT PROCEDURES — PC/PBX CONNECTION			
PROCEDURE	**WORDS**	**PURPOSE**	**SMT**
051	1	Assigns and removes terminal types.	Yes
052	1-2	Assigns and removes line buttons.	Yes
053	1	Assigns and removes the Manual Signaling feature buttons.	Yes
053	2	Assigns and removes Manual Message Waiting feature buttons.	Yes
054	1	Assigns and removes miscellaneous feature buttons.	Yes
054	2	Assigns and removes Custom Calling feature buttons.	Yes
054	4	Assigns and removes Display feature buttons.	Yes
055	1	Assigns and removes Terminal Busy feature buttons.	Yes
055	2	Assigns and removes One Button Transfer feature buttons.	Yes
056	1	Assigns and removes Intercom buttons.	Yes
057	1-3	Assigns and removes CO line buttons.	Yes
058	1	Performs a station swap between two equipment locations.	Yes
059	1-5	Assigns and removes Abbreviated Dialing buttons.	Yes
063	2	Assigns and removes Automatic Message Waiting buttons.	Yes
070	4	Displays information about the terminal equipment assigned to an equipment location.	Yes

The following are the applicable CSM Command Paths utilizing the **admin** area of TCM or FM.

CSM SCREENS — MASKS PC/PBX CONNECTIONS		
APPL'N	**OBJECT**	**PURPOSE**
TCM	This command will be set type: i.e., 36-button, 12-button, bct, data-module, feature-module, coverage-module, or vds.	This command provides administration (add, change, remove, and display) for the following attributes and button feature assignments: terminal types, line buttons, Manual Signaling feature buttons, Manual Message Waiting buttons, miscellaneous feature buttons, display feature buttons, Terminal Busy buttons, One-Button Transfer buttons, Intercom buttons, CO line buttons, Abbreviated Dialing buttons, and Automatic Message Waiting lamps.
TCM	extension	Administers station swaps between two analog equipment locations. Assigns automatic message waiting lamp to analog voice terminal.

POWER FAILURE TRANSFER

DESCRIPTION

This feature provides service during a local power failure for selected voice terminals on the switch by directly connecting (transferring) these terminals to predesignated CO (Central Office) trunks. These selected terminals are sometimes referred to as Power Failure Transfer Terminals.

Power Failure Transfer service is useful if reserve power is not provided, or if the battery reserve is likely to become depleted (long term power failures). This feature is also provided when certain major alarm conditions occur.

Emergency Transfer Panel

The emergency transfer panel automatically transfers the selected voice terminals to predesignated CO trunks, bypassing the switch (see Figure 86-1). There are two types of emergency transfer panel:

- **574-5**

  The 574-5 panel is usually used for the emergency transfer capability. Each panel can transfer five CO trunks. Circuitry within this panel can accept either loop-start or ground-start CO trunks. On this panel, each CO trunk is set up to connect to a voice terminal. Voice terminals connected to the 574-5 panel *do not require additional wiring or a ground start button*. Power for this panel comes from the CO trunks.

- **609A**

  The 609A panel can also be used for the emergency transfer capability but is usually used for the night transfer or alternate console position capabilities. Each panel can transfer ten trunks. This panel accepts ground-start CO trunks only. With this panel, each trunk is set-up to connect to a voice terminal. Voice terminals connected to the 609A panel *require an additional wire leading from the panel to a ground start button*.

  NOTE: These Power Failure Transfer terminals must be analog and FCC registered. The 2500-series voice terminals should be used with this feature.

Service Activation

Power Failure Transfer occurs when the System 85 alarm circuit releases. When this occurs, relay contacts on the emergency transfer panel connect the voice terminal lines directly to the CO trunk pairs. The alarm circuit releases when any of the following occurs:

- Common controller fails (e.g., DC/DC converter failures, severe memory faults, etc.). If there are dual controllers, both must fail.
- Commercial ac power fails, and reserve power is not provided. (This is after the common controller's standard backup power has been exhausted. This holdover power lasts a minimum of 10 minutes.)
- Commercial ac power fails, and if battery reserve is provided, it depletes to a level below approximately 44 volts.
- A fuse feeding the emergency transfer panel blows.
- Maintenance personnel set the EMERGENCY TRANSFER switch to the ACT (activate) position.
- Twenty-five percent of the modules of a system become inoperative.

- TMS (Time Multiplexed Switch) becomes inoperative.

When a power failure transfer occurs, the System 85 switch is bypassed. All switch features and restrictions are inoperative for the transferred stations and trunks. When a transfer occurs because the TMS or 25 percent of the switch modules are inoperative, terminals that are not transferred may still be operating. System 85 features and restrictions will still apply to these terminals.

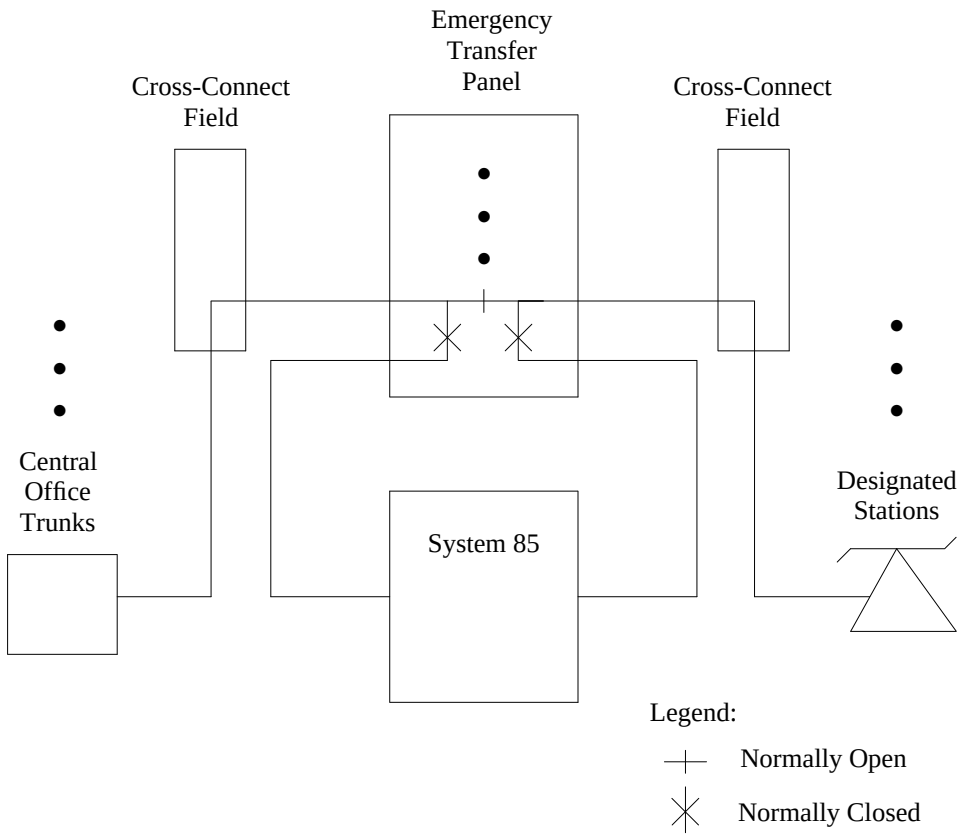

Figure 86-1. Power Failure Transfer Configuration

If less than 25 percent of the modules within a system are inoperative, intermodule communication and the use of all features is still possible in the remaining operating modules. If the TMS becomes inoperative, communications and the use of features within the same module is still possible. However, communications between modules is not possible when the TMS is inoperative.

Typically, designated stations are chosen by determining who needs to receive incoming or make outgoing calls during a power failure. Upper management, maintenance, security, and medical personnel are examples of people who may need to make outgoing calls. Upper management and maintenance personnel or ACD and CMS agents are examples of people who may need to receive incoming calls.

Feature History and Development

This feature was first available on System 85 in Release 1. It was initially supported by the 609A panel and is now supported by the 574-5 panel.

USER OPERATIONS

The following are the user operating procedures when Power Failure Transfer is activated. The Power Failure Transfer feature goes into effect automatically.

To Receive a CO Call on a Power Failure Transfer Terminal:

No special operating procedure is required to receive a CO call. Distinctive ringing is not provided to the power transfer station when a CO call is placed to that station (normal CO ringing is provided).

To Originate a Call From a Power Failure Transfer Terminal

When a 574-5 Panel is used:

- Go off-hook. [CO Dial tone]
- Dial a destination number.

When a 609A Panel is used:

- Go off-hook.
- Press the ground start button. [CO Dial tone]
- Dial a destination number.

CONSIDERATIONS

Lost Calls

All calls in progress and/or established calls are lost when a power failure transfer occurs.

Power Failure Connections

All power failure connections (calls in progress or established calls) are terminated when the system reinitializes after power is restored or the processor is recovered. Normal operations are resumed after the modules are initialized. Depending on the size of the system, this can take 1 to 30 minutes. When recovering from a power failure, the system will be restored to the night service mode. When regular system dial tone is available by going off-hook, service is restored.

RMI (Remote Module Interface)

An RMI is used to support remote modules. This device detects a need for power failure transfer at the remote module. If the RMI detects that the module link isn't active, the RMI will send a signal to activate power failure transfer for the remote module. If a remote module has power failure transfer active, the local switch doesn't necessarily need to have power failure transfer active. However, if the local switch has power failure transfer active, the remote module will also have power failure transfer active.

Trunk Usage

This feature is normally not used on Foreign Exchange (FX) and Wide Area Telecommunications Service (WATS) trunks. When these trunks are powered by a source removed from the customer's premises (preferably from the CO), they may be used for power failure trunks. This is a local CO option.

Voice Terminal Maximums

The maximum number of voice terminal lines that can have this feature is limited by the number of CO trunks available and the type and number of emergency transfer panels. A voice terminal line can be assigned to each CO trunk. Each 574-5 panel can transfer five CO trunk pairs to five voice terminal lines. Each 609A panel can transfer ten CO trunk pairs to ten voice terminal lines.

Dial ''0'' Calls

Dial ''0'' calls to the attendant and station-to-station calls are not possible if there is a power failure transfer condition. (This is not true for the TMS/25 percent of modules inoperative condition.)

Hard Processor Swaps

A hard processor swap does not invoke the Power Failure Transfer feature. A hard swap is a fairly brief event (30 to 40 seconds), and stable calls will endure the hard swap. After the hard swap is finished, call processing resumes.

INTERACTIONS WITH OTHER FEATURES

The following System 85 features affect or are affected by the operation of this feature.

DID (Direct Inward Dialing)

A DID call cannot be received or used during the power failure transfer mode of operation.

Multiple Listed Directory Numbers

During a power failure, a switch that uses incoming (or 2-way) CO trunks for non-DID LDN (Listed Directory Number) service can transfer these LDN calls to predesignated voice terminals.

Personal Central Office Line

Central Office trunks used for Personal Central Office Lines can also be used for power failure transfer. However, the multiappearance voice terminal used with the Personal Central Office Line cannot be used as a designated station in a power failure transfer.

Unattended Console Service — Preselected Call Routing

When full (flexible) night station service is activated and a power failure occurs, the terminal line(s) assigned by the attendant is lost from memory. When commercial power is restored and reinitialization occurs, night station service calls are routed to the default terminal.

RESTRICTING FEATURE USE

None.

HARDWARE REQUIREMENTS

574-5 Type Emergency Transfer Panel

Prewired 574-5 panels, manufactured by Porta Systems Corporation, provide connections to emergency transfer facilities. The 574-5 panels should be mounted in the cross-connect field for ease of cross-connecting to the circuits.

The 574-5 panel must be grounded to the exact point where the switch is grounded or to the single ground of the switch. A No. 14 AWG conductor may be used if sufficient mechanical protection of the conductor is provided. This ground conductor provides ground for ground start CO trunks.

609A Emergency Transfer Panel

Prewired 609A panels provide connections to emergency transfer facilities. The 609A panels should be mounted in the cross-connect field for ease of cross-connecting to the circuits.

The 609A panel must be grounded to the exact point where the switch is grounded or to the single ground of the switch. A No. 14 AWG conductor may be used if sufficient mechanical protection of the conductor is provided. This ground conductor provides ground for ground start CO trunks.

Voice Terminals

Each predesignated analog voice terminal used with this feature must be compatible with the serving CO. For example, if the CO accepts only rotary-type dialing, then rotary dial type terminals must be used. The touch-tone dialing sets used with this feature are the 2500-type voice terminals. Each voice terminal used with this feature must be FCC registered.

For Switches with a 609A emergency transfer panel, each voice terminal must have a ground start button, such as a 551A key attached to the phone to originate calls during the power failure transfer operation.

FEATURE ADMINISTRATION

The Power Failure Transfer feature is provided by hardware and requires no administration.

PRECEDENCE CALLING

DESCRIPTION

Precedence Calling operates in AUTOVONs (Automatic Voice Networks). However, Precedence Calling can be adapted for use with any private network that uses a ''STAR'' or hub-like configuration. Two capabilities are provided: *preemption* and automatic *diversion to attendant assistance*. These capabilities help to ensure the rapid completion of important calls. Precedence Calling is specifically designed for national defense and emergency calling situations. On System 85, the Precedence Calling feature enables the switch to function effectively in the AUTOVON environment and can extend this ability to an associated DCS (Distributed Communications System) network.

AUTOVON Access

The AUTOVON Network: The network itself is part of the Defense Communications System. It provides private network services between U.S. Government Offices and Installations with defense or defense-related missions and functions. Certain local government and private organization sites (Civil Defense, Red Cross, contractors, etc.) also may be granted AUTOVON access.

Network access (AUTOVON) works in the same way as ETN (Electronic Tandem Network) or the APLT (Advanced Private Line Termination) feature (see the APLT feature). A System 85 switch can access the AUTOVON either as an isolated switch (single subscriber switch on the network) or as a gateway for a private network configuration. The private network configuration is composed of a central or *Hub* switch that provides access to the AUTOVON (gateway service) for other switches in the network. The central switch is individually connected to the other nodes in a ''STAR'' network configuration (direct link between each node and the Hub or central node).

> **NOTE:** For maximum functionality, it is recommended that the private network be set up as a DCS network. Tie trunks that are to be used for Precedence Calling (precedence capable trunks) must be dedicated to AUTOVON access; however, the DCIU links do not need to be dedicated to AUTOVON use.

A user can initiate Precedence Calling and access the AUTOVON using a dial access code. Callers can receive attendant assistance for AUTOVON or precedence calls by dialing the attendant access code. If AUTOVON access is not authorized or the precedence level attempted is not authorized to the terminal being used, the call is automatically routed to the attendant for assistance.

Preemption

Preemption is one of the capabilities that make Precedence Calling work. The AUTOVON is designed to serve the needs of the defense community under both normal and emergency conditions. Under emergency conditions, the undue delay or failure of a high precedence call is an unacceptable condition. For this reason, when no idle facilities are available, preemption permits a higher precedence call (calls with an established precedence level other than ROUTINE) to arbitrarily disconnect a trunk or line being used by a call of lesser precedence, and then seize that facility for its own use.

Incoming Precedence Calls:

For a high precedence call (other than ROUTINE), the switch will automatically preempt an established connection if it can determine that the established connection is of a lower precedence than the incoming call. Otherwise, the incoming precedence call is routed to the attendant for completion assistance (see Diversion). The call may have already preempted a trunk connection to reach the System 85 switch.

Outgoing Precedence Calls:

For a high precedence call (other than ROUTINE), the switch will automatically preempt an AUTOVON trunk, or precedence capable tie trunk:

a. If all trunks are busy, and

b. The switch can determine that one or more of the calls in progress are of lower precedence than the call being placed.

Otherwise, the outgoing precedence call is routed to the attendant for completion assistance.

Once in the AUTOVON system, the call retains its precedence level, and this precedence level continues to be used to preempt circuits as required to complete successfully.

Two forms of preemption are available:

Automatic

The system uses the precedence of a call being attempted, and if an existing connection with a lower precedence is using needed facilities, preempts the established call to complete the higher precedence call.

Manual

The attendant can change the precedence level if justified, manually preempt an established connection, or attempt other methods available (such as paging) to complete the call to the desired party or an acceptable substitute.

Diversion to Attendant Assistance

One of the capabilities that makes Precedence Calling work is diversion to attendant assistance. If a high precedence call (PRIORITY or higher) cannot be completed automatically within a reasonable period of time, it is routed to the attendant for completion assistance. This applies to precedence calls that cannot be completed for any reason, including calls that reach the called extension but are not answered within a reasonable period of time (usually 30 seconds).

Precedence Levels

In the AUTOVON system, all calls are assigned a precedence. This precedence is then used to determine what calls can preempt what other calls. The following five precedence levels (in descending order of precedence) are available:

- Flash Override
- Flash
- Immediate
- Priority
- Routine.

NOTE: The term ‘‘Priority’’ in this feature has no connection with the separate and distinct feature Priority Calling. Priority Calling and Priority Precedence are not related in any way.

Precedence Signaling

The precedence level of a call is identified by a DTMF (Dual Tone Multifrequency) signal. The signals used and their corresponding precedence levels are shown in Table 87-A.

Table 87-1. Precedence Level Signaling

PRECEDENCE	FREQUENCIES	DIGIT
Flash Override	697 — 1633	0
Flash	770 — 1633	1
Immediate	852 — 1633	2
Priority	941 — 1633	3
Routine	NONE	4

Preemption Warning Tone

A Preemption Warning Tone (440-hertz + 620-hertz for 3 seconds) is heard by all parties to a connection that is about to be preempted. If the call is a normal 2-party connection, the connection will be torn down after a 2.5-second time-out unless the parties go on-hook first. If the call is a conference call, only the party being called will be removed, and the remaining conferees can continue normally.

Feature History and Development

Precedence Calling is a function of AUTOVON Access and was first available on System 85 with Release 1. Subsequent enhancements have included the following:

- Gateway type AUTOVON access services for a DCS. Introduced in Release 2, Version 1.
- Hardware independent Precedence Calling uses software routines to provide Precedence Calling capabilities from standard voice terminals and attendant consoles. First available in System 85 with Release 2, Version 1.

USER OPERATIONS

The following are the user operating procedures for this feature.

Receiving Precedence Calls at a Voice Terminal

To answer a precedence call received at an idle station:

- Distinctive ringing (3 bursts of ringing tone) is heard.
- Go off-hook to answer.

To answer a precedence call from an active 2-party connection:

Precedence warning tone (440-hertz + 620-hertz for 3 seconds) is heard by both parties.

- Go on-hook. [Station receiving the precedence call hears distinctive ringing.]
- Go off-hook to answer.

Precedence call received while active on a conference call:

Precedence warning tone (440-hertz + 620-hertz for 3 seconds) is heard by all parties to the connection.

- All parties remain off-hook. [Called party is automatically disconnected from the conference after 2.5 seconds]
- When disconnected, go on-hook. [Party receiving the precedence call hears distinctive ringing.]
- Go off-hook to answer.
- Remaining conferees can continue with the conference call.

Placing a Precedence Call From a Voice Terminal

Using Direct Outward Dialing:

Precedence calls can be dialed directly from any voice terminal whose class of service is authorized to use the required precedence level.

- Go off-hook. [Dial tone]
- Dial the Precedence Calling feature access code. [Recall (second) dial tone]
- Dial the call precedence level code. [Recall dial tone is silenced until a precedence capable circuit is seized; then second dial tone is returned.]

  (If precedence alerting tone is heard (rapid ringback), the call is being diverted to an attendant for completion assistance, otherwise)
- Dial the destination extension code. [Call-progress tones]

With attendant-assisted calling:

Outgoing precedence calls can be routed to an attendant either by dialing the local attendant directly for assistance (see Dial Access to Attendant feature), dialing the AUTOVON Access to Attendant code, or through Diversion. Diversions on an outgoing call takes place when:

a. A precedence code is used that is higher than that authorized to the class of service of the voice terminal being used.

b. No precedence capable circuits are available, and the precedence level of the call is insufficient to preempt circuits currently in use.

- When the attendant answers, provide necessary instructions for placing the call.

Attendant Procedures

A *diverted* precedence call is identified at the console by the PRIO lamp lighting and the ICI display. If the PRIO lamp flashes (at 30 pulses per minute), more than one precedence call is waiting in the priority queue.

To use automatic preemption:

- Answer the alerting loop by pressing the appropriate loop button or press ANSWER. [ICI shows current precedence level of the call if it was initiated as a precedence call.]
- Obtain necessary instructions from calling party.
- If the precedence level of the call needs to be set (not previously established) or raised:
  1. Press the Set Precedence Level key.
  2. Press the appropriate precedence level key. [Dial tone]

     NOTE: The precedence level keys can be used at any time before the outgoing circuit has been seized.

  Precedence Level Keys are used to:

  Establish a precedence level for a call that was not initiated over a precedence capable facility,

  or

  Raise the precedence level of a call as appropriate.
- Press START.

- To extend the call to the final destination either:
  1. Dial the extension number or trunk group access code, or press the appropriate DXS or Direct Trunk Group Selection keys,

     or

  2. Press the RELEASE button to allow the calling party to finish dialing,

     or

  3. Press the HOLD button to remain connected to the call (if the Serial Calling feature is to be used).

To use manual preemption for an outgoing call:

Like the preceding automatic preemption, a call is received at the attendant console.

- Press START.
- Press VERFY.
- Dial the appropriate trunk group access code.
- Press a precedence level key lower than the precedence of the call being placed (generally start with ROUTINE). [Busy trunks being used by a corresponding or lower precedence level call are identified by a lighted lamp.]

  NOTE: Operating a precedence level key after the trunk group has been selected does not change the precedence level of the call being placed.
- Select the trunk to be preempted by pressing the DXS button associated with a lighted lamp.
- Press the PREEMPT console key.
- Complete the call by:
  1. Dialing the destination number,

     or

  2. Press RELEASE and allow the calling party to finish dialing.
- To remain connected to the call (for Serial Calling or later assistance) press HOLD.

To recall the AUTOVON DSA (Dial Service Assistance) operator while receiving AUTOVON dial tone:

- Press the FLASH key.

  (NOTE: To recall the DSA operator, the call must have previously received DSA operator assistance.)

CONSIDERATIONS

DCS (Distributed Communications Service) Configuration

A DCS network interfaced to AUTOVON must use the direct connection DCS configuration (see the DCS feature) to the AUTOVON gateway switch. Nodes without direct links to the gateway switch or hub will not have AUTOVON access.

Precedence Calling Trunks

From an AUTOVON perspective, two types of tie trunks can be used to connect nodes of a DCS or to connect the DCS hub to the AUTOVON system. These are ROUTINE Only tie trunks or Precedence Capable tie trunks. Calls connected over ROUTINE Only tie trunks cannot be preempted nor can they use precedence calling to preempt other calls.

INTERACTIONS WITH OTHER FEATURES

AAR (Automatic Alternate Routing) and ARS (Automatic Route Selection)

AUTOVON (Precedence Capable) trunk groups must not be included in AAR or ARS patterns. AAR can be used to route incoming precedence calls within a DCS. AUTOVON routing patterns are set within the DCS in administrative Procedure 305, Word 1 (see Feature Administration).

ACD (Automatic Call Distribution)

The precedence level of AUTOVON calls that are directed to or forwarded to an ACD split are checked. If the precedence level is higher than ROUTINE, the call does not enter the split's queue. Instead, the call is redirected to the attendant queue.

Attendant Control of Trunk Group Access

This feature functions normally for AUTOVON trunks. When in effect, Precedence Calling calls are routed to the attendant priority queue.

Call Coverage

The Call Coverage feature functions normally for a Precedence Calling incoming call. The call will route to coverage if the established coverage criteria are met. However, a Precedence Calling incoming call does not route to group coverage (i.e., Message Center, ACD Group, or AUDIX).

Call Vectoring

The precedence level of AUTOVON calls that are directed to or forwarded to a VDN are checked. If the precedence level is higher than ROUTINE, the call does not terminate to the vector. Instead, the call is redirected to the attendant queue.

Conference—Three Party

If a tie trunk being used on a 3-party conference is preempted by the Precedence Calling feature, all parties to the conference will hear preemption warning tone; the affected trunk will then be made idle, and the conference call will revert to an otherwise normal 2-party connection.

Conference—Attendant Six Party

If a tie trunk being used on an attendant conference is preempted by the Precedence Calling feature, all parties to the conference will hear preemption warning tone. The affected trunk will then be made idle, and the conference call will remain in effect minus the preempted trunk circuit.

Data Call Setup

Precedence Calling incoming calls cannot preempt calls connected using the Data Call Setup feature. Precedence calls directed to data call setup connections are routed to the attendant.

Data Protection

The Data Protection feature takes precedence over the Precedence Calling feature. That is, a Precedence Calling call does not preempt a call with Data Protection active. Precedence calls directed to extensions with data protection active are diverted to attendant assistance. The attendant cannot override data protection by using attendant preemption. Data protection permanent should not be administered to an AUTOVON trunk as it invalidates the Precedence Calling feature.

Intercept Treatment

Incoming Precedence Calling calls that receive intercept treatment will be given Attendant Intercept, regardless of other options that may be administered.

Last Number Dialed

The Last Number Dialed feature completely stores and redials the digits dialed during a Precedence Calling call.

Override

The Override feature is denied when attempted toward any connection involving a precedence call higher than ROUTINE.

Queuing

Queuing (except attendant queue) is denied on a Precedence Calling call. Precedence calls that cannot preempt the needed facility are directed to the attendant rather than being placed in a facility queue.

Remote Access

Remote Access can be used in conjunction with the Precedence Calling feature if precedence calling is administered to class-of-service 31.

Restriction—Attendant Control of Voice Terminals

This feature functions normally for Precedence Calling calls. Calls to or from a restricted voice terminal route to the attendant priority queue for processing.

Restriction—Miscellaneous Trunk Restrictions

The Miscellaneous Trunk Restrictions feature does not restrict access to Precedence Capable trunk groups within the AUTOVON Access star configuration. However, when trunk-group dial access codes are used to access ROUTINE Only trunk groups, this access can be limited by Miscellaneous Trunk Restrictions.

Route Advance

If Routine Precedence is specified for an outgoing call and no precedence capable trunks are available, the call can be routed via Routine Only or nonprecedence capable trunks. For calls with a precedence higher than ROUTINE, only precedence capable trunks may be included in the Route Advance pattern.

Tenant Services

The Precedence Calling feature cannot be used in a partitioned switch.

RESTRICTING FEATURE USE

The basic voice terminal restriction features can be used to restrict access to or from the AUTOVON and the use of the Precedence Calling feature. These features are:

- Restriction—Attendant Control of Voice Terminals
- Restriction—Voice Terminal Restrictions.

Additionally, Precedence Calling must be specifically allowed in a voice terminal class of service and for a specific trunk group.

The Data Protection feature can be used to deny Precedence Calling preemption toward a specific terminal or trunk.

HARDWARE REQUIREMENTS

The Precedence Calling feature requires the use of the following specific hardware items:

- SN233 release link trunk circuit packs (administered as APLT tie trunks; four trunk circuits to a circuit pack)
- SN251 touch-tone dialing receiver/register circuit packs
- SN252 touch-tone calling sender circuit pack
- The 8-character display attendant console.

FEATURE ADMINISTRATION

The Precedence Calling feature is administered using the MAAP (Maintenance and Administration Panel). The customer has limited administration capabilities using the SMT (System Management Terminal) or the TCM (Terminal Change Management) feature. This feature can also be administered using CSM (Centralized System Management).

The following are the applicable MAAP and SMT procedures.

MAAP AND SMT PROCEDURES — PRECEDENCE CALLING			
PROCEDURE	**WORD**	**PURPOSE**	**SMT**
000	1	Assigns the voice terminal class of service to an extension number.	Yes
010	4	Assigns the maximum precedence level to a voice terminal class of service.	Yes
100	1	Assigns the trunk group characteristics, including trunk type and Route Advance pattern. Trunk type must be APLT (encodes 12 to 15).	No
101	—	Assigns APLT feature allowed to trunk precedence capable trunks.	No
103	—	Displays and assigns network association for trunk groups. Must set AAR prefix digit.	Yes*
150	—	Assigns trunks to trunk groups.	No
203	1	Assigns the AUTOVON buttons to the attendant console(s). The applicable encodes are as follows: 43 Manual Preemption button 44 Display Call Precedence Level 45 Display Called Number 46 Flash button 47 Set Precedence.	No
204	1	Assigns AUTOVON precedence identification and ICI for trunk groups to attendant console ICI field. Applicable precedence levels and message numbers are as follows: Flash Override Msg 300 Flash Msg 301 Immediate Msg 302 Priority Msg 303 Routine Msg 304	No
275	3	Assigns local switch number (Home NPA). Must be coordinated with the AUTOVON dialing plan if AUTOVON access is involved.	Yes
275	4	Assigns maximum preemption levels for incoming calls, station originated calls, and attendant calls to the system class of service. Also specifies the AUTOVON Interface switch number (use DCS node number).	Yes

MAAP AND SMT PROCEDURES PRECEDENCE CALLING (Contd)			
PROCEDURE	**WORD**	**PURPOSE**	**SMT**
305	1	Displays and assigns the AUTOVON destination node for a trunk group and specifies the maximum precedence level (0 to 4, or dash) of each AUTOVON trunk group.	Yes*
305	2	Displays and assigns AUTOVON destination node numbering including home office code (NNX). A thousand's digit selects 1,000 numbers within the office code to which AUTOVON calls can route, or a ''-'' allows call routing to all 10,000 numbers.	Yes*
350	1	Assigns the first digit of the AUTOVON dial access code (if required).	No
350	2	Assigns the AUTOVON dial access codes. The applicable encodes are: 82 AUTOVON Precedence Calling 83 AUTOVON Attendant Assistance.	No
356	1	Assigns a dial digit to each precedence level.	No
* Indicates a display only function for the SMT.			

The following is the applicable TCM path name used with the AP 16.

TCM SCREEN — PRECEDENCE CALLING	
PATH NAME	**PURPOSE**
terminal-change class-of-service attributes	Assigns Precedence Calling to a terminal class of service.

The following are the applicable CSM Command Paths utilizing the **admin** area of TCM or FM.

CSM SCREENS — MASKS PRECEDENCE CALLING		
APPL'N	**OBJECT**	**PURPOSE**
TCM	extension	Administers the voice terminal class of service to an extension.
TCM	class-of-service	Assigns the maximum precedence level to a voice terminal class of service.
FM	trk-grp	Administers (adds, changes, displays, and removes) the following trunk-group attributes and features: trunk-group characteristics, including trunk type and Route Advance patterns (trunk type must be APLT), assigns the APLT feature allowance to precedence capable trunks, assigns network association to trunk groups (must set AAR prefix digit), and assigns trunks to trunk groups.
TCM	control-keys	Assigns the AUTOVON buttons to the attendant consoles.
TCM	console-messages	Assigns AUTOVON precedence identification and ICI for trunk groups to attendant console ICI field.
TCM/FM	sys-cos	Assigns local switch number (home NPA). Must be coordinated with the AUTOVON dialing plan if AUTOVON access is involved. Assigns maximum preemption levels for incoming calls to the system class of service, and also specifies the AUTOVON switch number (use DCS node number).
FM	autovon	Adds, changes, displays, or removes AUTOVON destination data. This includes trunk groups terminating at the AUTOVON switch, precedence levels (1 to 5) associated with the trunk group(s), AUTOVON switch location code (NNX), thousandths digit(s) of extensions valid at the switch, and (for System 85, R2 V3) first digits of extensions. This command also adds more trunk groups to the destination or more valid extensions at the AUTOVON switch.
TCM/FM	first-digit	Assigns the first digit of the AUTOVON dial access code (if required).
TCM/FM	dial-access-code	Assigns the AUTOVON dial access codes, and assigns a dial digit to each precedence level.
TCM	precedence-digit	Adds, changes or removes a precedence calling dialed digit assignment. Precedence calling is provided for the AUTOVON network (a military network which provides preemption capabilities for the purpose of national defense). A preemption level can be assigned for the precedence calling features including flash, flash override, immediate, priority, and routine.

PRIORITY CALLING

DESCRIPTION

The Priority Calling feature allows a user to use distinctive 3-burst ringing to call an idle single-appearance terminal or an idle appearance [including originating (only) appearances] of a multiappearance terminal.

> **NOTE:** There is no correlation between the term ''Priority'' as used in this feature and ''Priority Precedence'' as used in the Precedence Calling feature.

Priority Calling also allows the user to signal a busy single-appearance terminal. When signaled, the party at the busy single-appearance terminal receives a 3-burst tone. The 3-burst tone is three 0.1-second, 400-hertz beeps. The user can answer the priority call immediately by using the Hold feature or by finishing the call and going on-hook.

Priority Calling reduces the chances of a busy single-appearance terminal missing an important call. It also identifies an important call that the called party might otherwise let go unanswered or let go to a covering user. For multiappearance voice terminals, if no idle appearance is available, the switch returns busy tone to the calling party.

Feature History and Development

This feature was first available on System 85 in Release 1. There have been no changes to this feature since Release 1.

USER OPERATIONS

The following are the user operating procedures for this feature.

To Make a Priority Call to a Busy Single-Appearance Voice Terminal:

- Go off-hook or press an idle appearance. [Dial tone]
- Dial the Priority Calling access code or press PRIORITY. [Second dial tone]
- Dial the desired voice terminal. [The called party hears a 3-burst tone. The calling party hears a special ringback tone.]

To Answer a Priority Call When 3-Burst Ringing Is Heard at an Idle Voice Terminal:

- Go off-hook or press the ringing appearance. [A 2-party connection is made.]

To Answer a Priority Call While on a 2-Way Connection

Without ending the current 2-way connection:

- Momentarily press the switchhook,

  or

- Press RECALL. [The second party is put into soft hold. Recall dial tone received.]
- Dial the answer-hold access code. [The second party is put on hard hold. The called party is connected to the incoming priority call.]

By ending the current 2-way connection:

- Go on-hook. [The second party is disconnected. The switch rings the called party.]
- Go off-hook. [A 2-party connection is made.]

To Answer a Priority Call While on a Call at a Multiappearance Voice Terminal Without Ending the Current 2-Way Connection:

- Press the HOLD button. [The second party is put on hold. The HOLD green status lamp lights.]
- Press the appropriate appearance button. [The called party is connected to the incoming priority call.]

CONSIDERATIONS

Canceling Priority Calling

If the calling party goes on-hook, priority calling is canceled.

Internal Calling

Priority Calling applies only to internal calls.

Intercept Tone

Intercept tone is heard by the caller when the Priority Calling access code is dialed, and when Priority Calling is either restricted or not assigned.

Busy Tone

Busy tone is heard if Priority Calling is denied. Priority Calling can occur only when the called terminal is in a stable talking condition. Possible unstable or transient conditions include:

- Receiving dial tone
- In a talking state with an attendant
- Dialing
- Receiving ringback, busy, reorder, or intercept tone
- Momentarily pressing the switchhook to put another call into soft hold
- Receiving ringing.

Hard and Soft Processor Swaps

If a priority call is waiting on a busy single-appearance terminal when a hard processor swap occurs, the waiting call does not endure the hard swap.

The Priority Calling feature operates normally during a soft processor swap.

INTERACTIONS WITH OTHER FEATURES

The following System 85 features affect or are affected by the operation of this feature.

Automatic Callback

If a busy party has a priority call waiting and another party tries to call the busy party, the switch returns busy tone to the calling party. The calling party can now activate Automatic Callback toward the busy party. However, the callback sequence is delayed until there are no calls waiting.

If a calling party activates Automatic Callback toward a busy terminal and then becomes busy with another call, the switch does not allow application of the Priority Calling feature by another party toward the calling party.

ACD (Automatic Call Distribution)

When Priority Calling is activated toward a busy individual terminal in an ACD split, the call waits on that terminal. When Priority Calling is activated toward a busy ACD split, the call always waits on the controlling terminal (the call does not enter the split's queue).

Priority calls cannot wait on an ACD agent's single-appearance voice terminal while an observer (using agent override) is connected to the agent's call.

Bridged Call

Priority Calling is partially allowed toward shared extensions with only one appearance. When only the straight line set is active on this type of shared extension, the switch allows a Priority Call to wait. However, when a multiappearance terminal is active on the shared extension, the incoming Priority Call is denied. Busy tone is returned to the calling party.

While a priority call is waiting on a straight line set, a multiappearance voice terminal can be used to bridge onto the active call. However, the waiting call cannot be retrieved until the multiappearance voice terminal leaves the connection.

Priority Calling is partially allowed toward shared extensions with more than one appearance. Terminating priority calls are routed to an idle appearance (if available), and 3-burst ringing is provided. When every appearance is busy, the switch returns busy tone to the calling party.

Busy Verification of Lines

A verification attempt made via the Busy Verification of Lines feature has precedence over a priority call on the line being verified. However, if the attendant attempts to busy verify a terminal line that is waiting for another line, the busy verification attempt is temporarily denied and routed to reorder tone.

Call Coverage

When using Priority Calling to place a call to an extension that has Call Coverage active, the call does not redirect to coverage. The call rings (with 3-burst ringing) or waits (with 3-burst tone) at the originally called extension. When every appearance of a called multiappearance voice terminal is busy, the switch returns busy tone to a priority caller.

The Consult/Return option of the Call Coverage feature enables covering users to consult with and return calls to principals. Consult/Return calls are treated as priority calls that override coverage. Like other priority calls, Consult/Return calls can terminate to an originating (only) appearance.

Call Forwarding—Busy and Don't Answer

When Call Forwarding is in effect, the forwarding operation occurs before Priority Calling is allowed. There are four possible operations. If the originally called voice terminal is busy and the forwarded-to voice terminal is idle, calls forward to and ring at the forwarded-to voice terminal. If the originally called voice terminal is busy and the forwarded-to voice terminal is busy, calls forward to and wait on the forwarded-to voice terminal. If there is no answer at the originally called voice terminal and the forwarded-to voice terminal is idle, calls forward to and ring at the forwarded-to voice terminal. If there is no answer at the originally called voice terminal and the forwarded-to voice terminal is busy, calls forward to and wait on the forwarded-to voice terminal.

Call Forwarding—Don't Answer

When Call Forwarding is in effect, the forwarding operation occurs before Priority Calling is allowed. There are two possible operations. If there is no answer at the originally called voice terminal and the forwarded-to voice terminal is idle, calls forward to and ring at the forwarded-to voice terminal. If there is no answer at the originally called voice terminal and the forwarded-to voice terminal is busy, calls forward to and wait on the forwarded-to voice terminal.

Call Forwarding—Follow Me

When Call Forwarding is active at the called voice terminal, the forwarding operation occurs before Priority Calling is allowed. There are two possible operations. Calls forward to and ring at the forwarded-to voice terminal (if this voice terminal is idle). Otherwise, calls forward to and wait on the forwarded-to voice terminal (if this voice terminal is busy).

Call Park

A Priority Call is denied when the Call Park feature is active at the called voice terminal.

Call Vectoring

Priority calls cannot be placed to VDNs. When this is attempted, the switch returns intercept tone.

Call Waiting

The Call Waiting feature is an *independent* companion feature to the Priority Calling feature. Call Waiting allows a busy called party to receive one or two 400-hertz beeps when a call is waiting.

Conference—Attendant Six Party

Priority Calling is denied when the called terminal is involved in an attendant established conference call.

Conference—Three Party

When calling a single-appearance voice terminal in a conference created by the Conference—Three Party feature using the Priority Calling feature, the call is denied.

When calling a multiappearance voice terminal in a conference created by the Conference—Three Party feature using the Priority Calling feature, the call completes to an idle appearance. If no appearance is idle, the call is denied.

Data Protection

Priority Calling is denied when the Data Protection feature is active on a call.

DDC (Direct Department Calling)

When Priority Calling is activated toward a busy individual DDC group terminal, the call waits on that terminal. When Priority Calling is activated toward a busy DDC group, the call always waits on the controlling terminal (the call does not enter the group queue).

EUCD (Enhanced Uniform Call Distribution)

When Priority Calling is activated toward a busy individual terminal in an EUCD split, the call waits on that terminal. When Priority Calling is activated toward a busy EUCD split, the call always waits on the controlling terminal (the call does not enter the split's queue).

Hold

Priority Calling is denied when either soft hold or hard hold is active at a called single-appearance voice terminal.

Hunting

Hunting is not performed when Priority Calling is activated toward a terminal line in a hunting group. The priority call either waits on a single-appearance voice terminal or terminates to an idle appearance on a multiappearance voice terminal.

IPA (Interpartition Access)

A voice terminal user (in an extension partition other than Extension Partition 0) is allowed to place priority calls within the user's partition group or to Extension Partition 0. When the user tries to activate Priority Calling toward an extension in any other partition group, the switch returns intercept treatment to the calling party.

A voice terminal user in Extension Partition 0 can place a priority call to any other extension in the switch.

Whenever Priority Calling is allowed, the switch provides 3-burst ringing or 3-burst waiting tone for the called voice terminal.

Last Number Dialed

When a user places a priority call, the Priority Calling access code is not stored and redialed by the LND (Last Number Dialed) feature. The extension number dialed after the second dial tone is stored in LND memory.

Line Lockout

Busy tone is returned to a calling party who is attempting a priority call toward a voice terminal in lockout.

Loudspeaker Paging Access

A call is not allowed to wait on a line that has accessed Loudspeaker Paging.

Malicious Call Trace

If a priority call is attempted toward a line involved in a Malicious Call Trace, the calling party receives busy tone.

Override

Override is not allowed toward a line which is waiting, but is allowed toward the 2-party call that has a call waiting.

Queuing

The callback sequence associated with Queuing is delayed until there are no waiting calls.

Recorded Telephone Dictation Access

Priority Calling is denied when Recorded Telephone Dictation Access is active at the called terminal.

Restriction—Attendant Control of Voice Terminals

If an attendant restricts call termination to a voice terminal, Priority Calling is also restricted to that terminal.

Restriction—Voice Terminal Restrictions

A voice terminal that is assigned the Termination Voice Terminal Restriction cannot receive Priority Calls.

Tenant Services

A voice terminal user (in an extension partition other than Extension Partition 0) is allowed to place priority calls within the user's partition or to Extension Partition 0. When the user tries to activate Priority Calling toward an extension in any other partition, the switch returns intercept treatment to the calling party.

A voice terminal user in Extension Partition 0 can place a priority call to any other extension in the switch.

Whenever Priority Calling is allowed, the switch provides 3-burst ringing or 3-burst waiting tone for the called voice terminal.

Transfer

Priority Calling is denied toward a single-appearance terminal with a Transfer in progress.

When the Priority Calling feature is activated toward a multiappearance terminal with a Transfer in progress, the call completes to an idle appearance. If no appearance is idle, the priority call is denied.

Trunk Verification—Attendant and Voice Terminal

If the trunk is being held or answered by a terminal using the answer-hold code of the Priority Calling feature, Trunk Verification is denied.

UCD (Uniform Call Distribution)

When Priority Calling is activated toward a busy individual UCD group terminal, the call waits on that terminal. When Priority Calling is activated toward a busy UCD group, the call always waits on the controlling terminal (the call does not enter the group's queue).

HARDWARE REQUIREMENTS

None.

FEATURE ADMINISTRATION

Assignment of the Call Waiting feature enables the Priority Calling feature within the switch. Assignment of the Priority Calling feature is on a per-terminal class-of-service basis. The customer can partially administer this feature using the SMT (System Management Terminal). This feature can also be administered using CSM (Centralized System Management).

The following are the applicable MAAP and SMT procedures.

MAAP AND SMT PROCEDURES — PRIORITY CALLING			
PROCEDURE	**WORD**	**PURPOSE**	**SMT**
000	1	Assigns the voice terminal class of service to an extension number.	Yes
010	1	Assigns Priority Calling to a terminal class of service.	Yes
054	2	Administers the Priority Calling button to a multiappearance voice terminal. The applicable encode is as follows: 2 Priority Calling.	Yes
275	1	Assigns Call Waiting to the system class of service.	Yes
350	1	Assigns the first digit of the dial access code (if required).	No
350	2	Assigns the dial access code for the Priority Calling feature. The applicable encode is as follows: 7 Priority Calling.	No

The following are the applicable TCM path names used with the AP 16.

TCM SCREENS — PRIORITY CALLING	
PATH NAME	**PURPOSE**
terminal-change class-of-service attributes	Assigns Priority Calling (Call Waiting Originating) to a voice terminal class of service.
terminal-change extensions attributes	Assigns the class of service to an extension number.
terminal-change terminal buttons	Assigns the Priority Calling button (cwo) to a multiappearance voice terminal.

The following are the applicable CSM Command Paths utilizing the **admin** area of TCM or FM.

CSM SCREENS — MASKS PRIORITY CALLING		
APPL'N	**OBJECT**	**PURPOSE**
TCM	extension	Assigns the voice terminal class of service to an extension number.
TCM	class-of-service	Assigns Priority Calling to a terminal class of service.
TCM	This command will be set type: i.e., 36-button, 12-button, bct, data-module, feature-module, coverage-module, or vds.	Administers the Priority Calling button to a multiappearance voice terminal.
TCM/FM	sys-cos	Assigns Call Waiting to the system class of service.
TCM/FM	first-digit	Assigns the first digit of the dial access code (if required).
TCM/FM	dial-access-code	Assigns the dial access code to the Priority Calling feature.

PRIVACY—ATTENDANT LOCKOUT

DESCRIPTION

This feature prevents the attendant from reentering (bridging on to) a 2-party connection held on the console, unless recalled by a voice terminal user.

Feature History and Development

This feature was first available on System 85 in Release 1. There have been no changes to this feature since Release 1.

USER OPERATIONS

The following are the user operating procedures for this feature.

To Initiate Attendant Lockout:

- Calling party is connected to an attendant. [ATND lamp lights.]
- Press START. [Calling party is split away from the attendant, the SPLIT lamp lights, and dial tone is heard.]
- Dial the called party's extension. [Ringback tone is heard, and the RING lamp lights.]
- If the attendant presses HOLD before the called party answers: [HOLD lamp lights. The ATND lamp goes out.]
  a. The attendant is released from the call. [Calling party hears ringback tone.]
  b. Called party answers the call. [The calling and called parties are connected together, the ANS lamp lights, the RING lamp goes out, and Attendant Lockout is activated.]
- If the attendant does not press HOLD before the called party answers:
  a. The attendant and the called party are connected. [ANS lamp lights.]
  b. Attendant announces the call.
  c. Attendant presses HOLD. [The called and calling parties are connected, the HOLD lamp lights, and Attendant Lockout is activated.]

To Recall the Attendant:

- Be sure there is a 2-party connection. [HOLD and ANS lamps are lit on the console.]
- Press RECALL,

or

- Momentarily press the switchhook. [The ANS lamp flashes, and ringback tone is heard by both parties.]

To Reenter a Previously Locked-Out Call:

— After one party has gone on-hook: [ANS lamp goes out.]
  - Press the appropriate loop button.

— After one party has pressed RECALL or momentarily pressed the switchhook: [ANS lamp flashes.]
  - Press the appropriate loop button.

CONSIDERATIONS

When Attendant Lockout Applies

The Attendant Lockout feature applies when:

- The two parties are on the same attendant console switched loop.
- One of the parties is on a voice terminal line (as opposed to a trunk).
- The voice terminal user has not gone on-hook.
- The voice terminal user has not momentarily pressed the switchhook causing attendant recall.

Reentering Calls

The attendant can reenter a call before the called party has answered. If the called party answers while the attendant is on the line, the attendant is split away. The attendant then presses the HOLD key and is released. Attendant Lockout is then activated.

INTERACTIONS WITH OTHER FEATURES

The following System 85 features affect or are affected by the operation of this feature.

Attendant Auto—Manual Splitting

Attendant Recall Privacy works with the Splitting feature to cause automatic splitting. Manual splitting/unsplitting is disabled. The Privacy feature overrides the Attendant Auto—Manual Splitting feature, and the SPLIT button is not functional. Privacy is essentially a form of automatic splitting that prevents the attendant from bridging onto a talking connection. The Attendant Lockout feature does not override splitting; however, it denies the attendant the ability to reenter an established connection held on the console, unless recalled by a voice terminal.

Busy Verification of Lines

The attendant is prevented from busy verifying a terminal line that is connected to a loop held on the attendant console.

Conference—Attendant Six Party

When the attendant reenters a conference connection in answer to a recall, the attendant and all conferees are connected. Attendant Recall Privacy is denied.

Serial Calls

When Attendant Lockout is assigned, the attendant cannot reenter a trunk-to-terminal/terminal-to-trunk serial call without being recalled. Attendant Lockout is automatically disabled for trunk-to-trunk serial calls.

Tenant Services

The Attendant Lockout feature is not partitioned. This feature is assigned to the entire switch in Procedure 200, Word 1. If assigned, no attendant in the switch can reenter a call held on the console. If not assigned, every attendant in the switch can reenter a call held on the console.

Timed Recall on Outgoing Calls

If Attendant Lockout is provided, the attendant cannot release after a timed recall by pressing the HOLD button.

Trunk-to-Trunk Connections

Attendant Lockout is automatically disabled for trunk-to-trunk calls.

HARDWARE REQUIREMENTS

None.

FEATURE ADMINISTRATION

Assignment of the Privacy—Attendant Lockout feature is on a per-system basis. This feature is administered using the MAAP. This feature can also be administered using CSM (Centralized System Management).

The following is the applicable MAAP procedure.

MAAP PROCEDURE — PRIVACY—ATTENDANT LOCKOUT		
PROCEDURE	**WORD**	**PURPOSE**
200	1	Administers the Privacy—Attendant Lockout feature.

The following is the applicable CSM Command Path utilizing the **admin** area of TCM or FM.

CSM SCREEN — MASK PRIVACY — ATTENDANT LOCKOUT		
APPL'N	**OBJECT**	**PURPOSE**
TCM	console-features	Assigns the Privacy — Attendant Lockout feature to all attendant consoles on a switch.

PRIVACY—MANUAL EXCLUSION

DESCRIPTION

The Privacy—Manual Exclusion feature prevents other terminal users with an image of the same appearance from bridging onto an active call on that appearance. Activating Manual Exclusion does not interrupt the call in progress.

Privacy—Manual Exclusion is useful at voice terminals where the user has an occasional need for assured privacy but a general need for other users to pick up (bridge onto) calls. This feature is transient in that it applies only to the specific call for which it has been activated. When that call ends, the feature activation is cancelled.

Feature History and Development

This feature was first available on System 85 in Release 1. There have been no changes to this feature since Release 1.

USER OPERATIONS

The following are the user operating procedures for this feature.

To Activate Manual Exclusion:

- Be sure there is a 2-party connection and Manual Exclusion is not activated. [Green status lamp is not lit.]
- Press XCLUSION. [Green status lamp lights. Manual Exclusion is activated.]

To Deactivate Manual Exclusion:

- Be sure there is a 2-party connection and Manual Exclusion is activated. [Green status lamp is lit.]
- Go on-hook or press XCLUSION. [Green status lamp goes out.]

CONSIDERATIONS

Separate Exclusion Buttons

Each extension number on a given terminal requiring the Manual Exclusion feature must be assigned a separate XCLUSION button. Manual Exclusion is limited to one appearance of an extension. It cannot be assigned to the same extension number on another terminal.

Activating Manual Exclusion

Privacy—Manual Exclusion can be activated for the originating appearance, the terminating appearance, or both.

If both the originating and the terminating appearances are shared with another terminal, Manual Exclusion must be activated by both the calling party and the called party to ensure complete privacy for the call.

INTERACTIONS WITH OTHER FEATURES

The following System 85 features affect or are affected by the operation of this feature.

Bridged Call

Bridging onto an appearance that has Manual Exclusion active is not allowed. The switch returns reorder tone.

If a party is already bridged onto a call when Manual Exclusion is activated, the switch removes the bridged party from the connection and returns reorder tone.

Busy Verification of Lines

Activating Manual Exclusion on an extension does not prevent an attendant from busy verifying the line.

Hold

An appearance which is placed on hold while Manual Exclusion is active remains in Manual Exclusion.

Intercom—Automatic and Intercom—Manual

An automatic or manual intercom cannot be manually excluded.

Override

The switch allows an Override call to complete even if Manual Exclusion is active for the called extension. The Override call terminates to an idle appearance (if available). If an idle appearance is not available, the Override call enters the connection and warning tone is provided.

Personal Central Office Line

Manual Exclusion cannot be applied to a Personal CO Line appearance.

HARDWARE REQUIREMENTS

Multiappearance voice terminals are required for this feature.

NOTE: The Manual Exclusion feature, requiring an XCLUSION button, cannot be assigned to a straight line set.

FEATURE ADMINISTRATION

Assignment of the Privacy—Manual Exclusion feature is on a per-terminal basis. The customer can fully administer this feature using the SMT (System Management Terminal) or the TCM (Terminal Change Management) feature. This feature can also be administered using CSM (Centralized System Management).

The following is the applicable MAAP and SMT procedure.

MAAP AND SMT PROCEDURE — PRIVACY—MANUAL EXCLUSION			
PROCEDURE	**WORD**	**PURPOSE**	**SMT**
054	1	Assigns the XCLUSION button to a multiappearance voice terminal. The applicable encode is as follows: 8 Manual Exclusion.	Yes

The following is the applicable TCM path name used with the AP 16.

TCM SCREEN — PRIVACY—MANUAL EXCLUSION	
PATH NAME	**PURPOSE**
terminal-change terminal buttons	Assigns the XCLUSION button to a multiappearance voice terminal.

The following is the applicable CSM Command Path utilizing the **admin** area of TCM or FM.

CSM SCREEN — MASK PRIVACY — MANUAL EXCLUSION		
APPL'N	**OBJECT**	**PURPOSE**
TCM	This command will be set type: i.e., 36-button, 12-button, bct, data-module, feature-module, coverage-module, or vds.	Assigns the XCLUSION button to a multi-appearance voice terminal.

QUEUING

DESCRIPTION

When all the accessible routes (trunk groups) for a particular call are busy, the switch automatically places the call in queue. A queue is a space in memory where information about these calls is stored. During periods of high call volume, queuing improves caller efficiency by reducing or eliminating repeat dialing attempts. It can also improve trunk utilization by maintaining high trunk group occupancy, allowing fewer trunks to carry the same call volume.

Queuing can be assigned to intertandem tie trunks, access tie trunks, Central Office trunks, Foreign Exchange trunks, and Wide Area Telecommunications Service trunks. Each trunk group has its own queue that is either ringback or off-hook. With ringback queuing, the caller goes on-hook (hangs up) and waits for a ringback call from the switch when an idle trunk becomes available. If a main or satellite location has ringback queuing, the caller must dial his/her extension number to receive the ringback call. With off-hook queuing, the calling party waits off-hook for the next available trunk. As an option, music or a recorded announcement can be provided while the calling party waits off-hook.

Time-in-Queue-Limit

The amount of time a call can remain in queue can be either unlimited or limited by a time-out value. In addition to the type of queuing, trunk groups can be assigned a time-out value, which is called the time-in-queue-limit. The queue time-out options are as follows:

- Ringback queue with no time-in-queue-limit available for terminals only
- Ringback queue with a time-in-queue-limit of 1 to 60 minutes in 1-minute increments available for terminals and tie trunks
- Off-hook queue with time-in-queue-limit of up to 4 minutes in 0.1-minute increments available for terminals, trunks, local attendants, and Centralized Attendant Service.

The switch drops a call from queue when it exceeds the time-in-queue-limit, unless it is an AAR or ARS call. For these calls, the switch makes one final attempt to find an available trunk before dropping the call. The switch compares the caller's default FRL with a preset threshold and raises the FRL to a higher (also preset) level if it is greater than or equal to the threshold. Calls in a ringback queue are dropped without notice to the caller. Callers waiting in an off-hook queue receive a tone warning them that their call is about to be dropped.

Queue Servicing

The switch processes calls in queue on a first-in, first-out basis. For off-hook queuing, the switch always serves the head-of-queue (the first call to enter the queue) first. This, however, is not always true for ringback queuing. A person with a call in a ringback queue can place and receive other calls while awaiting ringback. If the head-of-queue is busy on another call or does not answer the ringback call, the switch tries to ring the next person with a call in queue. If the switch finds an idle line and services the call, the next caller in queue becomes the starting point for the next search. Callers that are busy or do not answer the ringback lose their place in queue. The switch removes a call from queue if a terminal is busy during two ringback attempts in a 3-minute period.

TYPES OF QUEUING

Four types of queuing are available. They offer ringback queuing and off-hook queuing as well as combinations of these two kinds of queuing. For off-hook queuing, a trunk group can be assigned two queues: a *priority queue* and a *nonpriority queue*. The switch serves calls in the nonpriority queue only when the priority queue is empty. Ringback queuing is always nonpriority. The four types of queuing are:

Type 1 *Off-Hook Queuing:* All calls enter a single off-hook queue.

Type 2 *Ringback/Priority Off-Hook Queuing:* A priority off-hook queue serves attendant-originated, attendant-extended, and remote access calls. All other calls enter a ringback queue.

Type 3 *Off-Hook/Priority Off-Hook Queuing:* Incoming tie, remote access, off-premises, and attendant calls enter a priority off-hook queue. A nonpriority off-hook queue serves calls from terminals assigned to the local switch.

Type 4 *Ringback/Priority Off-Hook Queuing:* Local calls enter a ringback queue. A priority off-hook queue serves all other calls.

Feature History and Development

This feature was first available on System 85 in Release 1.

USER OPERATIONS

The following are the user operating procedures for this feature.

Off-Hook Queuing

Off-hook queuing is provided automatically by the switch. The only operation required of the user is to remain off-hook.

To Enter a Ringback Queue

Using an Access Code (Trunk-Group, ARS, or AAR):

- Go off-hook. [Dial tone]
- Dial the appropriate access code (Trunk-Group, AAR, or ARS). [Second dial tone]
- Dial the desired telephone number. [Confirmation tone]
- If calling from a subtending switch, dial your voice terminal's extension number.
- Go on-hook within 4 seconds.

To Complete a Queued ARS or AAR Call:

- Wait for the queuing callback. [The switch is scanning for an idle trunk.]
- Receive the queuing callback (3-burst ringing for a local voice terminal).
- Go off-hook before the system-wide Don't Answer Timing Interval elapses.

  NOTE: If reorder tone is heard upon going off-hook, the reserved trunk was already seized at the distant end. To return to the head of queue, go on-hook.

- Wait for the switch to outpulse the previously dialed digits. [Ringback tone]

  NOTE: If reorder tone is heard after the switch outpulses the digits, the call was blocked during routing. Go on-hook, and try the call later.

To Complete a Queued Trunk-Group Access Call:

- Wait for the queuing callback. [The switch is scanning for an idle trunk.]
- Receive the queuing callback (3-burst ringing for a local voice terminal).
- Go off-hook before the system-wide Don't Answer Timing Interval elapses. [Dial tone]

  NOTE: If reorder tone is heard upon going off-hook, the reserved trunk was already seized at the distant end. To return to the head of queue, go on-hook.

- Dial the destination telephone number. [Ringback tone]

  NOTE: If reorder tone is heard after the switch outpulses the digits, the call was blocked during routing. Go on-hook, and try the call later.

To Remove Yourself From a Ringback Queue:

- Go off-hook, while the switch is scanning for an available trunk. [Dial tone]
- Dial the Cancel Outgoing Trunk Queuing access code. [Confirmation tone]
- Go on-hook.

Flow Diagram

To help conceptualize this complex feature, a flow diagram describing the Queuing feature is provided in Figure 91-1. This diagram does not show all of the decisions made in the Queuing software. The diagram does, however, unify many of the different Queuing functions.

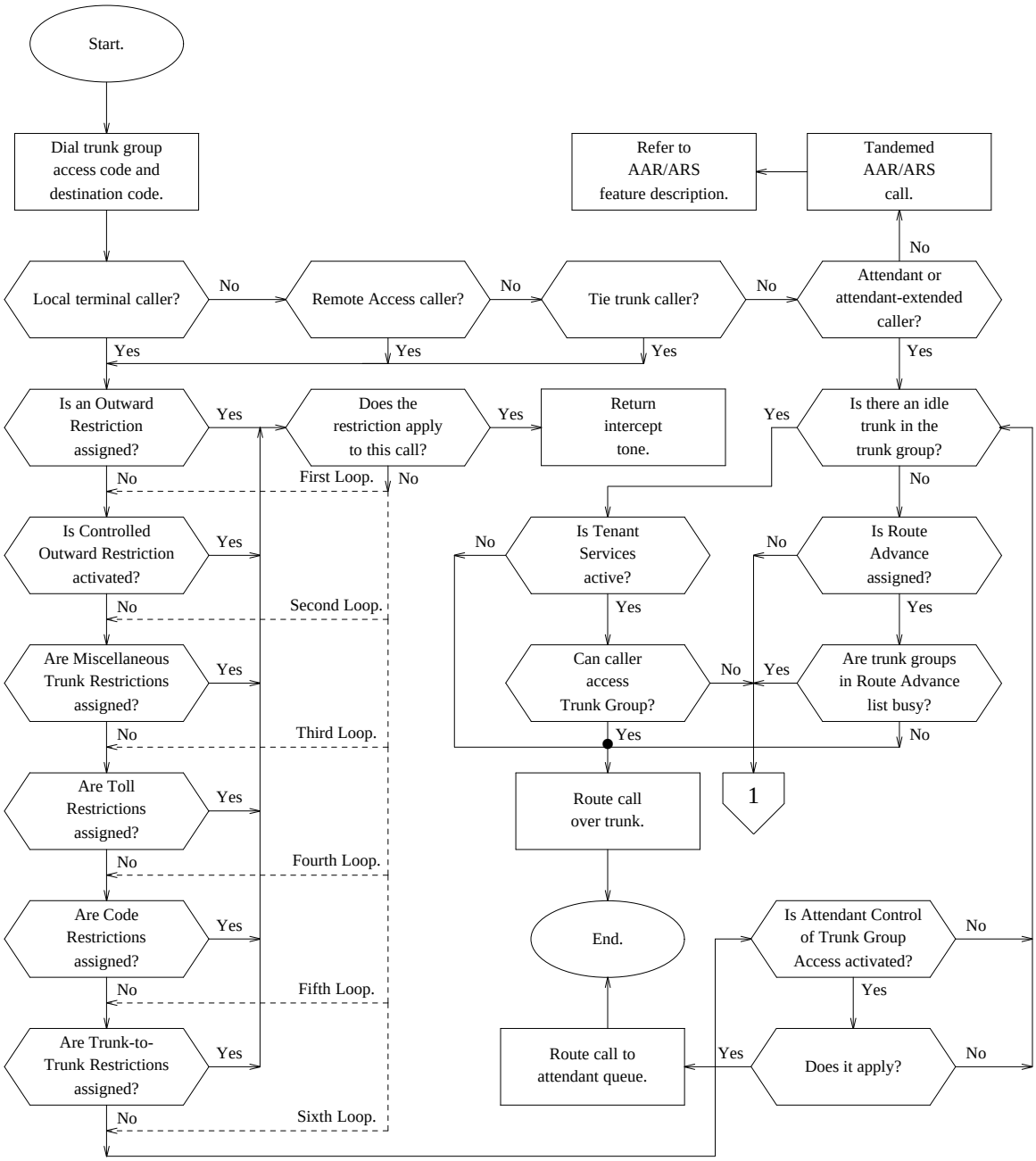

Figure 91-1. Queuing Feature Flow

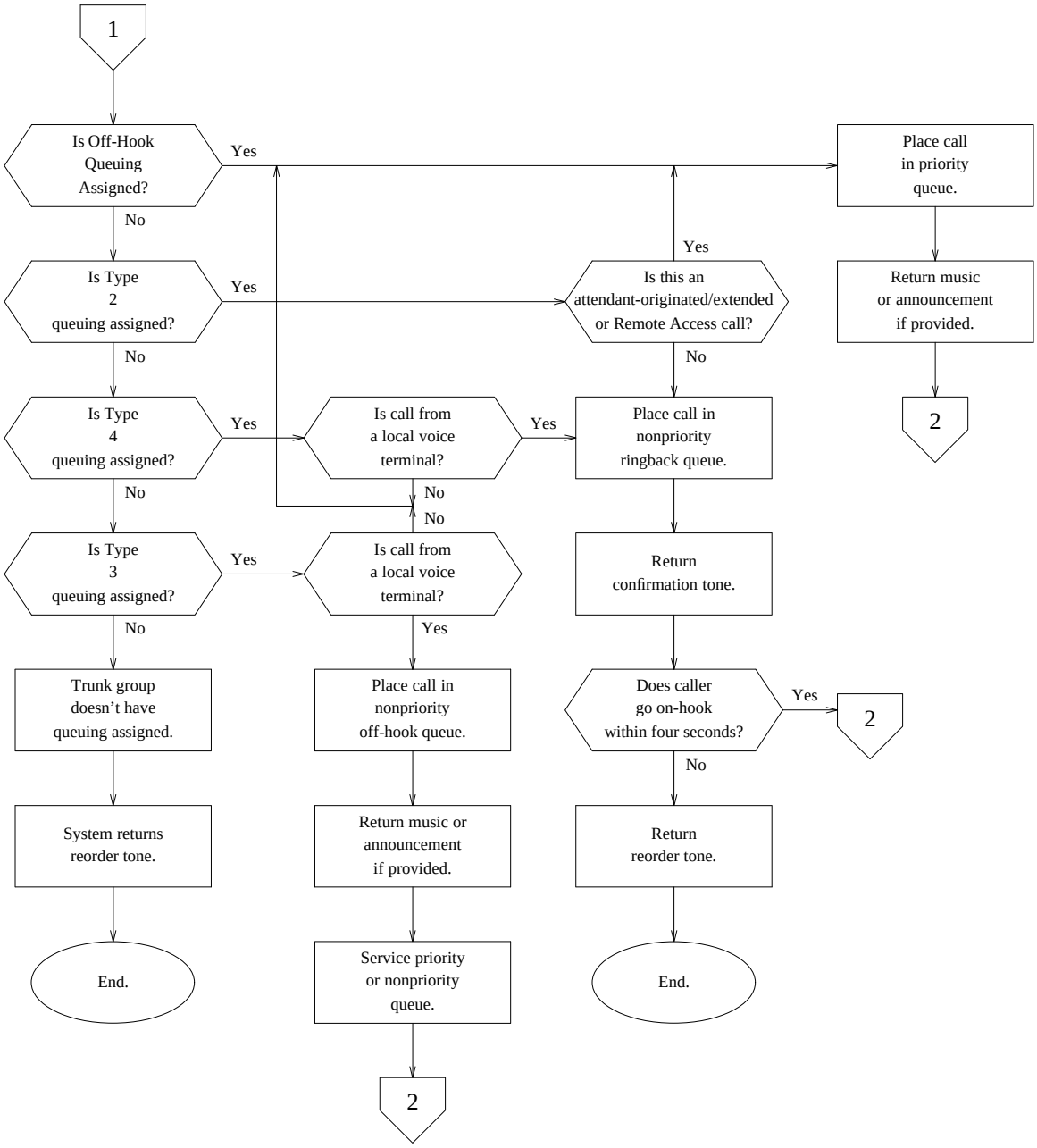

Figure 91-1. Queuing Feature Flow (Sheet 2 of 3)

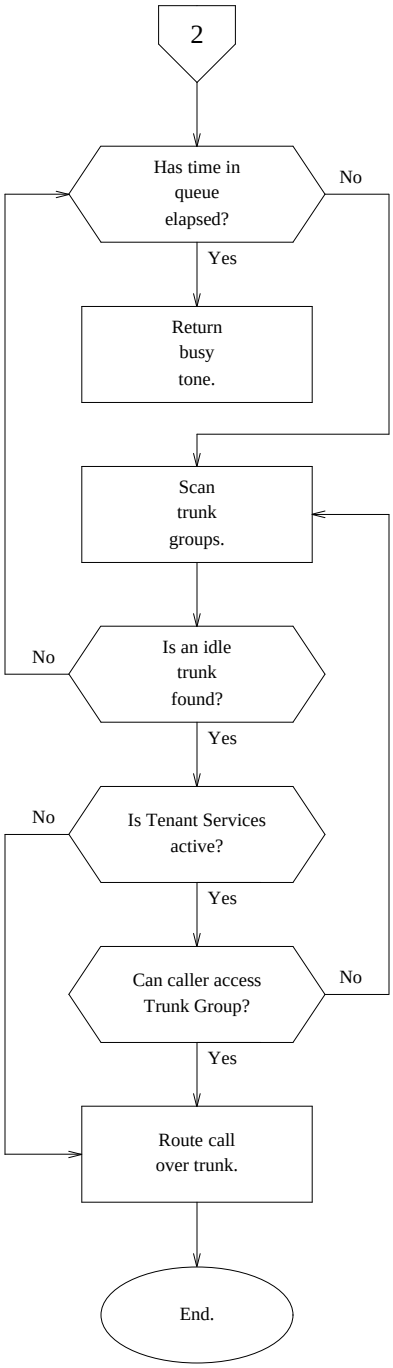

Figure 91-1. Queuing Feature Flow (Sheet 3 of 3)

CONSIDERATIONS

ETN Queuing

In general, all tandem switches within an ETN (Electronic Tandem Network) have the same type of queuing. But, combinations are possible; for example, an ETN can have both Type 3 and Type 4 queuing.

AAR/ARS Call Queuing

An AAR or ARS call can only queue on the first-choice trunk group in a routing pattern. A call cannot be placed in queue if the caller has another call on hold, and the switch does not queue IDDD (International Direct Distance Dialing) calls.

Main/Satellite/Tributary

At a main or satellite location, terminals (stations) can have either ringback or off-hook queuing. Terminals at a tributary location can only have off-hook queuing.

Ringback Queuing Restrictions

A call from a local terminal (one assigned to the switch) cannot enter a ringback queue if any of the following features or restrictions are active:

- Attendant Control of Terminal Access
- Manual Terminating Line Service
- Automatic Callback
- Termination Restriction.

When the switch attempts to ringback a caller waiting in queue on a 2-way trunk group, it reserves a trunk for the ringback call. However, there is a chance the reserved trunk may be seized from the far end (before the switch at the near end makes the ringback call), leaving no trunks for the ringback call. If this happens, the call is requeued at the head of the queue. To prevent this, a 2-way trunk group can be assigned a ringback restriction so that ringback queuing is not allowed, or ringback queuing is changed to off-hook queuing.

Tie Trunk Queuing

- Type 1 Queuing (Off-Hook)

  Type 1 queuing should only be assigned at the tandem end of an access tie trunk. This reduces the blocking rate for calls from other tandem switches, but increases blocking for calls from subtending Main/Satellite locations. With Type 1 queuing, calls can queue at more than one switch before completion.

- Type 2 Queuing (Ringback/Priority Off-Hook)

  When a call from a subtending (satellite/tributary) location enters a ringback queue at the main, the main has to seize a tie trunk to ringback the subtending location. If all the tie trunks are busy, the call moves to the bottom of the queue. Because this may cause blocking, Type 2 queuing is only recommended for 1-way outgoing trunks at the Main. Furthermore, a Main/Tributary complex cannot use this type of queuing unless the complex has a coordinated numbering plan. With Type 2 queuing, calls that tandem through the network can only enter a queue once.

- Type 3 Queuing (Off-Hook/Priority Off-Hook)

  Type 3 Queuing can be assigned to both ends of a 2-way intertandem tie trunk group. However, as with Type 1 queuing, blocking increases for calls from subtending locations.

Hard and Soft Processor Swaps

Outgoing trunk queues are stored in a status portion of switch memory. Therefore, if a call is queued to a trunk group when a hard processor swap occurs, the call is never routed outside the System 85. The queue is cleared.

INTERACTIONS WITH OTHER FEATURES

The following System 85 features affect or are affected by the operation of this feature.

Attendant Call Waiting

The callback sequence associated with ringback queuing is delayed until there are no waiting calls.

Automatic Alternate Routing

An incoming tie trunk that infers AAR routing cannot have ringback queuing.

Automatic Callback

The Automatic Callback feature and ringback queuing, at the local switch, cannot be activated at the same time by a terminal.

Activation of the Automatic Callback feature towards a terminal line that has Queuing activated is allowed, but deferred, until either the Queuing process is resolved or the administered Queuing interval times out.

Automatic Route Selection

An incoming tie trunk that infers ARS routing cannot have ringback queuing.

Call Coverage

A *Queuing Callback Call* is treated as a priority call and does not route to coverage. These callbacks ring at the terminal that originally placed the call. Callback calls do not cover, even if coverage is in effect.

Call Pickup

A terminal user cannot pickup a local queuing callback. Busy tone is heard.

A callback from a tandem switch looks like an incoming tie trunk call and can be picked up. Also, a callback call between a main and subtending switch appears as a normal tie trunk call and can be picked up.

Call Waiting

The callback sequence associated with queuing at the local switch is delayed until there are no calls waiting on the terminal. If a callback attempt is made from a tandem switch to a subtending switch, the call appears as an ordinary incoming tie trunk call to the subtending switch. Consequently, if the calling party has call waiting assigned and is busy on another call, the callback attempt notifies the called party. If the callback attempt is answered, the call can be completed while the third party waits on hold. If the called party ignores the tone, the attempt is treated as ‘‘don’t answer attempt.’’

Data Communications Access

The Queuing feature is compatible with the DCA (Data Communications Access) feature. Queuing can provide a waiting list for DCA trunk groups when these data resources are busy. Then, as resources become available, the first user in queue is served.

A DCA trunk group can be directly accessed using a data terminal. For data-terminal access, off-hook queuing is the only type of queuing that can be used. With off-hook queuing, the data terminal user receives a RINGING prompt until a circuit becomes available.

A DCA trunk group can also be indirectly accessed using a voice terminal and then transferring the call to an associated data terminal. For voice-terminal access followed by transfer to a data terminal, either off-hook or on-hook queuing can be used. For off-hook queuing, the switch returns the music, announcement, or silence. But, for on-hook queuing, the calling party receives confirmation tone and then goes on-hook to wait for the queuing callback.

To allow data terminals to directly access and voice terminals to indirectly access the same DCA trunk group, off-hook queuing must be assigned the DCA trunk group.

If the calling party hears reorder tone, the queue might be full. The user should go on-hook and try again.

Hold

A voice terminal user can be placed in a ringback queue while holding another call. Queuing allows a voice terminal user to dial a busy outgoing trunk group, be automatically placed in a queue and called back when a trunk is available. If queuing is activated and the calling voice terminal has a call on hold, going on-hook returns the held call first (Hold takes precedence over queuing callback). After the calling voice terminal user goes on-hook and the dialed trunk group is idle, the calling voice terminal is rung back.

Host Computer Access

The Queuing feature provides a waiting list when all resources are busy. As resources become available, the first user in queue is served. Queuing can be used with Host Computer Access. Voice terminal users can be provided with on-hook or off-hook queuing. Data terminal users can be provided off-hook queuing. If every Host Computer Access port is busy, users dialing the Host Computer Access access code receive confirmation tone (on-hook queuing), music-on-hold, a recorded announcement, or silence (off-hook queuing). If reorder tone is received, it may be an indication that the queue is full. It might also mean the switch is in heavy use. The user should go on-hook and try again.

Hunting

When the local switch attempts a queuing callback, the callback call does not hunt.

ISN (Information Systems Network) Interface

System 85 endpoints can use queuing if all ISN Interface trunk circuits are busy, and the queue is not full. Voice terminal users can be provided with on-hook (if administered) or off-hook queuing. Data terminal users can use off-hook queuing only. Queuing is not provided by ISN. That is, when a call from the System 85 side has passed the ISN Interface point and is under ISN control, Queuing is no longer available. Also, queuing is not available to ISN station users until after the call has passed the interface point.

ISDN (Integrated Services Digital Network)/PRI (Primary Rate Interface)

The Queuing feature works a little differently for certain ISDN calls. Ordinarily, a call will queue (if necessary) on the first-choice trunk group in the appropriate AAR or ARS pattern. For ISDN calls, if the COS (Class-of-Service) indicates ISDN facilities only, the call will queue on the first **ISDN trunk group** with the needed bearer capability in the pattern (see discussion under AAR/ARS interaction). This may not be in the first-choice trunk group.

Last Number Dialed

The Queuing feature handles external calls placed with Last Number Dialed feature in the same way that calls placed with manually dialed digits are handled.

Main/Satellite

When a Main/Satellite complex serves as an access arrangement for an ETN, the tandem switch and the main switch can both have ringback queuing. However, a single queue (located at the tandem) serves both switches. If the tandem switch attempts to ringback a local terminal user (no tie trunk involved), the switch ignores certain features. These features are:

- Call Forwarding—Follow Me
- Call Forwarding—Busy and Don’t Answer
- Call Pickup
- Call Waiting
- Call Coverage
- Hunting.

When a tandem or main routes a ringback call to a subtending location by way of a tie trunk, the preceding features work normally. The reason is that the subtending switch sees the call as an ordinary incoming tie trunk call.

Modem Pooling

When a data call is queued, the modem pool conversion resource is held waiting along with the queued call.

Override

Override is denied when the called extension is in an off-hook queue waiting for an idle trunk.

Precedence Calling

Queuing (except attendant queue) is denied on a Precedence Calling call. Precedence calls that cannot preempt the needed facility are directed to the attendant rather than being placed in a facility queue.

Priority Calling

The callback sequence associated with queuing is delayed until there are no waiting calls.

Remote Access

Remote access calls cannot use ringback (on-hook) queuing. The serving CO drops the connection when the Remote Access caller goes on-hook. The System 85 switch has no way to call back to the off-net number (within the public network).

Restriction—Attendant Control of Voice Terminals

A call cannot be placed in a ringback queue at the local switch if a terminating restriction is in effect for the calling terminal. However, the call can be placed in a ringback queue at a tandem switch. When the callback attempt is made from a tandem switch, the call appears as an incoming tie trunk call. The original calling party will not receive the callback attempt.

Restriction—Voice Terminal Restrictions

A call from a terminal with Termination or Manual Terminating Line restriction is in effect cannot be placed in a ringback queue. This is true for both local (same switch) calls and for calls placed between switches (e.g., in a Main/Satellite or Tandem Network arrangement).

Ringing—Distinctive Ringing

Three-burst distinctive ringing only applies to voice terminals assigned to a local switch. When the switch routes a ringback call to a subtending location over a tie trunk, 1-burst ringing is provided by the subtending switch.

Route Advance

When the Queuing feature is assigned with Route Advance and every trunk group in the Route Advance list is busy, the call queues on the designated trunk group. The switch then periodically scans the trunk group for an available trunk. If a trunk is not available in the first-choice trunk group, the switch checks the alternate trunk groups for an available trunk. Should the first-choice trunk group not be assigned to the queuing list, the call is not placed in queue. Rather, the switch returns reorder tone (fast busy tone) to the calling party.

ARS (Automatic Route Selection): If the ARS feature is also provided and if the ARS queuing trunk group is the same as the Route Advance queuing trunk group, ARS calls served from the queue can access the Route Advance list.

Tenant Services

The Queuing feature is not affected by partitioning. If queuing is administered for an outgoing trunk group and every trunk in the group is busy, then a call (that is otherwise allowed to use the trunk group) can queue on the trunk group. If queuing is not administered for the trunk group and every trunk in the group is busy, the switch will return reorder tone to the calling party.

HARDWARE REQUIREMENTS

Off-hook queuing with music requires one auxiliary trunk circuit (SN231) per module, even if the customer does not provide an audio source. If the customer does provide an audio source, a voice coupler circuit (36A or 89A) and transformer (2012D) are required.

FEATURE ADMINISTRATION

Assignment of the Queuing feature is on a per-trunk group basis. The customer can partially administer this feature using the SMT (System Management Terminal) or FM (Facilities Management) feature. This feature can also be administered using CSM (Centralized System Management).

The following are the applicable MAAP and SMT procedures.

MAAP AND SMT PROCEDURES — QUEUING			
PROCEDURE	**WORD**	**PURPOSE**	**SMT**
100	1	Assigns a trunk dial access code and trunk type to a trunk group.	No
101	—	Administers the characteristics of trunks assigned to a trunk group.	No
150	—	Associates a trunk group with an equipment location for the audio circuit for off-hook queuing with music.	No
275	1	Assigns features to the system class of service including music-on-hold for off-hook queuing.	Yes
330	1 & 2	Administers switch and trunk group queuing parameters including: priority and nonpriority queue lengths, time-in-queue-limits for ringback and off-hook queues, threshold and raised FRL values for AAR and ARS calls, and ringback queue restrictions.	Yes
350	1	Assigns the first digit of the access code for the Queuing feature (if required).	No
350	2	Assign the feature dial access code. The applicable encode is as follows: 9 Cancel Ringback Queuing.	No

The following are the applicable FM procedures used with the AP 16.

FM SCREENS — QUEUING	
PATH NAME	**PURPOSE**
facilities-mgmt system-parameters queuing	Turns on and off queuing for a switch. This screen is also used to display the threshold FRL, raised FRL, the queuing type for local voice terminals, and the preference depth (R2 V3).
facilities-mgmt trunk-groups queuing	Turns queuing on and off for a trunk group and changes queuing attributes associated with a trunk group including time-in-queue limits and queue length (priority and nonpriority). A printed report can also be generated.

The following are the applicable CSM Command Paths utilizing the **admin** area of TCM or FM.

CSM SCREENS — MASKS QUEUING		
APPL'N	**OBJECT**	**PURPOSE**
FM	trk-grp	Assigns a trunk dial access code and trunk type to a trunk group. Administers the characteristics of trunks assigned to a trunk group, and associates a trunk group with an equipment location for the audio circuit for off-hook queuing with music.
TCM/FM	sys-cos	Assigns features to the system class of service including music-on-hold for off-hook queuing.
FM	sys-queue	Activates/deactivates queuing on a switch, and changes or displays queuing information. (System 85 R2 V3) If queuing is active, one or more ARS pattern preferences for queuing must be specified. Thus, any number of preferences can be used to enable queuing on a system-wide basis.
FM	trk-grp-queue	Assigns queuing and trunk group queuing thresholds to a trunk group. (System 85 R1 V3 through R2 V2) Trunk groups used in an ARS pattern can have queuing only on the first preference in a pattern.
TCM/FM	first-digit	Administers the first digit of the dial access code for the Queuing feature (if required).
TCM/FM	dial-access-code	This command adds, changes, and/or removes the DAC associated with the Queuing feature. (The applicable encode to cancel Ringback Queuing is 9).

RADIO PAGING ACCESS

DESCRIPTION

This feature allows users to page a person over a radio receiver. The paged party must be carrying a radio receiver that is set to the radio paging system. The paged party can answer the page by using a voice terminal and dialing an answer-back channel. Remote Access trunk users can also use this feature.

Radio Paging Access is useful for persons who do not normally remain at one location or who cannot remain out of reach for even short periods of time. Possible users of this feature include medical, managerial, or emergency personnel, or anyone requiring a personal paging service.

Feature History and Development

This feature was first available on System 85 in Release 1. There have been no changes to this feature since Release 1.

USER OPERATIONS

The following are the user operating procedures for this feature.

To Page Multiple Parties

With an alerting tone from a voice terminal:

- Go off-hook or press an idle appearance button. [Dial tone]
- Dial the radio paging access code. [Ringback tone is heard, and the paging equipment automatically becomes available. The paging tone is generated over the radio receiver when ringback tone ends.]
- If answer-back is desired, stay off-hook.
- If answer-back is not desired, go on-hook. [Paging equipment is released.]

With an alerting tone from an attendant without a DTGS button:

- Press a loop button. [ATND lamp lights.]
- Press START. (If there is a source party, the SPLIT lamp lights, and the source party is split from the connection.) [Dial tone]
- Dial the radio paging access code. [Ringback tone is heard, the ANS lamp lights, and the paging equipment automatically becomes available. The paging tone is generated over the radio receiver when ringback tone ends.]

- If answer-back is desired, stay off-hook.
- If answer-back is not desired, press RELEASE. [Paging equipment is released.]

With an alerting tone from an attendant with a DTGS button:

- Press a loop button. [ATND lamp lights.]
- Press the Direct Trunk Group Selection (DTGS) button. (If there is a source party, the SPLIT lamp lights, and the source party is split from the connection.) [Ringback tone is heard, and the paging equipment automatically becomes available. The paging tone is generated over the radio receiver when ringback tone ends.]
- If answer-back is desired, stay off-hook.
- If answer-back is not desired, press RELEASE. [Paging equipment is released.]

With voice announcements from a voice terminal:

- Go off-hook or press an idle appearance button. [Dial tone]
- Dial the radio paging access code. [Ringback tone is heard. Paging equipment automatically becomes available when ringback tone ends.]
- When ringback tone ends, make the announcement. (Announcement is heard over the radio receiver.)
- If answer-back is desired, stay off-hook.
- If answer-back is not desired, go on-hook. [Paging equipment is released.]

With voice announcements from an attendant without a DTGS button:

- Press a loop button. [ATND lamp lights.]
- Press START. (If there is a source party, the SPLIT lamp lights, and the source party is split from the connection.) [Dial tone]
- Dial the radio paging access code. [Ringback tone is heard, and the ANS lamp lights. Paging equipment automatically becomes available when ringback tone ends.]
- When ringback tone ends, make the announcement. (Announcement is heard over the radio receiver.)
- If answer-back is desired, stay off-hook.
- If answer-back is not desired, press RELEASE. [Paging equipment is released.]

With voice announcements from an attendant with a DTGS button:

- Press a loop button. [ATND lamp lights.]
- Press the DTGS button. (If there is a source party, the SPLIT lamp lights, and the source party is split from the connection.) [Ringback tone is returned. Paging equipment automatically becomes available when ringback tone ends.]

- When ringback tone ends, make the announcement. (Announcement is heard over the radio receiver.)
- If answer-back is desired, stay off-hook.
- If answer-back is not desired, press RELEASE. [Paging equipment is released.]

To Page an Individual Party

With an alerting tone from a voice terminal:

- Go off-hook or press an idle appearance button. [Dial tone]
- Dial the radio paging access code. [Second dial tone is heard.]
- Dial the individual page number. [Ringback tone is heard, and the paging equipment automatically becomes available. The paging tone is generated over the radio receiver when ringback tone ends.]
- If answer-back is wanted, wait off-hook.
- If answer-back is not wanted, go on-hook. [Paging equipment is released.]

With an alerting tone from an attendant without a DTGS button:

- Press a loop button. [ATND lamp lights.]
- Press START. (If there is a source party, the SPLIT lamp lights, and the source party is split from the connection.) [Dial tone]
- Dial the radio paging access code. [Second dial tone, ANS lamp lights.]
- Dial the individual page number. [Ringback tone is heard, and the paging equipment automatically becomes available. The paging tone is generated over the radio receiver when ringback tone ends.]
- If answer-back is wanted, wait off-hook.
- If answer-back is not wanted, press RELEASE. [Paging equipment is released.]

With an alerting tone from an attendant with a DTGS button:

- Press a loop button. [ATND lamp lights.]
- Press the DTGS button. (If there is a source party, SPLIT lamp lights, and the source party is split from the connection.) [Dial tone is returned, ANS lamp lights.]
- Dial the individual page number. [Ringback tone is heard, and the paging equipment automatically becomes available. The paging tone is generated over the radio receiver when ringback tone ends.]
- If answer-back is wanted, wait off-hook.
- If answer-back is not wanted, press RELEASE. [Paging equipment is released.]

With a voice announcement from a voice terminal:

- Go off-hook or press an idle appearance button. [Dial tone]
- Dial the radio paging access code. [Second dial tone]
- Dial the individual page number. [Ringback tone is heard. Paging equipment automatically becomes available when ringback tone ends.]
- When ringback tone ends, make the announcement. (Announcement is heard over the radio receiver.)
- If answer-back is wanted, wait off-hook.
- If answer-back is not wanted, go on-hook. [Paging equipment is released.]

With a voice announcement from an attendant without a DTGS button:

- Press a loop button. [ATND lamp lights.]
- Press START. (If there is a source party, the SPLIT lamp lights, and the source party is split from the connection.) [Dial tone]
- Dial the radio paging access code. [Second dial tone is heard, and ANS lamp lights.]
- Dial the individual page number. [Ringback tone is heard. Paging equipment automatically becomes available when ringback tone ends.]
- When ringback tone ends, make the announcement. (Announcement is heard over the radio receiver.)
- If answer-back is wanted, wait off-hook.
- If answer-back is not wanted, press RELEASE. [Paging equipment is released.]

With a voice announcement from an attendant with a DTGS button:

- Press a loop button. [ATND lamp lights.]
- Press the DTGS button. (If there is a source party, the SPLIT lamp lights, and the source party is split from the connection.) [Second dial tone is heard, and ANS lamp lights.]
- Dial the individual page number. [Ringback tone is heard. Paging equipment automatically becomes available when ringback tone ends.]
- When ringback tone ends, make the announcement. (Announcement is heard over the radio receiver.)
- If answer-back is wanted, wait off-hook.
- If answer-back is not wanted, press RELEASE. [Paging equipment is released.]

To Answer a Page:

- Go off-hook. [Dial tone]
- Dial the answer-back access code. [Ringback tone]
- Paged party is connected to the paging party. [Paging equipment is released.]

CONSIDERATIONS

Busy Tone

Busy tone is returned if the paged party calls the paging party and the paging party has gone on-hook and then off-hook. Busy tone is also returned if both paging trunks are busy or if the primary trunk is in the process of paging.

Reorder Tone

Reorder tone is returned if all paging circuits are busy.

Outside (Off-Premises) Calls

Callers on outside trunks (except Remote Access) cannot page over the radio paging system. However, an attendant or a voice terminal user can page the party for them.

Touch-Tone Dialing Required

Radio Paging Access calls must be made from terminals with a touch-tone telephone dial to access the paging equipment.

Single Circuit Access Limit

When one paging circuit is busy, either on a page or waiting for answer-back, the other paging circuit cannot be accessed. The switch returns busy tone in this situation. The second paging circuit can be accessed as soon as the first paging circuit connects to an answer-back channel.

INTERACTIONS WITH OTHER FEATURES

None.

RESTRICTING FEATURE USE

The following features can restrict access to the Radio Paging Access feature.

- Attendant Control of Trunk Group Access
- Attendant Control of Terminal Access
- Voice Terminal Restriction.

HARDWARE REQUIREMENTS

The Radio Paging Access feature requires the following additional or special hardware.

- A J58824CD interface circuit
- A J59204CA G1-type touch-tone receiver
- A 36A voice coupler
- A 2012D power transformer to supply power to the voice coupler
- An SN230 circuit pack for two complete paging channels
- Customer-provided radio transmitting and receiving equipment
- An SN253 auxiliary tone plant to generate tones for the customer-provided equipment.

FEATURE ADMINISTRATION

Assignment of the Radio Paging Access feature is on a per-system basis. The customer can partially administer this feature using the SMT (System Management Terminal) or the TCM (Terminal Change Management) feature. This feature can also be administered using CSM (Centralized System Management).

The following are the applicable MAAP and SMT procedures.

MAAP AND SMT PROCEDURES — RADIO PAGING ACCESS			
PROCEDURE	**WORD**	**PURPOSE**	**SMT**
000	1	Assigns the voice terminal class of service to an extension number.	Yes
010	3	Assigns a Miscellaneous Trunk Restrictions group to a voice terminal class of service.	Yes
100	1	Assigns the trunk type and dial access code for a Radio Paging Access trunk group.	No
101	—	Administers the characteristics for the trunk groups administered in Procedure 100, Word 1.	No
102	—	Assigns the radio paging and answer-back trunk groups (using dial access codes) to Miscellaneous Trunk Restriction groups.	Yes
150	—	Assigns the SN230 equipment location for each radio paging and answer-back trunk to the trunk groups assigned in Procedure 100, Word 1.	No
202	1	Administers the desired trunk group selection buttons on the attendant console(s).	No
350	1	Assigns the first digit of the trunk group dial access code (if required).	No

The following are the applicable TCM path names used with the AP 16.

TCM SCREENS — RADIO PAGING ACCESS	
PATH NAME	**PURPOSE**
terminal-change class-of-service attributes	Assigns a Miscellaneous Trunk Restrictions group to a voice terminal class of service.
terminal-change extensions attributes	Assigns the class of service to an extension number.

The following are the applicable CSM Command Paths utilizing the **admin** area of TCM or FM.

CSM SCREENS — MASKS RADIO PAGING ACCESS		
APPL'N	**OBJECT**	**PURPOSE**
TCM	extension	Assigns the voice terminal class of service to an extension number.
TCM	class-of-service	Assigns a Miscellaneous Trunk Restrictions group to a voice terminal class of service.
FM	trk-grp	Assigns the trunk type and dial access code for a Radio Paging Access trunk group. Administers the characteristics for the Radio Paging Access trunk groups and assigns the equipment location for each radio paging and answer-back trunk.
FM	misc-trk-rst-grp	Assigns the radio paging and answer-back trunk groups (using dial access codes) to Miscellaneous Trunk Restriction groups.
TCM	direct-trk-grp-keys	Administers the desired trunk group selection buttons on the attendant console(s).
TCM/FM	first-digit	Assigns the first digit of the trunk-group dial access code (if required).

RECALL SIGNALING

DESCRIPTION

This feature allows a single-appearance voice terminal user who is busy on a 2-party call to place the second party on hold and obtain recall dial tone. The voice terminal user can then call another party or activate a feature.

> **NOTE:** This feature does not apply to multiappearance voice terminals. Multiappearance voice terminal users can use the Conference, Hold, or Transfer features to achieve the same results. See the Glossary for a description of the RECALL button functions on different types of voice terminals.

Feature History and Development

This feature was first available on System 85 in Release 1. It has not changed since its introduction.

USER OPERATIONS

The following are the user operating procedures for this feature.

To Place the Second Party on Hold and Obtain Recall Dial Tone

For terminals without a RECALL button:

- Momentarily press the switchhook. [Recall dial tone]

  (Connected party placed on soft hold.)

For terminals with a RECALL button:

- Press RECALL. [Recall dial tone]

  (Connected party placed on soft hold.)

CONSIDERATIONS

This feature cannot be used when the second party to the connection is an attendant console position.

INTERACTIONS WITH OTHER FEATURES

Remote Access

This feature can be used when a Remote Access user is the second party on the connection. However, the Remote Access user cannot use this feature.

HARDWARE REQUIREMENTS

None.

FEATURE ADMINISTRATION

The Recall Signaling feature is always provided on a per-system basis. Assignment is not required.

RECORDED TELEPHONE DICTATION ACCESS

DESCRIPTION

This feature permits voice terminal users within the switch and at remote locations to access customer-provided dictation equipment. The following functions are provided:

- Start function (voice or dial activated)
- Stop function (voice or dial activated)
- Playback (dial activated)
- Corrections (dial activated).

Easy access to dictation equipment enhances and simplifies the customer's dictation services. Thus, the feature reduces secretarial requirements and facilitates word processing.

Feature History and Development

This feature was first available on System 85 in Release 1. There have been no changes to this feature since Release 1.

USER OPERATIONS

The following are the user operating procedures for this feature.

To Access a Recorded Telephone Dictation Trunk:

- Go off-hook. [Dial tone]
- Dial the recorded telephone dictation trunk access code. [Second dial tone or 1400-hertz ready tone]

To Start Operation of the Dictation Equipment:

- Speak into the voice terminal handset (for voice-activated systems).
- Dial the digit 1 (if the dictation equipment is dial controlled).

To Stop the Recording Process:

- Stop speaking (for a voice-activated system). The absence of speech stops the recording process.
- Dial the digit 1 again (for a dial-activated system).

Options are available to allow the user to control other aspects of the dictation process. These options include:

To Initiate Playback:

- Dial the digit 3.

To Cancel Playback:

- Dial the digit 1.

To Indicate a Correction:

- Dial the digit 2.

To Access the Dictation Attendant:

- Dial the digit 0.

  Whenever the digits 5 through 9 or the characters * and # are dialed, the user is routed to the dictation attendant to indicate a dialing error.

To End the Dictation Session:

- Dial the digit 4.

CONSIDERATIONS

Denied Access

Attendants and tie trunk users cannot access a telephone dictation trunk.

INTERACTIONS WITH OTHER FEATURES

The following System 85 features affect or are affected by the operation of this feature.

Attendant Control of Trunk Group Access

If Attendant Control of Trunk Group Access is active on a recorded telephone dictation trunk group when the switch is in the preselected call routing mode of operation, any attempt to access a recorded telephone dictation trunk in the restricted trunk group results in intercept tone.

Attendant Call Waiting

The Attendant Call Waiting feature is denied toward an extension with the Recorded Telephone Dictation feature activated.

Automatic Alternate Routing

Automatic Alternate Routing cannot be used in conjunction with the Recorded Telephone Dictation Access feature.

Automatic Route Selection

Automatic Route Selection cannot be used in conjunction with the Recorded Telephone Dictation Access feature.

Call Waiting

A call is not allowed to wait on a terminal that has activated Recorded Telephone Dictation Access.

Conference—Three Party

The Conference—Three Party feature cannot be used in conjunction with the Recorded Telephone Dictation feature. Any attempt to access a recorded telephone dictation trunk from a 2-party connection is denied.

Off-Premises Terminal

Recorded telephone dictation access trunks are not available to trunk port off-premises terminals.

Priority Calling

Priority Calling is denied when Recorded Telephone Dictation Access is active at the called terminal.

Tenant Services

The trunk group for the Recorded Telephone Dictation Access feature is not partitioned. By default, the provided trunks are equally accessible to voice terminal users in any extension partition.

Voice terminal access to the Recorded Telephone Dictation Access feature can be limited in the voice terminal class of service. This is done by assigning a Miscellaneous Trunk Restrictions group containing the dictation trunk group to a voice terminal class of service in Procedure 010, Word 3.

RESTRICTING FEATURE USE

The following features can restrict the Recorded Telephone Dictation Access feature.

- Attendant Control of Trunk Group Access
- Attendant Control of Voice Terminals
- Miscellaneous Trunk Restrictions.

HARDWARE REQUIREMENTS

The Recorded Telephone Dictation Access feature requires the following additional or special hardware.

- Each dictation trunk requires one circuit of an SN231 circuit pack (four circuits per SN231).
- An SN253 auxiliary tone plant to provide tones to the voice terminals.
- A frequency generator unit (J58889N, L1).
- A frequency interrupter unit (J58889N, L2).
- A recorded telephone dictation unit (J58827E, L1 and L2).
- A 36A voice coupler.
- A 2012D power transformer to supply power to the voice coupler.

If the switch uses touch-tone dialing and external touch-tone dialing conversion, the following hardware is also required.

- A recorded telephone dictation touch-tone dialing translation unit (J58827E, L1, L2, and L7)
- Touch-tone calling receivers (J99289C, L1, C, SA, or J59204CA, L1).

FEATURE ADMINISTRATION

Assignment of the Recorded Telephone Dictation Access feature is on a per-trunk group basis. Terminal access to a Recorded Telephone Dictation trunk is assigned on a per-terminal class-of-service basis. The customer can partially administer this feature using the SMT (System Management Terminal) or the TCM (Terminal Change Management) feature. This feature can also be administered using CSM (Centralized System Management).

The following are the applicable MAAP and SMT procedures.

MAAP AND SMT PROCEDURES — RECORDED TELEPHONE DICTATION ACCESS

PROCEDURE	WORD	PURPOSE	SMT
000	1	Assigns the voice terminal class of service to an extension number.	Yes
010	3	Assigns a Miscellaneous Trunk Restrictions group to a terminal class of service.	Yes
100	2	Administer the trunk group and a dial access code for Recorded Telephone Dictation.	No
102	—	Assigns the trunk group (using dial access code) to Miscellaneous Trunk Restriction groups.	Yes
150	—	Assigns the SN231 equipment location to the trunk-group number administered in Procedure 100, Word 1.	No
350	1	Assigns the first digit of the trunk dial access codes (if required).	No

The following are the applicable TCM path names used with the AP 16.

TCM SCREENS — RECORDED TELEPHONE DICTATION ACCESS

PATH NAME	PURPOSE
terminal-change class-of-service attributes	Assigns a Miscellaneous Trunk Restrictions group to a voice terminal class of service.
terminal-change extensions attributes	Assigns the class of service to an extension number.

The following are the applicable CSM Command Paths utilizing the **admin** area of TCM or FM.

CSM SCREENS — MASKS RECORDED TELEPHONE DICTATION ACCESS		
APPL'N	**OBJECT**	**PURPOSE**
TCM	extension	Assigns the voice terminal class of service to an extension number.
TCM	class-of-service	Assigns a Miscellaneous Trunk Restriction group to a terminal class of service.
FM	trk-grp	Administers the trunk group and a dial access code for Recorded Telephone Dictation and assigns the equipment location to the trunk group number.
FM	misc-trk-rst-grp	Assigns the trunk group (using the dial access code) to Miscellaneous Trunk Restriction groups.
TCM/FM	first-digit	Assigns the first digit of the trunk dial access code (if required).

REMOTE ACCESS

DESCRIPTION

The Remote Access feature allows external touch-tone dialing users to access the System 85 switch through the public network, and then use many features and services of the switch as though they were System 85 station users.

Remote Access service can be provided using local CO (Central Office), FX (Foreign Exchange), or WATS (800 Service) facilities. For Release 2, Version 3 and 4 switches, special access facilities such as MEGACOM* service can also be used. In Version 3, only DS1 facilities can be used for Remote Access MEGACOM service.

Basic Access Options

This feature can be administered to provide direct dialed access to remote access trunks. Remote Access can also be ‘‘shared’’ with LDN (Listed Directory Number) service.

- If direct dialed access is provided, an incoming remote access call receives System 85 dial tone, and the user can proceed to dial the rest of the call without attendant assistance.
- If access is ‘‘shared’’ with LDN service, a Remote Access call is routed to the attendant, and the attendant must extend the call like any other LDN call under normal operations. If Unattended Console Service is active, the ‘‘shared’’ LDN service becomes inactive, and Remote Access calls are handled on a direct dialed access basis.

  In effect, with ‘‘shared’’ LDN service, the Remote Access feature is turned off while the attendant is on duty. Remote access trunks function just like LDN trunks.

A Time-Out to Attendant option is also available for Remote Access calls. With this option active, the caller can maintain control by dialing (dialing the barrier or authorization code and then dialing an extension number, trunk access code, or feature access code) within 10 seconds after receiving switch dial tone. Otherwise, the call is automatically routed to an attendant or to the Unattended Console Service terminal. This option allows the Remote Access user with a rotary dial terminal to receive attendant assistance. Rotary dial terminals cannot be used with remote access in a direct dialing mode.

---

* Registered servicemark of AT&T.

Security Measures Available

The LDN ‘‘shared’’ service option provides a degree of security for Remote Access during normal operations (attendant on duty) by allowing the attendant to screen remote access calls before extending them. Additional security measures include the use of a Barrier Code or the Authorization Code feature. Remote Access users can be required to dial a Barrier (security) Code or an Authorization Code after being connected to a remote access trunk.

Barrier Codes: Barrier Codes are 4-digit codes assigned system wide (one code for all users). These codes are assigned by the attendant and should be changed frequently to maintain their security value.

Authorization Codes: Authorization Codes can be from four to seven digits and are assigned to individual users. There can be up to 90,000 separate authorization codes assigned in a System 85, Release 2, Version 3 (9,000 in earlier System 85s).

If a Barrier Code is used to control use of the Remote Access feature itself, then the Authorization Code feature can be used separately for control of other switch features and facilities (i.e., with the Facilities Restriction Level feature for access control to selected trunk facilities). If the Authorization Code is used for control of Remote Access, the same authorization code is ‘‘remembered’’ by the switch and used if needed later in the call.

Feature History and Development

The Remote Access feature was first available on System 85 with Release 1.

For Release 2, Version 4, the switch capacity for Remote Access trunks is increased from 45 to 6000. This increased capacity is provided to meet the needs of partitioned switches (Tenant Services feature). However, the full capacity of 6000 is also available to switches that are not partitioned.

Also for Release 2, Version 4, the Remote Access feature was enhanced to allow the use of special access facilities such as MEGACOM service.

USER OPERATIONS

The following are the user operating procedures for this feature.

To Use Remote Access From an External Location

Without ''Shared'' LDN Service:

- Dial the 7- or 10-digit Remote Access number. [Ringback tone followed by second dial tone]
- If an Authorization or Barrier Code is required*, dial the appropriate code followed by the desired extension number or access code.
- If an Authorization or Barrier Code is not required, dial the desired extension number or access code.

With ''Shared'' LDN Service:

- Dial the 7- or 10-digit Remote Access number. [Ringback tone] (Call routes directly to attendant.)
- Ask the attendant to extend the call as desired.

To Change the Barrier Code From the Attendant Console:

- Press an idle loop button.
- Press START. [Dial tone]
- Dial the change barrier code access code. [Second dial tone]
- Enter the new 4-digit barrier code. [Confirmation tone]
- Press RELEASE. (New barrier code is in effect.)

CONSIDERATIONS

Security

The Remote Access feature is a powerful tool that could easily be abused. For that reason, it is important that it be protected from unauthorized use. Specific measures can be taken to limit feature access to authorized users. These include the following:

- Shared LDN Service:

  This technique routes all Remote Access calls to the attendant for screening before being extended. This action is discontinued when Unattended Console Service is in effect.

- Barrier Code:

  A Barrier Code can be required for direct dialed remote access calls. A remote access caller who does not know the current barrier code would be denied service (intercept tone) or routed to attendant intercept. The barrier code can be changed by the attendant and should be changed

* If the switch returns recall dial tone, an Authorization Code is needed to complete the call.

frequently to maintain its security value. When ‘‘Shared’’ LDN service is in effect, the Barrier Code is not required before the call is routed to the attendant.

- Authorization Codes:

  The Authorization Code feature can be used instead of a Barrier Code, or it can be used to supplement the protection provided by a Barrier Code. The latter option is recommended. It provides the flexibility of immediate attendant action (changing the Barrier Code) when a breach of security is detected. When both a Barrier Code and Authorization Code are used, a low FRL is assigned to remote access trunks. Further access to facilities you want to control, such as WATS, FX, or private network trunks, can be controlled using the Authorization Code feature.

Automatic Callback and Ringback Queuing

Automatic Callback and Ringback Queuing require a call back to the caller. Both of these capabilities are denied to the Remote Access caller because the switch has no way of identifying the calling (outside) number. Off-hook queuing, if administered, can be used by Remote Access callers.

Switchhook Flashing

Any feature that requires signaling the switch with a switchhook flash (for example, Conference—Three Party, Hold, and Transfer) or equivalent (button) cannot be used via Remote Access. The user is not able to send a switchhook flash signal over the trunk connection.

Loudspeaker Paging Access

The Remote Access and the Loudspeaker Paging Access features cannot be assigned to the same trunk group.

Touch-Tone Dialing Requirement

A Remote Access user must use a voice terminal equipped for touch-tone dialing if a barrier code or authorization code is required by the switch. A rotary dial user cannot enter a barrier code or authorization code. A call placed from a rotary dialing terminal, in a switch requiring a barrier or authorization code, can only be completed with attendant assistance.

INTERACTIONS WITH OTHER FEATURES

The following System 85 features affect or are affected by the operation of this feature.

Abbreviated Dialing

When the Abbreviated Dialing feature is administered to allow ‘‘Global’’ access to the System List, this includes Remote Access users on Release 2, Version 3 and 4 switches.

Automatic Callback

A remote access user cannot use the Automatic Callback feature. The switch has no way of placing a callback call to an off-net number.

Conference—Three Party

A Remote Access user can be a member of a 3-party conference but cannot establish the conference. To be a member of a 3-party conference, the remote access user first calls a local station user, and then that local station user must establish the conference by adding the third party. Otherwise, there is no way for a remote access user to send the necessary signals to the switch.

Conference—Attendant Six Party

A remote access user cannot be a member of an attendant established 6-party conference except as the requesting conferee (first party connected to the conference circuit). This is because the attendant has no way of dialing the simulated line appearance of the remote access trunk. Even if this were possible, once seized by a remote access user, the appearance would be busy to any incoming call.

CSMDR (Centralized Message Detail Recording)

Call records can include Remote Access calls. If an authorization code is used during a Remote Access call, that code is recorded. However, if a barrier code is used, the barrier code is not recorded.

Display—Voice Terminal

The voice terminal display for a Remote Access call is ‘‘OUTSIDE CALL.’’ This display appears even if a different name is assigned to the trunk group in Procedure 012.

Foreign Exchange Access

The FX Access feature is fully compatible with the Remote Access feature. That is, based on restrictions applied, incoming FX Access calls can use the Remote Access feature and Remote Access calls to the switch can use outgoing FX Access trunks.

Hold

An incoming remote access call can be placed on hold; however, the remote access user cannot use the Hold feature.

ISDN (Integrated Services Digital Network)/PRI (Primary Rate Interface)

The Remote Access feature should work normally with ISDN through the **interworking** function. The accessibility of ISDN facilities from a remote access trunk will depend on the COS assigned to the line appearance of that trunk.

Last Number Dialed

The Last Number Dialed feature does not store and redial the digits dialed during a Remote Access call.

Multiple Listed Directory Number

When the switch is in the day mode and Remote Access has shared service with LDN, users dialing the remote access number are routed to the attendant. The calls are then extended by the attendant rather than using the remote access feature.

Precedence Calling

Remote Access can be used in conjunction with the Precedence Calling feature if precedence calling is administered to class-of-service 31.

Queuing

Remote access calls cannot use ringback (on-hook) queuing. If ringback queuing were allowed, the serving CO would drop the connection when the Remote Access caller went on-hook. Then, the System 85 switch would have no way to call back to this off-net number (within the public network).

Recall Signaling

This feature can be used when a Remote Access user is the second party on the connection. However, the Remote Access user cannot use the Recall Signaling feature.

Restriction—Voice Terminal Restrictions

The Remote Access user cannot complete a call to a switch terminal if any of the following features are active on the terminal line:

— Terminal-to-Terminal Only Calling

— Termination Restriction.

SMDR (Station Message Detail Recording)

See the CSMDR interaction.

Transfer

A remote access call can be transferred by a regular System 85 station user. However, the remote access caller cannot use the Transfer feature.

Trunk Verification—Voice Terminal

Remote Access trunks (trunk type 50) can be ‘‘maintenance busied’’ or ‘‘unbusied’’ via the Trunk Verification—Voice Terminal feature. However, a Remote Access user cannot use the Trunk Verification—Voice Terminal feature.

Variable Format Call Detail Recording

If a Remote Access call terminates in the switch or tandems through the switch, the call record stores the attendant ID number (DAC), if assigned, for the remote access group. The user can dial a CDR account code after the remote access code. Remote access to the network may require a dialed barrier code or an authorization code, and the call record stores a dialed authorization code. If a station receives a call on an incoming trunk and then transfers the call, the station user who received the call will be recorded as the dialed number.

WATS Access

The Remote Access feature can be used to provide access to the WATS feature, and Remote Access services can be provided to incoming calls on 800 Service trunks.

RESTRICTING FEATURE USE

Remote Access feature. Barrier codes or authorization codes can be used for switch security and must be dialed immediately after obtaining switch dial tone.

The Restrictions—Voice Terminal Restriction feature can be used to apply class-of-service restrictions to the ‘‘simulated line appearance’’ of the Remote Access trunk.

The Miscellaneous Trunk Restriction feature can be used to restrict Remote Access trunks.

HARDWARE REQUIREMENTS

The Remote Access feature requires the following additional or special hardware.

- SN230 Central Office Trunk Circuit Pack, four circuits each.
- LORAIN variable voice switched gain amplifier (optional)

  This amplifier compensates for undesirable transmission conditions (i.e., too much gain, not enough gain) that may interfere with Remote Access calls.
- Polarity guard

  The polarity guard is necessary for any originating remote telephone on which the polarity is reversed when the call is answered (e.g., telephones served by step-by-step Central Offices and dial-tone-first coin telephones). The polarity guard allows the calling party to use touch-tone dialing which is necessary for the Remote Access feature.

FEATURE ADMINISTRATION

Assignment of the Remote Access feature is on a per-trunk group basis. The customer can partially administer this feature using the SMT (System Management Terminal), the TCM (Terminal Change Management), or CSM (Centralized System Management).

The following are the applicable MAAP and SMT procedures.

MAAP AND SMT PROCEDURES — REMOTE ACCESS			
PROCEDURE	**WORD**	**PURPOSE**	**SMT**
010	1	Assigns the characteristics of class-of-service 31 for Remote Access.	Yes
010	3	Assigns the desired restrictions to class-of-service 31.	Yes
100	1	Assigns the trunk dial access codes and trunk type for a Remote Access trunk group.	No
101	—	Administers the characteristics for the trunk groups administered in Procedure 100, Word 1.	No
102	—	Assigns the trunk groups (using dial access code) to Miscellaneous Trunk Restriction groups.	Yes
103	—	Assigns Authorization Code requirements for incoming trunks (Field 6). Also assigns echo-suppression trunk signaling in Field 11 as follows: 0 = Normal Dial Tone 1 = Precursor Tone / Dial Tone 2 = Abbreviated Dial Tone / Dial Tone.	Yes
150	—	Assigns the SN230 equipment location to the trunk group number. The trunk is also designated as Remote Access in this procedure.	No
275	2	Administers shared use of Remote Access trunks.	Yes
285	—	Field 1 specifies the type of Remote Access security for the switch. 0 = barrier code not required 1 = barrier code required 2 = authorization code required.	Yes
286	1	Assigns Remote Access to the attendant.	Yes
350	1	Assigns the first digit of the feature dial access code and the Remote Access trunk-group dial access codes (if required).	No
350	2	Assigns the dial access code allowing an attendant to change the barrier code. The applicable encode is: 26 Remote Access - change barrier code.	No

The following is the applicable TCM path name used with the AP 16.

TCM SCREEN — REMOTE ACCESS	
PATH NAME	**PURPOSE**
terminal-change system parameters (select the Access-Codes option)	Assigns the Remote Access barrier code to the system class of service.

The following are the applicable CSM Command Paths utilizing the **admin** area of TCM or FM.

CSM SCREENS — MASKS REMOTE ACCESS		
APPL'N	**OBJECT**	**PURPOSE**
TCM	class-of-service	Assigns the characteristics and the desired restrictions for class-of-service 31 for Remote Access.
FM	trk-grp	Assigns the trunk dial access codes and trunk type for a Remote Access trunk group. Administers the trunk-group characteristics, assigns Authorization Code requirements for incoming trunks, and assigns echo suppression trunk signaling. Assigns DS1 channels (trunks) to remote access and associates an internal line number, and assigns the equipment location to the trunk-group number.
FM	misc-trk-rst-grp	Assigns the trunk groups (using dial access code) to Miscellaneous Trunk Restriction groups.
TCM/FM	sys-cos	Administers shared use of Remote Access trunks, specifies the barrier code arrangement for the system and assigns Remote Access to the attendant.
TCM/FM	first-digit	Assigns the first digit of the Remote Access trunk dial access codes (if required).
TCM/FM	dial-access-code	Assigns the dial access code allowing an attendant to change the barrier code.

RESTRICTION—ATTENDANT CONTROL OF VOICE TERMINALS

DESCRIPTION

This feature allows an attendant to activate or cancel restrictions for specific extension numbers or groups of extension numbers. The switch returns Intercept Treatment when a call restricted by this feature is attempted.

Applications

This feature is useful as a means of placing temporary restrictions on voice terminals. Some possible applications of this feature include:

Unauthorized Call Control

It can be used to control terminals that might be used by unauthorized personnel.

Hotel—Motel Services

In the hotel environment, a guest, who wishes not to be disturbed, can request use of the Controlled Termination Restriction. Also, should a hotel guest decline the use of toll access or direct outward dialing, the attendant can restrict the voice terminal from placing outgoing calls.

Hospital Services Management

In the hospital environment, a doctor may request limited telephone access for a patient so that the patient can remain quiet.

Six Available Restrictions

An attendant can assign any of the following six restrictions to one extension number or to a predetermined group of extension numbers:

1. Controlled Outward Restriction

   Voice terminal users cannot make outgoing calls but can still call a local attendant (using a dial access code), a local attendant (or an attendant in the DCS network) using an LDN, or local voice terminal user (or voice terminal users within the DCS network). The user can receive calls normally.

2. Controlled Terminal-to-Terminal Restriction

   Voice terminal users cannot receive any calls from other local voice terminal users (or users within the DCS network). However, the voice terminal user can receive attendant calls or incoming calls. Also, this restriction does not prevent users from originating calls.

3. Outward and Terminal-to-Terminal Restriction

   Voice terminal users cannot make outgoing calls or receive calls from other local voice terminal

users (or users within the DCS network). The voice terminal user can call an attendant and other local voice terminal users (or users within the DCS network). Also, the user can receive incoming outside calls.

4. Controlled Total Restriction

   Voice terminal users cannot receive or make any calls on that extension number.

5. Controlled Termination Restriction

   Voice terminal users cannot receive any calls. Call origination is not affected.

6. Outward and Termination Restriction

   Voice terminal users cannot make outgoing calls or receive any calls. However, the user can call a local attendant (or an attendant in the DCS network) or other local voice terminal users (or users within the DCS network).

Feature History and Development

This feature was first available on System 85 in Release 1. There have been no changes to the feature since Release 1.

USER OPERATIONS

The following are the user operating procedures for this feature.

To Activate an Attendant Controlled Restriction

For a single extension number:

- Press an idle loop button. [PA lamp goes out.]
- Press START. [Dial tone]
- Dial the access code for a single extension number. [Silence]
- Dial the 1-digit code for the desired restriction. [Second dial tone]
- Dial the extension number to be restricted. [Confirmation tone]
- Press RELEASE. [PA lamp lights.]

For a predesignated group of extension numbers:

- Press an idle loop button. [PA lamp goes out.]

- Press START. [Dial tone]
- Dial the access code for a group of extensions. [Silence]
- Dial the 1-digit code for the restriction to be applied. [Second dial tone]
- Dial the 2-digit group number (e.g., ‘‘03’’). [Confirmation tone]
- Press RELEASE. [PA lamp lights.]

To Deactivate an Attendant Controlled Restriction

For a single extension number:

- Press an idle loop button. [PA lamp goes out.]
- Press START. [Dial tone]
- Dial the access code for a single extension. [Silence]
- Dial 0. [Second dial tone]
- Dial the extension number that is to be unrestricted. [Confirmation tone]
- Press RELEASE. [PA lamp lights.]

For a group of extension numbers:

- Press an idle loop button. [PA lamp goes out.]
- Press START. [Dial tone]
- Dial the access code for a group of extensions. [Silence]
- Dial 0. [Second dial tone]
- Dial the 2-digit group number (e.g., ‘‘04’’). [Confirmation tone]
- Press RELEASE. [PA lamp lights.]

CONSIDERATIONS

Restriction Groups

An attendant can control a total of 63 restriction groups.

Any number of extension numbers can be assigned to a restriction group. However, an individual extension number can be assigned to only one group.

Multiappearance Extensions

If an attendant activates a restriction toward an extension number with multiple appearances, the restriction applies to every appearance of the extension number.

Hard Processor Swaps

Attendant controlled restrictions are stored in a translation portion of switch memory. Therefore, if an attendant activates a controlled restriction and then a hard processor swap occurs, the restriction will endure the hard swap.

INTERACTIONS WITH OTHER FEATURES

The following System 85 features affect or are affected by the operation of this feature.

ACD (Automatic Call Distribution)

When Controlled Termination Restriction is applied to the individual extension of an ACD (or EUCD) agent, direct calls to the agent do not terminate at the agent's terminal. However, calls to the ACD (or EUCD) split terminate normally at the agent's position.

Automatic Callback

If any of the Attendant Control of Voice Terminals restrictions are activated on either the calling or called lines after the Automatic Callback call origination (but prior to the start of the call completion sequence), the switch ignores the restrictions.

Automatic Route Selection

Terminal lines with Controlled Outward Restriction or Controlled Total Restriction applied cannot access Automatic Route Selection.

Bridged Call

The Attendant Control of Voice Terminals feature allows an attendant to apply a restriction to an extension or a predefined group of extensions. When one of these restrictions is applied to a *shared extension*, the restriction applies to every image of the extension.

Call Coverage

If Controlled Termination Restriction is activated toward an extension with coverage active, the restriction overrides, and calls to that extension do not route to coverage.

Call Forwarding—Busy and Don't Answer

Call Forwarding—Busy and Don't Answer cannot be activated to forward calls to a terminal that *is already restricted* by Controlled Terminal-to-Terminal, Controlled Termination, or Controlled Total restriction. When this is attempted, the switch returns intercept tone.

If calls are *already being forwarded* to a voice terminal before an attendant activates a termination restriction against the forwarded-to terminal, these forwarded calls are allowed to terminate to the restricted terminal.

If a voice terminal has forwarding activated, and then an attendant activates a termination restriction against the forwarding terminal, calls to the forwarding terminal do not terminate or forward. The switch returns intercept tone to the calling party.

Call Forwarding—Don't Answer

Call Forwarding—Don't Answer cannot be activated to forward calls to a terminal that *is already restricted* by Controlled Terminal-to-Terminal, Controlled Termination, or Controlled Total restriction. When this is attempted the switch returns intercept tone.

If calls are *already being forwarded* to a voice terminal before an attendant activates a termination restriction against the forwarded-to terminal, these forwarded calls are allowed to terminate to the restricted terminal.

If a voice terminal has forwarding activated, and then an attendant activates a termination restriction against the forwarding terminal, calls to the forwarding terminal do not terminate or forward. The switch returns intercept tone to the calling party.

Call Forwarding—Follow Me

Call Forwarding—Follow Me cannot be activated to forward calls to a terminal that *is already restricted* by Controlled Terminal-to-Terminal, Controlled Termination, or Controlled Total restriction. When this is attempted the switch returns intercept tone.

If calls are *already being forwarded* to a voice terminal before an attendant activates a termination restriction against the forwarded-to terminal, these forwarded calls are allowed to terminate to the restricted terminal.

If a voice terminal has forwarding activated, and then an attendant activates a termination restriction against the forwarding terminal, calls to the forwarding terminal do not terminate or forward. The switch returns intercept tone to the calling party.

Call Pickup

A voice terminal that is otherwise restricted from receiving calls (by the Controlled Terminal-to-Terminal, Outward and Terminal-to-Terminal, Controlled Termination, or Outward and Termination Restriction) is allowed to pickup group members' calls using Call Pickup.

Call Vectoring

An attendant is not allowed to activate an Attendant Control of Voice Terminals restriction against a VDN. When this is attempted, the switch returns intercept tone.

Call Waiting

If an Attendant Control of Voice Terminals restriction prevents a call from terminating at a terminal, Call Waiting is also prevented to that terminal.

Data Call Setup

Restrictions applied to a data module (i.e., for the keyboard dialing subfeature) can be bypassed through the use of the one button data call transfer procedures unless the same restrictions are applied to the activating voice terminal.

Data Communications Access

An attendant can restrict selected terminals from access to the DCA feature with the Attendant Control of Voice Terminals feature. An attempt to access a DCA port by one of these terminals is redirected to the attendant for screening. These attendant-extended calls are denied Data Protection.

Data Protection

Data Protection—Temporary is not available on attendant-extended calls. If the voice terminal extension is denied direct access to the trunk by the activation of this feature, Data Protection—Temporary cannot be used. Data Protection—Permanent can be provided, however.

DDC (Direct Department Calling)

If any Attendant Control of Voice Terminals restriction (Outward, Terminal-to-Terminal Only Calling, Termination, or Total) is assigned to a DDC controlling terminal or a DDC group extension, then the restriction assigned is applied to the entire group.

Direct Inward Dialing

Through the use of the Attendant Control of Voice Terminals feature, Direct Inward Dialing can be denied as a means of access to terminals that ordinarily can be reached by this method.

Direct Outward Dialing

Through the use of the Attendant Control of Voice Terminals feature, Direct Outward Dialing can be denied to terminals which ordinarily have this capability.

DCS (Distributed Communications System)

From a voice terminal user's perspective, the Attendant Control of Voice Terminals feature is transparent in the DCS environment. For example, whenever a restricted voice terminal is allowed to place calls to or receive calls from a local voice terminal, calls can also be placed to or received from voice terminals residing in other DCS nodes.

From an attendant's perspective, the Attendant Control of Voice Terminals feature is not transparent in the DCS environment. An attendant residing in the same node as the voice terminal must activate and deactivate these restrictions. If an attendant tries to activate a restriction against a voice terminal in a different node, the switch returns intercept treatment.

EUCD (Enhanced Uniform Call Distribution)

Same as ACD (Automatic Call Distribution) interactions.

Host Computer Access

An attendant can restrict selected terminals from access to the Host Computer Access trunk groups with the Attendant Control of Voice Terminals feature. An attempt to access a Host Computer Access port from a restricted terminal is redirected to an attendant. If the attendant is to screen these calls, a voice terminal equipped with transfer capabilities must be provided near the attendant console to perform the transfer. The transfer cannot be performed from the attendant console.

Hunting

When a call is placed directly to a restricted voice terminal in a hunt group, the switch returns Intercept Treatment to the calling party. The call does not hunt.

However, when a call is placed to an unrestricted terminal in a hunt group, the call can hunt to and/or through the restricted terminal.

Override

The use of Override toward a terminal with Controlled Termination restriction active is denied.

Personal Central Office Line

Personal Central Office Line calls are not affected when an attendant activates a restriction toward an extension on a voice terminal.

Precedence Calling

Attendant Control of Voice Terminals functions normally for Precedence Calling calls. Calls to or from a restricted voice terminal route to the attendant priority queue for processing.

Priority Calling

If an attendant restricts call termination to a voice terminal, Priority Calling is also restricted to that terminal.

Queuing

A call cannot be placed in a ringback queue at the local switch if a terminating restriction is in effect for the calling terminal. However, the call can be placed in a ringback queue at a tandem switch. When the callback attempt is made from a tandem switch to a subtending switch, the call appears as an ordinary incoming tie trunk call to the subtending switch. Consequently, the calling party will not receive the callback attempt.

Restriction—Voice Terminal Restrictions

Administered restrictions applied to voice terminals using the Voice Terminal Restrictions feature are checked by System 85 software before attendant-activated restrictions using the Attendant Control of Voice Terminals feature. However, the administered restrictions are not applied in preference to the attendant-activated restrictions. Instead, the restraints applied to a user's calling privileges *can accumulate* as additional restrictions are either activated by an attendant or assigned by the switch administrator. As an example, if Origination Restriction were assigned to a voice terminal by the switch administrator and an attendant activated Controlled Termination Restriction toward the same terminal, calls could not be placed or received at the terminal.

Straightforward Outward Completion

Controlled Outward Restriction can be bypassed using the Straightforward Outward Completion feature.

Tenant Services

In general practice, the Attendant Control of Voice Terminals feature allows an attendant to activate and cancel temporary restrictions for a specific voice terminal or a predefined group of voice terminals. The Tenant Services feature limits the operation of this feature.

An attendant (in a partition other than Attendant Partition 0) is allowed to activate or cancel restrictions for specific extensions. However, this operation is only allowed when the extension resides in an extension partition that is assigned to the attendant's partition. If the attendant tries to activate or cancel a restriction for an extension in any other partition, the switch returns intercept treatment to the attendant.

An attendant (in a partition other than Attendant Partition 0) is also allowed to activate or cancel restrictions for controlled restriction groups. However, this operation is only allowed when the controlled restriction group has been assigned to the attendant's partition in Procedure 270, Word 2. If the attendant tries to activate or cancel a restriction for any other controlled restriction group, the switch returns intercept treatment to the attendant.

An attendant in Attendant Partition 0 is allowed to activate and cancel restrictions for any extension or any controlled restriction group in the switch.

It is the responsibility of the system manager to assign extensions to controlled restriction groups. However, there are no tests in Procedure 000, Word 2 to ensure partitioning of the 63 groups. It is strongly recommended that every member of each group belong to the same extension partition.

Through Dialing

Controlled Outward Restriction can be bypassed using the Through Dialing feature.

UCD (Uniform Call Distribution)

If any Attendant Control of Voice Terminals restriction (Outward, Terminal-to-Terminal Only Calling, Termination, or Total) is assigned to a UCD controlling terminal or a UCD group extension, then the restriction assigned is applied to the entire group.

HARDWARE REQUIREMENTS

None.

FEATURE ADMINISTRATION

Assignment of the Attendant Control of Voice Terminals feature is on a per-system basis. The customer can partially administer this feature using the SMT (System Management Terminal) or the TCM (Terminal Change Management) feature. This feature can also be administered using CSM (Centralized System Management).

The following are the applicable MAAP and SMT procedures.

MAAP AND SMT PROCEDURES
RESTRICTION—ATTENDANT CONTROL OF VOICE TERMINALS

PROCEDURE	WORD	PURPOSE	SMT
000	2	Assigns a controlled restriction group number (from 1 to 63) to an extension number.	Yes
075	1	Displays the voice terminals assigned to a controlled restriction group.	Yes
204	1	Administers the desired alphanumeric display for restricted calls.	No
350	1	Assigns the first digit of the feature dial access codes.	No
350	2	Assigns the feature dial access codes. The applicable encodes are as follows: 27 Single extension control 28 Group of extension control.	No

The following are the applicable TCM path names used with the AP 16.

TCM SCREENS
RESTRICTION—ATTENDANT CONTROL OF VOICE TERMINALS

PATH NAME	PURPOSE
terminal-change group restriction	Views or prints a report of the controlled restriction groups.
terminal-change extensions attributes	Assigns a controlled restriction group number to an extension number.

The following are the applicable CSM Command Paths utilizing the **admin** area of TCM or FM.

CSM SCREENS — MASKS RESTRICTION — ATTENDANT CONTROL OF VOICE TERMINALS		
APPL'N	**OBJECT**	**PURPOSE**
TCM	extension	Assigns a controlled restriction group number to an extension number.
TCM	console-messages	Administers the desired alphanumeric display for restricted calls.
TCM/FM	first-digit	Assigns the first digit of the feature dial access codes.
TCM/FM	dial-access-code	Administers the feature dial access codes (if required).

RESTRICTION—CODE RESTRICTION

DESCRIPTION

This feature allows restriction of calls by selected extension numbers to areas defined by specific area codes and/or office codes. The feature designates the 3-digit area codes, 3-digit office codes, and 6-digit combinations of area codes and office codes that a restricted voice terminal user is allowed to access. The switch returns intercept tone whenever the caller dials a code that is not allowed to the caller.

Each of the 63 terminal classes of service is assigned a code restriction level of 1, 2, 3, or 0. Likewise, each selected code is assigned a level of 1, 2, 3, or 0. The level ‘‘1’’ is the most restricted, and the level ‘‘0’’ is the least restricted. For example, a voice terminal user with an extension number assigned as level 2 can access any code with a restriction level of 1 or 2. An extension number assigned as level 0 can access any of the specified codes.

The following table shows the code restriction levels that are allowed.

Table 97-1. Allowable Code Restriction Levels

Voice Terminal	**Area Code or Area Code and Office Code**			
	1	**2**	**3**	**0**
1	x			
2	x	x		
3	x	x	x	
0	x	x	x	x

Feature History and Development

This feature was first available on System 85 in Release 1. There have been no changes to this feature since Release 1.

USER OPERATIONS

None.

CONSIDERATIONS

Number of Allowable Codes for Trunk Groups

Calls to the public network are made using CO (Central Office) or FX (Foreign Exchange) trunk groups. Code Restriction may limit access to area and/or office codes on as many as five CO trunk groups and on as many as four FX trunk groups. There is one list of allowed codes that serves the CO trunk groups; whereas, each FX trunk group is served by a separate list of allowed codes.

Code Restriction Parameters

For CO trunk groups, calls can be allowed to a maximum of 1000 codes. This 1000-code (or less) list can have as many as:

- 160 area codes
- 800 office codes for the home area
- 40 six-digit combinations of area codes and office codes.

FX Trunk Groups

For FX trunk groups, calls can be independently allowed to a maximum of 40 codes. This 40-code (or less) list can be any assortment of area codes, office codes, and combinations of area codes and office codes.

Code and Toll Restriction Together

The same trunk group cannot use Code Restriction and Toll Restriction together.

Tie Trunks

The Code Restriction feature cannot be assigned to tie trunks.

Attendant Position

Attendant positions are not code restricted. Therefore, voice terminal users can access restricted codes with attendant assistance.

Hard Processor Swaps

Code restriction assignments are stored in a translation portion of switch memory. Therefore, these restrictions will endure a hard processor swap.

INTERACTIONS WITH OTHER FEATURES

The following System 85 features affect or are affected by the operation of this feature.

Automatic Route Selection

Code Restriction does not apply to calls placed through Automatic Route Selection. If Code Restriction and Automatic Route Selection are to be provided in the same switch, Miscellaneous Trunk Restriction is recommended for the Automatic Route Selection trunk groups to prevent dial access to these trunk groups by those terminals only assigned Code Restriction.

Bridged Call

A Code Restriction level is assigned to a class of service in Procedure 010, Word 3. The class of service is then assigned to an extension in Procedure 000, Word 1. When a Code Restriction level is assigned to a *shared extension*, the level applies to every image of the extension.

Call Vectoring

The Code Restriction feature does not limit the routing of ‘‘route to’’ steps to destinations outside the switch. ‘‘Route to’’ steps utilize AAR/ARS software to route these calls, and Code Restriction checks are not made by the AAR/ARS software.

Restriction—Toll Restriction

Code Restriction and Toll Restriction cannot be used together on the same line class of service.

Route Advance

Route Advance routes outgoing calls over alternate facilities when the first-choice trunk group is busy. When a CO trunk group is assigned to the CO (primary) code restriction list, any associated route advance CO trunk groups with the same restrictions need not be assigned to individual code restriction lists. They default to the same restrictions as the CO trunk group assigned to the CO code restriction list. However, if a CO trunk group is assigned to an FX (secondary) code restriction list and is in a route advance sequence, every CO trunk group in the sequence must be assigned to a separate code restriction list and given the same allowed codes. If any of the CO trunk groups in the sequence are not assigned to an FX code restriction list, they default to the CO (primary) list.

Straightforward Outward Completion

Straightforward Outward Completion bypasses Code Restriction.

Through Dialing

Through Dialing bypasses Code Restriction.

HARDWARE REQUIREMENTS

None.

FEATURE ADMINISTRATION

Assignment of the Code Restriction feature is on a per-line class-of-service and per-trunk group basis. The customer can administer this feature using the SMT (System Management Terminal) or the TCM (Terminal Change Management) feature. This feature can also be administered using CSM (Centralized System Management).

The following are the applicable MAAP and SMT procedures.

MAAP AND SMT PROCEDURES — RESTRICTION—CODE RESTRICTION			
PROCEDURE	**WORD**	**PURPOSE**	**SMT**
000	1	Assigns the voice terminal class of service to an extension number.	Yes
010	3	Assigns a Code Restriction level (1, 2, 3, or 0) to a terminal class of service.	Yes
301	1	Administers a Code Restriction trunk group and trunk type.	Yes
301	2	Administers CO digit absorption by a trunk group.	Yes
301	3	Assigns a Code Restriction level (1, 2, 3, or 0) to a 3-digit office or area code.	Yes
302	—	Assigns allowed 6-digit strings of area codes and office codes to a trunk group.	Yes

The following are the applicable TCM path names used with the AP 16.

TCM SCREENS — RESTRICTION—CODE RESTRICTION	
PATH NAME	**PURPOSE**
terminal-change class-of-service attributes	Assigns a Code Restriction level (1, 2, 3, or 0) to a voice terminal class of service.
terminal-change extensions attributes	Assigns the class of service to an extension number.

The following are the applicable CSM Command Paths utilizing the **admin** area of TCM or FM.

CSM SCREENS — MASKS RESTRICTION — CODE RESTRICTION		
APPL'N	**OBJECT**	**PURPOSE**
TCM	extension	Assigns the voice terminal class of service to an extension number.
TCM	class-of-service	Assigns a Code Restriction level (1, 2, 3, or 0) to a terminal class of service.
FM	code-rst-level	Associates a CO trunk group with a primary and/ or a secondary code restriction group, and administers digit treatment for trunks terminating at a digit-absorbing step-by-step CO.
FM	allowed-codes	Associates a Trunk Group, NPA, NNX, or NPA-NNX 6-digit combination with a code restriction level. The code restriction levels control the use of CO and FX trunks. A code restriction level is associated with a line class of service, and a line class of service is assigned to an extension.

RESTRICTION—MISCELLANEOUS TRUNK RESTRICTIONS

DESCRIPTION

This feature restricts preselected (by class-of-service) voice terminals from the use of certain trunk groups [i.e., WATS (Wide Area Telecommunications Service)]. A voice terminal user who is restricted from and tries to access the trunk group receives intercept tone. The switch administrator determines the trunks to be restricted. Each switch is individually tailored to meet the customer's need.

Restriction Groups

A maximum of eight restriction groups can be provided, with each group containing one to four trunk groups. Any number of the eight restriction groups can be assigned to each of the 63 line classes of service.

Feature History and Development

This feature was first available on System 85 in Release 1. There have been no changes to this feature since Release 1.

USER OPERATIONS

None.

CONSIDERATIONS

Hard Processor Swaps

Miscellaneous trunk restrictions are stored in a translation portion of switch memory. Therefore, these restrictions will endure a hard processor swap.

INTERACTIONS WITH OTHER FEATURES

The following System 85 features affect or are affected by the operation of this feature.

Automatic Route Selection

The Miscellaneous Trunk Restriction feature denies preselected lines access to preselected trunk groups. When Miscellaneous Trunk Restriction and Automatic Route Selection are both assigned, Miscellaneous Trunk Restriction does not apply to a call using Automatic Route Selection for routing.

Bridged Call

Miscellaneous Trunk Restrictions are assigned to a class of service in Procedure 010, Word 3. The class of service is then assigned to an extension in Procedure 000, Word 1. When these restrictions are assigned to a *shared extension*, the restrictions apply to every image of the extension.

Conference—Three Party

A terminal restricted from accessing a trunk group due to the Miscellaneous Trunk Restrictions feature can be added to a conference via Conference—Three Party involving the restricted trunk group. However, the restricted terminal cannot originate a conference via Conference—Three Party involving the restricted trunk group.

Data Communications Access

Local voice terminal lines may be restricted from accessing a DCA trunk group by the Miscellaneous Trunk Restriction feature.

Host Computer Access

Local voice terminal lines may be restricted from accessing a Host Computer Access trunk by the Miscellaneous Trunk Restriction feature.

Precedence Calling

The Miscellaneous Trunk Restrictions feature does not restrict access to Precedence Capable trunk groups within the AUTOVON Access star configuration. However, when trunk-group dial access codes are used to access ROUTINE Only trunk groups, this access can be limited by Miscellaneous Trunk Restrictions.

Straightforward Outward Completion

If an attendant determines that the terminal should be able to complete the call, the Miscellaneous Trunk Restriction checks are bypassed when the attendant places the call for the voice terminal user and then releases when ringback is returned.

Tenant Services

Miscellaneous Trunk Restrictions can be assigned to a voice terminal class of service in the normal manner. However, the capacity of this feature has not been increased for use with the Tenant Services feature. There remains a capacity of four trunk groups in each of eight restriction groups. With this limited capacity, the Miscellaneous Trunk Restrictions feature is only useful for limited applications (e.g., to restrict Loudspeaker Paging or Call Park).

Through Dialing

The Through Dialing feature operates normally from the restricted terminal at an attendant's discretion. If the attendant determines that the terminal should be allowed access to the trunk, the Miscellaneous Trunk Restriction checks are bypassed when the attendant seizes the trunk and then releases to allow the terminal user to complete the dialing.

Transfer

The Transfer feature can transfer a restricted terminal (due to the Miscellaneous Trunk Restrictions feature) to a restricted trunk group. However, the restricted terminal cannot originate a transfer via the Transfer feature to a restricted trunk group.

HARDWARE REQUIREMENTS

None.

FEATURE ADMINISTRATION

Assignment of the Miscellaneous Trunk Restrictions feature is on a per-line class-of-service and per-trunk group basis. The customer can administer this feature using the SMT (System Management Terminal) or the TCM (Terminal Change Management) feature. This feature can also be administered using CSM (Centralized System Management).

The following are the applicable MAAP and SMT procedures.

MAAP AND SMT PROCEDURES
RESTRICTION—MISCELLANEOUS TRUNK RESTRICTIONS

PROCEDURE	WORD	PURPOSE	SMT
000	1	Assigns the voice terminal class of service to an extension number.	Yes
010	3	Assigns Miscellaneous Trunk Restriction groups to a terminal class of service.	Yes
102	—	Assigns trunk groups (using dial access codes) to Miscellaneous Trunk Restriction groups.	Yes
175	—	Displays the trunk group(s) (by dial access code) in a Miscellaneous Trunk Restriction group.	Yes

The following are the applicable TCM path names used with the AP 16.

TCM SCREENS RESTRICTION—MISCELLANEOUS TRUNK RESTRICTIONS	
PATH NAME	**PURPOSE**
terminal-change class-of-service attributes	Assigns Miscellaneous Trunk Restriction groups to a voice terminal class of service.
terminal-change extensions attributes	Assigns the class of service to an extension number.
terminal-change group trunk-restrictions	Assigns trunk groups (using dial access codes) to Miscellaneous Trunk Restriction groups.

The following are the applicable CSM Command Paths utilizing the **admin** area of TCM or FM.

CSM SCREENS — MASKS RESTRICTION — MISCELLANEOUS TRUNK RESTRICTIONS		
APPL'N	**OBJECT**	**PURPOSE**
TCM	extension	Assigns the voice terminal class of service to an extension number.
TCM	class-of-service	Assigns Miscellaneous Trunk Restriction groups to a terminal class of service.
FM	misc-trk-rst-grp	Assigns and displays trunk groups (using dial access codes) to Miscellaneous Trunk Restriction groups.

RESTRICTION—TOLL RESTRICTION

DESCRIPTION

This feature restricts callers at specified extension numbers from placing toll calls except with attendant assistance. This feature includes two types of restrictions:

- Battery Reversal—The central office sends a battery reversal signal to the System 85 when the caller dials a toll call. System 85 then examines the calling line's class of service. If the line is toll restricted, System 85 immediately releases the connection to the central office, and the caller hears intercept tone.
- 0/1 Toll Restriction—This form of toll restriction is totally controlled within System 85. Toll restricted lines connect to intercept tone if the first or second digit dialed following the trunk access code is a 0 or 1, and the first three digits are not in the free (allowed) call list.

  The free call list provides up to ten customer selected 3-digit codes [NPA (Numbering Plan Area), HNPA (Home Numbering Plan Area), and/or special service codes]. This allows access by toll restricted lines to selected area codes and/or service codes such as 411 or 911. If the code is on the free call list, the call is allowed. If not, the call is denied.

Feature History and Development

This feature was first available on System 85 in Release 1. There have been no changes to this feature since Release 1.

USER OPERATIONS

None.

CONSIDERATIONS

Both Toll Restrictions

Both types of Toll Restriction can be used in the same switch but are mutually exclusive on a per-trunk group basis.

Attendant Position

Attendant positions are not toll restricted. The attendant can extend a restricted voice terminal user (and tie-trunk user) to the toll network.

Hard Processor Swaps

Toll Restriction assignments are stored in a translation portion of switch memory. Therefore, these restrictions will endure a hard processor swap.

INTERACTIONS WITH OTHER FEATURES

The following System 85 features affect or are affected by the operation of this feature.

Bridged Call

Toll Restriction is assigned to a class of service in Procedure 010, Word 3. The class of service is then assigned to an extension in Procedure 000, Word 1. When Toll Restriction is assigned to a *shared extension*, the restriction applies to every image of the extension.

Call Vectoring

The Toll Restriction feature does not limit the routing of ‘‘route to’’ steps to destinations outside the switch. ‘‘Route to’’ steps utilize AAR/ARS software to route these calls, and Toll Restriction checks are not made by the AAR/ARS software.

Code Calling Access

Terminal lines with Toll Restriction in the line class of service may not use the number ‘‘1’’ as a first or second digit of the Code Calling Access or answer-back code.

Restriction—Code Restriction

Code Restriction and Toll Restriction cannot be used together in the same line class of service.

Straightforward Outward Completion

The Straightforward Outward Completion feature bypasses Toll Restriction.

Through Dialing

Through Dialing bypasses Toll Restriction.

RESTRICTING FEATURE USE

The Toll Restriction feature can be overridden for a terminal by an attendant.

HARDWARE REQUIREMENTS

None.

FEATURE ADMINISTRATION

Assignment of the Toll Restriction feature is on a per-line class-of-service and/or per incoming dial repeating tie trunk group basis. The customer can partially administer this feature using the SMT (System Management Terminal) or the TCM (Terminal Change Management) feature. This feature can also be administered using CSM (Centralized System Management).

The following are the applicable MAAP and SMT procedures.

MAAP AND SMT PROCEDURES
RESTRICTION—TOLL RESTRICTION

PROCEDURE	WORD	PURPOSE	SMT
000	1	Assigns the voice terminal class of service to an extension number.	Yes
010	3	Assigns Toll Restriction to a voice terminal class of service.	Yes
101	—	Assigns battery reversal to a trunk group.	No
300	—	Administers the free call list (a list of unrestricted codes) for the system.	Yes

The following are the applicable TCM path names used with the AP 16.

TCM SCREENS RESTRICTION—TOLL RESTRICTION	
PATH NAME	**PURPOSE**
terminal-change class-of-service attributes	Administers Toll Restriction to a voice terminal class of service.
terminal-change extensions attributes	Assigns the class of service to an extension number.

The following are the applicable CSM Command Paths utilizing the **admin** area of TCM or FM.

CSM SCREENS — MASKS RESTRICTION — TOLL RESTRICTION		
APPL'N	**OBJECT**	**PURPOSE**
TCM	extension	Assigns the voice terminal class of service to an extension number.
TCM	class-of-service	Administers Toll Restriction to a voice terminal class of service.
FM	trk-grp	Add, changes, displays, and removes battery reversal to a trunk group.
FM	freelist	Changes or displays the area codes, office codes (in the local area code), or service codes (such as 411, 911, and 800) that can be accessed by anyone for each switch.

RESTRICTION—VOICE TERMINAL RESTRICTIONS

DESCRIPTION

The Voice Terminal Restrictions feature provides six fixed restrictions for voice terminals to control call receiving and originating permission at the effected voice terminal. These restrictions are applied through COS (Class-of-Service) assignment.

Six Types of Restriction

Inward Restriction

Inward restrictions prevents voice terminal users at specified extension numbers from receiving non-DCS private network, public network, and attendant-extended calls. These calls will be intercepted. These voice terminal users can receive calls from within the DCS network.

Manual Terminating Line Restriction

Manual Terminating Line Restriction prevents voice terminal users at specified extension numbers from receiving calls other than direct or extended calls from a local attendant (or an attendant within the DCS network). All other calls route to the appropriate intercept. These voice terminal users can originate calls and activate features.

Origination Restriction

Origination Restriction prevents voice terminal users on specified extension numbers from originating calls. If voice terminal users attempt to make calls, their extension number is taken out of service after 10 seconds and returned to service when the user hangs up.

Outward Restriction

Outward Restriction prevents callers on specified extension numbers from directly accessing outgoing trunks to the public network. Calls can be made to other local voice terminal users (or voice terminal users within the DCS network), to a local attendant [or an attendant in the DCS network (using an LDN)], to a local attendant (using a dial access code) and to tie trunks. An attendant can assist in completing calls to outside numbers using the Straightforward Outward Completion or the Through Dialing feature.

Terminal-to-Terminal Only Calling Restriction

Terminal-to-Terminal Only Calling Restriction restricts all calls from specified extension numbers except those made to local extension numbers (or extension numbers within the DCS network). All other calls are intercepted.

Termination Restriction

Termination Restriction prevents voice terminal users on specified extension numbers from receiving calls but not from originating calls.

Feature History and Development

This feature was first available on System 85 in Release 1. There have been no changes to this feature since Release 1.

USER OPERATIONS

None.

CONSIDERATIONS

Multiappearance Extensions

If a Voice Terminal Restriction is assigned to an extension number with multiple appearances, the restriction applies to every appearance of the extension.

Dial Access Capabilities of Origination Restricted Voice Terminals

Origination restricted single-appearance voice terminal users, after answering a call, can place calls on hold and access the following features:

- Automatic Callback
- Call Pickup
- Call Waiting
- Conference—Three Party
- Hold
- Leave Word Calling
- Transfer.

Hard Processor Swaps

Voice terminal restrictions are stored in a translation portion of switch memory. Therefore, these restrictions will endure a hard processor swap.

INTERACTIONS WITH OTHER FEATURES

ACD (Automatic Call Distribution)

When Termination Restriction is applied to the individual extension number of an ACD agent, direct calls to the agent do not terminate at the agent's terminal. However, calls to the ACD split terminate normally at the agent's position.

Automatic Route Selection

Terminal lines with the following Voice Terminal Restrictions cannot access Automatic Route Selection:

- Origination Restriction
- Outward Restriction
- Terminal-to-Terminal Only Calling.

Bridged Call

Voice Terminal Restrictions are assigned to a class of service in Procedure 010, Word 3. The class of service is then assigned to an extension in Procedure 000, Word 1. When one (or more) of these restrictions is assigned to a *shared extension*, the restriction applies to every image of the extension.

Call Forwarding—Busy and Don't Answer

Incoming calls on public or private network trunks may not forward to an Inward restricted voice terminal.

Call Forwarding functions normally for an Origination restricted voice terminal when an attendant activates forwarding for the voice terminal. However, the Origination restricted voice terminal is only allowed to activate Call Forwarding from a hold or recall dial tone state. The Origination restricted voice terminal is not allowed to activate Call Forwarding from an idle state.

Calls may not be forwarded to a voice terminal with Voice Terminal Restrictions (Termination, Manual Terminating Line, or Terminal-to-Terminal Calling) assigned.

Call Forwarding—Don't Answer

Calls may not forward to a voice terminal with Restriction—Voice Terminal Restrictions (Termination, Manual Terminating Line, or Terminal-to-Terminal Calling) activated.

Incoming calls on public or private network trunks may not forward to an Inward restricted terminal.

Call Forwarding—Don't Answer functions normally for an Origination restricted voice terminal when the attendant or a single-line voice terminal user activates the Call Forwarding—Don't Answer feature from a hold or recall dial tone state. The Origination restricted terminal is not allowed to activate Call Forwarding—Don't Answer from an idle state.

If an unrestricted voice terminal is assigned as the forwarded-to voice terminal and then Restriction—Voice Terminal Restrictions (Inward, Termination, Terminal-to-Terminal Only, or Manual Terminating Line) restriction is activated in its line class of service, calls will still forward to the voice terminal.

Call Forwarding—Follow Me

Incoming calls on public or private network trunks may not forward to an Inward restricted voice terminal.

Call Forwarding functions normally for an Origination restricted voice terminal when an attendant activates forwarding for the voice terminal. However, the Origination restricted voice terminal is only allowed to activate Call Forwarding from a hold or recall dial tone state. The Origination restricted voice terminal is not allowed to activate Call Forwarding from an idle state. Therefore, if Call Forwarding—Follow Me is activated, only an attendant can deactivate it.

Calls may not be forwarded to a voice terminal with Termination, Manual Terminating Line, Inward, or Terminal-to-Terminal Only Calling Restriction assigned.

If an unrestricted voice terminal is designated as the forwarded-to voice terminal and then Voice Terminal Restrictions (Inward, Termination, Terminal-to-Terminal Only Calling, or Manual Terminating Line) restriction is assigned to its line class of service, calls still forward to the voice terminal.

Call Coverage

If Termination Restriction is assigned to an extension with coverage active, the restriction overrides, and calls to that extension do not redirect to coverage.

Call Pickup

A voice terminal with Voice Terminal Restrictions (Inward, Termination, Terminal-to-Terminal Only Calling, or Manual Terminating Line) assigned may pickup a call directed to another voice terminal in the restricted voice terminal's call pickup group.

Call Vectoring

Voice terminal restrictions that are assigned to a VDN's class of service *are not applied* to the VDN's vector processing. As an example, if Termination Restriction is assigned to Class of Service 1, and Class of Service 1 is assigned to VDN 7300, this restriction is ignored by the Call Vectoring feature. Calls are allowed to terminate to the vector.

Voice terminal restrictions do not limit the routing of ‘‘route to’’ steps to an answering destination. For example, if Origination or Outward Restriction is assigned to a VDN’s class of service, this assignment is ignored.

Call Waiting

If a Voice Terminal Restriction prevents a call from terminating at a terminal, Call Waiting is also prevented to that terminal.

Conference—Attendant Six Party

An attendant can add Inward restricted voice terminal to an attendant conference involving an incoming trunk.

Conference—Three Party

An Inward restricted voice terminal may be added to an established connection involving an incoming trunk via the Conference—Three Party feature.

An Outward restricted voice terminal can access a public network trunk if the restricted voice terminal calls an unrestricted voice terminal. From here, the unrestricted voice terminal could use the Conference—Three Party feature to connect the restricted voice terminal to the public network.

An Origination restricted voice terminal may originate a call from a 2-party connection by first accessing the Conference—Three Party feature.

Data Call Setup

Restrictions applied to a data module (i.e., for the keyboard dialing subfeature) can be bypassed through the use of the 1-button data call transfer procedures unless the same restrictions are applied to the activating voice terminal.

DCS (Distributed Communications System)

From a voice terminal user’s perspective, the Voice Terminal Restrictions feature is transparent in the DCS environment. For example, whenever a restricted voice terminal is allowed to place calls to or receive calls from a local voice terminal, calls can also be placed to or received from voice terminals residing in other DCS nodes.

EUCD (Enhanced Uniform Call Distribution)

When Termination Restriction is applied to the individual extension number of an EUCD agent, direct calls to the agent do not terminate at the agent's terminal. However, calls to the EUCD split terminate normally at the agent's position.

Hold

The user of an origination-restricted single-appearance voice terminal can place a calling party on hold. From this state, the user of restricted voice terminal can originate a call, activate a feature, or return to the held call.

When the origination-restricted user places a call on hold, the voice terminal is treated as a *fully unrestricted terminal* unless another restriction (e.g., Outward Restriction or Terminal-to-Terminal Only Calling) has also been applied to the terminal. If another restriction does apply, the origination-restricted user's dialing capabilities are limited to the capabilities allowed by the second restriction.

Hunting

When a call is placed directly to a restricted voice terminal in a hunt group, the switch returns Intercept Treatment to the calling party. The call does not hunt.

However, when a call is placed to an unrestricted voice terminal in a hunt group, the call can hunt to and/or through the restricted terminal.

Override

The use of Override toward a terminal with Termination or Manual Terminating Line Restriction active is denied.

Personal Central Office Line

Incoming calls on Personal Central Office Lines are not affected when the Voice Terminal Restrictions (Termination) feature is assigned to a line class of service.

Priority Calling

When Termination Restriction is assigned to a voice terminal, Priority Calling is denied toward that terminal.

Private Network Access

An attendant cannot extend incoming automatic tie trunk calls to an inward restricted voice terminal (intercept tone is returned to the attendant). Incoming dial repeating tie trunk calls can be completed to an Inward restricted voice terminal if the calling party dials the voice terminal number (the call is treated like a voice terminal-to-voice terminal call).

Queuing

A call from a local terminal cannot be placed in a ringback queue if Termination or Manual Terminating Line restriction is in effect at the calling terminal.

A callback attempt made between switches (e.g., in a Main/Satellite or Tandem Network arrangement) toward a voice terminal with either Termination or Manual Terminating Line restriction in effect is also denied.

Remote Access

The Remote Access user cannot complete a call to a system terminal if any of the following features are active on the terminal line:

— Terminal-to-Terminal Only Calling

— Termination Restriction.

Restriction—Attendant Control of Voice Terminals

Administered restrictions applied to voice terminals using the Voice Terminal Restrictions feature are checked by System 85 software before attendant-activated restrictions using the Attendant Control of Voice Terminals feature. However, the administered restrictions are not applied in preference to the attendant-activated restrictions. Instead, the restraints applied to a user's calling privileges *can accumulate* as additional restrictions are either activated by the attendant or assigned by the switch administrator. As an example, if Origination Restriction were assigned to a voice terminal by the switch administrator and an attendant activated Controlled Termination Restriction toward the same voice terminal, calls could not be placed or received at the terminal.

Straightforward Outward Completion

Straightforward Outward Completion bypasses Outward Restriction.

Through Dialing

Through Dialing bypasses Outward Restriction.

Transfer

The Transfer feature may be used to transfer an incoming trunk call to an Inward restricted voice terminal.

An Outward restricted voice terminal can access a public network trunk if the restricted voice terminal calls an unrestricted voice terminal. The unrestricted voice terminal uses the Transfer feature to connect the restricted voice terminal to the public network trunk.

The Origination restricted voice terminal may originate a call from a 2-party connection by first accessing the Transfer feature.

A voice terminal with the Terminal-to-Terminal Only Calling restriction assigned can be transferred to the attendant by another voice terminal user via the Transfer feature. A Terminal-to-Terminal Only Calling restricted voice terminal may transfer a call to another voice terminal but not to the attendant.

Unattended Console Service—Call Answer From Any Voice Terminal

Dialing the Call Answer From Any Voice Terminal access code is denied from an Inward restricted terminal, Terminal-to-Terminal Only Calling terminal, or Origination restricted terminal.

Unattended Console Service—Preselected Call Routing

The Preselected Call Routing feature takes precedence over the Voice Terminal Restrictions (Inward, Termination, Terminal-to-Terminal Only Calling, and Manual Terminating Line) feature. Therefore, incoming trunk calls are allowed to terminate on the preselected voice terminal, and the preselected terminal is allowed to initiate outgoing trunk calls with these restrictions active. This is the only facet of the restrictions that is overridden. For example, all calls, besides incoming trunk calls, are denied unless the calls are attendant completed for manual terminating line restricted voice terminals.

HARDWARE REQUIREMENTS

None.

FEATURE ADMINISTRATION

Assignment of the Voice Terminal Restriction feature is on a per-line class-of-service basis. The customer can administer this feature using the SMT (System Management Terminal) or the TCM (Terminal Change Management) feature. This feature can also be administered using CSM (Centralized System Management).

The following are the applicable MAAP and SMT procedures.

MAAP AND SMT PROCEDURES
RESTRICTION—VOICE TERMINAL RESTRICTIONS

PROCEDURE	WORD	PURPOSE	SMT
000	1	Assigns the voice terminal class of service to an extension number.	Yes
010	3	Assigns the type of Voice Terminal Restriction to a terminal class of service (Fields 15 through 20).	Yes

The following are the applicable TCM path names used with the AP 16.

TCM SCREENS
RESTRICTION—VOICE TERMINAL RESTRICTIONS

PATH NAME	PURPOSE
terminal-change class-of-service attributes	Assigns the type of Voice Terminal Restriction to a voice terminal class of service.
terminal-change extensions attributes	Assigns the class of service to an extension number.

The following are the applicable CSM Command Paths utilizing the **admin** area of TCM or FM.

CSM SCREENS — MASKS
RESTRICTION — VOICE TERMINAL RESTRICTIONS

APPL'N	OBJECT	PURPOSE
TCM	extension	Assigns the voice terminal class of service to an extension number.
TCM	class-of-service	Administers the type of voice terminal restriction to a terminal class of service.

RINGING — ABBREVIATED AND DELAYED

DESCRIPTION

The Ringing — Abbreviated and Delayed feature provides voice terminal users with manual transfer or delayed automatic transfer of ringing. The ringing can be directed to any subset of the voice terminals sharing an appearance with the primary terminal(s).

Automatic Transfer

With automatic transfer of ringing, the primary terminal(s) rings for a predetermined number of cycles (2, 4, 8, or 16 rings). After the ringing cycle, ringing transfers to the preassigned voice terminal(s) sharing the appearance with the primary voice terminal.

Manual Transfer

With manual transfer of ringing, the currently ringing call can be transferred to the secondary voice terminal(s). Manual transfer is done by pressing the ABRV RING button.

Prior to the transfer, the other voice terminal(s) does not ring.

Table 101-1. Ringing Characteristics by Type

Ringing Type (Encode)	Before Transfer	After Transfer
No Ringing (0)	Voice terminal doesn't ring.	Voice terminal doesn't ring.
Ringing (1)	Voice terminal rings.	Voice terminal rings.
Delayed Ringing (2)	Voice terminal doesn't ring.	Voice terminal rings.
Abbreviated Ringing (3)	Voice terminal rings.	Voice terminal doesn't ring.

Feature History and Development

This feature was first available for System 85 with Release 1. With previous releases, single-appearance voice terminals were not allowed to participate in Abbreviated and Delayed Ringing relationships. However, beginning with the R2 V2, Issue 1.2 software package, one single-appearance terminal (administered as a straight line set) can participate in each of these relationships.

USER OPERATIONS

The following is the user operating procedure for this feature.

To Manually Transfer Ringing at a Primary Terminal to a Secondary Terminal:

- Be sure the primary terminal is ringing.
- Press ABRV RING.

CONSIDERATIONS

Automatic and Manual Ringing Transfer

An appearance of the primary extension may have both automatic and manual transfer of ringing. This combination is obtained by administering automatic transfer of ringing in Procedure 052, Word 2, Field 3 and administering the ABRV RING button in Procedure 054, Word 1.

Straight Line Sets

Manual transfer of ringing, requiring an ABRV RING button, cannot be assigned to a straight line set.

Abbreviated Ringing Without Delayed Ringing

Abbreviated Ringing can also be assigned to *unshared* appearances. When this is done, the unshared appearance rings for the specified number of ringing cycles (2, 4, 8, or 16) and then the ringing stops while the green status lamp continues flashing.

As an example, a multiappearance voice terminal has three unshared appearances. Ringing is assigned to the first appearance, while Abbreviated Ringing (set for two ringing cycles) is assigned to the second and third appearances. In this way, when the user of this voice terminal is active on the first appearance, a subsequent call that terminates to the second or third appearance will only ring twice. Silencing this ringing after two ringing cycles limits the audible disturbance to the active call until the second call is either redirected to coverage, answered by the called party, or abandoned by the calling party.

NOTE: The called party can also press the Send All Calls button to hasten the redirection of the new call. Pressing this button immediately redirects the ringing call and silences the ringing on the called terminal.

INTERACTIONS WITH OTHER FEATURES

The following System 85 features affect or are affected by the operation of this feature.

Call Coverage

The Send All Calls and Cover All functions of the Call Coverage feature take precedence over Abbreviated and Delayed Ringing. These functions control the redirection of ringing.

The Cover Don't Answer function of the Call Coverage feature takes precedence over Abbreviated and Delayed Ringing when the amount of ringing cycles used to time both features are equal.

The details of the don't answer condition are as follows. If the timing interval for the coverage group *is less than or equal to* the timing interval for Abbreviated and Delayed Ringing, terminating calls redirect to coverage without ringing the images(s) assigned delayed ringing. However, if the timing interval for the coverage group *is greater than* the timing interval for Abbreviated and Delayed Ringing, terminating calls first ring the abbreviated ringing image(s). Then, ringing transfers to the delayed ringing image(s), and these images ring for the rest of the Cover Don't Answer timing interval. After the Cover Don't Answer interval elapses, the call redirects to coverage.

Since Call Coverage takes precedence over Abbreviated and Delayed Ringing, ring-ping, if assigned in Release 2, Version 4, is heard for immediately redirected calls at the called party's terminal, except if delayed ringing (encode 2) is active.

Call Forwarding—Busy and Don't Answer

Call Forwarding—Busy and Don't Answer takes precedence over Abbreviated and Delayed Ringing when the amount of ringing cycles used to time both features are equal.

The details of the don't answer condition are as follows. If the timing interval for call forwarding *is less than or equal to* the timing interval for Abbreviated and Delayed Ringing, terminating calls forward to the destination extension without ringing the image(s) assigned delayed ringing. However, if the timing interval for call forwarding *is greater than* the timing interval for Abbreviated and Delayed Ringing,

terminating calls first ring the abbreviated ringing image(s). Then, ringing transfers to the delayed ringing image(s), and these images ring for the rest of the call forwarding timing interval. After the call forwarding timing interval elapses, the call forwards to the destination extension.

Call Forwarding—Don't Answer

Call Forwarding—Don't Answer takes precedence over Abbreviated and Delayed Ringing when the amount of ringing cycles used to time both features are equal.

The details are as follows. If the timing interval for call forwarding *is less than or equal to* the timing interval for Abbreviated and Delayed Ringing, terminating calls forward to the destination extension without ringing the image(s) assigned delayed ringing. However, if the timing interval for call forwarding *is greater than* the timing interval for Abbreviated and Delayed Ringing, terminating calls first ring the abbreviated ringing image(s). Then ringing transfers to the delayed ringing image(s), and these images ring for the rest of the call forwarding timing interval. After the call forwarding timing interval elapses, the call forwards to the destination extension.

Call Forwarding—Follow Me

Call Forwarding—Follow Me takes precedence over Abbreviated and Delayed Ringing. Call Forwarding—Follow Me controls the redirection of ringing.

Ringing Transfer

Ringing Transfer takes precedence over Abbreviated and Delayed Ringing. If an extension on a voice terminal has both an Abbreviated and Delayed Ringing button and a Ringing Transfer button, each button provides *independent* ringing characteristics to the images of an appearance. The ringing characteristics for Abbreviated and Delayed Ringing are specified using the Ring (Alert) Type (Field 11 of Procedure 052, Word 1), while the characteristics for Ringing Transfer are specified using the Ringing Transfer Encode (Field 4 of Procedure 052, Word 2).

HARDWARE REQUIREMENTS

Multiappearance voice terminals are primarily used for this feature. However, one single-appearance voice terminal (administered as a straight line set) can share an appearance with as many as 15 other multiappearance voice terminals. This single-appearance voice terminal is allowed to participate in an Abbreviated and Delayed Ringing relationship.

FEATURE ADMINISTRATION

Assignment of the Abbreviated and Delayed Ringing feature is on a per-system basis. The customer can fully administer this feature using the SMT (System Management Terminal) or the TCM (Terminal Change Management) feature. This feature can also be administered using CSM (Centralized System Management).

The following are the applicable MAAP and SMT procedures.

MAAP AND SMT PROCEDURES
RINGING — ABBREVIATED AND DELAYED

PROCEDURE	WORD	PURPOSE	SMT
052	1	Administers the type of ringing to an image (bridged appearance) on a multiappearance voice terminal or straight line set. Assign *abbreviated ringing* to the image on the primary terminal and *delayed ringing* to the image on the secondary voice terminal.	Yes
052	2	Assigns either automatic or manual transfer of ringing to *both* terminals.	Yes
054	1	Assigns the ABRV RING button to a primary voice terminal. The applicable encode is as follows: 13 Abbreviated and Delayed Ringing.	Yes
061	1	Specifies the number of ringing cycles (2, 4, 8, or 16) used with automatic transfer of ringing.	Yes

The following are the applicable TCM path names used with the AP 16.

TCM SCREENS
RINGING — ABBREVIATED AND DELAYED

PATH NAME	PURPOSE
terminal-change system parameters (select the Signaling option)	Specifies the number of ringing cycles used with automatic transfer of ringing.
terminal-change terminal buttons	Assigns the ABRV RING button to a primary voice terminal.
terminal-change terminal equipment	Assigns the type of ringing to an image (bridged appearance) on a multiappearance voice terminal or straight line set. (Assign *abbreviated ringing* to the image on the primary terminal and *delayed ringing* to the image on the secondary terminal.) Also, use this screen to assign either automatic or manual transfer of ringing to *both* terminals.

The following are the applicable CSM Command Paths utilizing the **admin** area of TCM or FM.

CSM SCREENS — MASKS RINGING — ABBREVIATED AND DELAYED		
APPL'N	**OBJECT**	**PURPOSE**
TCM	This command will be set type: i.e., 36-button, 12-button, bct, vds, feature-module, or data-module.	Administers the type of ringing to an image on a multiappearance voice terminal or SLS. Assigns *abbreviated ringing* to the image on the primary terminal and *delayed ringing* to the image on the secondary terminal. Assigns either automatic or manual transfer of ringing to *both* terminals. Also, assigns the ABRV RING button to a primary voice terminal.
TCM	ringing-parameters	Administers the number of ringing cycles (2, 4, 8, or 16) used with automatic transfer of ringing.

RINGING CUTOFF

DESCRIPTION

The Ringing Cutoff feature turns off ringing at a particular terminal without affecting the status lamp functions.

This feature is useful during a conference, meeting, recording session, or any time that audible ringing might result in an unacceptable interruption.

Feature History and Development

This feature was first available on System 85 in Release 1. There have been no changes to this feature since Release 1.

USER OPERATIONS

The following are the user operating procedures for this feature.

To Activate Ringing Cutoff:

- Be sure the feature isn't activated. [The RINGING CUTOFF green status lamp is dark.]
- Press RINGING CUTOFF. [The RINGING CUTOFF green status lamp lights.]

To Deactivate Ringing Cutoff:

- Be sure the feature is activated. [The RINGING CUTOFF green status lamp is lit.]
- Press RINGING CUTOFF. [The RINGING CUTOFF green status lamp goes out.]

CONSIDERATIONS

RINGING CUTOFF Buttons

A terminal should have only one RINGING CUTOFF button. Additional RINGING CUTOFF buttons serve no useful purpose.

Hard and Soft Processor Swaps

Ringing Cutoff activations are stored in a status portion of switch memory. Therefore, if a voice terminal user activates Ringing Cutoff and then a hard processor swap occurs, Ringing Cutoff will not be activated after the hard swap finishes. At this time, the user can reactivate Ringing Cutoff.

The Ringing Cutoff feature operates normally during a soft processor swap.

INTERACTIONS WITH OTHER FEATURES

The following System 85 features affect or are affected by the operation of this feature.

Call Coverage

When Send All Calls and Ringing Cutoff are both active at a called voice terminal, ring-ping is not provided as the call redirects to coverage.

Call Forwarding—Follow Me

When Call Forwarding—Follow Me and Ringing Cutoff are both active at a called voice terminal, ring-ping is not provided as the call forwards.

Intercom—Automatic, Dial, and Manual

Ringing Cutoff overrides all intercom ringing for the given terminal.

Manual Signaling

Ringing Cutoff denies Manual Signaling for the given terminal.

HARDWARE REQUIREMENTS

Multiappearance voice terminals are required for this feature.

FEATURE ADMINISTRATION

Assignment of the Ringing Cutoff feature is on a per-terminal basis. The customer can fully administer this feature using the SMT (System Management Terminal) or the TCM (Terminal Change Management) feature. This feature can also be administered using CSM (Centralized System Management).

The following is the applicable MAAP and SMT procedure.

MAAP AND SMT PROCEDURE — RINGING CUTOFF			
PROCEDURE	**WORD**	**PURPOSE**	**SMT**
054	1	Assigns the RINGING CUTOFF button to a multiappearance voice terminal. The applicable encode is as follows: 11 Ringing Cutoff.	Yes

The following is the applicable TCM path name used with the AP 16.

TCM SCREEN — RINGING CUTOFF	
PATH NAME	**PURPOSE**
terminal-change terminal buttons	Assigns the RINGING CUTOFF button to a multiappearance voice terminal.

The following is the applicable CSM Command Path utilizing the **admin** area of TCM or FM.

CSM SCREEN — MASK RINGING CUTOFF		
APPL'N	**OBJECT**	**PURPOSE**
TCM	This command will be set type: i.e., 36-button, 12-button, bct, data-module, feature-module, coverage-module, or vds.	Assigns the RINGING CUTOFF button to a multiappearance voice terminal.

RINGING — DISTINCTIVE

DESCRIPTION

This feature lets voice terminal users distinguish between various types of incoming calls. The three distinctive patterns of ringing indicate the types of incoming calls. The patterns of ringing are:

- One-burst ringing — Terminal-to-terminal calls and remote-access calls
- Two-burst ringing — Attendant calls or incoming trunk calls (calls from outside the switch)
- Three-burst ringing — Priority calls, including Automatic Callback, Priority Calling, Callback, or calls to attendants that are answered by designated voice terminals assigned Preselected Call Routing.

The following table shows the timing characteristics of the three types of ringing cycles for System 85. As shown, the duration of a complete cycle is 5.2 seconds, and the intracycle timing is different for each type.

Table 103-1. Timing for System 85 Ringing Cycles

TYPE	INTRACYCLE TIMING	TOTAL TIME
1-Burst	Ringing for 1.2 seconds, silence for 4.0 seconds	5.2 seconds
2-Burst	Ringing for 0.4 seconds, silence for 0.2 seconds, ringing for 0.6 seconds, silence for 4.0 seconds	5.2 seconds
3-Burst	Ringing for 0.2 seconds, silence for 0.1 seconds, ringing for 0.2 seconds, silence for 0.1 seconds, ringing for 0.6 seconds, silence for 4.0 seconds	5.2 seconds

Feature History and Development

This feature was first available on System 85 in Release 1. There have been no changes to this feature since Release 1.

USER OPERATIONS

None.

INTERACTIONS WITH OTHER FEATURES

The following System 85 features affect or are affected by the operation of this feature.

Data Protection

When permanent Data Protection is assigned to a class of service, all ringing for that class of service is 1-burst ringing.

Manual Signaling

When Distinctive Ringing is in progress, Manual Signaling is denied. Broken fluttering on the Manual Signaling status lamp is used to convey the denial.

Queuing

Distinctive ringing for a callback call applies to local switch terminals only. Whenever a callback call is directed over a tie trunk, 1-burst ringing is provided by the local switch.

Ringing Cutoff

Ringing Cutoff silences distinctive ringing for the terminal.

Tenant Services

The switch provides 1-burst ringing for terminal-to-terminal calls inside an extension partition. The switch also provides 1-burst ringing for terminal-to-terminal calls between an extension partition and Extension Partition 0.

Otherwise, terminal-to-terminal calls are not allowed to cross partition boundaries. In order to call a voice terminal in any other partition, a voice terminal user must dial the appropriate 7-digit number that routes the call over a CO (Central Office) trunk. When this is done, the switch provides 2-burst ringing at the called voice terminal.

The switch provides 2-burst ringing for incoming calls from the public network in the usual manner.

In a partitioned System 85, the switch provides the usual 2-burst ringing for direct attendant calls or attendant-extended calls to voice terminals (whenever these calls are allowed by the Tenant Services feature).

When Priority Calling, Override, Automatic Callback, or On-Hook Queuing are provided on the switch and allowed in the partitioned environment, the switch provides 3-burst ringing in the usual manner.

HARDWARE REQUIREMENTS

None.

FEATURE ADMINISTRATION

Distinctive Ringing is provided with all systems and requires no assignment.

RINGING TRANSFER

DESCRIPTION

The Ringing Transfer feature allows a multiappearance voice terminal user to transfer all ringing for a given extension number to other voice terminal(s). When Ringing Transfer is active for an extension, a call terminating to an appearance of that extension rings a predefined subset of the other terminals sharing the same appearance.

For example, an executive who normally receives all calls can transfer ringing to the secretary's voice terminal. This is useful when the executive is out of the office or otherwise occupied.

Feature History and Development

This feature was first available on System 85 in Release 1. In earlier releases, single-appearance voice terminals could not be used with this feature. However, beginning with R2 V2, Issue 1.2, a single-appearance terminal (administered as a straight line set) can function as the secondary (i.e., transferred-to) terminal.

USER OPERATIONS

The following are the user operating procedures for this feature.

To Activate Ringing Transfer:

- Be sure the feature isn't activated. [The RINGING TRANSFER green status lamp is dark.]
- Press RINGING TRANSFER. [The RINGING TRANSFER green status lamp lights.]

To Deactivate Ringing Transfer:

- Be sure the feature is activated. [The RINGING TRANSFER green status lamp is lit.]
- Press RINGING TRANSFER. [The RINGING TRANSFER green status lamp goes out.]

CONSIDERATIONS

RINGING TRANSFER Buttons

Only one RINGING TRANSFER button can be assigned for any one extension number. Ringing Transfer applies only to the extension number associated with the button.

Preselected Subsets

Ringing can be transferred to any preselected subset of the images of an appearance. (An executive with two secretaries, for example, could allow both secretaries to share the first terminating appearance, while allowing only one of the secretaries to share the second terminating appearance. In this way, when Ringing Transfer is active, a call terminating to the first appearance would ring both secretaries, while a call to the second appearance would only ring one secretary.)

Straight Line Sets

Straight line sets (to which RINGING TRANSFER buttons cannot be assigned) cannot function as the primary (transferring) voice terminal in a Ringing Transfer relationship.

Hard and Soft Processor Swaps

Ringing Transfer activations are stored in a status portion of switch memory. Therefore, if a voice terminal user activates Ringing Transfer and then a hard processor swap occurs, Ringing Transfer will not be activated after the hard swap finishes. At this time, the user can reactivate Ringing Transfer.

The Ringing Transfer feature operates normally during a soft processor swap.

INTERACTIONS WITH OTHER FEATURES

The following System 85 features affect or are affected by the operation of this feature.

Call Coverage

Ringing Transfer takes precedence over Call Coverage. Call Coverage controls the redirection of ringing after the ringing cycle has completed at the secondary terminal.

Call Forwarding—Follow Me

Call Forwarding—Follow Me takes precedence over Ringing Transfer. Call Forwarding—Follow Me controls the redirection of ringing.

Ringing—Abbreviated and Delayed

Ringing Transfer takes precedence over Abbreviated and Delayed Ringing. If an extension has both an Abbreviated and Delayed Ringing button and a Ringing Transfer button, each button provides *independent* ringing characteristics to the images of an appearance. The ringing characteristics for Abbreviated and Delayed Ringing are specified using the Ring (Alert) Type (Field 11 of Procedure 052, Word 1), while the characteristics for Ringing Transfer are specified using the Ringing Transfer Encode (Field 4 of Procedure 052, Word 2).

Tenant Services

There are no tests in Procedures 052, Word 2 and 054, Word 1 to ensure that the members of a Ringing Transfer relationship belong to the same extension partition. If the Bridged Call feature is correctly partitioned, the Ringing Transfer feature will also be fully partitioned. It is the responsibility of the system manager to ensure that these relationships do not cross partition boundaries.

HARDWARE REQUIREMENTS

Multiappearance voice terminals are generally used for this feature. However, a single-appearance terminal (administered as a straight line set) can be used for the secondary (transferred to) terminal.

FEATURE ADMINISTRATION

Assignment of the Ringing Transfer feature is on a per-extension basis. The customer can fully administer this feature using the SMT (System Management Terminal) or the TCM (Terminal Change Management) feature. This feature can also be administered using CSM (Centralized System Management).

The following are the applicable MAAP and SMT procedures.

MAAP AND SMT PROCEDURES
RINGING TRANSFER

PROCEDURE	WORD	PURPOSE	SMT
052	2	Administers Ringing Transfer characteristics (including the extension and appearance number) to an image on a multiappearance voice terminal or straight line set.	Yes
054	1	Assigns a RINGING TRANSFER button to a multiappearance voice terminal. 12 Ringing Transfer.	Yes

The following are the applicable TCM path names used with the AP 16.

TCM SCREENS RINGING TRANSFER	
PATH NAME	**PURPOSE**
terminal-change terminal buttons	Assigns a RINGING TRANSFER button to a multiappearance voice terminal.
terminal-change terminal equipment	Administers Ringing Transfer characteristics (including extension and appearance number) to an image on a multiappearance voice terminal or straight line set.

The following is the applicable CSM Command Path utilizing the **admin** area of TCM or FM.

CSM SCREEN — MASK RINGING TRANSFER		
APPL'N	**OBJECT**	**PURPOSE**
TCM	This command will be set type: i.e., 36-button, 12-button, bct, data-module, feature-module, coverage-module, or vds.	Administers Ringing Transfer characteristics (including the extension and appearance number) to an image on a multiappearance voice terminal or straight line set. Also, assigns a RINGING TRANSFER button to a multiappearance voice terminal.

ROUTE ADVANCE

DESCRIPTION

This feature automatically reroutes outgoing calls over alternate trunk groups when the initially-accessed trunk group is busy.

The Route Advance feature offers efficient use of available trunk groups. To provide minimum traffic interference, the first-choice trunk group could be 1-way outgoing trunks. Subsequent trunk groups might be 2-way. The alternate trunk groups are used primarily for incoming traffic. This allows spill over from the first-choice trunk group. The last (fifth-choice) trunk group could be assigned for Remote Access. These remote access trunks, being the last-choice trunk, should then remain virtually unblocked for Remote Access. The trunk access code determines the first-choice trunk group.

Feature History and Development

This feature was first available on System 85 in Release 1. There have been no changes to this feature since Release 1.

USER OPERATIONS

The Route Advance feature is fully automatic. There are no user operations required.

CONSIDERATIONS

Lists

Each Route Advance list can have five trunk groups assigned (one first-choice group and four alternate trunk groups).

Trunk Compatibility

Compatible trunk groups should be assigned to each Route Advance list. That is, all alternate trunk groups should be capable of passing the same calls to the same locations as the first-choice trunk group. An FX (Foreign Exchange) trunk group should not be used in the same Route Advance list with local CO (Central Office) or WATS (Wide Area Telecommunications Service) trunk groups.

INTERACTIONS WITH OTHER FEATURES

The following System 85 features affect or are affected by the operation of this feature.

Attendant Control of Trunk Group Access

The Route Advance feature overrides Attendant Control of Trunk Group Access unless attendant control is active on the first trunk group in the Route Advance pattern. Attendant Control of Trunk Group Access works for the first trunk group of a Route Advance pattern. However, once the switch has activated a Route Advance pattern, the Attendant Control of Trunk Group Access feature provides no control over trunk groups that appear later in the pattern.

Call Vectoring

The first trunk group in a Route Advance sequence can be programmed as the destination of a ‘‘route to’’ vector step. When this is done, the call can route over an idle trunk in an alternate trunk group in the sequence.

Data Call Setup

The Route Advance feature provides access to as many as five trunk groups with a single access code. When every circuit in the first trunk group is busy, the switch checks the other trunk groups for an idle circuit. Since each data trunk group can contain as many as 99 trunks, this arrangement can provide access to as many as 495 DCA ports using a single dial access code.

Host Computer Access

The Route Advance feature provides access to as many as five trunk groups using a single access code. When every circuit in the first trunk group is busy, the switch checks the next trunk group, and so on. Since each data trunk group can contain up to 99 trunks, Route Advance can provide access to as many as 495 computer ports with a single dial access code.

ISN (Information Systems Network) Interface

The Route Advance feature provides access to as many as five trunk groups with a single access code. When every circuit in the first trunk group is busy, the switch checks the next trunk group and so on. With up to 256 trunks in a trunk group, this provides up to 1280 port appearances with a single access code.

Precedence Calling

An outgoing AUTOVON call with a ROUTINE precedence can be routed over nonprecedence capable trunks when precedence capable trunks are not available. However, for calls with a precedence higher than ROUTINE, only precedence capable trunks may be included in the Route Advance pattern.

Queuing

When the Queuing feature is assigned with Route Advance and every trunk group in the Route Advance list is busy, the call queues on the designated trunk group. The switch then periodically scans the trunk group for an available trunk. If a trunk is not available in the first-choice trunk group, the switch checks the alternate trunk groups for an available trunk. Should the first-choice trunk group not be assigned to the queuing list, the call is not placed in queue. Rather, the switch returns reorder tone (fast busy tone) to the calling party.

ARS (Automatic Route Selection): If the ARS feature is also provided and if the ARS queuing trunk group is the same as the Route Advance queuing trunk group, ARS calls served from the queue can access the Route Advance list.

Restriction—Code Restriction

When a CO (Central Office) trunk group is assigned to the CO (primary) code restriction list, any associated route advance CO trunk groups with the same restrictions need not be assigned to individual code restriction lists. They default to the same restrictions as the CO trunk group assigned to the CO code restriction list. However, if a CO trunk group is assigned to an FX (secondary) code restriction list and is in a route advance sequence, every CO trunk group in the sequence must be assigned to a separate code restriction list and given the same allowed codes. If any of the CO trunk groups in the sequence are not assigned to an FX code restriction list, they default to the CO (primary) list.

Tenant Services

When the Route Advance feature is invoked for an outgoing call in a partitioned switch, the call-processing software checks each alternate trunk group in the list to ensure that the calling party's extension partition is allowed to use the trunk group.

The details are as follows. When a user attempts to place a call over an outgoing trunk group, the switch checks to determine whether the user is allowed to use the trunk group and whether there is an available trunk in the group. If one of these conditions is not met, the switch then checks to determine whether a Route Advance list is assigned to the originally dialed trunk group. If a list *is not assigned*, the switch returns intercept treatment to the calling party (for trunk group denials), or returns reorder tone or queues the call (for a busy trunk group). If a Route Advance list *is assigned* to the originally dialed trunk group, the switch checks the first trunk group in the list to determine whether the user is allowed to use the trunk group and whether there is an available trunk in the group. If one of these conditions is not met, the switch performs the same check on successive trunk groups in the list until: the call can be completed over an allowable and available trunk, an available trunk cannot be found (the call is queued, or reorder tone is returned), or an allowable trunk group cannot be found (intercept treatment is returned).

The recommended approach for assigning Route Advance lists is to assign trunk groups that are dedicated to a partition as the initial trunk groups in the list. These trunk groups can be followed by shared trunk groups that are also accessible to the same partition. However, there are no tests in Procedure 100, Word 4 to prevent other ways of assigning these lists. It is the responsibility of the system manager to ensure that the Route Advance lists are designed in a practical manner.

HARDWARE REQUIREMENTS

None.

FEATURE ADMINISTRATION

Assignment of the Route Advance feature is on a per-trunk group basis. The customer can partially administer this feature using the SMT (System Management Terminal). This feature can also be administered using CSM (Centralized System Management).

The following are the applicable MAAP and SMT procedures.

MAAP AND SMT PROCEDURES — ROUTE ADVANCE			
PROCEDURE	**WORD**	**PURPOSE**	**SMT**
100	4	Assigns trunk groups to the Route Advance sequence.	No
330	2	Assigns Route Advance to Queuing.	Yes

The following are the applicable CSM Command Paths utilizing the **admin** area of TCM or FM.

CSM SCREENS — MASKS ROUTE ADVANCE		
APPL'N	**OBJECT**	**PURPOSE**
FM	trk-grp	Administers trunk groups to the Route Advance sequence.
FM	trk-grp-queue	Assigns Route Advance to queuing and trunk queuing thresholds.

SERIAL CALLS

DESCRIPTION

This feature allows an attendant to connect a caller from the public network to two or more voice terminals in succession.

The attendant extends the call and when a talking path is made, places the connected parties on a held loop. After the conversation is finished and while still in a talking condition, the internal voice terminal user momentarily presses the switchhook or the RECALL button to reconnect the attendant. With the attendant back into a 3-way talking connection, the called party can go on-hook and the calling party can request additional assistance. When the called party goes on-hook without recalling the attendant, the calling party reconnects to the attendant after 30 seconds.

This feature provides a time and cost savings for a long-distance caller. The separate, shorter calls are attached into a single, longer call. The cost savings occurs since the highest cost per time segment occurs at the beginning of a call. Also, the feature furnishes a professional business image to the customer.

Feature History and Development

This feature was first available on System 85 in Release 1. An administrable recall button is provided for R2 V4 and was also retrofitted to the R2 V2 and R2 V3 software packages.

USER OPERATIONS

The following are the user operating procedures for this feature.

Voice Terminal User Requesting a Serial Call:

- Call the attendant using the Dial Access to Attendant feature, or any other appropriate means available.
- When each step of the Serial Call is completed, flash the switchhook (if you are on a 2500 Series terminal), or press RECALL.

Attendant Support of a Serial Call:

- Obtain calling sequence instructions from calling party.
- Press START [Dial tone]
- Dial the next desired extension,

or

- Use the DXS button for the next desired extension. [Call-progress tone]
- Press HOLD when the called party answers. [Hold lamp lights.]
- After RECALL is received and the called party goes on-hook, repeat the preceding sequence until the Serial Call has been completed.

CONSIDERATIONS

Two-Party Hold

Two-Party Hold on Console must be assigned if Serial Calls is provided.

The attendant must hold the incoming connection until every call except the last is finished. On the final call, the attendant can release the call from the console after extending the call.

Trunk-to-Trunk Connections

The Trunk-to-Trunk Connection features must be assigned if a serial call is to be extended from an incoming trunk to an outgoing trunk.

Calling Party Recall

The called party must call the attendant at the end of the call before hanging up to eliminate the 30-second wait between calls.

Administrable Recall Buttons

Some multiappearance voice terminals do not have a fixed RECALL button. If RECALL buttons are needed for these voice terminals, RECALL buttons can be assigned to the terminals using Procedure 054, Word 1.

Hard and Soft Processor Swaps

If a hard processor swap occurs while a Serial Call is held on an attendant console, the Serial Call is dropped.

If a hard processor swap occur while an attendant is connected to the Serial Call, the 2- or 3-party connection endures the hard swap. However, the attendant cannot extend the calling party to another voice terminal during the hard swap.

The Serial Calls feature operates normally during a soft processor swap.

INTERACTIONS WITH OTHER FEATURES

The following System 85 features affect or are affected by the operation of this feature.

Attendant Auto—Manual Splitting

If the Serial Calls feature is provided, the call is not split when an attendant presses the HOLD button to hold the call on the console.

Bridged Call

Bridging is allowed for a shared appearance that is involved in a Serial Call.

Busy Verification of Lines

Busy Verification of Lines is denied toward a line involved in a serial call.

CSMDR (Centralized Station Message Detail Recording)

If the calling party in a serial call is an incoming trunk and is marked for SMDR, the duration of each called party is recorded separately. If the calling party is a local terminal user, only the outgoing trunks marked for SMDR are recorded.

Call Pickup

When Serial Calls is in effect, pressing the RECALL button at a local terminal recalls the attendant. Therefore, a terminal user cannot access the Call Pickup feature during a serial call.

Conference—Attendant Six Party

Serial Calls is denied when the called party is involved in an attendant established conference.

Conference—Three Party

For terminals without CONFERENCE or TRANSFER buttons, when Serial Calls is in effect, pressing the RECALL button at a local terminal or momentarily pressing the switchhook, recalls the attendant. Therefore, these terminal users cannot use the Conference—Three Party feature during a serial call.

Override

The Override feature is denied when directed toward a line or trunk involved in a serial call.

Privacy—Attendant Lockout

When the Privacy—Attendant Lockout feature is assigned, the attendant cannot reenter a trunk-to-terminal/terminal-to-trunk serial call without being recalled. Privacy—Attendant Lockout is automatically disabled for trunk-to-trunk serial calls.

SMDR (Station Message Detail Recording)

If the calling party in a serial call is an incoming trunk and is marked for SMDR, the duration of each called party is recorded separately. If the calling party is a local terminal user, only the outgoing trunks marked for SMDR are recorded.

Tenant Services

The Serial Calls feature is naturally partitioned on System 85. In a properly partitioned switch, an attendant cannot receive a call that breaks the rules of partitioning. The attendant must extend each call according to partitioning rules. And, the Serial Calls feature always returns the call to the same attendant console that extended the initial call of the series.

Transfer

When Serial Calls is in effect, pressing the RECALL button at a local terminal recalls the attendant. Therefore, a terminal user cannot access the Transfer feature during a serial call.

Trunk Verification—Attendant and Voice Terminal

The Trunk Verification feature is denied toward a trunk involved in a serial call.

Variable Format Call Detail Recording

The call record shows each call in a serial call, including call duration, separately.

HARDWARE REQUIREMENTS

None.

FEATURE ADMINISTRATION

Assignment of the Serial Calls feature is on a per-system basis. This feature is administered using the MAAP. This feature can also be administered using CSM (Centralized System Management).

The following are the applicable MAAP and SMT procedures.

MAAP PROCEDURE — SERIAL CALLS			
PROCEDURE	**WORD**	**PURPOSE**	**SMT**
054	1	Assigns the RECALL button to a multiappearance voice terminal without a fixed RECALL button. The applicable encode is: 27 Recall.	Yes
200	1	Assigns the 2-Party Hold capability to the attendant console(s).	No

The following are the applicable CSM Command Paths utilizing the **admin** area of TCM or FM.

CSM SCREENS — MASKS SERIAL CALLS		
APPL'N	**OBJECT**	**PURPOSE**
TCM	This command will be set type: i.e., 36-button, 12-button, bct, data-module, feature-module, coverage-module, or vds.	Administers the RECALL button to a multi-appearance voice terminal without a fixed RECALL button.
TCM	console-features	Assigns the 2-party hold capability to the attendant console(s).

STATION MESSAGE DETAIL RECORDING

DESCRIPTION

The SMDR (Station Message Detail Recording) feature collects and reports detailed call information on selected trunk groups. This call detail information can be used for cost allocation, traffic analysis, and security (detecting unauthorized calls).

CDR Record

Call information is collected inside the System 85 CDR (Call Detail Recording) record and is routed to output ports shown as shown in Figure 107-1. The SMDR (Station Message Detail Recording) port and SMDR adjunct together make up the SDMR feature.

Call information from the CDR record is output at four different port types as shown in Figure 107-1. The adjuncts and peripherals for CDR ports other than the SMDR port are not shown in this figure.

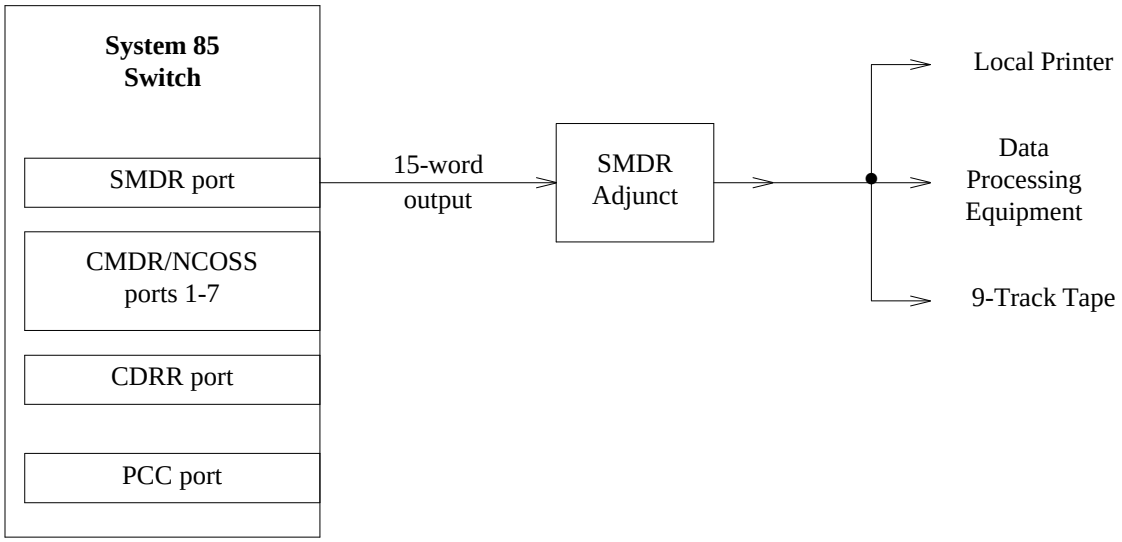

Figure 107-1. Call Record Output Arrangements

The SMDR Adjunct

The SMDR adjunct can store a maximum of 16 CDR records at a time, before automatically outputting records to a peripheral.

Calls Not Recorded Calls

Since the SMDR feature is assigned to selected trunk groups, terminal-to-terminal calls and calls that do not involve a selected (for SMDR reporting) trunk groups, are not recorded.

Feature History and Development

The SMDR feature was first available with System 85 in Release 1. Since then, the following enhancements have been made available:

- Expanded account codes (to 15 digits), first available in R2, V3
- Forced entry of account codes, first available in R2, V3 The optional FEAC (Forced Entry of Account Codes) enhancement was developed in R2 V3 to force the user to enter an account code based on the call characteristics and administered restrictions. FEAC provides the customer with a method of accounting for calls based on the following three categories:
  - User's class of service for toll calls. A toll call is categorized by the following:
    a. ARS calls.
    b. When the first digit of a CO (Central Office) call is a one.
    c. When an area code is dialed.
    d. When the dialed office code is administered as a toll office code.
  - The call accesses a trunk group.
  - Accounting is done on a system basis when ARS is used.
- Increased record capacity (up to eight LSUs), first available in R2, V3.
- Flexible call record start time by trunk group and system, first available in R2, V3.

Since the development of SMDR, other methods of recording and reporting call detail information have been provided by System 85. The CMDR (Centralized Message Detail Recording), and VFCDR (Variable Format Call Detail Recording) features are discussed in their own feature section within this manual.

The CDR Record

Call information is collected by the switch in a record called the CDR record. The data items from the CDR record can be output in five different *Formats*. In the following list, the format shown in bold applies to the SMDR feature. The other formats are associated with other features.

— **Default 15-word** (See Figure 107-2)

— Default 18-word (See the CMDR feature)

— Recommended Standard 18-word ISDN (See the VFCDR feature)

— Recommended Standard 24-word (See the VFCDR feature)

— Variable format (See the VFCDR feature).

This data base uses one of the three following *account code* structures. Notice that the account code is part of the call record shown in Figure 107-2.

- Standard: 1 to 5 digits
- Expanded: 6 to 12 digits
- Expanded: 13 to 15 digits.

The SMDR port can be administered to provide 15- or 18-word formats (15-word for SMDR direct output, 18-word for LSU portability) while CMDR and CDRR use the same 18-word format. The VFCDR output available on the PCC port is variable between 15- and 24-word formats to provide for a variety of applications. All CDR formats available on System 85 use the 4-byte, 16-bit word structure shown in Table 107-A.

Table 107-1. Call Detail Record Word Structure

FIELD ID	**Byte 4**	**Byte 3**	**Byte 2**	**Byte 1**
BITS USED	15 14 13 12	11 10 09 08	07 06 05 04	03 02 01 00
CONTENTS	Opcode	Call Data	Call Data	Call Data

The opcode field is used for hardware control and on-line error checking (identifies the end of a record). However, this opcode is never received by the polling devices. Note that the 24-word and variable format records do not require opcodes if used with the 3B2 CDRU. If the 3B2 CDRU is being used as the local storage unit, the opcode fields are used as data fields.

DATA PRESENTATIONS FROM THE SWITCH

- **SMDR Port**:
  - — 15-Word Direct Output BCD Code
  - — 18-Word Direct Output BCD Code.
- CMDR/NCOSS Port:
  - — 15-Word Direct Output BCD Code
  - — 18-Word Direct Output BCD Code.
- CDRR Port:
  - — 15-Word Direct Output BCD Code
  - — 18-Word Direct Output BCD Code.
- PCC (TN-474B) Port:
  - — 15- to 24-Word BCD with BTC (Better Transmission Checks) Protocol
  - — 18-word Formatted ASCII Direct Output
  - — Unformatted ASCII Direct Output.

EXISTING DATA ITEMS (PREVIOUS TO R2 V4)

Call information available from the CDR record includes the following:

- Call Duration. This field measures the timing of a call. It contains a total of four characters, representing hours (0 through 9), minutes (0 through 59), and 6-second intervals within each minute (0 through 9). The call-duration timing in the CDR record varies with the type of call as follows:
  - For AAR/ARS calls, prior to System 85, R2 V3, the call-duration timing started right after the last digit was dialed with an error margin from 0 to 12 seconds. System 85, R2 V3 and later releases have the Variable Call Completion Threshold feature that can set the delay time between end of dialing and start of charging on either a per-trunk group or a per-system basis. The administrable time can be from 1 to 99 seconds in 1-second increments. If neither trunk group or system time is administered, a fixed 6-second default time is used.
  - For CO, TIE, and FX trunk groups, prior to System 85, R2 V3, the call-duration timing started 10 seconds after the last digit was dialed with an error margin of 0 to 12 seconds. For these trunk groups, there is also an administrable timing parameter in System 85, R2 V3, on a per-trunk group or a per-system basis. In the case of an AAR/ARS call over a CO, TIE, or FX trunk group, the call-duration timing scheme for AAR/ARS overrides that for CO, TIE, or FX trunk group.
  - Calls can be queued if the call-processing software is unable to find any available trunks. Queued calls do not start timing until they come out of queue. As a result, the call-duration time does not include the time in queue.
- Condition Code. The Condition Code is a single-digit alpha or numeric character field that defines the type of call or information recorded in a particular call record.
- Access Code Dialed. This 3-digit field can be the Automatic Route Selection access code or the access code of a specific trunk group.
- Access Code Used. This 3-digit field contains the access code of the actual trunk group that the call was routed over.

  If the Access Code Dialed and the Access Code Used have the same value, the Access Code-field appears blank.
- Dialed Number. This field contains up to 15 digits and is the number dialed by the system user.
- Calling Number. This field contains the trunk access code on incoming calls. The Calling Number contains up to four digits before System 85, R2 V1. After R2 V1, the Calling Number field can be up to five digits but the fifth digit is recorded in a separate field.
- Account Code. This field contains an optional user-dialed account number that further identifies a specific call. Prior to System 85, R2 V3, this field was five digits long. The capability to assign a flexible account code, up to 15 digits, was introduced in System 85, R2 V3. If a user administers an account code greater than five digits, it overrides other fields, such as authorization code, time-in-queue, and/or FRL in the record. If account codes are not used, this field is blank.

Table 107-2. CDR Condition Codes

CODE USED		DESCRIPTION
9-Track Tape	**Direct Output**	
1	A	Attendant handled calls (except conference calls).
2	B	Adding to the list of SMDR monitored trunk groups.
3	C	Removing from the list of SMDR monitored trunk groups.
4	D	A long hold time call (10 hours or more). Calls with this condition code and a duration of 9 hours, 59 and 9/10 minutes are reported each 10-hours. When these calls end, a final record with the remaining call duration is also reported.
5	E	Maintenance Test data record. *Ignore* in call data compilations.
6	F	System reload. *Ignore* in call data compilations.
7	G	Calls handled by the AAR or ARS features (overrides condition codes 1, 9, and C).
8	H	Calls that have been handled by the Queuing feature.
9	I	Incoming or tandem trunk calls.
A	—	Outgoing calls.
B	—	Not used.
C	L	Conference Call—Attendant 6-Party. A separate call record is produced for each outgoing conference connection.
D	M	ARS plan change data.
E	N	Unsuccessful call, either an incoming call or an outgoing AAR or ARS call. Includes incoming call failures for any reason and outgoing calls routed to reorder tone or intercept.
F	O	Unsuccessful outgoing AAR or ARS call due to insufficient FRL.

- Authorization Code. This 7-digit field further identifies the call and indicates the outgoing calling privileges of the caller. If authorization codes are not used, this field is blank.
- Time-in-Queue. This 2-digit field indicates the time that the outgoing call has spent in a trunk group's queue. It represents minutes for ringback queue or tenths of minutes for off-hook queue. When a ringback and off-hook queue are both provided on the same outgoing trunk, voice terminals use the ringback queue, and trunks use the off-hook queue. This field is blank if no queuing is used.
- FRL (Facilities Restriction Level). This field contains a 1-digit number that indicates the level of service associated with the calling privileges for the call. This field is the FRL of the authorization code used for the call unless no authorization code is used; in which case, it is the FRL of the originating extension. FRLs are supplied for ARS/AAR calls and for Remote Access calls if FRL is active for Remote Access. Otherwise, the FRL field is blank.

Hardware Configurations

Configurations vary according to port, processor, and peripheral devices. Only the most commonly used storage units, processing products, and peripherals are mentioned.

- Ports: **SMDR**, CMDR/NCOSS, CDRR and PCC.
- Associated Processing and Storage Units: **9-Track Tape**, 94A LSU, 93B CPS, AP-16 and 3B2 CDRU, **SMDR Adjunct**, CSM, NCOSS, and CAS.
- Peripheral devices: **local printers, data-processing equipment, 9-track tape drives, remote processing centers**.

THE CDR PORTS

SMDR Port:

The System 85 collects call detail information in the CDR record (in memory). The switch sends this information (as the switch receives it) to the SMDR adjunct over the SMDR port. The information is then formatted by the SMDR adjunct and sent to an output device. This SMDR arrangement can output directly to a printer, 9-track magnetic tape, or customer's data processing equipment.

Output from the SMDR port for SMDR applications uses a 15-word structure. Expanded account codes (up to 15 digits) can be recorded; however, the expanded account number will be recorded in the following fields respectfully (authorization code, time-in-queue, and FRL). Note that fields such as IXC (Interexchange Carrier) codes, circuit IDs, and the first digit of a 5-digit extension number are not recorded by SMDR.

- Direct Output to Printer: The output may be may be formatted before printing, or can appear in raw form. This arrangement is suitable for a system with a relatively low rate of reportable call activity.
- Direct Output to 9-Track Tape: The 9-track unit is used with systems that output a high volume of call recorded information. The System 85 can output call detail records faster than most printers are capable of processing. The 9-track unit is capable of storing the records and sending them to the off-line processor upon demand.
- Direct Output to Customer Provided Data Processing Equipment: The data output from the SMDR unit uses ASCII characters that are readable by most data processing systems provided by the customer. Output handled in this way can be processed as the user desires, consistent with the capabilities of the data processing equipment being used.

* Registered trademark of AT&T.

CMDR/NCOSS Port:

The CMDR/NCOSS port outputs CDR records to one or more 94A LSUs (Local Storage Unit) for temporary storage. The 94As can then be polled by a 93B to collate and centralize call detail information. This arrangement supports both CMDR and network monitoring through NCOSS. Refer to the CMDR feature for details.

CDRR Port:

The CDRR port passes call information to the CDRR feature available on the AP-16 Processor. Refer to AP-16 documentation for details.

PCC Port:

The PCC port outputs CDR records to a 3B2 CDRU (Call Detail Recording Unit), or customer peripheral. The VFCDR feature is used on the PCC port to provide the customer with a customized call record format. The VFCDR record format is variable between 15 and 24 words long. Refer to the VFCDR feature for details.

All four adjuncts, SMDR, 94A LSU, AP-16, and 3B2 use the same data base record (The Call Detail Record inside the switch) as a source for call detail information. Similar information is output to all four port types (SMDR, CMDR/NCOSS, CDRR, and PCC). The only difference in port output is the number of words in a record. Older adjuncts to the switch cannot receive the new enlarged CDR records provided. The switch is designed to support not only the new adjuncts, but the old adjuncts as well. For example, the SMDR adjunct cannot receive 5-digit extension numbers; therefore, the switch truncates the fifth digit. Through administration (Procedure 275) the SMDR port is capable of outputting 5-digit extensions, (requires 18-word format) and can be administered as an eighth CMDR/NCOSS port. The type of adjunct used, determines how the ports are administered to receive CDR records.

ASSOCIATED STORAGE UNITS

The 3B2 CDRU:

See the ‘‘ASSOCIATED STORAGE UNITS’’ section of the VFCDR feature.

The 94A LSU:

As the record size grew to 18 words, a 94A LSU (Local Storage Unit) was introduced for collection and storage of the data. The 94A LSU supports the standard 15-and 18-word, and 18-word ISDN record formats, but not the 24-word or variable format. Refer to the CMDR feature for specific details.

The 93B CMDR:

For customers with multiple locations, the 94A LSU in each location can be polled by a centralized device called the 93B CMDR (Centralized Message Detail Recorder). The 93B CMDR connects to a 94A LSU through a 212A or equivalent data set over the DDD network. Refer to the CMDR feature for specific details.

Direct Output SMDR Adjunct:

The Direct Output SMDR is connected directly to the SMDR port. The switch outputs BCD (Binary Coded Decimal) to the SMDR adjunct which is then converted by the adjunct to ASCII (American Standard Code for information exchange). The SMDR adjunct stores the ASCII call record in RAM before outputting to a peripheral. The capacity of the memory allows the 16 call records to be stored. If 16 call records are stored and another call comes in, the incoming call creates a memory overflow and forces the SMDR to output call records. Call records are output from SMDR on a first-in first-out basis. See "ASSOCIATED PROCESSORS for information on TELESEER SMDR (a combination storage, processing and output device)."

9-Track Tape Unit:

- Memory Capacity

  The 9-track tape system provides a call storage medium with significantly greater call data storage capacity than is available from the direct output printer unit.

  a. The 9-track unit itself has buffering capacity that can store call data for about 31 calls.

  b. A single 9-track tape can store call data information for about 330,000 calls.

- Reports From 9-Track Tape

  When the user desires a printout of call activity, the 9-track magnetic tape requires off-line processing (software decoding). This must be provided by the user. The output from the magnetic tape can be grouped according to user specifications. For example, output can be grouped by type of call, account number, specific date, etc.

- Tape Drive Maintenance

  The tape must be temporarily removed or changed once a month to allow maintenance of the tape drive.

  Call records cannot be written while the tape is being changed. Tapes should be changed during periods of low traffic.

- Tape Specifications

  High-quality magnetic tape is strongly recommended for use with the 9-track system. To assure reliability, the customer should only buy tape that is full-width certified, and permanent error-free at 3200 flux changes per inch. This performance should be reached with the tape output voltage level at least 35 percent of the tape saturation level. The tape manufacturer should guarantee this performance level at final inspection.

ASSOCIATED PROCESSORS

TELESEER

TELESEER SMDR can be connected as an SMDR storage, processing, and output device. It can store as many as 28,000 call records, 500 extension numbers, and 2000 account codes. TELESEER SMDR uses the CDR output to generate four reports:

- Summary Report — This report provides a condensed listing of the number, duration, and cost of outgoing calls.

- Account Code Report — This report provides information on any call record that contains an account code. This information can be used to track calls from specific users, cost allocation, or user billing.

- Activity Report — This report lists call record details for each extension assigned to a System 75.

- Selection Report — This report helps the System Manager specify information to be printed in the report. Date, Time Duration, and Cost of each call can be specified by the Manager.

For more information on TELESEER SMDR System, refer the CDR Reference Manual (555-006-202). The Standard 15-Word Default Record is shown in Figure 107-2.

	15 14 13 12	11 10 09 08	07 06 05 04	03 02 01 00
01	Opcode	Hours	Call Duration Minute (Xx)	Minute (xX)
02	Opcode	10th Minute	Condition Code	Access Code 1
03	Opcode	Access Code 1		Access Code 2
04	Opcode	Access Code 2		Dialed Number
05	Opcode	Dialed Number		
06	Opcode	Dialed Number		
07	Opcode	Dialed Number		
08	Opcode	Dialed Number		
09	Opcode	Dialed Number		Calling Number
10	Opcode	Calling Number		
11	Opcode	digit 1	Account Code digit 2	digit 3
12	Opcode	Account digit 4	Code digit 5	Authorization Code
13	Opcode	Authorization Code		
14	Opcode	Authorization Code		
15	Opcode	Time in Queue		FRL

Variable-Length Account Code*

* The Account Code can vary in length from 1 to 15 digits. The length is administered in Procedure 275, Word 1. If the Account Code exceeds five digits, the Authorization Code is lost.

If it exceeds 12 digits, the Time-in-Queue field is lost. If 15 digits long, the FRL field is lost.

Figure 107-2. Standard 15-Word Default Record

Figure 107-3 is an example of call information from the SMDR feature. This sample shows calls in chronological order. The form and order can be changed to meet user needs.

Date: 5/5/87

Time of Day	Duration	Cond Code 9-Trk	Trunk Group Dialed	Route Advance to Trunk Group	Dialed Number	Calling Number	Account Code	Authori-zation Code	Time in Queue	FRL	See Notes
10:43	0:09.9		9		1-317-265-7894	6113					1
10:44	0:05.1		81	82	1-317-357-7192	46181					2
10:44	0:11.5	1	82		303-451-1857	46374	16113				3
10:54	0:15.6		9		765-5751	43711					4
10:58	0:05.3		83		319	46113					5
11:05	0:02.4	9			44259						6
11:15	0:14.7	9	9		1-317-357-7192	7					7
11:30	0:06.5	9	9		1-213-357-1212	44456			01		8
12:11	9:59.9	4	9		1-303-452-3057	356	152				9
15:09		2	81	83	7						10
15:09		3	9	41 57 58 59	73	74					11
09:03	0:03.2	7	9	83	1-303-424-6112	43634	23541	7365810		2	12
09:30	0:16.2	C	9		723-1401						13
14:22	0:18.1	7	8	734	321-7866	44638	58732	3347721		1	14
16:30	0:24.5	7	8	735	638-4034	18				4	15
11:38		D				0000				2	16
09:51	0:08.2	9			3222	16	303				17
09:01	0:06.8	7	8	736	536-2487		201	36852		2	18
13:19	0:14.3	7	8		434-3226	732	315	52168		1	19
12:08	0:09.5	7	8	737	776-8621	733	212	34523		2	20
14:26	0:00.1	E	8		341-7894	44864	36185	28734		3	21
15:03	0:00.1	F	8		1-315-342-2368	43715		46213		1	22
15:04	0:04.5	9	2		2015	7					23
15:04	0:10.5		9		415-4196	2015					23
15:10	3:00.0	4	9		1-303-452-3057	3561	152				24
15:12	0:00.1		9		451-1419	2016					25
15:14	0:05.4	C			2015	73					26
15:14	0:04.9	C	9		451-4110	73					26
15:20	2:17.0		2		345	3222					27
15:22	2:54.1		71		2345	3222					28

Figure 107-3. Example of SMDR Call Information Report

NOTES:

1. Outgoing call over long distance
2. Outgoing call with Route Advance over long distance
3. Outgoing call placed by attendant and charged to account code
4. Local outgoing terminal to terminal call
5. Outgoing tie trunk call requiring 3-digit dialing of terminal of distant end
6. Incoming call completed to terminal
7. Incoming call completed to outgoing trunk
8. Outgoing call served by queuing feature
9. Long duration outgoing call (see Note 24)
10. Begin or continue monitoring of these trunk groups
11. Discontinue monitoring of these trunk groups
12. Call Record example of outgoing trunk call with Automatic Alternate Route selection
13. Call record example of attendant conference call
14. Call record example of outgoing trunk call with Automatic Alternate Routing
15. Call record example of incoming trunk completed to outgoing trunk with Automatic Alternate Routing
16. Call Record example of Automatic Route Selection pattern change to pattern 2
17. Incoming remote access call to terminal
18. Incoming remote access call completed to outgoing trunk with AAR
19. Incoming call on WATS trunk to attendant and extended to the terminal with AAR
20. Incoming call on WATS trunk attendant and completed to outgoing trunk with AAR
21. Ineffective attempt of outgoing call
22. Ineffective attempt of outgoing call
23. Incoming call to extension 2015, extension 2015 flashes and adds CO Trunk 451-4196 on 3-way conference
24. Second part of long duration call (see Note 9)
25. Partially dialed outgoing call from extension 2016
26. Incoming call to attendant requesting attendant conference
27. Main/satellite call (without multidigit steering)
28. Main Satellite call (with multidigit steering)

USER OPERATIONS

The SMDR feature reports on selected trunk groups. These trunk groups are identified in switch translations (see ‘‘Feature Administration.’’) Once a trunk group has been identified as reportable, actual reporting is controlled from the attendant console at the recording switch. The attendant can control (turn on or off) reporting on an individual trunk-group basis.

To Activate Trunk Group Recording:

- Press an idle loop button. [PA lamp goes out]
- Press the START button. [Dial tone]

- Dial the SMDR—Start access code. [Second dial tone]
- Dial the access code for the desired trunk group. [Recall dial tone]

  NOTE: The previous step can be repeated for various trunk groups.
- Press the RELEASE button. [PA lamp lights]

To Deactivate Trunk Group Recording:

- Press an idle loop button. [PA lamp goes out]
- Press the START button. [Dial tone]
- Dial the SMDR—Stop access code. [Second dial tone]
- Dial the access code for the trunk group you want to stop recording. [Recall dial tone]

  NOTE: The previous step can be repeated for various trunk groups.
- Press the RELEASE button. [PA lamp lights.]

CONSIDERATIONS

ASCII Character Code
All output forms use the standard ASCII character code.

Attendant Assisted Completion through
If Forced Entry of Account Codes is active, calls directed to the attendant either by dialing the attendant access code or by an intercept condition do not require account code for completion.

If an account code is desired by the customer, the attendant may enter the account code.

Attendant Originated Call Through
Even though Forced Entry of Account Codes is active, the attendant is not required to enter an account but will be permitted to do so.

CAS (Centralized Attendant Service)
The SMDR feature is compatible with the CAS feature. The call record shows calls extended by either a centralized attendant or backup voice terminal.

CDR Portability
CDR records can be output to all the ports simultaneously.

Cabinet Separation
The SMDR cabinet must be located within 200 feet of the common control cabinet because of high-speed data transmission between the two systems. The SMDR cabinet should not be located in a building without lightning protection.

Direct Output

- Memory Capacity

  The direct output memory has the capacity to store call data for up to 16 calls at a time.

- The COMM-Stor* II System

  The COMM-Stor II system is available to increase the storage and formatting capabilities available from direct output. COMM-Stor II receives call records from the SMDR adjunct (direct output) and can process the call record data according to user specifications.

- Effect of Heavy Traffic

  With the SMDR adjunct and printer combination, the printer can use excessive paper and miss call activity during heavy traffic periods. It is recommended that the 9-track tape, 94A LSU (with a 93B CMDR), AP-16, or 3B2 versions be used in systems with heavy traffic.

Extension Number Steering

The call record shows calls to data ports (DCA or DCP) and calls to Main/Satellite locations over Main/Satellite trunks. When these calls are placed using Extension Number Steering, the call record shows both the dialed extension number and the dial access code of the associated trunk group.

Five-Digit Dialing

For systems using 5-digit dialing plans, the extension number is truncated by suppressing the leading digit on the SMDR output (either direct output or 9-track tape). For example if the extension number being recorded is 64221, the SMDR output shows 4221 and the leading digit ‘‘6’’ is not shown. For prefix type 5-digit dialing, this should prove no particular problem. SMDR was designed before a 5-digit dialing plan was used or needed. CMDR and VFCDR support expanded digit dialing plans. See the Extension Number Portability and the DCS features for more information on 5-digit dialing plans.

Memory Overload

Overload of memory can cause the output of partial records.

Multiple Records on Network Calls

In a network environment where the SMDR feature is used on multiple nodes, the same call is recorded separately on each node where a recordable trunk circuit is used.

Power Failure Protection

The power reserve circuit pack (LC38), located in the SMDR cabinet, provides a limited power backup for memory circuits in the event of a power failure. This power reserve enables the SMDR memory to hold call data for about 7 hours and allows the clock and calendar, located on the front of the cabinet, to continue to run (without display).

---

* Registered trademark of Sykes Datatronics, Inc.

Call data for calls made during a power failure is not recorded. If the duration of a power failure is less than 7 hours, the call data retained in memory should be valid. However, if a power failure lasts longer than 7 hours, the clock and calendar stops, and call data stored in the SMDR memory either be lost or cannot be assumed to be valid.

SMDR Port

The SMDR port can be administered as an eighth CMDR/NCOSS port for improved processing speed.

SMDR Testing

The call records are not recorded during the execution of the SMDR link-test procedure. This link test prevents the CDR network from outputting records to the SMDR port.

Unsuccessful Call Records

Incoming calls and outgoing AAR or ARS calls that are not completed for any reason (unsuccessful calls) can be recorded as such by SMDR, depending on system translations. If the system is translated for ineffective call recording (see Feature Administration), unsuccessful calls will appear in the call record as Condition Code N (for direct printer output) or E (on 9-track tape records). Outgoing AAR or ARS calls that are unsuccessful will appear as Condition Code N or E, or either F or O in the case of insufficient FRL. If ineffective call recording is not administered, unsuccessful calls will not be identifiable as such. An unsuccessful call can result from any of the following:

- All trunks are busy and no queuing exists, or all queue slots are busy.
- The call queues but never completes because the caller either cancels the call (hangs up), or the call remains in queue for the maximum time allowed and is released by the system.
- The FRL is not high enough to allow access to an available route in the route list.
- The caller dials the toll-restricted access code, and only toll routes are available.
- An incoming call is placed to an unavailable (busy or unassigned) terminal.

Variable Call Completion Thresholds

The system scans each SMDR call once every 6 seconds. The call duration timer is normally started as soon as an SMDR call is found to be active (resulting in a timing accuracy limit of 6 seconds). This helps compensate for time spent waiting for the far end of a call to answer. Users can increase the delay time (before the call duration counter is started) by administering a start timer that delays starting the duration time by up to 99 seconds. This can be done on an individual trunk group basis and on a system basis. The individual trunk group setting takes precedence if used.

INTERACTIONS WITH OTHER FEATURES

The following System 85 features affect or are affected by the operation of the SMDR feature.

Abbreviated Dialing

Outgoing calls are recorded by this feature as though they were manually dialed.

Advanced Private Line Termination

— Incoming Tie Trunk Calls

If a calling party dials an account code and then calls across a tie trunk to an attendant on another network node, the account code is recorded only at the originating node. The attendant at the terminating node can enter the account code, as requested by the caller, to record the account code at the terminating node.

— Outgoing Tie Trunk Calls

If a calling party dials an SMDR account code and then calls the attendant, the account code is dropped. However, the attendant can reenter the account code before extending the call across the tie trunk.

AAR (Automatic Alternate Routing)

Valid account codes are required for trunk groups within an AAR pattern that have FEAC (Forced Entry of Account Codes) applied to them. FEAC within an AAR pattern must be administered on a trunk group basis. Any trunk groups within an AAR pattern that do not have FEAC applied to them are skipped during route selection. However, if an invalid account code is dialed, none of the trunk groups are accessed, and intercept tone is heard.

Automatic Route Selection

If terminal class of service or system class of service require an account code (FEAC active) and a code is not dialed, ARS will route the call attempts to intercept treatment. If a FEAC trunk group appears in a routing pattern and the account code has not been dialed, ARS will skip that trunk group.

Attendant Call Waiting

The SMDR records the called extension number, as well as the account code (if dialed) for attendant-assisted incoming calls using the Attendant Call Waiting feature.

ACD (Automatic Call Distribution)

The extension number of the answering agent in an ACD call is recorded by SMDR as the called number, rather than the split LDN (listed directory number).

Call Forwarding—Busy and Don't Answer

The call record shows the extension number that the Call Forwarding—Busy and Don't Answer feature directed the call to as the called number.

If a user establishes call forwarding outside, other users may attempt to call that extension and be routed over facilities which they might not have permission to access without an account code (because of FEAC). The callers would dial the extension number and be denied without a clear indication of why.

A terminal whose class of service requires an account code (administered through FEAC) entry, is denied the ability to set up call forwarding off the switch in other than a DCS (Distributed Communications System) environment (only to terminal extensions within the DCS).

If the system class of service requires an account code (administered through FEAC), all forwarding outside will not be permitted through the ARS feature.

Call Forwarding—Don't Answer

The call record shows the forwarded to extension number as the called number for the Call Forwarding—Don't Answer feature. Refer to the Call Forwarding—Busy and Don't Answer interaction for details on FEAC interactions.

Call Forwarding—Follow Me

The call record shows the forwarded to extension number as the called number for the Call Forwarding—Follow Me feature. Refer to the Call Forwarding—Busy and Don't Answer interaction for details on FEAC interactions.

Call Park

The final destination voice terminal in a Call Park connection is recorded by SMDR as the called number.

Call Pickup

The terminal using Call Pickup (the terminal that actually answered the call) is recorded by SMDR as the called number.

CDRR (Call Detail Recording and Reporting)

The CDRR, SMDR, CMDR, and VFCDR features are compatible. All use the same switch data base record. The SMDR feature uses a 15-word output that is the same as the first 15 words of the 18-word output used for CMDR. If SMDR is used on the same switch with a CMDR Interface, the number of LSUs available for CMDR purposes is limited to seven. If SMDR is not used, eight LSUs can be attached.

Conference—Three Party

The CDR records the last voice terminal connected to a 3-party conference call as the called number.

If an established call is extended to a trunk using the conference or transfer features, the following FEAC rule applies: If an account code had already been dialed to establish the original connection, the dialing of a new account code to add the second party will result in two CDR records.

Conference—Attendant Six Party

The attendant can dial the SMDR access and account codes before adding a voice terminal or trunk to a conference. When the codes are dialed, the SMDR records the trunk and voice terminal number as a separate CDR record.

Conference—Three Party

If an account code had already been dialed to establish the original connection, the dialing of the new account code to add the second party will create a new call detail record.

DCA (Data Communications Access)

The System 85 SMDR feature can provide statistical information for DCA calls.

DDC (Direct Department Calling)

The extension number of the answering agent in a DDC call, is recorded by SMDR as the called number, rather than the split's LDN (listed directory number).

EUCD (Enhanced Uniform Call Distribution)

The extension number of the answering agent in a EUCD call is recorded by the CDR record as the called number, rather than the split's LDN (listed directory number).

Host Computer Access

The SMDR feature provides information on and specific identification of data calls, including Host Computer Access calls. This enables managers to allocate resources to meet dynamic needs based on use.

Hunting

The hunted-to extension number (the extension that actually answers the call) is recorded by SMDR as the called number.

Intercept Treatment—Attendant

If an incoming trunk call receives Intercept Treatment and is routed to the attendant, the call record looks as if the attendant had been dialed directly. This interaction occurs regardless of whether recording of ineffective attempts is active or not.

ISN (Information Systems Network) Interface

The SMDR feature provides information on and specific identification of data calls including ISN Interface calls.

Loudspeaker Paging Access

With an incoming call waiting, the attendant can dial the SMDR access and account codes, and then use Loudspeaker Paging Access. The call is recorded by SMDR, but not the page.

Personal Central Office Line

The CDR feature does not record calls made on Personal CO (Central Office) Lines. Personal CO lines are for direct access to the Central Office, and therefore not provided all the features of a PBX terminal extension. FEAC is not applicable to Personal CO lines.

Remote Access

If a Remote Access call terminates in the system or tandems through the system, the call record stores the attendant ID number (DAC), if assigned, for the remote access group. The user can dial a CDR account code after the remote access code. Remote access to the network may require a dialed barrier code or an authorization code. The call record stores a dialed authorization code. If a station receives a call on an incoming trunk and then transfers the call, the station user who received the call will be recorded as the dialed number.

Class-of-service 31 is used to establish the account code forced entry class-of-service option for Remote Access trunks.

Route Advance

The rules for forced account code entry apply to route advance trunk groups as well as the primary trunk group.

If a user has not dialed an account code, trunk groups which require the account code in the route advance list are skipped.

Serial Calls

The call record separately lists each call in a serial call, including call duration.

Trunk Verification

The use of trunk verification by either the attendant or the maintenance terminal(s) does not require an account code entry.

Trunk-to-trunk Connections

Incoming calls from a tie trunk to an outgoing trunk do not require an account code under any circumstances.

Unattended Console Service

Calls routed to a night terminal due to either dialing of the attendant access code or by encountering an intercept situation will require the forced account code as determined by the options set for the night terminal since the call will be processed as a Three Party Conference/Transfer after it has been answered by the night station.

Through Dialing

Whenever the attendant allows Through Dialing by a voice terminal user, the call record shows the call as an attendant-assisted call. If an account code is used, the attendant must dial the account code before dialing the trunk-group access code.

Transfer

The extension number of the final voice terminal connected in a Transfer call is recorded by SMDR as the called number.

UCD (Uniform Call Distribution)

The extension number of the answering agent in a UCD call, is recorded by SMDR as the called number, rather than the split LDN (listed directory number).

RESTRICTING FEATURE USE

The attendant console turns SMDR (switch data base) recording on or off on an individual trunk group basis. Before this can be done, however, trunk groups must first be assigned to the SMDR feature through system administration procedures (described later).

HARDWARE REQUIREMENTS

The SMDR hardware is preassembled and installed as a complete unit. The major hardware components for the SMDR features include the following:

Switch Hardware Required for SMDR Interface

- Data Channel Circuit Pack, TN403. Circuit 15, slot 23, carrier 0 is specifically designated as the direct output port for SMDR.

Port Hardware

- Direct Output—J59209A
  - — Direct output carrier and required circuit packs
  - — Direct output cabinet
  - — 207B power supply.
- 9-Track Tape Unit—J58886H
  - — 9-track tape carrier and required circuit packs
  - — 9-track cabinet
  - — 207B power supply
  - — KS-22077 9-track tape drive
  - — KS-22078 tape formatter unit.
- Supplementary Equipment
  - — TELETYPE* Model 4310 AAC teleprinter or equivalent
  - — COMM-Stor II formatting unit.

A more complete description of the hardware needed to implement the various forms of SMDR is provided in Section 555-100-205 IS, Reference Manual, Station Message Detail Recording (SMDR) System Description. Refer to the CDR Reference Manual, 555-006-202, for more information.

* Registered trademark of AT&T Teletype.

FEATURE ADMINISTRATION

The SMDR feature is assigned on a per-system and on a per-trunk group basis within the system.

The customer can partially administer this feature using the SMT (System Management Terminal) or the TCM (Terminal Change Management) feature. This feature can also be administered using CSM (Centralized System Management).

The applicable MAAP and SMT procedures are as follows.

MAAP AND SMT PROCEDURES —STATION MESSAGE DETAIL REPORTING			
PROCEDURE	**WORD**	**PURPOSE**	**SMT**
000	1	Assigns the voice terminal class of service to an extension number.	No
010	2	Assigns Forced Account Code Entry to a voice terminal class of service.	Yes
101	1	Assigns SMDR Active and variable start timer to reportable trunk groups. This procedure also assigns Forced Account Code Entry for the trunk group (Enter ‘‘2’’ in Field 8).	No
253	—	Assigns TN403 data channels to type 5 for SMDR.	No
275	1	Assigns SMDR to the system class of service, assigns the account code length, and activates recording of calls on incoming trunks. This procedure also assigns Forced Account Code Entry for ARS calls (Enter ‘‘2’’ in Field 12).	Yes
275	3	Administers timing delay (from 0 to 99 seconds in 6-second increments) for the variable start timer. Used for individual trunk groups and the system default.	Yes
285	—	Administers the prefix for the SMDR account numbers.	Yes
286	1	Assigns the recording of ineffective attempts to the network class of service.	Yes
288	1	Performs the REMOVE-EXECUTE function in order to change the CDR record length, opcode indicator and a field to indicate variable or default format. Also specifies record length for SMDR ports.	Yes
350	1	Assigns the first digit of the feature dial access codes.	No
350	2	Assign the SMDR dial access codes. The applicable encodes are as follows: 36 SMDR—Account Number 37 SMDR—Start 38 SMDR—Stop.	No

The following is applicable TCM path name used with the AP 16.

TCM SCREEN — CALL DETAIL AUTOMATIC ACCOUNTING	
PATH NAME	**PURPOSE**
terminal-change system parameters (select the Access-Codes option)	Assigns the SMDR account code length.

The following are the applicable CSM Command Paths utilizing the **admin** area of TCM or FM.

CSM SCREENS — MASKS STATION MESSAGE DETAIL RECORDING		
APPL'N	**OBJECT**	**PURPOSE**
FM	trk-grp	Administers the SMDR Active and variable start timer to reportable trunk groups.
TCM/FM	sys-cos	Assigns data channel(s) for SMDR, and assigns SMDR to the system class of service, assigns the account code length, and activates SMDR recording of calls on incoming trunks. Administers timing delay (from 0 to 99 seconds in 6-second increments) for the variable start timer. (Used for individual trunk groups and the system default). Assigns the SMDR prefix digit, the SMDR message length (either 15 or 18 words), and assigns the recording of ineffective attempts to the network class of service.
TCM/FM	first-digit	Assigns the first digit of the feature dial access codes.
TCM/FM	dial-access-code	Assigns the SMDR dial access codes.

STRAIGHTFORWARD OUTWARD COMPLETION

DESCRIPTION

This feature allows an attendant to complete an outgoing trunk call for a voice terminal user. This feature is used to extend calls under the following circumstances:

- For voice terminals that are outward restricted
- For voice terminals with insufficient FRLs (Facilities Restriction Levels) for the trunks required
- For trunks under attendant control.

By completing outgoing calls, the attendant can screen calls and control their destinations.

Feature History and Development

This feature was first available on System 85 in Release 1. There have been no changes to this feature since Release 1.

USER OPERATIONS

The following are the user operating procedures for this feature.

To Extend a Call

With a DTGS (Direct Trunk Group Selection) button:

- Be sure a call is at the attendant console. [A 2-way connection is established, the ATND lamp is lit, and the ICI display shows the extension number.]
- Press the appropriate DTGS button. [The call is split away from the attendant, the ANS and SPLIT lamps light, and dial tone is heard.]
- Dial the destination number. [Ringback tone]
- Press RELEASE. [ATND, ANS, and SPLIT lamps go dark. The calling voice terminal hears ringback tone.]

Without a DTGS button:

- Be sure a call is at the attendant console. [A 2-way connection is established, the ATND lamp is lit, and the ICI display shows the extension number.]
- Press START. [The calling voice terminal is split away from the attendant, the SPLIT lamp lights, and dial tone is heard.]
- Dial the desired trunk group access code. [The ANS lamp lights, and second dial tone is heard.]
- Dial the destination extension number. [Ringback tone]
- Press RELEASE. [ATND, ANS, and SPLIT lamps go out. The caller hears ringback tone.]

To Release From a Call When Ringback Tone Is Not Heard:

- Press CANC. [Attendant is reconnected to calling voice terminal. The SPLIT lamp goes out.]
- Inform the calling voice terminal user that the call was not completed.
- Press RELEASE. [Call is disconnected. The ANS and ATND lamps go out.]

CONSIDERATIONS

Through Dialing and Straightforward Outward Completion

The Through Dialing feature is similar to the Straightforward Outward Completion feature. Using Through Dialing, the attendant presses the RELEASE button after hearing second dial tone. At this time, the calling party (instead of the attendant) dials the desired number.

INTERACTIONS WITH OTHER FEATURES

The following System 85 features affect or are affected by the operation of this feature.

Restriction—Attendant Control of Voice Terminals

Straightforward Outward Completion bypasses Controlled Outward Restriction.

Restriction—Code Restriction

Straightforward Outward Completion bypasses Code Restriction.

Restriction—Miscellaneous Trunks Restrictions

Straightforward Outward Completion bypasses Miscellaneous Trunk Restrictions.

Restriction—Toll Restriction

Straightforward Outward Completion bypasses Toll Restriction.

Restriction—Voice Terminal Restrictions

Straightforward Outward Completion bypasses Outward Restriction.

Tenant Services

The Straightforward Outward Completion feature generally allows an attendant to complete outgoing calls for a voice terminal user in the switch. However, in a partitioned System 85, this operation is controlled. If an attendant (in a partition other than Partition 0) tries to place a call over a trunk that partitioning would not allow the voice terminal user to access, the switch returns intercept treatment to the attendant.

An attendant in Partition 0 can place outgoing calls over any trunk for voice terminal users in any partition. When these attendants press the RELEASE button after making an outgoing connection, the outgoing call is left intact.

HARDWARE REQUIREMENTS

None.

FEATURE ADMINISTRATION

Straightforward Outward Completion is automatically provided on every switch. Feature assignment or administration is not required.

TENANT SERVICES

DESCRIPTION

The Tenant Services feature allows a large System 85 to appear to users of the switch as many small, independent switches. This capability allows a single large System 85 to be shared among a wide assortment of user groups (referred to as ''tenants''). A System 85 configured as a ''partitioned switch'' can appropriately serve the telecommunications needs of several situations:

- Major airports
- Industrial parks
- Large medical centers
- Large office complexes.

Tenant Perspective

From a tenant's perspective, the cost advantages of the Tenant Services feature can be significant. A small to medium sized tenant may choose to locate their business in a building with Tenant Services to benefit from the enhanced features of a large switching system (e.g., Automatic Route Selection, Message Center, and AUDIX) at a relatively modest cost.

Additional cost advantages can be realized by the tenant. In a Tenant Services arrangement, tenants have access to a single centralized source (the shared System Manager) for assistance with their telecommunications needs. With Tenant Services, many tenants would no longer need their own telecommunications experts or the services of outside consultants.

Owner Perspective

From the perspective of a building owner or developer, the Tenant Services feature can serve as an attraction to prospective tenants. When shared telecommunications services are provided effectively, the owner can benefit through higher occupancy rates. Shared telecommunications services become a natural extension to utilities (e.g., water, electricity, and gas) that are already provided to tenants from a common point of access.

In some locations, where permitted by the Public Utilities Commission, managing a shared switch can also provide a source of direct revenue for the owner.

Feature History and Development

This feature is first generally available for System 85 in Release 2, Version 4.

Extension Partitions in the Tenant Services Environment

An extension partition may contain one or more extensions. However, each extension number can only be assigned to one extension partition. The partitioning itself is based on extension numbers: not on appearances, images, or equipment locations. A partitioned System 85 can contain as many as 1000 extension partitions, numbered 0 to 999.

Voice terminal call origination.

A voice terminal user (in a partition other than Extension Partition 0) is allowed to place calls (using an extension number) to any voice terminal residing in the same extension partition or in Extension Partition 0. If the user tries to place a call (using an extension number) to a voice terminal residing in any other extension partition, the switch returns intercept treatment to the user.

NOTE: These voice terminal users can always dial the appropriate dial access code and 7-digit number to place calls to voice terminals in other extension partitions.

A voice terminal user in Extension Partition 0 is allowed to place calls (using an extension number) to any extension in the switch.

NOTE: The IPA (Interpartition Access) feature can be used in conjunction with the Tenant Services feature to allow calling between extension partitions. For more information, refer to the Interpartition Access section of this manual.

Attendant Partitions in the Tenant Services Environment

An attendant partition may contain one or more attendant consoles. Each console (except consoles in Attendant Partition 0) can be a member of more than one attendant partition. A partitioned System 85 can contain as many as 40 attendant consoles residing in as many as 41 attendant partitions, numbered 0 to 40.

Attendant call origination.

An attendant (in a partition other than Attendant Partition 0) is allowed to place direct calls (using an extension number) to any voice terminal residing in an extension partition that is assigned to the attendant's partition. If the attendant tries to place a direct call (using an extension number) to a voice terminal residing in any other extension partition, the switch returns intercept treatment to the attendant.

NOTE: These attendants can always access the appropriate trunk group and dial the appropriate 7-digit number to place direct calls or extend calls to voice terminals in these other partitions.

An attendant in Attendant Partition 0 is allowed to place direct calls (using an extension number) to any extension in the switch.

An attendant (in a partition other than Attendant Partition 0) is allowed to place direct outgoing calls over any trunk that is assigned to the attendant's partition. If the attendant tries to place a direct outgoing call over any other trunk group, the switch returns intercept treatment to the attendant.

An attendant in Attendant Partition 0 is allowed to place direct outgoing calls over any trunk in the switch.

If a call (from an extension partition other than Extension Partition 0) is active on a console loop, the attendant is allowed to extend the call to another extension in the same extension partition or to an extension in Extension Partition 0. The attendant can also extend the call over a trunk group to which the extension's partition would otherwise have access.

If an outside call is active on a console loop, the attendant is allowed to extend the call to an extension in an extension partition assigned to the attendant's partition. Also, the attendant is allowed to extend the call over any outgoing trunk group that is assigned to the attendant's partition.

Operation of the attendant queue.

One *common* attendant queue serves every attendant partition. However, the number of calls waiting to be answered by an attendant partition *is separately determined* for each attendant partition.

As is done for an unpartitioned switch, the Calls Waiting Level is assigned for the entire partitioned switch in Procedure 200, Word 1. Using a partitioned switch, this level sets the threshold of calls waiting in the shared queue for each attendant partition before the Call Waiting lamp will flash on that partition's console(s). However, if a console is a member of more than one attendant partition, that console's lamp would not flash until all of the console's partitions had exceeded the threshold. As an example, a partitioned switch has three attendant partitions: 1, 2, and 3. The Calls Waiting Level is set to ''4'' for every partition in Procedure 200, Word 1. Partition 1 has two consoles: A and B. Console B is also the only member of Partition 2. Console C is the only member of Partition 3. Currently, there are 11 calls in the shared queue: 5 calls for Partition 1, 2 calls for Partition 2, and 4 calls for Partition 3. At this time, only Console A's Call Waiting lamp is flashing. Console B's lamp would flash if 3 more calls entered the shared queue for Partition 2, and Console C's lamp would flash if one more call entered the queue for Partition 3.

Figure 109-1 shows the basic partitioning concepts for System 85. The double arrows in the figure represent the lines of access between partitions. In fact, *every arrow* in the figure is intended to convey a double arrow. Those arrows that appear as ''single arrows'' should be imagined to *pass behind* the attendant partition and connect with the ''single arrow'' on the opposite side of the partition (forming a double arrow between Partition 0 and each extension partition).

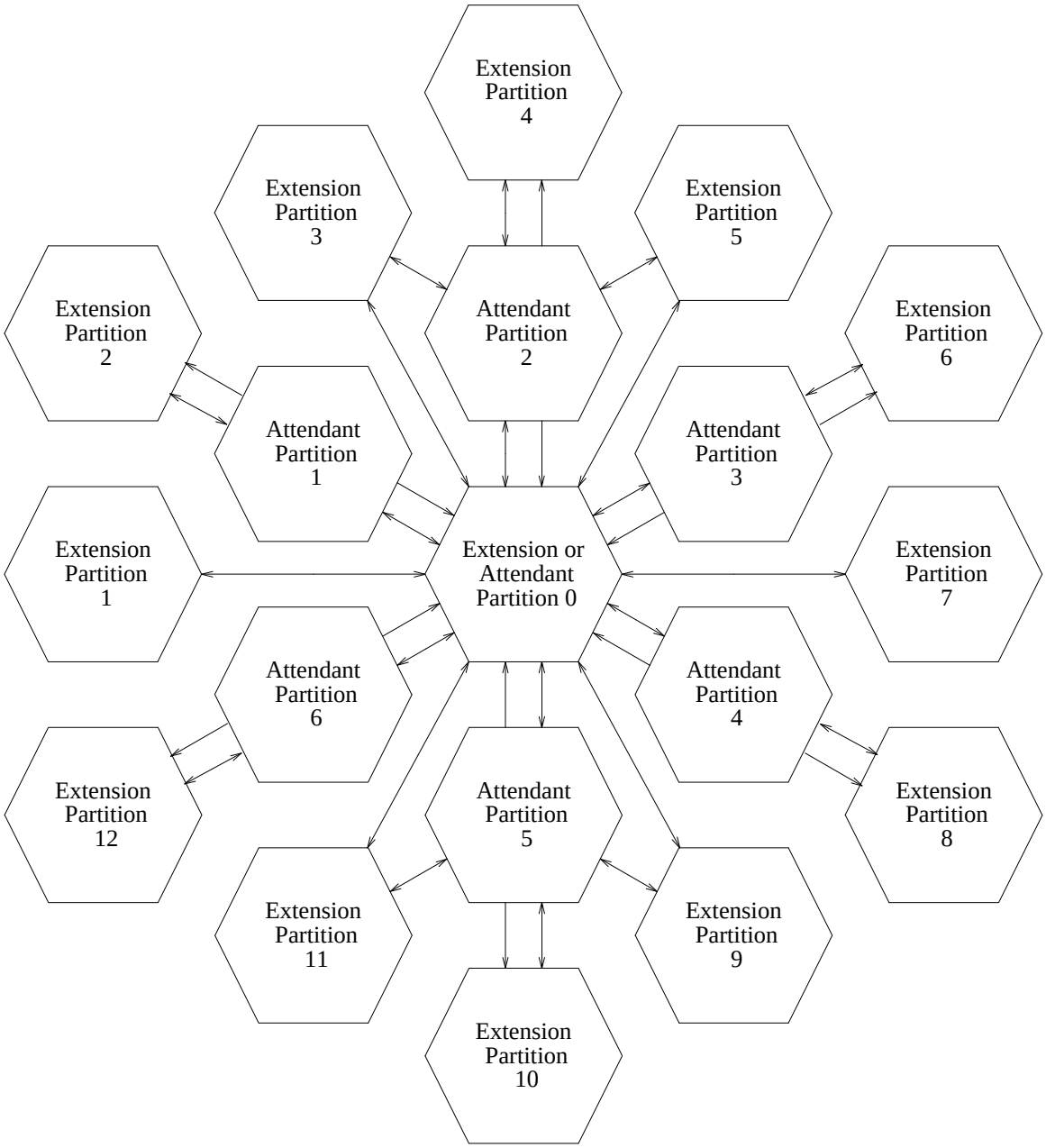

Figure 109-1. Basic Partitioning Concepts

UNATTENDED CONSOLE SERVICE IN A PARTITIONED SWITCH

The Unattended Console Service features have been partitioned as part of the Tenant Services feature. Under this partitioning arrangement, attendant partitions are marked for treatment by the Unattended Console Service features.

General Operation

When a call enters the attendant queue, the switch determines which attendant partition the call should be routed to. If that attendant partition has activated Unattended Console Service, the call is routed to the appropriate night terminal. The algorithm that the switch follows to distribute these calls is similar (but not identical) to the algorithm used for regular Unattended Console Service. The ordered sequence of checks follows.

1. If an incoming call is from over a trunk and that trunk is assigned to a night terminal, the call is handled by trunk-to-terminal processing for that terminal. (Partitioning checks are not performed by the call processing software. These trunk-to-terminal associations should be carefully administered in Procedure 116, Word 1 and Procedure 150.)
2. If a trunk-to-terminal association *has not been assigned*, the call is handled by processing for the called attendant partition's common night terminal. (The common night terminal is entered by the partition's controlling attendant.)
3. If the common night terminal has not been entered, the call is handled by processing for the called attendant partition's default night terminal. (The default night terminal is assigned in Procedure 270, Word 3.)
4. If an *available* night terminal is not found (in Steps 1, 2, or 3), the call routes to the system-wide CAAVT queue (if assigned).
5. If CAAVT is assigned, the call enters the system-wide CAAVT queue. If not, the call remains in the attendant queue, and the switch periodically repeats the sequence of checks.

Controlling Attendant Console

One specific attendant console, the ''controlling attendant console,'' in each attendant partition (except Attendant Partition 0) has special abilities in the attendant partition. The controlling attendant is allowed to activate and deactivate Unattended Console Service for the partition. The controlling attendant is also allowed to assign the common night terminal, or perform the ''clear all terminals'' function for the partition. If an attendant tries to perform these functions from any other console in the partition, the switch returns intercept treatment to the attendant.

The controlling attendant console for each partition is assigned by the system manager in Procedure 210, Word 2. (One attendant console can serve as the controlling console for more than one attendant partition, but each attendant partition can only have one controlling console.)

UNA (Position Unattended) Button and Lamp

The operation of the UNA button is limited for consoles in a partitioned switch. This button can only be used to activate or deactivate Unattended Console Service when the meaning of a button press is certain. If the console involved is allowed to activate Unattended Console Service for more than one attendant partition, pressing the UNA button is ignored by the switch. (In this case, the access code must be used for activation or deactivation of Unattended Console Service.)

The UNA lamp lights steadily on an attendant console whenever Unattended Console Service is active for all of the console's attendant partitions. As an example, a particular console belongs to Attendant Partitions 1, 2, and 3. Unattended Console Service is presently active for Partitions 1 and 2. However, this console can still answer calls directed to Partition 3. So, the UNA lamp on this console would remain unlit until Partition 3 also activates Unattended Console Service. As a result, when Unattended Console Service is activated for an attendant partition, the UNA lamp may not light on every console belonging to that partition.

Attendants in Attendant Partition 0

Every attendant in Attendant Partition 0 has full Unattended Console Service capabilities. These attendants are allowed to activate, deactivate, and control Unattended Console Service for any attendant partition in the switch.

In addition, an attendant in Partition 0 can activate or deactivate Unattended Console Service for the entire switch by dialing the fictitious partition number ''99'' during the activation/deactivation process.

These consoles have similar UNA button and lamp operations as previously described for consoles in other partitions. For example, since an attendant assigned to Partition 0 *cannot also belong to another* attendant partition, pressing the UNA button on that console activates or deactivates Unattended Console Service for Partition 0.

ATTENDANT OVERFLOW

An attendant partition contains one or more attendant consoles that have been assigned to the partition by the system manager. For general call handling, the call waiting lamp lights on the partition's console(s) when every attendant in the partition is busy, and when a new call for the partition is received.

The attendant overflow function of the Tenant Services feature can provide an alternate operation. In cases where every attendant in a partition is busy, subsequent calls can overflow to another attendant partition (called an ''overflow partition'') instead of waiting on the originally called partition.

Attendant overflow can also operate when every attendant console in a partition is in the POSITION BUSY condition.

In Procedure 270, Word 2, the system manager can select one of the following conditions for triggering overflow. These conditions are assigned on a per-attendant partition basis.

1. No overflow (default).
2. Overflow when every attendant in the partition has the handset (or headset) removed *or* is in the POSITION BUSY condition.
3. Overflow when every attendant in the partition has the handset (or headset) removed, is in the POSITION BUSY condition, *or* is using all six of the console's switched loops.

> **NOTE:** Attendant overflow and overflow destinations cannot be assigned to Attendant Partition 0. However, Attendant Partition 0 can be assigned as the overflow destination for another attendant partition.

Overflow Chains

When attendant overflow occurs, System 85 call-processing software allows as many as two ''links'' in an overflow ''chain.'' As an example, Attendant Partition 2 is assigned to overflow to Attendant Partition 5. Meanwhile, Attendant Partition 5 is assigned to overflow to Attendant Partition 9. During periods when Partitions 2 and 5 are quite busy, an incoming call to Partition 2 can overflow to Partition 5, and then, in turn, overflow to Partition 9. If, Attendant Partition 9 is also busy, the call will wait on Attendant Partition 9 (the most recently checked attendant partition).

ARS (Automatic Route Selection) in a Partitioned Switch

Figure 109-2 is a simplified picture of partitioned ARS routing. Partitioned ARS provides more flexible access to the 64 ARS patterns. Several attributes of this figure are worth some discussion.

- *More than one* extension partition can route ARS calls via the *same* call category.
- Each call category points to 64 ''routing designators'' that correspond to the dialed digits (the way *ARS patterns* do in an unpartitioned System 85).
- In turn, each routing designator points to a ''pattern'' that has not been previously assigned to that call category's routing designator.

> **NOTE:** The routing designators for Call Category 0 are all pointing to patterns with the *same* numbers. This is all right. In fact, this relationship is the *default* for unpartitioned switches. However, if desired, the relationship can be assigned differently.

- Each pattern can have up to 16 ''preferences'' (as shown for Pattern 2). These preferences are really trunk groups arranged in descending order of desirability.
- Patterns 10, 20, and 64 each contain three preferences: Trunk Groups 18, 36, and 40. But, these three preferences are arranged in a different order for each pattern. This type of arrangement is where some of the increased ARS flexibility resides. In this way, when these trunk groups are shared, *different* extension partitions can access the *same* trunk groups in different preferential orders.

However, a more basic flexibility is derived from another attribute of this routing scheme. As shown in the drawing, *different* extension partitions can access *different* ARS patterns even though the *same* public-network digits are dialed.

> **NOTE:** Patterns can also have trunk groups that are not assigned to other patterns. But, this arrangement is not shown in this figure.

- An extension partition does not need to be allowed use of every trunk group in every pattern that the partition can use. A partitioned System 85 checks the trunk group/partition assignments individually within each pattern.

  Whenever a partition's voice terminal cannot use a trunk group in these patterns, the trunk group is skipped by the ARS/Tenant Services software. If the voice terminal cannot access any of the trunk groups, the switch denies the call with Intercept Treatment.

- The ARS routing in Figure 109-2 is based on 3-digit NXXs. This is *not* a limitation of partitioned ARS routing. Rather, the drawing shows 3-digit NXXs for simplicity. The partitioned ARS software can also screen 3-digit NPAs and 6-digit NPA-NXXs.

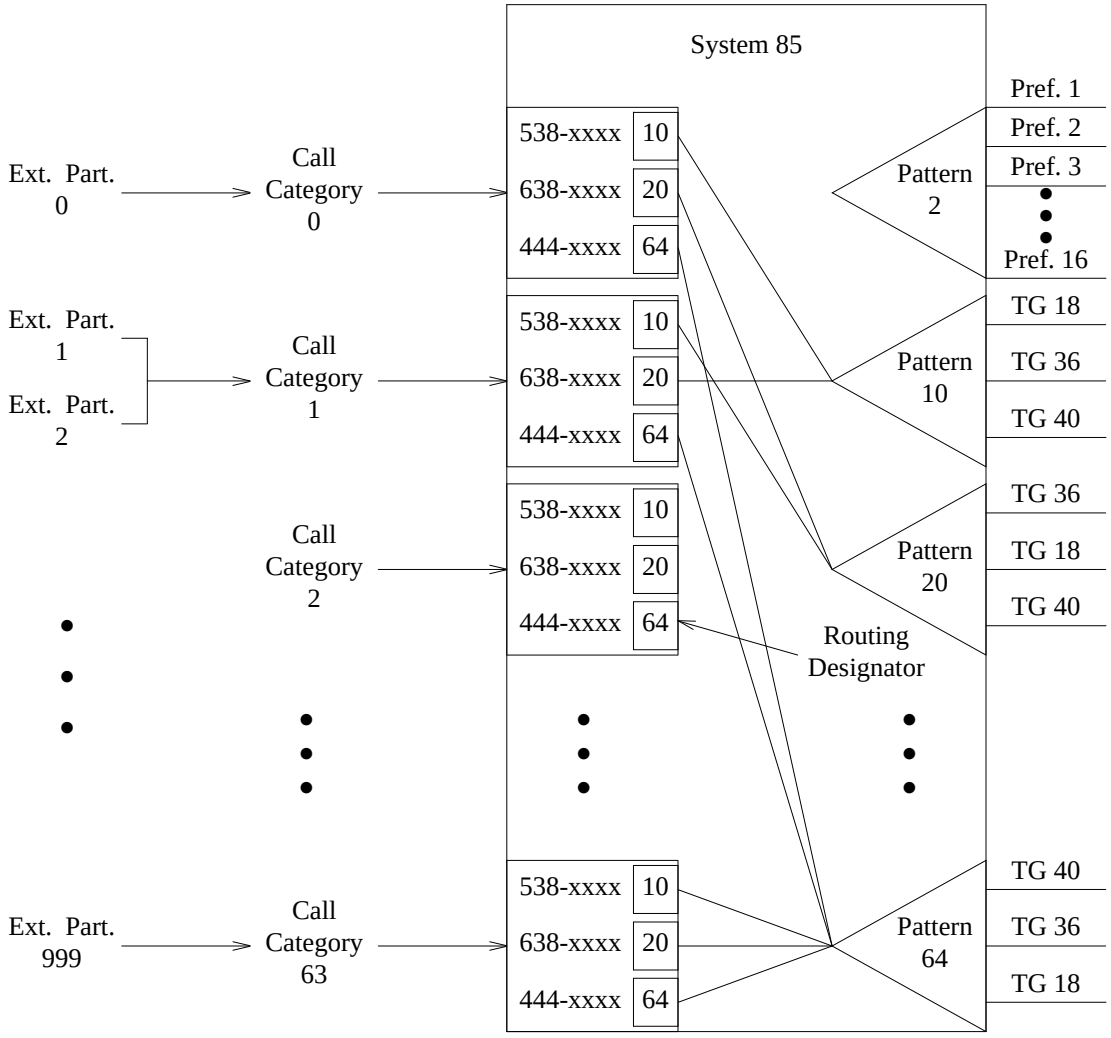

Figure 109-2. ARS Routing in the Tenant Services Environment

USER OPERATIONS

The following are the user operating procedures for this feature.

To Activate Unattended Console Service for Every Partition

— An attendant in Partition 0 should:

- Press an idle loop button. [PA lamp goes out.]
- Press the START button. [Dial tone]
- Dial the Activate Unattended Console Service access code. [Second dial tone]
- Dial the fictitious partition number ‘‘99.’’ [The switch returns confirmation tone, and the UNA lamp lights on every console.]
- Press the RELEASE button.

To Deactivate Unattended Console Service for Every Partition

— An attendant in Partition 0 should:

- Press an idle loop button.
- Press the START button. [Dial tone]
- Dial the Deactivate Unattended Console Service access code. [Second dial tone]
- Dial the fictitious partition number ‘‘99.’’ [The switch returns confirmation tone, and the UNA lamp goes out on every console.]
- Press the RELEASE button. [PA lamp lights.]

To Activate Unattended Console Service for a Partition

— The partition’s controlling attendant should:

- Press an idle loop button. [PA lamp goes out.]
- Press the START button. [Dial tone]
- Dial the Activate Unattended Console Service access code. [Second dial tone]
- Dial the appropriate partition number (e.g, ‘‘09’’). [Confirmation tone]
- Press the RELEASE button. [If the attendant is associated with another ‘‘attended’’ attendant partition, PA lamp lights.]

NOTE: Any attendant in Partition 0 can perform this operation for any attendant partition in the switch.

To Deactivate Unattended Console Service for a Partition

— The partition's controlling attendant should:

- Press an idle loop button. [PA lamp goes out.]
- Press the START button. [Dial tone]
- Dial the Deactivate Unattended Console Service access code. [Second dial tone]
- Dial the appropriate partition number (e.g., ''40''). [Confirmation tone]
- Press the RELEASE button. [PA lamp lights.]

NOTE: Any attendant in Partition 0 can perform this operation for any attendant partition in the switch.

To Activate Unattended Console Service for a Partition Using the UNA Button

— The partition's controlling attendant (who is a member of only one attendant partition) should:

- Press the UNA button. [UNA lamp lights, and PA lamp goes out.]

NOTE: An attendant in Partition 0 can perform this operation for Partition 0.

To Deactivate Unattended Console Service for a Partition Using the UNA Button

— The partition's controlling attendant (who is a member of only one attendant partition) should:

- Press the UNA button. [UNA lamp goes out, and PA lamp lights.]

NOTE: An attendant in Partition 0 can perform this operation for Partition 0.

CONSIDERATIONS

Switch Capacities

A single System 85 can contain as many as 1000 Extension Partitions, 41 Attendant Partitions, and 999 trunk groups. From these 999 trunk groups, as many as 982 trunk groups can be dedicated to or shared by tenants.

Legal Considerations

Laws governing the use of shared telecommunications services vary in different locations, and are subject to change. It is the responsibility of the System Manager to understand and comply with the applicable regulations.

Partitioned Trunk Types

Partitioned trunk groups can be dedicated for use by a single partition or shared by several partitions. Most trunk groups with commonly used trunk types can be partitioned. The trunk-type encodes that allow for partitioning include:

- 12 to 50 (APLT, CO, FX, WATS, DID, Tie, and Remote Access trunks)
- 70 to 78 (Special tie trunks)
- 103 to 109 (PDM, TDM, AP 32 DCPI, EIA, ISN, and DMI trunks)
- 120 (ISDN Dynamic trunks).

Trunk groups that are not included here cannot be partitioned. These unpartitionable trunk groups are *equally accessible* to any user in the switch.

Trunk-to-Trunk Partitioning

When an incoming trunk call is connected to an outgoing trunk, a partitioned System 85 does not check the Tenant Services permissions. Primarily for this reason, a partitioned System 85 should not:

- Serve as a tandem node in an ETN or DCS network.
- Serve as the main in a Main/Satellite/Tributary arrangement.
- Serve as a branch location in a CAS (Centralized Attendant Service) arrangement.
- Route data calls from incoming trunk groups to host computers over outgoing trunk groups.

However, System 85 can check Tenant Services permissions for trunk-to-trunk connections involving Remote Access trunks. These checks are applied when an authorization code is required to access the switch (see the Remote Access interaction).

Extension Number Steering

Extension number steering is partially compatible with the Tenant Services feature. When a local voice terminal dials an extension number that steers to a trunk-group dial access code, the partitioning checks are made after the software converts the extension number to the dial access code. (This operation allows voice terminal users at a satellite location to dial extension numbers that steer to the main location. Or, internal users can dial extension numbers that steer to data trunk groups.)

However, calls arriving over incoming trunk groups are treated differently. When an outside caller dials a System 85 extension number that steers to an outgoing trunk-group dial access code, the partitioning checks are not performed. Therefore, Extension Number Steering does not provide a limited form of trunk-to-trunk partitioning.

Originating Registers

Originating registers for outgoing calls are not partitioned. These registers are a system resource, and are provided to users on an ‘‘as needed’’ basis. As a result, members of a partition can experience dial tone delays during periods when another partition is heavily engaged in placing outgoing calls.

Dial Access Codes

The feature dial access codes for a partitioned System 85 are assigned on a system-wide basis. So, for example, the Automatic Callback or the Leave Word Calling dial access code is dialed using the same digits from every partition in the switch. By default, any voice terminal user can access any administered switch feature (either intentionally or inadvertently) by dialing the correct digits. Therefore, when the system manager desires to limit access to features, appropriate restrictions should be *positively administered* whenever possible. If certain features cannot be specifically restricted, the system manager should be careful not to publicize the access codes to those users for whom the features are not intended.

Voice Terminal Classes of Service

An R2 V4 System 85 provides 63 classes of service that are shared by the tenants in a partitioned switch.

Class-of-Service 31 is applied to every Remote Access user.

Numbering Plan

The numbering plan for System 85 is assigned on a system-wide basis. 3-, 4-, and 5-digit extension numbers cannot coexist on the same switch. Therefore, the extension numbers in every extension partition must contain the same number of digits. (The Flexible Numbering feature is not available on System 85.)

Multiple Extensions on Multiappearance Voice Terminals

Typically, every extension number on a multiappearance voice terminal should belong to the same extension partition. However, there are no tests in the administration software to prevent assigning extensions from different partitions to the same multiappearance terminal. So, if this capability proves useful, the administration can be performed. However, it is the responsibility of the system manager to ensure that extensions in a partitioned switch are assigned properly.

Separate Directories for Each Partition

The manager of a partitioned switch should provide a separate telephone directory for each partition in the partitioned switch. The directory for each partition should contain only the extension numbers, attendant number(s), and dial access codes that users in that partition are allowed to dial. Providing separate directories for each partition would serve to minimize confusion for users, and would also increase the users' perceptions of being served by their ''own'' switch.

Voice-Terminal Display Area and Training Facility

The manager of a partitioned switch can provide a facility where the variety of voice terminals are displayed and demonstrated. Using such a facility, prospective tenants can see this equipment first-hand, acquire a better concept of the available choices, and actually learn to use the equipment.

Two Partitions for the System Manager's Organization

For many applications of shared telecommunications, the system manager and colleagues are employees of a larger organization. In many instances, it would be inappropriate to place the entire organization in Partition(s) 0. Usually, the rest of the organization can be assigned to Partition(s) 1. In this way, there is still communication between the system-management group and larger organization, but the rest of the organization is *functionally separated* from other tenant organizations. This separation provides the expected privacy, perhaps ''autonomy,'' (e.g., from service observing, agent override, Override, and Busy Verification of Lines) for the individual users in the rest of the organization.

Recent-Disconnect Announcements and Call Vectoring

Multiple ‘‘recent-disconnect’’ announcements can be desirable for a partitioned switch (i.e., ‘‘You have reached an unworking number of the _____ Corporation.’’). When Call Vectoring is used on a partitioned switch, as many as 84 different recent-disconnect announcements can be provided.

Whenever a voice terminal is taken out of service, the voice terminal can be removed using Procedure 001, Word 1 or Procedure 052, Word 1. Once the voice terminal is removed, the extension number is temporarily assigned as a VDN (in Procedure 000, Word 1) that points to a specific partition’s ‘‘recent-disconnect’’ vector (Procedure 031, Word 1). Each recent-disconnect vector would contain a single ‘‘forced disconnect with announcement’’ step that *specifies* the actual tenant called, and provides that tenant’s LDN (e.g., ‘‘You have reached an unworking number of the Jericho Company. For assistance, please call 737-2100.’’)

Call Coverage to the Shared Attendant Queue

Call Vectoring can also redirect coverage calls to the attendant queue. Attendant coverage can be beneficial for some System 85s. Using this coverage, the attendant group can serve as the final coverage point for an assortment of principals.

A VDN can be assigned as the final point in a coverage path. One of these VDNs can be assigned to a vector with a single ‘‘route to’’ step. The ‘‘route to’’ step within this coverage vector contains an Abbreviated Dialing list item that outpulses the attendant dial access code [usually ‘‘0,’’ or a DID LDN (Listed Directory Number)].

Since ‘‘route to’’ steps can direct calls to DID LDNs, partitioned switches can also cover to the *shared* attendant queue. Each extension partition desiring attendant coverage can have a vector that directs calls to the LDN for the attendant partition assigned to that extension partition. In this way, attendant coverage is a partitioned function of the Tenant Services environment.

INTERACTIONS WITH OTHER FEATURES

Abbreviated Dialing

Abbreviated Dialing list items are not checked for legality at the time they are entered. Illegal list items are accepted into the list, but calls to these illegal numbers are denied when the digits are outpulsed by the switch. When a user attempts to use Abbreviated Dialing to place a call over another partition’s trunk group or to an extension in another partition, the switch returns intercept treatment to the calling party.

A voice terminal user from any partition can be allowed to access the system list, but the switch will only allow completion of calls that are consistent with the dialing capability of that user’s partition.

Each partition can have a group list that every voice terminal user in the partition can access. This would provide the equivalent of the system list on a per-partition basis. Again, the switch will deny calls using list items that are not consistent with a partition’s dialing capabilities.

Attendant Call Waiting

System 85 allows attendant calls to wait on local voice terminals, and always provides 2-burst tone for the called voice terminal. When allowed, 2-burst tone is provided for attendant calls directed to a voice terminal using the extension number. When allowed, 2-burst tone is also provided for attendant calls directed to a voice terminal using DXS (Direct Extension Selection).

Attendant DXS (Direct Extension Selection) With BLF (Busy Lamp Field)

Assignment of DXS or Extended DXS is on a system-wide basis. Every attendant in a partitioned System 85 is provided with the complete set of DXS buttons and the associated BLF lamps. The BLF lamps are updated on every attendant console, but attendant calling is limited by the Tenant Services feature.

An attendant (in a partition other than Attendant Partition 0) is allowed to use DXS or Extended DXS to call a voice terminal in any partition that the attendant can call using the touch-tone dialing pad. When an attendant attempts to call a voice terminal in a partition that is not allowed by partitioning, the switch returns intercept treatment to the attendant.

An attendant in Attendant Partition 0 is allowed to use DXS or Extended DXS to call any voice terminal in the switch.

Attendant Direct Trunk Group Selection

Assignment of Attendant Direct Trunk Group Selection is on a system-wide basis. Every attendant console in a partitioned System 85 is provided with the complete set of 24 DTGS buttons and the associated lamps. However, the Tenant Services feature limits the use of these buttons. Also, the switch only updates the lamps associated with a specific button for consoles that can access that button's trunk group.

An attendant (in a partition other than Attendant Partition 0) is allowed to use the DTGS feature to access any trunk group that the attendant can access by dialing the trunk-group access code. When an attendant tries to select a trunk group that is not allowed by partitioning, the switch returns intercept treatment to the attendant.

An attendant in Attendant Partition 0 is allowed to use every DTGS button on the attendant console. Also, the switch updates the lamps associated with every DTGS button on these consoles.

Attendant Control of Trunk Group Access

An attendant (in a partition other than Attendant Partition 0) can control access to trunk groups that are assigned to that attendant's partition. When control is allowed, the switch returns confirmation tone to the attendant (as would occur in an unpartitioned switch). However, when an attendant attempts to control a trunk group that is not assigned to the attendant's partition, the switch denies the attempt and returns intercept treatment to the attendant.

When Attendant Control of Trunk Group Access is activated toward a *shared* trunk group, the switch applies control to every extension partition sharing the trunk group. Controlled outgoing calls from an extension partition *with* an attendant partition assigned route to the assigned attendant partition. Controlled outgoing calls from an extension partition *without* an attendant partition assigned route to Attendant Partition 0 (if assigned). If Attendant Partition 0 is not assigned, the switch denies these outgoing calls by returning intercept treatment.

An attendant in Attendant Partition 0 can control access to any trunk group* with an assigned button in the lowest two rows of Attendant DTGS buttons. (These two rows of buttons have ‘‘CONT’’ lamps.)

Attendant Interposition Calling and Transfer

An attendant (in a partition other than Attendant Partition 0) is only allowed to place interposition calls to attendants in the same partition or to attendants in Attendant Partition 0. If an attendant tries to place an interposition call to an attendant in any other partition, the switch denies the call by returning intercept treatment.

An attendant in Attendant Partition 0 is allowed to place an interposition call to an attendant in any partition.

Attendant Recall

For calls *held* on an attendant console, the Attendant Recall feature is naturally partitioned on System 85. In a properly partitioned switch, an attendant cannot receive a call that breaks the rules of partitioning. The attendant must extend the call according to partitioning rules. So, for a call held on a console, both parties in the held call can access the attendant holding the call. And, the Attendant Recall feature always alerts the attendant who is holding the call.

For calls *not held* on an attendant console, the Attendant Recall feature is also partitioned. For these recalls, one of the talking parties places the other on hold and then dials the attendant group. In a properly partitioned switch, both of these parties can access the same attendant partition. So, when either party dials the attendant queue (using either the attendant access code or an LDN) the same partitioning checks used by the Dial Access to Attendant feature are made.

Attendant Release Loop Operation

The attendant-calling operations of this feature are naturally partitioned on System 85. In a properly partitioned switch, an attendant cannot receive a call that breaks the rules of partitioning. The attendant must extend the call according to partitioning rules. And, the Attendant Release Loop Operation feature always returns the call to the same attendant console that extended the call.

---

* Except the Attendant Conference trunk group (if assigned).

The ARL Time Change operation is not partitioned. The ARL timed reminder interval can be changed by an attendant in any attendant partition. When this is done, the new ARL timed reminder interval is applied to every attendant partition in the switch.

AUDIX (Audio Information Exchange)

A partitioned System 85 is not aware of AUDIX user permissions. When a voice terminal user dials the AUDIX extension number, the switch follows the usual rules for terminal-to-terminal calling to reach the AUDIX system. Therefore the AUDIX extension number must either belong to the user's extension partition or to Extension Partition 0.

After reaching the AUDIX system, messages can be left for, created by, or retrieved by any subscriber (regardless of the extension partition the subscriber belongs to).

The Call Transfer To (and From) AUDIX functions are partitioned. A voice terminal user (in an extension partition other than Extension Partition 0) can transfer these calls to extension numbers in the same extension partition or to extensions in Extension Partition 0. When the user tries to transfer these calls to any other extension partition (using an extension number), the switch returns intercept treatment to the transferring party.

A voice terminal user in Extension Partition 0 is allowed to transfer these calls (using an extension number) to any voice terminal in the switch.

Authorization Codes

In Procedure 281, Word 1, the amount of digits used in authorization codes is assigned on a system-wide basis. Therefore, every partition in a partitioned switch must use the same amount of digits.

In Procedure 282, Word 1, each authorization code is assigned to an extension partition. Users in different extension partitions are not allowed to share an authorization code, and the same code cannot be duplicated for use in more than one partition.

When a voice terminal user in a specific partition dials an authorization code, call-processing software checks to determine whether the code's associated partition matches the partition of the voice terminal used to place the call. If these partitions do not match, the switch returns intercept treatment to the calling party.

AAR (Automatic Alternate Routing)

The AAR feature is not partitioned. So, a partitioned System 85 *cannot serve as a tandem node* for any tenant's private network. However, with proper assignment, a partitioned System 85 *can serve as an endpoint* for one or more tenants' private networks.

To allow an extension partition to serve as an endpoint in a private network, the partition should be administered as a satellite in a Main/Satellite configuration (where the main also serves as a tandem node in the private network). The tie trunks connecting the main and the ''satellite partition'' must be *dedicated to*

the partition to prevent unexpected access by other partitions. Under this arrangement, outgoing calls route from the satellite partition to the rest of the private network according to the partitioning assignments. Incoming calls route from the main to the satellite partition according to Extension Number Steering.

ACD (Automatic Call Distribution)

Automatic-in type routing to ACD splits is not partitioned. There are no checks in Procedure 115 to ensure that the partition of an automatic-in type trunk group matches the partition of the assigned split. It is the responsibility of the system manager to ensure that these partition numbers match.

Dial-repeating type routing to ACD splits is partitioned. When the digits of an associated extension number are either passed to System 85 from the serving switch or dialed from inside the switch, the Tenant Services feature makes the necessary partitioning checks. Associated extension numbers are assigned to partitions using Procedure 000, Word 4.

There are no checks made in switch administration to ensure the internal partitioning of ACD splits. When administered from the MAAP panel or the SMT, a single split may contain agents from several extension partitions. Once an ACD call enters the split's queue, the call will terminate to the selected available agent regardless of the agent's extension partition assignment.

In general practice, each ACD split provides a functional division of call answering responsibilities. For most (if not all) ACD applications, it is recommended that each split contain only agents assigned to the same extension partition. The System Manager should be careful to follow this guideline.

The ACD feature also allows a split supervisor (in a partition other than Extension Partition 0) to add and remove agents to/from the supervisor's ACD split. When this method for adding agents is used, the Tenant Services feature provides a check to ensure that the added agent belongs either to the supervisor's extension partition or to Extension Partition 0. If not, the switch returns intercept treatment to the split supervisor.

A split supervisor in Extension Partition 0 is allowed to add an agent from any partition to any ACD split in the switch.

An observer (in a partition other than Extension Partition 0) is allowed to use agent override to monitor the call handling activity of an agent in the same extension partition or in Extension Partition 0. When the observer attempts to activate agent override toward an agent in any other partition, the switch returns intercept treatment to the observer.

An observer in Extension Partition 0 is allowed to use agent override to observe any agent in the switch.

An observer (in a partition other than Extension Partition 0) is allowed to use service observing to monitor the call handling activity of an agent in the same extension partition or in Extension Partition 0. When the observer attempts to activate service observing toward an agent in any other partition, the switch returns intercept treatment to the observer.

An observer in Extension Partition 0 is allowed to use service observing to observe any agent in the switch.

Automatic Callback

A voice terminal user (in a partition other than Extension Partition 0) is allowed to activate Automatic Callback toward voice terminals in the same partition or in Extension Partition 0. When the user tries to activate Automatic Callback toward a voice terminal in any other partition, the switch returns intercept treatment.

A voice terminal user in Extension Partition 0 is allowed to activate Automatic Callback toward any voice terminal in the switch.

Automatic Circuit Assurance

An attendant in Attendant Partition 0 is allowed to activate or deactivate the Automatic Circuit Assurance feature. However, the switch will only direct ACA referral calls to the designated attendant console. The designated console for ACA referral calls must belong to Attendant Partition 0.

Attendants (in partitions other than Attendant Partition 0) are not allowed to activate ACA, deactivate ACA, or receive ACA referral calls.

ARS (Automatic Route Selection)

Automatic Route Selection is a partitioned feature on System 85. In a partitioned switch, one or more partitions are assigned to one of 64 call categories in Procedure 320, Words 2 and 3. (Each extension partition or attendant partition can only be assigned to one call category.) In turn, each unique routing designator/call category pair maps to one of 64 ARS patterns in Procedure 314, Word 1. The result is that an ARS call can receive treatment by a different pattern depending on the partition's assigned call category. Further, once an ARS call enters the assigned pattern, the ARS call-processing software checks successive trunk groups in the pattern (in a similar manner to the algorithm described in the Route Advance interaction) to determine whether the call is allowed to use the trunk group.

The three ARS time-of-day routing plans are a system-wide resource, and are not partitioned. Using an unpartitioned System 85, any attendant is allowed to change the routing plan using Manual Override. For a partitioned System 85, an attendant in any partition can also change the system-wide routing plan.

> **NOTE:** For a partitioned System 85, it is recommended that the dial access code (Encode 60) be used to change the ARS routing plan, and that only the attendant(s) in Attendant Partition 0 are informed of the dial access code. If buttons were assigned to every attendant console, then the routing plan might be changed at undesirable times.

Bridged Call

There are no tests in Procedure 052, Word 1 to ensure that the images of an appearance (or that the appearances of an extension) do not cross partition boundaries. It is the responsibility of the system manager to ensure that every image of each extension resides only on voice terminals that are used by a particular extension partition.

Busy Verification of Lines

An attendant (in a partition other than Attendant Partition 0) is allowed to verify any extension residing in Extension Partition 0 or residing in an extension partition that has been assigned to the attendant's partition. When the attendant tries to verify an extension in another partition, the switch returns intercept treatment to the attendant.

An attendant in Attendant Partition 0 is allowed to verify any extension in the switch.

Call Coverage

There are no tests in Procedure 011, Word 1 to ensure that every point in a coverage path belongs to the same extension partition. It is the responsibility of the system manager to ensure that coverage paths do not cross partition boundaries.

There are also no tests in Procedure 000, Word 2 to ensure that a coverage group is only assigned to extensions residing in the same extension partition. It is the responsibility of the system manager to ensure that a coverage group pertaining to one extension partition is not assigned to an extension in another extension partition.

Call Forwarding—Busy and Don't Answer

A voice terminal user (in a partition other than Extension Partition 0) is allowed to forward calls to another voice terminal in the same partition or in Extension Partition 0. The switch will return intercept treatment to a user attempting to forward calls to any other partition.

Call Forwarding—Don't Answer

A voice terminal user (in a partition other than Extension Partition 0) is allowed to forward calls to another voice terminal in the same partition or in Extension Partition 0. The switch will return intercept treatment to a user attempting to forward calls to any other partition.

Call Forwarding—Follow Me

A voice terminal user (in a partition other than Extension Partition 0) is allowed to forward calls to another voice terminal in the same partition or in Extension Partition 0. The switch will return intercept treatment to a user attempting to forward calls to any other partition.

Call Forwarding—Off Net is allowed in a partitioned System 85. This forwarding can be activated using the ARS/AAR access code or using the access code of a trunk group that is dedicated to the user's extension partition.

Call Park

The call park zones for the Call Park feature are not partitioned. By default, the provided zones are equally accessible to voice terminal users in any extension partition.

Voice terminal access to the Call Park feature can be limited in the voice terminal class of service. To limit voice terminal access, assign a Miscellaneous Trunk Restrictions group containing the Call Park trunk group to a voice terminal class of service in Procedure 010, Word 3.

Answer-back channels for the Call Park feature are not partitioned. A parked call can be retrieved by dialing the answer-back access code from any voice terminal in the switch.

Call Pickup

There are no tests in Procedure 000, Word 2 to ensure that a Call Pickup group is only assigned to extensions residing in the same extension partition. The system manager should ensure that every member of each Call Pickup group belongs to the same extension partition.

When Call Pickup groups have been assigned to overlap partition boundaries, the call-processing software provides partitioning for the feature. If a Call Pickup group member in one partition tries to pickup a call to another group member residing in a different extension partition, intercept treatment is returned by the switch.

Call Vectoring

Trunk group-oriented routing to vectors is not partitioned. There are no checks in Procedure 031, Word 2 to ensure that the partition of an automatic-in trunk group matches the partition of the assigned VDN. It is the responsibility of the system manager to ensure that these partition numbers match.

Digit-oriented routing to vectors is partitioned. When a VDN's digits are passed to System 85 from the serving switch or dialed from inside the switch, the Tenant Services feature makes the necessary partitioning checks. Vector directory numbers are assigned to partitions using Procedure 000, Word 4.

The ''queue to main split'' and ''check backup split'' vector commands are not partitioned. For vectors

containing either of these commands, there are no checks in call-processing software to ensure that the extension partition of the answering agent matches the extension partition of the VDN or the split supervisor. It is the responsibility of the System Manager to ensure that ‘‘queue to main split’’ and ‘‘check backup split’’ commands do not cause calls to cross partition boundaries.

The ‘‘route to’’ vector command can route calls to an extension in the VDN’s extension partition or to Extension Partition 0. If a ‘‘route to’’ command is programmed to route calls to another extension partition, the switch will treat a final effective ‘‘route to’’ step as a ‘‘stop’’ step. Otherwise, the ‘‘route to’’ step is ignored, and vector processing continues with the next sequential step.

If a vector contains a ‘‘route to’’ step that routes calls to the shared attendant queue, the call will terminate to an attendant partition that is assigned to the VDN’s extension partition. If no attendant partition is assigned to the VDN’s extension partition, the switch returns Intercept Treatment to the calling party.

If a vector contains a ‘‘route to’’ step that routes calls outside the switch, the call uses the FRL assigned to the VDN and the Call Category assigned to the VDN’s extension partition.

In Procedure 030, Word 1, one Abbreviated Dialing group list is assigned to control the destinations of ‘‘route to’’ commands. The controlling terminal for this group list (assigned in Procedure 059, Word 1) can belong to any extension partition. However, it is strongly recommended that this controlling terminal belong to Extension Partition 0.

The calling party announcements for the Call Vectoring feature are not partitioned. These announcements are available to every extension partition. VDNs in various extension partitions can terminate to several vectors containing ‘‘announcement’’ steps that all request the same recorded announcement.

Call Waiting

A partitioned System 85 allows Call Waiting and provides 1-burst tone for terminal-to-terminal calls inside an extension partition. The switch also allows Call Waiting and provides 1-burst tone for terminal-to-terminal calls between an extension partition and Extension Partition 0.

Otherwise, terminal-to-terminal calls are not allowed to cross partition boundaries. In order to call a voice terminal in any other partition, a voice terminal user must dial the appropriate 7-digit number which routes the call over a CO (Central Office) trunk. When this is done, the switch allows Call Waiting and provides 2-burst tone for the called voice terminal.

The switch allows Call Waiting for incoming calls from the public network, and provides 2-burst tone for these calls.

System 85 allows attendant calls to wait on local voice terminals, and always provides 2-burst tone for the called voice terminal. When allowed, 2-burst tone is provided for attendant calls directed to a voice terminal using the extension number. When allowed, 2-burst tone is provided for attendant calls directed to a voice terminal using DXS (Direct Extension Selection). Two-burst tone is also provided for attendant calls directed to a local voice terminal using the appropriate 7-digit public-network number (when partitioning requires this method of dialing).

CAS (Centralized Attendant Service)

A partitioned System 85 can function as a main location in a CAS arrangement. However, incoming RLTs (release link trunks) are not assigned to specific partitions, so these centralized attendants must reside in Attendant Partition 0.

A partitioned System 85 cannot serve as a branch location in a CAS arrangement.

Conference—Attendant Six Party

The SN254 attendant conference circuits (as many as 13) are not partitioned. These trunks, when provided, are equally accessible to an attendant in any attendant partition needing them.

After a voice terminal or trunk user (the first conferee) calls an attendant (in a partition other than Attendant Partition 0) to establish a conference, the attendant is only allowed to add conferees that would otherwise have access to the first conferee who is not a member of Extension Partition 0.

An extension in Extension Partition 0 can be included in any attendant conference.

An attendant in Attendant Partition 0 is allowed to add conferees from any partition in the switch or from over any trunk group to an attendant conference.

An attendant recall by a conferee is usually directed to the attendant partition associated with that conferee's extension partition. However, when the establishing attendant has placed the conference on hold, an attendant recall by any of the conferees is directed to that attendant.

Conference—Three Party

A voice terminal user (in a partition other than Extension Partition 0) is allowed to establish 3-party conferences that include participants that the user is otherwise allowed to call. If the user tries to add a conferee to the conference by dialing an extension number in another partition, the switch returns intercept treatment to the user.

A voice terminal user in Extension Partition 0 is allowed to establish 3-party conferences with any voice terminal or over any trunk in the switch.

Data Call Setup

Keyboard dialing is a partitioned function of the Data Call Setup feature. A data terminal user (in a partition other than Extension Partition 0) can use keyboard dialing to access data trunk groups that are dedicated to or shared with the partition. If the data terminal user tries to access any other data trunk group, the switch will return Intercept Treatment to the calling party.

A data terminal user in Extension Partition 0 can use keyboard dialing to access any data trunk group in the switch.

The *mnemonic dialing* list, assigned in Procedure 013 Words 1 and 2, is a system-wide resource. These 1000 names are shared by every partition in a partitioned switch.

Mnemonic dialing is a partitioned function of the Data Call Setup feature. A data terminal user (in a partition other than Extension Partition 0) can use mnemonic dialing to access data trunk groups that are dedicated to or shared with the partition. If the data terminal user tries to access any other data trunk group, the switch will return Intercept Treatment to the calling party. (This Intercept Treatment is returned after a disallowed name has been converted to digits that are outpulsed by the switch.)

A data terminal user in Extension Partition 0 can use mnemonic dialing to access any data trunk group in the switch.

Default dialing numbers are not checked for legality at the time they are assigned, but calls to these disallowed numbers are denied when the digits are outpulsed by the switch. When a data terminal user attempts to use default dialing to place a call over another partition's trunk group, the switch returns intercept treatment to the calling party.

A data terminal user in Extension Partition 0 can use default dialing to access any data trunk group in the switch.

DCA (Data Communications Access)

Data Communications Access (analog access to a host computer) is a partitioned feature on System 85.

Line-side computer access is partitioned using partitioned extension numbers. Each extension number is assigned to a modem and is usually included in a hunt group. In turn, the modem's extension number is assigned to an extension partition allowing data-terminal access for users in that partition and Extension Partition 0.

Trunk-side computer access is partitioned using partitioned trunk groups. Since the DCA trunk type (37) can be partitioned, access to these trunk groups can be dedicated to or shared by an extension partition. However, if a computer is accessed from outside the switch, *trunk-side* partitioning would have no effect. There are no partitioning checks between the incoming trunk group and the outgoing DCA trunk group.

Data Protection

The Data Protection feature is a switch-wide resource that can be shared by data-terminal users in every partition. Data Protection—Permanent is assigned to a class of service, and the 63 classes of service are shared by the various extension partitions. Meanwhile, Data Protection—Temporary is activated with a dial access code, and dial access codes are common to the various extension partitions.

Dedicated Switch Connections

There are no tests in Procedure 360, Word 1 to ensure that the endpoints of a dedicated switch connection belong to compatible extension partitions. It is the responsibility of the system manager to ensure that these connections are allowed.

Dial Access to Attendant

In a partitioned switch, the Dial Access to Attendant feature is limited. Each extension partition can be assigned to one attendant partition. (More than one extension partition can be assigned to the same attendant partition.) These associations between extension partitions and attendant partitions are used to determine whether the Dial Access to Attendant feature is allowed, and the system manager is required to establish these associations.

When a voice terminal user dials the ''general'' attendant access code (usually ''0''), the call can only complete to an attendant in the associated attendant partition. If there is no attendant partition associated with the user's extension partition, the switch denies the call and returns intercept treatment to the calling party.

Local voice terminal users can dial an LDN to reach the attendant queue. When this is done, partitioning checks are made. When a voice terminal user (in a partition other than Extension Partition 0) dials an LDN, the call is allowed if the user's extension partition is assigned to the called attendant partition, or if the user is calling Attendant Partition 0. If not, the switch denies the call and returns intercept treatment to the calling party.

A voice terminal user in Extension Partition 0 can use an LDN to call any attendant partition in the switch.

When a voice terminal user (in a partition other than Extension Partition 0) dials a selected attendant access

code, the call is allowed if the dialed attendant resides in the associated attendant partition or in Attendant Partition 0. If not, the switch denies the call and returns intercept treatment to the calling party.

A voice terminal user in Extension Partition 0 is allowed to call a selected attendant in any partition.

DMI (Digital Multiplexed Interface)

DMI (DS1 access to a host computer) is a partitioned feature on System 85. Since the trunk types (108 and 109) for DMI trunk groups can be partitioned, access to these trunk groups can be dedicated to or shared by an extension partition.

DS1 Interface

The DS1 Interface is a partitioned feature on System 85. If the desired trunk type applies to DS1 service and the specific trunk group is partitioned, access to this trunk group can be dedicated to or shared by an extension partition.

Direct Inward Dialing

A DID (Direct Inward Dialing) trunk group can be dedicated to a specific extension partition or attendant partition. When this is done, the system manager should accurately convey the numbering plan (within the partition that is associated with the trunk group) to the serving CO (Central Office) so that calls from the public network can be routed properly.

> **NOTE:** Using this method, if any DID calls are improperly routed to the wrong partition, the switch will return intercept treatment (reorder tone by default) to the calling party.

To minimize the consumption of DID trunk groups in a partitioned System 85, the partitioning of DID trunks can also be set up at the serving CO. Under this arrangement, numerous small DID trunk groups at the CO can be administered *to converge to* a single large DID trunk group (containing as many as 255 discrete trunks) at the partitioned System 85. This large DID trunk group is assigned to Partition 0, and is shared by various partitions. When this is done, the system manager should coordinate the arrangement with the serving CO so that calls from the public network are properly partitioned.

> **NOTE:** With this type of trunking configuration, the System 85 has no knowledge of the partitioning arrangement at the serving CO. So, if any DID calls are improperly routed out of the serving CO, the System 85 would usually allow the call.

Direct Outward Dialing

A voice terminal user in a partitioned switch is allowed to place calls outside the switch using a DOD trunk group that is either dedicated to or shared by the user's extension partition. If the user's extension partition is not allowed to use the dialed trunk group, and if the switch cannot select an allowable alternate trunk group from the Route Advance list (if provided), the switch returns intercept treatment to the calling party.

DCS (Distributed Communications System)

A partitioned System 85 can serve as an endpoint in a DCS cluster. As long as the partitioned switch is serving as an endpoint, an extension partition and an optional attendant partition within the partitioned switch can access the tandem node over dedicated trunk groups. However, a partitioned System 85 should not serve as a tandem node. When this is done, the tandem does not provide trunk-to-trunk partitioning to the public or private network.

When DCS is used in conjunction with Tenant Services, be careful to ensure that the tenant's organization can access the dedicated DCS trunk group at both ends. Otherwise, DCS feature transparency is degraded. As an example, when a voice terminal user at Node A activates Call Forwarding toward a voice terminal in Node B, the activation is accepted by Node A with confirmation tone. However, if both ends of the tie trunk cannot be accessed by the same tenant organization, an call to the user at Node A will fail during the forwarding process. Meanwhile, the calling party receives the usual forwarding display and the forwarding party receives ring-ping.

Allowing a *single* partitioned System 85 to serve as an endpoint in *multiple* DCS clusters can be difficult to implement. Within the partitioned switch, each extension partition must have unique extension numbers. Moreover, the endpoint partition's extension numbers must be unique in its DCS cluster. Also, the DCS tie trunks must have the same trunk-group numbers and trunk numbers at both ends.

Extension Number Portability

Because AAR is not a partitioned feature, an extension partition in a partitioned System 85 can only serve as a satellite location in a portability subnetwork. Therefore, Extension Number Portability is allowed as long as the ported number is consistent with the numbering plan in the partitioned switch. For example, the ported extension number is not allowed to duplicate an extension number in another partition. Also, the extension numbers in every extension partition of the partitioned switch and in the associated portability subnetwork must contain the same amount of digits (i.e., five digits).

HCA (Host Computer Access)

Host Computer Access (DCP access to a host computer) is a partitioned feature on System 85.

Line-side computer access is partitioned using partitioned extension numbers. Each extension number is assigned to a data module and is usually included in a hunt group. In turn, the data module's extension number is assigned to an extension partition allowing data-terminal access for users in that partition and Extension Partition 0.

Trunk-side computer access is partitioned using partitioned trunk groups. Since the trunk types (103 and 104) can be partitioned, access to these trunk groups can be dedicated to or shared by an extension partition. However, if a computer is accessed from outside the switch, *trunk-side* partitioning would have no effect. There are no partitioning checks between the incoming trunk group and the outgoing HCA trunk group.

Hot Line

Hot Line numbers are not checked for legality at the time they are entered. Illegal Hot Line numbers are denied when the digits are outpulsed by the switch. When a user attempts to place a Hot Line call over another partition's trunk group or to an extension in another partition, the switch returns intercept treatment to the calling party.

Hunting

There are no tests in System 85 software to prevent hunting to another partition. It is the responsibility of the system manager to ensure that the extensions in a hunt group do not cross partition boundaries.

Intercept Treatment

The Intercept Treatment feature is administered on a per-system basis. If the Intercept Treatment feature *is programmed* in Procedure 289, Word 1, partitioning denials for internal calls always cause the switch to return the type of intercept administered for internal calls to vacant access codes (usually, intercept tone). If the Intercept Treatment feature *is not programmed* in Procedure 289, Word 1, the switch always returns the default types of intercept treatment: intercept tone for internal calls and reorder tone for calls from the public network.

Intercept Treatment—Attendant

In a partitioned System 85, this function of the Intercept Treatment feature routes intercepted calls to an associated attendant partition. Incoming trunk calls placed to *invalid extension numbers* are routed to an attendant partition assigned to the trunk group. (If an attendant partition has not been assigned to the trunk group in Procedure 270, Word 5, the intercepted call routes to Attendant Partition 0.) Incoming trunk calls placed to *valid extension numbers* that are restricted from receiving the calls (e.g., by DID Restriction, Inward Restriction, or Termination Restriction) are routed to an attendant partition assigned to the called extensions' partitions.

Intercept Treatment—Recorded Announcement

The recorded announcement messages for the Intercept Treatment feature are system-wide messages. There is no capability to assign messages with different content for different partitions.

Intercom—Automatic

There are no tests in Procedure 056, Word 1 to ensure that the two Automatic Intercom members of a nondial intercom group belong to the same extension partition. It is the responsibility of the system manager to ensure that intercom groups do not cross partition boundaries.

Intercom—Dial

There are no tests in Procedure 056, Word 1 to ensure that the members of a Dial Intercom group belong to the same extension partition. It is the responsibility of the system manager to ensure that intercom groups do not cross partition boundaries.

Intercom—Manual

There are no tests in Procedure 056, Word 1 to ensure that the Manual Intercom members of a nondial intercom group belong to the same extension partition. It is the responsibility of the system manager to ensure that intercom groups do not cross partition boundaries.

ISN (Information Systems Network) Interface

A partitioned System 85 can serve as an endpoint in a tenant's data network. As long as the partitioned switch is serving as an enpoint to the ISN, an extension partition within the partitioned switch can access the ISN over dedicated trunk groups. However, a partitioned System 85 should not reside between the ISN and another switch. Acting as a tandem, the partitioned System 85 does not provide trunk-to-trunk partitioning to the ISN.

Last Number Dialed

A voice terminal user (in an extension other than Extension Partition 0) can use the Last Number Dialed button to redial calls within the user's partition, to Extension Partition 0, to the associated attendant partition, to Attendant Partition 0, or over an associated trunk group. When the user tries to use this button to redial an illegal call, the switch returns intercept treatment to the calling party.

A voice terminal user in Extension Partition 0 can use the Last Number Dialed button to redial calls to any extension partition, to any attendant partition, or over any trunk group in the switch.

Leave Word Calling

Leave Word Calling messages can only be left for an extension in the same extension partition or for an extension in Extension Partition 0. When Leave Word Calling is blocked by partitioning, the switch returns intercept treatment to the calling party.

Demand Print

The Demand Print function of the Leave Word Calling feature is also partitioned as part of the Tenant Services feature.

When a demand printout is requested from a voice terminal (in a partition other than Extension

Partition 0), System 85 software checks to determine whether the extension used to retrieve the messages and the extension for which the messages were left are in the same extension partition. If not, the switch returns intercept treatment to the party requesting the demand printout.

From a voice terminal in Extension Partition 0, a demand printout can be requested for messages left to any extension in the switch.

Given the preceding operation, there are two approaches to implementing the Demand Print function on a partitioned switch. One approach is to provide a voice terminal and an associated printer for each extension partition. The other approach is to provide a voice terminal and an associated printer to Extension Partition 0, and share this facility with all of the extension partitions.

NOTE: Access to a printer cannot be shared by several tenants and denied to the other tenants.

Loudspeaker Paging Access

The paging zones for the Loudspeaker Paging Access feature are not partitioned. By default, the provided zones are equally accessible to attendants in any attendant partition and to voice terminal users in any extension partition.

Voice terminal access to the Loudspeaker Paging Access feature can be limited or enhanced in the voice terminal class of service. To limit voice terminal access, assign a Miscellaneous Trunk Restrictions group containing the Loudspeaker Paging trunk group to a voice terminal class of service in Procedure 010, Word 3. To enhance voice terminal access, priority paging can be assigned to a voice terminal class of service in Procedure 010, Word 1.

Answer-back channels for the Loudspeaker Paging Access feature are not partitioned. A page can be answered by dialing the answer-back access code from any voice terminal in the switch.

Main/Satellite/Tributary

A partitioned System 85 can serve as a satellite or a tributary in a Main/Satellite/Tributary arrangement. As long as the partitioned switch is serving as an endpoint in the arrangement, an extension partition and an optional attendant partition within the partitioned switch can access the main over dedicated trunk groups. However, a partitioned System 85 should not serve as the main. When this is done, the main does not provide trunk-to-trunk partitioning to the public or private network.

Malicious Call Trace

An attendant in any attendant partition or a voice terminal user in any extension partition can activate the Malicious Call Trace feature in response to a malicious call.

When the Malicious Call Trace feature is activated on a partitioned switch, only the attendants in Partition 0 are alerted to the malicious call.

Voice recorder trunks are not partitioned. These trunks, when provided, are equally accessible to any partition needing them.

Manual Signaling

There are no tests in Procedure 053, Word 1 to ensure that the members of a Manual Signaling pair belong to the same extension partition. It is the responsibility of the system manager to ensure that Manual Signaling pairs do not cross partition boundaries.

Modem Pooling

The Modem Pooling feature is not partitioned. When a digital trunk group, an analog trunk group, and a conversion resource are provided, access to this analog-to-digital conversion is provided for every partition in the switch.

Multiple Listed Directory Numbers

DID Listed Directory Numbers

Primarily for use with partitioned switches; 999 DID LDNs are available in Release 2, Version 4. Each LDN is associated with one attendant partition in Procedure 270, Word 4. If this association is not made, calls to unassigned LDNs will route to Attendant Partition 0.

If the need arises to route an LDN call to any attendant in the partitioned switch, then the LDN must be associated with an attendant partition that contains every attendant console.

A local voice terminal user can dial an LDN to reach the attendant queue. When this is done, partitioning checks are made. (checks to be provided.)

Non-DID Listed Directory Numbers

An attendant-completing (automatic) trunk group can also be assigned to terminate to a specific attendant partition. The non-DID LDN is published in the same manner as a DID LDN. The serving CO, upon receiving the non-DID LDN, seizes a trunk in the attendant-completing group and routes the call without sending digits to the System 85. These trunk groups are assigned as type ‘‘attendant-completing’’ in Procedure 100, Word 1. Then, these trunk groups are associated with one specific attendant partition in Procedure 270, Word 5. [As many of the available trunk groups as desired (up to 982) can be assigned in this manner.]

NOTE: This method of routing LDN calls can provide LDN access to the partitioned System 85 without using shared trunk groups.

Music-on-Hold Access

The Music-on-Hold Access feature is not partitioned. When a music source is provided and Music-on-Hold is enabled in Procedure 275, Word 1, music is provided to held parties in every partition.

Multiple music sources are also a system-side resource. If an extension (regardless of extension partition) in a certain module places a call on hold, music is added to the held party's time slot by that module's music source (if provided). Otherwise, music is added to the time slot using the music source attached to the *lowest numbered module* that does have a music source.

Override

A voice terminal user (in a partition other than Extension Partition 0) is allowed to place Override calls to extensions in the same partition or in Extension Partition 0. When the user tries to place an Override call to an extension in any other partition, the switch returns intercept treatment to the calling party.

A voice terminal user in Extension Partition 0 can place an Override call to any other extension in the switch.

Personal CO (Central Office) Line

There are no tests in Procedure 057, Word 1 to ensure that every voice terminal (from 1 to 16) sharing a Personal CO Line belongs to the same extension partition. It is the responsibility of the system manager to ensure that these shared lines do not cross partition boundaries.

A Personal CO Line trunk group can be dedicated to each extension partition that uses the personal lines. (There is a maximum of 150 Personal CO Lines that can be spread among as many as 150 trunk groups.) When this is done, each trunk group can be assigned (in Procedure 270, Word 5) to the specific extension partition to which the trunk group terminates.

To minimize the consumption of Personal CO Line trunk groups in a partitioned System 85, these discrete personal lines can also be set up *to converge to* one (or a few) large trunk groups at the partitioned System 85. When this is done, the several trunk groups can be assigned to Extension Partition 0 in Procedure 270, Word 5.

> **NOTE:** This specific trunking configuration is not a ''shared trunk group'' in the legal sense. The calling activity over Personal CO Line trunk groups would not be averaged. Rather, each CO line in the trunk group is assigned to terminate to a specific voice terminal (or set of voice terminals), and can only be used by the assigned terminal(s). Each trunk facility is dedicated to a partition; the *trunk-group numbers* are shared.

Precedence Calling

The Precedence Calling feature cannot be used in a partitioned switch.

Priority Calling

A voice terminal user (in an extension partition other than Extension Partition 0) is allowed to place priority calls within the user's partition or to Extension Partition 0. When the user tries to activate Priority Calling toward an extension in any other partition, the switch returns intercept treatment to the calling party.

A voice terminal user in Extension Partition 0 can place a priority call to any other extension in the switch.

Whenever Priority Calling is allowed, the switch provides 3-burst ringing or 3-burst waiting tone for the called voice terminal.

Privacy—Attendant Lockout

The Attendant Lockout feature is not partitioned. This feature is assigned to the entire switch in Procedure 200, Word 1. If assigned, no attendant in the switch can reenter a call held on the console. If not assigned, every attendant in the switch can reenter a call held on the console.

Queuing

The Queuing feature is not affected by partitioning. If Queuing is administered for an outgoing trunk group and every trunk in the group is busy, then a call (that is otherwise allowed to use the trunk group) can queue on the trunk group. If Queuing is not administered for the trunk group and every trunk in the group is busy, the switch will return reorder tone to the calling party.

Recorded Telephone Dictation Access

The trunk group for the Recorded Telephone Dictation Access feature is not partitioned. By default, the provided trunks are equally accessible to voice terminal users in any extension partition.

Voice terminal access to the Recorded Telephone Dictation Access feature can be limited in the voice terminal class of service. This is done by assigning a Miscellaneous Trunk Restrictions group containing the dictation trunk group to a voice terminal class of service in Procedure 010, Word 3.

Remote Access

Primarily for partitioned switches, the maximum number of Remote Access trunks is increased from 45 to 6000. However, this increased capacity is available using any R2 V4 System 85. Since the limit of trunks per trunk group remains at 255, at least 24 trunk groups would be required to provide the full capacity of 6000 Remote Access trunks. Also, when the full capacity of these trunks is provided, the amount of available ILNs (internal line numbers) would decrease from 32,703 to 26,703.

Like unpartitioned switches, a partitioned System 85 provides a choice of two methods for limiting use of the Remote Access feature: barrier codes and authorization codes. Access using authorization codes is partitioned, and is the recommended form of security for Remote Access on partitioned switches. The barrier code, however, is assigned on a system-wide basis, and has the effect of bypassing partitioning.

Barrier Code Required

Remote Access users who access the switch with the barrier code *are not subject to* partitioning limitations. These users have the full dialing capabilities of a voice terminal user in Extension Partition 0. As an example, these Remote Access users can access any trunk group in the switch.

If these Remote Access users either ‘‘time out’’ to or dial the attendant queue after accessing the switch, the call is directed to the attendant partition that is associated with the Remote Access trunk group.

Authorization Codes Required

Remote Access users who access the switch with an authorization code *are subject to* partitioning limitations. These users have the dialing capabilities of the authorization code’s extension partition. As an example, these users are allowed to access any trunk group that is associated with the authorization code’s partition.

If these Remote Access users dial an authorization code and then either ‘‘time out’’ to or dial the attendant queue after accessing the switch, the call is directed to the attendant partition associated with the authorization code’s extension partition.

Authorization Code Required, But Not Dialed

If a Remote Access user is required to dial an authorization code, but times out to the attendant queue, the call is directed to the attendant partition that is associated with the Remote Access trunk group.

No Barrier Code or Authorization Codes Required

Same as the barrier-code operation.

Restriction—Attendant Control of Voice Terminals

In general practice, the Attendant Control of Voice Terminals feature allows an attendant to activate and cancel temporary restrictions for a specific voice terminal or a predefined group of voice terminals. The Tenant Services feature limits the operation of this feature.

An attendant (in a partition other than Attendant Partition 0) is allowed to activate or cancel restrictions for specific extensions. However, this operation is only allowed when the extension resides in an extension partition that is assigned to the attendant's partition. If the attendant tries to activate or cancel a restriction for an extension in any other partition, the switch returns intercept treatment to the attendant.

An attendant (in a partition other than Attendant Partition 0) is also allowed to activate or cancel restrictions for controlled restriction groups. However, this operation is only allowed when the controlled restriction group has been assigned to the attendant's partition in Procedure 270, Word 2. If the attendant tries to activate or cancel a restriction for any other controlled restriction group, the switch returns intercept treatment to the attendant.

An attendant in Attendant Partition 0 is allowed to activate and cancel restrictions for any extension or any controlled restriction group in the switch.

It is the responsibility of the system manager to assign extensions to controlled restriction groups. However, there are no tests in Procedure 000, Word 2 to ensure partitioning of the 63 groups. It is strongly recommended that every member of each group belong to the same extension partition.

Restriction—Miscellaneous Trunk Restrictions

Miscellaneous Trunk Restrictions can be assigned to a voice terminal class of service in the normal manner. However, the capacity of this feature has not been increased for use with the Tenant Services feature. There remains a capacity of four trunk groups in each of eight restriction groups. With this limited capacity, the Miscellaneous Trunk Restrictions feature is only useful for limited applications (e.g., to restrict Loudspeaker Paging or Call Park).

Ringing—Distinctive

The switch provides 1-burst ringing for terminal-to-terminal calls inside an extension partition. The switch also provides 1-burst ringing for terminal-to-terminal calls between an extension partition and Extension Partition 0.

Otherwise, terminal-to-terminal calls are not allowed to cross partition boundaries. In order to call a voice terminal in any other partition, a voice terminal user must dial the appropriate 7-digit number which routes the call over a CO (Central Office) trunk. When this is done, the switch provides 2-burst ringing at the called voice terminal.

The switch provides 2-burst ringing for incoming calls from the public network in the usual manner.

In a partitioned System 85, the switch provides the usual 2-burst ringing for direct attendant calls or attendant-extended calls to voice terminals (whenever these calls are allowed by the Tenant Services feature).

When Priority Calling, Override, Automatic Callback, or On-Hook Queuing are provided on the switch and allowed in the partitioned environment, the switch provides 3-burst ringing in the usual manner.

Ringing Transfer

There are no tests in Procedures 052, Word 2 and 054, Word 1 to ensure that the members of a Ringing Transfer relationship belong to the same extension partition. However, if the Bridged Call feature is correctly partitioned, the Ringing Transfer feature would also be fully partitioned. It is the responsibility of the system manager to ensure that these Ringing Transfer relationships do not cross partition boundaries.

Route Advance

When the Route Advance feature is invoked for an outgoing call in a partitioned switch, the call-processing software checks each alternate trunk group in the list to ensure that the calling party's extension partition is allowed to use the trunk group.

The details are as follows. When a user attempts to place a call over an outgoing trunk group, the switch checks to determine whether the user is allowed to use the trunk group and whether there is an available trunk in the group. If one of these conditions is not met, the switch then checks to determine whether a Route Advance list is assigned to the originally dialed trunk group. If a list *is not assigned*, the switch returns intercept treatment to the calling party (for trunk group denials), or returns reorder tone or queues the call (for a busy trunk group). If a Route Advance list *is assigned* to the originally dialed trunk group, the switch checks the first trunk group in the list to determine whether the user is allowed to use the trunk group and whether there is an available trunk in the group. If one of these conditions is not met, the switch performs the same check on successive trunk groups in the list until: the call can be completed over an allowable and available trunk, an available trunk cannot be found (the call is queued, or reorder tone is returned), or an allowable trunk group cannot be found (intercept treatment is returned).

The recommended approach for assigning Route Advance lists is to assign trunk groups that are dedicated to a partition as the initial trunk groups in the list. These trunk groups can be followed by shared trunk groups that are also accessible to the same partition. However, there are no tests in Procedure 100, Word 4 to prevent other ways of assigning these lists. It is the responsibility of the system manager to ensure that the Route Advance lists are designed in a practical manner.

Serial Calls

The Serial Calls feature is naturally partitioned on System 85. In a properly partitioned switch, an attendant cannot receive a call that breaks the rules of partitioning. The attendant must extend each call according to partitioning rules. And, the Serial Calls feature always returns the call to the same attendant console that extended the initial call of the series.

Straightforward Outward Completion

The Straightforward Outward Completion feature generally allows an attendant to complete outgoing calls for a voice terminal user in the switch. However, in a partitioned System 85, this operation is controlled. If an attendant (in a partition other than Partition 0) tries to place a call over a trunk that partitioning would not allow the voice terminal user to access, the switch returns intercept treatment to the attendant.

An attendant in Partition 0 can place outgoing calls over any trunk for voice terminal users in any partition. When these attendants press the RELEASE button after making an outgoing connection, the outgoing call is left intact.

Terminal Busy Indications

There are no tests in Procedure 055, Word 1 to ensure that the signaling terminal and the signaled terminal(s) in a Terminal Busy Indications relationship belong to the same extension partition. If this partitioning is either desired or legally required, it is the responsibility of the system manager to ensure that these relationships do not cross partition boundaries.

Through Dialing

The Through Dialing feature generally allows an attendant to access outgoing trunks for voice terminal users in the switch. Once a trunk has been accessed by an attendant, a voice terminal user can dial the call. However, in a partitioned System 85, this operation is controlled. If an attendant (in a partition other than Partition 0) tries to access a trunk that partitioning would not allow the voice terminal user to access, the switch returns intercept treatment to the attendant.

An attendant in Attendant Partition 0 can access any outgoing trunk for voice terminal users in any partition. When these attendants press the RELEASE button after receiving outside dial tone, Through Dialing proceeds normally.

Timed Recall on Outgoing Calls

The Timed Recall on Outgoing Calls feature generally notifies an attendant when the duration of an outgoing trunk call (placed by a nonexempt voice terminal user) has exceeded the preset time interval for the trunk group used. The operation of Timed Recall attendant notification is modified for a partitioned switch. When the preset time interval is exceeded in a partitioned switch, the Timed Recall feature *would first notify* an attendant whose attendant partition is associated with the voice terminal user's extension partition. If the terminal user's partition is not assigned to an attendant partition, the switch *will instead notify* an attendant whose partition is associated with the trunk group used.

Timed Reminder

The Timed Reminder feature is naturally partitioned on System 85. In a properly partitioned switch, an attendant cannot receive a call that breaks the rules of partitioning. The attendant must extend the call according to partitioning rules. And, Timed Reminder always returns the call to the same attendant console that extended the call.

Transfer

A voice terminal user (in an extension partition other than Extension Partition 0) can transfer calls to extension numbers within the same partition or to extensions in Extension Partition 0. When the user tries to transfer a call to any other extension partition (using an extension number), the switch returns intercept treatment to the transferring party.

A voice terminal user in Extension Partition 0 is allowed to transfer calls (using an extension number) to any voice terminal in the switch.

Trunk Group Busy/Warning Indicators to Attendant

A partitioned switch only updates the lamps associated with a DTGS (Direct Trunk Group Selection) button for the attendant consoles that are allowed to access that specific trunk group.

Trunk Verification—Attendant

An attendant (in a partition other than Attendant Partition 0) is allowed to verify trunks within trunk groups that are assigned to that attendant's partition. When this is done, the feature operates normally. However, when an attendant attempts to verify a trunk that is not within a trunk group assigned to the partition, the switch will return intercept treatment to the attendant.

An attendant in Attendant Partition 0 is allowed to verify any trunk that can otherwise be verified using this feature.

Trunk Verification—Voice Terminal

The Trunk Verification—Voice Terminal feature is unaffected in a partitioned switch. The user of either the internal or the remote designated voice terminal can verify, maintenance busy, or maintenance unbusy any trunk that can otherwise be verified using this feature.

The designated terminal(s) can reside in any partition, but it is strongly recommended that these terminals be assigned to Extension Partition 0.

Trunk-to-Trunk Connections

An attendant (in a partition other than Attendant Partition 0) has limited access to the Trunk-to-Trunk Connections feature. When both trunk groups involved in the connection are assigned to the attendant's partition, then the Trunk-to-Trunk Connections feature is allowed. The switch returns intercept treatment to the attendant when this condition is not met.

An attendant in Attendant Partition 0 has full access to the Trunk-to-Trunk Connections feature. These attendants are allowed to connect any two trunks in the switch.

Unattended Console Service—Alternate Console Position

The Alternate Console Position feature is well behaved in a partitioned switch. Using the Alternate Console Position feature, an alternate console is physically connected to it's primary console, and is activated with a 609A transfer panel. Since the switch performs partitioning checks before calls can be routed to/from the primary console, an alternate console would have the same abilities in a partitioned switch as the specific primary console to which it is connected. The system manager need only ensure that the operators of both consoles are members of the same partition.

Unattended Console Service—Call Answer From Any Voice Terminal

The Call Answer From Any Voice Terminal feature is not fully partitioned. In response to the system-wide ''gong alerting,'' the CAAVT access code can be dialed from an unrestricted voice terminal belonging to any extension partition. When a CAAVT call is answered using a voice terminal (in a partition other than Extension Partition 0), the answering party is allowed to transfer the call to an extension in the same extension partition or to an extension in Extension Partition 0. If the answering party tries to transfer the call to any other partition, intercept treatment is returned.

When a CAAVT call is answered using a voice terminal in Extension Partition 0, the answering party is allowed to transfer the call to any extension partition in the switch.

Unattended Console Service—Preselected Call Routing

Default Night Terminal

For an *unpartitioned System 85*, the default night terminal is assigned on a system-wide basis in Procedure 275, Word 2.

For a *partitioned System 85*, the system-wide administration is blocked. Instead, a default night terminal can be assigned to each attendant partition in Procedure 270, Word 3.

Trunk-to-Terminal Assignments

Using an *unpartitioned System 85* with full night service, an attendant can dial the Assign Terminal to Trunk access code to set trunk-to-terminal assignments for Preselected Call Routing.

Using a *partitioned System 85*, this function of full night service is disabled. Instead, these associations can only be assigned in Procedures 116 and 150. However, there are no software checks in Procedure 150 to ensure the proper partitioning of these associations. It is the responsibility of the system manager to design allowable and practical trunk-to-terminal assignments.

Common Night Terminal

Using an *unpartitioned System 85*, an attendant can dial the Assign Common Terminal access code to designate the common night terminal for the entire switch.

Using a *partitioned System 85*, this functionality is modified. To assign a common night terminal for a partition, the partition's controlling attendant dials the Assign Common Termi- nal access code, the extension number of the partition's common night terminal, and then the number of the attendant partition.

Clear All Terminals

Using an *unpartitioned System 85*, an attendant can dial the Clear All Terminals access code to cancel the common night terminal assignment and/or the current trunk-to-terminal assignments for Preselected Call Routing. When this is done, Preselected Call Routing sends incoming calls to the default night terminal (if assigned), and then to the CAAVT queue (if assigned). Using a *partitioned System 85*, this functionality is modified. A partition's controlling attendant can dial the Clear All Terminals access code, followed by the number of the attendant partition. When this is done, *only* the common night terminal assignment for that partition is canceled. (The trunk-to-terminal associations, assigned in Procedures 116 and 150, are not affected.) So, Preselected Call Routing would send incoming calls to the trunk-to-terminal association (if assigned), then to the partition's default night terminal (if assigned), and then to the CAAVT queue (if assigned).

Override Common Night Terminal

Using an *unpartitioned System 85*, an attendant can dial the Override Common Night Terminal access code to bypass the common night terminal and the default night terminal, and divert calls directly to the CAAVT queue.

Using a *partitioned System 85*, the Override Common Night Terminal function is disabled. This function is no longer necessary because CAAVT ''gong alerting'' is not partitioned.

Variable Format Call Detail Recording

The Call Detail Recording features generally allow an attendant to activate or deactivate recording for trunk groups. However, in a partitioned System 85, this operation is controlled. If an attendant (in a partition other than Attendant Partition 0) tries to activate or deactivate recording for a trunk group that the attendant cannot access, the switch returns intercept treatment to the attendant. An attendant in Attendant Partition 0 can activate or deactivate recording for any trunk group in the switch.

A data item is provided to indicate the extension partition of the extension originating or terminating a call. Whenever the extension number changes in the CDR record, the field is updated to reflect the extension partition of the new extension number. For an unpartitioned switch, this field contains an ‘‘A’’ (hexadecimal).

HARDWARE REQUIREMENTS

The Tenant Services feature may require the following additional or special hardware.

To provide an attendant console at a remote module:

- 107A ORPI (Optically Remoted Peripheral Interface).

FEATURE ADMINISTRATION

The Tenant Services feature is assigned on a per-attendant partition and on a per-extension partition basis. The customer can partially administer this feature using the SMT (System Management Terminal). This feature can also be administered using CSM (Centralized System Management).

The following are the applicable MAAP and SMT procedures.

MAAP AND SMT PROCEDURES — TENANT SERVICES			
PROCEDURE	**WORD**	**PURPOSE**	**SMT**
000	4	Assigns an extension or a range of extensions to an extension partition. Unless explicitly translated, extensions are assigned to Extension Partition 0 by default.	Yes
210	2	Assigns an attendant partition (0 to 40) to an attendant console position (1 to 40). Also, assigns an attendant position as a partition's controlling attendant console.	Yes
270	1	Associates an attendant partition (0 to 40) with one or more extension partitions (0 to 999).	Yes
270	2	Assigns the characteristics of an attendant partition including: attendant overflow parameters and associated controlled restriction groups.	Yes
270	3	Assigns the default extension for preselected call routing to an attendant partition. This procedure also displays the attendant partition's common night extension.	Yes
270	4	Assigns an attendant partition (0 to 40) to a listed directory number.	Yes
270	5	Associates a trunk group with one or more extension partitions and one attendant partition.	Yes
282	1	Associates an authorization code with an extension partition.	Yes
314	1	Assigns an ARS pattern number (1 to 64) to a call category (0 to 63) and a routing designator (1 to 64).	Yes
320	2	Associates an ARS call category with an extension partition.	Yes
320	3	Associates an ARS call category with an attendant partition.	Yes
350	1	Assigns the first digit of the feature dial access codes (if required).	No
350	2	Assigns the access codes for the Tenant Services feature. The applicable encodes are as follows. 97 Activate Unattended Console Service (for a partition) 98 Deactivate Unattended Console Service (for a partition).	No

The following are the applicable CSM Command Paths utilizing the **admin** area of TCM or FM.

CSM SCREENS — MASKS TENANT SERVICES		
APPL'N	**OBJECT**	**PURPOSE**
TCM	extension	Assigns an extension or range of extensions to an extension partition.
TCM	control-console	Assigns an attendant partition (0 to 40) to an attendant console position (1 to 40). Also, assigns an attendant position as a partition's controlling attendant console.
TCM	attd-extension-partition	This command associates an attendant partition with an extension partition. One attendant partition (0 to 40) may serve from 1 to 999 extension partitions.
TCM	attd-part-attributes	Administers the attributes associated with an attendant partition. These attributes include: overflow parameters, unattended console default extensions, and controlled restriction groups assigned to the partition.
TCM	ldn-attd-partition	Assigns a LDN to an attendant partition so that incoming calls are properly routed.
FM	extension-partition	Associates a trunk group with extension partitions. A trunk group can be available to all partitions, one partition, or some set of partitions. If a trunk group is associated with a single partition, it is considered ''dedicated.'' If a trunk group is associated with more than one partition, it is considered ''shared.''

CSM SCREENS — MASKS TENANT SERVICES (Contd)		
APPL'N	**OBJECT**	**PURPOSE**
TCM/FM	auth-code	Associated the authorization code and FRL with an extension partition.
FM	ars-call-categories	Administers the mapping between ARS call categories and routing designator/pattern pairs.
TCM	tenant	Administers the extension partition record for a tenant and assigns a name and address to the tenant. Also associates an ARS call category with the extension partition. (When this feature is present, the switch is initialized with 1000 extension partitions, numbered 0 through 999).
FM	arscc-attd-partition	Changes or displays the ARS call category with an attendant partition. (Call categories are assigned to attendant partitions during initialization.)
TCM/FM	first-digit	Assigns the first digit of the feature dial access codes (if required).
TCM/FM	dial-access-code	Assigns the access codes for the Tenant Services feature.

TERMINAL BUSY INDICATIONS

DESCRIPTION

This feature provides a visual indication of the on-hook/off-hook status of a voice terminal to a multiappearance voice terminal. A secondary answering position uses this information when servicing calls for a busy primary position.

When the signaling voice terminal is on-hook, the Terminal Busy Indication lamp on the signaled voice terminal is dark. When the signaling voice terminal goes off-hook, the green status lamp on the signaled voice terminal lights.

Feature History and Development

This feature was first available on System 85 in Release 1. There have been no changes to this feature since the feature was first introduced.

USER OPERATIONS

None.

CONSIDERATIONS

Terminal Busy Lamp

Each Terminal Busy Indication lamp can only display the status of one voice terminal. It is recommended that one voice terminal signal no more than 17 multiappearance voice terminals.

Straight Line Sets

A multiappearance terminal can monitor the busy or idle status of a single-appearance terminal if the single-appearance terminal is administered as an SLS (straight line set) using Procedures 000, 051, and 052.

INTERACTIONS WITH OTHER FEATURES

The following System 85 features affect or are affected by the operation of this feature.

Tenant Services

There are no tests in Procedure 055, Word 1 to ensure that the signaling terminal and the signaled terminal(s) in a Terminal Busy Indications relationship belong to the same extension partition. If this partitioning is either desired or legally required, it is the responsibility of the system manager to ensure that these relationships do not cross partition boundaries.

HARDWARE REQUIREMENTS

A single-appearance voice terminal can be assigned as the signaling, but not as the signaled, voice terminal.

FEATURE ADMINISTRATION

Assignment of the Terminal Busy Indication feature is on a per-voice terminal basis. The customer can administer this feature using the SMT (System Management Terminal). This feature can also be administered using CSM (Centralized System Management).

The following are the applicable MAAP and SMT procedures.

MAAP AND SMT PROCEDURES — TERMINAL BUSY INDICATIONS			
PROCEDURE	**WORD**	**PURPOSE**	**SMT**
000	1	Assigns an analog extension for use on multiappearance voice terminals.	Yes
051	1	Assigns an analog voice terminal as type SLS to operate as a signaling terminal.	Yes
052	1	Displays the voice terminal button types.	Yes
055	1	Administers a signaling and signaled terminal with lamp for Terminal Busy Indication.	Yes

The following is the applicable TCM path name used with the AP 16.

TCM SCREEN — TERMINAL BUSY INDICATIONS	
PATH NAME	**PURPOSE**
terminal-change terminal station-busy	Displays or prints a report of Terminal Busy Indication assignments.

The following are the applicable CSM Command Paths utilizing the **admin** area of TCM or FM.

CSM SCREENS — MASKS TERMINAL BUSY INDICATIONS		
APPL'N	**OBJECT**	**PURPOSE**
TCM	extension	Assigns an analog extension for use on multi-appearance voice terminals.
TCM	sls	Assigns an analog voice terminal as type SLS to operate as a signaling terminal.
TCM	This command will be set type: i.e., 36-button, 12-button, bct, vds, feature-module, or coverage-module.	This command displays the voice terminal button types, and administers a signaling and signaled terminal with a lamp for Terminal Busy Indication.

THROUGH DIALING

DESCRIPTION

This feature allows an attendant to select the outgoing trunk group for an outgoing call. The calling party then dials the seven or ten digits required to complete the call. This allows the attendant to retain control of trunk use while reducing attendant call-processing time.

Feature History and Development

This feature was first available on System 85 in Release 1. There have been no changes to this feature since Release 1.

USER OPERATIONS

The following are the user operating procedures for this feature.

To Complete a Through Dialing Request for a User by the Attendant

Without a trunk group key available and maintaining supervision:

- The voice terminal user calls the attendant. [PA lamp goes out, ATND lamp lights, and the ICI displays the extension number.]
- Attendant presses the appropriate loop button. [Attendant and user are connected.]
- The voice terminal user requests a call to an outside party.
- Press START. [SPLIT lamp lights, calling party is split away from the attendant, and the dial tone is heard.]
- Dial the trunk group access code. [Second dial tone is heard, and the ANS lamp lights.]
- Press HOLD. [Attendant is removed from the connection, calling party hears dial tone, ATND and SPLIT lamps go out, the ICI display goes out, and the HOLD and PA lamps light.]
- The calling party dials the number of the party being called.

Without a trunk group key available and not maintaining supervision:

- The voice terminal user calls the attendant. [PA lamp goes out, ATND lamp lights, and the ICI displays the extension number.]
- Attendant presses the appropriate loop button. [Attendant and user are connected.]
- The voice terminal user requests a call to an outside party.
- Press START. [SPLIT lamp lights, calling party is split away from the attendant, and dial tone is heard.]
- Dial the trunk group access code. [Second dial tone is heard, and the ANS lamp lights.]
- Press RELEASE. [Attendant is removed from the connection; calling party hears dial tone; ANS, ATND, and SPLIT lamps go out; the ICI display goes out; and the PA lamp lights.]
- The calling party dials the number of the party being called.

With a trunk group key available and maintaining supervision:

- The voice terminal user calls the attendant. [PA lamp goes out, ATND lamp lights, and the ICI displays the extension number.]
- Attendant presses the appropriate loop button. [Attendant and user are connected.]
- The voice terminal user requests use of the Through Dialing feature.
- Press the appropriate trunk group key. [SPLIT and ANS lamp lights, the calling party is split away from the attendant, and dial tone is heard.]
- Press HOLD. [Attendant is removed from the connection, calling party hears dial tone, ATND and SPLIT lamps go out, the ICI display goes out, and the HOLD and PA lamps light.]
- The calling party dials the number of the party being called.

With a trunk group key available and not maintaining supervision:

- The voice terminal user calls the attendant. [PA lamp goes out, ATND lamp lights, and the ICI displays the extension number.]
- Attendant presses the appropriate loop button. [Attendant and user are connected.]
- The voice terminal user requests use of the Through Dialing feature.
- Press the appropriate trunk group key. [SPLIT and ANS lamp lights, the calling party is split away from the attendant, and dial tone is heard.]
- Press RELEASE. [Attendant is removed from the connection; calling party hears dial tone; ANS, ATND, and SPLIT lamps go out; the ICI display goes out; and the PA lamp lights.]
- The calling party dials the number of the party being called.

CONSIDERATIONS

Straightforward Outward Completion and Through Dialing

The Straightforward Outward Completion feature is similar to the Through Dialing feature. Using Straightforward Outward Completion, the attendant (instead of the calling party) dials the desired digits after second dial tone. The attendant does not press the RELEASE button until ringback tone is returned.

INTERACTIONS WITH OTHER FEATURES

The following System 85 features affect or are affected by the operation of this feature.

CDRR (Call Detail Recording and Reporting)

Whenever the attendant allows a terminal user to use the Through Dialing feature, CDRR records the call as an attendant-assisted call. The attendant must dial the account code (if applicable) before the trunk access code.

Centralized Attendant Service

When a switch is a branch location in a Centralized Attendant Service network, the Centralized Attendant Service attendant can allow terminal users at the branch to through dial calls at the branch.

Last Number Dialed

The Last Number Dialed feature stores and redials the digits dialed by a voice terminal user during a Through Dialing connection. However, for a Through Dialing call, an attendant initially accesses a trunk group for the voice terminal user. Therefore, when digits are redialed using the Last Number Dialed feature, the trunk-group access digit(s) would not be included as outpulsed digits.

Restriction—Attendant Control of Voice Terminals

Controlled Outward Restriction can be bypassed by using the Through Dialing feature.

Restriction—Code Restriction

Through Dialing bypasses Code Restriction.

Restriction—Miscellaneous Trunk Restrictions

The Through Dialing feature operates normally from the restricted terminal at the attendant’s discretion. If the attendant determines that the terminal should be allowed access to the trunk, the miscellaneous trunk restriction checks are bypassed when the attendant seizes the trunk and then releases to allow the terminal user to complete the dialing.

Restriction—Toll Restriction

Through Dialing bypasses Toll Restriction.

Restriction—Voice Terminal Restrictions

Through Dialing bypasses Outward Restriction.

SMDR (Station Message Detail Recording)

Whenever the attendant allows a terminal user to use the Through Dialing feature, SMDR records the call as an attendant-assisted call. The attendant must dial the account code (if applicable) before the trunk access code.

Tenant Services

The Through Dialing feature generally allows an attendant to access outgoing trunks for voice terminal users in the switch. Once a trunk has been accessed by an attendant, a voice terminal user can dial the call. However, in a partitioned System 85, this operation is controlled. If an attendant (in a partition other than Partition 0) tries to access a trunk that partitioning would not allow the voice terminal user to access, the switch returns intercept treatment to the attendant.

An attendant in Attendant Partition 0 can access any outgoing trunk for voice terminal users in any partition. When these attendants press the RELEASE button after receiving outside dial tone, Through Dialing proceeds normally.

Variable Format Call Detail Recording

Whenever an attendant allows Through Dialing by a voice terminal user, the call record shows the call as an attendant-assisted call. If an account code is used, the attendant must dial the account code before dialing the trunk-group access code.

HARDWARE REQUIREMENTS

None.

FEATURE ADMINISTRATION

The Through Dialing feature is provided in all switches. Feature assignment is not required.

TIMED RECALL ON OUTGOING CALLS

DESCRIPTION

This feature provides control over the use of outgoing trunks when there is an excessive number of lengthy calls. Timed Recall automatically transfers control of the outgoing calls from selected voice terminals to an attendant after a predetermined time interval of 1 to 31 minutes. This feature applies to voice terminals with a specific class of service designated in switch translation (see Feature Administration). The switch sends a warning tone to the calling party 30 seconds before the transfer occurs. The warning tone is a 440-hertz tone with a duration of 1 second.

When a call is transferred to an attendant, it is identified by the Attendant Display feature. At this time, the attendant assumes control of the call. The attendant may talk with the calling and called party to decide whether the call should continue or not.

Feature History and Development

This feature was first available on System 85 in Release 1. There have been no changes to this feature since Release 1.

USER OPERATIONS

The following are the user operating procedures for this feature.

To Answer a Transferred Call:

- Press the appropriate loop button. [The PA lamp goes out. The ATND lamp lights.]

To Discontinue the Call:

- Press CANC. [ATND lamp and ICI display go dark. The call is disconnected, and the trunk is released.]

To Continue the Call for Another Timed Interval:

- Press RELEASE. [ATND lamp and ICI display go dark. The 2-way connection is restored. The attendant is released from the call.]

To Allow the Call to Continue Indefinitely:

- Press HOLD. [The call is held on the attendant console. The HOLD button lights. The attendant is removed from the connection.] (The call is no longer subject to Timed Recall.)

CONSIDERATIONS

Timed Interval

An individual timed interval can be assigned to each trunk group selected for timed recall. The timed interval can be any value between 1 and 31 minutes.

Recall Level

An individual recall level can be assigned to each trunk group. When the number of idle trunks in a group falls below the assigned level (from 0 to 7), Timed Recall is activated for the trunk group.

2-Way Trunk Groups

If the feature is assigned to a *2-way* trunk group, the Timed Recall is in effect for both *incoming* and *outgoing* calls.

Attendant Calls

Outgoing calls placed by an attendant and incoming calls to an attendant console (over a timed 2-way trunk group) are exempt from recall.

Night Mode

If the attendant console is in the night mode, the Timed Recall feature is disabled.

Hard and Soft Processor Swaps

Stable calls on timed trunk groups will endure a hard processor swap.

During a hard processor swap, the switch ceases timing outgoing calls and does not place Timed Recalls to an attendant.

After a hard processor swap, the switch resumes timing controlled calls. However, the clock resets to zero. So, the switch does not place a Timed Recall until another complete time interval elapses.

The Timed Recall on Outgoing Calls feature operates normally during a soft processor swap.

INTERACTIONS WITH OTHER FEATURES

The following System 85 features affect or are affected by the operation of this feature.

Busy Verification of Lines

Busy verification is denied if the terminal line being verified is connected to a call which has already been switched to an attendant position by means of the Timed Recall on Outgoing Calls feature. Busy verification is allowed on terminal-to-trunk calls that have not yet been switched to the attendant by this feature. The recall timing is suspended as long as the attendant remains bridged on the connection by the Busy Verification of Lines feature and is resumed when the attendant releases the line.

Conference—Attendant Six Party

The Timed Recall on Outgoing Calls feature does not apply to an attendant conference connection.

Conference—Three Party

A voice terminal may place an outgoing call and later add a second trunk to the call. The first trunk, already in use and timing, receives recall treatment (i.e., times out and routes to the attendant) even after the addition of the second trunk to the call. Afterwards, the trunk with the shorter recall time is timed for recall treatment.

Data Protection

This feature prohibits the attendant from intervening or monitoring calls on outgoing trunks. Thus, Timed Recall on Outgoing Calls cannot be used if Data Protection is assigned.

Malicious Call Trace

During a malicious call, the Timed Recall feature is deactivated for a trunk that is involved in the malicious call.

An activating console receives modified Timed Recall operation during a Malicious Call Trace. If the activating console is position busy, the Priority lamp lights during a timed recall, but the tone does not sound. If the console is not position busy, the Priority lamp lights and the tone sounds during a timed recall.

A controlling console receives modified Timed Recall operation during a Malicious Call Trace. While the controlling attendant is performing the trace, the Priority lamp lights during a timed recall, but the tone

does not sound. After the trace is deactivated, the Priority lamp lights and the tone sounds for a timed recall.

Privacy—Attendant Lockout

If Privacy—Attendant Lockout is activated, the attendant cannot release after a timed recall by pressing the HOLD button. The switch ignores any press of the HOLD button.

Tenant Services

The Timed Recall on Outgoing Calls feature generally notifies an attendant when the duration of an outgoing trunk call (placed by a nonexempt voice terminal user) has exceeded the preset time interval for the trunk group used. The operation of Timed Recall attendant notification is modified for a partitioned switch. When the preset time interval is exceeded in a partitioned switch, the Timed Recall feature *would first notify* an attendant whose attendant partition is associated with the voice terminal user's extension partition. If the terminal user's partition is not assigned to an attendant partition, the switch *will instead notify* an attendant whose partition is associated with the trunk group used.

Unattended Console Service—Preselected Call Routing

While the Preselected Call Routing feature is active, the Timed Recall on Outgoing Calls feature is deactivated.

RESTRICTING FEATURE USE

Timed Recall is not allowed on terminals with the exempt status administered in the terminal's line class of service.

HARDWARE REQUIREMENTS

None.

FEATURE ADMINISTRATION

Assignment of the Timed Recall on Outgoing Calls feature is on a per-trunk group basis. The customer can partially administer this feature using the SMT (System Management Terminal) or the TCM (Terminal Change Management) feature. This feature can also be administered using CSM (Centralized System Management).

The following are the applicable MAAP and SMT procedures.

MAAP AND SMT PROCEDURES — TIMED RECALL ON OUTGOING CALLS			
PROCEDURE	**WORD**	**PURPOSE**	**SMT**
000	1	Assigns the voice terminal class of service to an extension number.	Yes
010	1	Assigns Timed Recall Exempt to a voice terminal class of service.	Yes
101	—	Specifies the time (0 to 31) and the level (0 to 7) for Timed Recall on Outgoing Calls.	No
204	1	Designates the desired alphanumeric display for recalls to the attendant.	No

The following are the applicable TCM path names used with the AP 16.

TCM SCREENS — TIMED RECALL ON OUTGOING CALLS	
PATH NAME	**PURPOSE**
terminal-change class-of-service attributes	Assigns Timed Recall Exempt to a voice terminal class of service.
terminal-change extensions attributes	Assigns the class of service to an extension number.

The following are the applicable CSM Command Paths utilizing the **admin** area of TCM or FM.

CSM SCREENS — MASKS TIMED RECALL ON OUTGOING CALLS		
APPL'N	**OBJECT**	**PURPOSE**
TCM	extension	Assigns the voice terminal class of service to an extension number.
TCM	class-of-service	Assigns Timed Recall Exempt to a voice terminal class of service.
FM	trk-grp	Administers the time (0 to 31) and the level (0 to 7) for Timed Recall on Outgoing Calls.
TCM	console-messages	Designates the desired alphanumeric display for recalls to the attendant.

TIMED REMINDER

DESCRIPTION

The Timed Reminder feature automatically alerts the attendant after 30 seconds for the following types of calls:

- Calls on a switched loop waiting for the called party to answer
- Calls on a switched loop waiting to be connected to a busy extension number
- Incoming calls placed on hold on the console.

The attendant can reenter the call and decide whether to terminate the call or permit the waiting to continue. By reentering the call, the attendant lets the calling party know that the call has not been forgotten. The Timed Reminder feature enables the attendant to keep track of every call and provides callers with good service.

Timed Reminder operates in two phases: the 30-second timing phase and the attendant alerting phase. The timing phase begins when an attendant releases from a connection by pressing the RELEASE or the HOLD button. The attendant alerting phase begins after the timing phase elapses. The switch alerts the attendant by flashing the RING, BUSY, or HOLD lamp on the attendant console, whichever is applicable, and emitting a 1950-hertz tone.

Feature History and Development

This feature was first available on System 85 in Release 1. There have been no changes to this feature since Release 1.

USER OPERATIONS

To Use Timed Reminder When the Called Voice Terminal Is Idle:

- Attendant receives a call. [ATND lamp lights.]
- Press START. [SPLIT lamp lights, and calling party is split away from the attendant.]
- Dial the called voice terminal's extension. [ATND lamp goes out, and RING lamp lights.]
- Press RELEASE. [The timing phase starts. SPLIT lamp goes out, and PA lamp lights.]
- After 30 seconds, the timing phase completes. [RING lamp flashes, and a tone is generated.]

To Use Timed Reminder When the Voice Terminal Is Busy

If the Attendant Call Waiting feature isn't activated:

- Attendant receives a call. [ATND lamp lights.]
- Press START. [SPLIT lamp lights, and calling party is split away from the attendant.]
- Dial the called voice terminal's extension. [ATND lamp goes out, BUSY lamp lights, and the attendant hears busy tone.]
- Press CANC. [Attendant is reconnected to the calling party. BUSY and SPLIT lamps go out, ATND lamp lights, and busy tone removed.]
- Verify that calling party will wait.
- To activate the Timed Reminder feature, press HOLD. [Calling party hears a special ringback tone, ATND lamp goes out, and the HOLD and PA lamps light.]
- The timing phase completes. [HOLD lamp flashes, and a tone is generated.]

If the Attendant Call Waiting feature is activated:

- Attendant receives a call. [ATND lamp lights.]
- Press START. [SPLIT lamp lights, and calling party is split away from the attendant.]
- Dial the called voice terminal's extension. [The called voice terminal is busy, and the attendant is reconnected to the calling party. ATND lamp goes out, BUSY lamp lights, and the attendant hears confirmation tone.]
- Verify that calling party will wait.
- To begin the Timed Reminder feature, press RELEASE. [SPLIT lamp goes out, BUSY and PA lamps light, and the Call Waiting tone is transmitted to the called voice terminal.]
- The timing phase completes. [BUSY lamp flashes, and a tone is generated.]

To Use Timed Reminder When the Call Uses a Trunk

When the call reaches the called voice terminal:

- Attendant receives a call. [ATND lamp lights.]
- Dial the trunk-group access code or the appropriate DTGS key. [SPLIT lamp lights.]
- The trunk is seized. [Dial tone]
- Attendant or calling party dials the called voice terminal's extension. [ATND lamp goes out, and ANS lamp lights.]
- Press HOLD. [ANS and SPLIT lamps go out. PA and HOLD lamps light.]
- Calling party is connected to called party.

- To begin the Timed Reminder feature, one party goes on-hook.
- The timing phase completes. [HOLD lamp flashes, and a tone is generated.]

The call does not reach the called voice terminal:

- Attendant receives a call. [ATND lamp lights.]
- Dial the trunk-group access code or the appropriate DTGS key. [SPLIT lamp lights.]
- The trunk is seized. [Dial tone]
- Attendant or calling party dials the called voice terminal's extension. [ATND lamp goes out, and ANS lamp lights.]
- Press HOLD. [ANS and SPLIT lamps go out. PA and HOLD lamps light.]
- Calling party is not connected to called party and the Timed Reminder feature begins.
- The timing phase completes. [HOLD lamp flashes, and a tone is generated.]

To Reconnect to the Calling Party

From an idle loop:

- Press the appropriate loop key. [RING and PA lamps go out, ATND lamp lights, and tone quits.]

From a busy loop without Attendant Call Waiting:

- Press the appropriate loop key. [HOLD and PA lamps go out, ATND lamp lights, and tone quits.]

From a busy loop with Attendant Call Waiting:

- Press the appropriate loop key. [BUSY and PA lamps go out, ATND lamp lights, and tone quits.]

To Cancel the Call to the Called Terminal

If the call is to be terminated:

- The calling party can go on-hook, or the attendant can press RELEASE.

If the call is to be extended to another number:

- Be sure the attendant and calling party are reconnected, and the ATND lamp is lit.
- Press CANC.
- Begin again as if attendant had just received the call. See uses of the Timed Reminder feature in the beginning of the User Operations section.

CONSIDERATIONS

Ending the Cycle

The timed reminder cycle is ended when:

- The called voice terminal goes on-hook and connects with the calling party.
- The calling party goes on-hook.
- 30 seconds elapses.

Serial Calls

During activation of a Serial Call, an attendant presses the HOLD button to retain access to the switched loop. Timed Reminder timing begins when one call is finished, and the calling party is waiting for the next call to be initiated. After the timed interval elapses, the HOLD lamp flashes, and the attendant should return to the calling party by pressing the appropriate loop button. The attendant is now able to extend the call to the next call destination in the series.

Up to six calls per attendant console can be using the Timed Reminder feature at one time. The timed reminder cycle can be repeated as often as necessary.

Call Waiting Tone

The Timed Reminder call waiting tone is two 100-millisecond, 400-hertz beeps.

Hard and Soft Processor Swaps

When a hard processor swap occurs, unanswered and held calls are dropped by the switch.

Since these calls are dropped, the switch does not place Timed Reminders to an attendant during the hard swap.

The Timed Reminder feature operates normally during a soft processor swap.

INTERACTIONS WITH OTHER FEATURES

The following System 85 features affect or are affected by the operation of this feature.

Attendant Release Loop Operation

The Attendant Release Loop Operation feature is similar to the Timed Reminder feature, and both of these features can reside on the same switch. The Timed Reminder feature is always provided, while the Attendant Release Loop Operation feature is optional.

When both features reside on the same switch, these two features operate simultaneously and control two separate sets of calls. *Incoming trunk calls* are controlled by the Attendant Release Loop Operation feature, and the timed reminder interval for these calls is assigned in Procedure 275, Word 4. *Other affected calls* are controlled by the Timed Reminder feature, and the timed reminder interval for these calls is fixed at 30 seconds.

When only the Timed Reminder feature resides on the switch, *all affected calls* are controlled by the Timed Reminder feature, and the timed reminder interval is fixed at 30 seconds.

Call Coverage

When the STA ID button is pressed, the extension number to which the call was redirected is indicated on the attendant display rather than the originally called extension number.

Call Forwarding—Busy and Don’t Answer

If the attendant presses the STA ID button after the extended call forwards, the attendant display indicates the extension number that the call forwarded to rather than the originally called extension number.

Call Forwarding—Don't Answer

If the attendant presses the STA ID button after the extended call forwards, the attendant display indicates the extension number that the call forwarded to rather than the originally called extension number.

Call Forwarding—Follow Me

When the STA ID button is pressed, the attendant display indicates the extension number that the call forwarded to rather than the originally called extension number.

Centralized Attendant Service

The Centralized Attendant Service feature uses a recall timing process that is different from the standard Timed Reminder feature. The timed interval for Centralized Attendant Service is assignable in 2-second intervals up to a maximum of 62 seconds.

Hunting

When the STA ID button is pressed, the extension number to which the call hunted is indicated on the attendant display rather than the originally called extension number.

Malicious Call Trace

The activating console receives modified Timed Reminder operation during a Malicious Call Trace. While the activating attendant is connected to the malicious call, the Ring lamp flashes during a timed reminder, but the tone does not sound. After the activating attendant disconnects from the malicious call, the Ring lamp flashes and the tone sounds during a timed reminder.

The controlling console also receives modified Timed Reminder operation during a Malicious Call Trace. While the controlling attendant is performing the trace, the Ring lamp flashes during a timed reminder, but the tone does not sound. After the trace is deactivated, the Ring lamp flashes and the tone sounds during a timed reminder.

Tenant Services

The Timed Reminder feature is naturally partitioned on System 85. In a properly partitioned switch, an attendant cannot receive a call that breaks the rules of partitioning. The attendant must extend the call according to partitioning rules. And, Timed Reminder always returns the call to the same attendant console that extended the call.

RESTRICTING FEATURE USE

The Timed Reminder feature cannot be restricted. However, the attendant can turn off the signal using a switch behind the front panel of the attendant console.

HARDWARE REQUIREMENTS

None.

FEATURE ADMINISTRATION

The Timed Reminder feature is provided on all switches. Assignment or administration is not required.

TOUCH-TONE CALLING SENDERIZED OPERATION

DESCRIPTION

This feature reduces the time necessary to set up calls to distant locations equipped to receive touch-tone calling signals. The collected digits are sent to the distant office via touch-tone service signaling. If a distant location is not equipped to receive touch-tone calling signals, the switch generates and sends dial pulses.

Feature History and Development

This feature was first available on System 85 in Release 1. There have been no changes to this feature since Release 1.

USER OPERATIONS

None.

INTERACTIONS WITH OTHER FEATURES

The following System 85 features affect or are affected by the operation of this feature.

Abbreviated Dialing

The Touch-Tone Calling Senderized Operation feature is a prerequisite for implementing Abbreviated Dialing.

AAR (Automatic Alternate Routing)

When the Automatic Alternate Routing feature uses subnetwork trunking, each call requires a touch-tone calling sender. If a sender is not available, the switch denies the call.

ARS (Automatic Route Selection)

When the Automatic Route Selection feature uses subnetwork trunking, each call requires a touch-tone calling sender. If a sender is not available, the switch denies the call.

HARDWARE REQUIREMENTS

The Touch-Tone Calling Senderized Operation feature requires the following additional or special hardware.

- SN252 sender circuits (four circuits per circuit pack)
- SN251 receiver circuits (four circuits per circuit pack).

FEATURE ADMINISTRATION

The Touch-Tone Calling Senderized Operation feature is assigned on a per-trunk group basis. This feature is administered using the MAAP. This feature can also be administered using CSM (Centralized System Management).

The following are the applicable MAAP procedures.

MAAP PROCEDURES
TOUCH-TONE CALLING SENDERIZED OPERATION

PROCEDURE	WORD	PURPOSE
100	1	Administers the trunk type and trunk group number for touch-tone service.
101	—	Administers the type of signaling to be sent over a particular trunk group.
150	—	Assigns the SN252 equipment location of a Touch-Tone Sender trunk to its trunk-group number.

The following is the applicable CSM Command Path utilizing the **admin** area of TCM or FM.

CSM SCREEN — MASK
TOUCH-TONE CALLING SENDERIZED OPERATION

APPL'N	OBJECT	PURPOSE
FM	trk-grp	This command provides administration for the following: trunk type and trunk-group number for touch-tone service, type of signaling to be sent over a particular trunk group, and the assignment of equipment location of a Touch-Tone Sender trunk to its trunk-group number.

TOUCH-TONE DIALING

DESCRIPTION

Touch-Tone Dialing provides quick and easy dialing on a touch-tone dialing pad. This dialing method is standard on voice terminals and attendant consoles for System 85. Moreover, Touch-Tone Dialing is required for the use of certain features. For example, a touch-tone dialing pad is required to dial access-codes beginning with the special character ‘‘*’’ or ‘‘#.’’ Also, Remote Access requires that a dialing register be retained for additional dialing after a line or trunk seizure.

Buttons 0 through 9 are the equivalent of the same numbers on a rotary dial. The two extra buttons, * and #, support special functions such as forming part of access codes. These characters are not available with rotary dialing. When a touch-tone dialing button is pressed, a distinctive tone is generated for each button.

If a distant switching system is unable to accept touch-tone calling signals, the switch has the ability to generate dial pulses by using Touch-Tone Dialing to Dial Pulse Conversion.

Feature History and Development

This feature was first available on System 85 in Release 1. There have been no changes to this feature since Release 1.

USER OPERATIONS

Touch-tone dialing is accomplished by pressing the appropriate button on a touch-tone dialing pad. The tone generated can be heard through the voice terminal receiver. Each button should be pressed firmly and released before the next button is pressed to avoid overlapping tones.

INTERACTIONS WITH OTHER FEATURES

Extension Number Portability

Extension Number Portability requires routing decisions at several points in the digit-collection process. This results in additional call-setup time. Touch-tone dialing is recommended for portability subnetworks to reduce the call-setup time as much as possible.

HARDWARE REQUIREMENTS

The Touch-Tone Dialing feature requires the following specific hardware:

- SN251 touch-tone dialing receiver/register.

FEATURE ADMINISTRATION

Assignment of the Touch-Tone Dialing feature is on a per-trunk group and on a per-terminal class-of-service basis. The customer can partially administer this feature using the SMT (System Management Terminal) or the TCM (Terminal Change Management) feature. This feature can also be administered using CSM (Centralized System Management).

The following are the applicable MAAP and SMT procedures.

MAAP AND SMT PROCEDURES — TOUCH-TONE DIALING

PROCEDURE	WORD	PURPOSE	SMT
000	1	Assigns the voice terminal class of service to an extension number.	Yes
010	1	Assigns touch-tone dialing to a terminal class of service.	Yes
100	1	Assigns the trunk type of a touch-tone dialing trunk group to trunk-group number 17.	No
150	—	Assigns the SN251 equipment location of a touch-tone dialing trunk to trunk-group number 17.	No

The following are the applicable TCM path names used with the AP 16.

TCM SCREENS — TOUCH-TONE DIALING

PATH NAME	PURPOSE
terminal-change class-of-service attributes	Assigns touch-tone dialing to a voice terminal class of service.
terminal-change extensions attributes	Assigns the class of service to an extension number.

The following are the applicable CSM Command Paths utilizing the **admin** area of TCM or FM.

CSM SCREENS — MASKS TOUCH-TONE DIALING		
APPL'N	**OBJECT**	**PURPOSE**
TCM	extension	Assigns the voice terminal class of service to an extension number.
TCM	class-of-service	Assigns touch-tone dialing to a class of service.
FM	trk-grp	Assigns the trunk type and equipment location of a touch-tone dialing trunk group to trunk-group number 17.

TRANSFER

DESCRIPTION

This feature allows voice terminal users to transfer calls to other terminals or trunks without attendant assistance.

The ability to transfer a call to another party without attendant assistance enhances the efficiency of the switch operation and projects a professional business image. This feature can save time for all parties involved especially when a call was initially misdirected or after finishing business with one party and another party is needed to conduct additional business.

Feature History and Development

This feature was first available on System 85 in Release 1. There have been no changes to this feature since Release 1.

USER OPERATIONS

The following are the user operating procedures for this feature.

Transferring a Call on a Terminal Without a TRANSFER or RECALL Button:

- Be sure there is a 2-party connection.
- Momentarily press the switchhook. [The second party is placed on soft hold, and recall dial tone is heard.]
- Dial the third party. [Ringback tone]
- If announcement is necessary, wait for the third party to answer and announce the call.
- If no announcement is necessary, wait to hear ringback tone.
- Go on-hook. [Call is transferred to the third party.]

Transferring a Call on a Terminal With a RECALL (or R) Button, but Without a TRANSFER Button:

- Be sure there is a 2-party connection.
- Press RECALL. [The second party is placed on soft hold, and recall dial tone is heard.]
- Dial the third party. [Ringback tone]
- If announcement is necessary, wait for the third party to answer and announce the call.
- If no announcement is necessary, wait to hear ringback tone.
- Go on-hook. [Call is transferred to the third party.]

Transferring a Call on a Terminal With a TRANSFER Button:

- Be sure there is a 2-party connection.
- Press TRANSFER or CONFERENCE. [The second party is placed on hard hold, and dial tone is heard]
- Dial the third party. [Ringback tone]
- If announcement is necessary, wait for the third party to answer and announce the call.
- If no announcement is necessary, wait to hear ringback tone.
- Press TRANSFER. [Call is transferred to the third party.]
- Go on-hook.

Using Meet-Me Transfer to Join Two Calls With a Multiappearance Terminal:

- Be sure there is an active call on one appearance.
- Receive another call on an idle appearance. [Voice terminal rings.]
- Press the HOLD button to place the active call on hold. [Green status lamp flutters.]
- Select the ringing appearance. [The new call is now active.]
- Press the TRANSFER button for the newly active call. [An idle appearance is automatically selected.]
- Select the held appearance. [The original call is again active.]
- Press the TRANSFER button for this active call. [The two calls have been transferred to each other.]

CONSIDERATIONS

Transfer Restrictions

A single-appearance voice terminal can transfer one party to a third party. A multiappearance terminal can transfer either one party or two parties to a third party.

Unless Trunk-to-Trunk Transfer is also provided, an incoming or outgoing trunk call cannot be transferred to another trunk call.

System 85 software does not allow Trunk-to-Trunk Transfer unless one of the trunks involved in the transfer is handling *an incoming call* to the switch. If both trunks involved in the transfer were outgoing trunks, neither CO (Central Office) would be responsible to return disconnect supervision to the System 85. So, without this safeguard, the System 85 would have no way of knowing when the transferred call was finished, and could not break down the connection. Therefore, when a voice terminal user desires to connect two parties using two outgoing trunks, the user should establish a 3-party conference, and stay on the connection to maintain local supervision of the call.

Hard and Soft Processor Swaps

A stable transferred call will endure a hard processor swap.

During a hard swap, a voice terminal user cannot transfer the active call.

The Transfer feature operates normally during a soft processor swap.

INTERACTIONS WITH OTHER FEATURES

The following System 85 features affect or are affected by the operation of this feature.

Attendant Call Waiting

Attendant Call Waiting is denied toward an extension with the Transfer feature activated.

Automatic Call Distribution

When an ACD agent transfers a call to another local agent, the transferred call is not considered work-related activity for the second agent. The second agent is not removed from the agent queue.

While an observer (using agent override) is connected to an agent's call, the Transfer feature is denied for use by the agent.

Bridged Call

The TRANSFER button is inoperable during a bridged appearance call for both the controlling voice terminal (extension that originated the bridged call) and the bridged voice terminal.

Call Coverage

The Transfer feature is denied from a multiappearance voice terminal during the Caller Response Interval of call coverage. The switch ignores the button push.

After a call goes to coverage, when the covering user presses the TRANSFER button, the temporary bridged appearance is removed from the principal's voice terminal.

Call Vectoring

Voice terminal users (including ACD agents) can transfer calls to a VDN. When this is done, the transferred-to vector controls call processing for the transferred call. For example, the call could enter an ACD split's queue (including an AUDIX or Message Center queue) or the attendant queue, and be processed according to the vector's programming.

CSMDR (Centralized Station Message Detail Recording)

The last voice terminal on a call is the number recorded by CSMDR.

Data Call Setup

The Transfer feature does not allow the preindication function of the Data Call Setup feature. Consequently, any call requiring preindication (Modem Pooling or DS1 Interface features) fails if using Transfer.

DCS (Distributed Communications System)

In a DCS environment without an Applications Processor, after an internode call transfers, the switch denies activation of Leave Word Calling.

EUCD (Enhanced Uniform Call Distribution)

When an EUCD agent transfers an EUCD call to another agent, the transferred call is not considered work-related activity for the second agent. The 106B status indicator shows the second agent as engaged in non-EUCD activity.

While an observer (using agent override) is connected to an EUCD agent's call, the Transfer feature is denied for use by the agent.

IPA (Interpartition Access)

A voice terminal user (in an extension partition other than Extension Partition 0) can transfer calls to extension numbers within the same partition group or to extensions in Extension Partition 0. When the user tries to transfer a call to any other partition group (using an extension number), the switch returns intercept treatment to the transferring party.

A voice terminal user in Extension Partition 0 is allowed to transfer calls (using an extension number) to any voice terminal in the switch.

Loudspeaker Paging Access

A single-appearance voice terminal user in a 2-party talking connection cannot access Loudspeaker Paging unless an answer-back channel is available.

LWC (Leave Word Calling)

In a DCS environment without APs, after an internode call is transferred, activation of Leave Word Calling is denied.

Music-on-Hold Access

When Music-on-Hold Access is provided, if a multiappearance terminal is transferring a single party, the party receives music after being put on hold. However, if transferring two parties, the parties do not receive music when on hold. Instead, the two held parties maintain a talking connection.

Personal Central Office Line

When a call on a Personal Central Office Line is transferred to another party, the owner of the personal line temporarily loses control of the personal line. The owner cannot place or receive a call on that line until the Transfer call is finished. This can be avoided by setting up a 3-party conference and then placing the conference on hold. Then, at any time, the owner can reenter the connection and request use of the personal line.

Priority Calling

Priority Calling is denied toward a single-appearance terminal with a Transfer in progress.

When the Priority Calling feature is activated toward a multiappearance terminal with a Transfer in progress, the call completes to an idle appearance. If no appearance is idle, the priority call is denied.

Remote Access

A remote access call can be transferred by a local System 85 station user. However, the remote access caller cannot use the Transfer feature.

Restriction—Miscellaneous Trunk Restrictions

A terminal restricted from accessing a trunk group, due to the Miscellaneous Trunk Restriction feature, can be transferred via the Transfer feature to a restricted trunk group. However, the restricted terminal cannot originate a transfer via the Transfer feature to a restricted trunk group.

Restriction—Voice Terminal Restrictions

The Transfer feature may transfer an incoming trunk call to an Inward restricted voice terminal.

The Outward restricted voice terminal can access a public network trunk if the restricted voice terminal calls an unrestricted voice terminal. The unrestricted voice terminal uses the Transfer feature to connect the restricted voice terminal to the public network trunk.

An Origination restricted voice terminal may originate a call from a 2-party connection by first accessing the Transfer feature.

A voice terminal with the Terminal-to-Terminal Only Calling restriction activated can be transferred to the attendant by another voice terminal user via the Transfer feature. A Terminal-to-Terminal Only Calling restricted voice terminal may transfer a call to another voice terminal, but not to the attendant.

Serial Calls

When Serial Calls is in effect, pressing the RECALL button at a local terminal recalls the attendant. Therefore, a terminal user cannot access the Transfer feature during a serial call.

SMDR (Station Message Detail Recording)

The last voice terminal on a call is the number recorded by SMDR.

Tenant Services

A voice terminal user (in an extension partition other than Extension Partition 0) can transfer calls to extension numbers within the same partition or to extensions in Extension Partition 0. When the user tries to transfer a call to any other extension partition (using an extension number), the switch returns intercept treatment to the transferring party.

A voice terminal user in Extension Partition 0 is allowed to transfer calls (using an extension number) to any voice terminal in the switch.

Unattended Console Service—CAAVT (Call Answer From Any Voice Terminal) and Preselected Call Routing

A single-appearance voice terminal user accessing the CAAVT feature or the preselected terminal when Preselected Call Routing is active has access to the Transfer feature even though Transfer might not be assigned to the user's terminal line class of service. The CAAVT user or preselected terminal may direct a call to another local terminal via Transfer. When directing a call to a trunk, the CAAVT user or preselected terminal must use a terminal with Transfer assigned. All multiappearance voice terminals have Transfer capabilities.

Variable Format Call Detail Recording

The call record shows the last voice terminal connected to a Transfer call as the called number.

HARDWARE REQUIREMENTS

None.

FEATURE ADMINISTRATION

Assignment of the Transfer feature is on a line class-of-service basis for single-appearance voice terminals. Multiappearance voice terminals are always provided with the feature. The customer can administer this feature using the SMT (System Management Terminal) or the TCM (Terminal Change Management) feature. This feature can also be administered using CSM (Centralized System Management).

The following are the applicable MAAP and SMT procedures.

MAAP AND SMT PROCEDURES — TRANSFER			
PROCEDURE	**WORD**	**PURPOSE**	**SMT**
000	1	Assigns the voice terminal class of service to an extension number.	Yes
010	1	Assigns the Transfer feature to a voice terminal class of service.	Yes
275	4	Assigns Trunk-to-Trunk Transfer to the system class of service.	Yes

The following are the applicable TCM path names used with the AP 16.

TCM SCREENS — TRANSFER	
PATH NAME	**PURPOSE**
terminal-change class-of-service attributes	Assigns the Conference—Three Party and Transfer features to a voice terminal class of service.
terminal-change extensions attributes	Assigns the class of service to an extension number.

The following are the applicable CSM Command Paths utilizing the **admin** area of TCM or FM.

CSM SCREENS — MASKS TRANSFER		
APPL'N	**OBJECT**	**PURPOSE**
TCM	extension	Assigns the voice terminal class of service to an extension number.
TCM	class-of-service	Assigns the Transfer feature to a voice terminal class of service.
TCM/FM	sys-cos	Assigns Trunk-to-Trunk Transfer to the system class of service.

TRUNK GROUP BUSY/WARNING INDICATORS TO ATTENDANT

DESCRIPTION

This feature provides the attendant with a visual warning, indicating when the number of available trunks in a group diminishes to a preset level. A visual indication is also provided when every trunk in a group is busy.

The Trunk Group Busy and the Trunk Group Warning Indicators are useful when the Attendant Control of Trunk Group Access feature is provided. The warning indicators show the attendant when control of access to trunk groups may be necessary. The busy indicators show the attendant when a trunk in a busy group becomes available for a waiting voice terminal.

Feature History and Development

This feature was first available on System 85 in Release 1. There have been no changes to this feature since Release 1.

USER OPERATIONS

None.

CONSIDERATIONS

Limits

A total of 24 busy trunk-group indicators and 12 warning indicators is provided. A high number of busy or warning indications can indicate a need to rearrange or add trunks.

INTERACTIONS WITH OTHER FEATURES

The following System 85 features affect or are affected by the operation of this feature.

Conference—Attendant Six Party

When the Conference—Attendant Six Party feature is provided, the associated trunk-group warning indicator is lighted when six conferees are connected to the conference circuit. The trunk-group warning indicator extinguishes when less than six conferees connect to a conference circuit and when the attendant releases from the conference. The trunk group warning indicator lights only on the console to which the conference circuit is connected.

Tenant Services

A partitioned switch only updates the lamps associated with a DTGS (Direct Trunk Group Selection) button for the attendant consoles that are allowed to access that specific trunk group.

HARDWARE REQUIREMENTS

None.

FEATURE ADMINISTRATION

Assignment of the Trunk Group Busy/Warning Indicators to Attendant feature is on a per-trunk group basis. This feature is administered using the MAAP. This feature can also be administered using CSM (Centralized System Management).

The following are the applicable MAAP procedures.

MAAP PROCEDURES TRUNK GROUP BUSY/WARNING INDICATORS TO ATTENDANT		
PROCEDURE	**WORD**	**PURPOSE**
200	1	Assigns Direct Trunk Group Selection to the attendant console(s)
202	1	Assigns busy/warning indication to the attendant console(s). Sets the warning level in the adjacent field.

The following is the applicable CSM Command Path utilizing the **admin** area of TCM or FM.

CSM SCREEN — MASK TRUNK GROUP BUSY/WARNING INDICATORS TO ATTENDANT		
APPL'N	**OBJECT**	**PURPOSE**
TCM	console-features	Administers Direct Trunk Group Selection to all attendant consoles on a switch, assigns busy/warning indication to the console(s), and sets the warning level.

TRUNK VERIFICATION—ATTENDANT

DESCRIPTION

This feature gives an attendant the ability to test the operation of individual trunks. The attendant can identify defective trunks and report their condition for servicing. This results in better overall communications.

The type of trunks that can be verified are listed in this feature's Considerations section.

If the trunk is busy, the talking parties hear a warning tone before the attendant enters the call. The warning tone is a 440-hertz tone applied at 15-second intervals. The duration of the first burst of tone is 2 seconds. Thereafter, the duration is a 1/2 second.

Feature History and Development

This feature was first available on System 85 in Release 1. There have been no changes to this feature since Release 1.

USER OPERATIONS

The following are the user operating procedures for this feature.

To Test the Condition of a Trunk

For an idle nontie trunk:

- Press an idle loop button. [ATND lamp lights, and PA lamp goes out.]
- Press VERFY. [VERFY lamp lights.]
- Press START or press a Direct Trunk Group Selection button and skip the next step. [Dial tone]
- Dial the trunk-group access code.
- Dial the trunk number (e.g., ''028''). [Trunk seized, VERFY lamp goes out, ANS lamp lights, and Dial tone heard.]

> **NOTE:** Using an R2 V1 switch, only two digits should be dialed for trunk numbers (e.g., ''06,'' or ''99''). This is because R2 V1 switches cannot have more than 99 trunks per trunk group.

- Dial distant voice terminal extension number. [Ringback tone]
- Distant voice terminal user answers. (The connection is verified and evaluated.)
- After verification, press RELEASE. [ANS and ATND lamp go out, console is released from all trunks and tones, and PA lamp lights.]

For a busy nontie trunk:

- Press an idle loop button. [ATND lamp lights, and PA lamp goes out.]
- Press VERFY. [VERFY lamp lights.]
- Press START or press a Direct Trunk Group Selection button and skip the next step. [Dial tone]
- Dial the trunk-group access code.
- Dial the trunk number (e.g., ‘‘255’’). [Trunk is seized and warning tone is heard by both parties on the active call and the attendant. Attendant is bridged onto the call, VERFY lamp goes out, and ANS lamp lights.] (The connection is verified and evaluated.)
- After verification, press RELEASE. [ANS and ATND lamp go out, console is released from all trunks and tones, and PA lamp lights.]

For a nonautomatic idle tie trunk:

- Press an idle loop button. [ATND lamp lights, and PA lamp goes out.]
- Press VERFY. [VERFY lamp lights.]
- Press START or press a Direct Trunk Group Selection button and skip the next step. [Dial tone]
- Dial the trunk-group access code.
- Dial the trunk number (e.g., ‘‘007’’). [Trunk seized, VERFY lamp goes out, RING lamp lights, and dial tone heard.]
- Dial distant voice terminal extension number. [Ringback tone]
- Distant voice terminal user answers. [RING lamp goes out.] (The connection is verified and evaluated.)
- After verification, press RELEASE. [ATND lamp goes out, console is released from all trunks and tones, and PA lamp lights.]

For a busy tie trunk:

- Press an idle loop button. [ATND lamp lights, and PA lamp goes out.]
- Press VERFY. [VERFY lamp lights.]
- Press START or press a Direct Trunk Group Selection button and skip the next step. [Dial tone]
- Dial the trunk-group access code.
- Dial the trunk number. [Trunk is seized and warning tone is heard by both parties on the active call and the attendant. Attendant is bridged onto the call and VERFY lamp goes out.] (The connection is verified and evaluated.)

- After verification, press RELEASE. [ANS and ATND lamp go out, console is released from all trunks and tones, and PA lamp lights.]

For an automatic idle tie trunk:

- Press an idle loop button. [ATND lamp lights, and PA lamp goes out.]
- Press VERFY. [VERFY lamp lights.]
- Press START or press a Direct Trunk Group Selection button and skip the next step. [Dial tone]
- Dial the trunk-group access code.
- Dial the trunk number. [Trunk seized, VERFY lamp goes out, RING lamp lights, and ringback tone is heard.]
- Distant voice terminal user answers. [RING lamp goes out.] (The connection is verified and evaluated.)
- After verification, press RELEASE. [ATND lamp goes out, console is released from all trunks and tones, and PA lamp lights.]

For a Busy Trunk at a Distant DCS Node:

- Press an idle loop button. [ATND lamp lights, and PA lamp goes out.]
- Press VERFY. [VERFY lamp lights.]
- Press START or press DTGS button to reach the distant node and skip the next step. [Dial tone]
- Dial the tie trunk dial access code to reach the distant node.
- Press VERFY again. [VERFY lamp goes out.]
- Dial the access code of the trunk group to be verified at the distant node.
- Dial the trunk number (e.g., ‘‘173’’). [Trunk is seized and warning tone is heard by both parties on the active call and the attendant. Attendant enters the call.] (The connection is verified and evaluated.)
- After verification, press RELEASE. [Console is released from the trunk and tones, and PA lamp lights.]

CONSIDERATIONS

The following list identifies the Procedure 100, Word 1 trunk types and whether they can be tested.

TRUNK TYPES AND WHETHER THEY CAN BE TESTED		
Code	**Test**	**Trunk Type**
		Special trunks:
2	No	Touch-tone digit
5	No	Conference—Six Party
6	No	Special queue
		All 2-way Advanced Private Line Termination (APLT) trunks:
12	Yes	Delay dial in/(wink start or delay dial) and dial tone out
13	Yes	Wink start in/(wink start or delay dial) and dial tone out
14	Yes	Delay dial in/dial tone out
15	Yes	Wink start in/dial tone out
		Regular Central Office (CO) trunks:
16	Yes, if busy	1-way automatic incoming attendant completing
17	Yes	1-way outgoing DOD
18	Yes	1-way out DOD with party tests
19	Yes	2-way automatic incoming attendant completing/DOD
20	Yes	2-way with party test
		Foreign Exchange (FX) trunks:
21	Yes, if busy	1-way automatic incoming attendant completing
22	Yes	1-way outgoing DOD
23	Yes	1-way out DOD with party test
24	Yes	2-way automatic attendant completing in/DOD
25	Yes	2-way with party test
		Wide Area Telecommunications System (WATS) trunks:
26	Yes, if busy	1-way automatic incoming attendant completing
27	Yes	1-way outgoing DOD or toll terminal access for TSPS
28	Yes	1-way out DOD with party test
		Direct Inward Dialing (DID) trunks:
30	Yes	Immediate start DID
31	Yes	Wink start DID
		Tie trunks:
32	Yes, if busy	1-way in dial repeating
33	Yes	1-way out automatic
34	Yes	1-way dial out repeating
35	Yes, if busy	1-way in automatic
36	Yes	2-way dial repeating both ways
37	Yes	2-way dial repeating in/automatic out
38	Yes	2-way automatic in/dial repeating out
39	Yes	2-way automatic both ways
40	Yes, if busy	1-way in, dial repeating, and delay dial
41	Yes	2-way wink start in/delay dial, wink start out
42	Yes, if busy	1-way in, wink start
43	Yes	1-way out, delay dial, wink start
44	Yes	2-way dial repeating, delay dial in
45	Yes	2-way dial repeating, delay dial in/automatic out

TRUNK TYPES AND WHETHER THEY CAN BE TESTED (Contd)		
Code	**Test**	**Trunk Type**
		Tie trunks (Contd):
46	Yes	2-way dial repeating in/delay dial, or wink start out
47	Yes	2-way dial repeating delay dial in/delay dial, or wink start out
		Special trunks and interfaces:
50	Yes	Remote access; 2-way dial tone in/ground start and dial tone out
51	No	Telephone Dictation Interface
52	No	Recorded Announcement Interface
53	No	Code Calling Interface
54	No	Loudspeaker Paging Interface
55	No	Touch-tone sender
57	No	CAS release link trunk-outgoing from branch; 1-way automatic out
58	No	ANI Interface
62	No	Music-on-Hold Interface
65	No	SN241 Contact Interface
66	No	CAS release link trunk-incoming at main; 1-way automatic in
67	No	Audio
68	No	UCD delay recorded announcement trunk (R2 V1 only)
		Special tie trunks (Main/Satellite):
70	Yes, if busy	1-way in immediate start
71	No	1-way out immediate start
72	Yes	2-way immediate start both ways
73	Yes, if busy	1-way in wink start
74	No	1-way out wink start
75	Yes	2-way wink start both ways
76	Yes, if busy	1-way in delay dial
77	No	1-way out delay dial
78	Yes	2-way delay dial both ways
		Special trunks:
90	No	ACD first announcement
91	No	ACD second announcement
92	No	ACD origin announcement
		Data Trunk types:
100	No	Tone detector
101	No	Analog data modem pool
102	No	Digital data modem pool
103	No	Host access PDM
104	No	Host access TDM
105	No	AP32 DCPI
106	No	EIA 4 port
107	No	ISN/EIA of port
108	No	DMI wink in/automatic out
109	No	DMI wink in/wink out

TRUNK TYPES AND WHETHER THEY CAN BE TESTED (Contd)		
Code	**Test**	**Trunk Type**
120	Maybe	ISDN dynamic
		Special Loop Start Central Office (CO) trunks:
316	No	1-way automatic in
317	No	1-way outgoing DOD
319	No	2-way automatic in/DOD
		Special Loop Start FX trunks:
321	No	1-way automatic in
322	No	1-way outgoing DOD
324	No	2-way automatic in/DOD
		Special Loop Start WATS trunks:
326	No	1-way automatic in
327	No	1-way outgoing DOD/or toll terminal access for TSPS
		Special Loop Start Remote Access trunks:
350	No	Remote Access

Maintenance Busy Trunks

The attendant cannot take a defective trunk out of service (maintenance busy-out). However, a designated voice terminal using the Trunk Verification—Voice Terminal feature can be used for this purpose. Also a trunk that has been maintenance busied-out can't be verified.

Verify Button and Lamp

When the switch is equipped with both the Trunk Verification by Attendant and the Busy Verification of Lines features, the same VERFY button and lamp are used for both features.

Reorder Tone

If the attendant receives reorder tone and the BUSY lamp lights, this indicates that the trunk is:

- Connected to a line that has data protection active
- Not in a stable state within the switch
- Not in a 2-party connection
- Connected to an attendant console (unless the calling party is a remote access trunk)
- Being held in a Call Park state.

The attendant should wait a few seconds and retry the check.

Intercept Tone

The switch returns intercept tone when the attendant tries to access an invalid dial access code or test an invalid trunk type. The VERFY lamp also extinguishes after attempting to test an invalid trunk type. The switch returns intercept tone when attempting to access an idle 1-way incoming trunk.

Hard and Soft Processor Swaps

If an attendant is verifying a stable trunk connection when a hard processor swap occurs, this 3-party connection will endure the hard swap.

An attendant cannot verify a trunk during a hard processor swap.

The Trunk Verification—Attendant feature operates normally during a soft processor swap.

INTERACTIONS WITH OTHER FEATURES

The following System 85 features affect or are affected by the operation of this feature.

Attendant Call Waiting

If the trunk is being held or answered by a terminal using the answer-hold code of Attendant Call Waiting, TVA (Trunk Verification—Attendant) is denied.

ACA (Automatic Circuit Assurance)

A distant trunk which has an ACA record associated will be updated.

Call Park

A trunk that is in call park cannot be busy verified using TVA.

Call Waiting

If the trunk is being held or answered by a terminal using the answer-hold code of Call Waiting, TVA is denied.

Conference—Attendant Six Party

Trunk Verification may not be used toward a trunk that is involved in an attendant conference connection.

Conference—Three Party

TVA is denied when attempted toward a conference call established by the Conference—Three Party feature.

Data Protection

If the trunk under test is data protected or connected to a terminal which is data protected, TVA is denied.

DCS (Distributed Communications System)

In a DCS environment, an attendant at one node can verify a trunk in another node. The procedures for verifying distant trunks are slightly different than the usual verification procedures (see User Operations.)

Hold

If the trunk to be verified is being held by the Hold feature, TVA is denied.

ISDN (Integrated Services Digital Network)/PRI (Primary Rate Interface)

The trunk verification features work in the same way for ISDN trunks as they do for other types of trunks, except for the ISDN Dynamic trunk types. These trunks reflect a **default** trunk type based on the far end of the trunk connection.

Malicious Call Trace

The Trunk Verification—Attendant can assist in tracing malicious calls that originate from or tandem through distant switches in the private network. After an attendant at the distant switch is called by the controlling attendant at the local switch, the distant attendant can enter the call using the Trunk Verification—Attendant feature and then activate Malicious Call Trace at the distant end.

> **NOTE:** Since the warning tone provided by trunk verification could arouse suspicion by the malicious caller, the verification should be deactivated as quickly as possible.

Modem Pooling

The Trunk Verification—Attendant feature cannot be used to test modem pooling trunk types (types 101 and 102). The Trunk Verification—Voice Terminal feature can, however, be used for this purpose.

Override

If a 3-way connection has been established using the Override feature, TVA is denied.

Priority Calling

If the trunk is being held or answered by a terminal using the answer-hold code of Priority Calling, TVA is denied.

Serial Calls

TVA is denied toward a trunk involved in a serial call.

Tenant Services

An attendant (in a partition other than Attendant Partition 0) is allowed to verify trunks within trunk groups that are assigned to that attendant's partition. When this is done, the feature operates normally. However, when an attendant attempts to verify a trunk that is not within a trunk group assigned to the partition, the switch will return intercept treatment to the attendant.

An attendant in Attendant Partition 0 is allowed to verify any trunk that can otherwise be verified using this feature.

Trunk Verification—Voice Terminal

During a 3-way connection established using this feature, TVA is denied.

HARDWARE REQUIREMENTS

None.

FEATURE ADMINISTRATION

Assignment of the Trunk Verification by Attendant feature is on a per-system basis. This feature is administered using the MAAP. This feature can also be administered using CSM (Centralized System Management).

The following are the applicable MAAP procedures.

MAAP PROCEDURES — TRUNK VERIFICATION—ATTENDANT		
PROCEDURE	**WORD**	**PURPOSE**
100	1	Assigns either total or attendant access only to a trunk group using the trunk dial access code.
150	1	Assigns trunks to the trunk group.
177	1	Displays the trunk number for trunks within a trunk group (by dial access code).
200	1	Enables the Trunk Verification by Attendant feature.
202	1	Assigns the Direct Trunk Group Selection keys.
203	1	Assigns the VERFY button to the attendant console(s). The applicable encode is as follows: 7 VERFY Button.

The following are the applicable CSM Command Paths utilizing the **admin** area of TCM or FM.

CSM SCREENS — MASKS TRUNK VERIFICATION — ATTENDANT		
APPL'N	**OBJECT**	**PURPOSE**
FM	trk-grp	Assigns either total or attendant access only to a trunk group using the trunk dial access code, and assigns trunks to the trunk group.
TCM	console-features	Enables the Trunk Verification by Attendant feature.
TCM	direct-trk-grp-keys	Assigns the Direct Trunk Group Selection keys.
TCM	control-keys	Assigns the VERIFY button to the attendant console(s).

TRUNK VERIFICATION—VOICE TERMINAL

DESCRIPTION

This feature gives the user of a designated voice terminal the ability to test the operation of individual trunks. The user can identify and remove defective trunks from service. The defective trunk can be repaired and returned to service quickly. As a result, better communications service is provided.

The type of trunks that can be verified are listed in this feature's Considerations section.

If a trunk is busy, the talking parties hear a warning tone before the testing party is added to the connection. The warning tone is a 440-hertz tone applied at 15-second intervals. The duration of the first burst of tone is 2 seconds. Thereafter, the duration is a 1/2 second.

Trunk verification for a voice terminal can be performed at a remote switch using a dial repeating tie trunk.

Feature History and Development

This feature was first available with System 85 in Release 1. Subsequent enhancements include the following:

- Two-way tie trunks can be busied out. First available in Release 2, Version 3.

USER OPERATIONS

The following are the user operating procedures for this feature.

To Activate Trunk Verification

For a local nonautomatic trunk that is idle:

- Go off-hook. [Dial tone]
- Dial the trunk test access code. [Second dial tone]
- Dial the trunk-group access code.
- Dial the trunk number (e.g., ‘‘025’’). [Trunk seized, and dial tone is heard.]

  NOTE: Using an R2 V1 switch, only two digits should be dialed for trunk numbers (e.g., ‘‘07,’’ or ‘‘99’’). This is because R2 V1 switches cannot have more than 99 trunks per trunk group.
- Dial a voice terminal number. [Ringback tone]
- The called party answers. (The connection is verified and evaluated.)
- After verification, go on-hook.

For a local automatic trunk that is idle:

- Go off-hook. [Dial tone]
- Dial the trunk test access code. [Second dial tone]
- Dial the trunk-group access code.
- Dial the trunk number (e.g., ‘‘255’’). [Trunk seized, and ringback tone is heard.]
- When the attendant answers, ask the attendant to dial a voice terminal number. [Ringback tone]
- The called party answers. (The connection is verified and evaluated.)
- After verification, go on-hook.

For a local trunk that is busy:

- Go off-hook. [Dial tone]
- Dial the trunk test access code. [Second dial tone]
- Dial the trunk-group access code.
- Dial the trunk number (e.g., ‘‘004’’). [Trunk is seized. Warning tone is heard by both parties on the active call and the testing voice terminal. Voice terminal is bridged onto the call.] (The connection is verified and evaluated.)
- After verification, go on-hook.

For a local Modem Pooling conversion resource that is idle:

— The digital voice terminal user should:

- Go off-hook. [Dial tone]
- Dial the trunk test access code. [Second dial tone]
- Dial the access code of the *digital* Modem Pooling trunk group. [Third dial tone]
- Dial the trunk number of the Modem Pooling member. [Fourth dial tone]
- Dial the number of an off-premises host computer. [Ringback, followed by ready tone.]
- Press the DATA button on your digital voice terminal. [Login prompt from host computer]
- Go on-hook.
- After verification, press the DISCONNECT button on the data module

  or

- Press BREAK on the data terminal’s keyboard.

For a nonautomatic tie trunk at a remote switch that is idle:

- Go off-hook. [Dial tone]
- Dial the tie trunk access code. [Second dial tone]
- Dial the trunk test access code. [Third dial tone]
- Dial the trunk-group access code.
- Dial the trunk number. [Trunk is seized, and dial tone is heard.]
- Dial a voice terminal number. [Ringback tone]
- The called party answers. (The connection is verified and evaluated.)
- After verification, go on-hook.

For an automatic tie trunk at a remote switch that is idle:

- Go off-hook. [Dial tone]
- Dial the tie trunk access code. [Second dial tone]
- Dial the trunk test access code. [Third dial tone]
- Dial the trunk-group access code.
- Dial the trunk number. [Trunk is seized, and ringback tone is heard.]
- When the attendant answers, ask the attendant to dial the voice terminal number. [Ringback tone]
- The called party answers. (The connection is verified and evaluated.)
- After verification, go on-hook.

To Remove (Maintenance Busy) a Defective Trunk From Service:

- Go off-hook. [Dial tone]
- Dial the maintenance busy access code. [Second dial tone]
- Dial the trunk-group access code.
- Dial the trunk number. (If there is an active call on the trunk, it is disconnected.) [Confirmation tone]
- Go on-hook.

To Make (Maintenance Unbusy) a Trunk Available:

- Go off-hook. [Dial tone]
- Dial the maintenance unbusy access code. [Second dial tone]
- Dial the trunk-group access code.
- Dial the trunk number. [Confirmation tone]
- Go on-hook.

CONSIDERATIONS

The following list identifies the Procedure 100, Word 1 trunk types and whether they can be tested.

TRUNK TYPES AND WHETHER THEY CAN BE TESTED		
Code	**Test**	**Trunk Type**
		Special trunks:
2	No	Touch-tone digit
5	No	Conference—Six Party
6	No	Special queue
		All 2-way Advanced Private Line Termination (APLT) trunks:
12	Yes	Delay dial in/(wink start or delay dial) and dial tone out
13	Yes	Wink start in/(wink start or delay dial) and dial tone out
14	Yes	Delay dial in/dial tone out
15	Yes	Wink start in/dial tone out
		Regular Central Office (CO) trunks:
16	No	1-way automatic incoming attendant completing
17	Yes	1-way outgoing DOD
18	Yes	1-way out DOD with party tests
19	Yes	2-way automatic incoming attendant completing/DOD
20	Yes	2-way with party test
		Foreign Exchange (FX) trunks:
21	No	1-way automatic incoming attendant completing
22	Yes	1-way outgoing DOD
23	Yes	1-way out DOD with party test
24	Yes	2-way automatic attendant completing in/DOD
25	Yes	2-way with party test
		Wide Area Telecommunications System (WATS) trunks:
26	No	1-way automatic incoming attendant completing
27	Yes	1-way outgoing DOD or toll terminal access for TSPS
28	Yes	1-way out DOD with party test
		Direct Inward Dialing (DID) trunks:
30	Yes	Immediate start DID
31	Yes	Wink start DID

TRUNK TYPES AND WHETHER THEY CAN BE TESTED (Contd)		
Code	**Test**	**Trunk Type**
		Tie trunks:
32	No	1-way in dial repeating
33	Yes	1-way out automatic
34	Yes	1-way dial out repeating
35	No	1-way in automatic
36	Yes	2-way dial repeating both ways
37	Yes	2-way dial repeating in/automatic out
38	Yes	2-way automatic in/dial repeating out
39	Yes	2-way automatic both ways
40	No	1-way in, dial repeating, and delay dial
41	Yes	2-way wink start in/delay dial, wink start out
42	No	1-way in, wink start
43	Yes	1-way out, delay dial, wink start
44	Yes	2-way dial repeating, delay dial in
45	Yes	2-way dial repeating, delay dial in/automatic out
46	Yes	2-way dial repeating in/delay dial, or wink start out
47	Yes	2-way dial repeating delay dial in/delay dial, or wink start out
		Special trunks and interfaces:
50	Yes	Remote access; 2-way dial tone in/ground start and dial tone out
51	No	Telephone Dictation Interface
52	No	Recorded Announcement Interface
53	No	Code Calling Interface
54	No	Loudspeaker Paging Interface
55	No	Touch-tone sender
57	No	CAS release link trunk-outgoing from branch; 1-way automatic out
58	No	ANI Interface
62	No	Music-on-hold Interface
65	No	SN241 Contact Interface
66	No	CAS release link trunk-incoming at main; 1-way automatic in
67	No	Audio
68	No	UCD delay recorded announcement trunk (R2 V1 only)
		Special tie trunks (Main/Satellite):
70	No	1-way in immediate start
71	No	1-way out immediate start
72	Yes	2-way immediate start both ways
73	No	1-way in wink start
74	No	1-way out wink start
75	Yes	2-way wink start both ways
76	No	1-way in delay dial
77	No	1-way out delay dial
78	Yes	2-way delay dial both ways

TRUNK TYPES AND WHETHER THEY CAN BE TESTED (Contd)		
Code	**Test**	**Trunk Type**
		Special trunks:
90	No	ACD first announcement
91	No	ACD second announcement
92	No	ACD origin announcement
		Data Trunk types:
100	No	Tone detector
101	Yes*	Analog data modem pool
102	Yes*	Digital data modem pool
103	No	Host access PDM
104	No	Host access TDM
105	No	AP32 DCPI
106	No	EIA 4 port
107	No	ISN/EIA of port
108	No	DMI wink in/automatic out
109	No	DMI wink in/wink out
120	Maybe	ISDN dynamic
		Special Loop Start Central Office (CO) trunks:
316	No	1-way automatic in
317	No	1-way outgoing DOD
319	No	2-way automatic in/DOD
		Special Loop Start FX trunks:
321	No	1-way automatic in
322	No	1-way outgoing DOD
324	No	2-way automatic in/DOD
		Special Loop Start WATS trunks:
326	No	1-way automatic in
327	No	1-way outgoing DOD/or toll terminal access for TSPS
		Special Loop Start Remote Access trunks:
350	No	Remote Access

Testing Terminal Types

Only the following terminals can use this feature:

- A single designated voice terminal
- A remote maintenance terminal
- A backup control voice terminal associated with (CAS) Centralized Attendant Service.

Idle 1-way Incoming Trunk

An idle 1-way incoming trunk cannot be seized and tested. The trunk must be busy, and bridge-on must be allowed for the trunk group.

Intercept Tone

* Can be tested (by special procedures) on Version 3 and 4 switches. Cannot be tested on earlier switches.

Intercept tone is heard if trunk verification is not performed from the designated voice terminal, if an invalid trunk-group access code is dialed, or the trunk is not of the type that can be put on maintenance busy.

Reorder Tone

Reorder tone is heard if the trunk is in an unstable, transient condition. The user should wait a few seconds and retry the check.

Busy Tone

Busy tone is heard for the following reasons:

- The trunk under test belongs to a trunk group which has bridge-on restriction.
- The trunk under test is setting up a call.
- The trunk under test has a 3-way call.
- The trunk under test is a busy tie trunk.
- An RLT under test is busy.
- The call on the trunk under test is data restricted.
- The call on the trunk under test is a trunk-to-trunk call. This feature cannot test a trunk-to-trunk connection.

Tandem Tie Trunk Switching

In order to test a remote trunk, tandem tie trunk switching at a distant switch must be administered using Procedure 275, Word 1.

Busying Out Trunks

A trunk cannot be busied-out from another node.

If a 2-way trunk is busied-out, it has to be busied-out from both ends.

Hard and Soft Processor Swaps

If the user of the designated voice terminal is verifying a stable trunk connection when a hard processor swap occurs, this 3-party connection will endure the hard swap.

The voice terminal user cannot verify a trunk during a hard processor swap.

The Trunk Verification—Voice Terminal feature operates normally during a soft processor swap.

INTERACTIONS WITH OTHER FEATURES

The following System 85 features affect or are affected by the operation of this feature.

Attendant Call Waiting

If the trunk is being held or answered by a terminal using the answer-hold code of Attendant Call Waiting, TVVT (Trunk Verification—Voice Terminal) is denied.

Call Park

A trunk that is in call park cannot be busy verified using the TVVT feature.

Call Vectoring

Entering a VDN in Procedure 285 as the designated internal extension or the remote maintenance terminal for Trunk Verification is denied. When this is attempted, an administration error will occur.

Call Waiting

If the trunk is being held or answered by a terminal using the answer-hold code of Call Waiting, TVVT is denied.

Conference—Attendant Six Party

Trunk Verification may not be used toward a trunk that is involved in an attendant conference connection.

Conference—Three Party

If a conference call has been established using Conference—Three Party, TVVT is denied.

Data Protection

If the trunk under test is data protected or connected to a terminal which is data protected, TVVT is denied.

Hold

If the trunk to be verified is being held by the Hold feature, TVVT is denied.

ISDN (Integrated Services Digital Network)/PRI (Primary Rate Interface)

The trunk verification features work in the same way for ISDN trunks as they do for other types of trunks, except for the ISDN Dynamic trunk types. These trunks reflect a **default** trunk type based on the far end of the trunk connection.

Last Number Dialed

The Last Number Dialed feature does not store or redial trunk-test dial sequences. Once a trunk has been verified, redialing the digit sequence would not be useful.

Loudspeaker Paging Access

A Loudspeaker Paging trunk cannot be tested.

Modem Pooling

The Trunk Verification—Voice Terminal feature can be used to test Modem Pooling conversion resources on R2 V3 and later switches.

When keyboard dialing is used to place a data call, the System 85 automatically reserves a Modem Pooling conversion resource and, if necessary, inserts the resource into the connection. As the switch reserves a resource, the *digital* Modem Pooling trunk-group number and the individual trunk number of the selected conversion resource are displayed in the RINGING call-progress message. In response to trouble reports, these values (after converting the trunk-group number to the trunk-group access code), can be used to verify the Modem Pooling conversion resource.

Override

If a 3-way connection has been established using the Override feature, TVVT is denied.

Priority Calling

If the trunk is being held or answered by a terminal using the answer-hold code of Priority Calling, TVVT is denied.

Serial Calls

TVVT is denied toward a trunk involved in a serial call.

Tenant Services

The Trunk Verification—Voice Terminal feature is unaffected in a partitioned switch. The user of either the internal or the remote designated voice terminal can verify, maintenance busy, or maintenance unbusy any trunk that can otherwise be verified using this feature.

The designated terminal(s) can reside in any partition, but it is strongly recommended that these terminals be assigned to Extension Partition 0.

Trunk Verification—Attendant

During a 3-way connection established using this feature, TVVT is denied.

HARDWARE REQUIREMENTS

The TELTONE M106-05 Remote Access Unit can be provided as an option to customers which have control over both ends of one or more 2-way tie trunks, such as with an Electronic Tandem Network (ETN). This allows the user to verify and/or maintenance busy/unbusy both ends from a central location.

One unit must be provided at each system requiring remote testing. The distant end of the trunk is tested or busied/unbusied by dialing up the remote access unit and patching through to the TVVT feature. The local end is tested or busied/unbusied normally.

FEATURE ADMINISTRATION

Assignment of the Trunk Verification by Voice Terminal feature is on a system basis. The customer can partially administer this feature using the SMT (System Management Terminal) or the TCM (Terminal Change Management) feature. This feature can also be administered using CSM (Centralized System Management).

The following are the applicable MAAP and SMT procedures.

MAAP AND SMT PROCEDURES — TRUNK VERIFICATION—VOICE TERMINAL			
PROCEDURE	**WORD**	**PURPOSE**	**SMT**
100	1	Assigns either total or attendant access only to a trunk group using the trunk dial access code.	No
103	—	Assigns bridge-on capability to a trunk group for use in trunk verification.	Yes
285	—	Assigns a designated internal extension and/or a remote maintenance terminal for trunk verification.	Yes
350	1	Assigns the first digit of the feature dial access codes (if required).	No
350	2	Assigns the Trunk Test and Maintenance Busy dial access codes. The applicable encodes are as follows: 42 Maintenance busy a trunk 43 Maintenance unbusy a trunk 44 Trunk test from a terminal.	No

The following is the applicable TCM path name used with the AP 16.

TCM SCREEN — TRUNK VERIFICATION—VOICE TERMINAL	
PATH NAME	**PURPOSE**
terminal-change system parameters (select the Access-Codes option)	Assigns a designated internal extension for trunk verification.

The following are the applicable CSM Command Paths utilizing the **admin** area of TCM or FM.

CSM SCREENS — MASKS TRUNK VERIFICATION — VOICE TERMINAL		
APPL'N	**OBJECT**	**PURPOSE**
FM	trk-grp	Assigns either total or attendant access only to a trunk group using the trunk dial access code, and assigns bridge-on capability to a trunk group for use in trunk verification.
TCM/FM	sys-cos	Assigns a designated internal extension for a for a remote maintenance terminal for trunk verification.
TCM/FM	first-digit	Assigns the first digit of the feature dial access codes (if required).
TCM/FM	dial-access-code	Assigns the Trunk Test and Maintenance Busy dial access codes.

TRUNK-TO-TRUNK CONNECTIONS

DESCRIPTION

This feature allows an attendant to connect an incoming or outgoing trunk call to an outgoing trunk. The attendant console holds outgoing trunk-to-outgoing trunk connections in order to monitor the connection and release the trunk when the call is finished.

Local organizations can reduce costs by using the toll facilities [e.g., WATS, FX (foreign exchange), CO (central office), or tie trunk facility] at a central location. Incoming local calls can be connected to toll facilities, to local organizations, or extended to remote locations by the local attendant.

For example, a sales person can call an attendant using the LDN (listed directory number) and request a business call using this feature. The call can be extended to a distant destination using a toll facility.

An attendant can also establish a trunk-to-trunk connection between two employees working away from the home office. The attendant can call one employee over a trunk and ask the employee to stand by for the second party. The attendant would then call the second employee over another trunk and inform the employee of the call. The attendant can then connect the two employees. The call is held at the attendant console.

Feature History and Development

This feature was first available on System 85 in Release 1. There have been no changes to this feature since Release 1.

USER OPERATIONS

The following are the user operating procedures for this feature.

To Extend a Incoming Trunk Call to an Outgoing Trunk

Without direct trunk group selection buttons when an automatic outgoing tie trunk isn't accessed:

- Be sure there is an outside call. [ATND lamp and ICI display are lit.]
- Press START. [The SPLIT lamp lights, the calling party is split from attendant, and dial tone is heard.]
- Dial the appropriate trunk access code. [The ANS lamp lights, and second dial tone is heard.]

- Dial the desired number. (If AAR or ARS are used, dialing an authorization code might be necessary.) [Ringback tone]
- Press RELEASE. [The SPLIT, ANS, and ATND lamps go out, the ICI display goes out, and the PA lamp lights.]
- Calling party is connected to the dialed number via an incoming trunk-to-outgoing trunk connection. [Ringback tone is heard by the calling party.]

Without direct trunk group selection buttons when an automatic outgoing tie trunk is accessed:

- Be sure there is an outside call. [ATND lamp and ICI display are lit.]
- Press START. [The SPLIT lamp lights, the calling party is split from the attendant, and dial tone is heard.]
- Dial the appropriate trunk access code. [The ANS lamp lights, and second dial tone is heard.]
- An automatic outgoing tie trunk is accessed. [Ringback tone is heard, and RING lamp lights.]
- Attendant at the distant facility answers and extends the call. [The RING lamp goes out, the ANS lamp lights, and ringback tone is heard by the attendant.]
- Press RELEASE. [The SPLIT, ANS, and ATND lamps go out, the ICI display goes out, and the PA lamp lights.]
- Calling party is connected to the dialed extension via an incoming trunk-to-outgoing trunk connection. [Ringback tone is heard by the calling party.]

With direct trunk group selection buttons when an automatic outgoing tie trunk isn't accessed:

- Be sure there is an outside call. [ATND lamp and ICI display are lit.]
- Press the appropriate trunk group button. [The SPLIT and ANS lamps light, and the calling party is split away from the attendant.]
- Dial the desired number. (If AAR or ARS is used, dialing an authorization code might be necessary.) [Ringback tone]
- Press RELEASE. [The SPLIT, ANS, and ATND lamps go out, the ICI display goes out, and the PA lamp lights.]
- Calling party is connected to the dialed number via an incoming trunk-to-outgoing trunk connection. [Ringback tone is heard by the calling party.]

With direct trunk group selection buttons when an automatic outgoing tie trunk is accessed:

- Be sure there is an outside call. [ATND lamp and ICI display are lit.]
- Press the appropriate trunk group selection button. [The SPLIT and ANS lamps light, and calling party is split away from the attendant.]
- An automatic outgoing tie trunk is accessed. [Ringback tone is heard, and RING lamp lights.]
- Attendant at the distant facility answers and extends the call. [The RING lamp goes out, the ANS lamp lights, and the ringback tone is heard by the attendant.]
- Press RELEASE. [The SPLIT, ANS, and ATND lamps go out, the ICI display goes out, and the PA lamp lights.]
- Calling party is connected to the dialed extension via an incoming trunk-to-outgoing trunk connection. [Ringback tone is heard by the calling party.]

To Connect an Outgoing Trunk Call to an Outgoing Trunk

Without direct trunk group selection buttons when an automatic outgoing tie trunk isn't accessed:

- Press an idle loop button. [PA lamp goes out, and ATND lamp lights.]
- Press START. [Dial tone]
- Dial the appropriate outgoing trunk access code. [ANS lamp lights, and second dial tone is heard.]
- Dial the desired first trunk party number. (If AAR or ARS is used, dialing an authorization code might be necessary.) [Ringback tone]
- When the called party answers, request the called party to stand by for the call from the second trunk party.
- Press START. [ANS lamp goes out, SPLIT lamp lights, the called party is split away from the attendant, and the attendant hears dial tone.]
- Dial the appropriate outgoing trunk access code for the second trunk group. [ANS lamp lights, and second dial tone is heard.]
- Dial the desired second trunk party number. (If AAR or ARS is used, dialing an authorization code might be necessary.) [Ringback tone]
- When the called party answers, request the called party to stand by for the call from the first trunk party.
- Press HOLD. (The attendant can handle other calls.) [ATND and SPLIT lamps go out, HOLD lamp lights, and the first and second trunk parties are connected. If no calls are waiting to be answered, the PA lamp lights.]

Without direct trunk group selection buttons when an automatic outgoing tie trunk is accessed:

- Press an idle loop button. [PA lamp goes out, and ATND lamp lights.]
- Press START. [Dial tone]
- Dial the appropriate outgoing trunk access code. [ANS lamp lights, and second dial tone is heard.]
- An automatic outgoing tie trunk is accessed. [Ringback tone is heard, and RING lamp lights.]
- Attendant at the distant facility answers and extends the call. [The RING lamp goes out, the ANS lamp lights, and ringback tone is heard by the attendant.]
- When the called party answers, request the called party to stand by for the call from the second trunk party.
- Press START. [ANS lamp goes out, SPLIT lamp lights, the called party is split away from the attendant, and the attendant hears dial tone.]
- Dial the appropriate outgoing trunk access code. [ANS lamp lights, and second dial tone is heard.]
- An automatic outgoing tie trunk is accessed. [Ringback tone is heard, and RING lamp lights.]
- Attendant at the distant facility answers and extends the call. [The RING lamp goes out, the ANS lamp lights, and ringback tone is heard by the attendant.]
- When the called party answers, request the called party to stand by for the call from the first trunk party.

- Press HOLD. (The attendant can handle other calls.) [ATND and SPLIT lamps go out, HOLD lamp lights, and the first and second trunk parties are connected. If no calls are waiting to be answered, the PA lamp lights.]

With direct trunk group selection buttons:

- Press an idle loop button. [PA lamp goes out, and ATND lamp lights.]
- Press the appropriate outgoing trunk group button. [ANS lamp lights, and dial tone is heard.]
- Dial the desired first trunk party number. (If AAR or ARS is used, dialing an authorization code might be necessary.) [Ringback tone]
- When the called party answers, request the called party to stand by for the call from the second trunk party.
- Press the appropriate outgoing trunk group button. [SPLIT lamp lights, the called party is split away from the attendant, and dial tone is heard.]
- Dial the desired second trunk party number. (If AAR or ARS is used, dialing an authorization code might be necessary.) [Ringback tone]
- When the called party answers, request the called party to stand by for the call from the first trunk party.
- Press HOLD. (The attendant can handle other calls.) [ATND and SPLIT lamps go out, HOLD lamp lights, and the first and second trunk parties are connected. If no calls are waiting to be answered, the PA lamp lights.]

With direct trunk group selection buttons when an automatic outgoing tie trunk is accessed:

- Press an idle loop button. [PA lamp goes out, and ATND lamp lights.]
- Press the appropriate outgoing trunk group button. [ANS lamp lights, and dial tone is heard.]
- An automatic outgoing tie trunk is accessed. [Ringback tone is heard, and RING lamp lights.]
- Attendant at the distant facility answers and extends the call. [The RING lamp goes out, the ANS lamp lights, and the ringback tone is heard by the attendant.]
- When the called party answers, request the called party to stand by for the call from the second trunk party.
- Press the appropriate outgoing trunk group button. [SPLIT lamp lights, the called party is split away from the attendant, and dial tone is heard.]
- An automatic outgoing tie trunk is accessed. [Ringback tone is heard, and RING lamp lights.]
- Attendant at the distant facility answers and extends the call. [The RING lamp goes out, the ANS lamp lights, and the ringback tone is heard by the attendant.]
- When the called party answers, request the called party to stand by for the call from the first trunk party.
- Press HOLD. (The attendant can handle other calls.) [ATND and SPLIT lamps go out, HOLD lamp lights, and the first and second trunk parties are connected. If no calls are waiting to be answered, the PA lamp lights.]

To Monitor an Outgoing Trunk Call to an Outgoing Trunk:

- Be sure an outgoing trunk call has been extended to another outgoing trunk. [HOLD lamp is lit for the appropriate loop button.]
- Press the appropriate loop button. [HOLD lamp goes out, and ATND lamp lights.]
- To allow the call to continue unmonitored, press HOLD. [ATND lamp goes out, and HOLD lamp lights. If no calls are waiting to be answered, the PA lamp lights.]

To Release an Outgoing Trunk Call to Another Trunk if Disconnect Supervision is Not Present:

- Be sure the parties have gone on-hook.
- Press the appropriate loop button. [HOLD lamp goes out, and ATND lamp lights.]
- To disconnect the second trunk, press CANC. [ANS lamp goes out.]
- To disconnect the first trunk, press RELEASE. [ATND lamp goes out.]

CONSIDERATIONS

Intercept Tone

Intercept tone is heard if an invalid access code is dialed or if the incoming trunk is restricted from accessing the selected trunk.

Calls in Queue

Music or a recorded message is heard if the call is placed in queue after dialing the trunk access code.

Undesirable Connections

Because of customer needs or traffic requirements, some trunk-to-trunk connections may be considered undesirable. These connections can be restricted by service technicians via the MAAP (Maintenance and Administration Panel). In this way, a trunk group can be restricted from connecting to other trunk groups.

INTERACTIONS WITH OTHER FEATURES

The following System 85 features affect or are affected by the operation of this feature.

Data Communications Access

Trunk-to-trunk restrictions applied to DCA trunks restrict trunk calls from direct access to the host computer. Attendant assistance is required to reach DCA ports from the off-premises locations. These attendant-extended calls are denied Data Protection.

Tenant Services

An attendant (in a partition other than Attendant Partition 0) has limited access to the Trunk-to-Trunk Connections feature. When both trunk groups involved in the connection are assigned to the attendant's partition, then the Trunk-to-Trunk Connections feature is allowed. The switch returns intercept treatment to the attendant when this condition is not met.

An attendant in Attendant Partition 0 has full access to the Trunk-to-Trunk Connections feature. These attendants are allowed to connect any two trunks in the switch.

RESTRICTING FEATURE USE

Specific Trunk-to-Trunk Connections can be restricted by applying trunk-to-trunk restriction to the trunk group. The service technician performs this operation using the MAAP.

HARDWARE REQUIREMENTS

None.

FEATURE ADMINISTRATION

Assignment of the Trunk-to-Trunk Connection feature is on a per-system class-of-service basis. The customer can partially administer this feature using the SMT (System Management Terminal). This feature can also be administered using CSM (Centralized System Management).

The following are the applicable MAAP and SMT procedures.

MAAP AND SMT PROCEDURES — TRUNK-TO-TRUNK CONNECTIONS			
PROCEDURE	**WORD**	**PURPOSE**	**SMT**
110	—	Assigns restricted trunk dial access codes to trunk groups.	No
111	—	Administers restricted trunk groups for trunk-to-trunk restrictions.	No
275	1	Assigns the Trunk-to-Trunk Connections feature to the system class of service.	Yes
275	4	Assigns trunk-to-trunk transfer to the system class of service.	Yes

The following are the applicable CSM Command Paths utilizing the **admin** area of TCM or FM.

CSM SCREENS — MASKS TRUNK-TO-TRUNK CONNECTIONS		
APPL'N	**OBJECT**	**PURPOSE**
FM	tandem-trk-trk	Associates trunk group DACs with restricted dial code entry numbers for the tandem-tie feature and the trunk-to-trunk connection feature. Restricts other trunk groups on the switch from using these restricted facilities. The following options are available: Build the tandem-tie restriction list, build the trunk-to-trunk connection restriction list, or restrict other facilities (trunk groups) from accessing the restricted trunk groups.
TCM/FM	sys-cos	Assigns the trunk-to-trunk connections feature to system class of service. Assigns trunk-to-trunk transfer to the system class of service.

UNATTENDED CONSOLE SERVICE — ALTERNATE CONSOLE POSITION

DESCRIPTION

This feature is one of three Unattended Console Service features. These features are designed to work together to provide flexibility and enhance attendant services under a wide variety of circumstances. While designed to work together, each of the Unattended Console Service features can function separately and independently from the others. The Unattended Console Service features are:

- Unattended Console Service — Alternate Console Position
- Unattended Console Service — Call Answer From Any Voice Terminal
- Unattended Console Service — Preselected Call Routing.

The way in which these features work together to supplement each others coverage is shown in Figure 121-1.

When active, the Alternate Console Position version of this feature directs calls for one attendant console to an alternate console. The alternate console must be identical to and have the same features as the primary console.

This feature is useful at night or during periods when consoles have been removed from service. Also, providing attendant services at another location during certain periods (e.g., a security office) provides convenience and efficiency of operation. The alternate console position provides all the attendant capabilities of the primary attendant console.

Feature History and Development

This feature was first available on System 85 in Release 1. There have been no changes to this feature since Release 1.

USER OPERATIONS

The following is the user operating procedure for this feature.

To Activate an Alternate Console Position:

The attendant at the primary console operates a transfer switch (on/off switch mounted on a wall or desk). Calls for the primary console route to the alternate console.

CONSIDERATIONS

Alternate Console Requirements

An alternate console can be provided for each regular console. Each alternate position requires a transfer switch, relay panel, and attendant console.

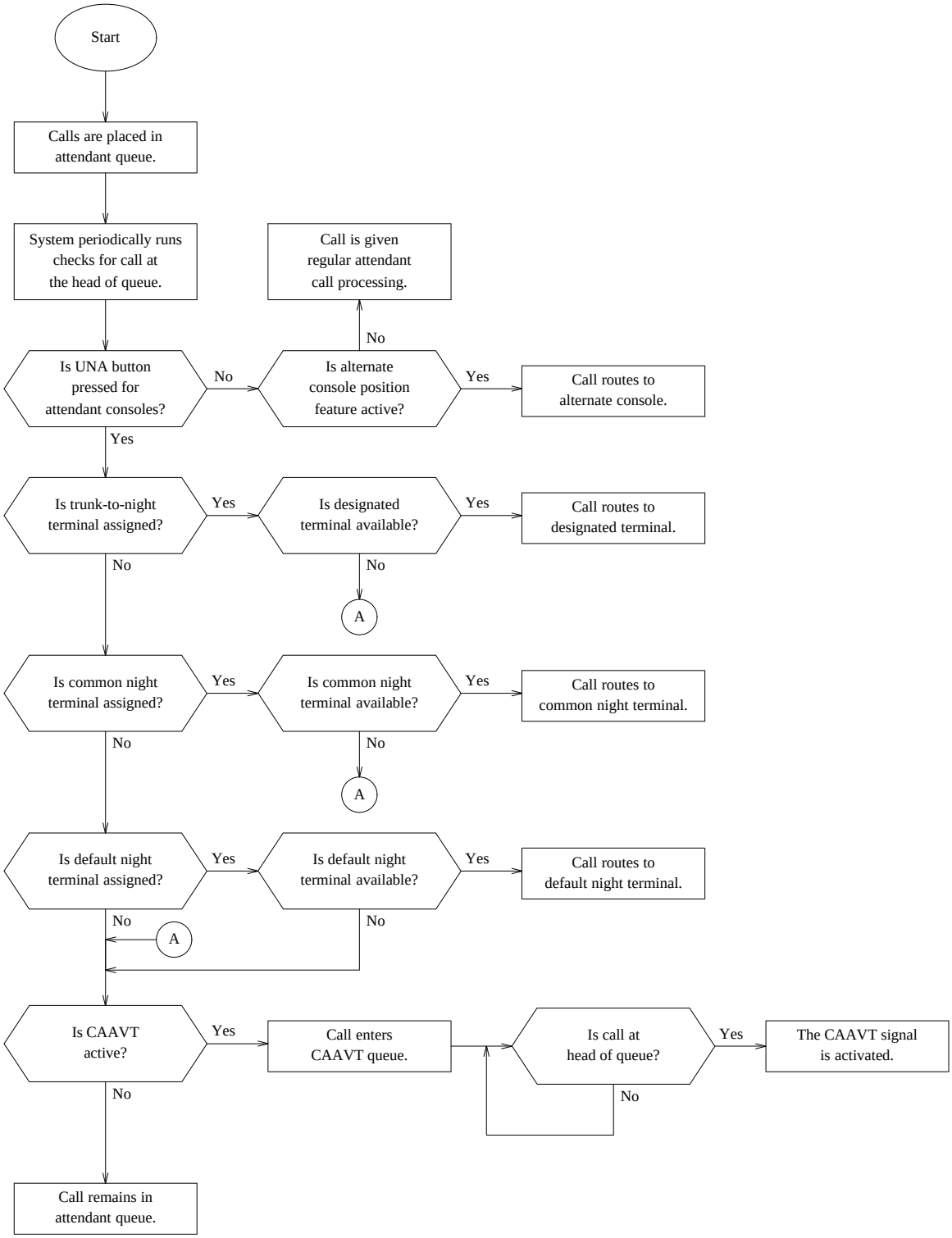

Figure 121-1. Interrelation of Unattended Console Service Features

INTERACTIONS WITH OTHER FEATURES

The following System 85 features affect or are affected by the operation of this feature.

Attendant Control of Trunk Group Access

When the Alternate Console Position feature and the Attendant Control of Trunk Group Access feature are provided and activated concurrently, calls to a controlled trunk are routed to the alternate console position for subsequent processing.

Dial Access to Attendant

The Alternate Console Position feature provides an alternate attendant position which can be used in lieu of a regular (primary) attendant position. Calls normally directed to the primary position route to the alternate position.

Malicious Call Trace

While the Alternate Console Position feature is activated, the alternate attendant position (instead of the regular attendant position) is alerted to trace malicious calls. If the alternate attendant responds to an alert first (by pressing the MCT CONT button), this attendant can also trace the call.

Tenant Services

The Alternate Console Position feature is well behaved in a partitioned switch. Using the Alternate Console Position feature, an alternate console is physically connected to it's primary console, and is activated with a 609A transfer panel. Since the switch performs partitioning checks before calls can be routed to/from the primary console, an alternate console would have the same abilities in a partitioned switch as the specific primary console to which it is connected. The system manager need only ensure that the operators of both consoles are members of the same partition.

RESTRICTING FEATURE USE

Position buttons on the alternate console control the operation of the alternate console. For example:

- Operating the position busy (PBSY) button restricts the alternate console position from receiving traffic. The PBSY button affects only the console on which it is operated.
- Operating the position unattended (UNA) button restricts the alternate console position from receiving traffic. Operation of the UNA button places the switching system in the night mode and diverts all attendant-seeking traffic to a preselected voice terminal.

HARDWARE REQUIREMENTS

The Alternate Console Position feature requires the following additional or special hardware.

- An alternate console, 6017-type key, or equivalent
- A 609A transfer panel.

FEATURE ADMINISTRATION

The Alternate Console Position feature is a hardware implemented feature and requires no administrative procedures.

UNATTENDED CONSOLE SERVICE—CALL ANSWER FROM ANY VOICE TERMINAL

DESCRIPTION

This feature is one of three Unattended Console Service features. These features are designed to work together to provide flexibility and enhanced attendant services under a wide variety of circumstances. While designed to work together, each of these features can function separately and independently from the others. The Unattended Console Service features are:

- Unattended Console Service — Alternate Console Position
- Unattended Console Service — Call Answer From Any Voice Terminal
- Unattended Console Service — Preselected Call Routing.

The way in which these features work together to supplement each others coverage is shown in Figure 122-1.

The CAAVT (Call Answer From Any Voice Terminal) version of the Unattended Console Service feature group allows any unrestricted voice terminal user to answer calls made to the attendant when the attendant is not on duty and a specific voice terminal has not been designated to answer the calls.

The incoming attendant seeking calls activate a distinctive gong, bell, or chime. If necessary, the answering voice terminal user can transfer the call to another voice terminal.

Feature History and Development

This feature was first available on System 85 in Release 1. There have been no changes to this feature since Release 1.

USER OPERATIONS

The following are the user operating procedures for this feature.

To Answer a Call From an Unrestricted Voice Terminal:

- Go off-hook. [Dial tone]
- Dial the CAAVT access code. [Incoming call is connected.]

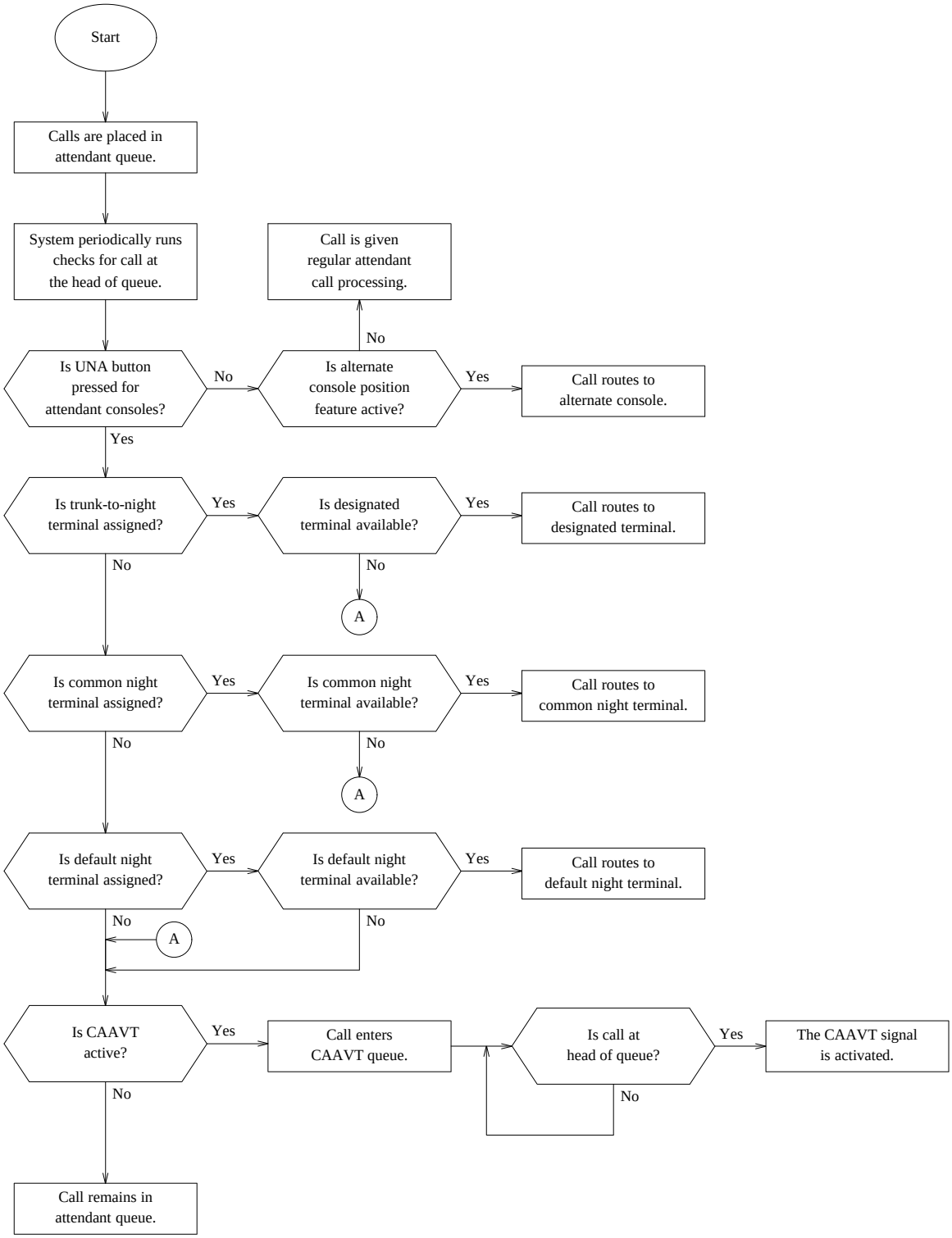

Figure 122-1. Interrelation of Unattended Console Service Features

Considerations

Backup Function

The CAAVT (Call Answer From Any Voice Terminal) feature operates when the Preselected Call Routing feature is active but no specific extensions have been assigned. The CAAVT feature also operates when a common or default voice terminal, assigned for the Preselected Call Routing feature, is busy on another call.

Intercept Treatment

If the voice terminal user receives intercept tone after dialing the CAAVT access code, one or more of the following applies:

- The voice terminal used is Inward, Origination, or Terminal-to-Terminal Only restricted.
- The voice terminal user has a party on hold.
- Another CAAVT user has already answered the call, and the CAAVT queue is empty.

INTERACTIONS WITH OTHER FEATURES

The following System 85 features affect or are affected by the operation of this feature.

Attendant Control of Trunk Group Access

When Call Answer From Any Voice Terminal and Attendant Control of Trunk Group Access are provided and activated concurrently, calls to a controlled trunk are routed to intercept tone.

Centralized Attendant Service

When a Centralized Attendant Service branch switch is in the Call Answer From Any Voice Terminal mode of operation, incoming tie trunk and Remote Access trunk calls, as well as Listed Directory Number calls, reach the Call Answer From Any Voice Terminal queue. These calls do not receive Intercept Treatment.

Conference—Attendant Six Party

When a conference call that was established via the Conference—Attendant Six Party feature (established when the console is in the normal or ‘‘daytime’’ mode) is released by the attendant and then the Call Answer From Any Voice Terminal feature is activated, an attendant is no longer available to service the conference call. If a terminal user, who is also a conferee, presses the RECALL button to recall an attendant, the recall is disallowed. The console must hold the conference prior to activating the CAAVT feature to provide attendant service once the CAAVT feature is activated.

Conference—Three Party

A single-appearance voice terminal user accessing the Call Answer From Any Voice Terminal feature has access to the Conference—Three Party feature even though Conference—Three Party might not be assigned to the user's terminal line class of service. The Call Answer From Any Voice Terminal user may direct a call to another local terminal via Conference—Three Party. When directing a call to a trunk, the Call Answer From Any Voice Terminal user must use a terminal with Conference—Three Party assigned. All multiappearance voice terminals have the Conference—Three Party capability.

Intercept Treatment

If an attendant activates Attendant Diversion to Recorded Announcement and then an attendant activates Unattended Console Service, calls placed to the attendant queue do not enter the CAAVT queue. Instead, these callers will receive the recorded announcement. If this operation is not desired, the attendant should deactivate Attendant Diversion to Recorded Announcement before activating Unattended Console Service.

Last Number Dialed

The LND (Last Number Dialed) feature does not store or redial the CAAVT access code at a voice terminal that responds to the general night-service alert. Instead, the previously stored digits will remain in LND memory.

Malicious Call Trace

While the CAAVT feature is active, the switch does not sound the CAAVT signaling device in response to a malicious call. Instead, the switch will activate a voice recorder and alert the attendant consoles in the normal manner. After an attendant returns to an attendant position, the trace can be performed and the Malicious Call Trace feature can be deactivated.

Restriction—Voice Terminal Restrictions

The switch denies dialing the Call Answer From Any Voice Terminal access code from an Inward restricted terminal, Terminal-to-Terminal Only Calling terminal, or Origination restricted terminal.

Tenant Services

The Call Answer From Any Voice Terminal feature is not fully partitioned. In response to the system-wide ''gong alerting,'' the CAAVT access code can be dialed from an unrestricted voice terminal belonging to any extension partition.

When a CAAVT call is answered using a voice terminal (in a partition other than Extension Partition 0), the answering party is allowed to transfer the call to an extension in the same extension partition or to an extension in Extension Partition 0. If the answering party tries to transfer the call to any other partition, intercept treatment is returned.

When a CAAVT call is answered using a voice terminal in Extension Partition 0, the answering party is allowed to transfer the call to any extension partition in the switch.

Transfer

A single-appearance voice terminal user accessing the Call Answer From Any Voice Terminal feature has access to the Transfer feature even though Transfer might not be assigned to the user's voice terminal class of service. The Call Answer From Any Voice Terminal user may direct a call to another local terminal via Transfer. When directing a call to a trunk, the Call Answer From Any Voice Terminal user must use a terminal with Transfer assigned. All multiappearance voice terminals have the Transfer capability.

Variable Format Call Detail Recording

While CAAVT is active, calls answered by dialing the CAAVT access code are extended using the 3-Party Conference and Transfer features. Therefore, Forced Entry of Account Codes applies to these calls according to the options assigned to the answering ''night'' terminal.

HARDWARE REQUIREMENTS

The Call Answer From Any Voice Terminal feature requires the following additional or special hardware.

- A customer-provided signaling device operated by a 20-hertz signal
- An SN229 interface circuit.

FEATURE ADMINISTRATION

Assignment of the Call Answer From Any Voice Terminal feature is on a system class-of-service basis. The customer can partially administer this feature using the SMT (System Management Terminal). This feature can also be administered using CSM (Centralized System Management).

The following are the applicable MAAP and SMT procedures.

MAAP AND SMT PROCEDURES UNATTENDED CONSOLE SERVICE — CAAVT			
PROCEDURE	**WORD**	**PURPOSE**	**SMT**
275	2	Assigns CAAVT to the system class of service and administers the SN229 equipment location.	Yes
350	1	Assigns the first digit of the feature dial access code (if required).	No
350	2	Assigns the feature dial access code. The applicable encodes are as follows: 16 CAAVT code 47 CAAVT—Activate for CAS Backup.	No

The following are the applicable CSM Command Paths utilizing the **admin** area of TCM or FM.

CSM SCREENS — MASKS UNATTENDED CONSOLE SERVICE — CAAVT		
APPL'N	**OBJECT**	**PURPOSE**
TCM/FM	sys-cos	Assigns CAAVT to the system class of service and administers the SN229 equipment.
TCM/FM	first-digit	Assigns the first digit of the feature dial access code (if required).
TCM/FM	dial-access-code	Assigns the CAAVT feature dial access code.

UNATTENDED CONSOLE SERVICE — PRESELECTED CALL ROUTING

DESCRIPTION

This feature is one of three Unattended Console Service features. These features are designed to work together to provide flexibility and enhance attendant services under a wide variety of circumstances. While designed to work together, each of the Unattended Console Service features can function separately and independently from the others. The Unattended Console Service features are:

- Unattended Console Service — Alternate Console Position
- Unattended Console Service — Call Answer From Any Voice Terminal
- Unattended Console Service — Preselected Call Routing.

The way in which these features work together to supplement each others coverage is shown in Figure 123-1.

The Preselected Call Routing version of the Unattended Console Services feature group redirects attendant seeking calls to designated extension numbers whenever the console is unattended. Distinctive 3-burst ringing is used at the designated voice terminal to alert the user to the nature of the incoming call. The attendant can designate and cancel the assignment of extension numbers.

Calls already in progress when this feature is activated or canceled are not disturbed.

Three types of terminal assignments are available:

- Common Voice Terminal—Directs all attendant seeking calls to a designated extension number.
- Default Voice Terminal—Receives calls when no common voice terminal has been assigned.
- Trunk-to-Terminal—Directs calls on a specified incoming trunk to a designated extension number.

The user benefits derived from this service are:

- Improved customer services by providing holiday, weekend, or night service
- Prevention of lost calls
- Flexibility in meeting customer needs.

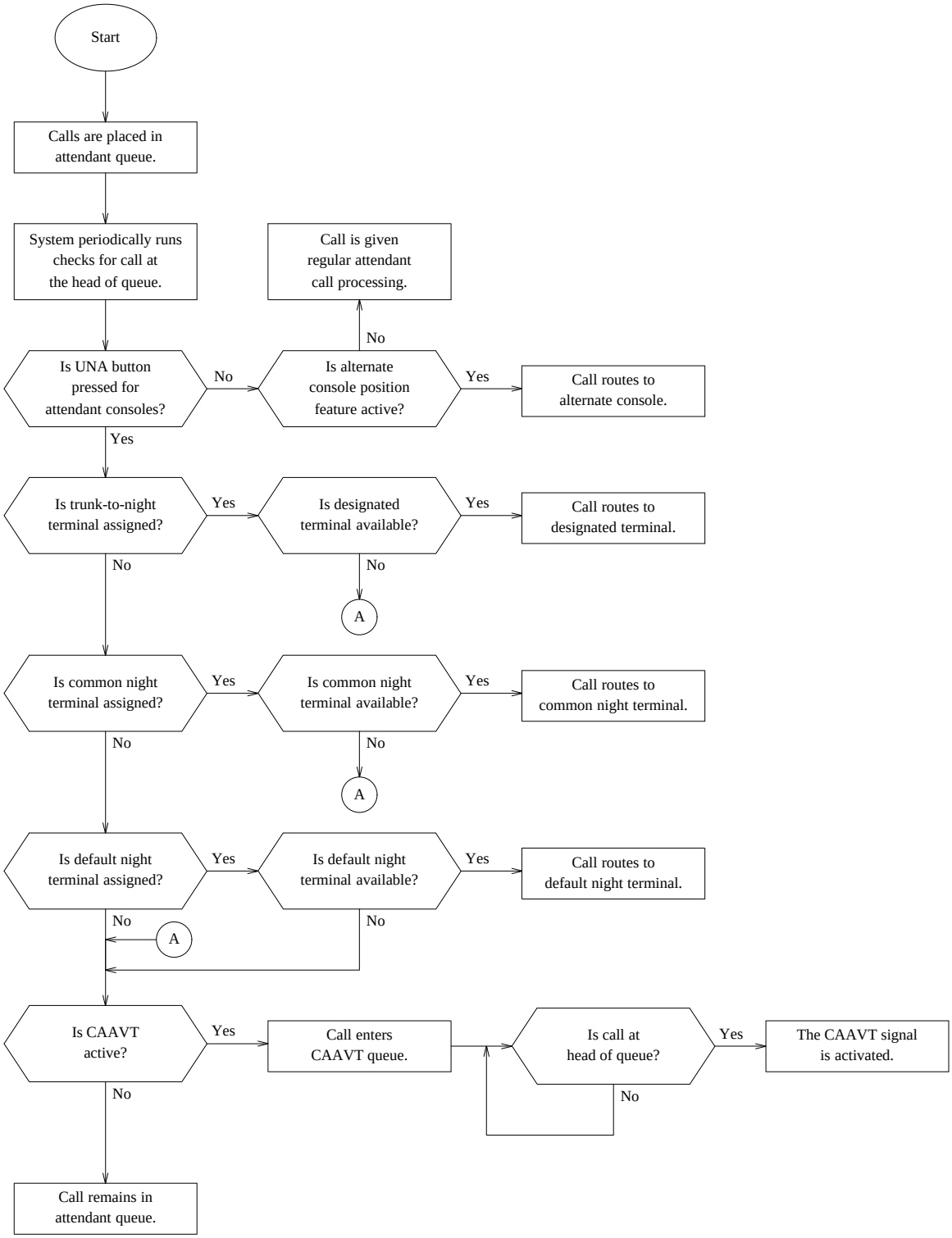

Figure 123-1. Interrelation of Unattended Console Service Features

Feature History and Development

This feature was first available on System 85 in Release 1. Dial access activation and deactivation of Unattended Console Service are provided for R2 V4 switches.

USER OPERATIONS

The following are the user operating procedures for this feature.

To Activate Preselected Call Routing:

- Press the UNA (position unattended) button. [UNA lamp flashes.]

To Activate Preselected Call Routing Using the Access Code (R2 V4):

- Press an idle loop button. [PA lamp goes out.]
- Press the START button. [Dial tone]
- Dial the Activate Unattended Console Service access code. [The switch returns confirmation tone, and UNA lamp (if provided) flashes.]
- Press the RELEASE button. [PA lamp lights.]

To Deactivate Preselected Call Routing Using the Access Code (R2 V4):

- Press an idle loop button. [PA lamp goes out.]
- Press the START button. [Dial tone]
- Dial the Deactivate Unattended Console Service access code. [The switch returns confirmation tone, and UNA lamp (if provided) goes out.]
- Press the RELEASE button. [PA lamp lights.]

To Assign the Common Voice Terminal:

- Press an idle loop button. [PA lamp goes out.]
- Press START. [Dial tone]
- Dial the Assign Common Terminal access code. [Second dial tone]
- Dial the terminal's extension number,

or

- Press the appropriate DXS button. [The switch returns confirmation tone, and the UNA lamp lights steadily.]
- Press RELEASE. [PA lamp lights.]

To Establish a Trunk-to-Voice Terminal Assignment:

- Press an idle loop button. [PA lamp goes out.]
- Press the START button. [Dial tone]
- Dial the Assign Terminal to Trunk access code. [Second dial tone]
- Dial the terminal's extension number,

or

- Press the appropriate DXS button. [Third dial tone]
- Dial the trunk group's access code,

or

- Press the appropriate DTGS button. [Silence]
- Dial the number of the trunk to be assigned to the terminal (e.g., 007). [Confirmation tone]

  NOTE: Using an R2 V1 switch, only two digits should be dialed for trunk numbers (e.g., ''07,'' or ''99''). This is because R2 V1 switches cannot have more than 99 trunks per trunk group.

- Press the RELEASE button. [PA lamp lights.]

To Cancel the Common Voice Terminal and/or the Trunk-to-Terminal Assignments:

- Press an idle loop button. [PA lamp goes out.]
- Press START. [Dial tone]
- Dial the Clear All Terminals access code. [Confirmation tone]
- Press RELEASE.

To Disable the Common Voice Terminal:

- Press an idle loop button. [PA lamp goes out.]
- Press START. [Dial tone]
- Dial the Override Common Terminal access code. [Confirmation tone]
- Press RELEASE. [PA lamp lights.]

CONSIDERATIONS

Extension Assignment

One common extension number and one default extension number can be assigned. The default extension number is assigned with the MAAP, SMT, or the TCM feature.

Hard Processor Swaps and Power Failures

After a power interruption, the current common extension number may be lost.

After a hard processor swap or a power failure, the switch returns to service with Unattended Console Service active. At this time, an attendant can press the UNA button to restore normal service.

A soft processor swap does not invoke the Unattended Console Service feature.

INTERACTIONS WITH OTHER FEATURES

The following System 85 features affect or are affected by the operation of this feature.

Attendant Control of Trunk Group Access

When Preselected Call Routing is provided and activated concurrent with Attendant Control of Trunk Group Access, calls directed to a controlled trunk group are routed to intercept tone.

Attendant Interposition Calling and Transfer

If an attendant interposition calls another attendant with Preselected Call Routing active, the call is placed in the called attendant's priority queue. When Preselected Call Routing is deactivated, the call is removed from the priority queue and alerting is provided. The call does not route to the preselected voice terminal.

Automatic Circuit Assurance

When the switch is in the preselected call routing mode, partial Automatic Circuit Assurance operation allows trunk referrals to be recorded on the audit trail without originating referral calls to the attendant.

Call Coverage

Calls routing to a preselected voice terminal when the attendant console is in the night mode do not redirect to coverage when that terminal has coverage assigned. Only direct calls to the preselected voice terminal assigned coverage redirect.

Call Park

When Preselected Call Routing is active, if a trunk party is placed in Call Park and the 2-minute timer for ringback tone times out, the trunk call is routed to the assigned preselected voice terminal.

Call Vectoring

Vector processing is not available for incoming calls to the default voice terminal for Unattended Console Service. Entering a VDN in Procedure 275, Word 2 as the default extension number is not allowed. When this is attempted, an administration error will occur.

Entering a VDN as the ‘‘Trunk-to-Night Terminal’’ extension number for a trunk group in Procedure 116, Word 1 or Procedure 150 is not allowed. When this is attempted, an administration error will occur.

An attendant is not allowed to establish a ‘‘Trunk-to-Night Terminal’’ assignment by dialing a VDN as the night-terminal extension. When this is attempted, the switch returns intercept tone.

Call Waiting

Call Waiting is not available when a call is already waiting on the busy preselected voice terminal, or when the terminal user has placed another call on hold. The next call to that terminal forwards to the Call Answer From Any Voice Terminal feature, if provided. The incoming queue holds all other calls.

With Call Waiting, the following could happen when going on-hook with a call waiting and one or more calls to the busy preselected voice terminal are in queue: the user may be connected to the next call in the queue instead of the waiting call. This occurs because the queue scan is performed every 100 milliseconds, whereas the Call Waiting scan is performed every 2 seconds. To ensure a connection with call waiting, the terminal user presses the RECALL button and dials the answer-hold access code. The terminal user then connects to the waiting party.

CDRR (Call Detail Recording and Reporting)

When the switch is in the night mode, CDRR records calls routed to the night voice terminal.

Conference—Attendant Six Party

When a conference call that was established via the Conference—Attendant Six Party feature (established when the console is in the normal or ‘‘daytime’’ mode) is released by the attendant and then the Preselected Call Routing feature is activated, an attendant is no longer available to service the conference call. If a terminal user, who is also a conferee, presses the RECALL button to recall an attendant, the recall is disallowed. The console must hold the conference prior to activating the Preselected Call Routing feature to provide attendant service once the Preselected Call Routing feature is activated.

Conference—Three Party

When the switch is in the Preselected Call Routing mode of operation, the Conference—Three Party feature is always enabled for the preselected terminal, regardless of the preselected voice terminal’s class of service. However, the single-appearance preselected voice terminal must have Conference—Three Party assigned to its class of service to enable the user to direct incoming calls to outgoing trunks. All multiappearance voice terminals have the Conference—Three Party capability.

Extension Number Portability

The preselected voice terminal extension must reside at the local switch. It cannot be ported to another node and still serve as a preselected voice terminal at the ported-from node.

Intercept Treatment

If an attendant activates Attendant Diversion to Recorded Announcement and then an attendant activates Unattended Console Service, calls placed to the attendant queue do not complete to the preselected voice terminal. Instead, these callers will receive the recorded announcement. If this operation is not desired, the attendant should deactivate Attendant Diversion to Recorded Announcement before activating Unattended Console Service.

Main/Satellite

When a Direct Inward Dialed call to the main receives intercept-to-attendant treatment and the preselected Call Routing feature is active, the call routes to the preselected voice terminal at the main switch. When a Direct Inward Dialing call to a satellite receives intercept treatment and there is neither a recorded announcement nor an attendant console, the call routes to the satellite preselected voice terminal.

Malicious Call Trace

While the Preselected Call Routing feature is active, preselected voice terminals are not alerted to trace malicious calls. Instead, the switch will activate a voice recorder and alert the attendant consoles in the normal manner. After an attendant returns to an attendant position, the trace can be performed and the Malicious Call Trace feature can be deactivated.

Power Failure Transfer

When full (flexible) night station service is activated and a power failure occurs, the terminal line(s) assigned by the attendant is lost from memory. When commercial power is restored and reinitialization occurs, night station service calls are routed to the default terminal.

Restriction—Voice Terminal Restrictions

The Preselected Call Routing feature takes precedence over the Voice Terminal Restrictions (Inward, Termination, Terminal-to-Terminal Only Calling, and Manual Terminating Line) feature. Therefore, incoming trunk calls can terminate on the preselected voice terminal, and the preselected terminal can initiate outgoing trunk calls with these restrictions active. This is the only facet of the restrictions that is overridden. For example, all calls, except incoming trunk calls, are denied unless the calls are attendant completed for manual terminating line restricted voice terminals.

SMDR (Station Message Detail Recording)

When the switch is in the night mode, SMDR records calls routed to the night voice terminal.

Tenant Services

Default Night Terminal

For an *unpartitioned System 85*, the default night terminal is assigned on a system-wide basis in Procedure 275, Word 2.

For a *partitioned System 85*, the system-wide administration is blocked. Instead, a default night terminal can be assigned to each attendant partition in Procedure 270, Word 3.

Trunk-to-Terminal Assignments

Using an *unpartitioned System 85* with full night service, an attendant can dial the Assign Terminal to Trunk access code to set trunk-to-terminal assignments for Preselected Call Routing.

Using a *partitioned System 85*, this function of full night service is disabled. Instead, these associations can only be assigned in Procedure 150. However, there are no software checks in Procedure 150 to ensure the proper partitioning of these associations. It is the responsibility of the system manager to design allowable and practical trunk-to-terminal assignments.

Common Night Terminal

Using an *unpartitioned System 85*, an attendant can dial the Assign Common Terminal access code to designate the common night terminal for the entire switch.

Using a *partitioned System 85*, this functionality is modified. To assign a common night terminal for a partition, the partition's controlling attendant dials the Assign Common Terminal access code, the extension number of the partition's common night terminal, and then the number of the attendant partition.

Clear All Terminals

Using an *unpartitioned System 85*, an attendant can dial the Clear All Terminals access code to cancel the common night terminal assignment and/or the current trunk-to-terminal assignments for Preselected Call Routing. When this is done, Preselected Call Routing sends incoming calls to the default night terminal (if assigned), and then to the CAAVT queue (if assigned).

Using a *partitioned System 85*, this functionality is modified. A partition's controlling attendant can dial the Clear All Terminals access code, followed by the number of the attendant partition. When this is done, *only* the common night terminal assignment for that partition is canceled. (The trunk-to-terminal associations, assigned in Procedure 150, are not affected.) So, Preselected Call Routing would send incoming calls to the trunk-to-terminal association (if assigned), then to the partition's default night terminal (if assigned), and then to the CAAVT queue (if assigned).

Override Common Night Terminal

Using an *unpartitioned System 85*, an attendant can dial the Override Common Night Terminal access code to bypass the common night terminal and the default night terminal, and divert calls directly to the CAAVT queue.

Using a *partitioned System 85*, the Override Common Night Terminal function is disabled. This function is no longer necessary because CAAVT ‘‘gong alerting’’ is not partitioned.

Timed Recall on Outgoing Calls

While the Preselected Call Routing feature is active, the Timed Recall on Outgoing Calls feature is deactivated.

Transfer

When the switch is in the Preselected Call Routing mode of operation, the Transfer feature is always enabled for the preselected terminal, regardless of the preselected voice terminal’s class of service. However, the single-appearance preselected voice terminal must have the Transfer assigned to its class of service to enable the user to direct incoming calls to outgoing trunks. All multiappearance voice terminals have the Transfer capability.

Variable Format Call Detail Recording

While Preselected Call Routing is active, calls routed to a preselected voice terminal are extended using the 3-Party Conference and Transfer features. Therefore, Forced Entry of Account Codes applies to these calls according to the options assigned to the preselected voice terminal.

HARDWARE REQUIREMENTS

None.

FEATURE ADMINISTRATION

Assignment of the Preselected Call Routing feature is on a per-system basis. The customer can partially administer this feature using the SMT (System Management Terminal) or the TCM (Terminal Change Management) feature. This feature can also be administered using CSM (Centralized System Management).

The following are the applicable MAAP and SMT procedures.

MAAP AND SMT PROCEDURES UNATTENDED CONSOLE SERVICE — PRESELECTED CALL ROUTING			
PROCEDURE	**WORD**	**PURPOSE**	**SMT**
100	1	Assigns an attendant dial access code to a trunk group for Unattended Console Service. The dial access restriction may also be activated.	No
150	—	Assigns the default night terminal to a trunk group.	No
203	1	Assigns the UNA button to the attendant console(s).	No
275	2	Assigns Preselected Call Routing to the system class of service. Also, use this procedure to assign the default terminal extension and to display the current common terminal extension.	Yes
350	1	Assigns the first digit of the feature dial access codes (if required).	No
350	2	Assigns the feature dial access codes. The applicable encodes are as follows: 22 Clear all terminals 23 Assign common terminal 24 Override common terminal 25 Assign terminal to trunk 97 Activate Unattended Console Service 98 Deactivate Unattended Console Service.	No

The following is the applicable TCM path name used with the AP 16.

TCM SCREEN UNATTENDED CONSOLE SERVICE — PRESELECTED CALL ROUTING	
PATH NAME	**PURPOSE**
terminal-change system parameters (select the Night-Service option)	Assigns Preselected Call Routing to the system class of service and assigns the default terminal extension number.

The following are the applicable CSM Command Paths utilizing the **admin** area of TCM or FM.

CSM SCREENS — MASKS UNATTENDED CONSOLE SERVICE — PRESELECTED CALL ROUTING		
APPL'N	**OBJECT**	**PURPOSE**
FM	trk-grp	Assigns an attendant dial access code to a trunk group for Unattended Console Service, activates the dial access restriction (if required), and assigns the default night terminal to a trunk group.
TCM	control-keys	Assigns the UNA button to the attendant console(s).
TCM/FM	first-digit	Assigns the first digit of the feature dial access code (if required).
TCM/FM	dial-access-code	Assigns the feature dial access codes.

UNIFIED MESSAGING

DESCRIPTION

Unified Messaging is an integrated, cost-effective family of distinct messaging services working together to meet a customer's total organizational messaging requirements.

Unified Messaging allows prompt internal and external communications for voice and data. This feature is designed to break the barriers to efficient phone communications including busy signals, unanswered calls, repeated call backs, waiting on hold, and missed communications. These barriers are broken by having efficient alerting and notification of new messages that can be universally accessed from the messaging services.

Messaging Principles

The integration is achieved through five messaging principles. The five principles are:

- **Universal Mailbox**

  Provides single access for all messages in the system.

- **Integrated Preparation**

  Provides the ability to create messages on one service for distribution to disparate mailboxes in other services. A distribution group for mail can consist of subscribers to any of the messaging services.

- **Integrated Notification**

  Allows the AMWL (Automatic Message Waiting Lamp) and/or mail counter to notify all messaging services of incoming messages. Their source and nature are identified.

- **Universal Retrieval**

  Allows retrieval of messages from mailboxes using a printer, voice terminal, or data terminal.

- **Universal Connectivity**

  Permits intra- and inter-premises communication over both public and private networks. This is made possible by and adoption of the CCITT (International Telegraph and Telephone Consultative Committee) standards for message handling services.

Available Messaging Services

Messaging services available with System 85 are:

- AUDIX (Audio Information Exchange)
- Call Coverage
- Electronic Mail

  Electronic Mail consists of EDC (Electronic Document Communications) Mail and UNIX* System Mail
- Leave Word Calling
- Message Center Service.

AUDIX (Audio Information Exchange)

The AUDIX message-handling system uses stored voice prompts and announcements to guide subscribers through their messaging operations. AUDIX provides subscribers with the ability to send and receive voice messages to or from other AUDIX subscribers. AUDIX subscribers can also receive messages from nonsubscribers. See **AUDIX**.

Call Coverage

Call Coverage provides alternate answering points for calls that would otherwise go unanswered. For a principal (user with Call Coverage active), Call Coverage provides automatic redirection of calls that meet specified conditions to a coverage path. The principal, coverage path, and coverage criteria (conditions) combine to make a coverage group. See **Call Coverage**.

Electronic Mail

Electronic Mail is either of two applications that allow users to electronically transmit messages and documents to other users in the network. The two electronic-mail applications provided with System 85 are:

- **EDC (Electronic Document Communications)**:

  EDC gives the user the ability to store, edit, retrieve, and send materials to other users of integrated voice/data stations on a scheduled basis (at specified dates and times). Recipients can include non-EDC users. EDC also lets users update their status for retrieval at the Message Center (see EDC Command Line Users Guide, 999-700-559).
- **UNIX System Mail**:

  UNIX System Mail uses the UUCP (UNIX System-to-UNIX System Copy) as a communications link

* Registered trademark of AT&T.

between systems. With the UNIX System V operating system resident on the 3B5 AP, mail can be exchanged with users on other UNIX systems.

LWC (Leave Word Calling)

The LWC feature allows internal callers (internal to the local switch or to the Distributed Communications System environment) to leave messages for internal principals (the called parties) without the assistance of a secretary or Message Center agent. The LWC feature stores a standard message on the AP (Applications Processor), AUDIX adjunct, or the switch. Leave Word Calling on the switch provides economical message handling on System 85s with a low volume message service requirement, where an AP or an AUDIX adjunct is not necessary. The storage facility used for LWC messages is an administrable option. See **Leave Word Calling**.

MCS (Message Center Service)

The MCS feature provides routing of calls to centralized agents who give a personalized greeting and take and relay messages. A Message Center provides a central exchange point for messages and ensures proper coverage of calls made to voice terminals. The Message Center, is an ACD (Automatic Call Distribution) or EUCD (Enhances Uniform Call Distribution) split, and must be the last point in a Call Coverage path (see 999-700-559).

Feature History and Development

This feature was first available on System 85 in Release 2, Version 3.

USER OPERATIONS

Each different messaging feature and service has its own user operating procedures. There are no separate operations for Unified Messaging. See the user manuals for EDC and MCS user operations and the feature sections in this manual for AUDIX, Call Coverage, and LWC user operations.

CONSIDERATIONS

Loss of DCIU Link

The DCIU (Data Communications Interface Unit) is critical to messaging services that use an AP or adjunct. When the DCIU connection is down, messaging operation cannot be performed with these services. For LWC (on the AP) the user receives a ‘‘messages unavailable’’ message. No attempt is made to display AUDIX status.

INTERACTIONS WITH OTHER FEATURES

The following System 85 features affect or are affected by the operation of this feature.

Unified Messaging as Viewed by an EDC User

Table 124-A shows the interactions while sending or receiving messages using EDC.

Table 124-1. EDC Interactions With Unified Messaging Services

EDC USERS		
Service	**EDC Users Can Receive Mail From:**	**EDC Users Can Send Mail To:**
EDC	Complete EDC functionality.	Complete EDC functionality.
LWC*	Recipient must be an EDC and MCS subscriber. A LWC message can be demand- or auto-forwarded to the EDC mailbox from MCS.	Users cannot send a text message from EDC into integrated LWC on the switch.
AUDIX	Recipient must be an EDC and AUDIX subscriber. An AUDIX message remains in AUDIX and the EDC user receives the notification ‘‘AUDIX=y’’ on the status line of the terminal, ‘‘You have voice mail’’ on the message line, and an audible alert at the terminal.	Recipient must be an EDC and AUDIX subscriber. An EDC message remains in EDC and the AUDIX user receives the verbal notification, ‘‘You have Electronic Text messages.’’
MCS	Recipient must be an EDC and MCS subscriber. An MCS message can be demand- or auto-forwarded to the EDC mailbox.	Recipient must be an MCS subscriber. Nonprivate messages less than or equal to 296 characters go to the subscribers MCS mailbox. If the message is more than 296 characters, it goes to the recipient’s assigned printer. An MCS Agent can receive itinerary updates from EDC subscribers. Also, there is notification of text messages.
UNIX System	Recipient must be an EDC subscriber. Incoming mail is placed in the EDC mailbox and treated as EDC mail.	Location indicated on EDC mail must be a known UNIX System machine name.
* Leave Word Calling on an AP stores messages on the AP in the MCS mailbox. Integrated Leave Word Calling stores messages in the switch’s data base.		

When a new message arrives while the user is using EDC at a data terminal, the user can be alerted to the new message in seven ways. The seven ways are:

- If applicable, the MWL lights.

- The single new mail counter on the status line increments for EDC or UNIX System mail.
- For MCS messages, the MCS: y/n indicator changes from ‘‘n’’ to ‘‘y.’’
- For AUDIX messages, the AUDIX: y/n indicator changes from ‘‘n’’ to ‘‘y.’’
- For MCS messages, the message line displays, ‘‘You have MCS messages.’’
- For AUDIX messages, the message line displays, ‘‘You have AUDIX messages.’’
- There is an audible indication from the terminal.

When the new message arrives while the user is accessing EDC at a data terminal, the user can retrieve the message by:

- Using an EIA terminal to display the message
- Using a BCT terminal to display the message
- Letting another user display the message via either an EIA or BCT terminal.

Unified Messaging as Viewed By an MCS User

Table 124-B shows the interactions while sending or receiving messages using MCS.

Table 124-2. MCS Interactions With Other Unified Messaging Services

MCS USERS		
Service	**MCS Users Can Receive Mail From:**	**MCS Users Can Send Mail To:**
EDC	Recipient must be an MCS and EDC subscriber. Messages less than or equal to 296 characters go to subscriber's message box. If more than 296 characters, they go to sender's assigned printer. An MCS Agent can receive itinerary updates from EDC subscribers.	Recipient must be an MCS and EDC subscriber. Messages left in the MCS mailbox can be auto- or demand-forwarded to the EDC mailbox.
LWC	Automatically places mail in the MCS mailbox. Messages may be forwarded to the EDC mailbox.	Recipient must have Integrated Leave Word Calling on the switch.
AUDIX	Recipient must be an MCS and AUDIX subscriber. The AUDIX message remains in the AUDIX mailbox, and the MCS user receives the notification, ''You have voice mail waiting.''	Recipient must be an MCS and AUDIX subscriber. The MCS message remains in the MCS mailbox and the AUDIX user receives the verbal notification, ''You have new Electronic Text messages.''
MCS*	Complete MCS functionality.	Complete MCS functionality.
UNIX System	Same as EDC Interactions.	Same as EDC Interactions.
* Private documents and messages will not be sent to the MCS printer. Users must call the MCS Agent.		

The MCS user can be alerted of new messages by the MWL.

The MCS user has several methods of retrieving messages. At the end of each method of retrieval is the notification of whether there is mail from either AUDIX or EDC. The methods of retrieving messages are:

- Printing the message
  - — Scheduled: the printing of the messages at a specified time of the day. If Auto Print is used, no notification of AUDIX or EDC messages is provided.
  - — Demand: the printing of the messages by dialing into the MCS.
- Calling the MCS Agent for verbal delivery of messages
- Via an alternate messaging service (e.g., EDC, UUCP). The user can activate forwarding to these services, and MCS messages can be waiting in the alternate service.
- Using the digital display available on any S-channel device (e.g., 515 BCT, 7405D)
  - — Only messages less than 40 characters can be retrieved, otherwise the user has to call their MCS Agent.
- Using an EIA terminal to retrieve the message
- Using auto or demand forward of the message from MCS to EDC's mailbox.

Unified Messaging as Viewed From an AUDIX User

Table 124-C shows the interactions while sending or receiving messages using AUDIX from any touch-tone voice terminal anywhere in the world.

Users are alerted to new messages through the MWL.

Table 124-3. AUDIX Interactions With Other Unified Messaging Services

AUDIX USERS		
Service	**AUDIX Users Can Receive Mail From:**	**AUDIX Users Can Send Mail To:**
EDC	Recipient must be an AUDIX and EDC subscriber. An EDC message remains in the EDC mailbox, and the AUDIX user receives the verbal notification, ''You have new Electronic Text messages.''	Recipient must be an AUDIX and EDC subscriber. An AUDIX message remains in the AUDIX mailbox, and the EDC user receives the notification ''AUDIX=y'' on the status line of the terminal, ''You have voice mail'' on the message line of the terminal, and an audible alert at the terminal.
LWC*	Automatically places message in the AUDIX mailbox. Message is delivered in its entirety.	Recipient must have Integrated Leave Word Calling on the switch.
AUDIX	Complete AUDIX functionality.	Complete AUDIX functionality.
MCS	Recipient must be an AUDIX and MCS subscriber. MCS messages remain in MCS mailbox and AUDIX users receive a verbal message, ''You have new MCS messages.''	Recipient must be an AUDIX and MCS subscriber. AUDIX messages remain in the AUDIX mailbox and MCS users receive notice, ''You have voice mail.''
UNIX System	Same as EDC Interactions.	Same as EDC Interactions.
* Leave Word Calling on an AP stores messages on the AP in the MCS mailbox. Integrated Leave Word Calling stores messages in the switch's data base.		

HARDWARE REQUIREMENTS

As with User Operations, each of the messaging features are services have their own hardware requirements. Unified Messaging has no special hardware requirements apart from those of the messaging features and services used.

FEATURE ADMINISTRATION

No separate administration is needed for Unified Messaging. Unified Messaging relies upon the administration of AUDIX, Call Coverage, and Leave Word Calling at the switch and EDC Mail and MCS at the AP.

UNIFORM CALL DISTRIBUTION

DESCRIPTION

The use of UCD groups provides an economical alternative to Direct Inward Dialing for departments that receive a high volume of incoming calls. Selected terminal users can be organized into a group, and the group is accessed by an LDN (Listed Directory Number).

This feature reduces call-completion time and attendant assistance for many incoming calls. There is one listed directory number for the group. Calls to a UCD group can be via Direct Inward Dialing, non-Direct Inward Dialing, private switched network, dial repeating or automatic tie trunks, and from terminals or attendants. All calls to the group extension, other than attendant originated, are initially directed to the UCD queue associated with the group.

Feature History and Development

This feature was first available on System 85 in Release 1.

The UCD feature is not available on switches after Release 2, Version 1. This feature was replaced by the EUCD (Enhanced Uniform Call Distribution) feature and the ACD (Automatic Call Distribution) feature.

> **NOTE:** Refer to Appendix B for a tabular comparison of the various call distributors provided in System 85, Release 2.

LDN (Listed Directory Number)

A listed directory number links to a UCD group by associating the LDN with the extension number of the first or controlling terminal in the group. The controlling or primary terminal for the group is the first terminal, and the first terminal provides control functions such as call forwarding for the group. The switch directs incoming calls for the listed directory number to a group queue.

Hunting

A circular hunt routine extends the call to a group member. The hunt sequence starts with the extension number after the last extension to receive a group call. The hunt then proceeds to test all extension numbers in the hunt sequence. If all terminals are busy, the call remains in queue, and the hunt routine runs again in 2 seconds.

UCD Terminals

Each terminal (including the controlling terminal) in a UCD group can receive calls either as a group member or as an individual terminal. For calls originating within the switch, a unique group extension number (the *associated* extension number) identifies the group. For incoming calls (call originating outside the switch), the type of incoming trunk identifies the UCD group to which a call will be routed:

- For automatic-in type trunks, the call routes to the UCD group on which that trunk group terminates.
- For dial repeating type trunks, the call routes to the group dialed.

This is similar to the way DID calls complete to individual terminals (including individual members of a UCD group).

Busy-Out Function

Individual members can control the availability of their terminals for group calls. To busy-out a single terminal, the group member goes off-hook, dials the UCD Terminal Busy access code, and goes on-hook.

The controlling terminal can make the entire group unavailable for group calls. To busy-out the group, the controlling terminal user goes off-hook, dials the UCD Group Busy access code, and goes on-hook.

Recorded Announcement

When there is a delay in completing a call, an optional recorded announcement informs the calling party of the delay.

This delay announcement can be repeated (Procedure 275, Word 4). When repeated, the calling party hears silence between cycles on the announcement machine.

FADS (Force Administration Data System)

The FADS (Force Administration Data System) feature provides incoming call traffic information.

USER OPERATIONS

The following are the user operating procedures for this feature.

To Busy-Out an Individual Group Member:

- Go off-hook. [Dial tone]
- Dial the UCD Terminal Busy access code. [Confirmation tone]
- Go on-hook.

To Busy-Out an Entire Group From the Controlling Terminal:

- Go off-hook. [Dial tone]
- Dial the UCD Group Busy access code. [Confirmation tone]
- Go on-hook.

CONSIDERATIONS

DDC (Direct Department Calling)

If the switch uses UCD and DDC (Direct Department Calling), the memory size of the switch and the call traffic requirements determine the number of combined groups and voice terminals per group. The switch provides up to 28 groups with a maximum of 40 voice terminals per group. An extension number cannot belong to both a UCD and a DDC group; the groups are mutually exclusive.

FADS (Force Administration Data System)

The FADS feature only measures the first 12 groups. For maximum traffic measurement efficiency, it is recommended that the first 12 UCD/DDC groups be assigned as UCD groups. Groups 1 through 4 should contain 40 members, and groups 5 through 12 should contain 24 members.

Hunting

Group members should have the stop hunt option active. This prevents calls forwarded to an individual's extension number from hunting.

Status Indicators

Status indicator lamps are available as queue warning level, trunk status, or system reload indicators. These units can be desk or wall mounted.

As many as 128 trunk status lamps can be provided with the switch to display the status of trunks terminating to DDC groups or UCD groups. The status lamp indicates three separate trunk states: busy (lamp on), idle (lamp off), and alerting (fluttering lamp).

A queue warning level lamp lights when the number of calls waiting in queue exceeds a preset warning level between 1 and 31.

Power Failure Interrupts

After a power interruption, an automatic reloading occurs of switch translations from the tape into memory. The system reload indicator lights. All group members are unavailable for group calls after a tape reload. Each group member must dial the UCD terminal idle access code in order to receive group calls.

Recorded Announcement

If the recorded announcement is provided and there is more than one UCD or DDC group assigned in the switch, all groups have the same recorded announcement.

When the 13A announcement set is used, the Recorded Announcement option for Intercept Treatment feature and the delay recorded announcement for UCD can use separate channels on the same announcement machine.

Message Center

The Message Center feature uses UCD groups. Hence, the use of UCD groups by Message Center decreases the number of UCD groups available for other UCD functions.

DCS (Distributed Communications System)

In a Distributed Communications System environment, calls to a UCD group cannot forward between nodes.

INTERACTIONS WITH OTHER FEATURES

Attendant Call Waiting

An attendant call to a UCD group does not queue. The switch attempts to complete the call ahead of any calls that may be in queue. If no idle line is found in the group, the call waits on the controlling terminal if Attendant Call Waiting is provided. However, when an attendant places a call to a UCD individual terminal and that terminal is busy, the call waits on the busy individual terminal if Attendant Call Waiting is provided.

Automatic Callback

Any UCD group member can use the Automatic Callback feature.

When Automatic Callback is activated toward a UCD group number, callback occurs only when the UCD controlling terminal and the calling terminal becomes idle.

Busy Verification of Lines

An attendant can use the Busy Verification of Lines feature to check the busy/idle condition of a terminal in a UCD group. However, this feature cannot check for a line ‘‘made busy’’ to group calls. If activating Busy Verification of Lines toward a UCD group number, only the controlling terminal line is verified (no hunting takes place).

Call Coverage

Coverage cannot be assigned to an associated extension number of a UCD group. However, the switch allows the assignment of coverage to individual extensions of group members for calls addressed directly to that extension.

The switch cannot redirect a call to coverage after the UCD feature has distributed the call to a group member. Therefore, the UCD group must be assigned as the final point in the coverage path. When assigning a UCD group as the final point in a coverage path, the group number is the assigned coverage point.

Call Forwarding—Follow Me

Call Forwarding—Follow Me, when activated for a UCD group, routes all UCD calls to a designated terminal, the attendant queue, the centralized attendant queue, or to another UCD or DDC group queue immediately after dialing. If a call is already in queue when this feature is activated, the call remains in queue for 7 seconds before forwarding.

a. Only the controlling terminal or attendant can activate or deactivate Call Forwarding—Follow Me for the UCD group. Noncontrolling group terminals cannot activate or cancel Call Forwarding—Follow Me even if authorized by their line class of service.

b. Only calls to the UCD group number forward when activating Call Forwarding—Follow Me. Calls to an individual terminal or controlling terminal number do not forward.

c. The stop hunt option should be provided in the line class of service for each UCD group extension. Otherwise, a call forwarded to an individual UCD member's extension is treated as a call to the UCD group (hunting is used).

Call Waiting

When Call Waiting is assigned to an individual UCD group terminal, calls to the terminal are allowed to wait if the called terminal line is busy. The group terminal user can be connected to the waiting call by going on-hook, whereby the terminal is alerted and connected to the call upon answer. These calls have preference over UCD calls in queue waiting to be answered. Do not assign this feature to the controlling extension number of a UCD group.

Hold

Going on-hook to return to a held call may result in the voice terminal being connected to the next call in the distribution-group queue. Using the Call Hold access code is the recommended method for returning to a held call.

Main/Satellite/Tributary

Extension numbers that use extension number steering cannot be the controlling extension for a UCD group.

Priority Calling

When activating Priority Calling toward a UCD group terminal, the call waits on that terminal. When activating Priority Calling toward a UCD associated extension number, the call waits on the controlling terminal (the call does not enter the group queue).

Restriction—Attendant Control of Voice Terminals

If any Attendant Control of Voice Terminals restriction (Outward, Terminal-to-Terminal Only Calling, Termination, or Total) is assigned to a UCD controlling terminal or a UCD group extension, then the restriction assigned is applied to the entire UCD group.

SMDR (Station Message Detail Recording)

On an incoming UCD call, the trunk identification number is recorded as the calling number.

RESTRICTING FEATURE USE

Performing the busy-out procedure removes a group member from the UCD group.

The controlling terminal can make the entire UCD group unavailable for UCD calls by dialing an access code.

An attendant can restrict access to a UCD group by activating the Attendant Control of Voice Terminals feature for the group number.

HARDWARE REQUIREMENTS

The UCD feature requires the following additional or special hardware.

- 30A8 system status indicator lamp panel to display the queue warning status for eight UCD groups
- SN241 contact interface (eight circuits per circuit pack)
- SN231 auxiliary trunk for delay recorded announcement (four circuits per circuit pack)
- 13A announcement set to provide the recorded announcement (only one channel can be used for UCD/DDC) or KS-65270 digital announcer (single-channel announcement set).

FEATURE ADMINISTRATION

Assignment of the UCD feature is on a per-trunk group basis and on a line class-of-service basis. The customer can partially administer this feature using the SMT (System Management Terminal) or the TCM (Terminal Change Management) feature. This feature can also be administered using CSM (Centralized System Management).

The following are the applicable MAAP and SMT procedures.

MAAP AND SMT PROCEDURES — UNIFORM CALL DISTRIBUTION			
PROCEDURE	**WORD**	**PURPOSE**	**SMT**
000	1	Administers the equipment location and class of service of each member's extension.	Yes
000	2	Administers hunt-to assignments to each member's extension.	Yes
001	—	Assigns associated extension numbers to the primary extension.	Yes
010	1	Assigns UCD/DDC membership to a voice terminal class of service. Also, use this procedure to assign the stop hunt option to a UCD/DDC member's class of service.	Yes
025	1	Administers the characteristics of the UCD/DDC group.	Yes
025	4	Administers UCD/DDC trunk indicator lamps.	Yes
100	1	Administers the trunk type and trunk-group assignments for UCD delay recorded announcement trunk, contact interface trunk, and queuing trunk group.	No
115	—	Assigns the UCD/DDC group terminations to incoming trunk groups.	No
150	—	Assigns the delay recorded announcement trunk to an SN231 equipment location.	No
155	—	Assigns the contact interface trunk group to an SN241 equipment location.	No
204	1	Designates the desired alphanumeric display for UCD/DDC calls that reach an attendant.	No
275	4	Assigns the UCD/DDC delay recorded announcement to the system class of service.	Yes
350	1	Assigns the first digit of the feature dial access codes and extension number groups (if required).	No
350	2	Assigns the feature dial access codes. The applicable encodes are as follows: 51 UCD/DDC terminal busy 52 UCD/DDC terminal idle 54 UCD/DDC lamp test 58 UCD/DDC group busy 59 UCD/DDC group unbusy 70 UCD/DDC status toggle.	No
354	1	Administers groups of extension numbers.	No

The following are the applicable TCM path names used with the AP 16.

TCM SCREENS — UNIFORM CALL DISTRIBUTION	
PATH NAME	**PURPOSE**
terminal-change terminal display unit	Displays or prints the group members being monitored by the 106B display unit.
terminal-change class-of-service attributes	Assigns UCD/DDC membership to a voice terminal class of service. Also, use this screen to assign the stop hunt option to a UCD/DDC member's class of service.
terminal-change extensions attributes	Assigns the voice terminal class of service to an extension number, to administer the associated extension numbers to the primary extension, and to administer the hunt-to assignment to an extension.
terminal-change group call-distribution attributes	Administers the characteristics of a UCD group. Also assigns ''circular'' to the type-of-hunting field.
terminal-change group call-distribution members	Adds or removes members to/from a UCD group.

The following are the applicable CSM Command Paths utilizing the **admin** area of TCM or FM.

CSM SCREENS — MASKS UNIFORM CALL DISTRIBUTION		
APPL'N	**OBJECT**	**PURPOSE**
TCM	extension	Administers the equipment location and class of service of each member's extension and administers hunt-to assignments to each member's extension.
TCM	associated-extension	Associates an extension with an existing primary extension and assigns a name display to the associated extension.
TCM	class-of-service	Assigns UCD/DDC membership to a voice terminal class of service and assigns the stop-hunt option to the UCD/DDC member's class of service.
FM	ucd-announcement	Administers announcement treatment for calls that enter a UCD queue. These calls receive an announcement after a time-out, then receive a second announcement after another time-out, depending on how the announcement treatment is administered. Administers delay, city-of-origin or queue-of-origin announcements that inform agents of the source of the incoming call.
TCM/FM	ucd-grp	Administers UCD groups and their attributes. Attributes include MCS channel, ICI message number, queuing trunk group, inflow and outflow level; hunting pattern; and supervisor extension number. (The contact interface trunk group must be added using trk-grp-add.)
FM	ucd-lamp	Assigns a board and circuit location for a lamp to a trunk terminating at a UCD group.
TCM/FM	ucd-members	Administers single or multiple (up to 40) members of UCD groups.
FM	ucd-status-lamps	Administers lamps that display UCD member status information.

CSM SCREENS — MASKS UNIFORM CALL DISTRIBUTION (Contd)		
APPL'N	**OBJECT**	**PURPOSE**
FM	term-trk-grps	Assigns trunk groups to terminate at the UCD group, and changes, displays, or removes the termination information.
FM	trk-grp	Assigns the delay recorded announcement trunk to an equipment location, and assigns the contact interface trunk group to an equipment location.
TCM	console-messages	Designates the desired alphanumeric display or UCD/DDC calls that reach an attendant.
TCM/FM	first-digit	Assigns the first digit of the feature dial access codes and extension number groups (if required).
TCM/FM	dial-access-code	Assigns the UCD feature dial access code.
TCM	number-groups	Administers one or more extension number groups.

VARIABLE FORMAT CALL DETAIL RECORDING

DESCRIPTION

The VFCDR (Variable Format Call Detail Recording) feature is used for recording call detail information that helps manage telephone service. The call detail information is generated by the switch, and then sent to a 3B2 CDRU or other peripheral for local storage and processing. The call detail information is eventually output on a terminal or printer for analysis by people familiar with call costing, trouble analysis, abuse detection, and network optimization.

This feature is a major enhancement of the SMDR (Station Message Detail Recording) and CMDR (Centralized Message Detail Recording) features. Unlike SMDR and CMDR, VFCDR records data items (call elements) in virtually any desired order or format. In other words, VFCDR is not a fixed format where a restricted set of data items are recorded in one particular order. See the ''**Recordable Data Items**'' section for a detailed description of data items.

Call data is generated by the switch for each incoming or outgoing trunk seizure. The unformatted call data is processed by the PCC (Processor Communications Circuit) and sent across the PCC port. See Figure 126-1 and Figure 126-2.

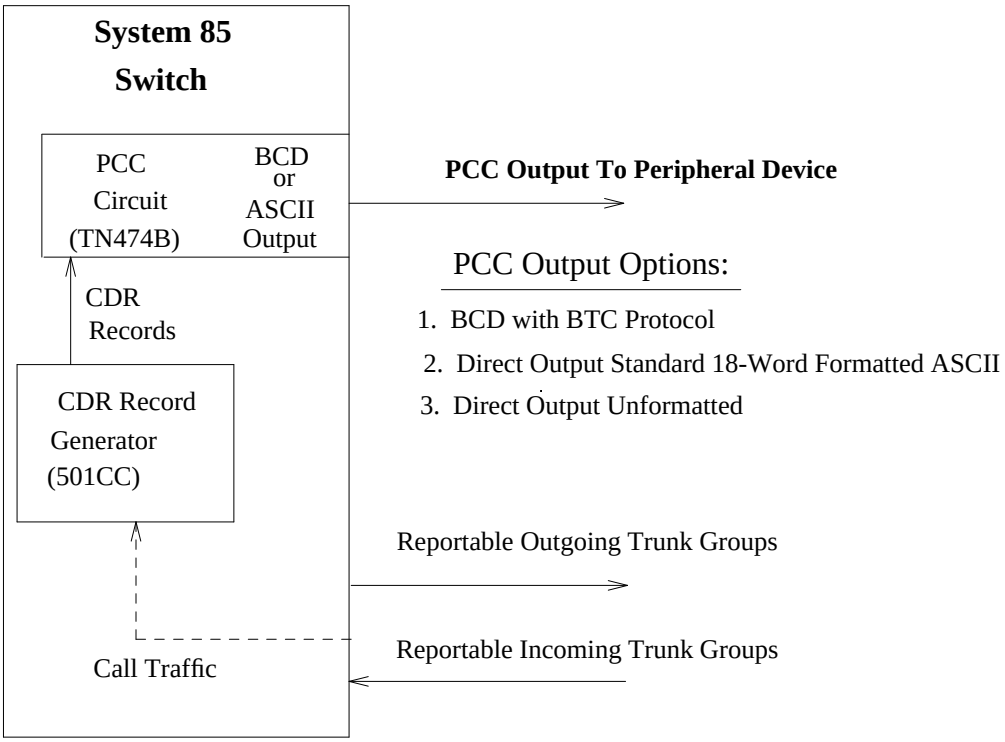

Figure 126-1. CDR Record Generation

Once the CDR (Call Detail Recording) records are sent across the PCC port, the peripheral equipment, as shown in Figure 126-2, receives the records for storage or further processing. Only one of three possible PCC output options can be used at a time, thus only one of the configurations shown in Figure 126-2 would be implemented for a particular switch.

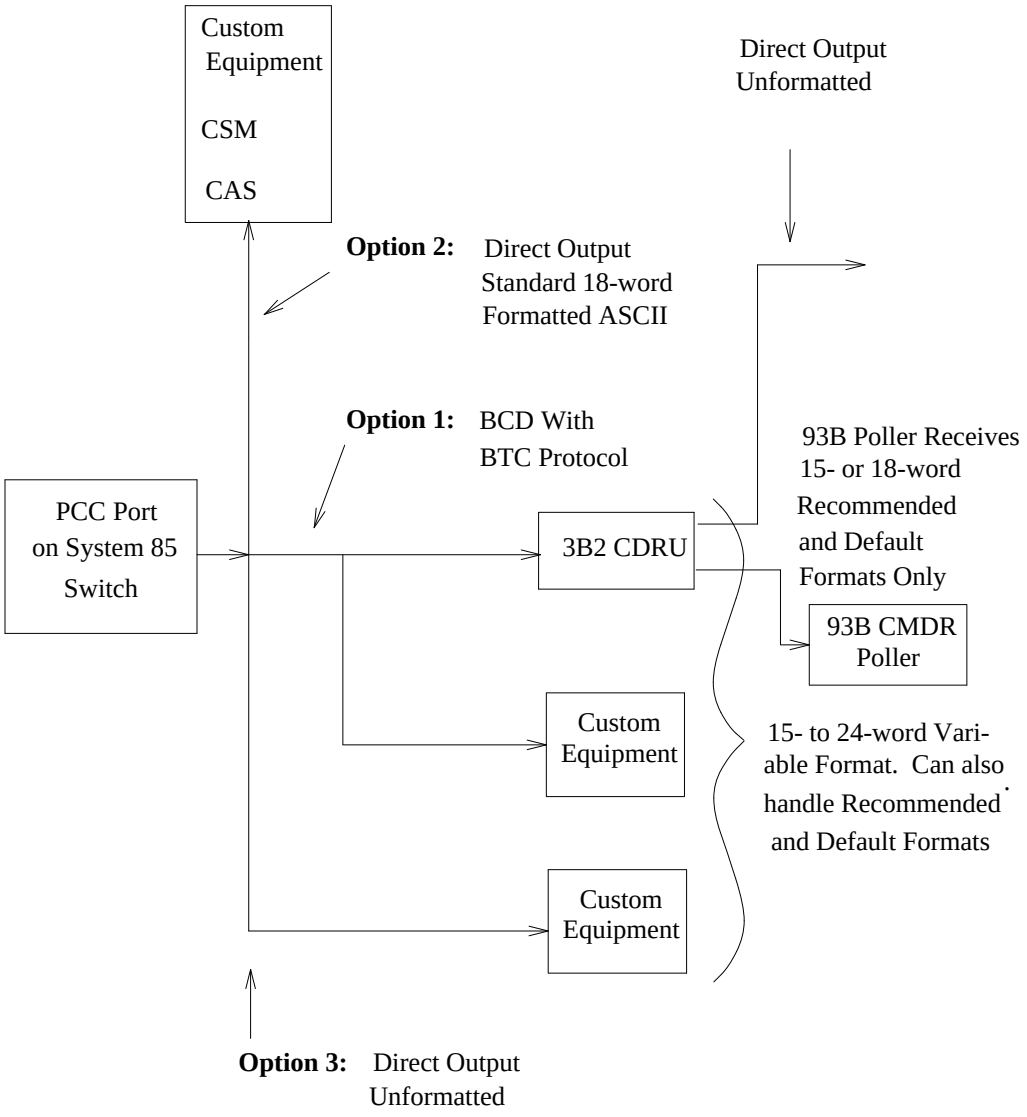

Figure 126-2. PCC Port Output Options

Feature History and Development

In the past, the process of collecting and recording CDR records has gone by several feature names. This was necessary to make the VFCDR system users of CDR aware of the backward compatibility with older adjuncts; therefore, the older CDR features (SMDR and CMDR) maintained their names.

VFCDR is a major enhancement of the SMDR and CMDR (sometimes called CSMDR) features. The VFCDR feature is new to R2 V4. VFCDR is an enhanced version of the SMDR and CMDR features, in which a fixed record format of 15 or 18 words was no longer adequate for some facilities' needs. Rapid advances in telecommunications technology and standards, such as the development of ISDN (Integrated Services Digital Network) and Tenant Services, have created a need for flexible formatting of CDR records.

Records may be up to 24 words where there may be more than one item in each word. It is also possible to have one data item existing in more than one word.

Recordable Data Items

This section describes all the data items available with R2 V4. A data item is a piece of information about a trunk call. For example: the dialed number, the trunk-group DAC, and the node number are some of the data items that the switch records. This information is useful to people concerned with call billing, network optimization, etc. One of the advantages VFCDR has over the other CDR features is that the following data items can be recorded in any order. The following bullet list explains each data item in detail.

ENHANCED R2 V3 DATA ITEMS FOR R2 V4

This sub-section describes the data items as they existed prior to System 85, R2 V4 and the enhancements made to them. New Data Items of System 85, R2 V4 are discussed in the next three sub-sections.

The following data items are available in the R2 V4 call record.

- **Account Code**. This field contains a terminal user-dialed account number that further identifies a specific call. The capability to assign a flexible account code, up to 15 digits, was introduced in System 85, R2 V3. If an administrator administers an account code greater than five digits, it overrides other fields such as authorization code, time-in-queue, and/or the FRL in the record. If account codes are not present in the call, this field is blank in the call record.

  The administrator also has the ability to assign *FEAC (Forced Entry of Account Codes)*. FEAC is a CDR enhancement developed in R2 V3 that forces the terminal user to enter an account code for toll calls. FEAC is useful for billing communications services to accounts (e.g., a law firm that has many clients in which the firm wants to allocate phone services to each client's account).

  FEAC call accounting can be administered on three levels:

  - A user's terminal class of service that has been assigned FEAC for toll calls. Toll calls are characterized by the following:

    — When the first digit of a CO (Central Office) call is a one.

    — When an area code is dialed.

— When the dialed office code is administered as a toll office code.

See ''*FEAC (Forced Entry of Account Codes) Administration*'' under the ''**ADMINISTRATION**'' section.

- A trunk group that has been assigned FEAC for all calls accessing that trunk group.
- A system basis when an ARS is assigned FEAC.

- **ARS Control Mode**. The ARS Control Mode changes and sets the ARS plan (Time Of Day Pattern plan number 1, 2, or 3) as administered. The records that contain Control Modes are special call records that are sent across the CDR ports after a Control Mode change or an ARS plan change has been made. A 0000 in the Control Mode field of the record indicates an ARS plan under control of the system clock (automatic). A 0001 indicates an ARS plan under manual control (attendant controlled), and a 0002 indicates an ARS plan under clocked manual override (automatic or attendant controlled).

  It is possible to output the Control Mode data item in two different types of call detail records, these are:

  — **ARS Control Mode Record**. When a Control Mode change is administered, one or two special records are sent across the PCC. The first record contains the status of the Condition Code (''D'' if administered), and the new status of the Control Mode after the change was made. A second record is sent only if the change in Control Mode caused an ARS Plan Change. If the ARS plan changes due to the Control Mode change, the second record sent contains the status of the Condition Code, Control Mode, and the new ARS plan in effect.

  — **ARS Plan Change Record (Time-of-Day Pattern Set)**. When an ARS plan change is initiated (by the attendant or automatically), two special records are sent across the PCC. The first record contains the status of the ARS plan, Condition Code (''D'' if administered), and Control Mode (if the Control Mode data item is administered) before the change was made. The second record sent contains the status of the ARS plan, Condition Code, and Control Mode after the change was made.

- **Authorization Code**. This 7-digit field further identifies the call and indicates the outgoing calling privileges of the caller. If authorization codes are not used, this field is blank.

- **Call Duration**. This field measures the amount of time a call was connected within 6 seconds of accuracy unless answer supervision is present (see answer supervision). Call Duration also indicates if a call was successfully completed. If a call duration of zero shows up in the call record, the called party either was busy on another call or didn't answer. Call Duration contains a total of 4 characters, representing hours (0 through 9), minutes (0 through 59), and 6-second intervals within each minute (0 through 9). The call-duration timing in the CDR record varies with the type of call as follows:

  — System 85, R2 V3 and later releases have the Variable Call Completion Threshold feature that can set the delay time between end of dialing and start of charging on either a per-trunk group or per-system basis. The administrable time can be from 1 to 99 seconds in 1-second increments. If neither trunk group or system time is administered, a fixed 6-second default time is used.

— For CO, Tie, and FX trunk groups, there is a timing parameter in System 85, R2 V3. that can be assigned on a per-trunk group or a per-system basis. In the case of an AAR/ARS call over a CO, Tie, or FX trunk group, the call-duration timing scheme for AAR/ARS overrides the individual timing assigned to the CO, Tie, or FX trunk group.

— Calls can be queued if the call-processing software is unable to find any available trunks. Queued calls do not start timing until they come out of queue. As a result, the call-duration time does not include the time in queue.

- **Calling Number**. Prior to System 85 R2 V4, the Calling Number field was used to record the trunk-group DAC for incoming calls. Since ISDN can provide the calling number for an incoming call, the calling number field will no longer be available for incoming trunk groups. Hence, a new field, called the Incoming Trunk Group DAC will be available and can be up to 10 digits long.

- **Condition Code**. The condition code is a single digit alpha or numeric character that categorizes the information represented in the call record. Table 126-A contains descriptions and condition codes for 9-track tape and direct output.

Table 126-1. VFCDR Condition Codes

Output of 3B2 CDRU and PCC Direct Output	DESCRIPTION
1	Attendant handled calls (except conference calls).
2	Trunk groups reporting to CDR.
3	Trunk groups not reporting to CDR.
4	A long hold time call (10 hours or longer). Calls with a duration of 9 hours, 59 and 9/10 minutes are reported each 10-hours. When they end, a final record with the remaining call time is reported.
5	Maintenance Test data record. *Ignore* in call data compilations.
6	System reload. *Ignore* in call data compilations.
7	Calls handled by the ARS or AAR features (overrides condition codes 1, 9, and C).
8	Calls that have been handled via the Queuing feature.
9	Incoming or tandem trunk call. Also for outgoing connection on a conference call.
Blank	Outgoing and tie trunk calls.
C*	Conference Call—Attendant 6-Party. Separate records are produced for each outgoing conference connection.
D*	ARS plan change and Control Mode change records.
E*	Unsuccessful call, either incoming or outgoing. Includes call failures for any reason except insufficient FRL.
F*	Unsuccessful outgoing call due to insufficient FRL.

* If more than one cell is administered to the condition code field, the decimal equivalent of the Hexadecimal value shows up in the record (i.e., F = 15).

- **Dialed Number**. This field contains up to 15 digits and is the number dialed by the terminal user.
- **Feature Flags**. This 1-digit hexadecimal field represents the active and inactive features that may be recorded by CDR. Notice in Table 126-B that more than one feature flag can be active at a time. If none of the Feature Flags are active for a particular call, a zero will show up in the Feature Flags field of the call record.

  — Bit reserved for future use.

  — Answer Supervision is a Feature Flag bit that was added in System 85, R2 V4. Answer Supervision is a condition which identifies when the called party answers a call. Answer Supervision is used to calculate call duration accurately instead of estimating call duration as with the R2 V3 administrable default timer.

  Answer Supervision is available on outgoing, or incoming and outgoing trunks with E&M or ISDN signaling.

  If trunks cannot be administered with Answer Supervision, an approximate call duration is still recorded (see ‘‘Call Duration’’ data item in this section).

  — Queuing Bit is active when a call has been queued. Table 126-B illustrates the hex code that represents active and inactive conditions for each feature flag.

  — Voice/Data Call Bit is active during a Voice Call. An inactive condition represents a Data Call. See Table 126-B for actual hexadecimal output from the switch.

Table 126-2. Hexadecimal Code for Active and Inactive Feature Flags

Hexadecimal Code	Feature Flags			
	Reserved For Future Use	**Answer Supervision**	**Ringback Queuing**	**Data Call**
0	Inactive	Inactive	Inactive	Inactive
1	Inactive	Inactive	Inactive	Active
2	Inactive	Inactive	Active	Inactive
3	Inactive	Inactive	Active	Active
4	Inactive	Active	Inactive	Inactive
5	Inactive	Active	Inactive	Active
6	Inactive	Active	Active	Inactive
7	Inactive	Active	Active	Active

Note: If Ringback Queuing is not active, it is still possible that Off-Hook Queuing is Active. If Data Call is Inactive, then Voice Call is Active.

- **FRL (Facilities Restriction Level)**. This field contains a 1-digit number that indicates the level of service associated with the calling privileges for the call. This field is the FRL of the authorization code used for the call unless no authorization code is used, in which case it is the FRL of the originating extension. FRLs are supplied for ARS/AAR calls and for Remote Access calls if FRL is active for Remote Access. If no authorization code is used, the FRL field is blank.
- **Incoming Circuit ID**. This field identifies the trunk within a trunk group which is used to carry incoming and tandem calls. This field was enlarged from two digits to three digits in System 85, R2 V3. If the call is outgoing, the Incoming Circuit ID field is blank.

  The 100s digit of the Incoming Circuit ID has its own encode.
- **IXC (Interexchange Carrier) Code**. This 3-digit field identifies for a particular call, the long-distance carrier — i.e., the vendor of ''interexchange service'' — such as AT&T Communications, MCI Communications, or US Sprint Communications. This field in the CDR record is administered so that a ''1'' represents the vendor for that particular switch. Other vendors would be recorded on that switch as a 2 or a 3, etc. Otherwise, the IXC Code field is blank.
- **Outgoing Circuit ID**. This field identifies the trunk within a trunk group which is used to carry outgoing calls. This field was enlarged from two digits to three digits in System 85, R2 V3. If there is no Outgoing Circuit ID, the field is blank.
- **Time-in-Queue**. This 2-digit field indicates the time that the outgoing call has spent in a trunk group's queue. It represents minutes for ringback queue or tenths of minutes for off-hook queue. When a ringback and off-hook queue are both provided on the same outgoing trunk, voice terminals use the ringback queue, and trunks use the off-hook queue. This field is blank if no queuing is used.
- **Trunk Dial Access Code Dialed**. This 4-digit field was previously 3 digits. It is used only for outgoing or tandem calls, and can be the Automatic Route Selection access code or the access code of a specific trunk group. If this code is the same as the Trunk Dial Access Code Used, the Trunk Dial Access Code Used field will appear blank.
- **Trunk Dial Access Code Used**. This 4-digit field was previously 3 digits. It is used only for outgoing or tandem calls, and contains the access code of the actual trunk group that the call was routed over. *If the Access Code Dialed field and the Access Code Used field have the same value, the DAC-used field appears blank.*
- **Time-of-Day Pattern Set (ARS Plan in effect)**. This 1-digit field appears in the call records when an ARS plan change is initiated (by the attendant or automatically). When the ARS plan is changed, two special records are sent across the PCC.
- **10,000ths Digit of Calling Number**. This field is the fifth (10,000ths) digit of the calling number. It is blank if the 5-digit dial plan is not administered.

- **4th Digit Dial Access Code.** The Dialed DAC and DAC Used fields are adjusted to handle the capabilities of the 4th digit DAC (Dial Access Codes) enhancement. The 4th Digit Dial Access Code has a unique encode and must be administered if the 4th digit is to be recorded.

  If these DAC dialed and DAC used fields are administered for less than the number of digits in the DAC, only the right-most digits are recorded. The number of digits recorded depends on the administered data field lengths.

  If the Dialed DAC and DAC Used are the same for a particular call, the CDR records the DAC in the DAC dialed field only.

  The 4-digit DACs are supported in the recommended standard 24-word and variable format CDR records.

  Status Messages. With the variable format CDR record, a maximum of 24 DACs can be administered to a single status message. These status messages send the DAC of trunk groups being recorded by CDR. The maximum number of DACs that can be administered is dependent on the DAC length and the number of words per CDR record. DACs of one, two, three, or four digits are supported in R2 V4. See ''THE SWITCH RELOAD AND REPORTABLE TRUNK GROUP RECORDS'' section.

  If the DAC length is greater than the data field length, only the right-most digits are recorded in the CDR record. Otherwise, the entire DAC is recorded.

NEW R2 V4 DATA ITEMS

- Time of Day (hours and minutes) at call disconnect. Before R2 V4, the time of day was inserted into the CDR by the peripheral hardware. Now, this can be done by software using the 24-hour system. For example, 2:00 a.m. is shown as 0200; 2:00 p.m. is shown as 1400. For more information, see the discussion on *PCC Time Stamping* in the ''**CONSIDERATIONS**'' section.

  Time-of-Day hours and minutes have separate encodes.

- Date (day of month, month, and year). Before R2 V4, the date was inserted into the CDR by the peripheral hardware. Now it can be done by software. Each field is a separate, 2-digit field, and they may be administered in any order.

  The elements of the date parameter (day, month, and year) have separate encodes.

  All of the date fields have unique encodes.

- Incoming Trunk Group Dial Access Code. This field, an addition for R2 V4, contains the DAC of an incoming trunk call. This field can contain up to four digits, depending on the administered field length. If the field length is administered for less than the DAC length, only the right-most (least significant) digits are recorded.

- Precedence Level used in an AUTOVON call. The AUTOVON network is a military network which provides preemption capabilities for calls related to national defense. One of five possible precedence levels are available for assignable trunks.
- Attendant Console. This field contains the attendant-console number if the call is handled by an attendant. If no attendant is involved in the call, the Attendant Console field appears blank.
- Node Number. This field contains the DCS node number of the switch generating the record. The field is administered in Procedure 275, Word 3. This data item is used for networked switches.
- QDN/VDN (Queue Directory Number/Vector Directory Number) field. The QDN or the VDN (Vector Directory Number) is recorded by the CDR record as the called number instead of the answering agent's extension number. VDN was developed to provide the customer with a method of allocating network costs to projects, rather than agent's individual extension numbers.

  QDNs are used with ACD (Automatic Call Distribution) splits, and VDNs are used with Call Vectoring. The switch records either the QDN or the VDN based on the following criteria.

  — If ACD is being used without a vectoring environment, the CDR records QDN.

  — If Call Vectoring is used without an ACD environment, the CDR records the VDN.

  — Also, if Vectoring in an ACD environment is used, the CDR records the VDN.
- Agent Login. If more than one agent is using a station during the course of a day, the VFCDR feature can be administered to record an agent's login. The login number could be as many as four digits long.

DATA ITEMS FOR THE INTEGRATED SERVICES DIGITAL NETWORK/PRIMARY RATE INTERFACE FEATURE

- **ISDN NS (Integrated Services Digital Network Network Service)**. ISDN NS identifies the network service [such as SDN (Software Defined Network), WATS, or MEGACOM Service] used to complete an outgoing trunk call. The ISDN NS field does not apply to all outgoing trunks.
- **BCC (Bearer Capability Class)**. The BCC feature identifies voice and data calls for efficiency in billing accuracy, network optimization, and system troubleshooting. The call characteristics are detected by BCC and recorded in the CDR Record. The BCC is identified as one of the following five different call types:

  — Voice or Voice Grade

  — Mode 0 (64 Kbps clear)

  — Mode 1 (56 Kbps synchronous)

  — Mode 2 (< 19.2 Kbps synchronous or asynchronous)

  — Mode 3 (for LAPD protocol and circuit/packet switched data).

- **Incoming Trunk Group DAC**. Prior to System 85 R2 V4, the Calling Number field was used to record the trunk-group DAC for incoming calls. Since ISDN can provide the calling number for an incoming call, the calling number field is no longer provided for incoming trunk groups. Hence, a new field will be available called the Incoming Trunk Group DAC. The new Incoming Trunk Group DAC field can be up to 10 digits long.

DATA ITEM FOR THE TENANT SERVICES FEATURE

- **Extension Partition Number**. A new addition to the CDR record has been developed to record the extension partition extension-originated call. An extension partition number is a number assigned one or more extensions. When a caller accesses a group's partion number, the caller is routed to that group. This new data item is only available in a variable format CDR record.

  If a call is originated from over Remote Access facilities, the extension partition corresponding to the dialed authorization code (if any) is recorded in this field.

  If the call is DID (Direct Inward Dialing), this field contains the extension partition of the extension or LDN (Listed Directory Number) to which the call terminates.

  If the call tandems to another outgoing trunk or if the extension partition is not determined due to attendant assistance or other reasons, this field is set to an ''A'' (hexadecimal).

  In all cases, the extension partition field agrees with the extension number in the calling number or called number fields.

The CDR Record Formats and Their Structures

This section describes the different types of CDR records, their formats, and the word structure that all the formats use.

THE SWITCH RELOAD AND REPORTABLE TRUNK GROUP RECORDS

The first record sent over the PCC port is a System Reload Record. This record is sent every time there is a power hit or a switch failure. The record sends a condition code, indicating that the following messages are to be ignored. The switch reloads the software and sends a set of Reportable Trunk Group Records, indicating that the following records are valid.

If a Duplicated Common Control is installed, no records are lost if the primary fails because the backup Common Control automatically takes over. If a power hit occurs on a Duplicated Common Control, the records that haven't yet been sent out over the PCC port are lost.

The Reportable and Nonreportable trunk-group records are sent by the switch to the PCC circuit at the time CDR is activated or when the switch's software is reloaded. It is required that all trunk groups reporting to VFCDR are assigned a DAC. Encode 52 (first Dial Access Code of the CDR record) must be administered in the CDR format for the trunk-group records to be sent. CDR is activated by the attendant dialing the ''SMDR-Start'' DAC or the ''SMDR-Stop'' DAC. The first record sent is a Condition Code 2 record. The ''2'' means that ''the following list of records with Condition Code 2 consist of DACs assigned to trunk groups that are reporting (or providing call data) to CDR (999 possible trunk groups in R2 V4).''

Following the Condition Code 2 records is a list of Condition Code 3 records. These records contain the DACs of all the unmonitored trunk groups. Note that CDR will send as many records as necessary to output all the reporting and nonreporting trunk groups with DACs associated with them.

The administered CDR format is being recorded until an ARS plan change is initiated, or the attendant dials the ''SMDR-Stop'' DAC. Once the plan change is complete, the switch sends another set of Reportable and Non-Reportable Trunk Group Records (Condition Codes 2 and 3). If the attendant dials the SMDR-Stop DAC the switch sends another set of Reportable and Nonreportable Trunk Group Records.

VARIABLE, RECOMMENDED STANDARD, AND DEFAULT FORMATS

Call information (data items) is collected by the switch in a buffer called the CDR buffer. This buffer supports all of the CDR features (VFCDR, CMDR, and SMDR), but not more than one at a time. The specific layouts of data in a CDR record are organized into distinct *formats*. There are six possible formats available across the PCC port:

— Recommended Standard 18-Word ISDN (refer to Figure 126-3)

— Recommended Standard 24-Word (refer to Figure 126-4)

— Variable Format (Refer to *''ADMINISTRABLE DATA ITEMS FOR THE VFCDR FEATURE''* in the **''Recordable Data Items''** Section).

— 15-Word Default

— 18-Word Default.

Prior to R2 V4, CDR records were of fixed format and size (either 15 or 18 words long) consisting of an ordered sequence of fields with each field having a certain width. A new CDR structure of variable length (up to 24 words) and variable format is introduced in R2 V4 to provide customers the flexibility to customize their CDR record format, and to meet the growing need for additional data items and new services, such as ISDN (Integrated Services Digital Network) and Tenant Services. The variable CDR record allows customers to define record contents by choosing from a set of available data items. The call data items can be arranged in any order and combination to provide the customer with complete record-formatting flexibility.

R2 V4 supports five CDR word length options over the PCC port:

- *Variable Format*- A variable format CDR record from 15 to 24 words in length, tailored to a specific system. **Note: This format must be administered in Procedure 288, Word 1 and 2**.
- *The Recommended Standard 18-Word ISDN Format*. An ISDN field replaces the time-in-queue field). **Note: This format must be administered in Procedure 288, Word 2**. The recommended standard is shown in Figure 126-3.

- *The Recommended Standard 24-Word Format*. A format that can be used with CSM (Centralized System Management), 3B2 CDRU, and custom designed equipment. **Note that this format must be administered in Procedure 288, Word 2**. The recommended standard is shown in Figure 126-4.
- R2 V4 also supports the *15- and 18-word default (fixed) formats* for backward compatibility. **These formats are selected in Procedure 288, Word 1**. Refer to the SMDR and CMDR features in this manual for more information on the default formats.

The recommended standard 18-word ISDN, the recommended standard 24-word, and the variable format records are created by administering individual fields (i.e., they must be defined item by item using the MAAP, the SMT, or CSM). Procedure 288, Word 2 is used for item-by-item administration.

VFCDR WORD STRUCTURE

The VFCDR output is variable between 15- and 24-word formats to provide for a variety of applications. All formats use the 4-byte, 16-bit word structure shown in Table 126-C.

Table 126-3. Call Detail Record Word Structure

FIELD ID	**Byte 4**	**Byte 3**	**Byte 2**	**Byte 1**
BITS USED	15 14 13 12	11 10 09 08	07 06 05 04	03 02 01 00
CONTENTS	Opcode/Call Data	Call Data	Call Data	Call Data

OPCODES

The VFCDR feature doesn't require opcodes if used in conjunction with the 3B2 CDRU. If opcodes are not used, call data can be inserted into the opcode field. The opcode (used for backward compatibility) is used for hardware control and on-line error checking (identifies the end of a record), and is stored in the storage devices. However, this opcode is never included in the outputs received by the polling devices. The last 12 bits, bits 11 through 0, are arranged in 4-bit cells that contain coded data representing CDR data items or ''fields.'' The 24-word record and the variable record, however, do not require any opcodes, and in this way differ from the other CDR records.

ENCODES

R2 V4 introduced the use of encodes as data item identifiers to enhance processing. Instead of limiting the switch and the storage unit to one specific CDR format, encodes were introduced as data item identifiers. Each encode identifies the type of data item, the length of the data item (number of characters), and the starting position of that data item within the CDR record generator. Each data item has an encode that the switch CDR processor recognizes (i.e., encode 30 = node number). The encodes are used for internal processing and are never transmitted across the link between the switch and 3B2 CDRU (unlike opcodes, and thus transparent to the VFCDR system user). Refer to the ''**FEATURE ADMINISTRATION**'' section.

VARIABLE ACCOUNT CODE LENGTH

Variable and Recommended Standard Formats. When a nondefault format is administered, there could be room in the record for the following fields— 15-digit Account Code, Authorization Code, Time-in-Queue, and FRL. The customer is responsible for administering the CDR format to prevent overlap of these fields. This is an example of the importance of carefully planning the record layout (see ‘‘**FEATURE ADMINISTRATION**’’).

Standard Default Format. When the standard 15- or 18-word default format is administered, either the traditional 5-digit or an expanded (6- to 15-digit) Account Code is implemented. If the expanded Account Code is implemented (as provided by an R2 V3 enhancement), the Authorization Code, Time-in-Queue, and FRL (Facilities Restriction Level) fields might not be formatted in the CDR record, depending on the account code length. In other words, the Authorization Code, Time-in-Queue, and FRL fields are occupied by the expanded account code respectively.

ADMINISTRABLE DATA ITEMS FOR THE VFCDR FEATURE

VFCDR Data items can be sent in any order or combination of 15 to 24 words. The following list is the set of 36 data items (includes all the dial access codes) administrable to variable format in Procedure 288 (refer to the ‘‘**FEATURE ADMINISTRATION**’’ section for details).

1. Call Duration Hours
2. Call Duration Minutes
3. Call Duration 10ths/Minute
4. Condition Code
5. Trunk Access Code Dialed
6. Trunk Access Code Used
7. Dialed Number
8. Calling Number*
9. Account Code*
10. Authorization Code
11. Time in Queue
12. Facilities Restriction Level
13. 10,000ths Digit of Calling Ext.
14. Incoming Circuit ID
15. Feature Flag
16. Outgoing Circuit ID
17. Outgoing Circuit ID (100s digit)
18. Incoming Circuit ID (100s digit)
19. Interexchange Carrier Code
20. Time of Day - Hours
21. Time of Day - Minutes
22. Date - Month
23. Date - Day
24. Date - Year
25. Incoming Trunk Dial Access Code*
26. Precedence Level
27. Attendant Console Number
28. ISDN Network Service
29. Extension Partition Number
30. Node Number
31. Bearer Capability Class
32. QDN/VDN
33. Agent Login
34. Control Mode (Encode 50)*
35. Time-of-Day Pattern Set (Encode 51)
36. 1st through 24th Dial Access Code (Encodes 52 through 75)

* Data entry in CDR record is left justified.

Table 126-D is an example of some data items selected with variable format. Included in the table are some assorted calls to simulate a customer processed and formatted output.

Table 126-4. Example Data Items in a Formatted VFCDR Record for Miscellaneous Call Types

Call Type	Data Item											
	VDN/ QDN	**Cond. Code**	**Feat. Flags**	**Outgoing Trunk DAC**	**IXC**	**Dialed Number**	**Calling Number**	**Node Number**	**Incoming Trunk DAC**	**Console Number**	**Call Duration**	**Agent Login**
Outgoing ARS Call		7	4	621	1	1-317-265-7894	86113	1			0105	
Outgoing CO Call		A	0	621	2	357-7192	86181	1			0315	
Outgoing Tie Trunk Call		A	4	183	1	1-303-451-1857	86374	1			0638	
Incoming Tie to ACD Call	82000	9	0		–	86374	439	1	439		0972	1234
Incoming CO to Attd to ACD Call	82000	1	0		–	1-602-341-7894	621	1	411	3	0333	1234
Incoming DCS Call		9	0		–	82600	111	1	111		0235	
Outgoing DCS Call		A	0	711	1	87766	434	1			0237	
Incoming ISDN Call		9	0		2	357-2323	214	1	214		0875	
Outgoing ISDN Call		A	7	337	288	624-2007	82005	1			0138	

Note: All the possible data items are not included. Refer to the **Recordable Data Items** section for more information. The blank positions in the chart represent not applicable data.

ISDN PERIPHERAL SUPPORT

The storage and output options for the 18-word ISDN record are the same as those for the 18-word default record, described previously. As for processing of the ISDN record, currently it is not supported by TELESEER SMDR and AT&T CAS. The 3B2 CDRU and CSM are the only AT&T systems that can process the ISDN record. For customized processing, customers can choose from host processors to other vendor equipment that might be modified to support the recommended standard 18-word ISDN record. Figure 126-3 illustrates the recommended standard 18-word ISDN record.

	15 14 13 12	11 10 09 08	07 06 05 04	03 02 01 00
01	Opcode	Hours	Call Duration Minute (Xx)	Minute (xX)
02	Opcode	10th Minute	Condition Code	IXC
03	Opcode	IXC		Access Code 1/2
04	Opcode	Access Code 1/2		Dialed Number
05	Opcode	Dialed Number		
06	Opcode	Dialed Number		
07	Opcode	Dialed Number		
08	Opcode	Dialed Number		
09	Opcode	Dialed Number		Calling Number
10	Opcode	Calling Number		
11	Opcode	Account Code digit 1	digit 2	digit 3
12	Opcode	Account Code digit 4	digit 5	Authorization Code
13	Opcode	Authorization Code		
14	Opcode	Authorization Code		
15	Opcode	ISDN Network Service		
16	Opcode	5th Digit, Calling Ext	Incoming Circuit ID digit 1	digit 2
17	Opcode	Feature Flag* R A Q D	Outgoing Circuit ID digit 1	digit 2
18	Opcode	Out Circuit ID digit 3	In Circuit ID digit 3	FRL

***Feature Flag:**
R = Reserved For Future Use
A = Answer Supervision
Q = Queuing Type
D = Data Call

Figure 126-3. Recommended Standard 18-Word ISDN Record

RECOMMENDED STANDARD 24-WORD FORMAT

This record contains all the fields that would normally be required by any System 85, R2 V4 CDR application. The 24-word record includes the following fields: 15-digit account code, 7-digit authorization code, 10-digit calling number field, 4-digit DAC, ISDN-NF, Bearer Capability Class, Answer Supervision indication, node number, and the attendant console number.

The 24-word recommended standard format record is constructed on the switch by administration of individual fields. The options available for the administration of the 24-word record are similar to those for the recommended standard 18-word ISDN format described previously.

The 3B2 CDRU and CSM are the only customer systems provided by AT&T that support the processing of the 24-word recommended standard record. Customers can choose from host processors to vendor processing for customized processing of the data, provided their systems have been modified to receive the administered format.

	15 14 13 12	11 10 09 08	07 06 05 04	03 02 01 00
01	Hours	Call Duration Minute (Xx)	Minute (xX)	10th Minute
02	Condition Code	Access Code Dialed digit 1	digit 2	digit 3
03	AC Dialed digit 4	Access Code Used digit 1	digit 2	digit 3
04	digit 4	Dialed Number digit 1	digit 2	digit 3
05	digit 4	Dialed Number digit 5	digit 6	digit 7
06	digit 8	Dialed Number digit 9	digit 10	digit 11
07	digit 12	Dialed Number digit 13	digit 14	digit 15
08	digit 1	Calling Number digit 2	digit 3	digit 4
09	digit 5	Calling Number digit 6	digit 7	digit 8
10	Calling Number digit 9	digit 10	Account Code digit 1	digit 2
11	digit 3	Account Code digit 4	digit 5	digit 6
12	digit 7	Account Code digit 8	digit 9	digit 10

Figure 126-4. Recommended Standard 24-Word CDR Record (Sheet 1 of 2)

	15 14 13 12	11 10 09 08	07 06 05 04	03 02 01 00
13	digit 11	Account digit 12	Code digit 13	digit 14
14	Account Code digit 15	Authorization Code digit 1	digit 2	digit 3
15	digit 4	Authorization digit 5	Code digit 6	digit 7
16	Time in Queue		FRL	In Circuit ID digit 1
17	Incoming Circuit ID digit 2	digit 3	Outgoing Circuit ID digit 1	digit 2
18	Out Circuit ID digit 3	Feature Flags* R A Q D	Attendant Console digit 1	digit 2
19	Incoming Trunk digit 1	digit 2	Group digit 3	DAC digit 4
20	Node Number digit 1	digit 2	ISDN Net. Service digit 1	digit 2
21	Net Serv. digit 3	digit 1	IXC digit 2	digit 3
22	BCC			
23	(reserved for future use)			
24				

***Feature Flags:**
R = Reserved For Future Use
A = Answer Supervision
Q = Queuing Type
D = Data Call

Table 126-5. CDR Default and Recommended Standard Formats

		STANDARD FORMATS			
Encode	**CDR Data Item**	**15-word default**	**18-word default**	**18-word ISDN**	**24-word**
1	Call Duration Hours	x	x	x	x
2	Call Duration Minutes	x	x	x	x
3	Call Duration 10ths/Minute	x	x	x	x
4	Condition Code	x	x	x	x
5	Trunk Access Code Dialed	x	x	x	x
6	Trunk Access Code Used	x	x	x	x
7	Dialed Number	x	x	x	x
8	Calling Number*	*	*	*	x
9	Account Code	x	x	x	x
10	Authorization Code	†	†	x	x
11	Time in Queue	†	†		x
12	Facilities Restriction Level	†	†	x	x
13	10,000ths Digit of Calling Number		x	x	x
14	Incoming Circuit ID		x	x	x
15	Feature Flags		x	x	x
16	Outgoing Circuit ID		x	x	x
17	Outgoing Circuit ID (100s digit)		x	x	x
18	Incoming Circuit ID (100s digit)		x	x	x
19	Interexchange Carrier Code		x	x	x
20	Time of Day, Hours				
21	Time of Day, Minutes				
22	Date, Month				
23	Date, Day				
24	Date, Year				
25	Incoming Trunk Dial Access*	*	*	*	x
26	Precedence Level Digit				x
27	Attendant Console Number				x
28	ISDN Network Service			x	x
29	Extension Partition Number				
30	Node Number				x
31	Bearer Capability Class				x
50	Control Mode				x
51	Time of Day Pattern Set				
52-59	Dial Access Codes 1-8	x	x		
60-75	Dial Access Codes 9-24				

* For all default 15- and 18-word record formats, the Incoming Trunk Dial Access Code is located in the same field as the Calling Number.

† The default 15- and 18-word formats may or may not have the Authorization Code, Time-in-Queue, and FRL fields, depending on the length of the Account Code.

The PCC (Processor Communications Circuit)

The PCC is introduced in R2 V4 to support VFCDR.

PCC PORT

The CDR record generator passes call information over the PCC port to peripherals such as the 3B2 CDRU for local storage. The PCC port can be administered either to a customer host or to a 3B2 CDRU. This port sends five types of administrable records. Refer to ''**The CDR Record**'' section.

Similar information is sent to all three port types (SMDR, CMDR/NCOSS, and PCC). The only difference in port output is the number of words a port can handle and the order of the data items. Older adjuncts to the switch cannot receive the new enlarged CDR records provided. The switch is designed to support not only the new adjuncts, but the old adjuncts as well. Once the switch is administered with one of the CDR record formats, all the ports receive the same call detail records. How the ports handle the message length and order of the data is dependent on the port. For example, an SMDR port cannot translate a variable format record unless the first 15 data items of the variable format are in the same order and of the same length as the 15-word default format. If the switch is administered with the 24-word recommended standard format, then the only port capable of sending all this data in a valid format is the PCC port.

PCC CIRCUIT PACK

The PCC (Processor Communication Circuit) TN-474B is a circuit board that provides Z3A ADU (Asynchronous Data Unit) interface capability to the processor. The TN-474 can use the second, third, and/or fourth slots allocated to the TN-403 Dual Speed Channel interface for communication between the PCC and the external device (3B2 CDRU).

The PCC device-driver software provides the necessary interface between the switch applications software and the PCC circuitry. The applications software uses the circuitry to communicate with a CDR device (remote asynchronous processor). The PCC provides two independent communication channels per card for peripheral interfaces, each with its own processor. **Important Note: R2 V4 allows the administration of only one channel at a time, and only one channel per switch**.

Selecting the Most Advantageous Data Presentations:

The PCC circuit provides three CDR data presentations that have advantages depending on the application. Each of the following data presentations offer a different level of flexibility and data integrity.

- *BTC Protocol*. The BTC Protocol provides one of the higher levels of data integrity provided by the PCC interface. This is accomplished through error checking and handshaking with the peripheral. However, since the BTC protocol is not an industry standard, many peripherals do not understand the protocol and cannot respond accordingly.

- *18-Word Formatted Direct Output*. The 18-word formatted record is a standard 18-word BCD record converted to an 81-character ASCII string that is dumped serially to a peripheral that can recognize the length of the string. CAS, CSM, and custom developed equipment can recognize this data presentation. This presentation does not use integrity checking; therefore, if a message is received incorrectly, there is no method of retransmission. In other words, the peripheral cannot send any messages back to the PCC

notifying it of an error. The advantage of this data presentation is to send CDR records directly to devices which do not require a protocol.

- *Direct Output Unformatted* . This data presentation is a simple BCD or ASCII output with a carriage return and line feed as a separation between records. This output has a great deal of flexibility with CDR equipment, but doesn't provide data integrity. Most processing equipment that can handle ASCII code can receive this data for further processing and eventual output in any format desired. Peripheral devices can be connected to the PCC for CDR direct output — that is, ASCII CDR records can be sent directly to many ASCII devices.

Figure 126-5 shows an example of unformatted direct output ASCII data as it is sent from the Direct Output of the PCC on the switch. The top part of the figure shows the data as it would appear at a simple ASCII terminal. The bottom part of the figure shows the labeled data items. The spaces inserted between data items (if desired) is accomplished through administration. Notice that data items may or may not appear in the call record, depending on whether or not the data item is actually administered in the format. However, a data item's position in the call record is always reserved for the data item, whether or not it is present in each record.

```
0009      9    160255512125005
0014      9    180055512125007
00529376                5005
00101                   5006
0151  650627      165113665007
```

	A	B	C	D	E	F	G	H	I	J	K	L	M	N	O	P	Q	R	S	T	U	V	W	X	Y	Z	#	*
1st Record	0	0	0	9				9						1	6	0	2	5	5	5	1	2	1	2	5	0	0	5
2nd Record	0	0	1	4				9						1	8	0	0	5	5	5	1	2	1	2	5	0	0	7
3rd Record	0	0	5	2	9	3	7	6													5	0	0	5				
4th Record	0	0	1	0	1																5	0	0	6				
5th Record	0	1	5	1		6	5	0	6	2	7						1	6	5	1	1	3	6	6	5	0	0	7

RECORDED DATA ITEMS

A - **D** = Call Duration
E = Condition Code
F - **H** = Trunk Dial Access Code Dialed
I - **K** = Trunk Dial Access Code Used (If Different From Trunk Dial Access Code Dialed)
L - **X** = Dialed Number (Right Justified)
Y - ***** = Calling Number

Figure 126-5. Example Call Records From PCC Direct Output to an ASCII Terminal

VFCDR STORAGE UNIT

A 3B2 processor loaded with CDRU software is referred to as the 3B2 CDRU. Any of the following AT&T computers can be configured as a 3B2 CDRU:

- 3B2/300
- 3B2/310
- 3B2/400.

The 3B2 CDRU performs the functions of a 94A LSU with greater storage capacity and processing power. The 3B2 CDRU is connected to the switch via the PCC and can receive CDR records in BCD over an RS-232C link at various baud rates. The BTC protocol is used to provide error detection and record retransmission. The 3B2 CDRU can also send CDR records to direct output devices or remote polling devices (such as the 93B CMDR or NCOSS) via DDCMP protocol. The 3B2 CDRU stores the CDR records on disk and sends the records to a tape, a printer, or a host computer for costing if the CSM Cost Management application is in use.

A minimally configured 3B2 CDRU can receive up to 24,000 18-word CDR records per hour, and can store about 400,000 records. The CDR output ports can transmit from 300 to 19,200 bps. The 3B2 CDRU can be polled at a rate of 36,600 18-word records per hour at 9600 bps.

The 3B2 CDRU can operate with the expanded storage capabilities offered by the 3B2 Expansion Module [reference AT&T 3B2/XM Manual (305-538)] and the Remote Management Package that includes the AIC (Alarm Interface Circuit) for interface with remote alarm devices.

An optional UPS (Uninterruptible Power Supply) is available to help ensure that records are not lost in the event of power outages and surges. The AT&T 1KVA UPS power supply or equivalent is recommended.

The 3B2 CDRU can interface with the following (refer to Table 126-F for format and device compatibility):

- *CSM (Centralized System Management)*. The 3B2 CDRU supports CSM either in a local configuration (the 3B2 CDRU colocated with CSM) or in a remote configuration (CSM polls the 3B2 using 93B CMDR as a front end). Unlike the 3B2 CDRU, CSM cannot yet process the variable format.
- *93B CMDR poller*. The 93B CMDR unit in a remote location polls the 3B2 CDRU to obtain call records over the dial-up network at 1200 bps. The 93B CMDR does not support the variable format CDR records. The 93B expects to receive data items in 15- and 18-word recommended standard and standard default formats.
- *NCOSS (Network Control Operations Support System)*. The NCOSS system polls the 3B2 CDRU to obtain call records over the dial-up network at 1200 bps. NCOSS does not presently support the variable format CDR records, but soon should.
- *Customer-owned peripherals*. Host processors, tape drives, printers, and polling equipment can accept variable as well as default format records over an RS-232C link.

Additionally, the 3B2 CDRU can:

- Receive CDR data from different types of AT&T switches via the RS-232C interface (can receive data from only one switch at a time).
- Store the received CDR data.
- Allow for access by different CMDR devices.
- Upon request, dump the stored records to a polling computer.

The 3B2 CDRU is administered using a display terminal connected to an RS-232C port on the 3B2. This terminal may be local or remote via a dial-up link. The following items are administrable from the administration terminal:

- I/O (Input/Output) ports
- CDR masks and filters
- Time of day
- Access security
- CDR record storage parameters
- Status and alarm indication.

CDR Record Output From the 3B2 CDRU

The 3B2 CDRU supplies two outputs — Direct Output and Polled Output.

- Direct Output

  The direct output option is used to send data to local peripherals including CSM and customer-provided equipment. Data presentation from the 3B2 CDRU is similar to the direct output from the switch, with the exception that the direct output from the 3B2 CDRU may support XON/XOFF flow control. Direct output can be administered to provide data in the following two forms:

  — Unformatted

  This option can send any variable format and all of the other formats.

  — Formatted ASCII

  This option can send only 15- or 18-word records administered in the switch.

- Polled Output

  Polling devices such as the 93B CMDR and NCOSS expect a packed BCD coded record in the form of DDCMP (Digital Data Communications Message Protocol). The 24-word record format will have an identification header of D4. A 93B poller can poll two 3B2 CDRUs sending 15- or 18-word records. See the ‘‘VFCDR RETRIEVAL SYSTEMS’’ section for more information. Refer to the ‘‘CDR Reference Manual (555-006-202)’’ for details.

Figure 126-6 shows an example of unformatted direct output ASCII data as it is sent from a 3B2 CDRU. The top half of the figure shows the data as it would appear at a simple ASCII terminal. The bottom figure shows the labeled data item. The spaces inserted between the data items (if desired) is accomplished through administration. Notice that a particular data item may or may not appear in the call record, depending on whether the data item is actually administered in the format. However, a data item’s position in the call record (if administered as part of the record) is always reserved for the data item, whether or not it is present in each record.

```
1423      9    160255512125005
1423      9    180055512125007
16249376                5005
16271                   5006
1630  650627      165113665007
```

	A	B	C	D	E	F	G	H	I	J	K	L	M	N	O	P	Q	R	S	T	U	V	W	X	Y	Z	#	*
1st Record	1	4	2	3				9						1	6	0	2	5	5	5	1	2	1	2	5	0	0	5
2nd Record	1	4	2	3				9						1	8	0	0	5	5	5	1	2	1	2	5	0	0	7
3rd Record	1	6	2	4	9	3	7	6													5	0	0	5				
4th Record	1	6	2	7	1																5	0	0	6				
5th Record	1	6	3	0		6	5	0	6	2	7						1	6	5	1	1	3	6	6	5	0	0	7

RECORDED DATA ITEMS

A - D = 3B2 CDRU Time Stamp
E = Condition Code
F - H = Trunk Dial Access Code Dialed
I - K = Trunk Dial Access Code Used (If Different From Trunk Dial Access Code Dialed)
L - X = Dialed Number (Right Justified)
Y - * = Calling Number

Figure 126-6. Example Call Records From 3B2 CDRU Direct Output to an ASCII Terminal

VFCDR RETRIEVAL SYSTEMS

In networking, customized formats created through VFCDR require polling devices sophisticated enough to recognize the format being sent across the network by the 3B2 CDRUs. The polling device must have the capability to recognize the record's code and protocol. This is necessary for record sanity.

One or more 3B2 CDRUs in each remote location can be polled by a centralized device called the 93B CMDR (Centralized Message Detail Recorder). The 93B CMDR can be interfaced with two 3B2 CDRUs to provide polled call detail information at a centralized location. The 3B2 CDRUs must be administered with either a 15- or 18-word default format in order to send records to the 93B CMDR. The 93B CMDR can also be connected to a 94A LSUs through 212A or equivalent data sets over the DDD network. This scheme only works with CMDR port output only. Refer to the CMDR feature for details.

VFCDR PROCESSORS

Certain processing systems, retrieval, and storage devices can only handle some of the possible CDR formats provided by the switch. Refer to Table 126-F for possible combinations. See the ''VFCDR STORAGE UNIT'' section.

Table 126-6. Possible Record Formats for CDR Devices

	CDR Device						
Format	**CSM**	**93B**	**NCOSS**	**TELESEER SMDR**	**CAS**	**3B2**	**94A LSU**
15-word default	**X**	**X**	**X**	**X**	**X**	**X**	**X**
18-word default	**X**	**X**	**X**	**X**	**X**	**X**	**X**
18-word expanded	**X**	**X**	**X**	**X**	**X**	**X**	
18-word ISDN	**X**	**X**	**X**			**X**	
24-word	**X**		**X**			**X**	
Variable Format						**X**	

Note: An ''X'' in a box means the **CDR Devices** and the **Format** are compatible.

VISUALLY IMPAIRED ATTENDANT SERVICE

DESCRIPTION

The Visually Impaired Attendant Service feature provides additional devices to enable visually impaired attendants to operate the attendant console. These devices include:

- A grooved faceplate guide
- A light-sensitive pen
- A tone generator.

Refer to Figures 127-1 and 127-2 for drawings of these devices.

The attendant receives an audible tone through the headset, whenever the light pen is held over a lighted or flashing console lamp.

The tone generator provides additional distinctive audible signals, based on the ICI (Incoming Call Identification) translations, to identify the type of incoming call. Table 127-A describes the six different audible signals associated with the ICI display. See the Attendant Display feature for more information on ICI.

Table 127-1. Distinctive Audible Signals

ALERTING RATE	ALERTING SIGNAL	SIGNAL MEANING
Rate 1	Two burst, 0.15 seconds each	Incoming LDN Call
Rate 2	Repeated short bursts, 50 milliseconds each	Dial ‘‘0’’ Call
Rate 3	Two short bursts, repeated after 0.2 seconds	Attendant Recall
Rate 4	Three short bursts, repeated after 0.1 seconds	ICI Option
Rate 5	Short burst followed by long burst (0.25 seconds)	ICI Option
Rate 6	Short burst, long burst, short burst	ICI Option

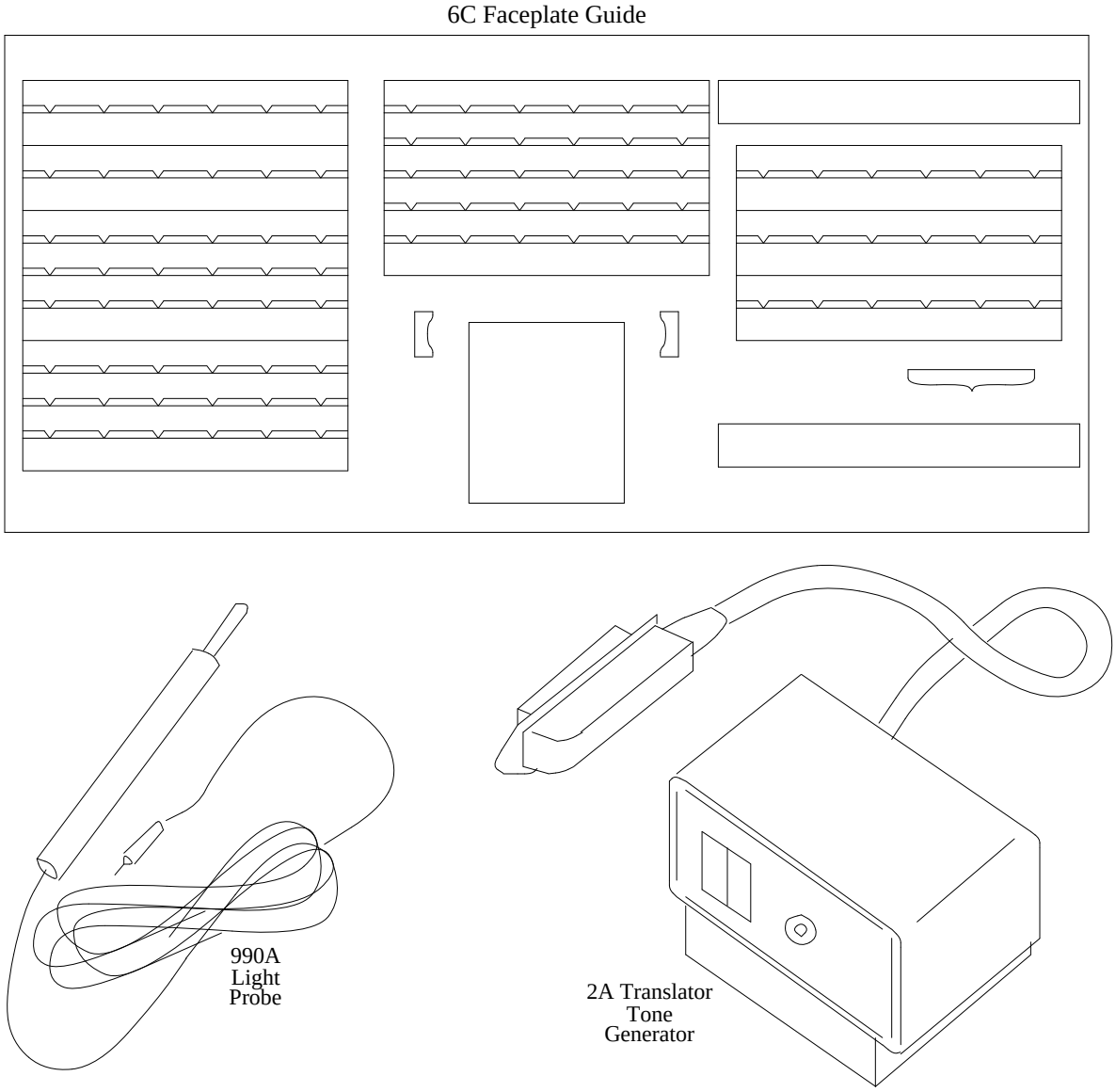

Figure 127-1. Visually Impaired Attendant Console Devices

Feature History and Development

This feature was first available on System 85 in Release 1. There have been no changes to this feature since Release 1.

USER OPERATIONS

The following are the user operating procedures for this feature.

To Extend an Incoming LDN (Listed Directory Number) Call:

- Distinctive audible tone identifies the incoming call.
- Press the ANSWER key. [Ringing stops.]
- After obtaining the desired extension, press the START key. [Calling party is split from the console, distinctive signal stops, dial tone.]
- Dial the desired extension number or trunk access code, or
- Use DXS (Direct Extension Selection) or Direct Trunk Group Selection if available.
  [Call-progress tone]
- Depending on calling instructions:
  a. Press RELEASE to disconnect from the call, or
  b. Press HOLD to hold the call on the console. [Call-progress tone is silenced.]

To Answer a Timed Reminder Call:

- Timed Reminder is identified by the distinctive audible signal.
- Pass the light pen slowly over the face plate groove for the HOLD, BUSY, or RING lamps to find the active loop lamp. [On-off tone is heard when the light pen is over the flashing indicator lamp.]
- Press the associated loop key. [Timed Reminder tone stops.]

CONSIDERATIONS

Attendant Display (ICI)

While the Attendant Display—Incoming Call Identification feature provides up to 30 separate messages, the distinctive ringing available to the Visually Impaired Attendant feature is limited to the first five of these. Three of these are fixed by the system, and two can be selected by the customer. All other signals default to the sixth, common ringing mode. Care must be taken in administering the Attendant Display feature to provide maximum effectiveness to the distinctive ringing signals and avoid confusion.

Light Pen Sensitivity

The light pen may not detect a flashing indicator lamp if the pen is moved too quickly across the faceplate of the console. Therefore, the attendant should move the pen at a relatively slow rate.

INTERACTIONS WITH OTHER FEATURES

The following System 85 features affect or are affected by the operation of this feature.

Malicious Call Trace

A visually impaired attendant should not attempt to trace a malicious call. The controlling attendant must be able to see and record the ICI messages. Also, the controlling attendant must be able to read and communicate the information from the cross-reference of trunks.

RESTRICTING FEATURE USE

The CODE RING ON-OFF switch enables or disables coded ringing.

The AUD OFF button disables both the Timed Reminder tone and the calls waiting tone.

HARDWARE REQUIREMENTS

The Visually Impaired Attendant Service feature requires the following additional or special hardware.

- A 990A light sensor
- A 2A translator
- A 6C grooved faceplate guide.

FEATURE ADMINISTRATION

The Visually Impaired Attendant Service feature is hardware activate. No separate assignment or administration is required.

WIDE AREA TELECOMMUNICATIONS SERVICE ACCESS

DESCRIPTION

The WATS (Wide Area Telecommunications Service) Access feature provides users with rapid, straightforward access into the WATS network. Outgoing call service to a predetermined geographical area or areas is provided on a reduced cost basis compared to corresponding toll service. A similar but separate service is provided for incoming calls by 800 Service Access. This feature (800 Service) has also been known as INWATS. Incoming 800 Service calls can be provided LDN Service (directed to an attendant), be directed to an ACD, UCD, or EUCD split, go directly to a specific System 85 extension, or be provided use of the Remote Access feature.

Calls using WATS Access can be originated by System 85 terminal users or Remote Access users provided restrictions are not applied, or they can be set up using attendant assistance.

Feature History and Development

This feature was first available in System 85 with Release 1 as part of Public Network Access. It was reintroduced as WATS Access in Release 2, Version 3. Otherwise, this feature has remained unchanged since its introduction.

USER OPERATIONS

The following are the user operating procedures for this feature.

DOD Calls From a System 85 Terminal:

- Go off-hook. [Dial tone]
- Dial the WATS Access code. [Second dial tone]
- Dial the final destination number.

Attendant Handled Calls

If ADTGS (Attendant Direct Trunk Group Selection) is available:

- Press the appropriate WATS trunk group button.

If ADTGS is not available:

- Press the START button. [Dial tone]
- Dial the WATS trunk group access code.

Depending on calling instructions:

- Press the HOLD button to remain connected to the call and finish dialing the final destination number (or set up a conference call if desired).
- Press the RELEASE button to drop from the call and allow the calling party to finish dialing.

CONSIDERATIONS

AAR (Automatic Alternate Routing)/ARS (Alternate Route Selection) Option

The WATS Access feature can be set up to work in several different ways. These include direct dialing to the WATS trunk group, Attendant Control of Trunk Group Access, or access as part of an AAR or ARS routing pattern. The **User Operating Procedures** are generally applicable. However, if access to WATS trunk groups is provided through AAR/ARS routing patterns, the AAR or ARS access code is dialed, and the user may not be aware of whether a WATS trunk is being accessed or some other facility (i.e., Private Network, FX Access, or Toll facility).

Hard and Soft Processor Swaps

Stable calls over WATS trunk groups endure a hard processor swap. However, calls cannot be placed over WATS trunk groups during a hard processor swap.

INTERACTIONS WITH OTHER FEATURES

The following System 85 features affect or are affected by the WATS Access feature.

DID (Direct Inward Dialing)

Using incoming (or 2-way) WATS trunks, the DID feature can be used by a caller in the 800 Service area to reach a specific station on the System 85 switch.

DOD (Direct Outward Dialing)

Using outgoing (or 2-way) WATS trunks, the DOD feature is used by System 85 users to call stations in the WATS Access service area over WATS Access trunks.

Multiple LDN (Listed Directory Number)

The Multiple LDN feature can be used to direct incoming 800 Service Access calls to the attendant queue.

Remote Access

The Remote Access feature can be used to provide access to the WATS feature, and Remote Access services can be provided to incoming calls on 800 Service trunks.

RESTRICTING FEATURE USE

The Restrictions—Attendant Control of Trunk Group Access feature allows the attendant to restrict DOD (Direct Outward Dialing) by terminal users to WATS Access trunk groups.

The Attendant Control of Voice Terminals, the Voice Terminals Restrictions, and the Miscellaneous Trunk Restrictions features can limit access to WATS by specific terminals or terminal with a specific class of service.

If WATS Access is obtained via the AAR or ARS features, the FRL (Facilities Restriction Level) and Authorization Codes feature can also be used to restrict the accessibility of WATS Access trunks.

HARDWARE REQUIREMENTS

The following specific hardware is required to support the WATS Access feature.

- SN230 trunk circuit pack (four circuits per circuit pack).

FEATURE ADMINISTRATION

Assignment of the WATS Access feature is on a per-system and per-trunk group basis. The customer can partially administer this feature using the SMT (System Management Terminal) and the TCM (Terminal Change Management) feature. This feature can also be administered using CSM (Centralized System Management).

The following are the applicable MAAP and SMT procedures.

MAAP AND SMT PROCEDURES — WATS ACCESS			
PROCEDURE	**WORD**	**PURPOSE**	**SMT**
010	3	Assigns miscellaneous trunk restriction group and FRL to a line class of service.	Yes
100	1	Assigns trunk group dial access code, route advance sequence, and trunk type.	No
101	1	Assigns trunk group features.	No
102	—	Assigns Miscellaneous Trunk Restrictions (if desired).	Yes
103	—	Assigns network features associated with a trunk group including FRL.	Yes*
115	—	Assigns incoming termination to a trunk group (800 Service).	No
150	—	Administers trunk-group number and unattended console service to the equipment location.	No
202	—	Assigns trunk group to Attendant Trunk Group Select buttons and trunk-group warning levels.	No
204	—	Administers the ICI (Incoming Call Identification) for the Attendant Console (for 800 Service calls).	No
* Display only.			

The following is the applicable TCM path name used with the AP 16.

TCM SCREEN — WATS ACCESS	
PATH NAME	**PURPOSE**
terminal-change class-of-service	Assigns miscellaneous trunk restrictions and FRL to a line class of service.

The following are the applicable CSM Command Paths utilizing the **admin** area of TCM or FM.

CSM SCREENS — MASKS WIDE AREA TELECOMMUNICATIONS SERVICE ACCESS		
APPL'N	**OBJECT**	**PURPOSE**
TCM	class-of-service	Assigns miscellaneous trunk restriction group and FRL to a line class of service.
FM	trk-grp	This command provides administration (add, change, remove, or display) for the following: Trunk-group dial access code, route advance sequence, trunk type, trunk-group features, network features associated with a trunk group including FRL, and associates a trunk-group number and unattended console service to an equipment location.
FM	misc-trk-rst-grp	Administers Miscellaneous Trunk Group restrictions (if required).
FM	term-trk-grps	Adds, changes, displays, or removes incoming termination to a trunk group (800 Service).
TCM	direct-trk-grp-keys	Assigns trunk group to Attendant Trunk Group Select buttons, and assigns trunk group warning levels.
TCM	console-messages	Administers the ICI for the Attendant Console (for 800 Service calls).

A. APPENDIX A: CONFIGURATION LIMITS

SYSTEM 85, Release 2

Configuration Limits by Version

The following tables provide a quick reference to the limits of System 85 configurations by Version for Release 2. These limits are based on allocated or available memory table space. Each application has a maximum limit, and the system has a limit that further constrains the sum of all applications.

Maximum Line Records:	32,703 (in Release 2, Version 3)
Sum of Line Applications:	62,000
Difference:	29,297 (More Applications than Line Records).

That is, while a specific application may have a limit of its own, say 10,000 Multiappearance Station Sets, the system may not permit that limit to be reached. This is because the sum of related applications (Line Limits) must be less than the total of their combined maximums (in the described case, 29,297 fewer total applications).

LINE LIMITS (NOTE)				
APPLICATION	**Version 1**	**Version 2**	**Version 3**	**Version 4**
Analog Station Sets (2500, 7100 Series)	7,000	8,000	32,000	32,000
Multiappearance Station Sets (7200H Series, 7300H Series, 7400D Series)	5,000	5,000	10,000	10,000
Voice Data Stations (7404D or 7400D Series with DTDM)	2,500	4,020	8,000	8,000
Display Stations (7404D with Messaging Cartridge, 7405D with Display Module, 7407D, 515 BCT, 510D)	900	2,000	5,000	10,000
Line Side Data Modules (DTDM, PDM, TDM, MDM, EIA Ports, etc.) Plus Total Multiappearance Sets	5,000	8,040	16,000	16,000
Line Records	15,000	19,145	32,703	32,703
Dedicated Switch Connections (voice and data)	—	—	1023	1023

NOTE: The Line Records limit is the upper limit of all combinations of the other line applications. The sum of other limits exceeds this figure but the total administered in an installation cannot.

STATION FEATURE LIMITS				
APPLICATION	**Version 1**	**Version 2**	**Version 3**	**Version 4**
Abbreviated Dialing:				
-Characters Per Button	20	20	20	20
-Characters Per Call	36	36	36	36
-Maximum in System List	99	99	9,999	9,999
-Maximum in a Nonsystem List	30	30	95	95
-Number of Nonsystem Lists	2,047	5,118	13,107	52,223
-Number of Group Lists	500	1,000	9,999	9,999
-Maximum in All Lists	24,000	65,535	65,535	262,143
Mnemonic (Keyboard) Dialing:				
-List Entries	—	—	300	1000
-Mnemonic Characters	—	—	10	10
-Characters in Number	—	—	20	20
Default (Terminal) Dialing:				
-Characters in Number	—	—	20	20
Button Table Words*	64,000	220,000	400,000	400,000
Call Pickup Groups	999	999	999	999
Coverage Groups	3,000	4,096	4,096	4,096
Display—Voice Terminal:				
-Display Names	5,000	8,500	32,767	32,767
-Average Characters Per Name	22	22	22	22
-Maximum Characters Per Name	30	30	30	30
Intercom Records:				
-Auto/Manual	300	300	300	300
-Dial	280	280	280	280
Line Appearances:				
-Per Station Set	12	12	12	12
-Images Per Line Appearance	16	16	16	16
-Images Per Extension	192	192	192	192
Leave Word Calling Messages on the Switch	3,000	6,000	6,000	6,000
Line Classes-of-Service	63	63	63	63
Message Waiting Lamps (Auto)	7500	10,500	32,000	32,000

* See the next table for Button Table Word requirements.

BUTTON TABLE WORD REQUIREMENTS	
APPLICATION	**REQUIREMENT**
2500 and 7101A Station Sets	None
7103A Station Sets	None
7203H, 7303S, 7401D, and 7403D Station Sets	12 Words Each Unit
7205H, 7305S, and 7405D Station Sets	36 Words Each Unit
☞7404D Station Sets	8 Words Each Unit☜
7406D and 7406D With Display Station Sets	32 Words Each Unit
510D Terminal	22 Words Each Unit
515 BCT	23 Words Each Unit
C201A and C401A Call Coverage Modules	20 Words Each Unit
Display Modules	8 Words Each Unit
Data Modules (PDM, TDM, DTDM, MDM, VDT, EIA Port)	3 Words Each Unit
One Button Transfer	1 Word Each Unit
F201A and F401A Function Key Modules	24 Words Each Unit
Manual Message Waiting Button	1 Word Each Unit
Stations Signaled by Station Busy	2 Words Each Unit
Stations Signaled by Manual Signaling	1 Word Each Unit

SYSTEM PARAMETERS LIMITS				
APPLICATION	**Version 1**	**Version 2**	**Version 3**	**Version 4**
ACD (EUCD):				
-Agents	—	512	1024	1024
-Service Observers (Active)	—	—	64	64
-Splits	—	30	30	60
-Recorded Announcements	—	30	30	60
☞Answer-Back Channels:				
-Call Park and Loudspeaker Paging*	9	9	9	9
-Code Calling Access	6	6	6	6☜
Attendant Features:				
-Conference Bridges	13	13	13	13
-Console Positions	28	40	40	40
-Consoles (100s Groups)	100	100	100	100
-Originating Registers (ORs)	28	40	40	40
-Switched Loops	168	240	240	240
-Voice Terminal Restriction Groups	63	63	63	63
Call Forwarding—Follow Me:				
-Off-Net Forwarding Relationships	3200	3200	3200	3200
Call Vectoring:				
-Number of Vectors	—	—	—	128
-Steps per Vector	—	—	—	15
Calling Number Display Units	20	20	20	20
DCIUs:				
-DCIU Links	8	8	8	8
-APs per DCIU	7	7	7	7
-AUDIX Adjuncts per DCIU	—	4	4	8
-DCS Links per DCIU	8	8	8	8
-Logical Channels per Link	64	64	64	64
Maximum Digits in Dial Access Code	3	3	3	4
Dial Access Codes (Feature and Trunk)	175	500	500	500
Dial Pulse and Touch-Tone ORs	246	246	246	246
Total ORs	300	300	300	300

* The Call Park and Loudspeaker Paging Access features share the same nine answer-back channels.

SYSTEM PARAMETERS LIMITS (Contd)				
APPLICATION	**Version 1**	**Version 2**	**Version 3**	**Version 4**
DS1:				
-DS1 Circuit Packs Per Switch	255	255	511	511
-Port Carriers Per Module	11	12	12	12
-Interfaces Per Port Carrier	2	2	2	2
-MFAT Port Circuits Per DS1 Port Carrier	—	16	16	16
FADS:				
-CAS Display Units	1	1	1	1
-UCD Display units	12	N/A	N/A	N/A
Listed Directory Numbers (DID)	4	4	9	999
Loudspeaker Paging Zones	18	18	18	18
Network Modules	18	31	31	31
Network Cabinets Per Module	4	4	4	4
Port Carriers Per Module	12	12	12	12
☞PCC (Processor Communications Circuit) Circuit Packs	—	—	—	3*☜
Port Circuit Packs Per Port Carrier	16	16	16	16
Recorded Announcements (Non ACD/EUCD)	2	16	16	16
System Status Indicator Lamps	128	168	168	168
Tenant Services:				
-Extension Partitions	—	—	—	1000
-Extension Partition Groups	—	—	—	500
-Attendant Partitions	—	—	—	41

* Only *one* of the provided PCC ports can be used at any one time. This port can only be used as a CDR port.

TRUNK LIMITS (Per Switch)				
APPLICATION	**Version 1**	**Version 2**	**Version 3**	**Version 4**
ACD/DDC/UCD/EUCD:				
-Groups/Splits	28	30	30	60
-Members Per Group	40	512	1024	1024
-Assignable Agents	1120	512	1024	1024
ANI Boards	2	2	2	2
Contact Interface Boards	34	34	34	34
Preselected Call Routing Groups	255	255	255	982
Preselected Call Routing Trunks Per Trunk Group	99	99	99	99
Personal Central Office Lines (Trunks)	150	150	150	150
AIOD Queues	6	6	6	6
Trunks, Physical (Including Host Access and Modem Pooling)	2250	5000	6000	6000
Trunk Records, Assignable (Outgoing Trunk Queues, Physical Trunks, and Trunk Intercom Records)	2705	7525	8525	8525
Trunk Records (Total)	3250	7970	8970	8970
Trunk Groups:				
-Modem Pooling Trunk Groups	175	238	238	982
-Host Computer Access Trunk Groups	175	238	238	982
-Total (Including Host Access and Modem Pooling)	255	255	255	999*
-Trunks Per Trunk Group (Modem Pooling)	99	99	99	99
-Trunks Per Trunk Group (Host Computer Access)	99	99	99	99
-Trunks Per Trunk Group (Others)	99	255	255	255
RLTs (Release Link Trunks):				
-Inward	110	110	110	110
-Outward	16	16	16	16
-Groups at Main (CAS Branch)	40	40	40	40
Remote Access Trunks	45	45	45	6000
Restriction Levels (Code Restriction)	4	4	4	4
Route Advance, Trunk Groups Per Pattern	5	5	5	5

* The first 17 trunk groups are dedicated to internal service facilities. The amount of trunk groups available for customer use is 982.

NETWORK PARAMETER LIMITS				
APPLICATION	**Version 1**	**Version 2**	**Version 3**	**Version 4**
AAR:				
-Patterns	255	255	640	640
-Trunk Groups Per Pattern	4	4	16	16
-Conditional Routing Call Categories	—	—	3	3
ARS:				
-Patterns	64	64	64	64
-Trunk Groups Per Pattern	16	16	16	16
-Call Categories for Tenant Services	—	—	—	64
-Foreign NPAs (6-Digit Translation)	64	64	160	160
-Patterns Per 6-Digit Translation	4	4	10	10
Authorization Codes	9,000	9,000	90,000	90,000
DCS Nodes	12	20	20	63
DCS Nodes with Attendant Centralized at One Node	12	20	20	40
DCS Nodes per AUTOVON Interface	12	20	20	40
Facilities Restriction Levels	8	8	8	8

B. APPENDIX B: RELEASE 2 CALL DISTRIBUTORS

Comparison of Call-Distribution Features

The following table provides a quick comparison of the functions provided by the various call-distribution features during Release 2.

FUNCTION	DDC R2 V1	UCD R2 V1	EUCD R2 V2	ACD R2 V3	ACD R2 V4
Maximum Number of Splits (Groups) in Switch	28 (shared)	28 (shared)	30	30	60
Maximum Number of Agents (Members) in Switch	1120 (shared)	1120 (shared)	512	1024	1024
Maximum Number of Agents in Single Split	40	40	512	1024	1024
Incoming Call Queue for Each Split	Yes	Yes	Yes	Yes	Yes
Priority Portion of Incoming Call Queue	No	No	Yes	Yes	Yes
Direct Hunting	Yes	No	Yes	Yes	Yes
Circular Hunting	No	Yes	Yes	Yes	Yes
Most Idle Agent Distribution	No	No	No	Yes	Yes
Time Interval Between Scans for an Available Agent (in seconds)	2.0	2.0	0.2	0.2	0.2
Agent Override	No	No	Yes	Yes	Yes
Service Observing	No	No	No	Yes	Yes
30A8 Queue Warning Lamps	Yes	Yes	Yes	Yes	Yes
106B Agent Status Lamps	No	No	Yes	Yes	Yes
FADS Measurement of Agent Activity	No	Yes	No	No	No
CMS Measurements on AP 16 or 3B2/5	No	No	No	AP, 3B	3B
Multiple Agent Work States	No*	No*	Yes	Yes	Yes
Automatic Answering and Zip Tone	No	No	Yes	Yes	Yes
Unique Announcement From Each Split to Calling Party	No	No	Yes	Yes	Yes
System-Wide Recorded Announcement to Calling Party	Yes†	Yes†	Yes	Yes	Yes

* Group busy and member busy are available using an access code.
† This announcement can be periodically repeated.

FUNCTION	DDC R2 V1	UCD R2 V1	EUCD R2 V2	ACD R2 V3	ACD R2 V4
Internal Callers Receive Anncts.	No	No	Yes	Yes	Yes
Music After Announcement(s)	No	No	Yes	Yes	Yes
Multiple Music Sources	No	No	No	No	Yes
Intraflow	No	No	Yes	Yes	Yes
Interflow	No	No	Yes	Yes	Yes
Queue-of-Origin Announcements	No	No	Yes	Yes	Yes
City-of-Origin Announcements	No	No	Yes	Yes	Yes
Queue-of-Origin Displays	No	No	Yes	Yes	Yes
City-of-Origin Displays	No	No	Yes	Yes	Yes
DNIS (Dialed Number Identification)	No	No	Yes	Yes	Yes
Abandon Call Search	Yes	Yes	Yes	Yes	Yes
Queue-Status Display	No	No	No	No	Yes
Multiple Call Handling	No	No	No	No	Yes
Malicious Call Trace	No	No	No	No	Yes
Call Vectoring	No	No	No	No	Yes

C. APPENDIX C: ADMINISTRATION FACILITIES

System 85 call-processing software uses a variety of tables located in system memory to keep track of:

- Port circuit addresses
- Trunk circuit addresses
- Extension numbers
- Feature assignments
- Voice terminal button assignments
- Network configuration
- System configuration
- System-wide options.

Collectively, these tables are called *translations*. System 85 is shipped with a tape which includes generic software and translations. When the system is installed, the tape is used to load the main memory. The information used to create these translations comes from the order form received by the factory. A printed record of these translations is provided by the Customer System Document (shipped with each System 85).

Since translations are stored in memory, information such as the number of modules the system has, the equipment location of a data module, or the features a voice terminal may access can easily be changed. The process of changing translations is called administration. System 85 uses a series of programs called ‘‘procedures’’ (PROCs) to change translations. A person wanting to administer the system (change translations) can access the procedure programs by using one of the following System Management vehicles:

- CSM (Centralized System Management)—A forms-based CRT screen user interface. CSM maintains data bases which contain copies of translations for one or more System 85 switches. This allows an administrator to change translations off-line from the switch. CSM is then programmed to contact the System 85 at a later time; when contact is made, CSM tells the switch to execute the procedures needed to make the corresponding changes to switch translations.
- MAAP (Maintenance and Administration Panel)—A numeric key pad, a 25-digit display, and a set of flipcharts are used to access PROCs (procedures). (Flipcharts are cards attached to the MAAP that allow the user to interpret the data appearing on the 25-digit display.) PROCs are used to change translations. The MAAP also uses another category of PROCs to perform maintenance tests.
- VMAAP (Visual Maintenance and Administration Panel)—A program that in a UNIX System environment which provides a CRT screen interface that emulates the 25-digit display of the MAAP. In order to interpret the numbers appearing on the screen, a user must have a copy of the flipcharts for the software version being run on the switch. Terminals access this software through an RS-232 link which connects to the System 85 remote port interface circuit.
- SMT (System Management Terminal)—A unit almost identical to the MAAP which offers access to a subset of the PROCs available through the MAAP.

☞ (*The following list item does not apply to R2 V4*)

- FM (Facilities Management)—A feature on the AP 16, available to the switch administrator via a BCT. This feature is used for network administration. ☜

☞ (*The following list item does not apply to R2 V4*)

- TCM (Terminal Change Management)—A feature on the AP 16, available to the switch administrator via a BCT. This feature is used for feature assignment and terminal rearrangement. ☜

☞ (*The following list item does not apply to R2 V4*)

- RMATS-II (Remote Maintenance, Administration, and Traffic System II)—A service available from an AT&T service center. This service has the same administrative capabilities as the MAAP. It can also be used to run maintenance routines. ☜

All of these system management vehicles work with older versions of System 85. But, the AP 16 system management features and RMATS-II, which were available as system management vehicles for older versions, are not supported in R2 V4.

CSM, VMAAP, AP 16 TCM and FM, and RMATS-II all use the TN492 remote port interface circuit to access the switch. Before R2 V3, only one of these tools could use the remote port at any given time. For R2 V3 and beyond, two simultaneous connections are allowed if one is accessing maintenance procedures and the other is accessing administrative procedures. Two simultaneous administrative sessions or two simultaneous maintenance sessions are not allowed.

D. APPENDIX D: DATA COMMUNICATIONS

Several different forms of digital communications services are provided by the System 85 features. The System 85 is a digital switch. As such, it is particularly well suited to provide a variety of digital services. Tables D-A and D-B summarize the data communications features available with System 85, and the services these features provide.

DIGITAL FEATURES AND SERVICES

Table D-1. Summary of Internal Digital Features and Services

FEATURE	DIGITAL FORMAT USED	SERVICE PROVIDED
Data Call Setup	DCP (Digital Communications Protocol)	Data and digital voice calling and signaling within the local switching network.
Data Protection	Not Applicable	Protection from intrusion warning tone for internal data calls.
Data Communications Access	Analog	Analog line or trunk interface for local host computers.
Host Computer Access	DCP	Digital line or trunk interface for local host computers.
PC/PBX Connection	DCP	Switch feature and service access for local Personal Computers.
Modem Pooling	Analog/DCP	Inserts conversion resources for calls transiting between analog and digital formats.

Table D-2. Summary of Digital Interface Features

Feature	Digital Format Used	Service Provided
ACCUNET Service Interface	BOS	Trunking: CO or Special Access
DMI (Digital Multiplexed Interface):	24th Channel Signaling	Host Computer Services:
	BOS	Provides 23, 64 Kbps clear data channels over standard DS1 (AVD) trunking facilities.
	MOS	Provides 23, 64 Kbps clear data channels over ISDN trunking facilities.
DS1 Interface:		
Voice Grade Service	In Channel (Bit Robbed)	Trunking for CO, FX, ETN connections Supports digitized voice communications and data communications with modems. Data rates are limited to 19.2 Kbps.
AVD (Alternate Voice Data)	24th Channel Signaling	Trunking: CO, FX, ETN Supports digitized voice and data communications without modems up to 64 Kbps clear channel.
ISDN/PRI (Integrated Services Digital Network /Primary Rate Interface)	24th Channel MOS Signaling	Voice and Data Services
ISN (Information System Network) Interface	DCP/EIA	Data Communications Interface Services (between System 85 and ISN Local Area Network.

BOS (Bit Oriented Signaling)
MOS (Message Oriented Signaling)

BASIC DIGITAL SIGNALS

Unipolar Signals

Basic digital signals are carried over low voltage dc (direct current) circuits. This is the type of signaling used at the I/O (Input/Output) ports of most data terminal devices. The most common form these signals take is unipolar. With this form of signaling, zero voltage is used as the reference level and a pulse deviation (plus or minus the carrier voltage) is used to indicate a bit change. Figure D-1 represents a unipolar bit train.

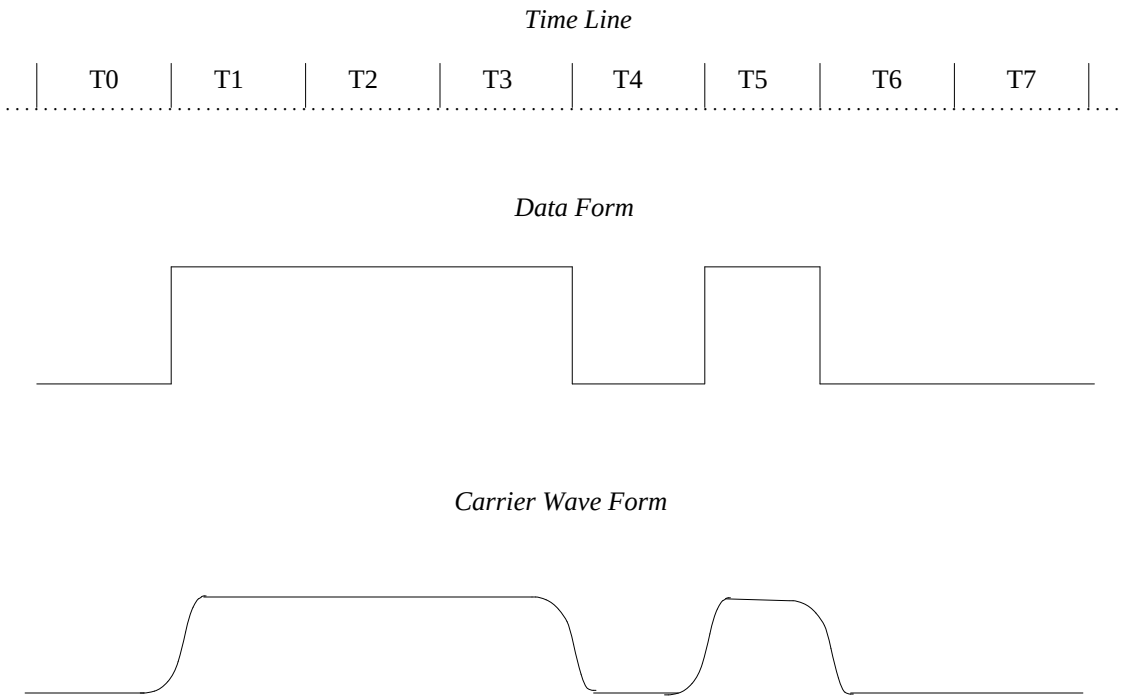

Figure D-1. Unipolar Digital Format

The pulse may represent either a bit (binary 1) or a no bit (binary 0).

This is a satisfactory arrangement for short range transmissions. However, when greater ranges are needed, problems arise. Voltages are typically in the range of 5 to 12 volts dc. Greater effective ranges can be achieved by raising the voltage levels. However, this increases the rise time for each pulse and has a detrimental effect on transmission rates. Regenerative repeaters can also be used; however, this increases costs and also limits available transmission rates. A cost effective way to overcome these problems is to convert the signals to an ac (alternating current) carrier.

Bipolar Signals

The use of bipolar signaling offers an attractive alternative to unipolar signaling.

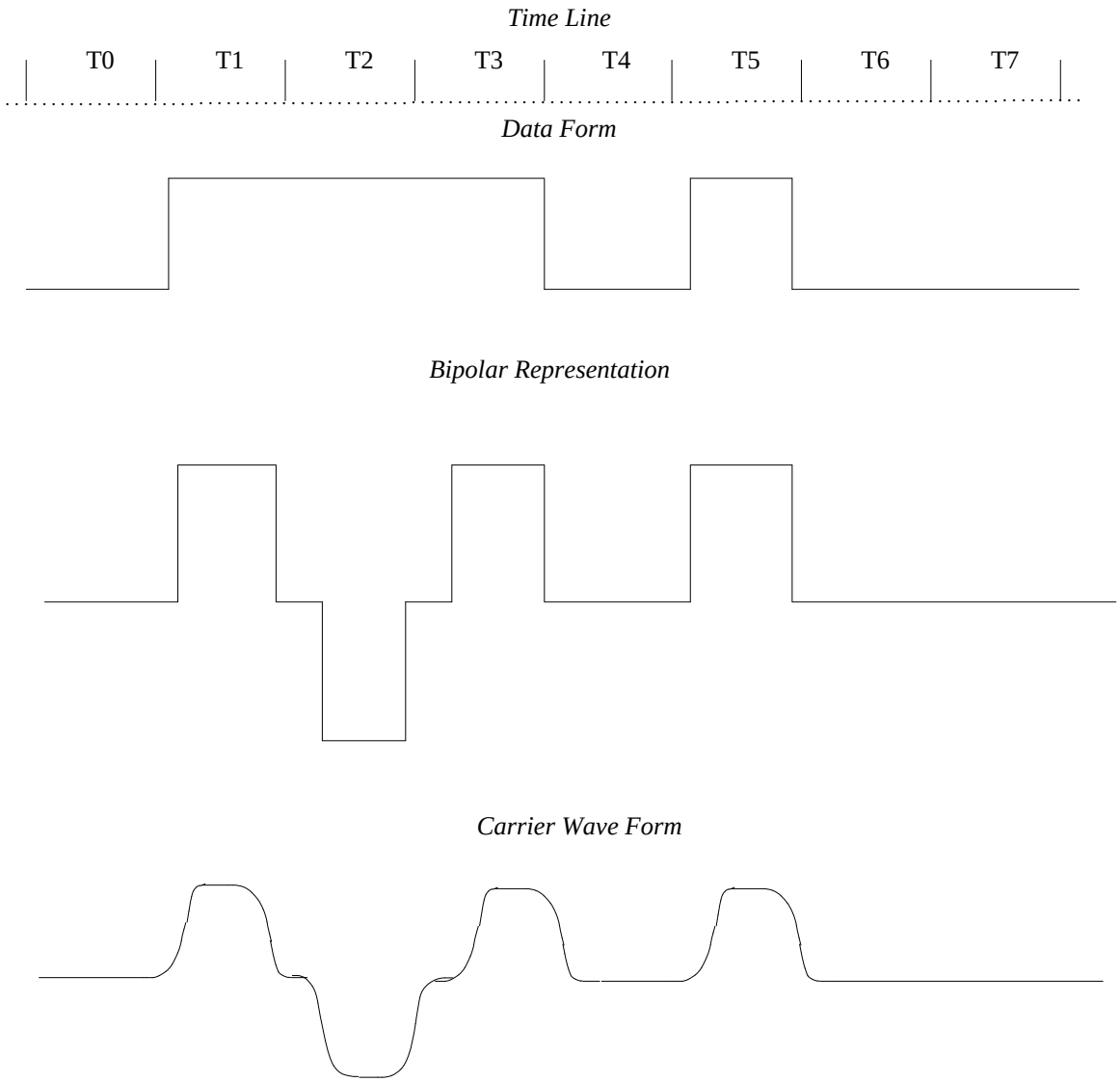

Figure D-2. Bipolar Digital Format

DATA COMMUNICATIONS APPLICATIONS

Some features, such as ISN Interface, are directed toward specific data applications. Others are more general and provided opportunities for individualized applications. The following is an application that is derived from the more general feature, Data Call Setup.

HOST COMPUTER DIALING

The DCP (Digital Communications Protocol) and the ‘‘*Keyboard Dialing*’’ function of the Data Call Setup feature provide a simple and flexible call interface that can be used by program controlled computers as well as by human controlled terminals.

To take advantage of the terminal dialing capability available to a program controlled computer on the System 85 switch, the programmer needs detailed knowledge of dialing formats, call progress messages, and control-lead state changes during the course of a call. The following provides the information needed to prepare a Host Computer Dialing program.

Data Modules

Several types of data modules are available for use with customer provided equipment. They all support keyboard dialing. However, three data modules are specifically applicable to the Host Computer Dialing application:

MPDM (Modular Processor Data Module)

The MPDM is a stand-alone DCE (Data Communications Equipment) device. This data module supports synchronous or asynchronous operation from 300 bps to 19.2 Kbps and synchronous operation at 56 Kbps and 64 Kbps. It also provides a ‘‘LOW’’ mode that operates by blind sampling at 19.2 K samples per second. Keyboard dialing is **not supported** at ‘‘LOW,’’ 56 Kbps, or 64 Kbps. The MPDM can be configured with an RS–366 autodialer interface.

MTDM (Modular Trunk Data Module)

The MTDM is a stand-alone device that provides a DTE (Data Terminal Equipment) interface. It supports the same speeds and modes of operation as the MPDM. The MTDM also supports a ‘‘switched’’ mode that is used with the System 85 Modem Pooling feature.

EIA Port Board and MADU (Multiple Asynchronous Data Unit)

The SN238, EIA Port Board, and MADU configuration forms a reduced cost device that provides a simplified DCE type interface. This is not a data module as such, but serves the same purpose. One RS–232C control lead is supported in each direction. Receive Line Signal Detect and Clear to Send are tied to Data Set Ready, and Data Terminal Ready is inferred as Request to Send. The EIA Port Board MADU configuration supports asynchronous-only operation from 300 bps to 19.2 Kbps. An optional speed-selection algorithm (autobaud) is also available.

For use with the Host Computer Access feature, the Z3A3, ADU can be used rather than the MADU. In effect, the MADU is eight ADUs combined in a common housing. The functionality is the same, but the MADU wiring and installation is more compact.

Keyboard Dialing

Keyboard dialing is supported in either asynchronous or synchronous mode at data rates from 300 bps to 19.2 Kbps. The ASCII character set is used. In *synchronous mode*, all characters are sent in start-stop form.

Control Functions

Control of keyboard dialing is accomplished through the combination of data module settings (e.g., data rate and sync/async mode), interface control leads (e.g., Data Set Ready and Clear to Send), and data transfer (e.g., the dialed numbers and call progress messages).

For human users, the call progress messages are sufficient. However, computers can react more quickly than humans and can take advantage of information provided by interface leads.

DIALING CHARACTER SET

Address information is supplied by the calling device (data terminal or computer) on the TD (Transmit Data) lead [RD (Received Data) lead on the data module (MTDM)]. Call progress information is supplied by the System 85 on the RD lead (TD lead on the MTDM).

The following characters can be used in the dialing (called number) string:

0 to 9	The decimal digits.
A to Z **a to z**	Alphabetic characters, both upper and lower case. These are used for Mnemonic Dialing (Release 2, Version 3 and later).
# and *	The nondigit symbols on the touch-tone dial pad.
+	Control character — Wait for dial tone.
, or %	Control character — Pause, currently 1.5 seconds. The comma is the preferred symbol. However, it is not supported in old releases. The percent (%) will be phased out in later releases of System 85.
( ) - **and (sp)**	Readability characters (ignored by switch processing).
_ or (bs)	Printing and non-printing editing characters (destructive backspace). Either one (undersore or backspace) causes erasure of the last remaining (preceding) character in the entered string (including readability characters). Sequential erase characters effect sequential preceding characters, i.e., 577 31(bs)(bs)(bs)(bs)6 2118 yields 5762118 when outpulsed as a digit string.
(cr) or **(lf)**	Signals the completion of the dialing string. The System 85 takes no action on an entry until CR (carriage return) or LF (line feed) is entered.
@	Line-erase character. The current string is disregarded. If the previous character entered was not another ‘‘@,’’ a new dial prompt is issued.

Differences Between Versions

- Release 2, Version 2, and Earlier Switches

  Mnemonic dialing is not available on Release 2, Version 2, and earlier switches. If unrecognized characters (i.e., letters) are entered and not erased before completion (line feed or carriage return), an error will be indicated and the call will be disconnected.

- Release 2, Version 3, and Later Switches

  Mnemonic dialing allows the use of letters in a dialing string. Up to ten alphabetic characters can be used.

Overview — The Dialing Sequence

Data Call Setup using keyboard dialing proceeds like voice call setup.

- The calling device (data terminal or computer) signals the data module to go off-hook and then waits for a prompt. (Equivalent to dial tone in a voice call.)
- When the DIAL prompt is received, the desired number is entered.
- Call progress indications are provided by the switch.
- When the called number answers, the data module enters a handshake sequence to set and verify consistent operating parameters.
- Upon successful completion of the handshake routine, the data module enters the data mode, and call setup is complete (login message from distant processor).
- If the handshake sequence fails, the caller is informed by a message, and the call is torn down (DISCONNECTED).

Switchhook Control

Call Origination

The calling device signals the data module to go off-hook with a ‘‘break’’ (long space) of at least ten bit periods. If the data module is optioned for *autoanswer*, the data module will go off-hook automatically when alerted for an incoming call when DTR is asserted. If the autoanswer is disabled, a ‘‘break’’ is required.

Call Disconnect

The data module may be put in the on-hook state by dropping DTR for at least 50ms. The controlling device should hold DTR down until the data module responds by dropping DSR. If the long space disconnect option is enabled on the data module, a long space of 2 seconds or more will cause the data module to go on-hook and disconnect the call. In either case, disconnect is effected by dropping DTR or transmitting a 2-second break.

Call Progress Messages

OUTGOING CALL MESSAGES

Call progress is indicated to the calling device (data terminal or computer) by a series of messages generated by the System 85 switch. Generally, these messages correspond to the audible tones that would be received during an equivalent voice call. The messages are shown in Table D-C.

Table D-3. Call Progress Messages — Call Origination

LEADING CONTROL CHARS.	MESSAGE	TRAILING CONTROL CHARS.	MEANING
(cr)(lf)	**DIAL:**	(sp)	This message corresponds to dial tone. The calling device (data terminal or computer) can enter the ‘‘address’’ or number to be called.
(cr)(lf)	**RINGING**		This message corresponds to ringback tone, and indicates that the called device is being rung.
(cr)(lf)	**ANSWERED**	(cr)(lf)	This message corresponds to the removal of audible ringback when the called device answers the call.
(cr)(lf)	**BUSY**		This message corresponds to busy tone.

LEADING CONTROL CHARS.	MESSAGE	TRAILING CONTROL CHARS.	MEANING
	CHECK(sp)**OPTIONS**		This message is unique to data call setup. It indicates that the data modules involved cannot find a mutually agreeable set of operating parameters. On an outside call, this may mean that no suitable modem pooling conversion resource is available. In any event, handshaking has failed, and this message is normally following by **DISCONNECTED**.
(cr)(lf)	**DISCONNECTED**	(bell)	This message appears when the data module goes on-hook (disconnects). It may be followed by an explanatory message: **-TRANSFER** The data call has been returned to a voice set via a data button press. **-OTHER**(sp)**END** The far end has hung up. (sp)**-CALL**(sp)**FAILED** The call has failed for some unspecified reason.
(cr)(lf)	**TRY**(sp)**AGAIN**		This message corresponds to reorder tone (fast busy). It indicates that a facility needed for the call (e.g., modem pooling conversion resource) is not available. A **DISCONNECT** message will follow immediately. The call may be retried later.
(cr)(lf)	**DENIED**		This message corresponds to intercept tone, and indicates that the call is not permitted (e.g., undefined restriction). A **DISCONNECT** will follow immediately. The call is guaranteed to fail again if retried.

LEADING CONTROL CHARS.	MESSAGE	TRAILING CONTROL CHARS.	MEANING
(cr)(lf)	**CONFIRMED**		This message corresponds to ‘‘confirmation’’ tone (three tone bursts), and indicates that a dialed entry (usually a feature dial access code) has been accepted by the switch. This message is usually associated with feature activation or deactivation (e.g., Call Forwarding, Automatic Callback, etc.). A **DISCONNECT** message will follow immediately.
(cr)(lf)(bell) (bell)(cr)(lf)	**CALLBACK, PLEASE**(sp)**ANS-**		These messages are given to the originating device (terminal or computer) when an automatic callback call is being returned. The call originating device should respond with a ‘‘BREAK’’ (long space) to bring its data module off-hook. The switch will then respond with an **ANSWERED** message, followed by appropriate call progress messages.
(cr)(lf)	**AUTOCALL**		This message is sent to the originating device in place of **DIAL:** when it is attempting to originate a call while it has been selected to receive an Automatic Callback call. This only occurs after the Automatic Callback sequence has begun (to the original calling station) but has not yet been completed. This message is followed by call progress message **RINGING** (referring to alerting taking place at the call originating station).
	CONNECTED	(cr)(lf)	This message is given to the originator of an Automatic Callback call, in place **ANSWERED**, when the called party actually answers first. This situation arises from a race condition when the called party goes off-hook (to originate a call) before the Automatic Callback caller responds to the **CALLBACK** message.

LEADING CONTROL CHARS.	MESSAGE	TRAILING CONTROL CHARS.	MEANING
	ANSWERED	(cr)(lf)	This message appears in response to an off-hook from the data module being called.
(cr)(lf)	**WAIT,**	(sp)	This message may be sent to the originator of a call requiring a Modem Pooling conversion resource when the response at the far end is delayed. It has no meaning other than as a ‘‘keep alive’’ message.
(cr)(lf)	**CODE:**	(sp)	This message is sent to a call originator when an **Authorization Code** is required to access facilities needed to complete the call (e.g., Default FRL is too low to use available trunks). Calling device must enter an authorization with a higher FRL, followed by (cr) or (lf) and wait for further call progress messages. Otherwise, the call may not complete.
	TOLL(bell)(sp)**CALL!**		This message indicates that the requested call is being routed over toll facilities, and the originating terminal is toll restricted. A **DISCONNECT** message will follow immediately.
(cr)(lf)	**TIME**(sp)**OUT**		This message indicates that an off-premises call has received no change in call progress for some time (usually 10-seconds). A **DISCONNECT** message will follow immediately.
(cr)(lf)	**ANSWERED-NOT**(sp)**DATA**		This message indicates that the far end has answered an outgoing modem pool call, but the ‘‘noise’’ detected is not recognizable as data answer tone. A **DISCONNECT** message will follow immediately.

INCOMING CALL MESSAGES

When keyboard dialing is enabled on a data module, and the attached device (data terminal or computer) has DTR (data terminal ready) asserted, the System 85 will supply notification of incoming calls. The messages are shown in Table D-D.

Table D-4. Call Progress Messages — Terminating Call

LEADING CONTROL CHARS.	MESSAGE	TRAILING CONTROL CHARS.	MEANING
(cr)(lf)(bell)	**INCOMING**(sp)**CALL-**		This is the normal ‘‘ringing’’ message (the MPDM and DTDM also assert Ring Indicator). If autoanswer is not enabled, the data terminal or computer must enter a ‘‘BREAK’’ (long space) to bring the data module off-hook.
	ANSWERED	(cr)(lf)	This message is supplied by the switch when the data module goes off-hook.
(cr)(lf)	**PLEASE**(sp)**ANS-**		This message is supplied when a data call is transferred to the data module (via the Data Button) from a voice terminal that originated the call. Ringing indicator is not asserted when this message appears (or would appear). If the attached data station does not assert DTR until RI is asserted, it will not know that a call is present.
	ABANDONED	(cr)(lf)	This message is supplied to the called device if the caller abandons the call before it is answered. This message may be preceded by a **DISCONNECTED** message if the caller abandons as the call is being answered.
(cr)(lf)(bell)	**FORWARDED**		This message is sent to a called device when an incoming call is received, and the Call Forwarding—Follow Me feature is active. It corresponds to ‘‘Ring Ping’’ given at a voice terminal as a reminder the forwarding is active.

LEADING CONTROL CHARS.	MESSAGE	TRAILING CONTROL CHARS.	MEANING
	FORWARDED	(cr)(lf)	This message is sent to a called data station when an incoming call is forwarded by the Call Forwarding—Don't Answer feature. This message may be preceded by a **DISCONNECTED** message if the call is answered just as the switch decides to forward the call.
	TRANSFER	(cr)(lf)	This message is sent when an unanswered incoming call is ''intercepted'' by a Return-to-Voice operation from a voice terminal. In the case of a race condition (data module answers just as the call is returned to voice), a **DISCONNECTED** message will precede the TRANSFER message.

Interface Lead States

Monitoring and control of the data module interface leads is important for proper operation of programmed devices (computers). In some cases, information is available from these leads that is not available from the text messages provided by the System 85. In particular, after call setup is completed (the **ANSWERED** message is sent to the caller), the MPDM and the DTDM drop DCD (Data Carrier Detect) and CTS (Clear to Send) while a handshake sequence is conducted between the endpoints. Transmission of user data must wait until DCD and CTS return to the on state.

The interface leads abbreviations, their RS-232C pin assignments, and their applications are shown in Table D-E.

Table D-5. RS-232C Interface Leads

ABBREVIATION	PIN NUMBER	DESCRIPTION
TD	Pin 2	Transmit Data - Data from a DTE (e.g., MTDM) to a DCE (e.g., MPDM).
RD	Pin 3	Receive Data - Data from a DCE to a DTE.
RTS	Pin 4	Request to Send - Request from a DTE to a DCE for permission to transmit.
CTS	Pin 5	Clear to Send - Permission from a DCE to a DTE for the DTE to transmit data.
DSR	Pin 6	Data Set Ready - Signal from a DCE to a DTE that the DCE is ready for operation. When a DCE type data module goes on-hook, this lead is dropped. If keyboard dialing is enabled in the DCE, DSR stays low for a least 50ms. DSR is then reasserted if DTR is asserted by the DTE.
SG	Pin 7	Signal Ground - Common return for all other signals.
DCD	Pin 8	Received Line Signal Detector - Indicates that communication is established with the other end. This lead is commonly called (Data) Carrier Detect.
CI	Pin 12	Signal Rate Indicator 1 - Indication from DCE (e.g., 2224A modem) to DTE (i.e., MTDM) of data rate.

ABBREVIATION	PIN NUMBER	DESCRIPTION
CI2	Pin 13	Signal Rate Indicator 2 - Indication from DCE (e.g., 2224A modem) to DTE (e.g., MTDM) of data rate.
TC	Pin 15	Transmitter Signal Element Timing - Clock provided from a DCE to a DTE for transmitted data (TD). Only used in synchronous operation, when the DCE provides the transmit clock.
RC	Pin 17	Receiver Signal Element Timing - Clock provided from a DCE to a DTE for receive data (RD). Used only in synchronous operation.
CH2	Pin 19	Data Rate Selector 2 - This lead, along with CH (Pin 23) permit selection by a DTE of the transmission rate of a DCE. This lead is supported only by the MTDM with the SW option selected.
DTR	Pin 20	Data Terminal Ready - Indication from a DTE to a DCE that the DTE is ready (e.g., to accept or make a call). If the autoanswer option is selected on the DCE (e.g., MPDM), it will automatically answer a call when the DTE asserts DTR. The MTDM will drop DTR when it goes on-hook. If the PL option is selected on the MTDM, it will reassert DTR after 50ms. All DCE type data modules will go on-hook (and drop DSR) when the attached DTE drops DTR for at least 50ms.
RI	Pin 22	Ring Indicator - Indication from a DCE type data module to a DTE that an incoming call is present. The RI lead is asserted continuously (not pulsed) until the call is answered or abandoned.
CH	Pin 23	Data Rate Signal Selector - Indication from a DTE to a DCE to select one of two operating speeds of the DCE. The MTDM supports selection of three speeds when the SW option is selected.
XTC	Pin 24	Transmitter Signal Element Timing - External transmit clock supplied from a DTE to a DCE when the DTE is the source of timing.

For simplicity, Table D-E does not include the test indication and control leads supported by most data modules and modems.

Basic Operational Sequence

The normal sequence of operation when a DTE is connected to a System 85 DCE with keyboard dialing enabled is as follows:

1. DTE asserts DTR.
2. Data module asserts DSR, CTS, and DCD.
3. DTE transmits ‘‘BREAK’’ to bring data module off-hook.
4. DTE receives **DIAL:** prompt.
5. DTE transmits called number in ASCII characters (e.g., 82133), followed by a carriage return or a line feed.
6. DTE receives call progress messages.
7. When (or if) the called station answers, the data module DCE drops CTS and DCD while the handshake sequence is performed.
8. When (or if) handshake is successful, the data module reasserts CTS, DCD, and sets the CI lead, if appropriately optioned, to indicate the selected speed.
9. Data transmission takes place.
10. If the transmission path is interrupted for 4 seconds, the data module will drop CTS and DCD until the path is restored. If the SIGLS (signal loss disconnection option) is enabled, the data module will go on-hook and drop DSR, CD, and CTS, for at least 50ms.
11. When the call is completed, the DTE may disconnect by dropping the DTR for at least 50ms, or if the DISC (long space disconnect) option is selected, by transmitting a long break of at least 2 seconds. (Clearly, dropping DTR is easier for a program-controlled DTE.) The data module will respond by dropping DSR, CTS, and DCD for at least 50ms.
12. After DSR has been low for 50ms, the data module is ready to initiate or receive another call. If DTR is asserted by the DTE, the data module will assert DSR, CTS, and DCD.

The sequence for receiving an incoming call is as follows:

1. When the incoming call is received, the data module asserts RI.
2. If DTR is already asserted by the DTE and the data module is optioned for keyboard dialing, the data module will have DSR, DCD, and CTS asserted, and the DTE will receive the **INCOMING CALL** message.

   If keyboard dialing is not enabled, the data module will have DSR, DCD, and CTS low.
3. If the auto-answer option is enabled, the data module will go off-hook whenever DTR is asserted by the DTE.

   If keyboard dialing is not enabled, the data module will raise DSR at this time.
4. If auto-answer is not enabled, the DTE must assert DTR and transmit ‘‘BREAK’’ to the data module to bring it off-hook. The data module raises DSR at this time if keyboard dialing is not enabled.
5. When the data module answers the call and keyboard dialing is enabled, the DTE will receive the **ANSWERED** message.

6. After it answers the call, the data module enters a handshake sequence with the calling data module. The data module asserts DSR, but holds DCD and CTS low during handshaking. Operation from this point is identical to that described in the origination sequence.

Keyboard Dialing Examples

The following diagrams illustrate the behavior of the major EIA control leads during keyboard dialing data call setup. These diagrams use the convention of showing ASCII control characters as lower case abbreviations, in parentheses. The first example, in Figure D-3 shows a station-to-station call.

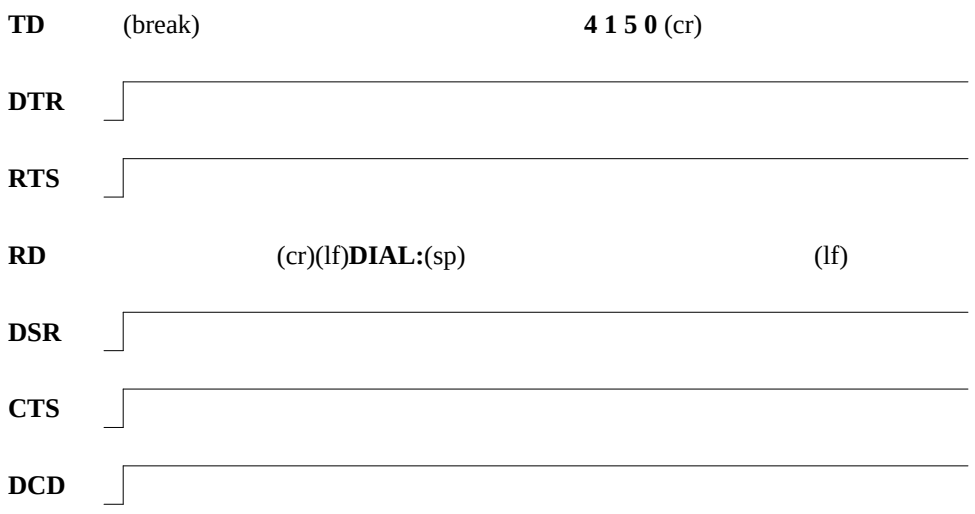

Figure D-3. Control Sequence — Station-to-Station Call (Sheet 1 of 2)

Note: Handshake between calling and called data modules.

Figure D-3. Control Sequence — Station-to-Station Call (Sheet 2 of 2)

Figure D-4 shows an outgoing off-premises call using Modem Pooling. The **WAIT** message may not appear if the call propagation time is short.

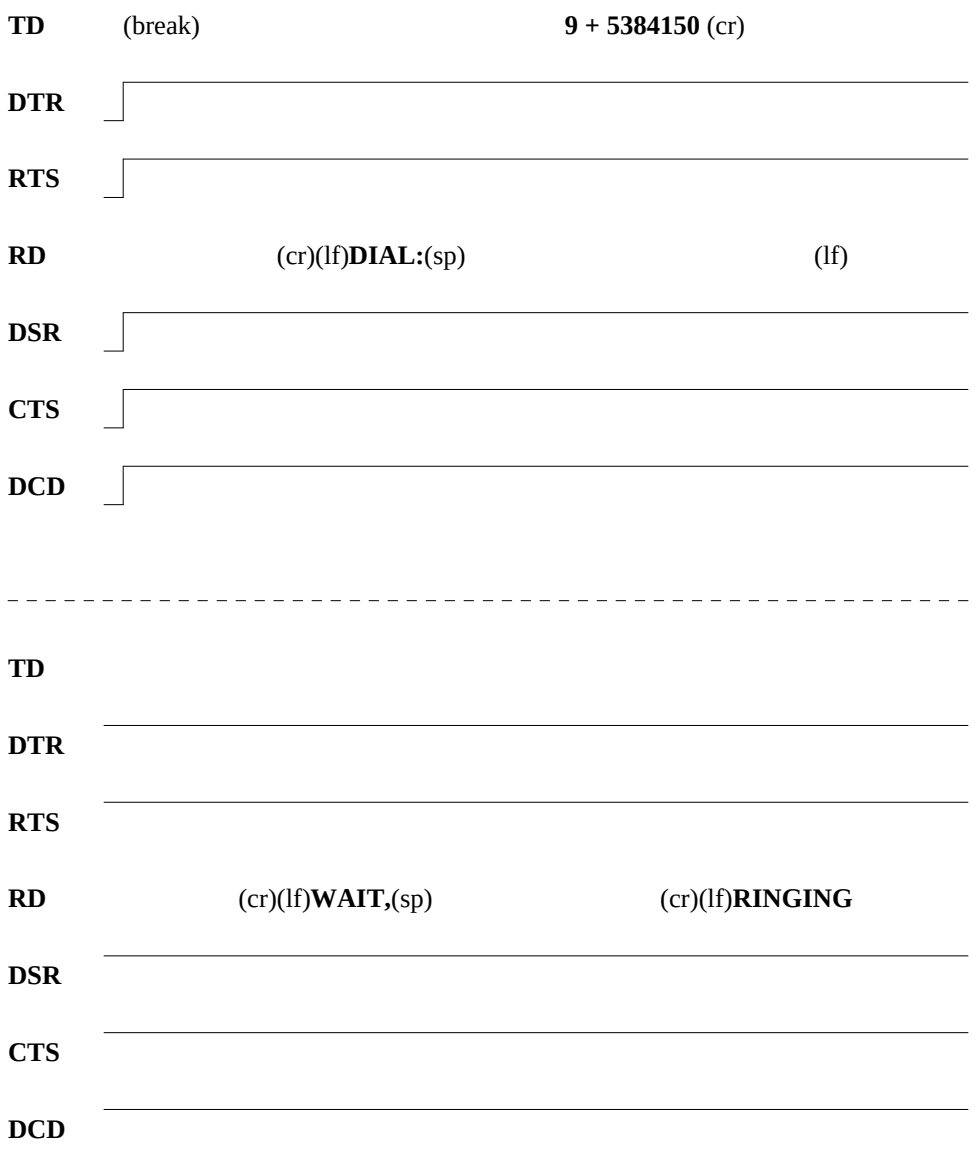

Figure D-4. Control Sequence — Off-Premises Call (Using Modem Pooling)

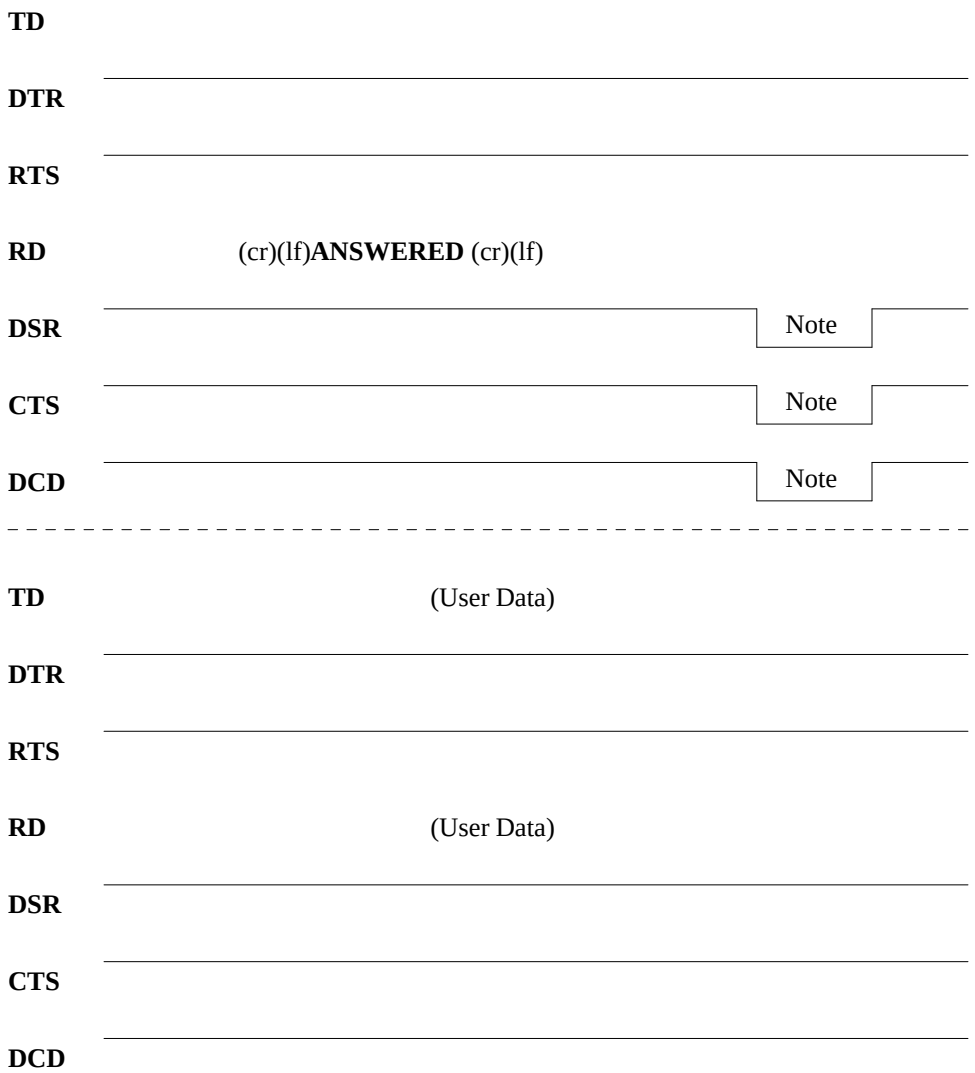

Note: Handshake interval (data modules, then modems).

Figure D-4. Control Sequence — Off-Premises Call (Sheet 2 of 2)

Figure D-5 shows a failed station-to-station call with the called extension busy.

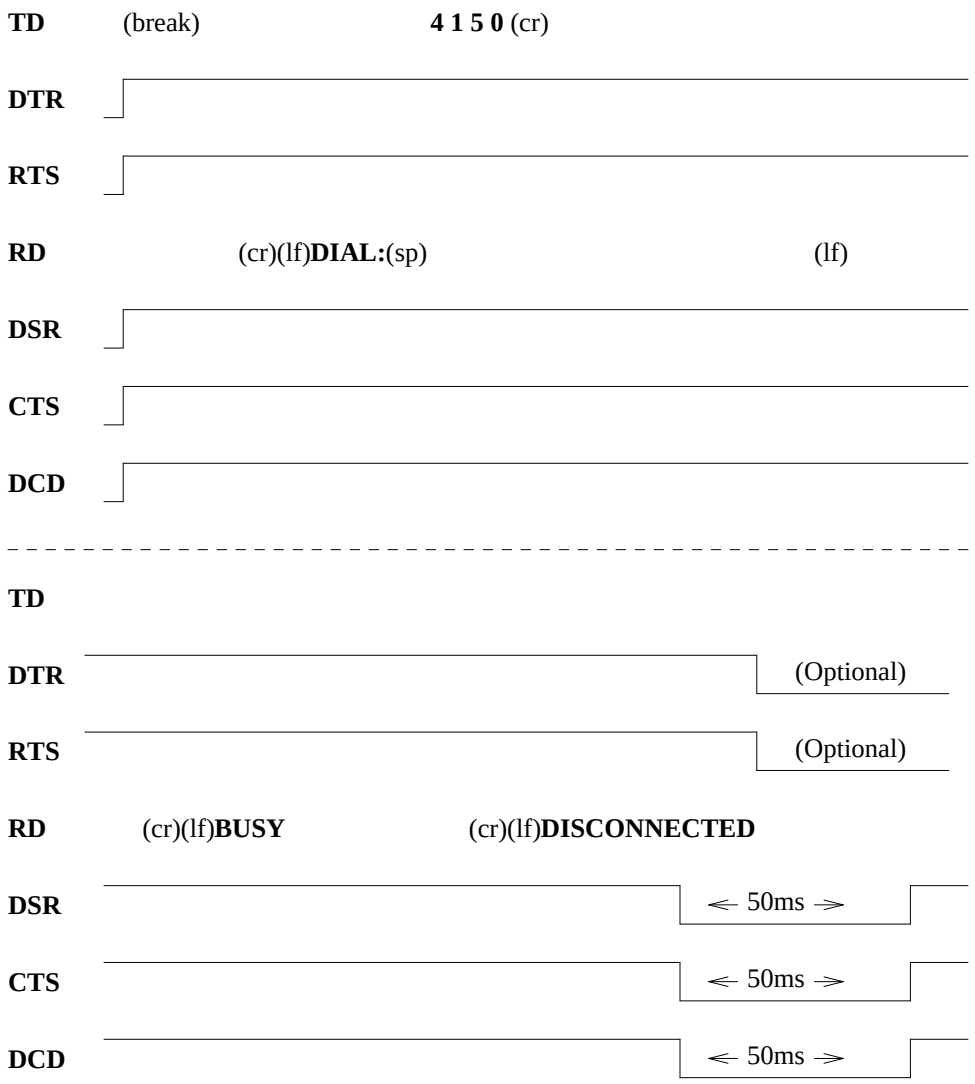

Figure D-5. Control Sequence — Station-to-Station Call, Called Extension Busy

Figure D-6 shows the incoming call answer sequence at a data module that has keyboard dialing enabled and DTR is up.

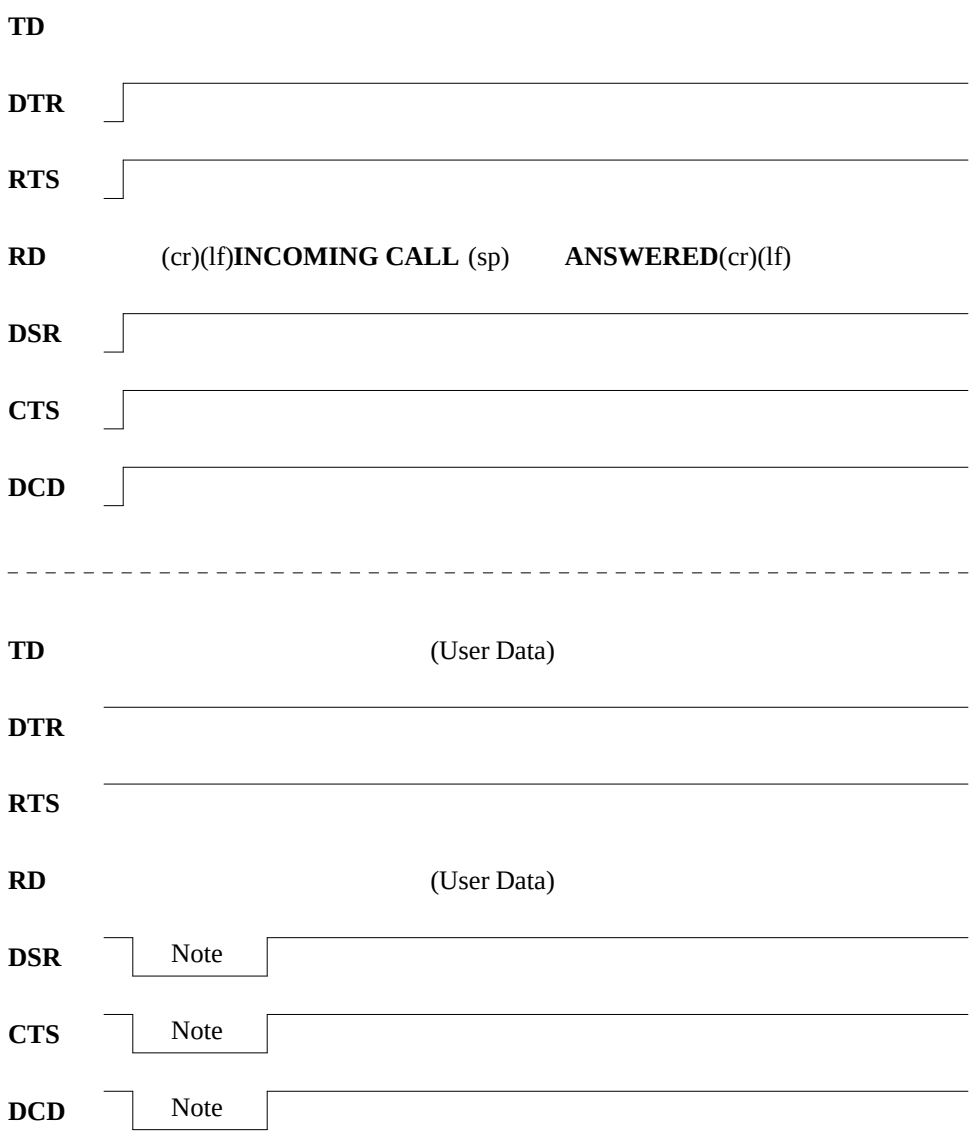

Note: Data module handshake interval.

Figure D-6. Control Sequence — Incoming Call Answer

Figure D-7 shows the disconnect sequence at a data module with keyboard dialing enabled.

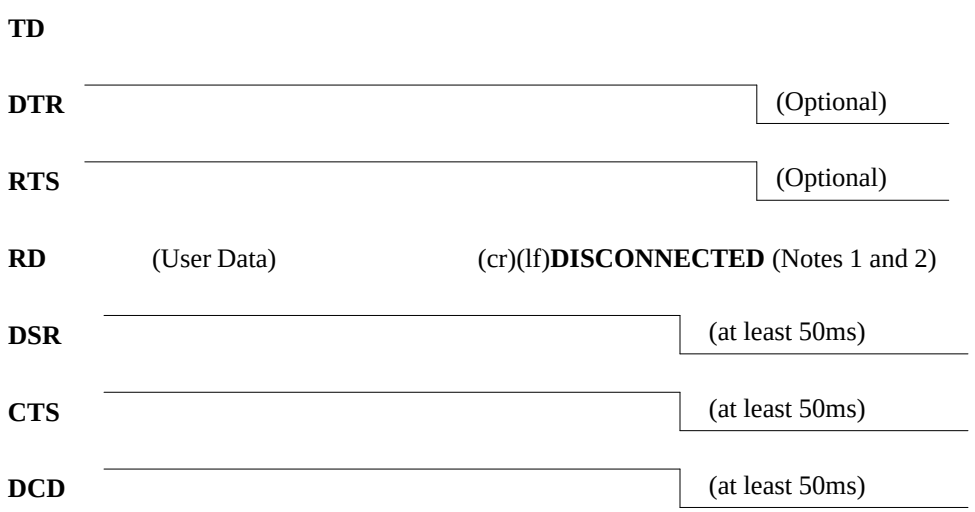

Note 1: A reason-for-disconnect message may follow the **DISCONNECT** before **DSR** drops.

Note 2: The **DISCONNECT** message is suppressed if operating in synchronous mode.

Figure D-7. Control Sequence — Disconnect With Keyboard Dialing Enabled

SPECIFIC SIGNALING FORMATS

The B8ZS Format

The B8ZS format is recommended by the CCITT for use in ISDNs. The frame structure is based on recommendation G.733.

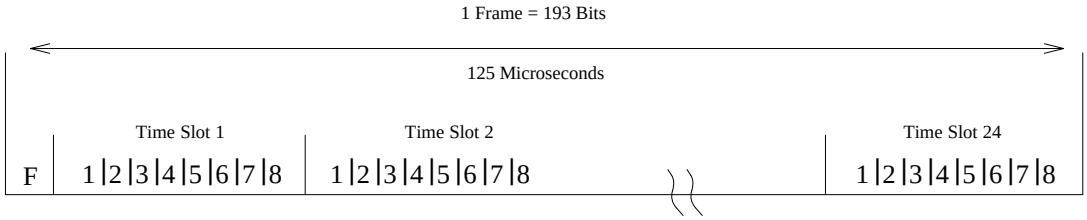

Figure D-8. The B8ZS Digital Frame Format

Each frame is 193 bits long and consists of an ‘‘F’’ (framing) bit followed by 24 consecutive time slots, numbered 1 to 24. Each time slot consists of 8 consecutive bits, numbered 1 to 8. The frame repetition rate is 8000 frames per second.

Time slot assignments are as follows:

Time Slot 24

Assigned to the ‘‘D’’ (data) channel for signaling purposes, if a D channel is present. Note that a D channel may not be required on all carriers. It may be possible for one D channel to support the signaling requirements of more than one 24 channel carrier. This is permitted by the CCITT standard. If a D channel is not used on a carrier, time slot 24 for that carrier can be used as a ‘‘B’’ bearer channel.

Time Slots 1 through 23

Assigned to correspondingly numbered ‘‘B’’ (bearer) channels.

D4 Framing

FRAME NUMBER	S-Bit	
	TERMINAL FRAMING Ft	SIGNALING FRAMING Fs
1	1	—
2	—	0
3	0	—
4	—	0
5	1	—
6	—	1
7	0	—
8	—	1
9	1	—
10	—	1
11	0	—
12	—	0

Figure D-9. D4 Framing Format

Extended Super Frame

The following is the Extended Super Frame (also called the Multiframe) format structure. Each superframe (or multiframe) is 24 frames long and is defined by the FAS (frame alignment signal) formed by every fourth ‘‘F’’ (framing) bit.

Multi-Frame Frame Number	F-Bits			
	Multi-Frame Bit Number	Assignments		
		FAS	R	CRC
1	0	—	m	—
2	193	—	—	e
3	386	—	m	—
4	579	0	—	—
5	772	—	m	—
6	965	—	—	e
7	1158	—	m	—
8	1351	0	—	—
9	1544	—	m	—
10	1737	—	—	e
11	1930	—	m	—
12	2123	1	—	—
13	2316	—	m	—
14	2509	—	—	e
15	2702	—	m	—
16	2895	0	—	—
17	3088	—	m	—
18	3281	—	—	e
19	3474	—	m	—
20	3667	1	—	—
21	3860	—	m	—
22	4053	—	—	e
23	4246	—	m	—
24	4439	1	—	—

FAS: Frame Alignment Signal (...001011...)
CRC: Cyclic Redundancey Check bits (e).

Figure D-10. The Extended Superframe

The ‘‘e’’ (error check) bits are used for error checking via a CRC (cyclical redundancy check) technique. This format is included in CCITT recommendation G.733. The ‘‘m’’ bits are reserved for further study by the CCITT (i.e., possible maintenance applications).

E. APPENDIX E: IMAGES, APPEARANCES, AND EXTENSIONS

PREFACE

The following tutorial is intended to clarify the relationship between images, appearances, and extensions. Confusion has resulted from using the term ‘‘bridged appearance,’’ because it leads the user to believe that all the terminals *sharing* an appearance are physically bridged together. This is not true (only one terminal can bridge on to an existing call of a particular appearance). Therefore, the term ‘‘shared appearance’’ (access point for two or more ‘‘images’’) is used to better describe the functionality of appearances for this application. The term ‘‘image’’ was introduced to distinguish between a particular ‘‘bridged appearance’’ (‘‘now shared appearance’’) and a point(s) of access to that appearance. It is hoped that, rather than compounding the confusion, this new terminology will simplify a somewhat difficult topic.

SHARED APPEARANCES

Definition of Shared Appearance

— **Shared Appearance** — An appearance that allows multiple voice terminals to access it (for example, an executive and his or her secretary may share an appearance, each with an image of that particular appearance). On a multiappearance voice terminal, the point of access (or ‘‘image’’) to a shared appearance is called an appearance button. A shared appearance is an integral part of the Bridged Call feature, which allows any two points of access to the same appearance to participate in a call at the same time.

Terminals With Shared Appearances

It is true, and should be remembered, that one ‘‘point of access’’ to every appearance is located on the home voice terminal. It should also be understood, however, that these points of access (on the home terminal) are in no way preferred over (or superior to) the points of access on the other terminals. From the perspective of System 85 software, these points of access share in a ‘‘peer’’ relationship. Each point of access (or ‘‘image’’) is *an equal* in its ability to place and answer calls.

IMAGES AND SYSTEM 85

Definitions

— **Extension** — A unique 3-, 4-, or 5-digit number by which calls are routed through a private network. This number is primarily associated with a single terminal (the destination of a routed call).

— **Appearance** — A point of access to an extension. (Appearances are also known as ‘‘occurrences.’’) System 85 software allows as many as 12 appearances of an extension. However, a more practical limit is ten appearances per extension. This limit is often imposed by the voice terminals themselves. Generally, multiappearance voice terminals have a maximum of ten appearance buttons. (Normally, three appearances of an extension are assigned to a home voice terminal.)

> **NOTE:** The software limit of 12 appearances can be reached using a 7205H or 7405D voice terminal equipped with the appropriate coverage module.

— **Image** — A point of access to an appearance. System 85 software allows as few as one, and as many as 16, images of each appearance. An appearance with *only one image* is known as an *unshared* appearance. An appearance with *from 2 to 16 images* is known as a *shared* appearance.

Shared appearances are basic to the Bridged Call feature. When an appearance is shared, one other person who shares the appearance where an active call resides can ‘‘bridge onto’’ the call.

> **NOTE:** An extension with *one or more shared appearances* is known as a *shared extension*.

> **NOTE:** System 85 software allows for as many as 192 images of an extension (i.e., 12 appearances × 16 images per appearance).

Description of Images and Appearances

Figure E-1 is a diagram showing the structure of a fictitious extension. This extension, number ‘‘6234,’’ has three appearances, and all three appearances have at least one image. Appearances 6234-1 and 6234-3 are shared appearances; while appearance 6234-2 is unshared.

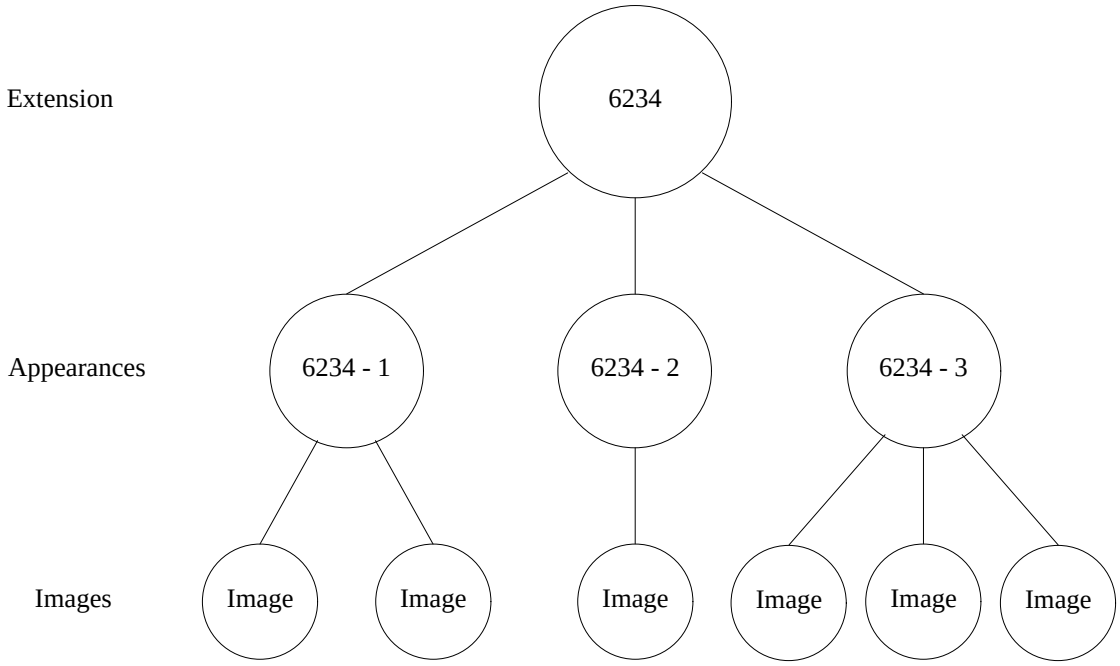

Figure E-1. Relationship of Images, Appearances, and Extensions

Notice the connections within the diagram. Each appearance's images are *independent* of the other appearances' images. For example, an image of Appearance 6234-3 *can only access* Appearance 6234-3, not 6234-1 or 6234-2. Likewise, when a call terminates to Appearance 6234-3, visual alerting (and ringing, if assigned) will only occur for the three images of *that* appearance. When a call does terminate to the third appearance of Extension 6234, the call can be answered from any of the three assigned voice terminals.

Figure E-2 is a simplified drawing containing eight voice terminals labeled A through H. The voice terminals labeled A through E represent multiappearance voice terminals, and F through H represent single-appearance terminals. Since the appearances on terminals F, G, and H are shared appearances, these terminals are known (and administered) as *straight line sets*.

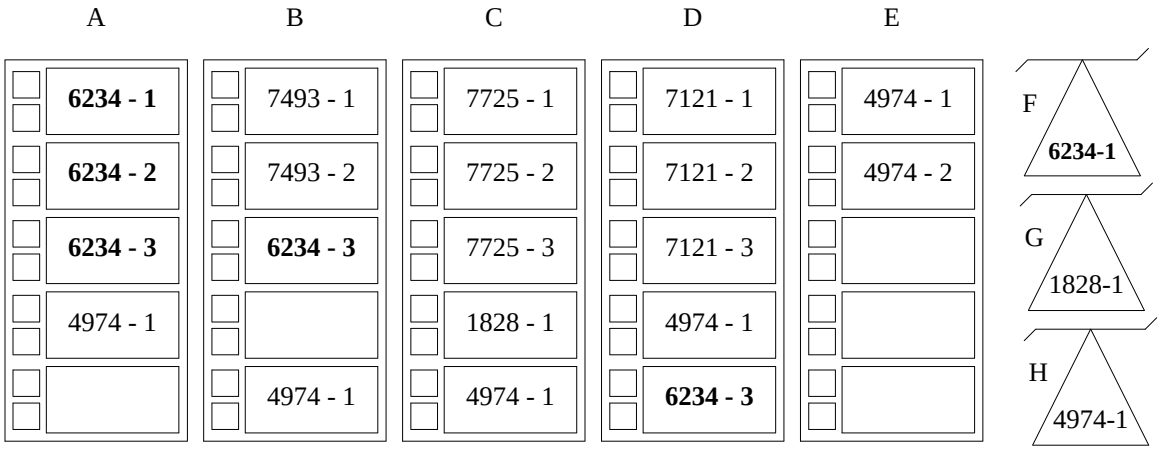

Figure E-2. Shared Extensions

Notice that Extension 6234, previously shown in Figure E-1, is also shown (in bold print) within this figure. For Extension 6234, voice terminal A would be referred to as the home terminal. An image of every appearance is located on this terminal. The two images of the first appearance are located on terminals A and F. The one image of the second appearance is located on terminal A. The three images of the third appearance are located on terminals A, B, and D.

> **NOTE:** The image configurations shown in Figure E-2 are *administrable*, but not necessarily *functionally desirable*. This figure is only meant to show some of the possibilities. It is left to the reader to devise functional image configurations to suit specific needs.

Another extension that is worth some discussion is extension 1828. Although less apparent than for the previous extension, the home terminal for this extension is terminal G. The two images of appearance 1828-1 are located on voice terminals G and C. Single-appearance voice terminal G must be administered as a straight line set in order to share the appearance with terminal C.

This arrangement is typical of an executive/secretary arrangement where the secretary performs most of the calling duties. Terminal G would be located on the executive's desk, and the secretary would handle terminal C. Terminal C is home to extension 7725 with three appearances. Using three appearances, the secretary can effectively handle most of the calling responsibilities. However, extension 1828 serves as a direct line to the executive. When this extension is unanswered, or when ringing is transferred to the secretary, the secretary can also answer these calls using the image on terminal C.

Visual Alerting

When a call terminates to an appearance of an extension, the green status lamp flashes for every image of that appearance on a multiappearance voice terminal.

ADMINISTRATION

Home Terminal Administration

— **Home Terminal** — If ‘‘home terminal’’ is assigned to an image of one appearance on a voice terminal, the home terminal designation is applied to the image of every appearance of that terminal’s extension number. (An image can be designated as ‘‘home terminal’’ in Procedure 052, Word 1, Field 12.)

Send All Calls Group Administration

— **Send All Calls Group** — When ‘‘Send All Calls Group’’ is assigned to one image of an extension on a voice terminal, this assignment is applied to every image of the same extension on the same voice terminal. (‘‘Send All Calls Group’’ is assigned to an extension’s images residing on a specific voice terminal in Procedure 052, Word 1, Field 14.)

Administrable Characteristics of Appearances

— **Terminating/Originating** or **Originating Only** — When one of these attributes is assigned to an image of an appearance, every image of the appearance takes on the same attribute. (The attribute is assigned in Procedure 052, Word 1, Field 13.)

— **A/D Ringing Encode** — A ringing encode is assigned for the Abbreviated and Delayed Ringing feature. When manual, automatic, or manual and automatic ringing transfer is assigned to an image of an appearance, the type of transfer chosen is applied to every image of the appearance. (The type of transfer is assigned in Procedure 052, Word 2, Field 3.)

Administrable Characteristics of Images

— **Ring Type** — A type of ringing for the Abbreviated and Delayed Ringing feature (i.e., no ringing, ringing, delayed ringing, or abbreviated ringing) is independently specified for each image of an appearance. (The ringing type is assigned in Procedure 052, Word 1, Field 11.)

— **Ringing Transfer Encode** — A ringing characteristic for the Ringing Transfer feature (i.e., no ringing transfer, ring when active, or no ring when active) is independently specified for each image of an appearance. (The ringing transfer encode is assigned in Procedure 052, Word 2, Field 4.)

IMAGES AND THE BRIDGED CALL FEATURE

The software of the Bridged Call feature allows *any two images* of the same appearance to participate in a call at the same time. But, as previously mentioned, the images of the separate appearances are independent.

Within the context of the Bridged Call feature, the following conditions still hold true: Any image of a particular appearance can place and/or answer a call on the appearance. Once the call (either terminating or originating) is established, another image of the same appearance can bridge onto the call. (An image of a different appearance cannot bridge onto the call.) Also, a third image cannot enter the call at the same time. When this is attempted, the switch returns reorder tone to the user of the third image.

F. APPENDIX F: ENHANCED TRUNKING

GENERAL

The System 85 switch connects to most types of trunks currently available. Trunking services that can be used with the System 85 include:

- Both analog and digital trunking to the local service area (Central Offices)
- Where *special access* is available, both analog and digital trunking to class 4 toll offices
- ISDN/PRI (Integrated Services Digital Network/Primary Rate Interface) service for both public and private networks (Version 4 only)
- Both analog and digital tie trunk connections for private networks.

ENHANCEMENTS

In Release 2, Version 4, System 85 introduces several enhanced trunking services that improve trunk performance, trunk maintenance, and service operations. These enhancements fall into two general categories:

- ISDN trunking services

  These enhancements allow the System 85, Release 2, Version 4, switch to participate in the emerging worldwide networking standard.

- General trunking: enhanced signaling and error recovery

  These enhancements address trunk signaling and trunk seizure failure problems.

- Trunk Partitioning

  Certain trunk types allow dedication to a partition or can be shared between partitions in a Tenant Services switch.

Many of the Version 4 enhancements are interrelated. For instance, the general trunking enhancement, *separation of trunk type and signaling*, supports the new ISDN *dynamic trunk type*. Also, the new *glare detection and handling* enhancement is available only on the new *true wink start, true delay dial, and ISDN trunks*. Several general trunking enhancements, like *glare detection*, and *retry* apply to ISDN trunks.

While these trunking enhancements are most useful in large and complex networking operations, improvements in trunk services will effect most System 85 users.

ISDN Trunking Services

The introduction of the ISDN/PRI feature calls for several new trunking services. These services can be used for both public and private networks.

ISDN TRUNK SIGNALING

An ISDN uses a signaling protocol that is different from the traditional types of analog and digital (DS1) trunk signaling. Analog trunks use on-hook and off-hook signals to pass information between switches. Standard digital (DS1) trunks pass the same information with ‘‘A’’ and ‘‘B’’ bit signals. ISDNs pass data in the form of *message packets*. This is called MOS (Message Oriented Signaling). This messaging protocol provides more flexibility and increased ‘‘power’’ to the signals passed between switches.

DYNAMIC TRUNK TYPE

A new trunk type, the dynamic trunk type (120), is available for use with ISDNs. This trunk type is made possible by the power available from message type signaling and by the *separation of trunk type and signaling* enhancement. With this trunk type, the switch can change the features and services of a trunk based on requirements from the MOS message packet or local call setup. The same trunk can be used for a variety of purposes (i.e., local CO trunk, WATS, or 800 Service trunk, etc.) as the needs of the system dictate. This trunk type is used for the ISDN feature Call-by-Call Service Selection.

GENERAL TRUNKING: ENHANCED SIGNALING AND ERROR RECOVERY

Enhanced Trunk Signaling: The trunk signaling enhancements consist of the *separation of trunk type and signaling* which adds flexibility to trunk administration, and three added trunk signaling protocols: *true wink start, true delay dial, and ISDN MOS*. The ISDN MOS protocol has already been discussed. The other trunk signaling enhancements are described in the following sections.

Separation of Trunk Type and Signaling

In the past, the ‘‘trunk type’’ defined the signaling, the features, and services available on a trunk interface. The trunk type determines the trunk signaling protocol to be used. With this system, no flexibility is possible when providing features and services.

The separation of trunk type and signaling enhancement allows the separation of features and services from the signaling used with the trunk. This enhancement provides the flexibility needed for *Special Access* networking arrangements and for the ISDN feature *Call-by-Call Service Selection*. A given trunk can be used for a variety of purposes, without regard to the type of trunk signaling used to set up or maintain the connection. As an added, long range benefit, the separation of trunk type and signaling will decrease the pressure and complexity of adding new trunk types to provide for new features and services as they are developed in the future.

This enhancement does not allow the use of any type of signaling with any type of trunk. It does, however, significantly increase the flexibility available in assigning signaling protocols to different trunk types.

Maximum flexibility is achieved when this enhancement is combined with the new ISDN dynamic trunk type (trunk type 120). With this combination the trunk services and signaling can be adjusted by the switch on a call-by-call basis. Table F-A lists the trunk types to which the separation of trunk type and signaling enhancement can be applied, and Table -B lists the signaling number (used in Table -A) and their associated signaling protocols.

Table F-1. Trunk Types and Their Signaling Characteristics

TRUNK TYPE AND DESCRIPTION	SIGNALING					
	E&M	**GS**	**RB**	**LS**	**ISDN**	**Other**
All 2-Way APLT Trunks:						
12 APLT	* 9					
13 APLT	* 10					
14 APLT	* 8					
15 APLT	* 5					
Regular CO Trunks:						
16 1-Way In Attendant Completing	4,21†	* 1		19	20	
17 1-Way Out DOD	4,21†	* 1		19	20	
18 1-Way Out DOD w/ Parity Test		* 2				
19 2-Way In Attendant Completing/DOD	4,21	* 1		19	20	
20 2-Way With Parity Test		* 2				
Foreign Exchange Trunks:						
21 1-Way In Attendant Completing	4,21†	* 1		19	20	
22 1-Way Out DOD	4,21†	* 1		19	20	
23 1-Way Out DOD w/ Parity Test		* 2				
24 2-Way In Attendant Completing/DOD	4,21†	* 1		19	20	
25 2-Way with Party Test		* 2				
WATS Trunks:						
26 1-Way In Attendant Completing	4,21†	* 1		19	20	
27 1-Way Out DOD or Toll Terminal Access for TSPS	4,21†	* 1		19	20	
28 1-Way Out DOD with Party Test		* 2				
DID Trunks:						
30 Immediate Start DID	4		‡ * 3		20	
31 Wink Start DID	11		* 3		20	

* = Default Signaling.

† = Direct connections to class 4 offices (4 ESS switches) using multifrequency signaling require wink start for incoming trunk seizures. Because of operational characteristics, the 4 ESS switch will send at least one address digit. However, the System 85 will ignore this digit.

‡ = Call processing will eliminate the wink to distant end.

TRUNK TYPE AND DESCRIPTION	SIGNALING					
	E&M	GS	RB	LS	ISDN	Other
E&M Trunks:						
32 1-Way In Dial Repeating	* 4					
33 1-Way Out Automatic	* 4					
34 1-Way Dial Repeating Out	* 4	1				
35 1-Way In Automatic	* 4	1				
36 2-Way Dial Repeating Both Ways	* 4					
37 2-Way Dial Repeating In, Auto Out	* 4					
38 2-Way Auto In, Dial Repeating Out	* 4	1				
39 2-Way Auto Both Ways	* 4	1				
40 1-Way In Dial Repeating, Delay Dial	* 27					
41 2-Way Dial Repeating, Wink Start In Wink Start Delay Dial Out	* 26 11,21,22				20	
42 1-Way In Wink Start	* 26 11,21,22				20	
43 1-Way Out Wink Start or Delay Dial	* 26 11,21,22				20	
44 2-Way Dial Repeating, Delay Dial In	* 27					
45 2-Way Dial Repeating, Delay Dial In Wink Start In Auto Out	* 27					
46 2-Way Dial Repeating In, Delay Dial Wink Start Out	* 25 12,21,22				20	
47 2-Way Dial Repeating Delay Dial In, Wink Start Delay Dial Out	* 24 12,21,22 23				20	
Special Trunks:						
50 Remote Access 2-Way Dial Tone In, Ground Start and Dial Tone Out	21	* 1			20	
51 Telephone Dictation Interface						* 7
52 Recorded Announcement Interface						* 7
53 Code Call Interface						* 7
54 Loudspeaker Paging Interface						* 7
55 Touch-Tone Sender						0
57 CAS Release Link Trunk	* 13					
58 ANI Interface						* 6
62 Music On Hold Interface						0
65 Contact Interface						0
66 CAS Release Link Trunk In at Main, 1-Way In	* 14					
67 Audio Interface						0
68 UCD Delay Recorded Announcement						0

* = Default Signaling.

TRUNK TYPE AND DESCRIPTION	SIGNALING					
	E&M	GS	RB	LS	ISDN	Other
Special E&M Trunks:						
70 1-Way In Immediate Start	* 15					
71 1-Way Out Immediate Start	* 15					
72 2-Way Immediate Start	* 15					
73 1-Way In Wink Start	* 16					
74 1-Way Out Wink Start	* 16					
75 2-Way Wink Start Both Ways	* 16					
76 1-Way Delay Dial In	* 17					
77 1-Way Delay Dial Out	* 17					
78 2-Way Delay Dial Both Ways	* 17					
90 ACD First Announcement	* 7					
91 ACD Second Announcement	* 7					
92 ACD Queue of Origin Announcement	* 7					
93 Malicious Call Trace	* 7					
Data Trunks:						
100 Tone Detector						0
101 Analog Data Modem Pool	* 4					
102 Digital Data Modem Pool						* 18
103 Host Access PDM						* 18
104 Host Access TDM						* 18
105 3BAP (AP32) DCPI						* 18
106 EIA Port						* 18
107 ISN/EIA Port						* 18
108 DMI Wink In, Auto Out	* 5				20	
109 DMI Wink In, Wink Out	* 11				20	
ISDN Trunks:						
120 ISDN Dynamic					* 20	

* = Default Signaling.

Table F-2. Trunk Signaling Number Definitions

SIGNALING NUMBER	DEFINITION
0	No Signaling Required
1	Ground Start
2	Ground Start with Parity Test
3	Loop/Reverse Battery, Wink Start
4	E&M Immediate Start In and Out
5	E&M Wink Start In and Immediate Start Out
6	ANI ( )
7	Auxiliary Equipment
8	E&M Immediate Start In and Out
9	E&M Immediate Start In and Wink Start/Delay Dial with Dial Tone Out
10	E&M Wink Start In and Wink Start/Delay Dial with Dial Tone Out
11	E&M Wink Start In and Wink Start/Delay Dial Out (Universal Sequence)
12	E&M Immediate Start In and Wink Start/Delay Dial Out
13	E&M Release Link Trunk Out
14	E&M Release Link Trunk In
15	E&M Main Satellite, Immediate Start
16	E&M Main Satellite, Wink Start
17	E&M Main Satellite, Delay Dial
18	‘‘S’’ Channel Signaling, Host Access, GPP
19	‘‘S’’ Channel Signaling, Host Access, EIA
19	Loop Start
20	DMI (Digital Multiplexed Interface), ISDN (Integrated Services Digital Network), MOS (Message Oriented Signaling)
21	E&M Wink Start In and Out
22	E&M Delay Dial In and Out
23	E&M Delay Dial In, Wink Start/Delay Dial Out
24	E&M Delay Dial In, Wink/Delay Dial Out with Fail On Time-Out
25	E&M Immediate Start In, Wink/Delay Dial Out with Fail On Time-Out
26	E&M Wink Start In, Wink/Delay Dial Out with Fail On Time-Out
27	E&M Delay Dial In, Immediate Start Out with AUTOVON

TRUE WINK START AND DELAY DIAL SIGNALING ON NETWORK TRUNKS

The Universal Trunk Sequence

Prior to V4, the System 85 used the ‘‘Universal Trunk Sequence’’ protocol rather than a true wink start or delay dial signaling protocol on E&M trunks. The universal trunk sequence is a combination of the wink start and delay dial trunk signaling protocols that allows easy administration of trunk signaling. It is compatible with a wide range of older switching equipment. The wink signal or delay dial signal provides an integrity check for the originating switch. The start of the wink or delay dial signal tells the originating switch that the distant switch has heard its bid for use of the trunk. The end of the wink or delay dial signal indicates that the distant switch is ready to receive digits. As an added benefit, it also shows that the signaling path (the trunk, intervening switches, and the distant switch) is working properly.

Universal Time-Out Sequence

Prior to the Universal Time-Out Sequence (Winkless Solution), the universal trunk sequence would wait for a set time (described in Table F-C) and then send digits. With the Universal Time-Out Sequence, the customer can set a time-out bit that controls the switch response to the absence of return signals.

With the Universal Time-Out Sequence, the customer has the option of treating the time-out as an error, or allowing the call to complete (outpulse digits). If the time-out is treated as an error (time-out bit set to 1), the sequence fails and the caller hears reorder tone. The call must be placed again.

Table F-3. Universal Trunk Sequence Timing

ACCESS TO TRUNK	TIMING
Direct Dial Access	No signal from far end: Switch waits 2 to 4 seconds and begins sending digits. If signal received from far end: The switch sends digits after the far end on-hook signal is received, or waits 10 to 12 seconds before declaring seizure failure. With ‘‘Universal Time-Out Sequence’’ and no signal from far end: The switch waits 2 to 4 seconds before declaring seizure failure. Caller receives reorder tone.
AAR/ARS	No signal from far end: The switch waits a *customer set period* and sends digits. If signal received from far end: The switch sends digits after the far end on-hook signal is received, or waits 10 to 12 seconds before declaring seizure failure. With ‘‘Universal Time-Out Sequence’’ and no signal from far end: The switch waits a *customer set period* before declaring seizure failure. Caller receives reorder tone.

While the universal trunk sequence works well and simplifies administration, there is one significant problem with this protocol, its inability to detect far end trunk failures either because of transmission line failure or distant switch failure. This is because it *assumes* far end ready even when the start signal is not received. Also, it is not compatible with the new services, *glare detection and retry on failure of outgoing trunk seizure*.

E&M Wink Start

A true wink start signal is an off-hook to on-hook signal that lasts from 0.14 to 0.29 seconds. The end of the ''wink'' tells the calling switch that it may start sending digits. The beginning of the ''wink'' must not start earlier than 0.14 seconds after the incoming seizure and must occur within 5 seconds of seizure (for System 85 switches). Figure F-1 shows a typical E&M Wink Start signaling sequence.

True wink start signaling enables the System 85 to detect far end trunk failures (wink not received). It also works with the new services: *glare detection* and *retry on failure of outgoing seizure*.

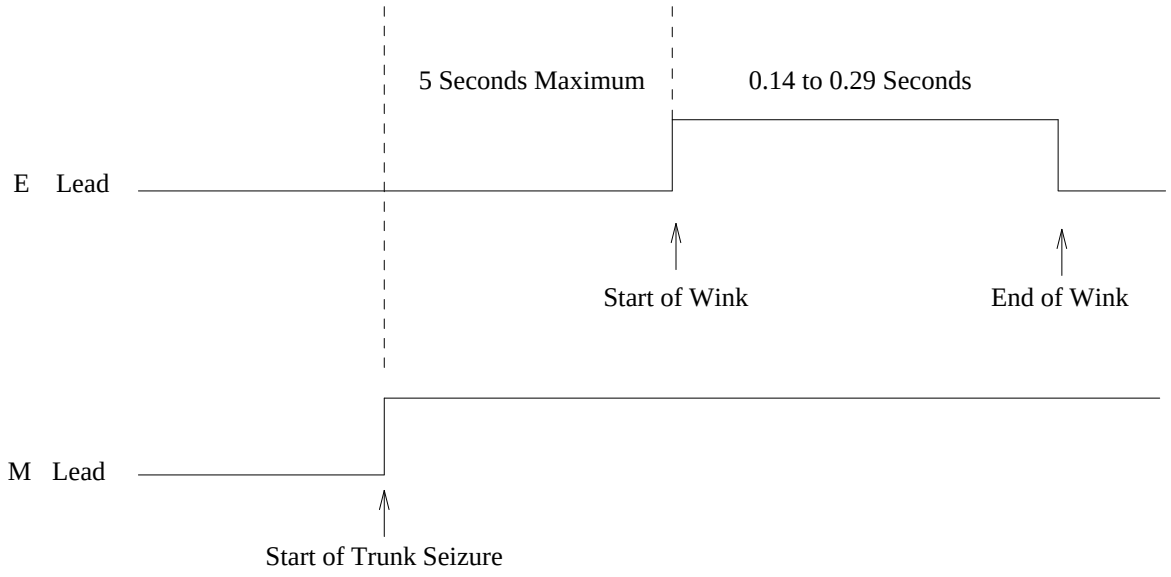

Figure F-1. E&M Wink Start Signaling Sequence

E&M Delay Dial

A delay dial signal is an off-hook signal that tells the calling switch that trunk seizure is acknowledged, followed by an on-hook signal that shows the called switch is ready to receive digits. The off-hook must occur within 0.15 seconds of trunk seizure. The delay (off-hook pulse) must last at least 0.14 seconds. For System 85 switches, if the delay is longer than 5 seconds the call is assumed to be blocked or in glare. Figure F-2 shows a typical E&M delay dial signaling sequence.

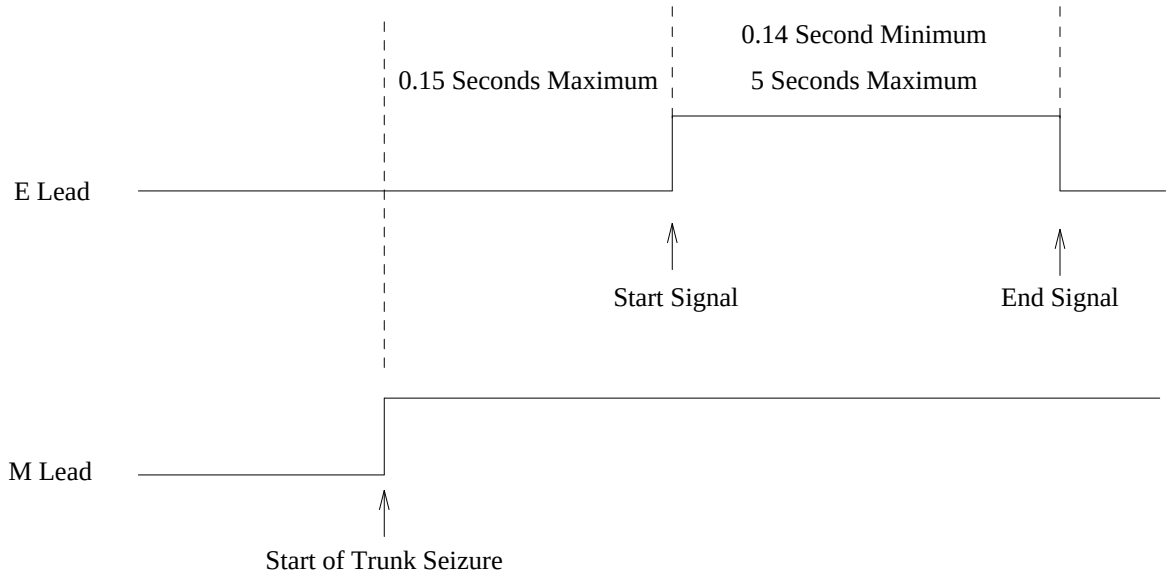

Figure F-2. E&M Delay Dial Signaling Sequence

The true delay dial signaling protocol, like the true wink start, enables the System 85 to detect far end trunk failures (the start signal or ready to receive signal is not received) and also works with the new *glare detection* and *retry on failure of outgoing trunk seizure* services.

Considerations

Direct Access to Delay Dial and Wink Start Trunks: For trunks selected directly (by trunk dial access code rather than AAR or ARS) it may be necessary for the calling party to wait for call-progress tone for up to 5 seconds. For example:

- The System 85, Release 2, Version 4, switch will wait up to 5 seconds for the start of wink or delay dial signals. If these signals are not detected, the call could fail with reorder tone or retry could be attempted.
- If the return signals are detected, glare could be possible. The delay dial sequence takes 5 seconds before declaring glare. The wink start sequence is quicker. Wink start declares glare after 0.35 seconds. If possible, wink start is the recommended signaling sequence.

Trunk Seizure Problems

Trunk seizure problems can result from a variety of conditions including circuit failure, loss of signaling supervision, problems at the distant switch, or glare. In the past, the user was required to hang up and place the call again. The general trunking enhancements improve switch response to these problems and reduce the impact on users when trunk seizure problems occur.

The general trunking enhancements that deal with trunk seizure and trunk failure problems apply to both analog and digital trunks. There are eight specific enhancements that fall into this category:

- Glare detection and handling
- Retry on failure of outgoing trunk seizure
- Automatic detection, busy out, and service alerting, for improper trunk signaling
- Far-end removal from service on 2-way trunks when local busy-out is in effect
- Customer administrable treatment of permanent incoming seizures
- Enhanced call processing error recovery for DS1 interface failure
- Scanning and recovery mechanism for hyperactive DS1 interface
- Enhanced ground start signaling sequence.

Glare Detection and Handling

Glare occurs when both switches (both ends of a 2-way trunk) attempt to seize the same trunk at the same time. In the past, seizure failures resulting from glare were treated in the same way as seizure failures resulting from other problems. The caller received intercept tone and was required to go on-hook (hang up) and place the call again.

With glare detection, the System 85, Release 2, Version 4 switch can distinguish a failure because of glare from failures that result from other problems. For private network tie trunks, the switches are administered in either of two ways. One switch is given priority and is allowed to seize the trunk when glare occurs. The other switch is administered to back off of a seizure with glare and can then use the *retry on failure* enhancement to seize a different trunk.

The glare detection enhancement applies only to **private network trunks** that use *true wink start, true delay dial, or ISDN trunk signaling*. For non ISDN trunks, administration at both ends of the trunk must be coordinated to ensure that the opposite ends of each trunk will respond differently (one goes ahead while the other backs off). For ISDN trunks, the glare detection and retry on failure services function as part of the ISDN *channel negotiation* service and do not have to be separately administered.

RETRY ON FAILURE OF OUTGOING TRUNK SEIZURE

With previous systems, when a trunk seizure fails the caller receives either intercept or reorder tone. In either case, the caller must hang up and place the call again.

With this enhancement, when a trunk seizure failure occurs, the switch attempts to place the call a second time without involving the user.

This enhancement applies only to **private network trunks** that use *true wink start, true delay dial, or ISDN trunk signaling*.

AUTOMATIC DETECTION, BUSY OUT, AND SERVICE ALERTING FOR IMPROPER TRUNK SIGNALING

In previous systems, outgoing trunk seizure failures from signaling error may or may not be identified in maintenance error logs. With this enhancement, users can administer an option to provide automatic alarms to either AT&T supplied or customer owned service centers. Another option is available that will automatically remove problem trunks from service (busy out).

FAR-END REMOVAL FROM SERVICE ON 2-WAY TRUNKS WHEN LOCAL BUSY-OUT IS IN EFFECT

With previous systems, when a 2-way trunk is maintenance busied out, the control is applied only to the local switch end of the trunk. It is still possible for the far end switch to attempt to seize the busied out trunk for an incoming call.

This enhancement allows the System 85, Release 2, Version 4, switch to set a *reverse make busy* on 2-way private network tie trunks. Both ends of the trunk must terminate on Version 4 switches administered for far-end removal from service (a 1 in Field 6, Word 3, Procedure 100, incoming permanent seizure). This allows the trunk to be removed from service at both ends without causing an alarm at the distant switch. This enhancement applies a trunk seizure on maintenance busied 2-way tie trunks. At the distant switch, this becomes a *permanent incoming seizure*. NOTE: A caller can inadvertently initiate far-end removal. If a call receives intercept tone and does not go on hook within 20-seconds (i.e., lays the receiver down while intercept tone is being received to look up a number), the distant switch may assume that far-end removal is being initiated and go into the *permanent incoming seizure* processing when it is not intended.

CUSTOMER ADMINISTRABLE TREATMENT OF PERMANENT INCOMING SEIZURES

A permanent incoming seizure can be caused by several conditions. Two basic condition are addressed by this enhancement. One is when an incoming trunk seizure is connected to a tone source (i.e., intercept tone) and disconnect supervision is not returned. The other is when the distant switch initiates a 2-way maintenance busy out seizure.

With Release 2, Versions 4, two administrable options are available.

> *Make Idle Option*: The first involves timing the incoming seizure. Incoming trunk calls that progress to a tone state are timed. Once the established interval has expired, the call is assumed to be a permanent incoming seizure. Intercept treatment is removed and an attempt is made to idle (abort) the trunk. If the trunk goes idle at both ends, it is returned to service. If the trunk does not go idle at both ends, it is passed to an alarm escalation routine. This routine attempts to release the trunk once each minute for the first 15 minutes and if not successful raises a warning alarm. If the trunk remains in the seized state for 2 hours it escalates to a minor alarm.
>
> *Reverse Make Busy Option*: If the trunk is administered for the reverse make busy option (this option is administrable on a trunk group basis), the trunk is scanned to ensure the near-end is on-hook. If the near-end is idle, the trunk is placed in a state that waits for the far-end to go on-hook. No alarms are created, and the trunk returns to service when the seizure is released.

Enhanced Call Processing Error Recovery for DS1 Interface Failures

This enhancement improves the handling of various alarm conditions recorded on the DS1 interface board. Most of these alarms are DS1 specific. The alarms that this enhancement responds to are:

- Loss of signal (conductor broken)
- Loss of frame alignment (red alarm)
- Remote frame alarm, far end cannot frame (yellow alarm)
- Processor sanity
- Other, which includes:
  - — Loss of multiframe alignment, near end cannot recover signaling (not applicable to ISDN)
  - — Far end is remote loop back or in a maintenance state (blue alarm)
  - — Remote multiframe alarm, far end cannot recover signaling (not applicable to ISDN).

When any of these alarm conditions are detected on the DS1 interface status register, the remaining idle trunks on that circuit are put into a transient state to make them unavailable for use. Call processing periodically checks the interface status. If the alarms are cleared, the trunks are returned to service. The remaining channels on the interface (channels that are either in use or in the process of disconnecting) will dynamically return to service with the normal disconnect process.

This enhancement eliminates ineffective call attempts on the faulty circuits until the problem is resolved.

SCANNING AND RECOVERY MECHANISM FOR HYPERACTIVE DS1 TRUNKS

A hyperactive DS1 trunk is a DS1 interface circuit that is rapidly sending repeated on-hook off-hook transitions to call processing. With the high-speed signaling capability of the DS1 interface, this problem can quickly overload the call processing capacity of a switch. This enhancement detects hyperactive DS1 circuits and takes them out of service before they cause call processing problems. This applies to DS1 trunks that use bit oriented (A and B bit) signaling. It does not apply to ISDN trunks that use message oriented signaling.

ENHANCED GROUND START SIGNALING SEQUENCE

In earlier versions, a ground start outgoing seizure would wait indefinitely for a return tip ground signal. If this ready signal is not received, the calling party must go on-hook and try again. With Version 4, the ground start sequence has been changed to fail the call after a 5-second wait if the calling party does not go on-hook sooner. NOTE: Glare detection and retry capability has not been developed for ground start trunks.

Enhancement Application by Signaling Type

The specific enhancements that apply to a particular trunk depend on the signaling protocol used.

STANDARD TRUNK SIGNALING PROTOCOLS

The following trunk signaling protocols are effected by one or more of the general trunking enhancements available with System 85, Release 2, Version 4.

E&M (Ear and Mouth) Wink Start and Delay Dial Trunks

Signaling, retry, automatic maintenance busy out, and permanent seizure enhancements will apply to all types of incoming trunks. Glare detection and retry applies to networking trunks only (trunk types 41, 42, 43, 46, and 47) for Version 4.

Ground Start

Outgoing seizure signaling sequence is enhanced in Version 4 to provide an automatic time-out if the distant end does not return a ready signal.

Loop/Reverse Battery

This signaling type is used for 1-way incoming (DID) service in System 85. The permanent incoming seizure enhancement applies to this signaling type in Version 4.

Digital (DS1) Trunks

Digital trunks use the same signaling protocols used by analog trunks plus the new ISDN signaling protocols. Where an analog signaling protocol is used, the same enhancements apply to both analog and digital trunks. Also, the specific DS1 enhancements apply to digital trunks, and where trunks are used for ISDN interface the specific ISDN enhancements apply.

PARTITIONED TRUNK TYPES

The following trunk types can be dedicated to or shared between partitions in a Tenant Services Switch:

- 12 - 50
- 70 - 78 (Tie-trunks)
- 103 - 109 (PDM, TDM, AP 32 DCPI, EIA, ISN, and DMI trunks)
- 120 ISDN — Dynamic Trunk Type.

G. APPENDIX G: THE DCIU (DATA COMMUNICATIONS INTERFACE UNIT)

GENERAL CONCEPTS

This appendix provides a general description of the DCIU and its functions. Some recommended solutions for typical DCIU administration situations are also provided. The DCIU is used with the following features:

DCS (Distributed Communications System)

- Direct connection between two switch processors
- Indirect connection between two switch processors with one or two intervening processors (hop connection)
- Centralized messaging services in a DCS
- Connection to a switch processor that is not a System 85
- Alternate routing connections.

Applications Processor Features

- Call Management System
- Leave Word Calling
- Message Center Service.

AUDIX.

The solutions recommended for given applications are not necessarily the only way the DCIU could be administered for the example; however, they should work and can be used to clarify DCIU administration requirements.

THE DCIU

The DCIU is a special purpose processor that operates as a packet switch. It is located in the Common Control Cabinet of the System 85. The DCIU receives call related information from the switch processor, assembles this data into units called packets, and then routes these packets of data to the appropriate distant processor.

Data Paths: Packets of data are transmitted over specially designated *virtual circuits* called data paths. They are virtual circuits because they are composed of logically or software defined elements rather than discrete physical components. A data path consists of all the circuit elements that provide the communications connection between the local switch processor and a specific external application. Data paths are discussed in more detail later in this appendix.

The DCIU also receives packets from distant processors. It routes this information either to the local switch processor or to another distant processor. The routing of packets received from an external source is based on internal instructions contained in the DCIUs firmware (entered through the DCIU Administration process).

Releases

Two DCIU releases are available. The DCIU used in a given application depends on the switch to which it is attached.

RELEASE 1 DCIU

The Release 1 DCIU provides up to 4 links with 20 logical channels each and is used by DIMENSION System FP8 switches and System 85, Release 1 switches.

RELEASE 2 DCIU

The Release 2 DCIU provides up to 8 links with up to 64 logical channels each and is used by System 85, Release 2 switches.

Both DCIU releases support the same general applications; however, the Release 2 DCIUs provide an increased capacity (more links with more logical channels on each link) and a somewhat increased functionality. For example, in the DCS application the Release 2 DCIU provides an alternate routing capability while the Release 1 version does not. Alternate routing is described in the DCS section of this manual and later in this appendix.

SCI (Switch Communications Interface)

System 75 switches do not use a DCIU but have their own circuitry, the SCI, that performs the same functions. The SCI is compatible with the DCIU link and is functionally similar to the Release 1 DCIU. The SCI provides up to 4 DCS links with up to 20 logical channels each.

Figure G-1 depicts the Release 2 DCIU as a box with nine links (0 through 8). The outside links (1 through 8) connect to other DCIUs, and the internal link (link 0) connects to the local switch processor. The internal link is referred to as the switch link to distinguish it from the outside DCIU links.

The most significant difference between the switch link and the DCIU links is the protocol they use. The switch link uses DMA (Direct Memory Access), while the DCIU links use the BX.25 transmission protocol. The logical channels on the switch link are called *ports*. Logical channels or ports on different links are associated through virtual circuits called network channels.

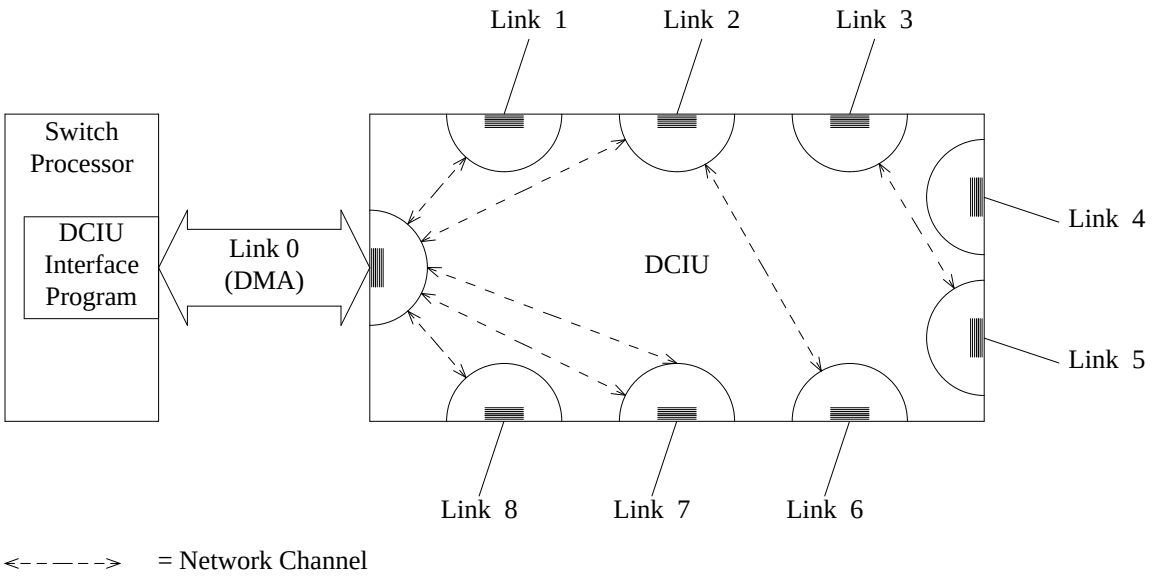

Figure G-1. Release 2 DCIU

DATA PATHS

In the context of DCIU communications, data paths are virtual circuits that form the complete route used by applications messages (packets) from the time they enter the DCIU environment (incoming port) to the time they are sent on to the final processor (outgoing channel or port at the destination switch, adjunct or applications processor). This concept sometimes appears to work differently in a DCS environment than in other DCIU applications. The differences are in the complexity of the data paths used and are more apparent than real.

In the DCS Environment

Each node in a DCS Cluster must have a data path to every other node. In a DCS, these data paths allow the switch processors to exchange call processing information, and it is this exchange of information that enables the network to function as one switch. With centralized messaging service, there must also be a data path between the messaging adjuncts and the switches they serve. *DCIU Links* and *Network Channels* provide these data paths. These data paths may use multiple DCIU links and network channels and can sometimes be set up dynamically. These arrangements are described in detail in the DCS section of this manual and later in this appendix under *DCIU Linkage Options.*

THE DCIU LINK

The DCIU link is the physical or hardware connection between the DCIU and an external processor. External processors include APs, AUDIX Adjunct, other DCIUs, and SCIs. The DCIU links are identified as links 1 to 8 on Release 2 DCIUs (links 1 to 4 on Release 1 DCIUs and SCIs). The DCIU link is sometimes called a *signaling link.* It provides a full duplex, synchronous data path between the DCIU and the external processor.

The DCIU link must be a clear channel dedicated circuit. Traditionally this has meant that each DCIU link was a discrete physical circuit. However, with the availability of digital Dedicated Switch Connections, a DS0 channel on a DS1 carrier can now be used to provide the DCIU link.

The DCIU link is a major part of the *data path* but is only part of the data path. A full data path consists of a switch link and port, one or more network channels, and one more DCIU link logical channel pairs. A *link logical channel pair* is a specific logical channel on a specific DCIU link. The DCIU links carry applications information packets between processors via *logical channels*.

Logical Channels

A logical channel is a segment of the data stream carried on a link. A logical channel carries a packet or frame of data. Packets and frames, in the DCIU context, are essentially the same thing. A frame actually contains some additional header and trailer information that is used by the BX.25 protocol but does not otherwise affect the information content of the packet.

Switch Link Ports

For the Switch Link (Link 0), logical channels are called *ports*. For Release 2 DCIUs used on System 85, Release 2, Version 3 and earlier switches, these ports have fixed reservations. These reservations are shown in Table G-A and must be used as reserved. That is, Port 1 is reserved for Message Center Service on AP 1. Port 1 must be used for this purpose and only this purpose. If AP 1 does not support Message Center Service (or there is no AP 1), Port 1 cannot be used.

LOGICAL CHANNEL LIMITATIONS

For the switch link and DCIU links when both ends of the link connect to a Release 2 DCIU, each link supports up to 64 software-assigned logical channels. If either end of a DCIU link connects to a Release 1 DCIU, the link is limited to 20 logical channels.

NETWORK CHANNELS

A DCIU passes data between links along internal virtual circuits called network channels. Like the DCIU links, network channels are another major part of the data path. Network channels are set up in administration (Procedure 257, Word 1) and provide routing for packets through the DCIU (from the incoming link logical channel or port to the outgoing link logical channel or port).

When a packet is received, it is routed via a network channel to the appropriate logical channel (or port) on the outgoing link. For example, data intended for the local switch is routed to a designated port on the switch link (link 0), and data intended for a distant processor is routed to the appropriate logical channel and DCIU link. For packets intended for a distant switch in a DCS, this can work differently depending on the release DCIU involved.

Table G-1. Release 2, DCIU Switch Link Port Reservations (NOTE)

PORT	APPLICATION	PORT	APPLICATION	PORT	APPLICATION
1	MCS 1	23	DCS 3	44	DCS 15
2	LWCH 1	24	DCS 4	45	CLK 6
3	LWCL 1	25	DCS 5	46	MCS 6
4	AMWL 1	26	DCS 6	47	LWCH 6
5	TRAF	27	DCS 7	48	LWCL 6
6	TEST 1	28	DCS 8	49	AMWL 6
7	SMDR	29	DCS 9	50	DCS 16
8	CLK 1	30	MCS 4	51	DCS 17
9	CLK 2	31	LWCH 4	52	DCS 18
10	MCS 2	32	LWCL 4	53	CLK 7
11	LWCH 2	33	AMWL 4	54	MCS 7
12	LWCL 2	34	DCS 10	55	LWCH 7
13	AMWL 2	35	DCS 11	56	LWCL 7
14	CLK 3	36	DCS 12	57	AMWL 7
15	MCS 3	37	CLK 5	58	DCS 19
16	LWCH 3	38	MCS 5	59	AUDIX 1
17	LWCL 3	39	LWCH 5	60	AUDIX 2
18	AMWL 3	40	LWCL 5	61	AUDIX 3
19	CLK 4	41	AMWL 5	62	AUDIX 4
20	TEST 2	42	DCS 13	63	SPAR 3
21	DCS 1	43	DCS 14	64	SPAR 2
22	DCS 2				

NOTE: The numbers to the right of the application abbreviation refer to the adjunct number for that application. That is, MCS 1 refers to Message Center Service on AP 1.

LEGEND:

MCS	Message Center Service	CLK	AP clock synchronization
LWCH	Leave Word Calling, high priority	DCS	Distributed Communication System
LWCL	Leave Word Calling, low priority	TEST	DIP/DCIU test
AMWL	Automatic Message Waiting Lamp	AUDIX	Audio Information Exchange
TRAF	Traffic data	SPAR	Spare, not assigned
SMDR	Call Detail Reporting and Recording		

- In a Release 1 DCIU, network channels are given fixed assignments. That is, a specific network channel always associates packets received on a particular link/logical channel or port with a specific logical channel on the link leading to a distant switch or other application. This arrangement is called a *fixed network channel* or PVC (Permanent Virtual Circuit).

- In Release 2 DCIUs, the packet routing concept is modified to allow both fixed network channels and *alternate routing*. The fixed network channels work the same as in a Release 1 DCIU. With alternate routing, the DCIU can set up network channels based on the *destination routing code* contained in header information in the frame. With alternate routing, up to three routes (a primary route and one or two alternate routes) can be assigned to each destination routing code. Alternate routing is discussed in detail later in this appendix and in the DCS section of this manual.

BX.25 PROTOCOL

The DCIU uses the BX.25 protocol to pass messages to other DCIUs. The BX.25 protocol is a layered protocol, like the international standard (X.25) for packet switching networks. Layering separates specific functions into distinct levels that communicate with matching levels at a distant processor. Layering also enables successive levels of the protocol to deliver specific services to higher levels, without concern for the details of underlying layers. The BX.25 protocol segments data to be transmitted into packets, appends framing and routing information to each packet, and queues them into a buffer where they await delivery.

Packets are numbered, and the DCIU keeps a copy of each packet. As it sends out a packet, the DCIU sets a timer. If confirmation of delivery is not received within a specific time period (this time period is set in administration, Procedure 256), the packet is retransmitted. The DCIU link can also be reset and restarted if packets are not delivered or arrive out of sequence.

DCIU LINKAGE OPTIONS

Two DCIU linkage options are available: direct and indirect linkage. Figure G-2 illustrates both of these types of linkage in a DCS. The DCIU link between node 1 and node 2 is a direct linkage connection, and the connection between node 1 and node 3 is indirect.

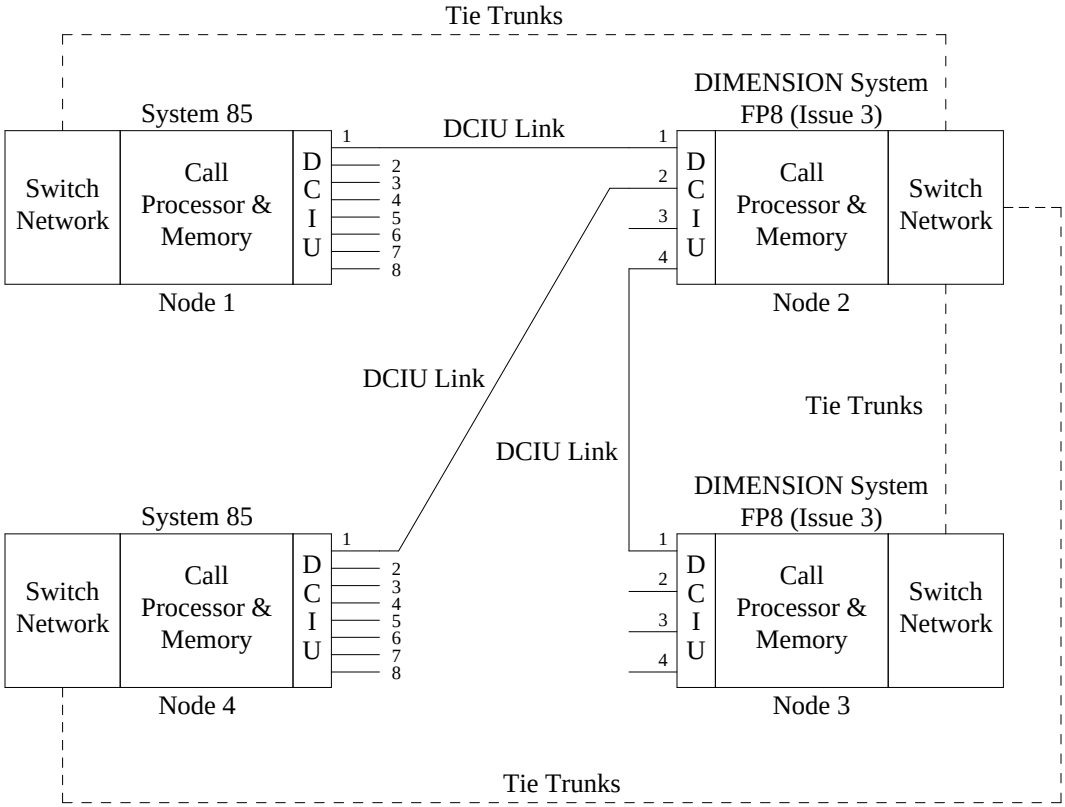

Figure G-2. Link Minimization DCS Configuration

General Application

In most DCIU applications, the linkage used will be *direct.* In direct linkage, the DCIUs for the sending and receiving processors are connected directly by a single carrier. That is, there is a direct physical connection between the link leads of the sending and receiving DCIUs. There are no intervening DCIUs or other processors. This does not exclude necessary interfacing devices such as modems or adapters (see **The DCIU-to-DCIU Interface** later in this appendix). Direct linkage is used where both processors are colocated (on-premises) such as local APs and adjunct processors, and where only two processors are involved (i.e, a two node DCS).

DCS Applications

In the DCS application, two options are available for DCIU linkage. These are direct and indirect linkage. Direct linkage is the same as described in the preceding paragraph. Indirect linkage uses one or two hops between nodes. The term ''hop'' is used when the data path passes through an intervening DCIU before reaching its destination. This is similar to the tandeming process for tie trunks but should not be confused with tie trunk tandeming. In this appendix, the term ''**hop**'' is used to distinguish DCIU data paths from communications paths.

INDIRECT LINKAGE

Figure G-2 shows a DCS cluster with a minimum linkage configuration. Link minimization uses indirect linkage to provide the minimum essential data paths needed for DCS service. At optimum, there would be only one data path possible between any two nodes. Notice that there are no direct data links available between nodes 1 and 3, 1 and 4, or between nodes 3 and 4. All data paths between nodes 1, 3, or 4 are indirect. They must pass or hop through node 2. Because this arrangement requires less hardware, it is less expensive than direct linkage. It also uses fewer link connections at each DCIU (except the hub in a star configuration) leaving more links available for other applications. However, minimum linkage is less reliable than direct linkage. For example, failure of the data link between nodes 2 and 4 (Figure G-2) will cause loss of transparency between node 4 and all other nodes in the network.

DIRECT LINKAGE

Direct linkage provides *''no hop''* data paths between nodes in a DCS. A fully implemented direct linkage configuration would provide a no hop data path between every node in a DCS. In a large or highly disbursed network, fully implemented direct linkage is not always practical and usually some combination of direct and indirect linkage is used. The principle advantage to direct linkage is reliability. In the example shown in Figure G-3, if the data link between node 1 and node 2 fails, transparency is lost only between these two nodes. If *alternate routing* were available, transparency could be maintained even between nodes 1 and 2.

The problems with direct linkage are: for a system with three or more nodes, direct linkage requires more hardware and is, therefore, more expensive than a link minimization arrangement; direct linkage limits the number of nodes that can be included in a DCS; and direct linkage uses DCIU connections that may be needed for other applications.

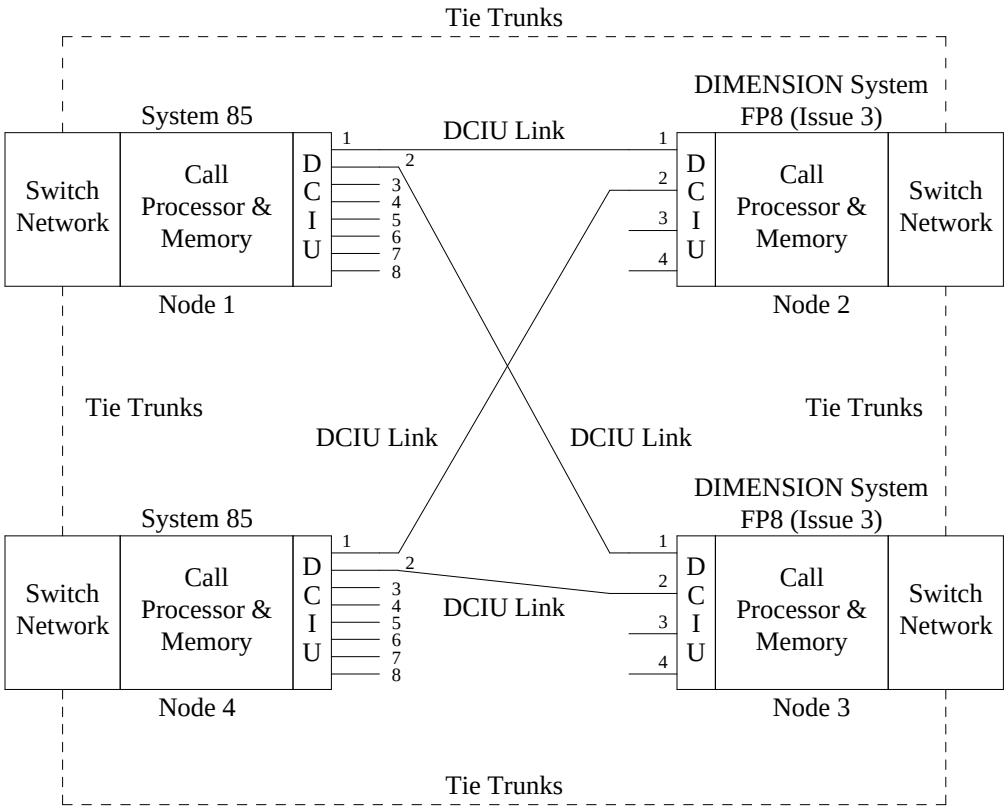

Figure G-3. Direct Linkage DCS Configuration

ALTERNATE ROUTING OF DCIU MESSAGES

Alternate routing is assigned on a per-network channel basis and provides a way for DCIU messages (DCS applications) to bypass a failed DCIU link. Alternate Routing is available only on data paths where Release 2 DCIUs are used at both ends. The use of link minimization configurations tends to limit or eliminate the effectiveness of alternate routing.

Network Channels

Alternate routing is enabled for a network channel using switch administration Procedure 257, Word 1. When a network channel is assigned alternate routing, the second link and logical channel (Component B) is filled with dashes. The alternate routing network channel is then assigned a *destination routing code* in Procedure 257, Word 2. In effect, the destination routing code takes the place of the second logical channel link pair for alternate routing network channels. When alternate routing is used, the packet header includes the destination routing code and postage.

Destination Routing Code

The destination routing code identifies the node for which a packet is intended. It must be common throughout the network. That is, a given destination routing code must identify the same destination switch from any node in the system. The destination routing code is used at each alternate routing DCIU to select up to three routes (a primary and two alternate routes) that can be used from that DCIU to reach the

destination switch. At the DCIU serving the destination switch, only one route (the primary) is used. This route passes the packet to the designated port on the switch link. Alternate routing network channels are assigned to destination routing codes at each alternate routing node using Procedure 257, Word 4.

Postage

Postage is the system's way of keeping track of the number of hops that have been used. A data path is limited to a maximum of two hops. When the DCIU receives a packet that is using alternate routing, it decrements the postage; and if the result is negative, it discards the message (the two hop limit has been used up). If the result is positive, the DCIU selects a network channel from the routing table that serves the destination routing code of the packet.

Fixed Network Channels

Alternate routing paths can use fixed routing network channels or PVCs at hops or intervening nodes. When an alternate routing path passes through a node that uses a PVC, it works just like a nonalternate routing data path. That is, it passes from the incoming link logical channel to a specific, predesignated outgoing link logical channel. However, alternate routing packets must begin and end on alternate routing nodes. The additional header information used for alternate routing (destination routing code and postage) cannot be provided or deleted by a fixed network channel switch.

Routing on Failure

Alternate routing uses a technique called routing on failure. The alternate routing DCIU tests a selected link before sending a packet. The primary data path (first-choice routing) is used until a link failure is encountered. When a link failure occurs, the DCIU checks for an alternate (second-choice route). If an alternate route is available, that link is tested and so on. Up to two alternate routes (a second and third choice) may be assigned to serve the same destination routing code at each alternate routing DCIU.

DATA PATH LOOPING

A logical infinite loop can occur if a data path returns to a point it has already passed through and is routed over a link logical channel that it has already used. The use of alternate routing introduces the possibility of setting up a logical infinite loop. This is because alternate routing data paths are not fixed but are set up dynamically at each DCIU as the packet progresses from one link to the next. The best way to avoid an infinite loop in an alternate routing pattern is by careful network engineering. However, should a looping pattern start, the *postage* in the header information will eventually run out, and the loop will be stopped automatically. Additional discussion and some examples of alternate routing patterns are given in the DCS section of this manual.

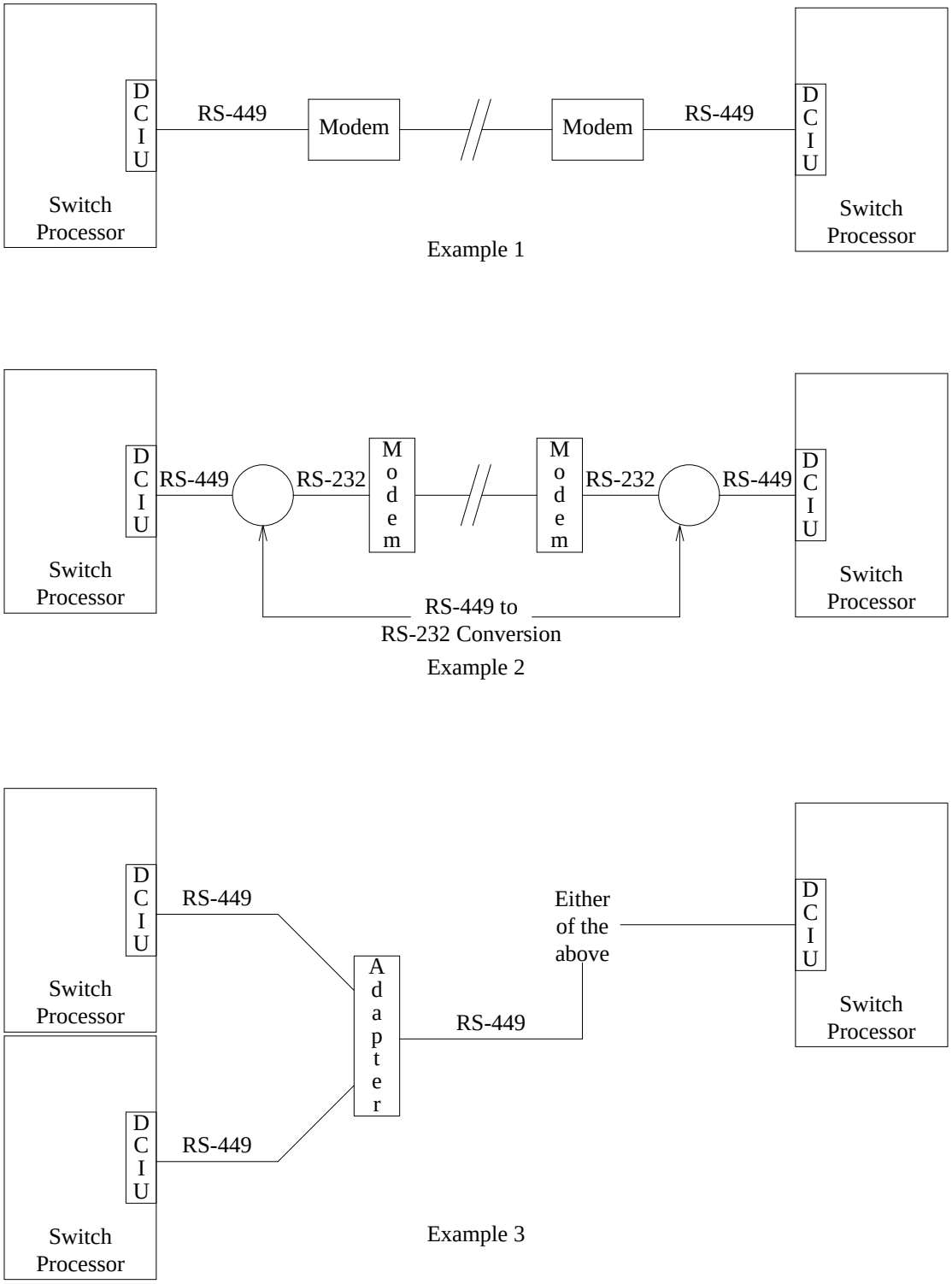

Figure G-4. DCIU Connecting Arrangements

The DCIU-to-DCIU Interface

Figure G-4 shows three examples of DCIU-to-DCIU connections. Example 1 shows a common arrangement. This data link uses standard RS-449 cable and a modem that support up to 9.6 Kbps full duplex, synchronous data. Modems are required in this type of data link unless the connection meets all the following conditions:

a. Both switches are located in the same building.

b. Both switches have the same single-point ground.

c. The cable distance between the DCIUs is less than 200 feet.

Example 2 shows a data link using RS-232C modems. This configuration requires the use of RS-449 to RS-232C converters (shown by the circles) because the output of the DCIU is RS-449. This is actually the same type of connection shown in Example 1 except for the type of modem used.

Example 3 shows a duplicated configuration. If a switch has a duplicated processor, the DCIU must also be duplicated but not the data links. The duplicated DCIU output is filtered by an adapter to remove duplicate packets, and a single output packet stream is sent on to the next DCIU. From this point on, the data link can use either of the arrangements shown in Examples 1 and 2.

Examples 2 and 3 assume that the conditions required for a connection not using modems are not met. These requirements are the same for all DCIU-to-DCIU connections.

BASIC DCIU ADMINISTRATION

The following example (Figure G-5) shows a 3-node DCS that uses both direct and indirect linkage. In this example, node 1 is a System 85 Release 2 switch, node 2 is a System 75 switch, and node 3 is an Enhanced DIMENSION System (Feature Package 8, Issue 3) switch. Sample MAAP (Maintenance and Administration Panel) translations are for node 1 only (the System 85 switch). They show typical ways to set up the following:

- A local AP link with Message Center Service
- A local AUDIX Adjunct
- A direct linkage DCIU path to node 3 (Enhanced DIMENSION System) for DCS messaging traffic
- A direct linkage DCIU path to node 2 (System 75) for DCS messaging traffic
- The Network Channel for the data path to node 2
- The Network Channel for the data path to node 3
- The Network Channel that supports the data path hop from node 2 (System 75) to node 3 (Enhanced DIMENSION System).

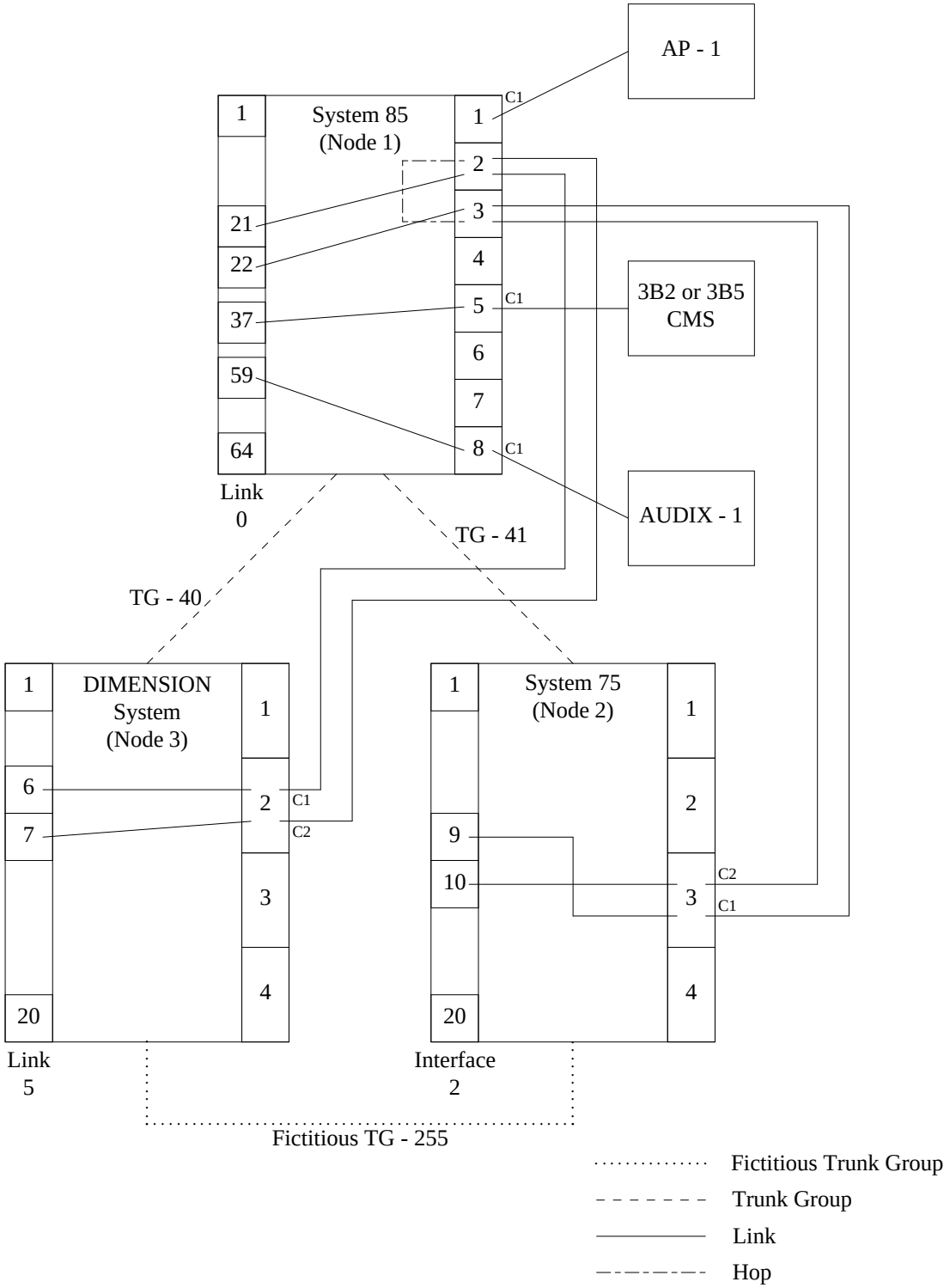

Figure G-5. Typical 3-Node DCS Administration

ADMINISTERING THE AP LINK WITH MESSAGE CENTER SERVICE

PROCEDURE 256 — DCIU ADMINISTRATION — LINK CHARACTERISTICS

WORD 1	1	1	6	0	0	1	1	1		0	0	PROC 256
	1	2	3	4	5	6	7	8		9	10	

WORD 1, LINK ASSIGNMENT

Field 1: This is the link number of the DCIU (external) link being assigned. The range is from one to eight.

Field 2: This field shows if the link has been assigned or not. A ‘‘1’’ means that the link is assigned, a ‘‘0’’ shows the link is unassigned.

Field 3: This sets the *Baud Rate* or data transmission rate for this link. For the AP 16, the baud rate should be set to ‘‘6’’ (9600 bps).

Field 4: This field identifies the transmission characteristics of the local end of the link as either DTE (Data Terminal Equipment) with encode ‘‘0,’’ or DCE (Data Communications Equipment) with encode ‘‘1.’’ In most cases it doesn’t matter which end of a DCIU link is DTE and which end is DCE; however, the two ends of any DCIU link must not match. That is, one end must be DTE, and the other end must be DCE.

Field 5: This field identifies the link as being fixed or no dial up (encode 0) or dial up (encode 1). For most DCIU link application, this will be fixed (encode 0).

Field 6: This field identifies the protocol to be used on the link. For DCS applications, this is always be set to ‘‘1’’ for the BX.25 protocol.

Field 7: This field identifies the type of machine that is located at the far end of the data path being set up. For direct linkage connections, this is also the far end of the specific link. For an AP 16 attached to a System 85 switch, the appropriate encode is ‘‘1.’’ Encodes are listed in the Feature Translations Manual for the switch being administered.

Field 8: This is the DCS node number or machine number of the machine at the far end of this link.

Field 9: This field selects the memory table values to be used. If a dash or ‘‘0’’ is entered, the values given are scratch pad values. If a ‘‘1’’ is entered, the values shown are the machine table (translated) values.

Field 10: This is a display only field. If a ‘‘0’’ is displayed, the scratch pad and machine tables do not agree (changes have been made). If a ‘‘1’’ is displayed, the scratch pad and machine tables agree (no change).

BX.25 Link Characteristics

Except in Field 1, typical values for link level 2 and 3 characteristics are given in the Feature Translations Service Manual for the switch. These typical values are generally used in both Word 2 and Word 3 of Procedure 256. If these should fail to give satisfactory service, problems must be addressed on a case-by-case basis. There are no generally recommended values other than the typical values given.

WORD 2, LEVEL 2 LINK CHARACTERISTICS

WORD 2	1	1	1 0	2	7		1	1	PROC 256
	1	2	3	4	5		6	7	

WORD 3	1	1 8 0	2 0	1 8 0	8	8	-	- -	- -	4	1	1	PROC 256
	1	2	3	4	5	6	7	8	9	10	11	12	

Field 1: This is the link number of the DCIU (external) link being assigned. The range is from one to eight. This should be the same as used in WORD 1. Default values do not apply in this field.

Field 2: This field sets the retransmission timer.

Field 3: This field sets the idle timer.

Field 4: This field sets the maximum number of retransmission attempts that will be made.

Field 5: This field sets the maximum number of unacknowledged frames allowed before retransmission.

Field 6: This field selects the memory table values used. If the value entered is ‘‘0,’’ the displayed values are scratch pad values. If the value entered is ‘‘1,’’ the values shown are machine values.

Field 7: This is a display only field. If a ‘‘0’’ is displayed, the scratch pad and machine table values do not agree. If a ‘‘1’’ is displayed, the scratch pad and machine table values agree.

WORD 3, LEVEL 3 LINK CHARACTERISTICS

Field 1: This is the link number of the DCIU (external) link being assigned. The range is from one to eight. This should be the same as used in WORD 1. This is not a default value.

Field 2: This field sets the BX.25 activity level timer.

Field 3: This field sets the acknowledgment timer, the length of time the DCIU will wait for an acknowledgment for a transmitted message.

Field 4: This field sets the interrupt timer.

Field 5: This field sets the reset timer.

Field 6: This field sets the restart timer.

Field 7: This field shows the retransmission counter.

Field 8: This field shows the reset counter.

Field 9: This field shows the restart counter.

Field 10: This field establishes the maximum number of allowable unacknowledged packets.

Field 11: This field selects the memory table values used. If the value entered is ‘‘0,’’ the displayed values are scratch pad values. If the value entered is ‘‘1,’’ the values shown are machine values.

Field 12: This is a display only field. If a ‘‘0’’ is displayed, the scratch pad and machine table values do not agree. If a ‘‘1’’ is displayed, the scratch pad and machine table values agree.

PROCEDURE 257 — DCIU ADMINISTRATION — DATA PATH CHARACTERISTICS

WORD 1	0	1	1	1	0	0		0	0	PROC 257
	1	2	3	4	5	6		7	8	

WORD 1, NETWORK CHANNELS

Component A

This is the source component for a Network Channel.

Field 1: This is the link identified with Component A.

0 = local switch port
1 through 8 = remote switch.

Field 2: This identifies the logical channel for Component A. If Field 1 is set to ‘‘0,’’ this is a local switch port. These ports have preassigned applications and must be used as assigned in all System 85, Release 2, Version 3 and earlier switches. Port ‘‘1’’ is preassigned for use with Message Center Service on AP number 1. See Table G-A for a list of all applicable port assignments. If Component A is from a distant switch (link 1 through 8), the range for Field 2 is from 1 to 64, unless the other end (Component B) is an Enhanced DIMENSION System (encode 7). If this is the case, the range is 1 to 20. Logical channels on DCIU links are not preassigned.

Component B

This is the destination component for a Network Channel.

Field 3: This is the link identified with Component B.

0 = local switch port
1 through 8 = remote switch.

Field 4: This identifies the logical channel for Component B. If Field 3 is set to ‘‘0,’’ this is a local switch port. These ports have preassigned applications and must be used as assigned in all System 85, Release 2, Version 3 and earlier switches. See Table G-A for a list of applicable port assignments. If Component B is from a distant processor (link 1 through 8), the range for Field 4 depends on the type of the distant processor. For a distant processor that is an AP 16, the range is from 1 to 11. The ranges applicable to different types of processors are given in the Features Translation Service Manual. Logical channels on DCIU links are not preassigned.

Field 5: This field sets the priority of the network channel being established. A ‘‘0’’ sets up low priority, and a ‘‘1’’ sets up high priority. In the event of network channel contention, all high priority network channel messages will be served before low priority messages are served.

Field 6: This field sets the alternate routing flag. A ‘‘0’’ sets up fixed (Permanent Virtual Circuit) routing. This type of routing requires that Component B be identified in Fields 3 and 4. A ‘‘1’’ establishes this as an Alternate Routing network channel. This type of routing requires that Component B is unspecified (dashed) in Fields 3 and 4.

Field 7: This field selects the memory table used. If the value entered is ‘‘0,’’ the displayed values are scratch pad values. If the value entered is ‘‘1,’’ the values are machine values.

Field 8: This is a display only field. If a ‘‘0’’ is displayed, the scratch pad and machine table values do not agree. If a ‘‘1’’ is displayed, the scratch pad and machine table values agree.

WORD 2, PORT CHARACTERISTICS

WORD 2	1	2	3	4		5	6	7	8	9	PROC 257
	1	**1**	**- - -**	**- - -**		**-**	**0**	**0**	**0**	**1**	

Field 1: This field identifies the number of the local (switch) port.

Field 2: This field shows the port number on the remote processor. The range of possible remote port numbers depends on the type of remote processor (i.e., the range of possibilities for an AP 16 is from 1 to 11). The applicable ranges for different types of remote processors are given in the Feature Translations Service Manual.

Field 3: This field identifies the destination routing code for an alternate routing network channel. If this is not an alternate routing network channel, this field is dashed.

Field 4: This field assigns the postage value for alternate routing network channels. If this is not an alternate network channel, this field is dashed.

Field 5: This is a display only field. A value of ‘‘0’’ shows that the port is not assigned to a network channel. A value of ‘‘1’’ shows that the port is assigned to a network channel.

Field 6: This is a display only field. This field shows the assigned priority of the network channel. A ‘‘0’’ shows low priority, and a ‘‘1’’ shows a high priority channel.

Field 7: This is a display only field. A ‘‘0’’ shows this is not an alternate routing network channel port, and a ‘‘1’’ shows alternate routing is assigned.

Field 8: This field selects the memory table values used. If the value entered is dash or ‘‘0,’’ the displayed values are scratch pad values. If the value entered is ‘‘1,’’ the values shown are machine values.

Field 9: This is a display only field. If a ‘‘0’’ is displayed, the scratch pad and machine table values do not agree. If a ‘‘1’’ is displayed, the scratch pad and machine table values agree.

WORD 3, TRUNK GROUP AND DCS NODE ASSIGNMENT

AND

WORD 4, ALTERNATE ROUTING

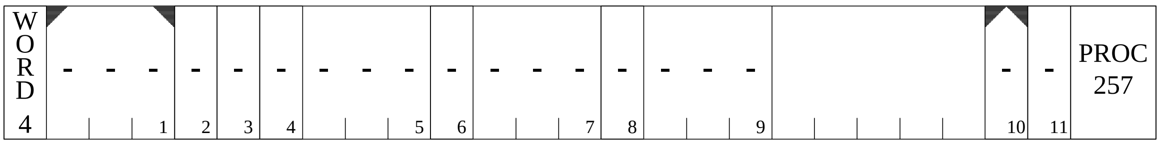

Words 3 and 4 of Procedure 257 apply to DCS link connections only and are not used for AP administration.

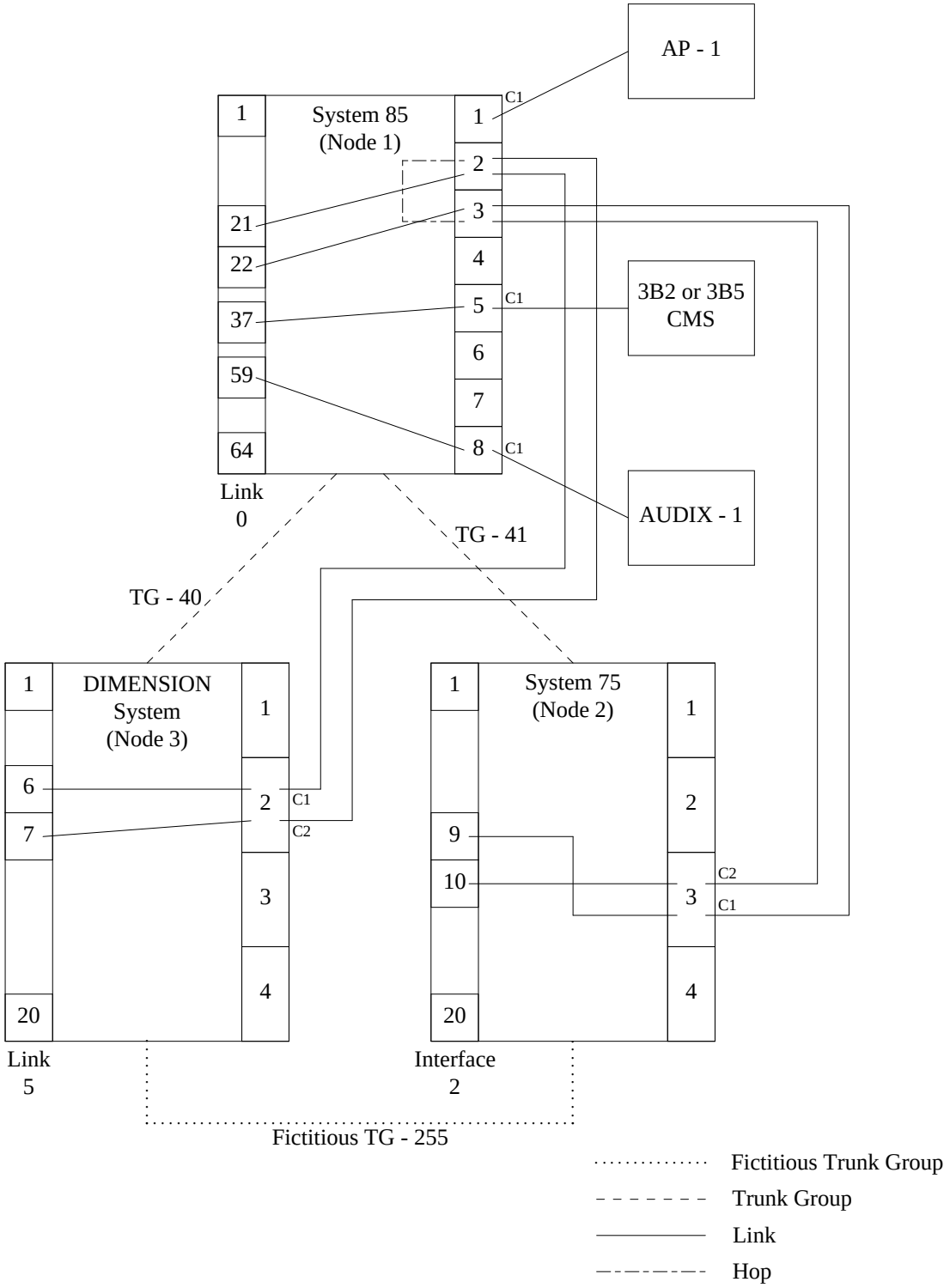
AP - 1
System 85
(Node 1)
1
21
22
37
59
64
1
2
3
4
5
6
7
8
C1
C1
C1
3B2 or 3B5
CMS
AUDIX - 1
Link
0
TG - 41
TG - 40
DIMENSION
System
(Node 3)
1
6
7
20
1
2
3
4
C1
C2
System 75
(Node 2)
1
9
10
20
1
2
3
4
C2
C1
Link
5
Interface
2
Fictitious TG - 255
Fictitious Trunk Group
Trunk Group
Link
Hop

ADMINISTERING THE AUDIX ADJUNCT LINK

PROCEDURE 256 — DCIU ADMINISTRATION — LINK CHARACTERISTICS

WORD 1	8	1	6	0	0	1	3	1			0	0	PROC 256
	1	2	3	4	5	6	7	8			9	10	

WORD 1, LINK ASSIGNMENT

Field 1: This is the link number of the DCIU (external) link being assigned. The range is from one to eight.

Field 2: This field shows if the link has been assigned or not. A ‘‘1’’ means that the link is assigned, a ‘‘2’’ shows the link is unassigned.

Field 3: This sets the *Baud Rate* or data transmission rate for this link. For the AUDIX Adjunct link, the baud rate should be set to ‘‘6’’ (9600 bps).

Field 4: This field identifies the transmission characteristics of the local end of the link as either DTE (Data Terminal Equipment) with encode ‘‘0,’’ or DCE (Data Communications Equipment) with encode ‘‘1.’’ In most cases, it doesn’t matter which end of a DCIU link is DTE and which end is DCE, however, the two ends of any DCIU link must not match. That is, one end must be DTE and the other end must be DCE.

Field 5: This field identifies the link as being fixed or no dial up (encode 0), or dial up (encode 1). For most DCIU link applications, this will be fixed (encode 0).

Field 6: This field identifies the protocol to be used on the link. For DCIU applications, this is always set to ‘‘1’’ for the BX.25 protocol.

Field 7: This field identifies the type of machine that is located at the far end of the data path being set up. For direct linkage connections this is also the far end of the specific link. For an AUDIX Adjunct, the appropriate encode is ‘‘3.’’ Encodes are listed in the Feature Translations Manual.

Field 8: This is the number of the processor at the far end of this link. In this case, it is AUDIX Adjunct number 1.

Field 9: This field selects the memory table value used. If a dash or ‘‘0’’ is entered, the values shown are scratch pad values. If ‘‘1’’ is entered, the values shown are the machine table (translated) values.

Field 10: This is a display only field. If a ‘‘0’’ is displayed, the scratch pad and machine tables do not agree (changes have been made). If a ‘‘1’’ is displayed, the scratch pad and machine tables agree (no change).

BX.25 Link Characteristics

Except in Field 1, typical values for link level 2 and 3 characteristics are given in the Feature Translations Service Manual for the switch. These typical values are generally used in both Word 2 and Word 3 of Procedure 256. If these values should fail to give satisfactory service, problems must be addressed on a case-by-case basis. There are no generally recommended values other than the typical values given.

WORD 2, LEVEL 2 LINK CHARACTERISTICS

WORD 2	8	1	10	2	7		1	1	PROC 256
	1	2	3	4	5		6	7	

WORD 3	8	180	20	180	8	8	-	- -	- -	4	1	1	PROC 256
	1	2	3	4	5	6	7	8	9	10	11	12	

Field 1: This is the link number of the DCIU (external) link being assigned. The range is from one to eight. This should be the same as used in WORD 1. Typical values do not apply in this field.

Field 2: This field sets the retransmission timer.

Field 3: This field sets the idle timer.

Field 4: This field sets the maximum number of retransmission attempts that will be made.

Field 5: This field sets the maximum number of unacknowledged frames allowed before retransmission.

Field 6: This field selects the memory table values used. If the value entered is ‘‘0’’ or dash, the values are scratch pad values. If the value entered is ‘‘1,’’ the values are machine values.

Field 7: This is a display only field. If a ‘‘0’’ is shown, the scratch pad and machine table values do not agree. If a ‘‘1’’ is shown, the scratch pad and machine table values agree.

WORD 3, LEVEL 3 LINK CHARACTERISTICS

Field 1: This is the link number of the DCIU (external) link being assigned. The range is from one to eight. This should be the same as used in WORD 1. This is a specific link associated with each application and not a typical value.

Field 2: This field sets the BX.25 activity level timer.

Field 3: This field sets the acknowledgment timer, the length of time the DCIU will wait for an acknowledgment for a transmitted message.

Field 4: This field sets the interrupt timer.

Field 5: This field sets the reset timer.

Field 6: This field sets the restart timer.

Field 7: This field shows the retransmission counter.

Field 8: This field shows the reset counter.

Field 9: This field shows the restart counter.

Field 10: This field establishes the maximum number of allowable unacknowledged packets.

Field 11: This field selects the memory table values used. If the value entered is ‘‘0’’ or ‘‘-,’’ the values are scratch pad values. If the value entered is ‘‘1,’’ the values are machine values.

Field 12: This is a display only field. If a ‘‘0’’ is displayed, the scratch pad and machine table values do not agree. If a ‘‘1’’ is displayed, the scratch pad and machine table values agree.

PROCEDURE 257 — DCIU ADMINISTRATION — DATA PATH CHARACTERISTICS

WORD 1	0	5 9	8	1	0	0		0	0	PROC 257
	1	2	3	4	5	6		7	8	

WORD 1, NETWORK CHANNELS

Component A

This is the source component for a Network Channel.

Field 1: This is the link identified with Component A.

0 = local switch port
1 through 8 = remote switch.

Field 2: This identifies the logical channel for Component A. When Field 1 is set to ‘‘0,’’ this is a local switch port. These ports have preassigned applications and must be used as assigned in all System 85, Release 2, Version 3 and earlier switches. Port ‘‘59’’ is preassigned for use with AUDIX Adjunct number 1. See Table G-A for a list of all applicable port assignments.

Component B

This is the destination component for a Network Channel.

Field 3: This is the link identified with Component B.

0 = local switch port
1 through 8 = remote switch.

Field 4: This identifies the logical channel for Component B. If Field 1 is set to ‘‘0,’’ this is a local switch port. These ports have preassigned applications and must be used as assigned in all System 85, Release 2, Version 3 and earlier switches. See Table G-A for a list of all applicable port assignments.

Field 5: This field sets the priority of the network channel being established. A ‘‘0’’ sets up low priority, and a ‘‘1’’ sets up high priority. In the event of network channel contention, all high priority network channel messages will be served before low priority messages are served.

Field 6: This field sets the alternate routing flag. A ‘‘0’’ sets up fixed (Permanent Virtual Circuit) routing. This type of routing requires that Component B be identified in Fields 3 and 4. A ‘‘1’’ establishes this as an Alternate Routing network channel. This type of routing requires that Component B is unspecified (dashed) in Fields 3 and 4.

Field 7: This field selects the memory table values used. If the value entered is ‘‘0,’’ the values are scratch pad values. If the valued entered is ‘‘1,’’ the values are machine values.

Field 8: This is a display only field. If a ‘‘0’’ is displayed, the scratch pad and machine table values do not agree. If a ‘‘1’’ is displayed, the scratch pad and machine table values agree.

WORD 2, PORT CHARACTERISTICS

WORD 2	1	2	3	4		5	6	7	8	9	PROC 257
	5 9	1	- - -	- - -		1	0	0	0	0	

Field 1: This field identifies the number of the local (switch) port.

Field 2: This field shows the port number on the remote processor. The range of possible remote port numbers depends on the type of remote processor (i.e., the range of possibilities for an AUDIX Adjunct is from 1 to 10). The applicable ranges for different types of remote processors are given in the Feature Translations Service Manual.

Field 3: This field identifies the destination routing code for an alternate routing network channel. If this is not an alternate routing network channel, this field is dashed.

Field 4: This field assigns the postage value for alternate routing network channels. If this is not an alternate network channel, this field is dashed.

Field 5: This is a display only field. A value of ‘‘0’’ shows that the port is not assigned to a network channel. A value of ‘‘1’’ shows that the port is assigned to a network channel.

Field 6: This is a display only field. This field shows the assigned priority of the network channel. A ‘‘0’’ shows low priority, and a ‘‘1’’ shows a high priority channel.

Field 7: This is a display only field. A ‘‘0’’ shows this is not an alternate routing network channel port, and a ‘‘1’’ shows alternate routing is assigned.

Field 8: This field selects the memory table values used. A ‘‘0’’ displays scratch pad values and a ‘‘1’’ displays machine values.

Field 9: This is a display only field. If a ‘‘0’’ is displayed, the scratch pad and machine table values do not agree (a change is being made). If a ‘‘1’’ is displayed, the scratch pad and machine table values agree (no change).

WORD 3, TRUNK GROUP & DCS NODE ASSIGNMENT

AND

WORD 4, ALTERNATE ROUTING

WORD 3	1	2	3		4	5	PROC 257
	- - -	- - -	- - -		-	-	

WORD 4	1	2	3	4	5	6	7	8	9		10	11	PROC 257
	- - -	-	-	-	- - -	-	- - -	-	- - -		-	-	

Words 3 and 4 of Procedure 257 apply to DCS link connections only and are not used for AUDIX administration.

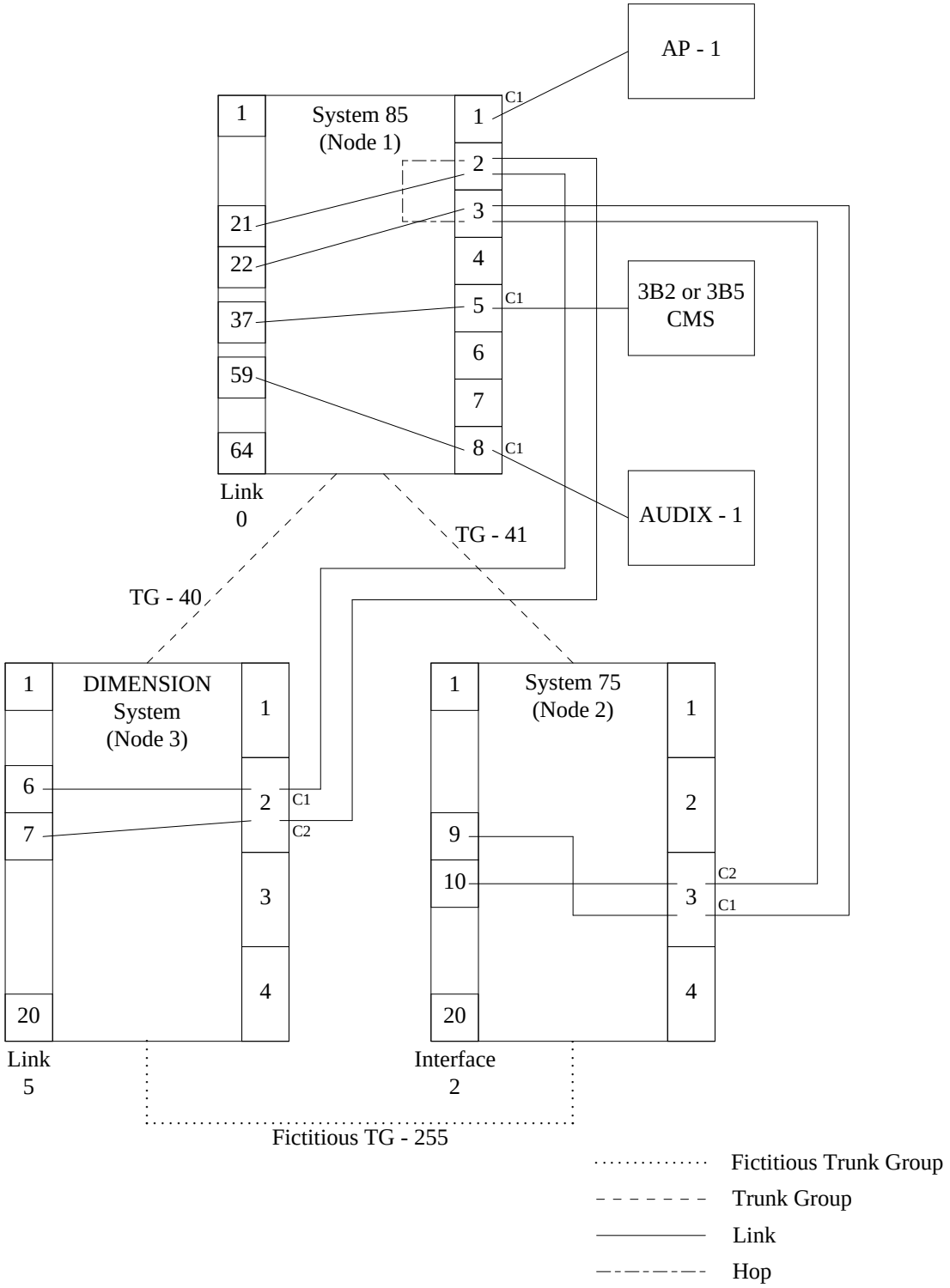
AP - 1
System 85
(Node 1)
1
21
22
37
59
64
1
2
3
4
5
6
7
8
C1
C1
C1
3B2 or 3B5
CMS
AUDIX - 1
Link
0
TG - 41
TG - 40
DIMENSION
System
(Node 3)
1
6
7
20
1
2
3
4
C1
C2
System 75
(Node 2)
1
9
10
20
1
2
3
4
C2
C1
Link
5
Interface
2
Fictitious TG - 255
Fictitious Trunk Group
Trunk Group
Link
Hop

ADMINISTERING THE DCIU LINK TO AN ENHANCED ‘‘DIMENSION’’ SYSTEM

PROCEDURE 256 — DCIU ADMINISTRATION — LINK CHARACTERISTICS

WORD 1	2	1	6	0	0	1	7	3			0	0	PROC 256
	1	2	3	4	5	6	7	8			9	10	

WORD 1, LINK ASSIGNMENT

Field 1: This is the link number of the DCIU (external) link being assigned. The range is from one to eight.

Field 2: This field shows if the link has been assigned or not. A ‘‘1’’ means that the link is assigned, a ‘‘2’’ shows the link is unassigned.

Field 3: This sets the *Baud Rate* or data transmission rate for this link. For DCS applications, the baud rate should be set to ‘‘6’’ (9600 bps).

Field 4: This field identifies the transmission characteristics of the local end of the link as either DTE (Data Terminal Equipment) with encode ‘‘0,’’ or DCE (Data Communications Equipment) with encode ‘‘1.’’ In most cases, it doesn’t matter which end of a DCIU link is DTE and which end is DCE. However, the two ends of any DCIU link must not match. That is, one end must be DTE and the other end must be DCE.

Field 5: This field identifies the link as being fixed or no dial up (encode 0), or dial up (encode 1). For most DCIU link application, this will be fixed (encode 0).

Field 6: This field identifies the protocol to be used on the link. For DCS applications, this is always set to ‘‘1’’ for the BX.25 protocol.

Field 7: This field identifies the type of machine that is located at the distant end of the data path being set up. For direct linkage connections, this is also the far end of the specific link. For an Enhanced DIMENSION System switch, the appropriate encode is ‘‘7.’’ Encodes are listed in the Feature Translations Manual for the switch being administered.

Field 8: This is the DCS node number of the machine at the distant end of this link.

Field 9: This field selects the memory table values used. If a ‘‘-’’ or ‘‘0’’ is entered, the values are scratch pad values. If a ‘‘1’’ is entered, the machine table (translated) values are used.

Field 10: This is a display only field. If a ‘‘0’’ is displayed, the scratch pad and machine tables do not agree (changes have been made). If a ‘‘1’’ is displayed, the scratch pad and machine tables agree (no change).

BX.25 Link Characteristics

Except in Field 1, typical values for link level 2 and 3 characteristics are given in the Feature Translations Service Manual for the switch. These typical values are generally used in both Word 2 and Word 3 of Procedure 256. If these should fail to give satisfactory service, problems must be addressed on a case-by-case basis. There are no generally recommended values other than the typical values given.

WORD 2	1	2	3	4	5		6	7	PROC 256
	2	1	10	2	7		1	1	

WORD 3	1	2	3	4	5	6	7	8	9	10	11	12	PROC 256
	2	180	20	180	8	8	-	- -	- -	4	1	1	

WORD 2, LEVEL 2 LINK CHARACTERISTICS

Field 1: This is the link number of the DCIU (external) link being assigned. The range is from one to eight. This should be the same as used in WORD 1. Default values do not apply in this field.

Field 2: This field sets the retransmission timer.

Field 3: This field sets the idle timer.

Field 4: This field sets the maximum number of retransmission attempts that will be made.

Field 5: This field sets the maximum number of unacknowledged frames allowed before retransmission.

Field 6: This field selects the memory table values used. If the value entered is ‘‘0,’’ the values are scratch pad values. If the value entered is ‘‘1,’’ the values are machine values.

Field 7: This is a display only field. If a ‘‘0’’ is displayed, the scratch pad and machine table values do not agree. If a ‘‘1’’ is displayed, the scratch pad and machine table values agree.

WORD 3, LEVEL 3 LINK CHARACTERISTICS

Field 1: This is the link number of the DCIU (external) link being assigned. The range is from one to eight. This should be the same as used in WORD 1. This is not a default value.

Field 2: This field sets the BX.25 activity level timer.

Field 3: This field sets the acknowledgment timer, the length of time the DCIU will wait for an acknowledgment for a transmitted message.

Field 4: This field sets the interrupt timer.

Field 5: This field sets the reset timer.

Field 6: This field sets the restart timer.

Field 7: This field shows the retransmission counter.

Field 8: This field shows the reset counter.

Field 9: This field shows the restart counter.

Field 10: This field establishes the maximum number of allowable unacknowledged packets.

Field 11: This field selects the memory table values used. If a ‘‘0’’ is entered, scratch pad values are used. If a ‘‘1’’ is entered, machine values are used.

Field 12: This is a display only field. If a ‘‘0’’ is displayed, the scratch pad and machine table values do not agree. If a ‘‘1’’ is displayed, the scratch pad and machine table values agree.

PROCEDURE 257 — DCIU ADMINISTRATION — DATA PATH CHARACTERISTICS

WORD 1	0	2 1	2	1	1	0		0	0	PROC 257
	1	2	3	4	5	6		7	8	

WORD 1, NETWORK CHANNELS

Component A

This is the source component for a Network Channel.

Field 1: This is the link identified with Component A.

0 = local switch port
1 through 8 = remote switch.

Field 2: This identifies the logical channel for Component A. If Field 1 is set to ‘‘0,’’ this is a local switch port. These ports have preassigned applications and must be used as assigned in all System 85, Release 2, Version 3 and earlier switches. Port ‘‘21’’ is one of the ports that can be used for DCS applications. See Table G-A for a list of all applicable port assignments.

Component B

This is the destination component for a Network Channel.

Field 3: This is the link identified with Component B.

0 = local switch port
1 through 8 = remote switch.

Field 4: This identifies the logical channel for Component B. If Component B is from a distant switch, the range for Field 4 depends on the type switch. For a System 85, Release 2 switch the range is 1 to 64. If the distant switch is an Enhanced DIMENSION System (encode 7) or a System 75 (encode 4), the range is 1 to 20. Logical channels on DCIU links are not preassigned.

Field 5: This field sets the priority of the network channel being established. A ‘‘0’’ sets low priority, and a ‘‘1’’ sets high priority. In the event of network channel contention, all high priority network channel messages will be served before low priority messages are served.

Field 6: This field sets the alternate routing flag. A ‘‘0’’ sets fixed (Permanent Virtual Circuit) routing. This type of routing requires that Component B be identified in Fields 3 and 4. A ‘‘1’’ sets this as an Alternate Routing network channel. This type of routing requires that Component B is unspecified (dashed) in Fields 3 and 4.

Field 7: This field selects the memory table values used. If the value entered is ‘‘0,’’ the values are scratch pad values. If a ‘‘1’’ is entered, machine values are used.

Field 8: This is a display only field. If a ‘‘0’’ is displayed, the scratch pad and machine table values do not agree. If a ‘‘1’’ is displayed, the scratch pad and machine table values agree.

WORD 2, PORT CHARACTERISTICS

WORD 2	1	2	3	4		5	6	7	8	9	
	21	6	- - -	- - -		1	1	0	0	0	PROC 257

Field 1: This field identifies the number of the local (switch) port.

Field 2: This field shows the port number on the remote processor. The range of possible remote port numbers depends on the type of remote processor (i.e., the range of possibilities for an Enhanced DIMENSION System switch is from 1 to 20). The applicable ranges for different types of remote processors are given in the Feature Translations Service Manual (555-103-107).

Field 3: This field identifies the destination routing code for an alternate routing network channel. If this is not an alternate routing network channel, this field is dashed.

Field 4: This field assigns the postage value for alternate routing network channels. If this is not an alternate network channel, this field is dashed.

Field 5: This is a display only field. A value of ‘‘0’’ shows that the port is not assigned to a network channel. A value of ‘‘1’’ shows that the port is assigned to a network channel.

Field 6: This is a display only field. This field shows the assigned priority of the network channel. A ‘‘0’’ shows low priority, and a ‘‘1’’ shows a high priority channel.

Field 7: This is a display only field. A ‘‘0’’ shows this is not an alternate routing network channel port, and a ‘‘1’’ shows alternate routing is assigned.

Field 8: This field selects the memory table values used. If the value entered is ‘‘0,’’ the values are scratch pad values. If a ‘‘1’’ is entered, the values are machine values.

Field 9: This is a display only field. If a ‘‘0’’ is displayed, the scratch pad and machine table values do not agree. If a ‘‘1’’ is displayed, the scratch pad and machine table values agree.

WORD 3, TRUNK GROUP & DCS NODE ASSIGNMENT

WORD 3	1	2	3	4	5	
	21	40	3	0	0	PROC 257

Field 1: This field is used to designate the number of the local (switch) port being associated with a trunk group and DCS remote node.

Field 2: This field identifies the trunk group (first choice) associated with traffic from the local switch to a specific DCS remote node.

Field 3: This is the number of the DCS remote node associated with traffic served by the port in Field 1 and the trunk group in Field 2.

Field 4: This is a display only field. If the value displayed is ‘‘0,’’ the displayed values are scratch pad values. If the display shows ‘‘1,’’ the values shown are machine values.

Field 5: This is a display only field. If a ‘‘0’’ is displayed, the scratch pad and machine table values do not agree. If a ‘‘1’’ is displayed, the scratch pad and machine table values agree.

WORD 4, ALTERNATE ROUTING

WORD 4	- - -	-	-	-	- - -	-	- - -	-	- - -	-	-	PROC 257
	1	2	3	4	5	6	7	8	9	10	11	

Word 4 of Procedure 257 is only used for Alternate Routing. The example given does not use alternate routing; therefore Word 4 does not apply. The following field identifications are provided for information only, not as an example.

Field 1: This field is used to designate a specific destination routing code for use with alternate routing.

Field 2: This field is used to designate the routing algorithm to be used. For System 85, R2 V3 and earlier systems, only one alternate routing algorithm is available, routing on failure (encode 1). Fixed routing (encode 2) can be used when only one path is possible.

Field 3: This field identifies the number of routes available from the local node to the destination. For a fixed routing (encode 0, in Field 2) this will be ‘‘1.’’ A ‘‘0’’ indicates no routes available, and fields 4 through 9 must be dashed.

ROUTE 1 This is the first-choice route for the destination routing code and will be attempted first.

Field 4: This is the link number for the first-choice route.

Field 5: This is the logical channel number for the first-choice route.

ROUTE 2 This is the second-choice route for the destination routing code and will be attempted if the first-choice route fails.

Field 6: This is the link number for the second-choice route.

Field 7: This is the logical channel number for the second-choice route.

ROUTE 3 This is the third- and last-choice route for the destination routing code and will be attempted only if the first- and second-choice routes both fail.

Field 8: This is the link number for the third-choice route.

Field 9: This is the logical channel number for the third-choice route.

Field 10: This field selects the memory table values used. If the value entered is ‘‘0,’’ the values are scratch pad values. If a ‘‘1’’ is entered, the values are machine values.

Field 11: This is a display only field. If a ‘‘0’’ is displayed, the scratch pad and machine table values do not agree. If a ‘‘1’’ is displayed, the scratch pad and machine table values agree.

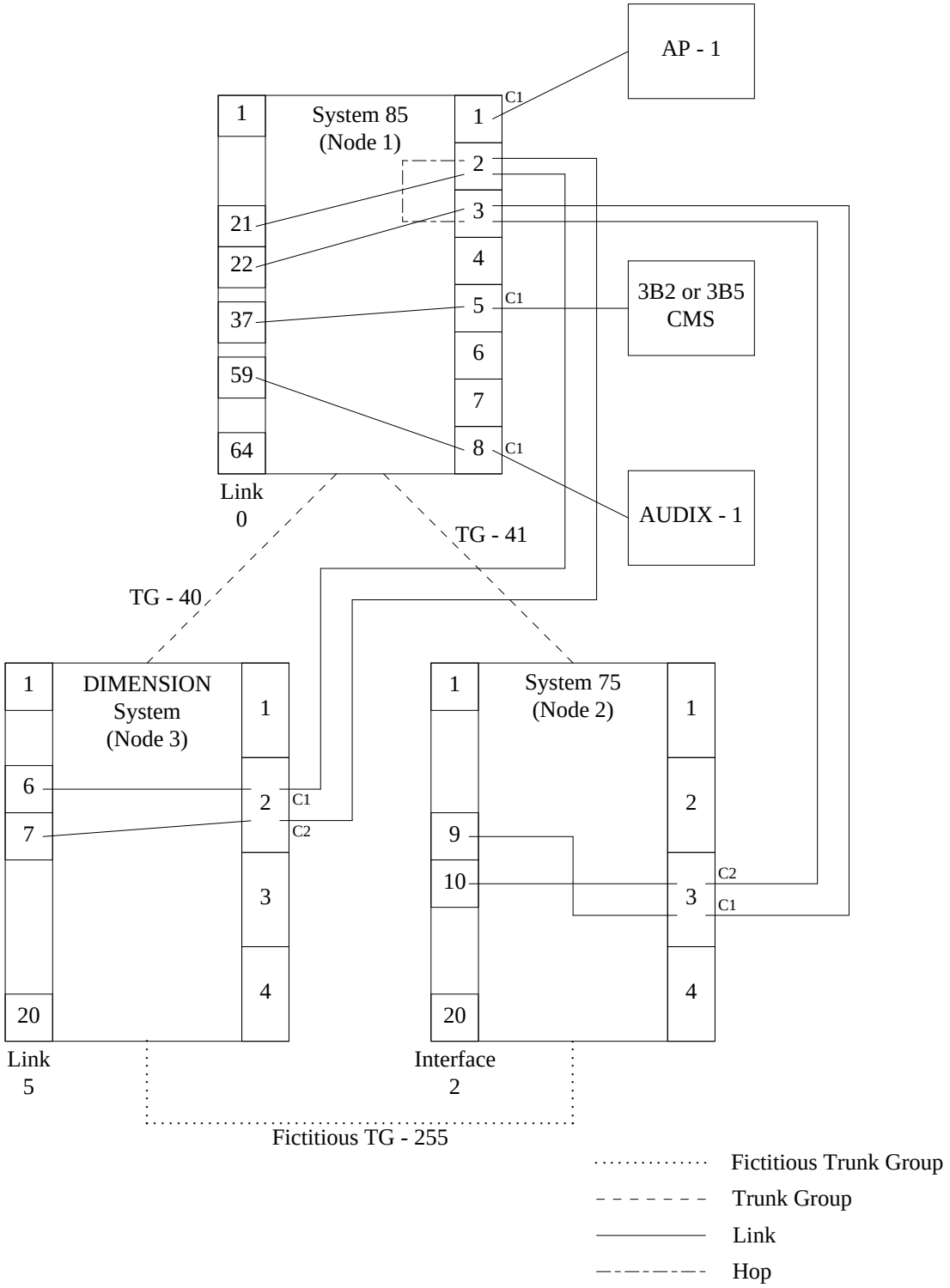
AP - 1
System 85
(Node 1)
1
21
22
37
59
64
1
2
3
4
5
6
7
8
C1
C1
C1
3B2 or 3B5
CMS
AUDIX - 1
Link
0
TG - 41
TG - 40
DIMENSION
System
(Node 3)
1
6
7
2
3
4
20
C1
C2
System 75
(Node 2)
1
9
10
2
3
4
20
C2
C1
Link
5
Interface
2
Fictitious TG - 255
Fictitious Trunk Group
Trunk Group
Link
Hop

ADMINISTERING THE DCIU LINK TO A SYSTEM 75 SWITCH

PROCEDURE 256 — DCIU ADMINISTRATION — LINK CHARACTERISTICS

WORD 1	3	1	6	0	0	1	4	2			0	0	PROC 256
	1	2	3	4	5	6	7	8			9	10	

WORD 1, LINK ASSIGNMENT

Field 1: This is the link number of the DCIU (external) link being assigned. The range is from one to eight.

Field 2: This field shows if the link has been assigned or not. A ‘‘1’’ means that the link is assigned, a ‘‘2’’ shows the link is unassigned.

Field 3: This sets the *Baud Rate* or data transmission rate for this link. For DCS applications, the baud rate should be set to ‘‘6’’ (9600 bps).

Field 4: This field identifies the transmission characteristics of the local end of the link as either DTE (Data Terminal Equipment) with encode ‘‘0,’’ or DCE (Data Communications Equipment) with encode ‘‘1.’’ In most cases, it doesn’t matter which end of a DCIU link is DTE and which end is DCE. However, the two ends of any DCIU link must not match. That is, one end must be DTE and the other end must be DCE.

Field 5: This field identifies the link as being fixed or no dial up (encode 0), or dial up (encode 1). For most DCIU link application, this will be fixed (encode 0).

Field 6: This field identifies the protocol to be used on the link. For DCS applications this is always set to ‘‘1’’ for the BX.25 protocol.

Field 7: This field identifies the type of machine that is located at the distant end of the data path being set up. For direct linkage connections this is also the far end of the specific link. For a System 75 switch, the appropriate encode is ‘‘4.’’ Encodes are listed in the Feature Translations Manual for the switch being administered.

Field 8: This is the DCS node number of the machine at the distant end of this link.

Field 9: This field selects the memory table values used. If a dash or ‘‘0’’ is entered, the values are scratch pad values. If a ‘‘1’’ is entered, the values are the machine table (translated) values.

Field 10: This is a display only field. If a ‘‘0’’ is displayed, the scratch pad and machine tables do not agree (changes have been made). If a ‘‘1’’ is displayed, the scratch pad and machine tables agree (no change).

BX.25 Link Characteristics

Except in Field 1, typical values for link level 2 and 3 characteristics are given in the Feature Translations Service Manual (555-103-107) for the switch. These typical values are generally used in both Word 2 and Word 3 of Procedure 256. If these should fail to give satisfactory service, problems must be addressed on a case-by-case basis. There are no generally recommended values other than the typical values given.

WORD 2	2	1	10	27			11	PROC 256
	1	2	3	4	5	6	7	

WORD 3	2	180	20	180	8	8	-	- -	- -	4	1	1	PROC 256
	1	2	3	4	5	6	7	8	9	10	11	12	

WORD 2, LEVEL 2 LINK CHARACTERISTICS

Field 1: This is the link number of the DCIU (external) link being assigned. The range is from one to eight. This should be the same as used in WORD 1. Default values do not apply in this field.

Field 2: This field sets the retransmission timer.

Field 3: This field sets the idle timer.

Field 4: This field sets the maximum number of retransmission attempts that will be made.

Field 5: This field sets the maximum number of unacknowledged frames allowed before retransmission.

Field 6: This field selects the memory table values used. If the value entered is ‘‘0,’’ the values are scratch pad values. If a ‘‘1’’ is entered, machine values are used.

Field 7: This is a display only field. If a ‘‘0’’ is displayed, the scratch pad and machine table values do not agree. If a ‘‘1’’ is displayed, the scratch pad and machine table values agree.

WORD 3, LEVEL 3 LINK CHARACTERISTICS

Field 1: This is the link number of the DCIU (external) link being assigned. The range is from one to eight. This should be the same as used in WORD 1. This is not a default value.

Field 2: This field sets the BX.25 activity level timer.

Field 3: This field sets the acknowledgment timer, the length of time the DCIU will wait for an acknowledgment for a transmitted message.

Field 4: This field sets the interrupt timer.

Field 5: This field sets the reset timer.

Field 6: This field sets the restart timer.

Field 7: This field shows the retransmission counter.

Field 8: This field shows the reset counter.

Field 9: This field shows the restart counter.

Field 10: This field establishes the maximum number of allowable unacknowledged packets.

Field 11: This field selects the memory table values used. If the value entered is ‘‘0,’’ the values are scratch pad values. If the value entered is ‘‘1,’’ the values are machine values.

Field 12: This is a display only field. If a ‘‘0’’ is displayed, the scratch pad and machine table values do not agree. If a ‘‘1’’ is displayed, the scratch pad and machine table values agree.

PROCEDURE 257 — DCIU ADMINISTRATION — DATA PATH CHARACTERISTICS

WORD 1	0	22	2	1	1	0		0	0	PROC 257
	1	2	3	4	5	6		7	8	

WORD 1, NETWORK CHANNELS

Component A

This is the source component for a Network Channel.

Field 1: This is the link identified with Component A.

0 = local switch port
1 through 8 = remote switch.

Field 2: This identifies the logical channel for Component A. When Field 1 is ‘‘0,’’ this is a local switch port. These ports have preassigned applications and must be used as assigned in all System 85, Release 2, Version 3 and earlier switches. Port ‘‘22’’ is one of ports that can be used for DCS applications. See Table G-A for a list of all applicable port assignments.

Component B

This is the destination component for a Network Channel.

Field 3: This is the link identified with Component B.

0 = local switch port
1 through 8 = remote switch.

Field 4: This identifies the logical channel for Component B. When Component B is from a distant switch, the range for Field 4 depends on the type of switch. For a System 85, the range is from 1 to 64. For an Enhanced DIMENSION System (encode 7), the range is from 1 to 20. Logical channels on DCIU links do not have preassigned functions.

Field 5: This field sets the priority of the network channel being established. A ‘‘0’’ sets up low priority, and a ‘‘1’’ sets up high priority. In the event of network channel contention, all high priority network channel messages will be served before low priority messages are served.

Field 6: This field sets the alternate routing flag. A ‘‘0’’ establishes fixed (Permanent Virtual Circuit) routing. This type of routing requires that Component B be identified in Fields 3 and 4. A ‘‘1’’ establishes this as an Alternate Routing network channel. This type of routing requires that Component B is unspecified (dashed) in Fields 3 and 4.

Field 7: This field selects the memory table values used. If the value entered is ‘‘0,’’ the values are scratch pad values. If a ‘‘1’’ is entered, the values are machine values.

Field 8: This is a display only field. If a ‘‘0’’ is displayed, the scratch pad and machine table values do not agree. If a ‘‘1’’ is displayed, the scratch pad and machine table values agree.

WORD 2, PORT CHARACTERISTICS

WORD 2	1	2	3	4	5	6	7	8	9	
	22	9	- - -	- - -	1	1	0	0	0	PROC 257

Field 1: This field identifies the number of the local (switch) port.

Field 2: This field shows the port number on the remote processor. The range of possible remote port numbers depends on the type of remote processor (i.e., the range of possibilities for an Enhanced DIMENSION switch is from 1 to 20). The applicable ranges for different types of remote processors are given in the Feature Translations Service Manual (555-103-107).

Field 3: This field identifies the destination routing code for an alternate routing network channel. If this is not an alternate routing network channel, this field is dashed.

Field 4: This field assigns the postage value for alternate routing network channels. If this is not an alternate network channel, this field is dashed.

Field 5: This is a display only field. A value of ‘‘0’’ shows that the port is not assigned to a network channel. A value of ‘‘1’’ shows that the port is assigned to a network channel.

Field 6: This is a display only field. This field shows the assigned priority of the network channel. A ‘‘0’’ shows low priority, and a ‘‘1’’ shows a high priority channel.

Field 7: This is a display only field. A ‘‘0’’ shows this is not an alternate routing network channel port, and a ‘‘1’’ shows alternate routing is assigned.

Field 8: This field selects the memory table values used. If the value entered is ‘‘0,’’ the values are scratch pad values. If the value entered is ‘‘1,’’ the values are machine values.

Field 9: This is a display only field. If a ‘‘0’’ is displayed, the scratch pad and machine table values do not agree. If a ‘‘1’’ is displayed, the scratch pad and machine table values agree.

WORD 3, TRUNK GROUP & DCS NODE ASSIGNMENT

WORD 3	1	2	3	4	5	
	22	41	2	0	0	PROC 257

Field 1: This field is used to designate the number of the local (switch) port being associated with a trunk group and DCS remote node.

Field 2: This field identifies the trunk group (first choice) associated with traffic from the local switch to a specific DCS remote node.

Field 3: This is the number of the DCS remote node associated with traffic served by the port in Field 1 and the trunk group in Field 2.

Field 4: This field selects the memory table values used. If a ‘‘0’’ is entered, scratch pad values are used. If a ‘‘1’’ is entered, machine values are used.

Field 5: This is a display only field. If a ‘‘0’’ is displayed, the scratch pad and machine table values do not agree. If a ‘‘1’’ is displayed, the scratch pad and machine table values agree.

WORD 4, ALTERNATE ROUTING

WORD 4	- - -	-	-	-	- - -	-	- - -	-	- - -	-	-	PROC 257
	1	2	3	4	5	6	7	8	9	10	11	

Word 4 of Procedure 257 is only used for Alternate Routing. The example given does not use alternate routing, therefore Word 4 does not apply. The following field identifications are provided for information only, not as an example.

Field 1: This field is used to designate a specific destination routing code for use with alternate routing.

Field 2: This field is used to designate the routing algorithm to be used. For System 85, R2 V3 and earlier switches, only one alternate routing algorithm is available, routing on failure (encode 1). Fixed routing (encode 2) can be used if only one path is possible, or for the final network channel in an alternate routing data path (destination code identifies the local switch).

Field 3: This field identifies the number of routes available from the local node to the destination. For a fixed routing (encode 0, in Field 2) this will be ‘‘1.’’ A ‘‘0’’ indicates no routes available, and fields 4 through 9 must be dashed.

ROUTE 1 This is the first-choice route for the destination routing code and will be attempted first.

Field 4: This is the link number for the first-choice route.

Field 5: This is the logical channel number for the first-choice route.

ROUTE 2 This is the second-choice route for the destination routing code and will be attempted if the first-choice route fails.

Field 6: This is the link number for the second-choice route.

Field 7: This is the logical channel number for the second-choice route.

ROUTE 3 This is the third- and last-choice route for the destination routing code and will be attempted only if the first- and second-choice routes both fail.

Field 8: This is the link number for the third-choice route.

Field 9: This is the logical channel number for the third-choice route.

Field 10: This field selects the memory table values used. If the value is ‘‘0,’’ scratch pad values are used. If the field is ‘‘1,’’ machine values are used.

Field 11: This is a display only field. If a ‘‘0’’ is displayed, the scratch pad and machine table values do not agree. If a ‘‘1’’ is displayed, the scratch pad and machine table values agree.

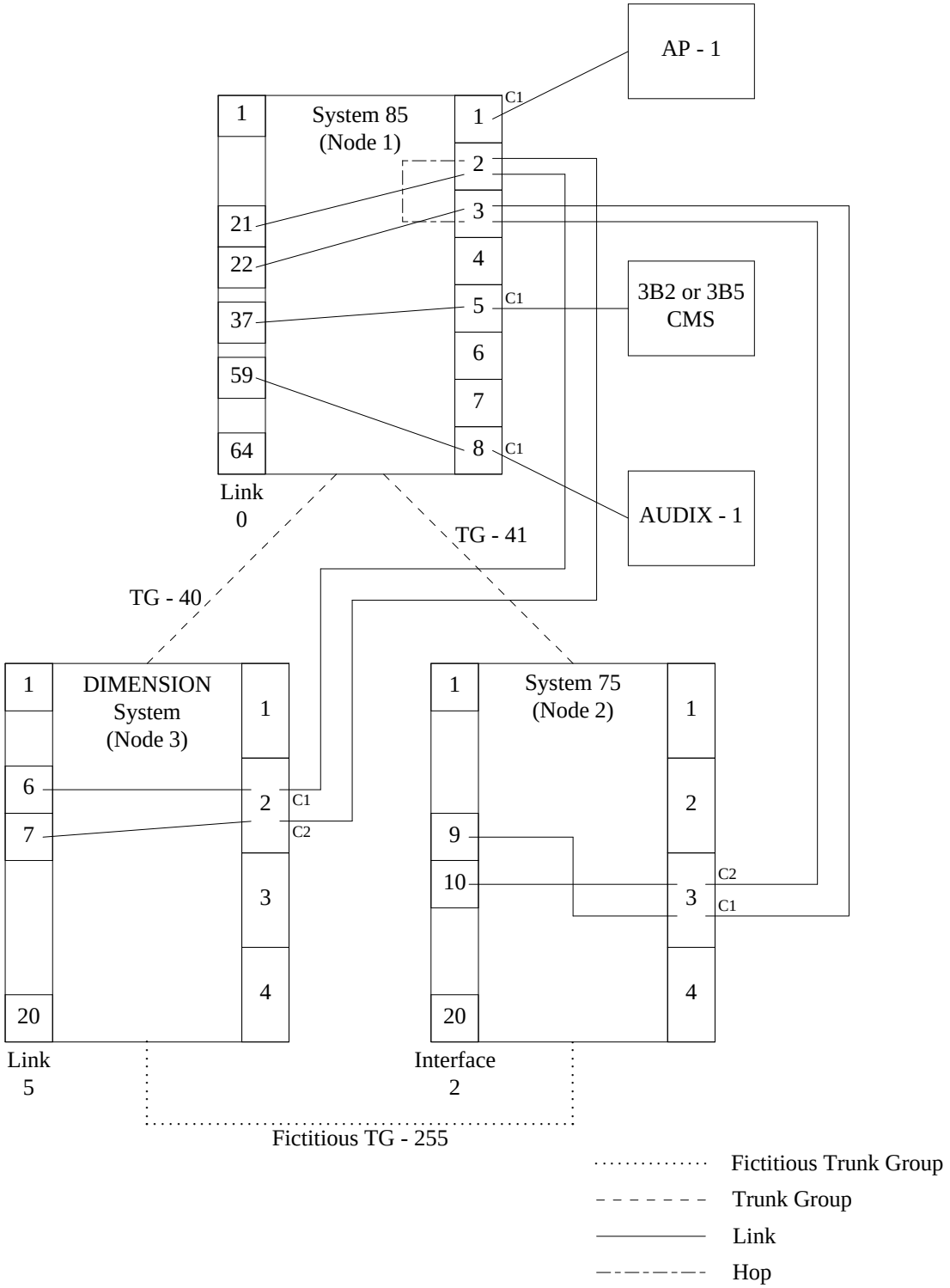
AP - 1
System 85
(Node 1)
1
21
22
37
59
64
1
2
3
4
5
6
7
8
C1
C1
C1
3B2 or 3B5
CMS
AUDIX - 1
Link
0
TG - 41
TG - 40
DIMENSION
System
(Node 3)
1
6
7
20
1
2
3
4
C1
C2
System 75
(Node 2)
1
9
10
20
1
2
3
4
C2
C1
Link
5
Interface
2
Fictitious TG - 255
Fictitious Trunk Group
Trunk Group
Link
Hop

ADMINISTERING THE NETWORK CHANNEL FOR A HOP

This administrative requirement is simpler than it at first appears. The links that are needed from node 1 have already been set up. These are the same links that were administered as direct connections from node 1 to node 2, and from node 1 to node 3. The only administration still needed at node 1 is to set up the network channel that will connect logical channel 2 (C2) from node 2 to logical channel 2 (C2) from node 3 (shown in the example as an alternating long and short dashed line).

PROCEDURE 257—DCIU ADMINISTRATION—DATA PATH CHARACTERISTICS

WORD 1	2	2	3	2	1	0		0	0	PROC 257
	1	2	3	4	5	6		7	8	

WORD 1, NETWORK CHANNELS

Component A

This is the source component for a Network Channel.

Field 1: This is the link identified with Component A.

0 = local switch port
1 through 8 = remote switch.

Field 2: This identifies the logical channel for Component A. When component A is from a distant switch (link 1 through 8), the range depends on the type of switch at the far end. When Component A is an Enhanced DIMENSION System (encode 7), the range is 1 to 20. Logical channels on DCIU links are not preassigned.

Component B

This is the destination component for a Network Channel.

Field 3: This is the link identified with Component B.

0 = local switch port
1 through 8 = remote switch.

Field 4: This identifies the logical channel for Component B. When Component B is from a distant switch, the range for Field 4 depends on the type of switch involved. When the other end of the link is an Enhanced DIMENSION System (encode 7), the range is from 1 to 20. Logical channels on DCIU links are not preassigned.

Field 5: This field sets the priority of the network channel being established. A ‘‘0’’ sets up low priority, and a ‘‘1’’ sets up high priority. In the event of network channel contention, all high priority network channel messages will be served before low priority messages are served.

Field 6: This field sets the alternate routing flag. A ‘‘0’’ sets up fixed (Permanent Virtual Circuit) routing. This type of routing requires that Component B be identified in Fields 3 and 4. A ‘‘1’’ establishes this as an Alternate Routing network channel. This type of routing requires that Component B is unspecified (dashed) in Fields 3 and 4.

Field 7: This field selects the memory table values used. If the field value is ‘‘0,’’ the values are scratch pad values. If the field value is ‘‘1,’’ the values are machine values.

Field 8: This is a display only field. If a ‘‘0’’ is displayed, the scratch pad and machine table values do not agree. If a ‘‘1’’ is displayed, the scratch pad and machine table values agree.

The Link Characteristics have already been established for both DCIU links. If they needed to be changed for some reason we would have to use different links because the same link cannot be assigned separate characteristics for different logical channels. The Data Path Characteristics (Procedure 257, Words 2 through 4) are set up at the originating switches (node 2 and 3) and are not reset at the node performing a hop.

FLEXIBLE DCIU ADMINISTRATION

In Release 2, Version 3 and earlier System 85 switches, the uses for DCIU ports are fixed. That is, each DCIU port can be used for only one application. Each DCIU port is **reserved** for a specific application in the factory before the system is shipped and cannot be used for any other purpose. The same ports on all DCIUs must be used for the same purpose.

For example, on a System 85, Release 2, Version 3, switch, DCIU port number 11 can only be used for Leave Word Calling on AP number 2. DCIU port number 11 has been permanently reserved for the Leave Word Calling feature on AP 2. If there is no AP number 2 on a given switch, or if AP 2 does not have a leave word calling function, this DCIU port can not be used.

Flexible DCIU Port Reservations

PORT RESERVATION VERSUS PORT ASSIGNMENT

The introduction of flexible DCIU port reservations in Release 2, Version 4, presents a degree of flexibility and a new administrative requirement not previously done by users or service support personal. With flexible port reservations, if there is no AP 2, ports 9 through 13 (those ports designated for AP 2) can be used for another purpose if needed. This flexibility is further enhanced by the shared use of adjuncts in a DCS.

Assignment

Assignment is done at the customer facility. Assignment amounts to *turning on* the function for which a DCIU port has been reserved. Assignment is done through system administration. The assignment of an application to a DCIU port is limited to the application for which that port has been reserved. This means that in Release 2, Version 3 and earlier systems, port assignment is limited by the ''*fixed reservations*'' applied at the factory. In Release 2, Version 4 switches, port assignment is made flexible by the ''*flexible port reservation*'' system.

Flexible Port Reservations

In System 85, Release 2, Version 4, the fixed reservation of DCIU ports is replaced by flexible DCIU port reservation. This allows a port that is not needed for a particular function to be used for a different purpose. Flexible port reservation also provides for the use of a new port type, the ES (Enhanced Services) port. The ES port is used for the new Centralized Messaging service. With ES ports, DCIU links can be provided not only from a switch processor to local adjunct processors but also to remote adjunct processors.

Flexible Port Assignment

With flexible DCIU port reservations, the assignment of DCIU ports is also flexible. However, once the port is ''*reserved*'' for a particular application, it must either be assigned to that application, left unassigned, or the reservation must be changed before a different assignment can be made. Port assignment flexibility is based on the DCIU port reservation process rather than the DCIU port assignment process.

Reserved or Unreserved Port Status

Because DCIU ports no longer have standard reservations, some terms and concepts are needed that are new with System 85, Release 2, Version 3. The ''reserved'' or ''unreserved'' status of a port effects administration. DCIU ports on Version 4 switches can be *reserved at the factory* before the switch is shipped, just as with Version 3 and earlier switches. This is done based on the TRACS (Translations Recovery Additions Conversions System) input. However, ports do not default to standard reservations. If not pre-reserved, the DCIU ports will be **unreserved**. Separate administration is then required to set up DCIU port reservations. Whether or not ports are pre-reserved, separate administration is still required to assign (or turn on) each DCIU port to its reserved application.

Standard Reservations and Assignments for APs

For local APs, DCIU port reservations and assignments are still fixed. If APs are to be used on a particular switch, standard DCIU port reservations and assignments must be used. However, these standards are not assigned by default. Standard reservations and assignments must be administered just like any other port reservation and assignment. If a local AP is not required, these ports can be reserved for other uses, but other ports cannot be reserved for use by a local AP. The standard ports for local APs are:

- Ports 1 through 8 for AP 1
- Ports 9 through 13 for AP 2
- Ports 14 through 18 for AP 3
- Port 19, and ports 30 through 33 for AP 4
- Ports 37 through 41 for AP 5.

The flexible DCIU port reservations enhancement is not readily apparent to the System 85 user. However, it is basic to the function of other System 85, Release 2, Version 4, enhancements including the new IACC (Integrated Adjunct Call Control) message set and Centralized Messaging service.

With flexible DCIU port reservations and the new ES port type, changes are needed in the recommended port uses. Some **recommended port reservations** are shown in Table G-B. These are recommended port reservations and except for port ''0'' are not automatic or default reservations.

These changes apply **only to Release 2, Version 4 switches** and as previously discussed, are mandatory only for the standard local AP applications.

Table G-2. Release 2, Version 4, DCIU Recommended Port Reservations

PORT	APPL	PORT	APPL	PORT	APPL	PORT	APPL
0	ILCC	16	LWCH 3	32	LWCL 4	48	DCS 19
1	MCS 1	17	LWCL 3	33	AMWL 4	49	ES 1
2	LWCH 1	18	AMWL 3	34	DCS 10	50	ES 2
3	LWCL 1	19	CLK 4	35	DCS 11	51	ES 3
4	AMWL 1	20	TEST 2	36	DCS 12	52	ES 4
5	TRAF	21	DCS 1	37	CLK 5	53	ES 5
6	TEST 1	22	DCS 2	38	MCS 5	54	ES 6
7	SMDR	23	DCS 3	39	LWCH 5	55	ES 7
8	CLK 1	24	DCS 4	40	LWCL 5	56	ES 8
9	CLK 2	25	DCS 5	41	AMWL 5	57	ES 9
10	MCS 2	26	DCS 6	42	DCS 13	58	ES 10
11	LWCH 2	27	DCS 7	43	DCS 14	59	ES 11
12	LWCL 2	28	DCS 8	44	DCS 15	60	ES 12
13	AMWL 2	29	DCS 9	45	DCS 16	61	ES 13
14	CLK 3	30	MCS 4	46	DCS 17	62	ES 14
15	MCS 3	31	LWCH 4	47	DCS 18	63	ES 15
						64	ES 16

LEGEND:

ILCC=Interlevel Communications Channel (Local Switch Port)
MCS =Message Center Service
LWCH=Leave Word Calling High Priority
LWCL=Leave Word Calling Low Priority
AMWL=Automatic Message Waiting Lamp
TRAF=Traffic
SMDR=Station Message Detail Recording
CLK =AP Clock Synchronization
DCS =Distributed Communications System
TEST=DIP/DCIU Test Port
ES =Enhanced Services Port

Numbers on the right of the APPL column show the instance number of the application. For example, MCS 1 refers to the Message Center Service application on AP number 1.

H. APPENDIX H: COMPATIBILITY MATRIX

The following tables provide an abbreviated listing of features and adjuncts that have been added or enhanced since the introduction of the System 85, Release 2 switch. It shows their compatibility with different versions of the System 85, Release 2. It also shows some relationships between adjunct releases and System 85 features and hardware items, such as terminals and interfaces.

FEATURES	SWITCH / COMPONENT RELEASES								
	Switch Release				CSM		3B5 AP Release		
	R2 V1	R2 V2	R2 V3	R2 V4	SM-1	SM-2	R1	R2	R3
ACCUNET Interface	No	No	Yes	Yes	Yes	Yes	—	—	—
AAR/ARS Enhancements:									
640 AAR Patterns	No	No	Yes	Yes	Yes	Yes	—	—	—
16 Preferences	No	No	Yes	Yes	Yes	Yes	—	—	—
160 ARS 6 Digit Translators	No	No	Yes	Yes	Yes	Yes	—	—	—
10 Patterns Per Translator	No	No	Yes	Yes	Yes	Yes	—	—	—
Pattern Queuing	No	No	Yes	Yes	Yes	Yes	—	—	—
IXC Access	No	No	Yes	Yes	Yes	Yes	—	—	—
Generalized Routing	No	No	Yes	Yes	Yes	Yes	—	—	—
ATMS	No	Yes	Yes	Yes	Yes	Yes	—	—	—
AUDIX:									
Basic	No	Yes	Yes	Yes	Yes	Yes	—	—	—
Coverage	No	Yes	Yes	Yes	—	—	—	—	—
Call Transfer Out	No	No	No	Yes	—	—	—	—	—
CDR Enhancements:									
Multiple LSUs	No	No	Yes	Yes	Yes	Yes	—	—	—
Variable Call Completion Threshold Timing	No	No	Yes	Yes	Yes	Yes	—	—	—
90,000 Auth Codes	No	No	Yes	Yes	Yes	Yes	—	—	—
Account Codes:									
15-Digit Codes	No	No	Yes	Yes	Yes	Yes	—	—	—
Forced Entry	No	No	Yes	Yes	Yes	Yes	—	—	—
Processor Communication Circuit	No	No	No	Yes	No	Yes	—	—	—
3B2 LSUs	No	No	No	Yes	Yes	Yes	—	—	—
Data Interfaces:									
DCP Data Module	Yes	Yes	Yes	Yes	Yes	Yes	Yes	Yes	Yes
DCP (to AP)	No	Yes	Yes	Yes	Yes	Yes	Yes	Yes	Yes
EIA (4-Port Board)	No	Yes	Yes	Yes	Yes	Yes	Yes	Yes	Yes
3270 Conversion	*	*	Yes	Yes	Yes	Yes	—	—	—
ISN Interface	No	†	Yes	Yes	Yes	Yes	—	—	—

* Available as a line appearance only, thus not recordable on CDR.

† Available but with limited or reduced functionality.

FEATURES	SWITCH / COMPONENT RELEASES								
	Switch Release				CSM		3B5 AP Release		
	R2 V1	R2 V2	R2 V3	R2 V4	SM-1	SM-2	R1	R2	R3
Default Terminal Dialing	No	No	Yes	Yes	Yes	Yes	—	—	—
DS1 (Tie Trunks)	Yes	Yes	Yes	Yes	Yes	Yes	—	—	—
Dual Path Coverage (Call Coverage)	No	Yes	Yes	Yes	Yes	Yes	—	—	—
Unrestricted 5-Digit Dialing	No	No	Yes	Yes	Yes	Yes	No	Yes	Yes
Extension Number Portability	No	No	Yes	Yes	Yes	Yes	No	Yes	Yes
LWC w/out AP in a DCS Environment	No	Yes	Yes	Yes	Yes	Yes	—	—	—
Paging With Music Option	No	No	Yes	Yes	Yes	Yes	—	—	—
Remote Port Carrier	No	†	Yes	Yes	Yes	Yes	—	—	—
Remote Module with Fiber Optic Connections	Yes	Yes	Yes	Yes	Yes	Yes	—	—	—
Symbolic Dialing	No	No	Yes	Yes	Yes	Yes	—	—	—
Terminals:									
VDS (7404D)	†	Yes	Yes	Yes	Yes	Yes	**	**	**
IDT (7407D)	†	Yes	Yes	Yes	Yes	Yes	**	**	**
7406D's	†	†	†	Yes	No	Yes	**	**	**
BCT 510D PT	†	Yes	Yes	Yes	Yes	Yes	‡	‡	‡
7303 and 05S	No	Yes	Yes	Yes	Yes	Yes	—	—	—
Unified Messaging:									
MCS and AUDIX	No	Yes	Yes	Yes	Yes	Yes	Yes	Yes	Yes
MCS, UNIX System, and AUDIX	No	Yes	Yes	Yes	Yes	Yes	No	Yes	Yes

† Available but with limited or reduced functionality.

** MCS messages and mail can be received using EIA terminals attached to DCP Mode 2 interfaces that are available with these terminals.

‡ Functions as an enhanced EIA terminal with screen labeled keys.

I. APPENDIX I: CALL-HANDLING APPLICATIONS FOR EXECUTIVES

This appendix provides recommendations for implementing selected call-handling configurations. Executive call handling is not a distinct feature of the System 85. It is, rather, a combination of the Bridged Call and Call Coverage features.

Using the Bridged Call and Call Coverages features in the executive call handling configurations allows calls to be handled by an answering position that has a close working relationship with the executive. Typically, this will be a personal secretary who is aware of the principal's status (i.e., daily schedule, relative importance of calls to the executive, etc.). Executive call handling provides the executive with a personalized form of call coverage.

General Arrangements

Three general arrangements are provided: Bridging, Call Coverage, and Bridging and Call Coverage in combination. Each arrangement has distinct advantages and limitations depending on the application. The type of call-handling arrangement implemented is determined by the executive's needs.

Each of these arrangements is presented in a number of configuration examples to illustrate how they can be used as an effective tool in providing call handling for executives.

> **NOTE:** The terms ''image,'' ''appearance,'' and ''extension'' appear throughout this manual. Refer to Appendix E for a detailed explanation of these terms.

Configuration Format

- A diagram of each person's voice terminal and its call-handling connections
- A descriptive title
- A list of recommended features and functions that may be administered to each of the user groups
- A list of user interactions and limitations associated with that configuration.

Multiappearance voice terminals (i.e., 7405D, 7407D, PT 510D, etc.) must be used for the configurations illustrated in this appendix. There is an exception, the SLS (straight line set) in Configuration N. This can be a single-line analog voice terminal.

The arrangements in configuration groups 2 and 3 also define the ''Coverage Criteria'' for voice terminals assigned Call Coverage. The Coverage Criteria are ''Busy'' and ''Don't Answer'' (three to four rings)'' for all the configurations except Configuration N (where Coverage Criteria applies to the personal secretary only).

Configuration Designations

- Solid lines — These lines represent bridged connections between the images of an extension.
- Dashed lines — These lines indicate a Call Coverage path that begins at the executive's voice terminal.
- CP # — These marks designate the Coverage paths (especially with multiple executives) and are numbered for easier identification.

BRIDGING CONFIGURATIONS

Executive office call-handling arrangements using the Bridged Call feature, for executives who prefer to have a personal secretary screen all incoming calls on a regular basis.

(Configuration A)

Executive's Voice Terminal Bridged to the Personal Secretary's Voice Terminal

Applications

Configuration A provides personalized call handling for a single executive.

Table I-1. Administration Characteristics for Configuration A

Recommended Features	
Executive	**Secretary**
AD (Abbreviated Dialing)	AD
AD Program	AD Program
Manual Exclusion	Leave Word Calling
LWC (Leave Word Calling)	Manual Message Waiting Send
Manual Message Waiting Receive	LWC Cancel
Priority Calling	AD Pause
Ringing Cutoff	
AD Pause	

User Interactions and Limitations

- Incoming call rings on both images of an executive's call appearance.
- Secretary can answer calls to the executives after the first ring.
- For important calls, the secretary contacts the executive using the Automatic Intercom feature.
- If a secretary takes a message, a Manual Message Waiting indication can be sent to alert the executive.
- To avoid ringing, the executive may activate the Ringing Cutoff feature.
- The Conference and Transfer buttons are inoperable during a Bridged Call for both the originating and the bridged voice terminal. Either user can bridge on after a conference is established.
- The Send All Calls function should not be assigned with bridging arrangements in switches prior to Release 2, Version 4, because of possible undesirable feature interactions. The Send All Calls function can be used with bridging arrangements for Release 2, Version 4 switches.
- One MMWR (Manual Message Waiting Receive) button is assigned for each MMWS (Manual Message Waiting Send) button. These buttons are assigned in pairs (one send and one receive) for signaling between the executive and secretary.

(Configuration B)

Two Executives' Voice Terminals Bridged to the Personal Secretaries' Voice Terminals

Applications

Configuration B provides personalized call handling for two executives. Secretaries A and B are able to provide call handling for either executive.

Table I-2. Administration Characteristics for Configuration B

Recommended Features	
Executive	**Secretaries**
AD (Abbreviated Dialing)	AD
AD Program	AD Program
Manual Exclusion	LWC
LWC (Leave Word Calling)	Manual Message Waiting Send
Manual Message Waiting Receive	LWC Cancel
Priority Calling	AD Pause
Ringing Cutoff	
AD Pause	

User Interactions and Limitations

- In this configuration, each secretary provides call-handling support for the other.
- For calls requiring consultation with an executive, a secretary would contact the executive using the Dial Intercom feature.
- In this configuration, all three appearances of the executives' voice terminals are shared. By only sharing call appearances, the secretaries would have an extra appearance button available for other assignments.
- Because of the number of appearance buttons ten on multiappearance voice terminals, configurations like Configuration B are limited to two executives.
- The Conference and Transfer buttons are inoperable during Bridged Calls.
- One MMWR button is assigned for each MMWS button. Multiple buttons can be assigned so the secretary may signal one or more executives or secretaries.

(Configuration C)

Two Executives' Voice Terminals Bridged to the Voice Terminals of Personal Secretaries and a Backup Secretary

Applications

Configuration C provides personalized call handling for two executives. Secretaries A and B are able to provide call handling for either of the executives. The backup secretary shares an appearance of every extension; therefore, this secretary can cover for any one appearance. This application could be used for offices with many incoming calls, so the backup secretary could cover for the personal secretaries when necessary.

Table I-3. Administration Characteristics for Configuration C

Recommended Features		
Executive	**Secretaries**	**Backup Secretary**
AD Program	MMWS (Manual Message Waiting Send)	AD
Ringing Cutoff	AD Program	LWC
Manual Exclusion	LWC Cancel	LWC Cancel
LWC (Leave Word Calling)	AD	AD Program
MMWR (Manual Message Waiting Receive)	MMWR	MMWS
Priority Calling	AD Pause	AD Pause
AD (Abbreviated Dialing)	LWC	
AD Pause		

User Interactions and Limitations

- Both personal secretaries' and the backup secretary's terminal have images of both executives' first two appearances.
- The backup secretary can answer calls alerting at either secretary's extension number.
- Both secretaries can answer calls alerting at the backup secretary's extension number.
- For calls requiring consultation with the executive, the backup secretary would contact the executive using the Intercom feature.
- If the backup secretary takes a message, a manual message waiting indicator can be sent to alert the recipient (executive or personal secretary).
- The Conference and Transfer buttons are inoperable during bridged calls.
- One MMWR button is assigned for each MMWS button. Multiple buttons can be assigned so the secretary can signal one or more executives or secretaries.

(Configuration D)

Two Executives With Extra Voice Terminals Bridged to the Voice Terminals of Personal Secretaries and a Backup Secretary

Applications

Configuration D provides call handling for two executives who each have two voice terminals. In Configuration D, the second terminal of each executive has the same extension number. Therefore, the second terminal is administered with the same features as the first terminal. This configuration can be expanded if the executive needs more than two voice terminals.

Table I-4. Administration Characteristics for Configuration D

Recommended Features		
Executive	**Secretaries**	**Backup Secretary**
Ringing Cutoff	MMWS (Manual Message Waiting Send)	AD
AD Program	AD Program	LWC
Manual Exclusion	LWC	LWC Cancel
LWC (Leave Word Calling)	LWC Cancel	AD Program
MMWR (Manual Message Waiting Receive)	MMWR	MMWS
Priority Calling	AD Pause	AD Pause
AD Pause	AD	
Abbreviated Dialing (AD)		

User Interactions and Limitations

- Executives with an extra voice terminal are able to initiate or receive calls from various locations (e.g., desk; or a working conference table) within their office, or allow a guest to make calls.
- Appearances and feature assignments for a second voice terminal, which is assigned the same extension number as the other voice terminal, must be a complete duplicate of those for the first terminal.
- The Conference and Transfer buttons are inoperable during Bridged Calls.
- One MMWR button is assigned for each MMWS button. Multiple buttons can be assigned so the secretary can signal one or more executives or secretaries.

(Configuration E)

Two Executives With Extra Voice Terminals Bridged to the Voice Terminals of Personal Secretaries Sharing a Backup Secretary, Plus a Voice Terminal in Another Room

Applications

Configuration E is an expansion of call handling for secretaries that are occupied with other duties. It is recommended that the person in the file or copy room is capable of providing personalized coverage for either executive.

Table I-5. Administration Characteristics for Configuration E

Recommended Features		
Executive	**Secretaries**	**Backup Secretary**
Ringing Cutoff	MMWS (Manual Message Waiting Send)	AD
AD Program	LWC Cancel	LWC
Manual Exclusion	LWC	AD Pause
LWC (Leave Word Calling)	MMWR	AD Program
MMWR (Manual Message Waiting Receive)	AD	MMWS
Priority Calling	AD Program	
AD (Abbreviated Dialing)	AD Pause	
AD Pause		

User Interactions and Limitations

- A secretary in a file or copy room will be able to provide an immediate call-handling response for the executives, their secretaries, and the backup secretary when the other call-handling positions are not available to answer calls.
- Any available appearances on the file or copy room's voice terminal could be assigned Abbreviated Dialing numbers such as the service repair number(s) of office equipment, a central files number, etc.
- The Conference and Transfer buttons are inoperable during Bridged Calls.
- One MMWR button is assigned for each MMWS button. Multiple buttons can be assigned so the secretary can signal one or more executives or secretaries.

(Configuration F)

Two Executives With Extra Voice Terminals Bridged to the Voice Terminals of Secretaries Sharing a Backup Secretary With a Bridged Voice Terminal, and a Voice Terminal in Another Room, Plus a Guest Terminal in the Executive's Office

Applications

Configuration F is recommended for executives who have a conference room or meeting area where they need a simple voice terminal for guests.

Table I-6. Administration Characteristics for Configuration F

Recommended Features		
Executive	**Secretaries**	**Backup Secretary**
Ringing Cutoff	MMWS (Manual Message Waiting Send)	AD
AD Program	AD Program	LWC
Manual Exclusion	LWC Cancel	LWC Cancel
LWC (Leave Word Calling)	AD	AD Program
MMWR	MMWR	MMWS
Priority Calling	AD Pause	AD Pause
AD (Abbreviated Dialing)		
AD Pause		

User Interactions and Limitations

- The guest terminal in the executive's office is typically used by visitors initiating outgoing calls.
- Call handling through the Bridged Call feature for the guest terminal is provided because visitors tend to give out the extension number of the voice terminal they are using as the number where they can be reached.
- A single-appearance terminal may be bridged with up to 15 multiappearance terminals.
- The Conference and Transfer buttons are inoperable during bridged calls.
- One MMWR button is assigned for each MMWS button. Multiple buttons can be assigned so the secretary can signal one or more executives or secretaries.

CALL COVERAGE CONFIGURATIONS

Executive office call-handling arrangements

using the Call Coverage feature, for executives

who prefer to answer their own voice terminal

when they are in the office.

(Configuration G)

Executive With Call Coverage by Only the Personal Secretary

Applications

Configuration G is recommended for executives who only need one coverage point. If the executive doesn't answer, calls redirect to the secretary's voice terminal. The secretary must take the call, or it will go unanswered.

Table I-7. Administration Characteristics for Configuration G

Recommended Features	
Executives	**Secretary**
AD (Abbreviated Dialing)	AD
AD Program	AD Program
LWC (Leave Word Calling)	LWC
LWC Cancel	LWC Cancel
Send All Calls	Manual Message Waiting Send
Automatic Callback	Consult/Return
Priority Calling	Coverage Callback
MMWR (Manual Message Waiting Receive)	AD Pause
Caller Response Interval = 3 seconds	
AD Pause	

User Interactions and Limitations

- If the executive is unable to, or chooses not to, answer an incoming call during the don't answer interval, the call will be redirected to the personal secretary after the interval has elapsed.
- The executive should have a Send All Calls button so that, if he/she chooses, all incoming calls can be immediately redirected to the secretary.
- If the executive is active on all incoming appearances, the next incoming call is immediately redirected to the secretary.
- Coverage calls complete to an appearance of the secretary's primary extension, and a display indicates why each call was redirected, and gives the calling and called party identification.
- Dual coverage paths are not recommended for executives. Usually only the primary covering user has up-to-date information regarding the executive's daily schedule and knows the relative importance of calls (internal and external) to the executive.
- One MMWR button is assigned for each MMWS button. One of each button can be assigned so the secretary can signal the executive.

(Configuration H)

Two Executives With Call Coverage

Applications

Configuration H is recommended for two executives whose secretaries are able to provide personalized coverage for either executive. If one secretary is busy, the other secretary can cover the executive's call.

Table I-8. Administration Characteristics for Configuration H

Recommended Features	
Executives	**Secretaries**
AD (Abbreviated Dialing)	AD
AD Program	AD Program
LWC (Leave Word Calling)	LWC
LWC Cancel	LWC Cancel
Send All Calls (SAC)	MMWS (Manual Message Waiting Send)
Automatic Callback	Consult/Return
Priority Calling	Coverage Callback
Manual Message Waiting Receive	Call Pickup
Caller Response Interval = 3 seconds	AD Pause
AD Pause	

User Interactions and Limitations

- In this configuration, each secretary provides coverage for the principal executive and serves as a second coverage point for the second executive.
- If the primary covering secretary is active on a call and another call comes in, the secondary coverage position can immediately respond to the new call through the Call Pickup feature.
- If a secretary's voice terminal does not have a display module, the executive's appearance can be assigned to a covering secretary's set or to a coverage module (if available).
- The final coverage point of an executive's coverage path should not include a group of pooled answering positions, such as Message Service Center.
- Call handling for Secretary A's extension number would consist of placing Secretary B in a coverage path covering for Secretary A, and vice-versa for Secretary B.
- One MMWR button is assigned for each MMWS button. Multiple buttons can be assigned so the secretary can signal one or more executives or secretaries.

(Configuration I)

Three Executives With Call Coverage to Shared Personal Secretaries

Applications

Configuration I is recommended for three executives whose secretaries are familiar with the business affairs of all three executives. Each secretary must be able to provide personalized coverage for all three executives and for the other two secretaries. For this coverage configuration to be effective, a close working relationship is necessary.

Table I-9. Administration Characteristics for Configuration I

Recommended Features	
Executives	**Secretaries**
AD (Abbreviated Dialing)	AD
AD Program	AD Program
LWC (Leave Word Calling)	LWC
LWC Cancel	LWC Cancel
SAC (Send All Calls)	Manual Message Waiting Send
Automatic Callback	Consult/Return
Priority Calling	Coverage Callback
Manual Message Waiting Receive	AD Pause
Caller Response Interval = 3 seconds	
AD Pause	

User Interactions and Limitations

- In this arrangement, the personal secretaries act as the first, second, and possibly the third coverage point for the executive. The secretaries are also in the coverage paths and providing call coverage for each other.
- The secretaries should have Call Pickup, a frequently used feature to respond to covered calls.
- The don't answer interval is set at two rings, to reduce the number of total rings a caller hears, before proceeding to the third coverage point.
- Three coverage points is the maximum for any arrangement.
- One MMWR button is assigned for each MMWS button. Multiple buttons can be assigned so the secretary can signal one or more executives or secretaries.

(Configuration J)

Two Executives With Call Coverage to Personal Secretaries and a Backup Secretary

Applications

Configuration J is recommended for two executives whose personal secretaries can provide personalized coverage for either executive. If both secretaries are occupied, the backup secretary would provide coverage. The backup secretary would have to be aware of Executive A's and B's status, as well as any other executive in the coverage path.

Table I-10. Administration Characteristics for Configuration J

Recommended Features		
Executive	**Secretaries**	**Backup Secretary**
Send All Calls	MMWS (Manual Message Waiting Send)	AD
AD Program	AD Program	LWC
LWC (Leave Word Calling)	LWC	LWC Cancel
LWC Cancel	MMWR	AD Program
MMWR (Manual Message Waiting Receive)	Call Pickup	MMWS
Priority Calling	LWC Cancel	Coverage Callback
AD (Abbreviated Dialing)	Consult/Return	ICI (Incoming Call Identification)
Automatic Callback	Coverage Callback	SBI (Station Busy Identification)
Caller Response Interval = 3 seconds	AD	Call Pickup
AD Pause	AD Pause	Consult/Return
		AD Pause

User Interactions and Limitations

- The personal secretaries and a backup secretary provide coverage for both executives.
- A backup secretary may use a Manual Message Waiting Send feature to alert an executive or personal secretary of messages.
- A backup secretary with a voice terminal equipped with a coverage module can provide coverage (called party Identification) for over 20 principals.
- One MMWR button is assigned for each MMWS button. Multiple buttons can be assigned so the secretary can signal one or more executives or secretaries.

(Configuration K)

Executive Having an Extra Terminal With Call Coverage by a Personal Secretary

Applications

Configuration K is recommended for executives who may receive calls on their second terminal which might be located in a room other than their office. The executive could then cover the calls to the office terminal, or redirect the calls to his or her personal secretary.

Table I-11. Administration Characteristics for Configuration K

Recommended Features		
Executives	**Secretary**	**Second Terminal**
AD (Abbreviated Dialing)	AD	Data Protection — Temporary
AD Program	AD Program	AD Program
LWC (Leave Word Calling)	LWC	Data Call Setup
LWC Cancel	LWC Cancel	SAC
SAC (Send All Calls)	MMWS (Manual Message Waiting Send)	AD
Automatic Callback	Consult/Return	AD Pause
Priority Calling	Coverage Callback	
MMWR (Manual Message Waiting Receive)	Call Pickup	
Caller Response Interval = 3 seconds	AD Pause	

User Interactions and Limitations

- In this example, the executive has a second voice terminal that is typically used for data or voice calls.
- The executive may retrieve calls to his or her second terminal (X4112), for example, by placing extension 4100 in a coverage path for extension 4112. The SAC feature button must be used on the second terminal in order for the executive to receive second terminal calls on the office terminal.
- The coverage path for both of the executives' voice terminals could extend to another secretary who may be in the same office area.
- One MMWR button is assigned for each MMWS button. Multiple buttons can be assigned so the secretary can signal one or more executives or secretaries.

(Configuration L)

Two Executives With Call Coverage by Personal Secretaries, a Backup Secretary, Plus a Receptionist

Applications

Configuration L is recommended for executives whose third coverage point does not have to be personalized (for example, a general receptionist or AUDIX). In most cases, the backup secretary should be available to cover calls unanswered by the personal secretaries.

Table I-12. Administration Characteristics for Configuration L

Recommended Features			
Executives	**Secretaries**	**Backup Secretary**	**Receptionist**
AD (Abbreviated Dialing)	MMWS (Manual Message Wait Send)	MMWS	Consult/Return
AD Program	AD Program	CCB	LWC
LWC (Leave Word Calling)	LWC	Call pickup	CCB
LWCC (LWC Cancel)	CCB (Coverage Callback)	Consult/Return	MMWS
SAC (Send All Calls)	Consult/Return	AD	LWCC
Auto Callback	AD	MMWR	MMWR
Priority Calling	LWCC	LWCC	
MMWR (Manual Message Waiting Receive)	Call Pickup	LWC	
Caller Response Interval = 3 seconds	AD Pause		
Ringing Cutoff			
AD Pause			

User Interactions and Limitations

- A backup secretary is responsible for covering both executives (as a second point in the executive's coverage path) and is also the first point in the personal secretary's coverage path for the executive's extension numbers.
- Calls to executives, which are not picked up by the personal secretaries and backup secretaries, will complete to the receptionist's (executive area) voice terminal, after the assigned don't answer interval.
- The executive area receptionist is the final coverage point for a number of executives that may occupy all, or a major portion, of a building floor.
- One MMWR button is assigned for each MMWS button. Multiple buttons can be assigned so the secretary can signal one or more executives or secretaries.

COMBINED BRIDGING AND COVERAGE CONFIGURATIONS

Executive office call-handling arrangements that, when combined in selected configurations, meet the most often-requested needs of the customer.

(Configuration M)

Personal Secretary's Voice Terminal Bridged to an Executive's Voice Terminal With Call Coverage to a Backup Secretary

Applications

Configuration M is recommended for executive's with many incoming calls. While an executive is busy with one call, a secretary equipped with a coverage module can cover more than 20 other calls.

Table I-13. Administration Characteristics for Configuration M

Recommended Features		
Executive	**Personal Secretary**	**Backup Secretary**
AD (Abbreviated Dialing)	MMWS (Manual Message Waiting Send)	AD
AD Program	AD	MMWS
Manual Exclusion	LWC (Leave Word Calling)	Consult/Return
LWCC (LWC Cancel)	LWCC	LWCC
Automatic Callback	Consult/Return	AD Program
Priority Calling	Coverage Callback	LWC
MMWR (Manual Message Waiting Receive)	AD Pause	
Ringing Cutoff		
Leave Word Calling		
AD Pause		

User Interactions and Limitations

- When the executive is busy on one call and a second call arrives, the second call would ring on the second appearance of both the executive's and personal secretary's voice terminal. If this call is not answered, it is redirected to the backup secretary after the specified initial Don't Answer interval (three to four rings).
- Calls that are placed to the personal secretary's extension number are covered by the backup secretary.
- A backup secretary with a voice terminal equipped with a Call Coverage Module can provide coverage (called party identification) for over 20 principals. The Coverage Module adds extra appearances that are assigned soft numbers (extension appearance numbers) of each executive's coverage path.
- One MMWR button is assigned for each MMWS button. Multiple buttons can be assigned so the secretary can signal one or more executives or secretaries.

(Configuration N)

An Executive With an Analog Voice Terminal Shares an Appearance With a Personal Secretary or Backup Secretary

Applications

Configuration N is used for executives who do not want to have a multiappearance voice terminal in their office. This might be desirable for executives who prefer to answer only one call at a time, and have the personal secretary (or backup secretary) cover any other calls.

Table I-14. Administration Characteristics for Configuration N

Recommended Features		
Executives	**Secretaries**	**Backup Secretary**
AD (Abbreviated Dialing)	AD	AD
LWC (Leave Word Calling)	LWC	LWC
Manual Exclusion	LWCC (LWC Cancel)	LWCC
Ringing Cutoff	AD Program	AD Program
Priority Calling	AD Pause	
AD Pause		

User Interactions and Limitations

- This configuration illustrates how a personal secretary (or backup) performs most of the call-handling duties for an executive.
- The executive's single-appearance voice terminal must be administered as a straight-line set in order to share the appearance with the personal secretary's voice terminal.
- As many as 15 multiappearance terminals can share the executive's single appearance (X6100).
- Because single-appearance terminals are not equipped with status lamps to indicate busy/idle conditions, the executive will have to: (1) Go off-hook to determine the busy/idle status of the appearance, (2) Wait until the shared appearance is idle to place a call, (3) Select between ringing, abbreviated ringing, delayed ringing, and no ringing of the voice terminal. There is no visual alerting with this arrangement.
- The personal secretary's extension number (X6101) is provided call coverage by the backup secretary.
- One MMWR button is assigned for each MMWS button. Multiple buttons can be assigned so the secretary can signal one or more executives or secretaries.

(Configuration O)

Executives' Voice Terminals Bridged to Personal Secretary With Call Coverage Provided by Backup Secretaries

Applications

Configuration O is recommended for executives and their personal secretaries that are repeatedly in and out of their office. This configuration would provide call handling for the executive by all three secretaries.

Table I-15. Administration Characteristics for Configuration O

Recommended Features		
Executive	**Personal Secretary**	**Backup Secretary**
AD Program	MMWS (Manual Message Waiting Send)	AD
AD (Abbreviated Dialing)	AD	MMWS
Manual Exclusion	LWC (Leave Word Calling)	Consult/Return
LWCC (LWC Cancel)	LWCC	AD Program
Automatic Callback	Consult/Return	LWCC
Priority Calling	Coverage Callback	LWC
MMWR (Manual Message Waiting Receive)	MMWR	Send All Calls
Ringing Cutoff	AD Pause	AD Pause
Leave Word Calling	Send All Calls	

User Interactions and Limitations

- Incoming calls ring and visually alert at both the executive's and the personal secretary's voice terminals. More than two 2-way appearances can be assigned to the executive's voice terminal.
- If there is no answer after the designated ring cycle, or if every terminated/originated appearance of the executive's extension is busy, the incoming call goes the backup secretaries for coverage.
- The Send All Calls feature on the personal secretary's voice terminal would only be activated when both the executive and personal secretary are away from their offices.
- In this example, extension EXEC is actually a soft number in the executive's coverage path. The executive's coverage extension number (EXEC) is bridged to both backup secretaries. This allows either backup secretary to rapidly respond to the covered call.
- One MMWR button is assigned for each MMWS button. Multiple buttons can be assigned so the secretary can signal one or more executives or secretaries.

J. APPENDIX J: ACRONYMS AND ABBREVIATIONS

The following are the specialized acronyms and abbreviations and their associated terms. Explanations of these terms are provided within the text or in the glossary.

- *AAR:* Automatic Alternate Routing
- *ACD:* Automatic Call Distribution
- *ACTGA:* Attendant Control of Trunk Group Access
- *ACU:* Automatic Calling Unit
- *ADU:* Asynchronous Data Unit, *or* Automatic Dialing Unit
- *AIM:* Asynchronous Interface Module
- *AIOD:* Automatic Identification of Outward Dialing
- *AMA:* Automatic Message Accounting
- *ANI:* Automatic Number Identification
- *AP:* Applications Processor
- *ARS:* Automatic Route Selection
- *ASCII:* American Standard Code for Information Interchange
- *ATMS:* Automatic Transmission Measurement System
- *AUDIX:* Audio Information Exchange
- *AUTOVON:* Automatic Voice Network
- *AVD:* Alternate Voice Data
- *AWG:* American Wire Gauge
- *BCC:* Bearer Capability Class
- *BCT:* Business Communications Terminal
- *Bisync:* Binary Synchronous Communications
- *BLF:* Busy Lamp Field
- *BOS:* Bit-Oriented Signaling
- *bps:* Bits Per Second
- *BRI:* Basic Rate Interface
- *BTC:* Better Transmission Checking
- *CAAVT:* Call Answer From Any Voice Terminal
- *CAS:* Centralized Attendant Service

- *CCITT:* International Telephone and Telegraph Consultation Committee
- *CCS:* Hundred Call Seconds
- *CCSA:* Common Control Switching Arrangement
- *CDM:* Channel Division Multiplexer
- *CDR:* Call Detail Recording
- *CDRR:* Call Detail Recording and Reporting
- *CDRU:* Call Detail Recording Utility
- *CEM:* Channel Expansion Multiplexer
- *CMDR:* Centralized Message Detail Recording
- *CM:* Call Management
- *CMS:* Call Management System
- *COS:* Class-of-service
- *CPE:* Customer Premises Equipment, *or* Customer Provided Equipment
- *CRT:* Cathode Ray Tube
- *CSM:* Centralized System Management
- *CSMDR:* Centralized Station Message Detail Recording
- *CU:* Control Unit
- *DAC:* Dial Access Code
- *DCA:* Data Communications Access
- *DCE:* Data Communications Equipment
- *DCIU:* Data Communications Interface Unit
- *DCP:* Digital Communications Protocol
- *DCS:* Distributed Communications Service
- *DDC:* Direct Department Calling
- *DDCMP:* Digital Data Communications Message Protocol
- *DDD:* Direct Distance Dialing
- *DID:* Direct Inward Dialing
- *DMA:* Direct Memory Access
- *DMI:* Digital Multiplexed Interface
- *DNIS:* Dialed Number Identification Service
- *DOD:* Direct Outward Dialing
- *DSA:* Dial Service Assistance
- *DSC:* Dedicated Switch Connections

- *DSU:* Data Service Unit
- *DS1:* Digital Service - 1
- *DTDM:* Digital Terminal Data Module
- *DTGS:* Direct Trunk Group Selection
- *DTE:* Data Terminal Equipment
- *DTMF:* Dual Tone Multi-Frequency
- *DXS:* Direct Extension Selection
- *EBCDIC:* Extended Binary Coded Decimal Interchange Code
- *EDC:* Electronic Document Communications
- *EFC:* Electronic File Cabinet
- *EIA:* Electronics Industry Association
- *EPSCS:* Enhanced Private Switched Communications Service
- *ES:* Enhanced Services
- *ETA:* Extended Trunk Access
- *ETN:* Electronic Tandem Network
- *EUCD:* Enhanced Uniform Call Distribution
- *FADS:* Force Administration Data System
- *FAX:* Facsimile
- *FEAC:* Forced Entry of Account Codes
- *FM:* Facilities Management
- *FP:* Feature Package
- *FRL:* Facilities Restriction Level
- *FX:* Foreign Exchange
- *GPP:* General Purpose Port
- *GT:* General Trade
- *HCA:* Host Computer Access
- *HCMR:* High Capacity Minirecorder
- *HNPA:* Home Numbering Plan Area
- *IACC:* Integrated Adjunct Call Control
- *IBM:* International Business Machine Corporation
- *ICI:* Incoming Call Identification
- *IDDD:* International Direct Distance Dialing
- *IDT:* Integrated Display Terminal (7407D)

- *IPA:* Interpartition Access
- *ISDN:* Integrated Services Digital Network
- *ISN:* Information Systems Network
- *ISO:* International Standards Organization
- *IXC:* Interexchange Carrier Access
- *I/O:* Input/Output
- *Kbps:* Kilobits per second
- *KSR:* Keyboard Send and Receive
- *LADS:* Local Area Data Set
- *LAN:* Local Area Network
- *LDN:* Listed Directory Number
- *LND:* Last Number Dialed
- *LSU:* Local Storage Unit
- *LWC:* Leave Word Calling
- *LXD:* Last Extension Dialed
- *MAAP:* Maintenance and Administration Panel
- *MADU:* Multiple Asynchronous Data Unit
- *Mbps:* Megabits per second
- *MCS:* Message Center Service
- *MCT:* Malicious Call Trace
- *MDM:* Modular Data Module
- *MET:* Multibutton Electronic Telephone (DIMENSION System Voice Terminal)
- *MFT:* Multifunction Telephone (Multiappearance Voice Terminal)
- *MFAT:* Multifunction Analog Telephone (73-Series)
- *MFDT:* Multifunction Digital Telephone (74-Series, 510D, 515 BCT)
- *MFET:* Multifunction Electronic Telephone (72-Series)
- *MIA:* Most Idle Agent
- *MIS:* Management Information System
- *MLDN:* Multiple Listed Directory Number
- *MMWR:* Manual Message Waiting Receive
- *MMWS:* Manual Message Waiting Send
- *MOS:* Message-Oriented Signaling
- *MPDM:* Modular Processor Data Module

- *MTDM:* Modular Trunk Data Module
- *Mux:* Multiplex
- *NCOSS:* Network Control Operations Support System
- *NPA:* Numbering Plan Area
- *OTL:* Originating Test Line
- *PC:* Personal Computer
- *PDM:* Processor Data Module
- *PRI:* Primary Rate Interface
- *PT:* Personal Terminal
- *PVC:* Permanent Virtual Circuit
- *QDN:* Queue Directory Number
- *RAM:* Random Access Memory
- *RF:* Radio Frequency
- *RJE:* Remote Job Entry
- *RLT:* Release Link Trunk
- *RMATS:* Remote Maintenance, Administration, and Traffic System
- *ROM:* Read-Only-Memory
- *RS:* Recommended Standard
- *SCI:* Switch Communication Interface
- *SCS:* System Clock Synchronizer
- *SDCPI:* Switched Digital Communications Protocol Interface
- *SDLI:* Synchronous Data Link Interface
- *SLS:* Straight Line Set
- *SMDR:* Station Message Detail Recording
- *SMT:* System Management Terminal
- *SNA:* Systems Network Architecture
- *SSI:* Standard Serial Interface
- *TCM:* Terminal Change Management *or* Traveling Class Mark
- *TDM:* Trunk Data Module
- *TEMPEST:* Text Editing, Management, and Processing in an Enhanced Synchronized Terminal
- *TMS:* Time Multiplexed Switch
- *TRACS:* Translations Recovery Additions Conversions System
- *TRIB:* Transfer Rate of Information Bits

- *TSI:* Time Slot Interchanger
- *TTL:* Terminating Test Line
- *TTTN:* Tandem Tie Trunk Network
- *TTY:* Teletype
- *TVA:* Trunk Verification by Attendant
- *TVVT:* Trunk Verification by Voice Terminal
- *UCD:* Uniform Call Distribution
- *UUCP:* UNIX System-to-UNIX System Copy
- *VBR:* Variable Bit-Robbed
- *VDN:* Vector Directory Number
- *VDS:* Voice Data Station
- *VFCDR:* Variable Format Call Detail Recording
- *VMAAP:* Visual Maintenance and Administration Panel
- *WATS:* Wide Area Telecommunications Service
- *WS:* Work Station

GLOSSARY

AAR

See **Automatic Alternate Routing**.

Abandoned Call

A call during which the calling party ‘‘hangs up’’ (‘‘abandons’’ the call) before the call can be connected to the called party. Often, calls are abandoned when the calling party is waiting in queue for an appropriate answering position to become available.

ACD Attendant

A member of an ACD split (usually referred to as an ‘‘agent’’).

Access Code

A 1-, 2-, 3-, or 4-digit dial code used to activate or cancel a feature. The star (*) and pound (#) are sometimes used as the first digit of these codes.

Account Code

A dialed code (used with SMDR and CDRR) that allows a call to be charged to a specific department’s (or project’s) account.

ACD Call

A call directed toward an ACD split using an associated extension number (or a published number). Since these calls enter the split’s queue, ACD calls differ from calls to an agent’s individual extension number which do not enter the queue.

ACI (AT&T Communications Interface)

The name given to ISDN/PRI on the 4 ESS* switching system. The 4 ESS is a Class 4 switch used for toll switching.

Active on a Loop

An attendant is answering an incoming call or originating a call by pressing one of six appearance buttons.

Administer

To add, remove, or change software programs or stored data that provide services or features.

Administrable Recall Button

A feature button that can be assigned as a RECALL button to those multiappearance voice terminals that do not have fixed RECALL button. These RECALL buttons can be assigned to voice terminals on System 85s beginning with R2 V2. The multiappearance voice terminals without a fixed RECALL button include: Models 7401D, 7404D, 7406D, 7407D, and 510D.

Agent

A member of an ACD (EUCD in Release 2, Version 2) split.

Agent Hold

See **Multiple Call Handling**.

Agent Queue

A ordered sequence of agents who are available for and are waiting to receive an ACD call.

---

* Trademark of AT&T.

AIOD (Automatic Identification of Outward Dialing)

The AIOD feature identifies, translates, and transmits the calling party's extension number and trunk access code to the serving switch (i.e., CO, CCSA, or EPSCS switching office). In turn, the serving switch augments, compiles, and records this call-detail information and periodically provides the information to the customer.

Alerting

Audible (ringing) and/or visible signals indicating incoming calls.

American Standards Code for Information Interchange (ASCII)

An 8-bit binary code adopted by the American Standards Association to achieve compatibility between data services. Only seven of the eight bits are used for character identification. The eighth bit is left available for use as a parity bit.

Analog

Continuous in form. Analog signals contrast with digital signals which are discontinuous, or discrete, in form.

Analog Voice Terminals

An analog voice terminal (telephone) receives acoustic voice signals and sends analog electrical signals along the line. These voice terminals are served by a single wire pair (tip and ring). The analog voice terminals include: Models 2500, 7101A, and 7103A.

Answer-Back Channel

A group of dedicated circuits which a paged party can use to answer a page.

ANI (Automatic Number Identification)

See **AIOD**.

Answer Supervision

A signal sent by System 85 to the serving CO (Central Office) indicating that an incoming call has been answered. Upon receiving this signal, the originating CO (generally) begins tracking toll charges for the call (if charges apply).

Appearance

A point of access to an extension (also known as an occurrence). Using a multiappearance voice terminal, an extension can be manually accessed by pressing a button labeled with the extension number. Indicator (status) lamps next to the button light when a terminal user places a call, receives a call, or puts a call on hold.

AP (Applications Processor)

An adjunct minicomputer to System 85.

Area Code

See Numbering Plan Area.

ARS

See **Automatic Route Selection**.

ASCII

See **American Standards Code for Information Interchange**.

Associated Extension Number

An extension number that is assigned to and correlated with another extension number in Procedure 001.

Calls to an ACD (previously, EUCD, UCD, or DDC) split are routed to the split's queue with an ''associated extension number.'' The system then distributes the calls to an available agent from the queue. Since these calls enter the split's queue, they are considered ACD (or EUCD/UCD/DDC) calls.

Asynchronous Data Transmission

Transmission in which time intervals between transmitted characters may be of unequal length. Transmission is controlled by start and stop elements at the beginning and end of each character. For comparison see *Synchronous Data Transmission*.

Attendant

The operator of an attendant console.

Attendant Console

An electronic switchboard, with pushbutton control, used by the attendant to manage calls.

Attendant Diversion to Recorded Announcement

A function of the Intercept Treatment feature. Using this function, a System 85 attendant can divert *all* attendant-seeking calls to a recorded announcement by dialing an access code.

Attendant-Extended Call

A call (usually from the public network) that routes to an attendant, and is in turn relayed (‘‘extended’’) by the attendant to an appropriate destination (e.g., a voice terminal or an ACD split). Attendant-extended calls differ from *direct attendant calls* that are *initiated* by an attendant.

Attendant Overflow

A function of the Tenant Services feature. Attendant overflow allows calls directed to an attendant partition to overflow and terminate to that partition’s overflow partition. This function operates during periods of heavy calling to attendants, or when attendant partitions are lightly staffed.

Attendant Queue

The ordered sequence of calls waiting to be answered by an available attendant from within the group of attendants. (Using a System 85, there can be as many as 40 attendants in the group.)

ATMS

See **Automatic Transmission Measurement System**.

Audit Trail

A record of Automatic Circuit Assurance referrals. This system-generated record includes the date, time of day, trunk-group access code, and trunk number. The record indicates whether the referral was for a long call or a series of short calls. Also, the record indicates whether the trunk was tested after a referral or not. The audit trail record can be retrieved using the Facilities Management feature.

Attendant-Completing Trunk

A member of an attendant-completing trunk group.

Attendant-Completing Trunk Groups

Incoming (or 2-way) groups that terminate calls to preassigned answering positions within the switch. Since the answering positions are preassigned, digits are not passed to the local switch. These preassigned answering positions include: the attendant queue (by default), an ACD queue (Procedure 115), or a VDN (Procedure 031, Word 2). (The term ‘‘attendant-completing’’ usually refers to CO, 800 Service, or FX trunk groups.)

Authorization Code

A dialed code that can override the FRL of the facility being used to place an outgoing call. Authorization Codes can also be used (in preference to the Barrier Code) to protect against unauthorized entry to System 85 on Remote Access trunks.

Automatic Alternate Routing (AAR)

This feature provides least-cost routing for private network calls by selecting, in descending order of desirability, the best route available.

Automatic Calling Units (ACU)

An automatic dialing device that permits a machine to place calls over the communications system.

Automatic Dialing

A method of using Abbreviated Dialing to place a call. With Automatic Dialing, the calling party accesses a stored number with a single button press.

Automatic Incoming Trunk

A member of an automatic incoming trunk group.

Automatic Incoming (Automatic-In) Trunk Groups

Incoming (or 2-way) trunk groups that terminate calls to preassigned answering positions within the switch. Since the answering positions are preassigned, digits are not passed to the local switch. These preassigned answering positions include: the attendant queue (by default), an ACD queue (Procedure 115), or a VDN (Procedure 031, Word 2). (The term ‘‘automatic-in’’ usually refers to the various kinds of tie trunks.)

Automatic Route Selection (ARS)

This feature provides least-cost routing for public network calls by selecting, in descending order of desirability, the best route available.

Automatic Transmission Measurement System (ATMS)

A System Management feature that automatically measures the transmission characteristics of private and public network trunk facilities.

Backup Answering Position

The second or third termination point in a coverage path.

Backup Terminal

A voice terminal used with Centralized Attendant Service (CAS) to answer calls at a branch location when the attendant at the main location is not available.

Band Width

The range of frequencies assigned to a channel or system; the difference expressed in hertz between the highest and lowest frequencies of a band.

Barrier Code

The security code that allows a remote user to access the services of the System 85 and prevents unauthorized access to the system.

Basic Rate Interface (BRI)

One of two standard ISDN frame formats. The BRI is the station direct interface to an ISDN. It consists of a 192 Kbps carrier interface organized into two 64 Kbps B (bearer) channels and one 16 Kbps D (data) channel.

Bay

Another term for ‘‘split’’ that is used by some other ACD vendors. A split (or bay) is a group of agents (group members) organized to receive calls in an efficient and cost-effective manner. Throughout this manual, the term ‘‘split’’ is used in preference to ‘‘bay.’’

BCT

See **Business Communications Terminals**.

Bearer Capability

A term used with ISDNs (Integrated Services Digital Networks) to identify the types of traffic that can be supported by a given trunk.

Bearer Capability Class (BCC)

A term used with ISDN to identify the type of trunk service required for a caller. This is part of the class-of-service for the calling party and identifies the trunk bearer capability required.

Binary Synchronous Communications (BSC or Bisync)

A data communications protocol, developed by IBM, that interfaces the AP to an IBM host computer. This protocol is used with the Terminal Emulation feature.

Bisync

See **Binary Synchronous Communications**.

Bit (Binary Digit)

Smallest unit of information in binary notation (having two possible states or values, zero or one).

Bits Per Second (bps)

The number of units of information in binary notation that are transmitted or received per second.

Bit Oriented Signaling (BOS)

A form of call control signaling that transmits information in the form of single digital bits, most commonly A & B bit signaling.

Blocking

The inability to connect the calling party with the called party. Blocking occurs when either (1) all suitable trunk paths are busy or (2) a path between a given inlet and a suitable outlet of the switching system is unavailable.

Branch Locations

Telecommunication systems served by attendants at a centralized location.

Bridged Appearance

An appearance on a voice terminal matching an appearance on another voice terminal. For every appearance on a ‘‘home’’ terminal, there can be a bridged appearance on as many as 15 other voice terminals. (The concept of is similar to the concept of ‘‘images.’’)

Bridging

The connection of one circuit in parallel with another without interrupting the continuity of the first.

BSC

See **Binary Synchronous Communications**.

Business Communications Terminals (BCT)

A family of terminals that provide the user with the ability to enter data and message information via a keyboard. The terminals are the 500 BCT, 513 BCT, and 515 BCT.

Call Appearance

A point of access to an extension (also known as an occurrence). Using a multiappearance voice terminal, an extension can be manually accessed by pressing a button on the voice terminal labeled with an extension number. Indicator (status) lamps next to the button light when a terminal user places calls, receives calls, or puts a call on hold.

Call Detail Recording and Reporting (CDRR)

The CDRR feature collects, formats, and reports switch generated call detail information using a local Applications Processor. The CDRR feature surpasses SMDR as a comprehensive and customized way of reporting call details.

Call Detail Recording Utility (CDRU)

A series of software programs that run on the 3B2 LSU to process the CDR records generated by the switch.

Call Forwarding—Off Net

A function of the Call Forwarding—Follow Me feature. Using this function, a user can forward all calls to a telephone in the nontoll public network.

Call Forwarding Override

A function of the Call Forwarding—Follow Me feature. With Call Forwarding—Follow Me active, most calls directed to the forwarding terminal forward to a specified destination terminal. Call Forwarding Override allows the user of the forwarded-to terminal to complete calls to the forwarding terminal.

Call Hold

The name of the access code that allows a single-appearance voice terminal user to access the hard hold function of the Hold feature. See **Hold**.

Call Management System (CMS)

Software routines on the AP 16 that assist in the management of ACD activity. The CMS system generates reports on ACD activity, provides real-time displays of current agent activity, and provides the customer with the ability to partially administer the ACD feature for the switch.

Call-Progress Tone

One of a set of tones (e.g., ringback tone, busy tone, or reorder tone) that a calling party can receive from a switch. Call-progress tones indicate the specific status of a call or the facilities used by the call.

Called Party

The person who receives a call.

Caller Response Interval

The administrable period of time for internal callers to respond to a call that has been redirected to coverage. During this system-wide interval (from 0 to 10 seconds) that begins with coverage tone, an internal caller could hang up, activate Leave Word Calling, or wait for the covering user to answer.

Calling Party

The person who places a call.

Carrier Ready Tone

See **Ready Tone**.

CCS (Hundred Call Seconds)

The unit with which telephone call traffic is measured. The equivalent of one call lasting for 100 seconds.

CDRR

See **Call Detail Recording and Reporting**.

CDRU

See **Call Detail Recording Utility**.

Cell

A 4-bit (1/2 byte) portion of a CDR record. Each CDR record contains four adjacent cells.

Central Office

A place where public telephone switching equipment is housed.

Central Office Trunk

A telecommunications channel on the public network between the central office and the system.

Central Processor

The part of a computer system that contains the main storage, arithmetic logic unit, and special registers.

Channel

A communications path over which voice or data is transmitted.

Chime Signals

Tone bursts sent over the loudspeaker system to page persons with the Code Calling Access feature. These 892-hertz tone bursts are combined in a coded manner to signal a specific person out of a larger group of persons.

Chimeback Tones

Tones (resembling chime signals) sent to the paging party's voice terminal by the System 85 switch. These tones are used to confirm that chime signals are being sent over the loudspeaker system.

Class of Service (COS)

A numeric code that specifies a group of features and calling privileges that together determine the calling privileges of a group of extension numbers.

Cluster

A group (2 or more) of individual nodes connected by DCIU links and tie trunks into a DCS network.

CMS

See **Call Management System**.

Collision

See **Glare**.

Common Control Switching Arrangement

A private telecommunication network using dedicated trunks and a shared switching center for interconnecting company locations.

Confirmation Tone

Three short bursts of tone provided by the System 85 switch to confirm that a feature has been accepted or canceled.

Control Vectors

Another term for ‘‘Call Vectoring’’ that is used by some other ACD vendors. Call Vectoring (or the similar concept, Control Vectors) provides an enhanced method of defining calling-party interfaces for incoming calls (usually incoming ACD calls). Throughout this manual, the term ‘‘Call Vectoring’’ is used rather than ‘‘Control Vectors.’’

Controlling Terminal

For ACD, the terminal within an assigned ACD (previously, EUCD/UCD/DDC) group that is used to activate or deactivate functions for the group.

Conversion Resource

The combination of a TDM (Trunk Data Module) and a modem that converts DCP (Digital Communications Protocol) data signals from digital format to analog format suitable for transmission over analog trunk facilities. The reverse conversion (analog to digital) is also provided. This term is used primarily with the Modem Pooling feature.

Coverage Call

A call that is redirected from the called extension (the principal) to another extension.

Coverage Group

The combination of a principal, the principal’s coverage path(s), and the associated criteria. A dual-path coverage group contains two paths and criteria.

Coverage Module

An optional attachment to the 7205H or the 7405D voice terminal. Coverage modules provide 20 additional appearance buttons for these voice terminals, and are usually used by covering users. The C201A coverage module attaches to the 7205H, and the C401A module attaches to the 7405D.

Coverage Path

An ordered sequence of up to three answering positions (points) to which coverage calls are redirected.

Coverage Point

An extension designated as an alternate answering position in a coverage path.

Coverage Tone

A call-progress tone, also known as Coverage Redirect Feedback, that indicates to a calling party that the coverage process is being started for the call.

Covering User

A person authorized to answer redirected calls at a coverage point.

Criteria

Used with the Call Coverage feature, the conditions under which a call to a principal is redirected to coverage.

Customer-Provided Equipment (CPE)

Customer-owned equipment that is not provided as part of the system but is to be connected to it.

Cut-Through Connection

An attribute of outgoing calls that are not automatically routed (e.g., using AAR or ARS). Cut-through connections are established between local and distant switches whereby the local switch sets up a talking connection to the distant switch and then relinquishes control of the call to the distant switch. At this time, the distant switch may return dial tone for subsequent dialing and call routing.

Data Channel

The means of transmission and the intervening equipment involved in the transfer of information in a given direction.

Data Communications Access

The feature that provides access to on-premises host computers for data end points with an analog interface (modem). These end points include analog voice terminals and attendant consoles.

Data Communications Equipment (DCE)

The equipment that provides the functions required to establish, maintain, and terminate a connection, the signal conversion, and coding required for communication between DTE (Data Terminal Equipment) and data circuit. Any equipment that connects to a data terminal device using an EIA RS-232C interface.

Data Communications Interface Unit (DCIU)

A circuitry configuration that provides interprocessor communication between switch processors or between a switch processor and another processor.

The DCIU is used between switches in a DCS cluster, between a switch and an Applications Processor, or between a switch and an AUDIX system.

Data Link

The configuration of physical facilities enabling end terminals to communicate directly with each other.

Data Path

The complete connection (end-to-end) used for a data communications link (see also Virtual Circuit). This term is used for the combination of all elements used in an interprocessor communication in the DCS feature.

Data Module

A device that interfaces customer-provided data equipment to the System 85 equipment.

Data Port

A point of access to a computer that uses trunks or lines for sending or receiving data.

Data Protection

The feature that prevents intrusions by bridge-on features (e.g., Call Waiting, Override, and Busy Verification of Lines) into data transmissions. The bridge-on features, if allowed, would disrupt a data transmission by inserting a warning tone into the connection. Two forms of Data Protection are available: temporary and permanent. Temporary data protection is activated with an access code and permanent data protection is assigned to a line class of service.

Data Rate

The transmission of data measured in bits per second.

Data Service Unit (DSU)

A device designed specifically to transmit digital data on transmission facilities.

Data Set

A term sometimes used for *modem*. A device that converts data communications between a digital (i.e., RS232C) format and an analog format. These terms (data set and modem) are used interchangeably in this manual.

Data Supportable Tie Trunk (DSTT)

A tie trunk that can support data rates greater than 300 bps.

Data Terminal

An input/output device [with a keyboard and a CRT (cathode ray tube)] that has either switched or direct access to a host computer (or to an AP). The AT&T data terminals include: The AT&T Personal Terminal 510D, and Models 500, 513, and 515 BCT (Business Communications Terminal).

Data Terminal Equipment (DTE)

1) The equipment comprising the data source, data destination, or both. A data endpoint such as a data terminal or line printer.
2) The configuration of leads and control devices (and logic) specified by a protocol that complements the *Data Communications Equipment (DCE) for the same protocol.*

Data Tone

See **Ready Tone**.

Datagram

A data communications technique that does not involve 2-way or even direct connections between the two endpoints. It is analogous to a letter being delivered by a postal service. The data is submitted to the system and later delivered to its destination. There is no direct connection between the sender and destination.

DCIU

See **Data Communications Interface Unit**.

DCIU Link

A hardware communications link (data link) that connects two DCIUs.

DCIU Network Channel

The association between two link/logical channel pairs such that a DCIU message received on one link/logical channel pair is transmitted on the other pair. There are two types of network channels, fixed or PVC (Permanent Virtual Circuit) and alternate routing.

DCIU Port

A gateway to or from an application (DCS is an example of an application). Ports are the endpoints of a virtual circuit and look like an input/output device to the application.

DCS

See **Distributed Communications System**.

DCS Cluster

Two or more switches interconnected by DCIUs.

DCS Node

A switch within a DCS cluster.

Default Voice Terminal

A preassigned voice terminal to which calls can be routed when the attendant console is unattended.

Delay Dial Signaling

A trunk signaling protocol that provides a waiting period for the far end of a trunk connection to respond before the near end outpulses digits. See Appendix F, Enhanced Trunking, for more information on trunk signaling protocols.

De-multiplexer

A device or circuit used to separate two or more signals that were previously combined on a single carrier medium. The de-multiplexor must be associated with a compatible multiplexer.

Designated Voice Terminal

The forwarded-to voice terminal (i.e., the specific voice terminal to which calls, for a certain extension, are forwarded).

Dial Pulse Addressing

A means of signaling consisting of regular momentary interruptions of a current path at the sending end. The number of these interruptions corresponds to the value of a digit or character. This method of address signaling is usually associated with rotary dial terminals. However, this method of signaling can also be used between switches.

Dial Repeating Tie Trunk

A telecommunications channel between two systems. The number dialed is ‘‘repeated’’ (or dialed-in) at the distant end.

Digit-Oriented Routing

A method of routing calls into the System 85 switch. Using digit-oriented routing, dialed digits are passed through the serving switch (usually, the serving CO) and to the local System 85 in a similar manner to DID calls.

Digital

Discrete, or discontinuous, in form. Digital signals contrast with analog signals which are continuous in form. Digital signals are usually binary.

Digital Communications Protocol (DCP)

A protocol used to transmit both digitized voice and data over the same communications link. [A System 85 data link made up of two information channels and one signaling channel.]

Digital Data

Data represented in discrete, discontinuous form, usually binary. This is in contrast to continuous analog data usually sine wave form.

Digital Service-1 (DS1)

A high-speed, high-volume digital trunking facility.

Digital Terminal Data Module (DTDM)

A data module designed as a plug in module for a digital voice terminal.

Digital Trunk

A circuit in a telecommunications channel designed to handle digital data.

Digital Voice Terminal

A voice terminal (telephone) that converts acoustic voice signals (analog signals) into digital electrical signals to be sent along the line. These voice terminals are served by two pairs of wire. The digital voice terminals include: Models 7401D, 7403D, 7404D, 7405D, 7406D, 7407D, 510D, and 515 BCT.

Direct Attendant Call

A call that is *initiated* by an attendant. Direct attendant calls differ from *attendant-extended calls* that are initiated elsewhere (usually from the public network), and extended by an attendant to an appropriate destination.

Direct Distance Dialing

Long distance calls completed without operator assistance.

Direct Extension Selection

An option on an attendant console which allows an attendant direct access to an idle voice terminal (inside the system) by pressing a hundreds button and a tens and units button.

Disconnect Supervision

A signal sent by the serving switch to the local System 85 indicating that an ‘‘answered call’’ was hung up at the distant end. Depending on the type of serving switch, a delay of from 2 to 25 seconds can precede this signal.

Display Voice Terminal

A voice terminal with display capabilities. The display voice terminals include: 7404D (with Z300B messaging cartridge and EIA terminal), 7405D (with D401A display module), 7407D, 510D, and 515 BCT.

Distant

Pertaining to, or within, the physical limits of another network node [from the perspective of the local (or serving) switch].

Distributed Communications Service (DCS)

A network of switches appearing to the user as a single switch.

Don't Answer Interval

The specified number of times that unanswered voice terminals can ring (number of alerting cycles) before a call is redirected to coverage or forwarded.

Duplicated Switch

A switching system that contains backup processing equipment. A ''high-reliability'' switch contains backup common control processors. A ''critical-reliability'' switch contains backup common control processors, module processors, and TMSs (Time Multiplexed Switches).

DXS Button

One of a set of 100 buttons, arranged as 2 groups of 50 buttons, engraved with a number (from 00 to 99) on the type 34 console. When DXS is assigned, an attendant can select an extension (e.g., 1356) by pressing the appropriate hundreds group selection button (for this example, the one assigned as ''13'') and then pressing the appropriate DXS button (for this example, ''56''). When Extended DXS is assigned, however, the attendant can select an extension by pressing two DXS buttons in sequence (for this example, ''13,'' followed by ''56''). When Extended DXS is assigned, the hundreds group selection buttons do not function.

E&M (Ear and Mouth) Supervision

A symmetric signaling scheme using dc voltage levels over ''E'' and ''M'' interface leads. The E and M leads are separate from the transmission path. The signals are used to indicate on-hook and off-hook states at each end of the connection path. See Appendix F, Enhanced Trunking, for more information on trunk signaling protocols.

Electronic Document Communications (EDC)

A group of services provided by the AP 16 that allows users to prepare, manage, and exchange information. One of these services is a form of electronic mail.

Electronic Tandem Network (ETN)

A private telecommunications network configured with electronic tandem switches. It interconnects customer locations via dedicated intertandem tie trunks, access trunks, and bypass trunks.

Emulation

A technique using software programming that allows one computer or digital device to behave like a different device.

Enhanced Private Switched Communications Service (EPSCS)

A private network service that provides advanced voice and data communications services for companies with widespread operations.

Equipment Location

The location, or the corresponding numerical representation of the location, of a circuit within the switch. Equipment locations are represented by 7-digit numbers (e.g., 01 2 3 12 0). The first and second digits identify a module. The third digit identifies a cabinet within the module. The fourth digit identifies a carrier within the cabinet. The fifth and sixth digits identify a slot within the carrier. The seventh digit identifies a circuit of the slot's circuit pack.

Extended Digital Subscriber Line (EDSL)

The name used for the ISDN/PRI feature (network interface) on the 5ESS switching system. The 5ESS is used for COs (Central Offices) and large PBX (Private Branch Exchange) applications.

Extension Number Steering

An attribute of the Main/Satellite feature. The Main/Satellite switches use the initial digit(s) of a dialed extension number to steer the call to the appropriate switch. The call is then routed to its final destination.

Facilities Restriction Level (FRL)

An assigned number that determines both the types of calls that can be made and the types of facilities (trunks) that can be used.

Facsimile

A process, or the result of a process, where fixed graphic material is scanned and the information converted into electrical signal waves to produce a likeness or copy.

Feature

A specifically defined function or service provided by System 85.

Feature Key Module

See **Function Key Module**.

Feature Button

A labeled button designating a specific feature.

Fiber Optics

A technology using light-guide materials and ultra-wide band electromagnetic wave forms for high-capacity carrier systems.

Final Effective Step

A ‘‘final effective (vector) step’’ is either the last vector step or a vector step that is followed by a ‘‘stop’’ step.

Flash

A momentary press of (noun) [or to momentarily press (verb)] the switchhook on an analog voice terminal. Switchhook flashes can have a duration of from 0.2 seconds to 1.2 seconds. A shorter press would not be detected, while a longer press would cause the voice terminal to disconnect.

Flash Button

Another term for ‘‘recall button’’ that is used by some other switch vendors. After a recall button press (or flash button press) the switch returns recall dial tone to the voice terminal user. Throughout this manual, the term ‘‘recall button’’ is used in preference to ‘‘flash button.’’

Flexible Routing Selection (FRS)

Another term for ‘‘ARS’’ (Automatic Route Selection) that is used by some other switch vendors. ARS (or the similar concept, FRS) provides least-cost routing of public network calls. Throughout this manual, the term ‘‘ARS’’ is used in preference to ‘‘FRS.’’

Foreign Exchange (FX)

A central office other than the one located in the calling customer area.

Foreign Exchange Trunk

A telecommunications channel that connects a private telephone system to a central office other than its own central office.

Forwarded-To Voice Terminal

The designated voice terminal (i.e., the specific voice terminal to which calls, for a certain extension, are forwarded).

Frame

One of several segments of an analog or digital signal that has a repetitive characteristic. Corresponding elements of successive frames represent the same thing. The specific nature of a frame varies depending on the context in which the term is used.

- In a time-division system, a frame is a sequence of time slots, each containing a sample from one of the channels served by the system.
- In DS1 signaling, a frame is the digital representation of the 24 logical channels represented by 192 bits of data. An additional bit is included for framing making a frame 193 bits long.
- In D4 signaling, the framing format includes 12 frames.
- In extended super framing (Fe), the framing format includes 24 frames.
- In packet switched data communications, a frame incloses a ‘‘packet’’ by adding a header and a trailer element for additional control purposes (See the ‘‘Packet’’ and ‘‘Packet Switching’’ definitions for further details).

Full Duplex

A transmission system capable of carrying signals in both directions simultaneously.

Function Key Module

An optional attachment for the 7205H or the 7405D voice terminal. Function key modules provide 24 additional feature buttons for these voice terminals.

Gate

Another term for ‘‘split’’ that is used by some other ACD vendors. A split (or gate) is a group of agents (group members) organized to receive calls in an efficient and cost-effective manner. Throughout this manual, the term ‘‘split’’ is used in preference to ‘‘gate.’’

General Purpose Port (GPP)

A port used for either a digital voice terminal or a data module. The GPP uses the digital communications protocol and can be used as either a line or trunk appearance.

General Trade (GT)

Commercially available materials and equipment that are not restricted to a single manufacturer or to manufacture under license.

Ghost Call

A queued incoming call that is directed to an idle answering position even though the calling party has already abandoned the call. Abandon call search can be used with the ACD (previously, EUCD) feature to minimize the occurrence of ghost calls.

Glare

A fault condition in trunk seizure operations where both ends of a trunk attempt to seize the same connection at the same time. See Appendix F, Enhanced Trunking, for more information on trunk signaling protocols.

Ground Start Supervision

A supervisory signal given at certain terminals and switches by connecting one side of the line or trunk to ground. Ground start signaling was introduced in trunk signaling to minimize glare. See Appendix F, Enhanced Trunking, for more information on trunk signaling protocols.

Group Number

Software packages before R2 V2 allow for as many as 28 UCD/DDC groups. In Procedure 025, Word 1, the ‘‘group number’’ (a number between 1 and 28) is used to uniquely identify the individual groups. These same group numbers are used in Procedure 011, Word 1 to specify a UCD/DDC group which is used as the final point in a coverage path.

Half Duplex

Transmission of signals in either direction but not both directions simultaneously.

Handshaking Logic

Logic circuits used to establish a data connection between two devices.

Hard Disk

A rigid magnetic platter used to store data.

Hard Hold

One of the two forms of hold provided by the Hold feature. Hard hold is more durable than soft hold, providing greater assurance of being able to return to the held call. Hard hold is available for multiappearance voice terminals (using the HOLD button) and for single-appearance voice terminals (using the Hold dial access code).

Hard Processor Swap

An attribute of a duplicated System 85. During a ‘‘hard swap,’’ the switch abruptly shifts control from one processor to the other ‘‘healthier’’ processor. Since the current call-status information is not transferred to the new processor, hard processor swaps are usually noticed by users who are active on a call. (See also **Soft Processor Swap**.)

Hard-Wired

Permanently connected [as opposed to a temporary (switched) connection].

Head of Queue

The first item (e.g., a call or an agent) in a queue. The item at the head of queue is usually the next item to be processed.

Hertz

A unit of frequency equal to one cycle per second.

Hold

A feature provided for System 85 voice terminal users. The Hold feature allows the user to separate from an active call, while retaining the ability to return to the call. There are two forms of hold: hard hold and soft hold. Hard hold is more *durable* than soft hold, providing greater assurance of being able to return to the held call. Hard hold is available for multiappearance voice terminals (using the HOLD button) and for single-appearance voice terminals (using the Hold dial access code). Soft hold is only available for single-appearance voice terminals (using the switchhook or the RECALL button).

Home Numbering Plan Area (HNPA)

The dialing plan area (area code in the public network) within which a private network switch is located.

Homing

The connection of a subtending switch to a tandem switch based on factors such as traffic loads, geographic proximity, and community of interest.

Hookswitch

See **Switchhook** or **Recall Button**.

Hop

Nondirect communication between two DCIUs, whereby the DCIU message passes through one or more intermediate DCIUs.

Host Computer

A computer connected to the network that processes data from various data-entry devices.

Hub

The central or controlling switch in a ‘‘STAR’’ networking configuration.

Hundred Call-Seconds (CCS)

The unit with which telephone call traffic is measured. One call that lasts for 100 seconds constitutes 1 CCS.

Hundreds Group Selection Button

One of 18 assignable buttons (arranged horizontally as three rows of six buttons) on the type 34 console. When DXS is assigned, an attendant can select an extension by pressing the appropriate hundreds group selection button and then pressing the appropriate DXS button. When Extended DXS is assigned, the hundreds group selection buttons don’t function.

Hybrid Voice Terminal

Hybrid voice terminals (telephones) possess characteristics of both analog and digital voice terminals. Like analog voice terminals, hybrid voice terminals send analog electrical voice signals. However, like digital voice terminals, hybrid voice terminals are controlled by digital signals. These voice terminals are served by three pairs of wire. The hybrid voice terminals include: Models 7203H, 7205H, 7303S, and 7305S.

I-Field

A channel used for communicating digital information for voice and data.

I-Use Lamp

An indicator lamp on a multiappearance voice terminal that indicates whether or not a particular appearance is in use.

ID/Password

A security measure that limits access to those with the correct ID and password.

Idle Loop

An inactive appearance on the attendant console.

Image

A point of access to an appearance. There can be as many as 16 images of an appearance. An unshared appearance has only one image of the appearance. (The concept of an ‘‘image’’ is similar to the concept of a ‘‘bridged appearance.’’)

Immediate Start Signaling

A trunk signaling protocol in which the receiving switch (incoming end of a trunk seizure) has 0.07 seconds to respond to the incoming seizure. See Appendix F, Enhanced Trunking, for more information on trunk signaling protocols.

Individual Extension Number

Agents in an ACD (previously, EUCD/UCD/DDC) split have ‘‘individual extension numbers’’ and are allowed to receive calls directly on these numbers. Since calls to an individual extension number do not enter the split’s queue, they are not considered ACD calls.

Integrated Services Digital Network (ISDN)

A network ‘‘that provides end-to-end digital connectivity to support a wide range of services, including voice and nonvoice service to which users have access by a limited set of standard multipurpose user-network interfaces.’’ CCITT

Intelligent Terminal

A data terminal containing a microprocessor to reduce the data transmitted and to expand the data received.

Intercept Tone

An alternating high and low tone; indicates a dialing error or denial of the service requested.

Interface

A common boundary between two systems or pieces of equipment.

Interflow

The forwarding of calls from an ACD (previously, EUCD) split to another node of the network (also known as Overload Balancing).

International Standard Organization (ISO)

An agency of the United Nations, given the responsibility for establishing and coordinating common standards between member nations.

Interworking

The term used with ISDN to refer to the processes by which ISDN and non-ISDN services interconnect and work together.

Intraflow

The forwarding of calls from an ACD (previously, EUCD) split to a destination within the local system.

Intrusion Tone

A 440-hertz tone applied by System 85 during a call. Intrusion tones are used to alert the talking parties to the presence of an unexpected party in the connection. The features that are able to provide an intrusion tone include: ACD (Automatic Call Distribution), Busy Verification of Lines, EUCD (Enhanced Uniform Call Distribution), Override, Trunk Verification—Attendant, and Trunk Verification—Voice Terminal.

Least Cost Routing (LCR)

Another term for ‘‘ARS’’ (Automatic Route Selection) that is used by some other switch vendors. ARS (or the similar concept, LCR) provides least-cost routing of public network calls. Throughout this manual, the term ‘‘ARS’’ is used in preference to ‘‘LCR.’’

Leave Word Calling Administrator

A person authorized to access messages for anyone on the system.

Leave Word Calling Without an AP

Leave Word Calling messages can be stored on the switch, on an AUDIX system, or on an AP (Applications Processor). Leave Word Calling without an AP refers to message storage on the switch or on an AUDIX system. That is, the messages are not stored on an AP.

Line Port

The actual hardware providing the access point to the system switching network for each circuit associated with an extension.

Link Access Procedure (LAP)

A group of standards (LAP, LAPB, LAPD, etc.) adopted by the CCITT for the link level protocols used with CCITT standards such as X.25 and ISDN. The CCITT LAP standards are generally modeled after the various ISO recommendations for HDLC (High-level Data Link Control).

Listed Directory Number (LDN)

The listed number in a public directory (phone book) for a private switching system that is usually answered by an attendant.

Local

Pertaining to, or within, the physical limits of the serving switch.

Local Area Data Set (LADS)

A modem, specifically the 48230 and 48234, manufactured by Codex Corporation, These data sets support synchronous data transmission at selectable rates of 2.4, 4.8, and 9.6 Kbps. They offer good noise immunity.

Local Area Network (LAN)

A networking arrangement specifically designed to support a limited geographical area. Generally, they are limited in range to a maximum of 6.2 miles and provide high-speed carrier service with low data error rates. Common configuration include: star (included circuit switched), ring, and bus.

Local Distribution Service Unit (LDSU)

A modem that supports synchronous data transmission at selectable rates of 2.4, 4.8, and 9.6 Kbps.

Local Storage Unit (LSU)

A device that collects and stores CDR records. Usually, an LSU temporarily stores records that are periodically requested by a central polling device.

Logical Channel (or Circuit)

A message slot on a digital communications link. One of the logically independent elements of a data stream that are multiplexed onto a single communications carrier. This term is used in connection with ‘‘packet switching’’ and to refer to a designated subelement of a DCIU link. In the DCIU application, a logical circuit on the ‘‘switch link’’ is called a ‘‘port.’’

Long-Holding Time

A measurement of call length on selected trunks; occurs automatically when the Automatic Circuit Assurance (ACA) feature is activated.

Loop

A voice circuit associated with an appearance button on the console, used by the attendant to process or originate calls.

Loop Start Supervision

A supervisory signal initiated by a terminal or switch in response to completing the loop current path. See Appendix F, Enhanced Trunking, for more information on trunk signaling protocols.

LSU

See **Local Storage Unit**.

MAAP

Maintenance and Administration Panel. This device is used by the vendor's service technicians to completely administer the System 85.

Main Location

A centralized area where attendants answer calls routed from branch locations.

Main Split

The split to which a call controlled by vector processing is initially directed. Vector processing always queues calls to this split unless the split is not staffed.

Main/Satellite

A Main/Satellite complex is a private network configuration. This configuration can either stand alone or access an ETN (Electronic Tandem Network). The trunk facilities that access the public network and attendant positions are usually concentrated at the main.

Manual Dialing

Using the touch-tone dialing pad (or rotary dial) to place a call. The calling party dials each digit of the called number individually. Manual dialing contrasts with Automatic Dialing where a single button press outpulses a set of stored digits.

Measured Agent

A member of an ACD split whose activity is measured by CMS (Call Management System).

Measured Split

A group of ACD agents whose activity is measured by CMS (Call Management System).

Message Center

A service that provides for answering of calls that would otherwise go unanswered, accepts and stores messages for later retrieval.

Message Center Agent

A person with membership in a Message Center split. Message Center agents take and retrieve messages for voice terminal users.

Message Oriented Signaling (MOS)

Call related signaling over a D (Data) channel that takes the form of a set of standard messages rather than bit signals. Used with ISDN.

MIA Distribution

See **Most Idle Agent Distribution**.

Modem Pooling

A feature that provides shared ‘‘conversion resources’’ (modems plus data modules) for cost-effective access to analog facilities by data terminals. When needed, a conversion resource is inserted into the path of a data call. This feature serves both outgoing and incoming calls.

Modular Trunk Data Module (MTDM)

A digital interface device that provides the interface for DCP (Digital Communications Protocol) connections to trunk facilities. It is used between off-premises private line trunk facilities and the System 85 switch, and for connections to DDD modems as the DCP member of a Modem Pooling conversion resource. The MTDM provides conversion between the RS-232C protocol and the DCP protocol (see also Trunk Data Module).

Most Idle Agent (MIA) Distribution

A call-distribution routine provided by the ACD (Automatic Call Distribution) feature that distributes an ACD call to the ‘‘most idle’’ agent. An available agent who has not been active on an ACD call for the longest time is considered the most idle agent.

Multiappearance Voice Terminal

A terminal equipped with several appearance buttons for the same extension number. This allows the user to handle more than one call, on the same extension number, at the same time. The multiappearance voice terminals include: Models 7203H, 7205H, 7303S, 7305S, 7401D, 7403D, 7404D, 7405D, 7406D, 7407D, 510D, and 515 BCT.

Multibutton Voice Terminal

A terminal equipped with multiple buttons to access and cancel features. These buttons can be either feature buttons or Abbreviated Dialing buttons (using access codes as the stored numbers). The multibutton voice terminals include: Models 7103A Fixed Feature, 7103A Programmable, 7203H, 7205H, 7303S, 7305S, 7401D, 7403D, 7404D, 7405D, 7406D, 7407D, 510D, and 515 BCT.

Multidigit Steering

A form of Extension Number Steering. This form of Main/Satellite steering uses two or more digits to route a call to the appropriate switch. The call is then routed to its final destination.

Multiple Call Handling

A function of the R2 V4 ACD feature that is primarily intended for Message Center agents. Multiple call handling, when assigned to a split, allows an ACD agent to place a call on hold (using the HOLD button) and remain available to receive ACD calls.

Multiplexer

A device for simultaneous transmission of two or more signals over a common transmission medium.

Network

Two or more interconnected switching systems.

Network Channel

See DCIU Network Channel.

Node

A switching or control point for a network. Nodes are either tandem (receive signals and pass them on) or terminal (originate or terminate a transmission path).

Nonanalog Voice Terminals

Hybrid and digital voice terminals.

Numbering Plan Area (NPA)

A geographic division within which telephone numbers are assigned to a common public network area code. Another name for NPA is area code.

Observer

A person who is allowed to monitor the call-handling activity of ACD (or EUCD) agents. The service observing and/or agent override functions provide this capability. Often, split supervisors observe an agent's performance for training purposes. During training, inexperienced agents can also benefit by observing experienced agents handle difficult calls. To maintain courteous and efficient handling of calls, observers (outside the split) can also be appointed to evaluate the ongoing performance of agents.

Occurrence

A point of access to an extension (also known as an appearance). Using a multiappearance voice terminal, an extension can be manually accessed by pressing a button on the voice terminal labeled with an extension number. Indicator (status) lamps next to the button light when a terminal user places calls, receives calls, or places a call on hold.

Octet

The international (CCITT) term for an 8-bit data element. Equivalent to the term ''byte'' more commonly used in the United States.

Off-Hook

A term signifying that the voice terminal handset has been lifted.

On-Hook

A term signifying that the voice terminal handset has been replaced on the switchhook (hung up).

Opcode (Operation Code)

In some CDR record formats, a 4-bit (1-cell) code placed in the left-most cell position of each word. Certain CDR peripherals use the opcode as an end-of-record identifier.

Originating (Only) Appearance

One of the two kinds of appearances assigned in Procedure 052, Word 1: terminating/originating and originating (only). An originating (only) appearance of (or, point of access to) an extension is reserved for placing calls.

Normally, calls placed to an extension are not allowed to terminate to an originating (only) appearance. For most of these calls (without some type of redirection active), the switch returns busy tone to the calling party when every terminating/originating appearance is busy. However, priority calls and override calls *can terminate* to originating (only) appearances. With Priority Calling, this operation is considered preferable to returning busy tone for an important call. With Override, this operation is considered preferable to an unnecessary entry into an active appearance.

Originating Register

A temporary software record that contains necessary information for System 85 call processing.

Overflow Partition

An attendant partition that is assigned in Procedure 270, Word 2 to receive excess incoming calls from another attendant partition. Any attendant partition (from 0 to 40) can be assigned as an overflow partition in a partitioned System 85.

Overload Balancing

The forwarding of calls from an ACD (previously, EUCD) split to another node of the network (also known as Interflow).

Packet

As used in data communications, a packet is a group of bits including a message element (data) and control information element (header) that is used in packet switching and transmitted as a discrete unit. Within each packet, the message elements and control information elements are arranged in a specified format. In many systems, the packet is further encapsulated with additional header and trailer elements to form what is called a ''frame.'' (See the following ''Packet Switching'' definition and the BX.25 Protocol discussion in the DCS feature for further details).

Packet Switching

A digital transmission technique that sends addressed packets over logical circuits or channels multiplexed onto a common carrier medium. Packet switching is designed to make more efficient use of high speed carriers by multiplexing or sharing these facilities between multiple users and applications. When properly implemented, packets or frames travel on the shared carrier, with each packet being separate and independent from the packet that precedes it or follows it.

A protocol is used that ensures proper sequencing of delivered packets at a common destination, and addressing is used in a header element to distinguish between multiple destinations on the common carrier. The international standard for packet switching is the CCITT X.25 protocol. The BX.25 protocol is the AT&T implementation of X.25. AT&T commonly uses the BX.25 protocol for internal communications between digital control elements of AT&T systems.

Paging Trunk

A telecommunications channel used for accessing an amplifier (loudspeaker paging).

Parallel Data

Data bits that are processed or transmitted simultaneously.

Partition

To separate or divide a switch into discrete functional parts (verb). One of the discrete functional parts of a ''partitioned switch'' (noun).

Path Name

A ''command path,'' formed as a specific series of entries, which is used to access the desired FM or TCM screen (form). Throughout this volume, path names are listed in their complete, unabbreviated forms. However, for easy access to the screens, unique abbreviated versions of the path names may be entered.

Permanent Seizure

In trunk signaling, a trunk state in which the distant switch seizes a trunk but does not respond to normal signaling (disconnect supervision) or is maintenance busied out.

Permanent Virtual Circuit (PVC)

A fixed network channel assigned for communications between two DCIUs. A permanently dedicated (administered) circuit communicating between two DCIU ports.

Pickup Group

A group of individuals authorized to answer any call directed to a voice terminal extension number within the group.

Ping Ring

See **Ring Ping**.

Port

A point of access to the system or to a computer that uses trunks or lines for transmitting or receiving voice or data.

Precursor Tone

A special function tone used with the Remote Access feature on selected long distance trunks to perform echo suppressor control. The precursor tone is a high pitched (2220-hertz) tone that lasts for 0.4 seconds and precedes standard dial tone. It is used during the call-setup dialing sequence on certain Remote Access trunk connections where transmission distances are likely to exceed 1200 miles.

Prefix

Any digit dialed before the destination code. Prefixes are used to place a destination code in proper context, to indicate service options, or both.

Primary Covering User

The first answering position in a coverage path when a call is redirected to coverage.

Primary Rate Interface (PRI)

The switch interface to an ISDN, as specified by the CCITT. A 1.544 Mbps interface organized into 24 time slots of 64 Kbps each (23 bearer channels and 1 data channel). A specific adaptation of the DS1 signaling format.

Principal (User)

A person whose calls are redirected to a covering user.

Private Network

A network accessible exclusively by the customer for the handling of telecommunications needs.

Processor Data Module (PDM)

A device providing a DCE interface for connecting to data terminals, Application Processors, and host computers. It also provides a DCP interface for connection to the switch. It supports the downloading function of the Terminal Emulation feature between the AP and the 515 BCT. It provides protocol conversion between the RS-232C protocol and DCP.

Protocol

A set of conventions or rules mutually understood and accepted by the parties involved. Protocols are the rules governing format and timing of message exchanges to control data transfer and correction of errors.

Public Network

A network which is commonly accessible for local or long distance calling.

Q.921

See ‘‘Recommendation Q.921.’’

Q.931

See ‘‘Recommendation Q.931.’’

Queue

An ordered sequence of items (e.g., outgoing trunk calls, incoming ACD calls, or ACD agent positions) waiting to be processed.

Queue Directory Number (QDN)

The first associated extension number of an ACD (previously, EUCD) split. A split’s QDN is assigned in Procedure 026, Word 2. The QDN is also associated with the split supervisor’s individual extension number in Procedure 001.

Queue-Status Display

A function of the ACD and Call Vectoring features. When an ACD agent has a display terminal and the class-of-service assignment, information regarding the split’s queue is provided to the agent on an automatic or on-demand basis. This information includes: the number of calls currently in the split’s queue (ACD and Call Vectoring) and the amount of time the oldest queued call has waited (Call Vectoring).

Queuing

The process of placing calls in an ordered sequence. The Queuing feature orders outgoing calls that are waiting for an idle trunk. Whereas, the ACD feature places incoming calls in queue to wait for an idle agent.

Radio Paging Trunk

A telecommunications channel used to access paging transmitter equipment.

Random Access Memory (RAM)

A storage arrangement that permits information elements to be addressed directly, independent of the location of the information in storage. Also, commonly used as a misnomer for Read Write Memory that offers the same form of direct addressing.

Read Only Memory (ROM)

An electronic memory device that is permanently recorded during the manufacturing process. It provides protected memory storage with no provisions for erasing or writing over its contents.

Read Operation

The process of retrieving information from memory.

Ready Tone

A steady tone received when a data connection is ready for completion. Ready tone is also known as ‘‘carrier ready tone’’ or ‘‘data tone.’’

Recall Button

A standard button provided with many System 85 voice terminals. The functionality of the Recall button differs between single-appearance and multiappearance voice terminals. When the Recall button is provided on single-appearance terminals (i.e., 2500 and 7103A), the switch provides Recall Signaling (returns recall dial tone) when the Recall button is pressed during an active call. The Recall button on single-appearance terminals is also used with the Attendant Recall, Call Park, Conference—Attendant Six Party, Loudspeaker Paging Access, and Serial Calls features.

The Recall button has limited functionality on multiappearance terminals. This button is used with the Attendant Recall, Call Park Conference—Attendant Six Party, Loudspeaker Paging Access, and Serial Calls features. The Recall Signaling operation is not provided for multiappearance terminals. Instead, the Hold, Conference, and Transfer operations are performed using fixed feature buttons provided with the voice terminal.

Recall Dial Tone

Confirmation tone followed by dial tone. The confirmation tone confirms acceptance of a requested feature and the dial tone allows subsequent dialing to proceed.

Recommendation Q.921

The CCITT recommended standard of the ISDN Levels 1 and 2 (Physical and Link Level) protocol.

Recommendation Q.931

The CCITT recommended standard of the ISDN Level 3 (Network Level) protocol.

Recursive

In software programming, a function is ‘‘recursive’’ if the function contains a call on itself. Intraflow—All is a recursive function of the ACD and the EUCD features.

Redundant Switch

See **Duplicated Switch**.

Register

A short-term storage circuit having a capacity (usually) of one computer word.

Release Link Trunk (RLT)

A telecommunications channel used with Centralized Attendant Service to connect attendant-seeking calls from a branch location to the main location.

Remote Access Trunk

A telecommunications channel used by an authorized user to gain access to the system.

Remote Maintenance, Administration, and Traffic System (RMATS)

A centrally located system that can remotely provide maintenance, administration, and traffic (calls) measurement for the System 85 or other similar equipment.

Reorder Tone

Fast busy signal; indicates that the necessary facilities are busy. This tone also serves as the default form of Intercept Treatment for incoming calls from the public network.

Reverse Battery Supervision

A supervisory signal used by 1-way trunks that uses open and close signals from the originating end and reversals of battery and ground from the terminating end. See Appendix F, Enhanced Trunking, for more information on trunk-signaling protocols.

Ring Ping

An attribute of the Call Forwarding—Follow Me feature. Just before forwarding a call, System 85 applies ring ping, a quick burst of ringing (0.1 seconds), to remind the forwarding party that unconditional forwarding is in effect.

An attribute of the Send All Calls function of the Call Coverage feature. Just before unconditionally redirecting a call, System 85 can apply ring ping, a quick burst of ringing (0.1 seconds), to remind the principal that Send All Calls is in effect.

Ringback Queuing

The process by which a caller is placed in queue, hangs up, and is called back when an outgoing trunk becomes available.

Ringback Tone

Tone provided by the System 85 switch to confirm that the voice terminal on the other end of the line is ringing.

Ringing Cycle

Voice terminal ringing followed by the silence before the next ring. The duration of a ringing cycle is approximately 5.2 seconds (1.2 seconds of ringing and 4.0 seconds of silence). Before redirecting calls that are placed to an unanswered voice terminal, System 85 counts these ringing cycles as a way of timing the don’t answer condition.

RNX

The location code for a private network switch, where R equals any digit 2 through 9 except the SMDR account code prefix, N equals any digit 2 through 9, and X equals any digit 0 through 9.

Route Advance

A telecommunications routine that routes outgoing calls over alternate facilities when the first choice trunk group is busy.

Routing Tables

Another term for ‘‘Call Vectoring’’ that is used by some other ACD vendors. Call Vectoring (or the similar concept, Routing Tables) provides an enhanced method of defining calling-party interfaces for incoming calls (usually incoming ACD calls). Throughout this manual, the term ‘‘Call Vectoring’’ is used in preference to ‘‘Routing Tables.’’

S-Channel Data Transmission

A channel used for communicating control signals between the System 85 and a data module.

Satellite

An orbiting telecommunications transceiver that provides long-distance transmission (usually using the microwave transmission medium).

Satellite Hop Count

The number of orbiting transceivers that have already been used in connecting a call to its destination. This information is sent with the call as a TCM (Traveling Class Mark).

Satellite Location

An unattended location in a Main/Satellite/Tributary complex that has the same listed directory number as the main switch and accesses the public and private network through the main.

Satellite Partition

An extension partition in a partitioned switch that also serves as a satellite location in a Main/Satellite configuration. This capability allows a partitioned System 85 to act as an endpoint in a tenant's private network.

Serial Data

Data bits that are transmitted or processed sequentially, one bit after the other.

Shared Extension

An extension with more than one image (bridged appearance) of an appearance. System 85 recognizes two functional types of shared extensions: shared extensions with *only one* appearance and shared extensions with *more than one* appearance. Straight line sets can participate in both types of shared extensions.

Short-Holding Time

A time limit set for internal calls when the Automatic Circuit Assurance feature is activated so that faulty lines can be detected.

Simplex

A data transmission system that allows data to travel in only one direction at a time.

Simulated Bridged Appearance

See **Temporary Bridged Appearance**.

Single-Appearance Voice Terminal

A voice terminal that can support only one appearance of its extension. The single-appearance voice terminals include: Models 2500, 7101A, and 7103A.

SLS

See **Straight Line Set**.

Soft Hold

One of the two forms of hold. In that soft held calls can be lost in certain situations, soft hold is less durable than hard hold. Soft hold is only available on single-appearance voice terminals.

Soft Processor Swap

An attribute of a duplicated System 85. During a ‘‘soft swap,’’ the switch gracefully shifts control from one processor to the other ‘‘healthier’’ processor. Since the current call-status information is transferred to the new processor, soft processor swaps are usually not noticed by users. (See also **Hard Processor Swap**.)

Software

A set of computer instructions that accomplish one or more tasks.

Special Access

A provision, whereby a customer (terminal or PBX) can be provided with connections directly into a long distance carrier service, bypassing the local CO (central office). In this context, bypassing the local CO does not necessarily mean that special access trunks do not pass through the CO. Bypassing does mean that special access trunks do not require local CO switching services.

Special Dial Tone

See **Recall Dial Tone**.

Split

A group of agents (group members) organized to receive calls in an efficient and cost-effective manner. This terminology is generally used in relation with the ACD (previously, EUCD) feature.

Instead of ‘‘split,’’ the terms ‘‘gate’’ and ‘‘bay’’ are used by other ACD vendors to refer to a functional grouping of agents.

Split Number

Sixty (thirty, before R2 V4) ACD splits can be assigned to the system. In Procedure 026, Word 1, the ‘‘split number’’ (a number between 1 and 60) is used to uniquely identify the individual splits. These same split numbers are used in Procedure 011, Word 1 to specify an ACD split that is used as the final point in a coverage path.

Split Supervisor

The first member of an ACD (or, EUCD) split. Usually an experienced agent who trains new agents, serves as a consultant to the split, and regulates the operation of the split.

Splitting

Separating a caller from an existing connection. Used for attendant call handling.

Stable Call

A call that has already been ‘‘set up’’ by call processing. Stable voice calls are in a steady talking condition. Stable data calls have finished the ‘‘hand-shaking’’ process.

Stage One Dialing

One Stage Dialing used with the ISN Interface feature when placing a call from the ISN to (or through) the System 85. This is done from an ISN terminal (Keyboard Dialing) by entering both the interface access code and the destination address on a single line.

Stage Two Dialing

Two Stage Dialing used with the ISN Interface feature when placing a call from the ISN to (or through) the System 85. Similar to one stage dialing (above) except that the interface access code and the destination code are each entered separately, on separate lines, in response to separate dial prompts (one from the ISN and the second from the System 85).

Standard Serial Interface (SSI)

A communications protocol that operates at 56 Kbps and interfaces the Applications Processor to 400 Series printers and the 500 BCT.

Station Message Detail Recording (SMDR)

A service that records detailed call information on incoming and outgoing calls, and associates these calls with account codes.

Statistical Multiplexing

A form of time-division multiplexing.

Status Information

Data that defines the current state of call processing within a switching system. In a duplicated switch, status information is transferred to the healthier processor during a soft processor swap. However, during a hard processor swap, status information is lost.

Status Lamp

An indicator lamp showing the status of an appearance by the state of the lamp (lighted, flashing, fluttering, or dark).

Stored Program Control

Software programs controlling system operation.

Straight Line Set (SLS)

A single-appearance voice terminal that *appears* to System 85 as a multiappearance voice terminal. Whenever single-appearance voice terminals are used as *signaling* terminals, the Terminal Busy Indication feature requires that these voice terminals are administered as straight line sets. Also, whenever single-appearance voice terminals are given bridging capabilities, the Bridged Call feature requires that these voice terminals are administered as straight line sets.

Subscriber

A voice terminal user who is authorized to access the AUDIX system to send and recover messages.

Subnetwork Trunking

Also referred to as Subnetwork Trunking. This is a technique used with intelligent switches that routes a call based on the destination rather than a fixed path. This process is usually dynamic in that call routing can be changed after the call has left its point of origin. Features that use this technique include AAR, ARS, and Extension Number Portability.

Subtending

A subtending system is a lower order switching system in the network hierarchy.

Switch

The System 85 switching system; usually used to refer to the System 85 as distinguished from the local adjuncts (e.g., APs and AUDIX adjuncts).

Switch Administrator

An executive responsible for specifying features and/or services available to users of the switch.

Switched Digital Communications Protocol Interface (SDCPI)

This interface physically connects between the PDM and the SDCPI interface ports on the AP. Its primary function is to provide the system with a 64 Kbps link for the downloading of AP software into the 515 BCT.

Switched Loop Operation

An automatic system in which an incoming call is switched to an idle loop on an available attendant console.

Switchhook

The button(s) on a voice terminal that are located under the handset.

Synchronous Data Transmission

Transmission in which the data characters and bits are transmitted at a fixed rate with the transmitter and receiver synchronized (same clock). This method of transmission eliminates the need for start-stop elements and provides greater efficiency. For comparison see *Asynchronous Data Transmission*.

System Administrator

An executive responsible for specifying features and/or services available to system users.

System Management Terminal (SMT)

An administration device which is similar to the MAAP. The SMT provides limited administration capability to the customer.

System Manager

The administrator of a partitioned switch. The system manager of a System 85 is responsible for sharing the services of the switch among the various tenants.

System Status Indicator

A lamp on an SSI panel that indicates the busy/idle condition of a Release Link Trunk. System Status Indicators can also monitor the queue warning status for ACD (previously, EUCD, UCD, or DDC) splits.

Tandem Node

In a network, a node (switch) in the network that receives signals from one switch and passes these signals on to another switch. An intervening switch between the origin and destination switch in a network.

Tandem Tie Trunk Network (TTTN)

A private network where several customer switching systems are interconnected by dial repeating tie trunks.

Tandeming

The act or process of passing a signal through a network node.

Tap Button

Another term for ‘‘recall button’’ that is used by some other switch vendors. After a recall button press (or tap button press) the switch returns recall dial tone to the voice terminal user. Throughout this manual, the term ‘‘recall button’’ is used in preference to ‘‘tap button.’’

TCM

See **Traveling Class Mark**.

Temporary Bridged Appearance

A function of the Call Coverage feature. This function allows a principal with a multiappearance terminal or a straight line set to bridge onto a coverage call by going off-hook on the appearance that was redirected to coverage. (A temporary bridged appearance is also known as a ‘‘simulated bridged appearance.’’)

Terminating/Originating Appearance

One of the two kinds of appearances assigned in Procedure 052, Word 1: terminating/originating and originating (only). When a terminating/originating appearance is idle, calls can either be received or placed using the appearance.

Text Editing, Management and Processing in an Enhanced Synchronized Terminal (TEMPEST)

TEMPEST is a subset of AP’s Function support Programs transported, via a downloading process, from the hard disk located in the AP into the BCT memory.

Tie Trunk

A telecommunications channel connecting two switching systems within the *private* network. This term is used in this manual for private network trunks only. Public network trunks are referred to by the public network function (i.e., CO trunks, FX trunks, toll trunks, etc).

Time-Division Multiplexing

A type of multiplexing that divides the transmission channel into successive time slots.

Time Multiplexed Switch (TMS)

A time-shared digital space switch that interconnects modules in a multimodule System 85.

Time Slot Interchanger (TSI)

The TSI performs the switching, digital attenuation, and conferencing functions for the switching network. A maximum of 256 simultaneous port-to-port connections can be supported by the TSI.

Timed Reminder Tone

A 1950-hertz tone provided by System 85 as part of the Timed Reminder feature. This tone is provided to remind an attendant that a call has been waiting or held on the console for longer than 30 seconds.

Traffic

The flow of voice and data communications through a switching system.

Transfer Rate of Information Bits (TRIB)

The number of intelligence (information not control and signaling) bits passing a given point in the data stream per second. If 64,000 bits per second are transmitted and 8,000 of those bits are control and signaling bits, the TRIB rate is 56,000 bps.

Transient Condition

A constituent part of call processing on System 85 that quickly passes into and out of existence (also referred to as a ‘‘transient state’’). The following are examples of transient conditions: a line is ringing; a line is in a dialing state (dialing, hearing dial tone, etc.); the line is receiving Call Waiting, Attendant Call Waiting, or Priority Calling tones; a line is receiving busy, intercept, reorder, or ringback tone.

Translation Information

Tabular data that defines durable (but changeable) criteria for the switch. These criteria include: feature options, trunk and line addresses, button assignments, extension numbers, dial access codes, and some feature activations within a switching system. In a duplicated switch, translation information is stored and updated in both switch processors.

Traveling Class Mark (TCM)

Information sent to a distant switch with the outpulsed digits. One type of TCM provides the FRL (facility restriction level) to a distant switch to determine if access to a particular route will be permitted. Another type sends the Satellite Hop Count to a distant switch.

Tributary Location

An attended location in a Main/Satellite/Tributary complex that has an unique listed directory number and accesses the public and private network directly or through the main switch.

Trunk

A communications channel between two switching systems.

Trunk Data Module (TDM)

A digital interface device that provides the interface for DCP (Digital Communications Protocol) connections to trunk facilities. It is used between off-premises private line trunk facilities and the System 85 switch, and for connections to DDD modems as the DCP member of a Modem Pooling conversion resource. The TDM provides conversion between the RS-232C protocol and the DCP protocol.

Trunk Group

Telecommunications channels assigned as a group for certain functions.

Trunk Group-Oriented Routing

A method of routing calls into the System 85 switch. Using trunk group-oriented routing, a call is recognized by the serving switch (usually, the serving CO) as a call that is routed to the local System 85 over a specific trunk group. In turn, the local System 85 accepts the call from over the trunk group, and recognizes that the call completes to a specific destination (e.g., the attendant queue, an ACD split, or a VDN).

Trunk Port

The hardware providing an access point to the switch network for each circuit associated with a trunk.

Trunk Vectoring

Another term for ‘‘Call Vectoring’’ that is used by some other ACD vendors. Call Vectoring (or the similar concept, Trunk Vectoring) provides an enhanced method of defining calling-party interfaces for incoming calls (usually incoming ACD calls). Throughout this manual, the term ‘‘Call Vectoring’’ is used in preference to ‘‘Trunk Vectoring.’’

UNIX Operating System

A versatile time-sharing software operating system for data processing equipment.

Unmeasured Agent

A member of an ACD split whose activity is not measured by CMS (Call Management System).

Unmeasured Split

A group of ACD agents whose activity is not measured by CMS (Call Management System).

Unstable Condition

See **Transient Condition**.

Vector

An attribute of the Call Vectoring feature. A vector is comprised of a discrete set of predefined call-processing steps that specifies a way of treating certain incoming calls.

Vector Directory Number (VDN)

A ‘‘soft’’ extension number that is assigned an internal line number (but not assigned to an equipment location). A vector is assigned to a VDN (or group of VDNs) to specify the call-processing sequence according to the dialed number. Each VDN can be included as part of a published number for public access to a vector’s call-processing sequence.

Virtual Circuit

The entire path between two end processors, which may consist of more than one communications link. In the DCIU application, the term ‘‘data path’’ is used instead of virtual circuit.

Voice Coupler

An electrical isolation device used for passing audio signals into a system.

Voice Terminal

A single-appearance or multiappearance telephone.

Warning Tone

A tone applied by System 85 to provide a caution to users of the switch. System 85 can return warning tone when a call would unexpectedly route over higher-cost toll facilities. The features where the switch is able to provide this type of warning tone include: AAR (Automatic Alternate Routing) and ARS (Automatic Route Selection). Another type of warning tone, also called ‘‘intrusion tone,’’ is applied to caution talking parties to the presence of an unexpected party within the connection. The features where the switch is able to provide this type of warning tone include: ACD (Automatic Call Distribution), Busy Verification of Lines, EUCD (Enhanced Uniform Call Distribution), Override, Trunk Verification—Attendant, and Trunk Verification—Voice Terminal.

WATS (Wide Area Telecommunications Service)

A service that allows users to place toll calls for a flat monthly charge. Specific charges are based on the size of the calling area (WATS band) and on the amount of expected usage.

WATS Trunk

A telecommunications channel used to place a WATS call.

Wink Start Signaling

A trunk-signaling protocol that uses a ‘‘wink’’ (on-hook to off-hook and return to on-hook) that lasts from 0.14 to 0.29 seconds to indicate that the receiving (far end) switch is ready to receive digits. See Appendix F, Enhanced Trunking, for more information on trunk-signaling protocols.

Work-Related Call

Calling activity by an ACD agent that serves to remove the agent from the agent queue. When outgoing calling is deemed to be work related, removal of the agent from the queue can be provided for outgoing calling.

INDEX

1

10- to 7-Digit Conversion
ARS *21-6*
102F1-A Display Unit
FADS *53-4*
102G1-A Display Unit
FADS *53-4*
106B, Display Unit
ACD *17-60*
EUCD *50-41*
107A ORPI
Tenant Services *109-41*
10-bit start/stop signaling
Data Call Setup *38-10*
Host Computer Access *56-2*
ISN *60-1*
13A Announcement Set
ACD *17-59*
DDC *45-7*
EUCD *50-41*
Intercept Treatment *62-6*
UCD *125-8*
15-Word Format
SMDR *107-11*

2

2012D, Power Transformer
ACD *17-59*
Code Calling Access *35-4*
Intercept Treatment *62-6*
Loudspeaker Paging Access *73-12*
Music-on-Hold Access *81-4*
Queuing *91-12*
Radio Paging Access *92-6*
Recorded Telephone Dictation Access *94-4*
207B Power Supply
SMDR *107-23*
211A Power Unit
FADS *53-4*
212A Data Set
212A Data Set—*Contd*
DCA *39-11*
2500 Series Voice Terminals
Message Waiting — Automatic *77-6*
2541BM, Voice Terminal
CAS *33-10*
278A Adapter
Malicious Call Trace *75-16*
2A Translator
Visually Impaired Attendant Service *127-4*
2-Minute Recall
Call Park *29-3*
Loudspeaker Paging Access *73-9*
2-Stage Dialing
ISN Interface *60-5*
2-Way Observing
ACD *17-11*

3

30A8, System Status Indicator
ACD *17-60*
Call Vectoring *31-25*
CAS *33-10*
DDC *45-7*
EUCD *50-41*
UCD *125-8*
3122 Headset
Starset II
ACD *17-60*
EUCD *50-42*
Starset Supra
ACD *17-60*
EUCD *50-42*
31712 Headset Adapter
ACD *17-60*
EUCD *50-42*
31815 PC Cartridge
PC/PBX Connection *85-5*
3270 Series Protocol Converters
Dedicated Switch Connections *41-6*
36A Voice Coupler

36A Voice Coupler—*Contd*
ACD *17-59*
Intercept Treatment *62-6*
Music-on-Hold Access *81-4*
Queuing *91-12*
Radio Paging Access *92-6*
Recorded Telephone Dictation Access *94-4*
3B1 PC
PC/PBX Connection *85-5*
3B2 CDRU (Call Detail Recording Utility)
VFCDR *126-25*

4

400-Series TELETYPE Printers
LWC *70-16*
40-Character Display *48-1*
4310 AAC Teleprinter, TELETYPE
SMDR *107-23*
4-Digit Dialing
DCS *49-21*

5

510D
Call Coverage *25-26*
Data Call Setup *38-4*
Display—Voice Terminal *48-5, 48-17*
LWC *70-16*
513 BCT
Call Coverage *25-25*
Display—Voice Terminal *48-17*
515 BCT
Call Coverage *25-26*
Data Call Setup *38-4*
Display—Voice Terminal *48-17*
LWC *70-16*
Message Waiting — Automatic *77-6*
56 Kbps Clear Channel Service
ACCUNET Switched 56 Service *3-1*
DS1 *44-6*
574-5 Transfer Panel
Power Failure Transfer *86-6*
5-Digit Dialing
DCS *49-22*
Extension Number Portability *51-4*

6

6017-type key, Attendant Console
Unattended Console Service—Alternate Console Position *121-5*
609A Transfer Panel
Power Failure Transfer *86-6*
Unattended Console Service—Alternate Console Position *121-5*
60A Headset
CAS *33-10*
6300 Plus PC
PC/PBX Connection *85-5*
6C Grooved Faceplate Guide
Visually Impaired Attendant Service *127-4*

7

7100A Series Voice Terminals
Message Waiting — Automatic *77-6*
7200H Series Voice Terminals
Message Waiting — Automatic *77-6*
7205H Hybrid Voice Terminal
Call Coverage *25-25*
Data Call Setup *38-4*
73 Series Port Carrier
See DS1 Port Carrier *3-4*
7300 PC
PC/PBX Connection *85-5*
7300S Series Voice Terminals
Message Waiting — Automatic *77-6*
7400D Series Voice Terminals
Message Waiting — Automatic *77-6*
7404D VDS (Voice Data Station)
Call Coverage *25-25*
Data Call Setup *38-3*
Display—Voice Terminal *48-5, 48-17*
PC/PBX Connection *85-5*
7405D Digital Voice Terminal
ACD *17-60*
Call Coverage *25-25*
Data Call Setup *38-3*
Display—Voice Terminal *48-18*
EUCD *50-42*
LWC *70-16*
7406D Digital Voice Terminal
ACD *17-60*
Display—Voice Terminal *48-17, 48-18*
EUCD *50-21*
7407D IDT (Integrated Display Terminal)

7407D IDT (Integrated Display Terminal)—*Contd*
ACD *17-60*
Call Coverage *25-26*
Display—Voice Terminal *48-18*
EUCD *50-42*
LWC *70-16*

8

800 Service
WATS Access *128-1*
89A Voice Coupler Circuit
Code Calling Access *35-4*
Loudspeaker Paging Access *73-12*
Queuing *91-12*
8-Character Display Attendant Console
Attendant Display *10-1*
Malicious Call Trace *75-16*
Precedence Calling *87-10*

9

9042-2 ADDMASTER Printer
FADS *53-4*
93B CPS (Customer Premise System)
CMDR *34-9, 34-13, 34-23*
94A LSU (Local Storage Unit)
CMDR *34-9, 34-23*
Memory Options *34-15*
SMDR *107-8*
990A Light Sensor
Visually Impaired Attendant Service *127-4*
9-Track Tape Unit
CMDR *34-7*
Memory Capacity *107-9*
SMDR *107-7, 107-23*

A

AAR (Automatic Alternate Routing)
16-1Authorization Code, 16-1FRL, 16-1Routing Patterns, 16-2Pattern Queuing, 16-3Location Code (RNX), 16-3Overflow to the Public Network, 16-3Subnetwork Trunking, 16-3Uniform Numbering, 16-4Conditional Routing, 16-4Generalized Route Selection, 16-4IDDD (International Direct Distance Dialing, 16-4IXC, 16-4Private Network Locations in Foreign Countries, 16-4Warning Tone, 16-6Flow Diagram, 16-9DS1, 16-9Data Calling Requirements, 16-9Inferred Routing, 16-9Tie Trunk Types
AAR (Automatic Alternate Routing)—*Contd*
FRL *52-1*
Abandon Call Search
ACD *17-8*
Call Vectoring *31-25*
EUCD *50-5*
Abbreviated and Delayed Ringing *101-1*
Abbreviated Ringing Without Delayed Ringing *101-2*
Abbreviated Dialing
AD (Automatic Dialing) Buttons *2-4*
Available Characters *2-1*
Capacities *2-9*
Group Lists *2-5*
List Types
Group Lists *2-5*
Lists A and B *2-6*
Personal Lists *2-5*
System List *2-5*
List-stored Number Addresses *2-6*
Manual Digit Entry *2-3, 2-10*
Methods of Storage
Button-Stored *2-4*
List-Stored *2-4*
Number Size and Type *2-1*
Personal Lists *2-5*
Programmable Voice Terminal *2-4*
Shared Extensions *2-10*
Special Function Code Entry *2-3*
Special Functions *2-2*
Mark *2-2*
Pause *2-2*
Stop *2-3*
Suppress *2-3*
Wait *2-2*
Wait for Dial Tone *2-3*
System List *2-5*
Usable Characters *2-1*
Abbreviated Ringing
Abbreviated and Delayed Ringing *101-2*
Abbreviations *J-1*
ACA (Automatic Circuit Assurance)
4-Digit Dial Access Codes in a DCS *19-4*
Activation *19-2*
Audit Trail *19-5*

ACA (Automatic Circuit Assurance)—*Contd*
Audit Trail Polling *19-2*
Audit Trail Report *19-6*
Centralized Referral *19-2*
Data Calls *19-3*
Deactivation *19-2*
Designated Console *19-3*
Detectable Fault Conditions *19-1*
Long Holding Time *19-1*
Referral Call *19-1, 19-3*
Short Holding Time *19-1*
Threshold Limits *19-1*
Trunk Failure Data *19-2*
Access Features
ACCUNET Service Interface *3-1*
APLT *4-1*
ARS *21-1*
AUTOVON Access
Precedence Calling *87-1*
Code Calling Access *35-1*
DCA *39-1*
Dial Access to Attendant *42-1*
DMI *43-1*
FX Access *54-1*
Host Computer Access *56-1*
IXC Access *66-1*
Loudspeaker Paging Access *73-1*
Music-on-Hold Access *81-1*
Radio Paging Access *92-1*
Recorded Telephone Dictation Access *94-1*
Remote Access *95-1*
WATS Access *128-1*
Account Code Formats
CMDR (Centralized Message Detail Recording) *34-3*
SMDR *107-3*
VFCDR *126-14*
Account Codes
Forced Entry of Account Codes (FEAC) *126-4, 126-12*
ACCUNET Service Interface
ACCUNET Switched 56 Service *3-1*
Data Call Setup *3-1, 3-3*
DS1 Interface *3-1, 3-4, 44-6*
RS-366 Protocol *3-4*
ACCUNET Switched 56 Service
ACCUNET Service Interface *3-1*
ACD (Automatic Call Distribution)
2-Way Observing *17-11*
Abandon Call Search *17-8*
ACD (Automatic Call Distribution)—*Contd*
Agent *17-1*
Agent Override *17-10*
Agent States (Modes) *17-20*
AUTO-IN *17-18*
AUX-WORK *17-3, 17-19*
MANUAL IN *17-20*
STAFFED *17-20*
Announcement
City-of-Origin *17-12*
Queue-of-Origin *17-12*
Answer Supervision *17-8*
Arrangement *17-6*
AUDIX *17-40*
Automatic Answer *17-18*
Automatic Available *17-46*
Buttons for Agent Terminals *17-18*
Buttons for Split Supervisor Terminal *17-21*
Call Coverage *25-1*
CMS (Call Management System) *17-5*
Display
City-of-Origin *17-14*
Queue-of-Origin *17-14*
DNIS *17-15, 17-46*
Event (Stroke) Counting *17-21*
Gateway Service to AUDIX *17-1*
Ghost Calls *17-8*
Hunting
Circular *17-3*
Linear *17-2*
MIA (Most Idle Agent) *17-3*
Incoming Calls *17-3*
Interflow *17-9*
Intraflow *17-9*
Intraflow—All Chaining *17-9*
Intraflow—Threshold Chaining *17-9*
Lamp Monitoring *17-6*
Legal Considerations *17-42*
Message Center *17-40*
Modes
See Agent States *17-3*
Moving Agents *17-10*
Multiple Call Handling *17-17*
Music-on-Hold *17-12*
Muting *17-11*
Outgoing Calls *17-3*
Overload Balancing *17-9*
Parameters
Configuration *17-40*
Inflow Level *17-10*

ACD (Automatic Call Distribution)—*Contd*
Parameters—*Contd*
Overflow Level *17-10*
Pegging Agent Calling Activity *17-42*
Priority Queuing *17-3*
Queue-Status Display *17-16*
Recorded Announcement Limit *17-41*
Recorded Announcements *17-11*
Routing Methods *17-4*
Service Observing *17-11*
Single-Appearance Terminals *17-46*
Split *17-1*
Split Supervisor *17-8, 17-10*
State Diagram *17-7*
System Supervisor *17-9*
Warning Tone *17-10, 17-11*
Zip Tone *17-12*
Acronyms *J-1*
ACTGA (Attendant Control of Trunk Group Access) *7-1*
ACU (Automatic Calling Unit)
ACCUNET Service Interface *3-4*
Host Computer Access *56-2*
AD (Automatic Dialing) Buttons
Abbreviated Dialing *2-4*
ADFTC (Analog/Digital Facility Test Circuit)
Modem Pooling *78-7*
Adjunct Processor
AUDIX *14-18*
In DCS Environment *49-26*
Administrable Recall Button
Attendant Recall *12-2*
Call Park *29-3*
Conference—Attendant Six Party *36-2*
Loudspeaker Paging Access *73-9*
Serial Calls *106-2*
Administration Facilities
CSM (Centralized System Management) *C-1*
FM (Facilities Management) *C-2*
MAAP (Maintenance and Administration Panel) *C-1*
RMATS (Remote Maintenance, Administration, and Traffic System)-II *C-2*
SMT (System Management Terminal) *C-1*
TCM (Terminal Change Management) *C-2*
Translations *C-1*
VMAAP (Visual Maintenance and Administration Panel) *C-1*
ADU (Asynchronous Data Unit)
ADU (Asynchronous Data Unit)—*Contd*
ISN *60-9*
Advanced Private Line Termination
See APLT *4-1*
Agent
ACD *17-1*
EUCD *50-1*
Agent Hold
See ACD Multiple Call Handling *17-17*
Agent Override
ACD *17-10*
EUCD *50-9*
Agent State Diagram *17-7*
AIM (Asynchronous Interface Module)
ISN *60-9*
AIOD (Automatic Identification of Outward Dialing)
Billing
Attendant *20-2*
Auxiliary Trunk *20-2*
Auxiliary Voice Terminal *20-1*
Failure *20-2*
Individual Voice Terminal *20-1*
Five Digit Dialing *20-2*
Remote Access *20-1*
Alerting
See Ringing
Alphanumeric Dialing
See Mnemonic Dialing *38-14*
Alternate Console Position
See Unattended Console Service *121-1*
Alternate Routing of DCIU Messages
DCIU *G-8*
DCS *49-6*
Alternate Voice/Data
See AVD *44-5*
Analog Voice Terminals
See 2500 Series and 7200 Series
Analog/Digital Facility Test Circuit
See ADFTC *78-7*
ANI (Automatic Number Identification)
See AIOD *20-1*
ANN-11 Circuit Pack
ACCUNET Service Interface *3-4*
DMI *43-7*
DS1 *44-16*
ANN-35 ISDN Primary Rate Port Circuit Pack
ISDN/PRI *61-23*
ANN-35 ISDN Primary Rate Port Circuit Pack
DMI *43-7*

Announcement Barge-In
Intercept Treatment *62-3*
Answer Supervision
ACD *17-8*
Call Vectoring *31-9, 31-10*
EUCD *50-5*
Multiple Call Handling *17-17*
AP 16
ACD *17-59*
LWC *70-16*
AP (Applications Processor) Features
LWC *70-1*
APLT (Advanced Private Line Termination)
AAR/ARS *4-4*
Attendant Display *4-1*
Authorization Code *4-1*
CCSA (Common Control Switching Arrangement) *4-1*
EPSCS (Enhanced Private Switched Communications Service) *4-1*
LDN *4-1*
Tandeming *4-1*
Appearance *E-2*
Applications Processor
Display—Voice Terminal *48-18*
ARS (Automatic Route Selection)
10- to 7-Digit Conversion *21-6*
6-Digit Routing *21-4*
Access Codes *21-5*
ARS Toll Restriction *21-5*
Authorization Code *21-2*
Clocked Manual Override *21-5*
Destination Code *21-2*
First-Choice Trunk Group *21-1*
Flow Diagram *21-8*
FRL *21-1, 52-1*
FRL Access to Routing Patterns *21-12*
HNPA (Home Numbering Plan Area) *21-2*
Manual Override *21-6*
Nontoll Access Code *21-5*
NPA (Numbering Plan Area) *21-2*
Partitioned ARS Routing *109-7*
Pattern Queuing *21-2*
Private Network Routing *21-6*
Queuing *21-2*
Real-Time Clock *21-16*
Routing Patterns *21-1*
Service Codes *21-4*
Subnetwork Trunking *21-6*
Tenant Services *109-7*
ARS (Automatic Route Selection)—*Contd*
Time-of-Day Routing *21-5*
Toll Access Code *21-5*
Unauthorized Call Control *21-6*
Warning Tone *21-5*
ASCII Character Code
CMDR *34-16*
Data Call Setup *38-10*
Display—Voice Terminal *48-13*
Host Computer Access *56-2*
SMDR *107-14*
Asynchronous Interface Module
See AIM *60-9*
ATMS (Automatic Transmission Measurement System) *22-1*
AT&T PC 6300
Display—Voice Terminal *48-18*
AT&T PC 6300 Plus
Display—Voice Terminal *48-18*
AT&T Personal Terminal 510D
See 510D *48-5*
AT&T UNIX System PC 3B1
Display—Voice Terminal *48-18*
AT&T UNIX System PC 7300
Display—Voice Terminal *48-18*
Attendant Assistance
Precedence Calling *87-4*
Straightforward Outward Completion *108-1*
Attendant Auto-Manual Splitting *5-1*
Attendant Call Waiting *6-1*
Attendant Console
Attendant Direct Trunk Group Selection *9-2*
Attendant Control of Trunk Group Access *7-1*
Attendant Control of Voice Terminals *96-1Restrictions, 96-2Restrictions, 96-3Restriction Groups, 96-5Call Forwarding*
Call Forwarding *26-9*
Attendant Dial Access *42-1*
Attendant Direct
IPA (Interpartition Access) *67-1*
Attendant Direct Trunk Group Selection *9-1*
Attendant Display
8-Character Display Attendant Console *10-1*
APLT *4-1*
Calling Number *10-1*
Class of Service *10-2*
ICI (Incoming Call Identification) *10-2*
Intercept Treatment *62-1*
Trunk Identification *10-2*

Attendant Diversion
Precedence Calling *87-2*
Attendant Diversion to Recorded Announcement
Intercept Treatment *62-1*
Attendant DXS With BLF
BLF (Busy Lamp Field) *8-1*
CAS *8-3*
Extended DXS *8-1, 8-2*
Off-Premises Terminals *8-4*
Attendant Held Calls
See Attendant Release Loop Operations *13-1*
Attendant Intercept
See Intercept Treatment *62-1*
Attendant Interposition Calling and Transfer
Queuing *11-1*
Attendant Lockout
See Privacy *89-1*
Attendant Originated Call Through FEAC
SMDR (Station Message Detail Recording) *107-14*
Attendant Overflow
Tenant Services *109-6*
Attendant Queue
Tenant Services *109-3*
Attendant Recall
Administrable Recall Button *12-2*
Multiappearance Voice Terminal *12-2*
Single-Appearance Voice Terminal *12-1*
Attendant Release Loop Operation
Call Identification *13-1*
Holding Calls Off Console *13-1*
Timed Reminder *13-1*
Timed Reminder Interval *13-1*
Attendant Service, Visually Impaired *127-1*
Attendant Six Party Conference
See Conference—Attendant Six Party *36-1*
Attendant, Trunk Group Busy/Warning Indicators *117-1*
Audible Message Waiting
See Message Waiting — Automatic *77-1*
Audit Trail Report
ACA *19-6*
AUDIX Adjunct
LWC *70-16*
AUDIX (Audio Information Exchange)
ACD *14-2*
ACD Gateway Service *17-1*
AUDIX Subscriber *14-19*
AUDIX (Audio Information Exchange)—*Contd*
AUDIX System Administrator *14-19*
Busy Without Call Coverage *14-11*
Call Answering *14-2*
Call Conference into AUDIX *14-4*
Call Coverage *25-1*
Call Transfer into AUDIX *14-3*
Call Transfer Out of AUDIX *14-4, 14-9*
Call Transfer Telephone Requirement *14-11*
Call Transfer To AUDIX *14-7*
Calls Outside the DCS Network *14-11*
Conference—Three-Party With AUDIX *14-7*
DCIU Link *14-14*
DCS *14-17*
DCS Switch Compatibility *14-11*
Dial Access Codes *14-11*
EDC *14-2*
EUCD *14-2*
Features
Call Answering *14-2*
LWC *14-2, 70-1*
Unified Messaging *14-2*
Voice Mailbox *14-2*
Intercept Tone *14-13*
Limits *14-11*
LWC *14-2, 70-8*
No Feature Button *14-13*
No Trunk Availability *14-13*
Nondirection of Transferred Call *14-13*
Redirection to AUDIX *14-13*
Reorder Tone *14-14*
Required Features *14-19*
Touch-Tone Requirement *14-18*
Unsuccessful Transfers *14-12*
Voice Mailbox *14-2*
Authorization Codes
APLT *4-1*
ARS *21-2*
Check Digit *15-2*
Check-Sum Digit *15-2*
FRL *15-1, 52-1, 95-4*
Limits *15-3*
Random Selection *15-2*
Remote Access *95-2, 95-4*
Reviewing Assigned Codes *15-4*
Seed Digit *15-2*
Automatic Alternate Routing *16-1See AAR*
Automatic Answering
ACD *17-18*

Automatic Answering—*Contd*
EUCD *50-15*
Automatic Available
ACD *17-46*
Automatic Call Distribution
See ACD *17-1*
Automatic Callback *18-1*
Automatic Circuit Assurance
See ACA *19-1*
Automatic Dialing
Host Computer Access *56-2*
Automatic Identification of Outward Dialing
See AIOD *20-1*
Automatic, Intercom *63-1*
Automatic Message Waiting
Automatic Message Waiting Lamp
LWC *70-3*
See Message Waiting — Automatic *77-1*
Automatic Number Identification (ANI)
See AIOD *20-1*
Automatic Route Selection
See ARS *21-1*
AUTOVON (Automatic Voice Network)
See Precedence Calling
Auxiliary Cabinet
EUCD *50-41*
AVD (Alternate Voice/Data)
Data Call Setup *38-25*
DMI *43-1*
DS1 *44-5*

B

B Channels
DMI *43-1*
ISDN/PRI *61-4*
B8ZS Format
See Digital Signaling Formats
Backup Voice Terminal
CAS *33-2*
Barrier Code
Remote Access *95-2*
Basic Rate Interface
See ISDN, BRI *61-2*
Bay
See Split *17-1*
Bearer Channels
See ISDN and DMI
BLF (Busy Lamp Field)
BLF (Busy Lamp Field)—*Contd*
See Attendant DXS With BLF
Branch Location
CAS *33-1*
BRI (Basic Rate Interface)
ISDN *61-2*
Bridged Call
Multiappearance Voice Terminal *23-1*
Shared Appearances *23-1*
SLS (Straight Line Set) *23-2*
BTC Protocol
VFCDR *126-22*
Bundling Format; Voice Channel Expansion
DS1 *44-9*
Busy Indications, Terminal *110-1*
Busy Verification of Lines
Attendant *24-1*
Warning Tone *24-1, 24-3*
Buzz
Intercom
Automatic *63-2*
Dial *64-2*
Manual Signaling *76-1*
BX.25 Protocol
DCIU *G-6*

C

C201A Call Coverage Module
Call Coverage *25-25*
C401A Call Coverage Module
Call Coverage *25-25*
Cabinet Separation
SMDR *107-14*
Call Answer From Any Voice Terminal
See Unattended Console Service *122-1*
Call Answering
AUDIX *14-2*
Call, Bridged *23-1*
Call Coverage
ACD *25-1, 25-15*
AUDIX *25-1*
Caller Response Interval *25-4*
Consult/Return *25-4*
Cover Active *25-3*
Cover All *25-3*
Cover Busy *25-3*
Cover Don’t Answer *25-3*
Coverage Callback *25-4*

Call Coverage—*Contd*
Coverage Groups *25-1, 25-14*
Coverage Path *25-1*
Coverage Paths Without Criteria *25-15*
Coverage Points *25-1*
Coverage Tone *25-4*
Criteria *25-3*
DCS *25-14*
Display—Voice Terminal *25-8, 25-12, 48-11*
Dual Coverage Paths *25-3, 25-14*
EUCD *25-1*
Implied Principal Addressing *25-7*
LWC *25-15, 70-3*
Message Center *25-1, 25-15*
Priority Calls *25-2*
Ring-Ping *25-7*
Send All Calls *25-5, 25-14, 25-15*
Send All Calls Extension
Dial Access Code *25-6*
Feature Button *25-5*
In a SAC Group *25-6*
SAC XXXX Button *25-5*
Shared Appearances *25-5, 25-6*
Send All Calls Group of Extensions
Dial Access Denied *25-6*
Feature Button *25-6*
Individual Extensions *25-6*
SAC GROUP Button *25-6*
Shared Appearances *25-6*
Shared Appearances *25-5*
Single Path Functionality for Dual Path Groups *25-15*
Soft Numbers *25-13*
Straight Line Sets *25-14*
Temporary Bridged Appearance *25-7*
Types of Coverage *25-3*
Call Failure Records
CMDR *34-16*
SMDR *107-16*
Call Forwarding
Busy and Don’t Answer
Limitations *26-4*
Don’t Answer
Limitations *27-3*
Follow Me
Hunting *28-8*
Limitations *28-4*
Modem Pooling *28-9*
Override *28-3*
Call Forwarding—*Contd*
Follow Me—*Contd*
Ring Ping *28-1*
Call Forwarding—All Calls
See Call Forwarding—Follow Me *28-1*
Call Hold
See Hold
Call Management System *17-5*
Call Park
2-Minute Recall *29-3*
Administrable Recall Button *29-3*
Answer Back Channels *29-2*
Conference—Three Party Requirement *29-2*
Paging Requirement *29-2*
Call Pickup
Groups *30-3*
Limits *30-3*
Call Vectoring
Abandon Call Search *31-25*
ACD Environment *31-4*
Answer Supervision *31-9, 31-10*
Check-Backup-Split Command Counter *31-22*
Command Definitions *31-7*
Coverage to Attendant Queue *31-4*
DNIS (Dialed Number Identification Service) *31-6*
Emergency Calls *31-5*
Forced-Busy Command Timer *31-22*
Forced-Disconnect Command Timer *31-22*
Go-To-Step Command Counter *31-22*
Information Announcement *31-2*
Integrity Checks *31-23*
Intraflow
Conditional *31-15*
Unconditional *31-16*
Multiple Call Handling *31-25*
Night Service *31-4*
Permanent Seizure *31-13*
Permanent Seizure Counters *31-22*
Permanent Seizure Timers *31-22*
Priority Queuing *31-5*
Queue-Status Display *31-25*
Recent-Disconnect Announcements *31-3*
Recorded Announcement Limit *31-20*
Repeated Delay Announcement *31-15*
Route-To Retry Counter *31-22*
Routing Methods *31-6*
Sample Vectors *31-13*
Soft Numbers *31-1*

Call Vectoring—*Contd*
VDN (Vector Directory Numbers) *31-1*
Vector Commands *31-7*
Call Waiting
Attendant *6-1*
Distinctive Tones *32-1*
Call Waiting Lamp
Tenant Services *109-3*
Voice Terminals *32-1*
Call Waiting—Originating
See Priority Calling
Callback, Automatic *18-1*
Caller Response Interval
Call Coverage *25-4*
Calling Number Display to Agent
ACD *17-14*
EUCD *50-12*
Calling Number Display to Attendant *10-1*
Calling, Priority *88-1*
Calls, Serial *106-1*
CAS (Centralized Attendant Service)
Backup Voice Terminal *33-2*
Branch Location *33-1*
Branch Location Attendants *33-1*
Branch Location Modes *33-2*
CAAVT (Call Answer From Any Voice Terminal) Mode *33-2*
Call Identification Tones *33-1*
DID Routing *33-6*
FADS (Force Administration Data System) *33-4*
Main Location *33-1*
Release Link Trunks *33-1*
RLTs (Release Link Trunks) *33-5*
SSI (System Status Indicator) *33-2*
Uniform Numbering *33-5*
CCITT (International Telegraph and Telephone Consultive Committee)
ISDN/PRI *61-1*
CCS (Hundred Call Seconds)
FADS *53-2*
CCSA (Common Control Switching Arrangement)
See APLT *4-1*
CDM (Channel Division Multiplexer)
DS1 *44-9, 44-16*
CDR (Call Detail Record)
CMDR
CMDR (Centralized Message Detail Recording) *34-1*
CDR (Call Detail Record)—*Contd*
CMDR (Centralized Message Detail Recording)—*Contd*
Formats *34-3*
Word Structure *34-3*
CDR (Call Detail Recording)
SMDR *107-1, 107-3*
VFCDR *126-1*
CDR (Call Detail Recording) Word Structure
VFCDR *126-14*
CDR Ports
CMDR/NCOSS *34-1*
PCC (Processor Communications Circuit) Port *126-1*
SMDR *107-1, 107-7*
SMDR (Station Message Detail Recording) *34-7*
CDR record (Call Detail Recording record)
SMDR *107-3*
CDRU (Call Detail Recording Utility)
VFCDR *126-25*
CEM (Channel Expansion Multiplexer)
DS1 *44-8*
Central Office Line, Personal *84-1*
Centralized Attendant Service
See CAS *33-1*
Centralized Messaging
DCS *49-13, 49-26*
Centralized Station Message Detail Recording (CSMDR)
See CMDR (Centralized Message Detail Recording) *34-1*
Channel Compression
DS1 *44-8*
Check Digit and Check-Sum Digit
Authorization Codes *15-2*
Check-Backup-Split Command Counter
Call Vectoring *31-22*
Chime Paging
See Code Calling Access *35-1*
Circuit Packs
ANN-35 ISDN Primary Rate Port
ISDN/PRI *61-23*
SN231 Auxiliary Trunk Circuit Pack
Malicious Call Trace *75-16*
TN380D Module Processor
ISDN/PRI *61-23*
TN463 System Clock Synchronizer Circuit
ISDN/PRI *61-23*
Circular Hunting

Circular Hunting—*Contd*
ACD *17-3*
EUCD *50-2*
Hunting *59-1*
UCD *125-2*
City-of-Origin Announcement
ACD *17-12*
EUCD *50-11*
City-of-Origin Display
ACD *17-14*
EUCD *50-11*
Class of Service
Tenant Services *109-13*
Class-of-Service Display to Attendant *10-2*
Class-of-Service Restrictions
See Restrictions—Voice Terminal Restrictions *100-1*
Cluster
DCS *49-2*
CMDR (Centralized Message Detail Recording) *34-1*
18-Word Format *34-12*
93B CPS Polling Device *34-9*
94A LSU *34-9*
Account Code Formats *34-3*
Activating *34-13*
ASCII Character Code *34-16*
Cabinet Separation *34-16*
Calculating Polling Time *34-15*
Call Failure Records *34-16*
CAS Attendant Extended Calls *34-19*
CDR (Call Detail record) *34-3*
Condition Codes *34-4, 34-11*
Data Base *34-3*
Deactivating *34-13*
Estimating Record Density *34-15*
LC316 Memory Board *34-15*
LC459B Memory Board *34-15*
LSU (Local Storage Unit) *34-9*
LSU Memory Options *34-15*
LSU Requirement *34-14*
Memory Requirements *34-15*
Polling and Reporting *34-13*
Polling Arrangements *34-13*
Polling Device, 93B CPS *34-9*
Polling Options *34-14*
Record Format *34-3*
Related Documentation *34-23*
Unsuccessful Call Record Option *34-16*
Variable Call Completion Threshold *34-17*
CMDR (Centralized Message Detail Recording)—*Contd*
VFCDR *126-28*
Word Structure *34-3*
Code Calling Access
Answer-Back *35-1, 35-3*
Called Party Code *35-1, 35-3*
Chiming Signal *35-1*
Limits *35-3*
Code Restriction
Area and Office Codes *97-1*
Code Limits *97-2*
Restriction Levels *97-1*
Codes
Authorization *4-1, 15-1, 52-1, 95-2*
Barrier *95-2*
Condition
CMDR *34-11*
Restriction *97-1*
Collision
See Glare in Enhanced Trunking *F-10*
Command Definitions
Call Vectoring *31-7*
COMM-Stor II Formatting Unit
SMDR *107-15, 107-23*
Completion, Straightforward Outward *108-1*
Concentrator
ISN *60-2*
Condition Codes
CMDR *34-11*
VFCDR *126-6*
Conditional Routing *16-4AAR*
Conference—Attendant Six Party
Administrable Recall Button *36-2*
Establishing *36-1*
Recalling the Attendant *36-2*
System Limits *36-2*
Trunk Connections *36-2*
Trunks Only Conferences *36-2*
Conference—Three Party
Meet-Me Conference *37-2*
Trunk-to-trunk Transfer Option *37-2*
With CONFERENCE Button *37-1*
With RECALL Button *37-1*
Without Buttons *37-1*
Connections, Trunk-to-Trunk *120-1*
Connectivity to System 85
ISN *60-1*
Consult/Return
Call Coverage *25-4*

Controlled Restrictions *96-1See Restrictions—Attendant Control of Voice Terminals*
Controlling Attendant Console
  Tenant Services *109-5*
Conversion Resource
  Data Call Setup *38-10*
  Modem Pooling *78-6*
Cost Advantages
  Tenant Services *109-1*
Counters and Timers
  Call Vectoring *31-22*
Cover or Coverage
  See Call Coverage *25-3*
Coverage Tone
  Call Coverage *25-4*
CPE (Customer Provided Equipment)
  Malicious Call Trace *75-16*
CPS (Customer Premise System), 93B
  CMDR *34-9, 34-13*
Criteria for Call Coverage *25-3*
CSM (Centralized System Management)
  Administration Facilities *C-1*
CSMDR (Centralized Station Message Detail Recording)
  See CMDR (Centralized Message Detail Recording) *34-1*
Cutoff, Ringing *102-1*

D

D Channel
  DMI *43-1*
  ISDN/PRI *61-4*
D4 Channel Bank
  DS1 *44-5, 44-12, 44-16*
D401A, Digital Display Module
  ACD *17-60*
  Call Coverage *25-25*
  Display—Voice Terminal *48-12, 48-18*
  LWC *70-16*
Data Base *107-3*
Data Call Setup
  10-bit start/stop signaling *38-10*
  3270 Configurations *38-4*
  ACCUNET Service Interface *3-1, 3-3*
  ACU (Automatic Calling Unit) *38-19*
  Analog
  Analog Data Call Setup *38-6*
    DCA *39-3*
Data Call Setup—*Contd*
  ASCII Character Code *38-10*
  AVD (Alternate Voice/Data) *38-25*
  Basic Keyboard Dialing *38-14*
  Call Progress Monitoring and Control *38-11, 38-12*
  Call Setup Methods *38-1*
  DATA button *38-9*
  Data Communications
    Host Computer Dialing *D-5*
  Data Hot Line Service *38-14*
  Data Modules *38-8, 38-31*
  Data Rates Supported *38-1*
  DCP (Data Communications Protocol) *38-8, 38-31*
  Default Terminal Dialing *38-14, 38-22*
  Digital Data Call Setup *38-8*
  DS1 Interface *38-25*
  Dual Interfaced Host Computer *38-16*
  Host Computer Connectivity
    Analog Interface Features *38-15*
    Digital Interface Features *38-16*
    Mixed Interfaces *38-16*
  Host Computer Dialing *38-19, D-5*
  Keyboard Dialing
    Call Progress Monitoring and Control *38-11*
    In Process Corrections *38-11*
    Modem Pool Identification *38-11*
    Queue Position Feedback *38-11*
    Receiving Calls *38-11*
    System Messages *38-11*
    Terminal Requirements *38-11*
  Mnemonic Dialing *38-14, 38-22*
  Modem *38-6*
  Modem Pool Identification *38-11*
  Modem Pooling *38-16*
  Modem Pooling Conversion Resource *38-10*
  Off-Premises Connections *38-2*
  One Button Transfer *38-10*
  On-Premises Connections *38-2*
  PC/PBX Connection *38-4*
  Preindication *38-10*
  Queue Position Feedback *38-11*
  Receiving Calls on a Data Terminal *38-11*
  Return-to-Voice *38-10*
  Terminal Equipment Used *38-3*
  Terminals Used

Data Call Setup—*Contd*
Terminals Used—*Contd*
3270 Terminals and Cluster Controllers *38-4*
510D *38-4*
513 BCT *38-3*
515 BCT *38-4*
7205H Voice Terminal *38-4*
7404D VDS (Voice Data Station) *38-3*
7405D Digital Voice Terminal *38-3*
Data Terminal Only Configuration *38-3*
Integrated Voice and Data Terminals *38-4*
Personal Computers *38-4*
Single-Line Voice Terminal *38-3*
Tone Detector *38-31*
Two Stage Dialing *38-26*
Voice Terminal Dialing *38-9*
Voice Terminal Transfer *38-9*
Data Calling
Hot Line *58-1*
Data Channel Circuit Pack TN403
CMDR *34-23*
Data Communications
Data Communications Access
See DCA *39-1*
Applications
Host Computer Dialing *D-5*
B8ZS Format *D-25*
Basic Digital Signals
Bipolar Signals *D-4*
Unipolar Signals *D-3*
Data Modules
EIA Port Board and MADU *D-6*
MPDM (Modular Processor Data Module) *D-5*
MTDM (Modular Trunk Data Module) *D-5*
Features and Services *D-1*
Framing Patterns
D4 Framing *D-26*
Extended Superframe *D-27*
Host Computer Dialing
Call Progress Messages *D-9*
Examples *D-18*
Keyboard Dialing *D-6*
Hot Line *58-1*
Data Hot Line
Hot Line *58-3*
Data Hot Line Service
Data Hot Line Service—*Contd*
Hot Line *58-1*
Data Modules
Data Call Setup *38-31*
Host Computer Access *56-4, 56-8*
Host Computer Dialing
EIA Port Board and MADU *D-6*
MPDM (Modular Processor Data Module) *D-5*
MTDM (Modular Trunk Data Module) *D-5*
Data Port Trunk Circuit
DCA *39-11*
Data Preindication
Data Call Setup *38-10*
Modem Pooling *78-3*
Data Privacy
See Data Protection *40-1*
Data Protection
DMI *43-6*
ISN *60-5*
Permanent *40-1*
Temporary *40-1*
Data Rates
ACCUNET Service *3-4, 61-14*
Data Call Setup *38-1*
ISDN/PRI *3-4, 61-14*
Keyboard Dialing *D-6*
Data Restriction
See Data Protection *40-1*
Data Sets/Modems
DCA *39-2, 39-11*
Modem Pooling *78-6*
Data Terminal (Keyboard) Dialing
Data Communications *D-5*
Modem Pooling *78-3*
DATAPHONE Digital Service
See Off-Premise Data-Only Extension *82-4*
DCA (Data Communications Access)
Analog Interface *39-1*
Attendant Assistance *39-4*
Attendant Intervention *39-9*
Data Call Setup *39-3*
ETN *39-4*
Extension Number Steering *39-10*
FRL *39-9*
Host Computer Access *39-2*
Modems/Data Sets *39-2, 39-11*
Port
Modem Pooling *78-7*

DCIU (Data Communications Interface Unit)
Administration
AP-16 Link *G-15*
AUDIX Adjunct Link *G-23*
BX.25 Link Characteristics *G-16*
DCS *G-13*
Link to a System 75 Switch *G-37*
Link to DIMENSION System *G-29*
Network Channel for a Hop *G-45*
Alternate Routing
Data Path Looping *G-9*
Network Channels *G-5, G-8*
Applications *G-1*
AUDIX *14-14, 14-19*
DCIU Messages
Alternate Routing *G-5, G-8*
Fixed Routing *G-9*
Routing on Failure *G-9*
DCS
Alternate Routing *G-5, G-8*
Destination Routing Code *G-8*
Direct Linkage *G-7*
Fixed Network Channels *G-9*
Flexible Port Reservations *49-11*
Indirect Linkage *G-7*
Linkage Minimization *G-6*
Linkage Options *G-7*
Network Channels *G-8*
Postage *G-9*
Routing on Failure *G-9*
Description *G-7Direct*
Alternate Routing *G-8*
BX.25 Protocol *G-2, G-6*
Data Path *G-1, G-3*
Data Path Looping *G-9*
Destination Routing Code *G-8*
DMA (Direct Memory Access) *G-2*
Duplicated Processor *G-11*
Fixed Network Channels *G-5, G-9*
Fixed Port Reservations *G-4*
Hop *G-7*
Indirect Linkage *G-7*
Interface *G-11*
Link *G-2, G-3*
Linkage Minimization *G-6*
Linkage Options *G-6*
Logical Channels *G-4*
Modems *G-11*
Network Channels *G-4, G-8*
Packet Switching *G-6*

DCIU (Data Communications Interface Unit)—*Contd*
Description—*Contd*
Ports *G-2, G-4*
Postage *G-9*
PVC (Permanent Virtual Circuit) *G-5*
Releases *G-2*
Routing on Failure *G-9*
RS-232C Protocol *G-11*
RS-449 Protocol *G-11*
SCI (Switch Communication Interface) *G-2*
Signaling Link *G-3*
Switch Link Ports *G-4*
Virtual Circuits *G-1*
Flexible Administration *G-47*
Flexible DCIU Port Reservations *G-47*
Flexible Port Assignment *G-48*
Flexible Port Reservations *G-47*
Link
ACD *17-59*
Link Logical Channel Pair *G-3*
Reserved or Unreserved Status *G-48*
Standard AP Reservations and Assignments *G-48*
DCIU Link
Using Dedicated Switch Connections *41-2*
DCP (Digital Communications Protocol)
DMI *43-4*
Hot Line *58-2*
Modem Pooling *78-1*
Off-Premises Data-Only Extension *82-1*
DCS (Distributed Communications System)
AAR *49-22, 49-25*
Adjunct Configurations
AUDIX *49-18*
MCS (Message Center Service) *49-19*
Adjunct Processors *49-26*
Alternate Routing
Data Path Looping *49-9*
Destination Routing Code *49-7, G-8*
Example *49-7*
Fixed Network Channels *49-7, 49-8, G-9*
Network Channels *49-7, G-5*
Postage *49-7, G-9*
Release 2 DCIU *49-4*
Routing on Failure *49-7, G-9*
Stopping an Infinite Loop *49-10*
APs, Local *49-12*

DCS (Distributed Communications System)—*Contd*
BX.25 Link Characteristics *G-16*
BX.25 Protocol *49-4, G-6*
Call Coverage *25-14*
Centralized Messaging *49-13, 49-26*
Cluster *49-2*
Data Path *49-2*
Data Path Looping *49-9*
DCIU Administration *49-42, G-13*
DCIU (Data Communications Interface Unit) *49-3*
DCIU Hop *49-16*
DCIU Link *49-2*
DCIU Messages
Alternate Routing *49-6, G-8*
Fixed Routing *49-4, 49-7, G-5*
PVC (Permanent Virtual Circuit) *G-5*
Routing on Failure *49-7*
DCIU Ports
Fixed DCIU Port Assignment *49-11*
Flexible DCIU Port Reservations *49-11*
Reservation Versus Assignment *49-11*
Destination Routing Code *49-7*
Dialing Plan
4-Digit Dialing *49-21, 49-26*
5-Digit Dialing *49-22, 49-26*
Constraints *49-25*
Extension Number Portability *49-23*
Extension Number Steering *49-21*
Prefix Digit *49-22*
DIMENSION Systems *49-2*
Direct Linkage *49-6*
DMA (Direct Memory Access) *49-4*
DS1 *44-12*
ES (Enhanced Services) Messaging *49-12*
Extension Number Portability *49-23*
Extension Number Steering *49-21, 49-22, 49-25*
Feature Transparency *49-2, 49-27*
Fixed Network Channels *49-4, 49-7*
Gateway Connection *49-1*
General Concepts
Data Path *49-2*
DCIU Link *49-2*
Feature Transparency *49-2*
Logical Channels *49-3*
Mixed Clusters *49-2*
The Cluster *49-2*
Virtual Circuits *49-3*

DCS (Distributed Communications System)—*Contd*
Hop *49-5*
Indirect Linkage *49-5*
ISDN/PRI *49-31*
Link Logical Channel Pair *49-3*
Linkage Minimization *49-5, G-6*
Local APs *49-12*
Local Messaging *49-13*
Logical Channels *49-3*
LWC *70-10*
Main/Satellite *49-21, 49-25*
Mixed Clusters *49-2*
N-digit Message Set *49-12*
Network Channel Priority *49-26*
Network Channels *49-4, 49-7, G-4*
Nodes *49-1*
Port Reservation Versus Assignment *49-11, G-47*
Ports *49-3*
Postage *49-7*
Precedence Calling *87-1*
Prefix Digit *49-22*
Priority *49-26*
Private Network Access *49-1, 49-27*
PVC (Permanent Virtual Circuits) *49-4*
Remote Messaging *49-15, 49-17*
Remote Messaging With DCIU Hop *49-16, 49-18*
Reserved or Unreserved Status *49-12*
Restricted Trunk Types *49-27*
SCI (Switch Communication Interface) *49-4*
Standard AP Reservations and Assignments *49-12*
Status, Reserved or Unreserved *49-12*
Stopping an Infinite Loop *49-10*
Switch Link *49-4*
System 75 Nodes *49-2*
Transparency *49-2, 49-27*
Trunks and Trunk Groups *49-27*
Uniform Numbering Plan *49-20*
Virtual Circuits *49-3*
DDC (Direct Department Calling)
Group Limits *45-2*
Hunting *45-1*
LDN *45-1*
Recorded Announcement *45-2*
DDD (Direct Distance Dialing) Modems
Modem Pooling *78-6*
DDS Data Port Adapter

DDS Data Port Adapter—*Contd*
DS1 *44-16*
Deactivating Trunk Group Recording
CMDR *34-13*
SMDR *107-14*
Dedicated Switch Connections
3270 Series Protocol Converters *41-6*
Capacity *41-6*
Data Connectivity *41-1*
DCIU Link *41-2*
DS1 Interface *41-10*
DS1 Suppressed Signaling Trunk *41-2*
DS1 Trunks *41-2, 41-7*
EIA Ports *41-6*
Equipment Combinations *41-7*
Intermodule Links *41-6*
Leased Line Modems *41-1*
Mixed Analog and Digital *41-8*
Processor Data Modules *41-6*
Rotary Dialing *41-7*
Switch Services Not Available *41-7*
Trunk Data Modules *41-6*
Defense Communications System
Precedence Calling *87-1*
Demand Print of Delivered Messages
LWC *70-6*
Demand Printout
LWC *70-6*
Designated Console
ACA *19-3*
Dial Access to Attendant *42-1*
Dial, Intercom *64-1*
Dialed Number Identification Service
ACD *17-15, 17-46*
Call Vectoring *31-6*
EUCD *50-13, 50-31*
Dialing, Abbreviated *2-1*
Dialing Plan
5-Digit Dialing *49-22*
DCS *49-20, 49-26*
Dialing, Through *111-1*
Dialing, Touch-Tone *115-1*
Dictation
See Recorded Telephone Dictation Access *94-1*
DID (Direct Inward Dialing)
Data Calls *46-2*
Extension Number Steering *46-1*
Digital Multiplexed Interface
See DMI *43-1*
Digital Service (DS) Numbers
DS1 *44-2*
Digital Service Interface
See DS1 *44-1*
Digital Voice Terminal
See 7400D Series
Direct Department Calling
See DDC
Direct Hunting
See Linear Hunting *59-1*
Direct Inward Dialing
See DID
Direct Output
Memory
SMDR *107-15*
Optional Equipment
SMDR *107-23*
Port
SMDR *107-7*
Unit, J59209A
SMDR *107-23*
Direct Outward Dialing (DOD) *47-1*
Direct Trunk Group Selection, Attendant *9-1*
Direct-In Termination
See DID
Display
Attendant *10-1*
Display—Voice Terminal
Applications Processor *48-18*
ASCII Character Set *48-13*
Call Coverage *25-8, 25-12, 48-11*
Compaction of Names Data Base *48-14*
Function Buttons *48-2, 48-14*
Identification Data Base *48-13*
Information Sources *48-1*
Integrated Displays *48-12*
Lock/Unlock Option *48-10, 48-15, 70-4*
LWC *70-6*
Modes *48-1*
Name Records Available *48-14*
Personal Computers *48-6, 48-18*
Sample Messages *48-6*
Scrolling *48-13*
Security *48-15*
Terminal Models *48-12*
Terminals *48-12*
Time-out *48-14*
Truncation *48-13*
Truncation Mark *48-13*

Display—Voice Terminal—*Contd*
With Data Terminals *48-5, 48-12, 48-15, 48-17*
Distinctive Ringing
One-burst *103-1*
Three-burst *103-1*
Timing *103-1*
Two-burst *103-1*
Types *103-1*
Distributed Communications System
See DCS
Diversion
See Attendant Diversion
Diversion to Recorded Announcement
Intercept Treatment *62-1*
DMA (Direct Memory Access)
DCIU *G-2*
DCS *49-4*
DMI (Digital Multiplexed Interface)
24th Channel Signaling *43-1*
ACCUNET Service Interface *43-4*
AVD *43-1*
B Channels *43-1*
BOS (Bit Oriented Signaling) *43-1*
Channels *43-1*
Common Channel Signaling *43-1*
D Channel *43-1*
Data Call Setup *43-5*
Data Protection *43-6*
DCP (Digital Communications Protocol) *43-4*
Differences Between Versions *43-6*
DS0, DS1 *43-1*
DS1 *43-1*
Host Computer Access *43-4*
Host-to-Host Connections *43-5*
Interworking *43-2*
ISDN Compatibility *43-1*
Modem Pooling *43-5*
MOS (Message Oriented Signaling *43-2*
T1 Carrier *43-1*
DNIS (Dialed Number Identification Service)
ACD *17-15, 17-46*
Call Vectoring *31-6*
EUCD *50-13, 50-31*
DOD (Direct Outward Dialing) *47-1*
Don't Answer
Call Coverage *25-3*
Call Forwarding *26-1, 27-1*
DS1 Interface
DS1 Interface—*Contd*
23 Channel Format *44-5*
24 Channel Format *44-2*
24th Channel Signaling *44-5*
56 Kbps Clear Channel Service *44-6, 44-11*
ACCUNET Service Interface *44-11*
Alternative Carriers *44-2*
Applications for Voice-Grade Service *44-5*
AVD (Alternate Voice/Data) *44-5*
Bit Robbed Signaling *44-16*
Bundling Format; Voice Channel Expansion *44-9*
CDM (Channel Division Multiplexer) *44-9*
CEM (Channel Expansion Multiplexer) *44-8, 44-13, 44-17*
Channels *44-3*
Channel-Trunk Arrangements *44-13*
DS1 Interface Circuit Pack
ACCUNET Service Interface *3-4*
Compressed Channels *44-8*
D4 Channel Bank *44-5, 44-10, 44-12*
Data Call Setup *38-25*
Data Features *44-12*
Data Preindication *44-6*
DCS (Distributed Communications System) *44-12*
Dedicated Switch Connections *41-2, 41-10*
Digital Service (DS) Numbers *44-2*
DS0 *44-2*
Enhanced DIMENSION System *44-5, 44-10, 44-12, 44-16*
Fiber Optic Links *44-2*
Full Rate Data Channels *44-13*
Microwave Transmission *44-2*
Mixed Networks *44-13*
Mixing Channel Types *44-13*
Modems *44-5*
Off-Premise Data-Only Extension *82-1, 82-4*
Private Network Access *44-5*
Public Network Access *44-5*
Remote Groups *44-1*
SCS (System Clock Synchronizer) *44-6, 44-16*
Service Arrangements *44-4*
Supporting Services *44-6*
System 85 Synchronization System *44-6*
T1 Carrier *44-2*
Tie Trunk, digital to analog network *44-12*
Trunk Routing Features *44-12*

DS1 Interface Circuit Pack—*Contd*
Trunks *44-3*
VBR (Variable Bit-Robbed) Signaling; Voice Channel Expansion *44-8*
Voice-Grade Service *44-5*
DS1 Port Carrier
ACCUNET Service Interface *3-4*
DS1 *44-15*
ISDN/PRI *61-23*
DSU (Data Service Unit)
Off-Premises Data-Only Extension *82-4*
DTE (Data Terminal Equipment)
ISN *60-9*
DTMF (Dual Tone Multi-Frequency) Signaling
Precedence Calling *87-2*
Dual Coverage Paths
Call Coverage *25-3*
DXS (Direct Extension Selection)
See Attendant DXS With BLF
Dynamic Trunk Type
Enhanced Trunking *F-2*
ISDN *61-13*

E

EIA Ports
Host Computer Access *56-2, 56-8*
ISN *60-9*
EIA RS232C Cable
PC/PBX Connection *85-6*
EIA Terminal
Display—Voice Terminal *48-17*
EIA Trunk Ports
ISN *60-1*
Emergency Calls
Call Vectoring *31-5*
Emergency Transfer
See Power Failure Transfer
Encodes
VFCDR *126-14*
Enhanced DIMENSION System
DS1 *44-5, 44-10, 44-12, 44-16*
Enhanced Trunking
Administrable Treatment of Permanent Incoming Seizure *F-11*
Applications by Signaling Type *F-13*
Automatic Detection, Busy Out, and Service Alerting *F-11*
Enhanced Trunking—*Contd*
Direct Access to Delay Dial and Wink Start Trunks *F-9*
Dynamic Trunk Type *F-2*
E&M Delay Dial *F-8*
E&M Wink Start *F-8*
Enhanced Trunk Signaling *F-2*
Error Recovery *F-9*
Error Recovery for DS1 Interface Failure *F-12*
Far-end Removal from Service on Local Busy-out *F-11*
Glare Detection and Handling *F-10*
Ground Start Signaling Sequence *F-12*
Hyperactive DS1 Trunks *F-12*
Improper Trunk Signaling *F-11*
ISDN Dynamic Trunk Type *F-2*
ISDN Trunk Signaling *F-2*
ISDN Trunking Services *F-2*
Partitioned Trunk Types *F-13*
Retry on Failure of Outgoing Trunk Seizure *F-10*
Scanning and Recovery Mechanism for Hyperactive DS1 Trunks *F-12*
Separation of Trunk Type and Signaling *F-2*
True Wink Start and Delay Dial Signaling on Network Trunks *F-7*
Trunk Seizure Problems *F-9*
Trunking Services *F-1*
Universal Time-Out Sequence *F-7*
Universal Trunk Sequence *F-7*
Enhanced Uniform Call Distribution
See EUCD *50-1*
EPSCS (Enhanced Private Switching Arrangement)
See APLT *4-1*
ES (Enhances Services) Messaging
DCS *49-12*
Estimating Record Density
CMDR *34-15*
ETN (Electronic Tandem Network)
DCA *39-4*
EUCD (Enhanced Uniform Call Distribution)
Abandon Call Search *50-5*
Agent *50-1*
Agent Override *50-9*
Answer Supervision *50-5*
Arrangement *50-6*
Automatic Answering *50-15*
City-of-Origin Announcement *50-11*

EUCD (Enhanced Uniform Call Distribution)—*Contd*
Display
City-of-Origin *50-11*
Queue-of-Origin *50-11*
DNIS *50-13, 50-31*
Forwarding *50-7*
Gateway Service to AUDIX *50-1*
Ghost Calls *50-5*
Hunting
Circular *50-2*
Linear *50-1*
Interflow *50-7*
Intraflow *50-7*
Intraflow—All Chaining *50-7*
Intraflow—Threshold Chaining *50-7*
Lamp Monitoring *50-4*
LDN Service *50-1*
Legal Considerations *50-30*
Music-on-Hold *50-10*
Overload Balancing *50-7*
Parameters
Configurations *50-30*
Inflow Level *50-8*
Overflow Level *50-8*
Primary Terminal *50-1*
Priority Queuing *50-2*
Queue-of-Origin Announcement *50-11*
Recorded Announcements *50-9*
Routing Methods *50-3*
Single-Appearance Terminals *50-32*
Split *50-1*
Split Supervisor *50-5*
System Supervisor *50-6*
Warning Tone *50-9, 50-17*
Zip Tone *50-10*
Event Count
ACD (Automatic Call Distribution) *17-21*
Executive Call Handling
Bridged Configurations *I-3*
Combined Configurations *I-31*
Configuration Designations *I-2*
Configuration Format *I-1*
Coverage Configurations *I-17*
General Arrangements *I-1*
Executive Override
See Override *83-1*
Extension Last Dialed *68-1*
Extension Number Portability
5-Digit Dialing *51-4, 51-7*
Extension Number Portability—*Contd*
Architectural Requirements *51-5*
Call Routing *51-9*
Compatibility *51-3*
DCS *51-7*
ETN *51-7*
Extension Number Steering *51-3*
Network Location Codes (RNX) *51-5*
Portability Subnetwork *51-2, 51-7*
Ported Extension Numbers *51-7*
Prefix Dialing *51-4*
RNX *51-5*
Subnetworking *51-6*
Extension Number Steering
DCA *39-10*
DCS *49-21, 49-25*
DID *46-1*
Extension Number Portability *51-3*
Host Computer Access *56-1*
Main/Satellite/Tributary *74-4*
Multiple LDN *80-5*
Single-Digit Steering *74-4*
SMDR *107-15*
Tenant Services *109-12*
Extensions
See Appendix E

F

Facilities Restriction Level
See FRL *52-1*
Facility Busy Indications
See Terminal Busy Indications *110-1*
FADS (Force Administration Data System)
CAS *33-4, 53-1*
CAS Traffic Data *53-2*
CCS *53-2*
Display Unit
Commands *53-1*
Time Out *53-1*
Measurement Limits for UCD *53-2*
Output *53-1*
Traffic Data *53-2*
UCD *53-1, 125-3*
FEAC (Forced Entry of Account Code)
SMDR *107-14*
FEAC (Forced Entry of Account Codes) *107-2*
Feature Transparency
DCS *49-2*

Fiber Optic Links
DS1 *44-2*
Fixed Routing of DCIU Messages
DCIU *G-9*
DCS *49-7*
Flash Button
See Recall Signaling *93-1*
Flexible Intercept
See Intercept Treatment *62-1*
Flexible Night Service
See Unattended Console Service *123-1*
Flexible Routing Selection
See ARS *21-1*
Flow Diagram *16-6AAR*
ARS *21-8*
Queuing *91-4*
Unattended Console Service *121-3*
FM (Facilities Management)
Administration Facilities *C-2*
Force Administration Data System
See FADS *53-1*
Forced Entry of Account Codes (FEAC)
See VFCDR *126-4, 126-12*
Forced-Busy Command Timer
Call Vectoring *31-22*
Forced-Disconnect Command Timer
Call Vectoring *31-22*
Foreign Exchange Access
See FX Access *54-1*
Formatting Unit, COMM-Stor II
SMDR *107-23*
Forwarding
See Call Forwarding ,
FRL (Facilities Restriction Level) *16-1AAR*
AAR *52-1*
Alternate FRLs *52-2*
ARS *21-1, 21-12, 52-1*
Authorization Codes *15-1, 52-1*
DCA *39-9*
Default FRL *52-1*
Hierarchy of Levels *52-1*
TCM (Traveling Class Mark) *52-2*
Full Rate Data Channels
DS1 *44-13*
FX (Foreign Exchange) Access
Attendant Procedures *54-1*
CO Services *54-1*
DOD *54-2*

G

G15A Handset
CAS *33-10*
G1-Type Touch-tone Receiver
Radio Paging Access *92-6*
Gate
See Split *17-1*
Gateway Service
Precedence Calling *87-1*
Generalized Route Selection *16-4AAR*
Ghost Calls
ACD *17-8*
EUCD *50-5*
Glare
See Enhanced Trunking *F-10*
Go-To-Step Command Counter
Call Vectoring *31-22*
GPP (General Purpose Port)
Host Computer Access *56-8*
Modem Pooling *78-7*
Ground Start Button
Power Failure Transfer *86-6*
Group List
Abbreviated Dialing *2-5*
Groups
DDC *45-2*
Hunting *59-2*
Manual Signaling *76-1*

H

Hands Free Operation
ACD *17-18*
EUCD *50-15*
Handset, G15A
CAS *33-10*
Hard Hold
See Hold
Headset
3122 Starset II
ACD *17-60*
EUCD *50-42*
3122 Starset Supra
ACD *17-60*
EUCD *50-42*
60A
CAS *33-10*
KS-20778
CAS *33-10*

HNPA (Home Numbering Plan Area)
ARS *21-2*
Hold
Hard Hold *55-1*
Soft Hold *55-1*
Switchhook Flash *55-4*
Home Terminal *E-5*
Host Computer Access
ACU (Automatic Calling Unit) *56-2*
Data Modules *56-4*
DCP *56-1*
DMI *43-1*
EIA Port Circuits *56-2*
Extension Number Steering *56-1*
Host Computer Automatic Dialing *56-2*
Limits *56-4*
MADU *56-2*
Protocol Conversion *56-1*
Reduced Cost Configuration *56-2*
Terminal Dialing *56-2*
Trunk Group Limitations *56-4*
Via DCA *39-1*
Host Computer Connectivity
Analog Interface Features *38-1, 38-15*
Digital Interface Features *38-16, 43-1, 56-1, D-5*
Mixed Interfaces *38-16*
Host Computer Dialing *D-5*
Basic Operational Sequence *D-17*
Call Progress Messages
Incoming Call Messages *D-13*
Outgoing Call Messages *D-9*
Data Call Setup *38-19*
Data Communications
Data Modules *D-5*
Examples *D-18*
Keyboard Dialing *D-6*
Data Modules
EIA Port Board and MADU *D-6*
MPDM (Modular Processor Data Module) *D-5*
MTDM (Modular Trunk Data Module) *D-5*
Interface Lead States *D-15*
Hot Line
Analog Data Call Stations *58-1*
Applications
Dedicated Use Data Terminals *58-3*
Emergency Services *58-3*
Manual Line to Attendant *58-3*
Hot Line—*Contd*
Applications—*Contd*
Paging Service *58-3*
Data Call Service *38-14, 58-1*
DCP (Digital Communications Protocol) *58-2*
Digital Data Call Stations *58-2*
Effects of the Data Button *58-2*
Limits *58-6*
Versus Dedicated Switch Connections *58-3*
Voice Service *58-1*
Hub Switch
Precedence Calling *87-1*
Hundred Call Seconds
See CCS *53-2*
Hunting
ACD
Circular *17-3*
Linear *17-2*
Most Idle Agent *17-3*
Call Forwarding *28-8*
DDC *45-1*
EUCD
Circular *50-2*
Direct (Linear) *50-1*
Linear *50-1*
Groups *59-2*
Patterns
Circular *59-1*
Linear *59-1*
UCD *125-2*
Hybrid Voice Terminal
See 7200H Series

I

IBM Compatible PCs
PC/PBX Connection *85-5*
ICI (Incoming Call Identification)
Attendant Display *10-2*
Visually Impaired Attendant Service *127-1*
IDDD (International Direct Distance Dialing) *16-4AAR*
IDT (Integrated Display Terminal)
See Display—Voice Terminal *48-18*
Image of the First Appearance
Call Coverage *25-6*
Images
Images, Appearances, and Extensions

Images, Appearances, and Extensions—*Contd*
Relationship *E-4*
Shared Extensions *E-4*
See Appendix E
Implied Principal Addressing
Call Coverage *25-7*
Indications, Terminal Busy *110-1*
Inferred Routing *16-9See AAR and ARS*
Inflow Level
ACD *17-10*
EUCD *50-8*
Information Announcement
Call Vectoring *31-2*
Information Available
CMDR *34-3*
SMDR *107-3*
Information Systems Network
See ISN Interface *60-1*
Integrated Alerting and Notification
See Unified Messaging *124-1*
Integrated Message Notification
See Unified Messaging *124-1*
Integrated Preparation
See Unified Messaging *124-1*
Integrated Voice and Data Terminals
Data Call Setup *38-4*
Integrity Checks
Call Vectoring *31-23*
Intercept Treatment
Announcement Barge-In *62-3*
Attendant Diversion to Recorded Announcement *62-1*
Conditions *62-2*
Delays *62-3*
Exclusions *62-3*
Queuing Delays *62-3*
Recorded Announcement Limit *62-3*
Recorded Announcement Sets *62-3*
Types
Attendant Intercept *62-1*
Intercept Tone *62-1*
Recorded Announcement *62-1*
Recorded Announcement With Time-Out to Attendant *62-1*
Reorder Tone *62-1*
Intercom—Automatic *63-1*
Intercom—Dial *64-1*
Intercom Group *64-1, 64-2*
Limits *64-2*
Intercom—Manual *65-1*
Intercom—Manual—*Contd*
Groups *65-2*
Limits *65-2*
Interexchange Carrier (IXC) Access
See IXC Access *66-1*
Interface Features
ACCUNET Service Interface *3-1*
CMDR (Centralized Message Detail Recording) *34-1*
DMI *43-1*
DS1 *44-1*
ISN Interface *60-2*
Interface Unit, Z3A3 ADU
ISN *60-9*
Interflow
ACD *17-9*
EUCD *50-7*
Interpartition Access
See IPA *67-1*
Interposition Calling and Transfer, Attendant *11-1*
Interworking
ISDN *61-7*
Intraflow
ACD *17-9*
Call Vectoring *31-15*
EUCD *50-7*
Intraflow—All Chaining
ACD *17-9*
EUCD *50-7*
Intraflow—Threshold Chaining
ACD *17-9*
EUCD *50-7*
Inward Voice Terminal Restriction *100-1*
INWATS
See WATS Access *128-1*
IPA (Interpartition Access)
Attendant Direct *67-1*
Full Access *67-1*
Legal Considerations *67-4*
See also Tenant Services *67-1*
ISDN (Integrated Services Digital Network)
The B8ZS Format *D-25*
ISDN/PRI (Integrated Services Digital Network/Primary Rate Interface) *16-10COS (Class-of-Service), 16-11Bearer Capability*
2 B plus D *61-2*
23 B plus D *61-4*
B (Bearer) Channels *61-4, 61-7*
Bearer Capability *21-14, 61-15*

ISDN/PRI (Integrated Services Digital Network/Primary Rate Interface)—*Contd*
BOS (Bit Oriented Signaling) *61-7*
BRI (Basic Rate Interface) *61-2, 61-3*
Call Processing *61-7*
CCITT (International Telegraph and Telephone Consultive Committee) *61-1*
Class of Service *61-1*
Common Elements *61-5*
Concept *61-1*
COS (Class-of-Service) *21-13, 61-15, 61-21*
D (Data) Channel *61-4, 61-7*
D-Channel Signaling *61-7*
DCP (Digital Communications Protocol) *61-2*
Definitions *61-2*
DMI BOS *61-16*
DMI MOS *61-17*
Dynamic Trunk Type *61-13, F-2*
End-to-End Connectivity *61-8*
Extension Number Steering *61-19*
Interworking *61-8*
ISO OSI Reference Model *61-7*
Layered Protocols *61-5, 61-7*
Legal Considerations *61-14*
MOS (Message Oriented Signaling) *61-7*
Network Features and Services
Call-by-Call Service Selection *61-10*
Calling and Connected Party Display *61-10*
CDR Recording of ISDN Calls *61-12*
Channel Negotiation *61-10*
Networking Considerations *61-14*
Open Systems Concept *61-6*
Packet Service *61-4*
PRI (Primary Rate Interface) *61-4, 61-7*
Protocol Differences *61-13*
Public and Private ISDN Connections *61-7*
Signaling *61-7, F-2*
Trunking Services *F-2*
VFCDR *126-11*
ISN (Information Systems Network) Interface
2-Stage Dialing *60-5*
Accessing System 85 *60-4*
ADU (Asynchronous Data Unit) *60-2, 60-9*
AIM (Asynchronous Interface Module *60-2*
Common Printer *60-5*
Common Terminal Administration *60-5*
Connectivity to System 85 *60-1*
Data Protection *60-5*
ISN (Information Systems Network) Interface—*Contd*
Dumb Terminal Mode Requirement *60-5*
EIA Trunk Ports *60-1*
Gateway Services *60-2*
Host Computer Dialing *60-3*
ISN Concentrator *60-2*
Keyboard Dialing *60-3*
Limited Distance Modem *60-9*
Optical Fiber Carrier *60-1*
Packet Controller *60-1*
Protocol Conversion *60-2*
Return-to-Voice *60-3*
Synergism with System 85 *60-2*
Terminal Dialing Disconnect *60-3*
Trunk Characteristics *60-5*
Voice Terminal Dialing *60-3*
Z3A3 ADU *60-2*
ISO (International Standards Organization)
ISDN *61-5*
IXC (Interexchange Carrier) Access *16-4AAR*
AAR/ARS *66-1*
DID *66-1*
Subnetwork Trunking *66-1*

J

J58824CD Interface Circuit
Radio Paging Access *92-6*
J58827E, L1 and L2, Recorded Telephone Dictation Unit
Recorded Telephone Dictation Access *94-4*
J58886H, 9-Track Tape Unit
SMDR *107-23*
J58889N, L1, Frequency Generator Unit
Recorded Telephone Dictation Access *94-4*
J58889N, L2, Frequency Interrupter Unit
Recorded Telephone Dictation Access *94-4*
J59209A, Direct Output Unit
SMDR *107-23*
Joining Calls
See Meet-Me Transfer *116-2*

K

Keyboard Dialing
Data Call Setup *38-10*
Data Communications
Host Computer Dialing *D-6*

Keyboard Dialing—*Contd*
Modem Pooling *78-3*
KS-19252, L7 Adapter
FADS *53-4*
KS-20778 Headset
CAS *33-10*
KS-22077, 9-Track Tape Drive
SMDR *107-23*
KS-22078, Tape Formatter
SMDR *107-23*
KS-65270 Digital Announcer
DDC *45-7*
EUCD *50-41*
Intercept Treatment *17-60, 62-6*
UCD *125-8*

L

Lamp Monitoring
ACD *17-6*
EUCD *50-4*
LAN (Local Area Network)
ISN *60-1*
Last Extension Dialed *68-1*
See also LND (Last Number Dialed) *69-1*
Last Number Dialed
See also LXD (Last Extension Dialed) *68-1*
See LND *69-1*
LC316 Memory Board
CMDR *34-15*
LC459B Memory Board
CMDR *34-15*
LDN (Listed Directory Number) Service
ACD *17-1*
DDC *45-1*
EUCD *50-1*
Multiple LDN *80-1*
Remote Access *95-1*
UCD *125-1*
Least Cost Routing
See ARS *21-1*
Leave Word Calling
See LWC *70-1*
Legal Considerations
ACD *17-42*
EUCD *50-30*
IPA *67-4*
ISDN/PRI *61-14*
Malicious Call Trace *75-8*
Legal Considerations—*Contd*
Special Access *61-14*
Tenant Services *109-11*
Limited Distance Modem
ISN *60-9*
Limits
Button Table Word Requirements *A-3*
Feature Limits *A-1*
Line Limits *A-1*
Network Parameter Limits *A-7*
System Parameter Limits *A-5*
Trunk Limits *A-6*
Line Lockout *71-1*
Line, Personal Central Office *84-1*
Linear Hunting
ACD *17-2*
EUCD *50-1*
Hunting *59-1*
Line/Feature Status Indication
Green Status Lamp *72-1*
Red Status Lamp *72-1*
Lines, Busy Verification of *24-1*
Links
DCIU *G-2*
Listed Directory Numbers
See LDN and Multiple LDN *80-1*
LND (Last Number Dialed)
Dialed Number Storage *69-1*
Redial Delay Interval *69-10*
Register *69-1*
Local Storage Unit
See LSU *34-9*
Location Code (RNX) *16-3AAR*
Lockout, Attendant
See Privacy *89-1*
Lockout, Line *71-1*
Lock/Unlock Option
Display—Voice Terminal *48-10*
LWC *70-4*
Logical Channels
DCIU *G-4*
DCS *49-3*
LORAIN Voice Switched Gain Amplifier
Multiple LDN *80-6*
Remote Access *95-8*
Loudspeaker Paging Access
2-Minute Recall *73-9*
Administrable Recall Button *73-9*
All Zones Paging *73-1*
Answer-Back *73-2*

Loudspeaker Paging Access—*Contd*
Attendant Direct Access *73-1*
Dial Access *73-1*
Music Option *73-2*
Paging Zones *73-1*
Priority Paging *73-1*
Zone Paging *73-2*
LSU (Local Storage Unit)
CMDR
94A LSU *34-9*
Memory Requirements *34-15*
SMDR *107-8*
LWC (Leave Word Calling)
AUDIX *14-2*
Automatic Message Waiting Lamp *70-3*
Call Coverage *25-15, 70-3*
Conditions For Use *70-2*
Demand Print of Delivered Messages *70-6*
Demand Printout *70-6*
Display—Voice Terminal
Locking the Display *70-8*
Unlocking the Display *70-8*
Feature Activation Code *70-5*
In a DCS Environment
On AUDIX *70-10*
On the AP *70-10*
On the Switch *70-10*
Leaving a Message *70-4*
Lock/Unlock Option *70-4*
Message Access *70-3, 70-6*
Message Cancellation *70-3, 70-5*
Message Capacity *70-9*
Message Retrieval *70-3*
Message Storage
On an AP *70-2*
On an AUDIX Adjunct *70-2*
On the Switch *70-2*
Options *70-1*
Other Messaging Services
AUDIX *70-8*
Call Coverage *70-7*
Demand Print of Delivered Messages *70-6*
Demand Printout *70-6*
Display—Voice Terminal *70-6*
Message Center *70-6*
Redirected Calls *70-9*
Security *70-3*
Unified Messaging *124-3*

M

MAAP (Maintenance and Administration Panel)
Administration Facilities *C-1*
MADU (Multiple Asynchronous Data Unit)
Host Computer Access *56-2, 56-8*
Host Computer Dialing *D-6*
Main Location
CAS *33-1*
Main/Satellite/Tributary
DCS *49-21*
ETA (Extended Trunk Access) *74-4*
Extension Number Steering *74-4*
Indialing Thru Main *74-2*
Partially Connected Configuration *74-2*
Single-Digit Steering *74-4*
Transfer *74-2*
Tributary Location *74-1*
Uniform Numbering *74-3*
Maintenance Busy
Trunk Verification by Voice Terminal *119-4*
Malicious Call Trace
Accidental Activation *75-9*
ACD
Agent Activation *75-10*
Agent Override *75-10*
City/Queue-of-Origin Announcement *75-10*
CMS (Call Management System) *75-10*
Activation and Control *75-1*
Attendant Alerting *75-1*
Attendant Console *75-16*
Attendant Console Lockup *75-8*
Attendant Displays *75-1*
Attendant Procedures *75-4*
Class-of-Service *75-1*
Controlling Attendant *75-1*
Dial Access Code *75-7*
Feature Button *75-9*
Legal Considerations *75-8*
Recorder *75-1, 75-16*
Switch Capacity *75-9*
Time-out *75-8*
Trunk Equipment Locations *75-7*
Manual Exclusion
See Privacy *90-1*
Manual Intercom *65-1*
Manual, Message Waiting *77-9*

Manual Signaling
Groups *76-1*
Pairs *76-1*
Manual Terminating Line Restriction
Voice Terminals *100-1*
Mark Function
Abbreviated Dialing *2-2*
Meet-Me Conference
Conference—Three Party *37-2*
Meet-Me Transfer
Transfer *116-2*
Memory Capacity of the 9-Track Tape
SMDR *107-9*
Memory Capacity with SMDR Direct Output
SMDR *107-15*
Memory Overload
SMDR *107-15*
Memory Table Space *A-1*
Message Center
Call Coverage *25-1*
Message Center Gateway
ACD *17-1*
EUCD *50-1*
LWC *70-6*
Message Waiting
Automatic *77-1*
Message Waiting — Automatic
2500 Series Voice Terminals *77-6*
515 BCT (Business Communications Terminal *77-6*
7100A Series Voice Terminals *77-6*
7200H Series Voice Terminals *77-6*
7300S Series Voice Terminals *77-6*
7400D Series Voice Terminals *77-6*
Indicators
Audible Message Waiting *77-1*
Message Waiting Lamp *77-1*
Operation *77-2*
PT (Personal Terminal) 510D *77-6*
Stutter Tone *77-1*
Z34A Message Waiting Indicator *77-6*
Message Waiting — Manual *77-9*
Message Waiting Lamp
Call Coverage *25-14*
LWC *70-3*
Message Waiting — Automatic *77-1*
Manual *77-9*
Messaging Cartridge
See Z300B Messaging Cartridge *48-17*
Messaging Services
Messaging Services—*Contd*
Display—Voice Terminal *48-1*
LWC *70-1*
Message Waiting Automatic *77-1*
Message Waiting — Manual *77-9*
Unified Messaging *124-1*
MIA (Most Idle Agent) Distribution
ACD *17-3*
Microwave Transmission
DS1 *44-2*
Miscellaneous Trunk Restriction
Restriction Groups *98-1*
Mnemonic Dialing
Data Call Setup *38-14*
Modem Pool
Trunk Identification *38-11*
Modem Pooling
ADFTC (Analog/Digital Facility Test Circuit) *78-7*
Attendant Extended Calls *78-2*
Characteristics *78-2*
Conversion Resource *78-1, 78-6*
Conversion Resource Testing *119-3*
Data Call Setup *38-10*
Data Preindication *78-3*
Intrapremises Calls *78-3*
Paired Trunk Groups *78-2*
Protocol Conversion *78-1, 78-6*
Route Advance *78-2*
Tie Trunks *78-4*
Transparency *78-1*
Trunk Identification *38-13, 38-29*
Modems
Data Call Setup *38-6*
DATAPHONE 300/1200 *39-3*
DCA *39-2, 39-11*
DCIU *G-11*
DS1 *44-5*
Modem Pooling *78-6*
Off-Premises Data-Only Extension *82-4*
MOS (Message Oriented Signaling)
ISDN/PRI *61-7*
MPDM (Modular Processor Data Module)
Host Computer Access *56-4, 56-8*
Host Computer Dialing *D-5*
MPDM/ACCUNET
ACCUNET Service Interface *3-4*
MTDM (Modular Trunk Data Module)
Host Computer Access *56-4, 56-8*
Host Computer Dialing *D-5*

MTDM (Modular Trunk Data Module)—*Contd*
Modem Pooling *78-6*
Off-Premise Data-Only Extension *82-4*
Multiappearance Preselection and Preference
Calling Appearance Preference *79-1*
Idle Appearance Preference *79-1*
Last Appearance Preference *79-1*
No Appearance Preference *79-1*
Prime Appearance Preference *79-1*
Ringing Appearance Preference *79-1*
Multiappearance Voice Terminals
Abbreviated and Delayed Ringing *101-4*
Intercom—Automatic *63-4*
Intercom—Dial *64-4*
Intercom—Manual *65-3*
Last Extension Dialed *68-3*
Line/Feature Status Indication *72-1*
Manual Signaling *76-2*
Message Waiting — Manual *77-10*
Multiappearance Preselection and Preference *79-5*
Personal Central Office Line *84-7*
Privacy
Manual Exclusion *90-3*
Ringing Cutoff *102-3*
Ringing Transfer *104-3*
Multidigit Steering
See Extension Number Steering
Multiple Call Handling
ACD *17-17*
Call Vectoring *31-25*
Multiple LDN (Listed Directory Numbers)
APLT *4-1*
Data Calls *38-27*
Multiple Listed Directory Numbers
CAS *80-5*
Data Calls *80-4*
Extension Number Steering *80-5*
ICI (Incoming Call Identification) *80-1*
Types of LDNs
DID *80-1*
Non-DID *80-1*
Multiplexing
Channel Division Multiplexer
DS1 *44-9, 44-16*
Channel Expansion Multiplexer
DS1 *44-8, 44-16, 44-17*
DMI *43-1*
Music Limit
Music-on-Hold *81-1*
Music-on-Hold
ACD *17-12*
EUCD *50-10*
Music Limit *81-1*
Music Source *81-1*
Muting
ACD *17-11*

N

Nailed Up Connections
See Dedicated Switch Connections *41-1*
Names Data Base
Display—Voice Terminal *48-14*
NCOSS (Network Control Operations Support System)
CMDR) *34-9*
SMDR *107-8*
Network Channels
DCIU *G-4*
DCS *49-4*
Network Location Codes (RNX)
See Extension Number Portability *51-5*
Networking *16-1AAR*
APLT *4-1*
ARS *21-1*
AUTOVON Access
Precedence Calling *87-1*
DCS *49-1*
Digital to Analog Network
DS1 *44-12*
Extension Number Portability *51-1*
FRL *52-1*
ISN Interface *60-1*
LAN *60-1*
Main/Satellite/Tributary *74-1*
Night Bell
See Unattended Console Service *122-1*
Night Service
Call Vectoring *31-4*
Unattended Console Service *121-1*
Node
DCS *49-1*
NPA (Numbering Plan Area)
ARS *21-2*
Numbering Plan
Tenant Services *109-13*

O

Off-Premises Data-Only Extension
Analog Service *82-1*
DATAPHONE Digital Service *82-1*
Digital Service *82-1*
DS1 Interface *82-1, 82-4*
DSU (Data Service Unit) *82-1*
Modems *82-4*
Protocol Conversion *82-1*
One Button Transfer
Modem Pooling *78-3*
See Data Call Setup *38-10*
Opcodes
VFCDR *126-14*
Open Systems Concept
See ISDN *61-6*
Optical Fiber Carrier
ISN *60-1*
Origination Restriction
Voice Terminals *100-1*
Outgoing Calls, Timed Recall *112-1*
Outgoing Trunk Queuing
See Queuing *91-1*
Output Formats
SMDR *107-11*
Outward Completion, Straightforward *108-1*
Outward Restriction
Voice Terminal *100-1*
OUTWATS
See WATS Access *128-1*
Overflow Chain
Tenant Services *109-7*
Overflow Level
ACD *17-10*
EUCD *50-8*
Overflow to the Public Network *16-3AAR*
Overload Balancing
ACD *17-9*
EUCD *50-7*
Override
Override, Manual or Clocked Manual
ARS *21-6*
Warning Tone *83-1*

P

Packet Controller
ISN *60-1*
Packet Service
Packet Service—*Contd*
ISDN/PRI *61-4*
Packet Switching
DCIU *G-6*
Paging
Loudspeaker *73-1*
Priority *73-1*
Radio Paging *92-1*
Paging Zones
Loudspeaker Paging Access *73-1*
Pattern Queuing *16-2AAR*
ARS *21-2*
Pause Function
Abbreviated Dialing *2-2*
PC 3B1
PC/PBX Connection *85-5*
PC 6300
PC/PBX Connection *85-5*
PC 6300 Plus
PC/PBX Connection *85-5*
PC 7300
PC/PBX Connection *85-5*
PCC Port
Word Length Options
15- and 18-word Default Formats *126-14*
Recommended Standard 18-Word ISDN Format *126-13*
Recommended Standard 24-word Format *126-14*
Variable Format *126-13*
PCC (Processor Communications Circuit)
VFCDR *126-3, 126-22*
PC/PBX Connection
7400 Series Voice Terminals *85-5*
7404D Digital Voice Terminal *85-3, 85-5, 85-7*
7405D Digital Voice Terminal *85-3*
Call Appearances *85-3*
Configurations *85-1*
Data Call Setup *38-4*
Digital Voice Terminals *85-5*
Display Voice Terminals *85-3*
Function Key Module *85-3*
IBM Compatible PCs *85-5*
Last Number Dialed *85-3*
Local Directory *85-3*
Messaging Cartridge Constraint *85-3*
Packages 1 and 2 *85-2*
Packages 3, 4, 5, and 6 *85-3*

PC/PBX Connection—*Contd*
PC 6300 *85-5*
PC 6300 Plus *85-5*
PC 7300 *85-5*
PC Expansion Card *85-7*
Retrofit to Earlier Versions *85-1*
Speakerphones *85-3*
UNIX System PC, 3B1 *85-5*
User's Guides *85-1*
Permanent Restrictions
See Restrictions—Voice Terminal Restrictions *100-1*
Permanent Seizure
Call Vectoring *31-13, 31-22*
Enhanced Trunking *F-11*
Personal Central Office Line
Limits *84-3*
Multiappearance Voice Terminals *84-1*
Single-Appearance Terminals *84-4*
SLS (Straight Line Set) *84-4*
Trunk Types *84-3*
Voice Features *84-3*
Personal Computer
Data Call Setup *38-4*
Personal Computers
Display—Voice Terminal *48-18*
PC/PBX Connection *85-1*
Personal List
Abbreviated Dialing *2-5*
Personal Terminal
Data Call Setup *38-4*
See 510D *48-5*
Phantom Calls
See Ghost Calls *17-8*
Polarity Guard
Remote Access *95-8*
Polling
CMDR
After Hours Polling *34-15*
Arrangements *34-13*
Device, 93B *34-9, 34-23*
Full Time Polling *34-14*
Time Calculations *34-15*
Port Status
DCIU *G-48*
DCS *49-12*
Portability Subnetwork
See Extension Number Portability *51-7*
Ports
DCIU *G-2*
Power Failure Transfer
Activating Conditions *86-1*
DID Denied *86-2*
Emergency Transfer Panel
574-5 *86-1*
609A *86-1*
Ground Start Button *86-1*
Removal of Restrictions and Features *86-2*
RMI (Remote Module Interface) *86-4*
System Recovery *86-4*
Power Supply, 207B
SMDR *107-23*
Precedence Calling
AUTOVON Access *87-1*
DCS *87-1*
DCS Configuration *87-7*
Defense Communications System *87-1*
Diversion *87-2, 87-4*
DTMF (Dual Tone Multi-Frequency) Signaling *87-2*
Gateway Service *87-1*
Hub Switch *87-1*
Network Access *87-1*
Precedence Capable Trunks *87-1*
Precedence Levels *87-2*
Precedence Signaling *87-2*
Preemption *87-1*
Preemption Warning Tone *87-3*
Star Network Configuration *87-1*
Trunk Types *87-7*
Precedence Capable Trunks
Precedence Calling *87-1*
Preemption
Precedence Calling *87-1*
Preindication
See Data Call Setup *38-10*
Preselected Call Routing
See Unattended Console Service *123-1*
Preselection and Preference, Multiappearance *79-1*
PRI (Primary Rate Interface)
See ISDN/PRI *61-1*
Priority Calling *88-1*
Priority Network Channels
DCS *49-26*
Priority Paging
Loudspeaker Paging *73-1*
Priority Queuing
ACD *17-3*
Call Vectoring *31-5*

Priority Queuing—*Contd*
EUCD *50-2*
Privacy
Attendant Lockout *89-1*
Bridged Call Appearance *23-5*
Data Protection *38-25, 40-1, 60-5*
Manual Exclusion *90-1*
Private Network Access *16-1AAR*
APLT *4-1*
DCS *49-1*
DS1 *44-1*
FRL *52-1*
Main/Satellite/Tributary *74-1*
Processor Data Module
See PDM and MPDM *56-8*
Programmable Intercept
See Intercept Treatment *62-1*
Protocol
BX.25
DCIU *G-6*
DCP
Modem Pooling *78-1*
Off-Premises Data-Only Extension *82-1*
DMA (Direct Memory Access)
DCIU *G-2*
DCS *49-4*
RS-232C *60-1*
DCIU *G-11*
Host Computer Access *56-2*
Modem Pooling *78-1, 78-6*
Off-Premises Data-Only Extension *82-1*
RS-366
ACCUNET Service Interface *3-4*
PT (Personal Terminal) 510D
Message Waiting — Automatic *77-6*
Public Network Access
ARS *21-1*
DID *46-1*
DOD *47-1*
DS1 *44-1*
FRL *52-1*
FX Access *54-1*
IXC Access *66-1*
WATS Access *128-1*
Pushbutton
See Touch-Tone
PVC (Permanent Virtual Circuits)
DCIU *G-5*
DCS *49-4*

Q

Queue Position Feedback
Data Call Setup *38-11*
Queue-of-Origin Announcement
ACD *17-12*
EUCD *50-11*
Queue-of-Origin Display
ACD *17-14*
EUCD *50-11*
Queue-Status Display
ACD *17-16*
Call Vectoring *31-25*
Queuing
ARS *21-2*
Blocking *91-7*
Flow Diagram *91-4*
Nonpriority *91-2*
Off-Hook *91-1*
Priority *11-1, 91-2*
Remote Access *95-4*
Ringback *91-1*
Time-in-Queue-Limit *91-1*
Types Available *91-2*

R

Radio Paging Access *92-1*
Limits *92-5*
Recall, Attendant *12-1*
Recall Button
Recall Signaling *93-1*
Recall Signaling *93-1*
Record Formats
SMDR *107-3*
Recordable Data Items
VFCDR *126-4*
Recorded Announcement
ACD *17-11*
Call Vectoring *31-9*
DDC *45-2*
EUCD *50-9*
Recorded Announcement Limit
ACD *17-41*
Call Vectoring *31-20*
Intercept Treatment *62-3*
See Intercept Treatment *62-1*
UCD *125-2*
Recorded Telephone Dictation Access *94-1*
Records of CAS Attendant Extended Calls

Records of CAS Attendant Extended Calls—*Contd*
CMDR *34-19*
SMDR *107-14*
Records of Ineffective Attempts
CMDR *34-16*
SMDR *107-16*
Records on 9-Track Tape
See SMDR *107-9*
Referral Call
ACA *19-1*
Release Link Trunks
CAS *33-1*
Release Loop Operation
See Attendant Release Loop Operation *13-1*
Reminder, Timed *113-1*
Remote Access
AIOD Billing *20-1*
Authorization Codes *95-2, 95-4*
Automatic Callback *95-4*
Barrier Codes *95-2, 95-3*
Changing *95-3*
Basic Options *95-1*
Dialing Requirement *95-4*
Modem Pooling *78-3*
Queuing *95-4*
Rotary Dialing Terminals *95-1*
Security Measures *95-2, 95-3*
Shared LDN Service *95-1, 95-3*
Switchhook Flashing *95-4*
Time-Out to Attendant *95-1*
Remote Groups
DS1 *44-1*
Remote Module
Power Failure Transfer *86-4*
Reorder Tone
See Intercept Treatment *62-1*
Repeated Delay Announcement
Call Vectoring *31-15*
DDC *45-2*
UCD *125-2*
Repertory Dialing
See Abbreviated Dialing
Report
SMDR *107-13*
Reserved Port Status
DCIU *G-48*
DCS *49-12*
Restrictions *96-1Attendant Control of Voice Terminals*
Restrictions—*Contd*
ACTGA (Attendant Control of Trunk Group Access) *7-1*
Code Restriction *97-1*
Miscellaneous Trunk Restriction *98-1*
Toll *99-1*
Voice Terminal *100-1*
Return Call
See Timed Reminder *113-1*
Return-to-Voice
ISN *60-3*
See Data Call Setup *38-10*
Reviewing Assigned Authorization Codes
Authorization Codes *15-4*
Ring Ping
Call Forwarding—Follow Me *28-1*
Ringing Abbreviated and Delayed
Automatic Transfer *101-1*
Manual Transfer *101-1*
Ringing Cutoff *102-1*
Ringing Cycle
Timing *103-1*
Ringing Distinctive
See Distinctive Ringing
Ringing Transfer *104-1*
Ring-Ping
Call Coverage *25-7*
RMATS (Remote Maintenance, Administration, and Traffic System)-II
Administration Facilities *C-2*
RNX Network Location Codes
See Extension Number Portability *51-5*
Route Advance
Compatibility *105-1*
Lists *105-1*
Modem Pooling *78-2*
Route-To Retry Counter
Call Vectoring *31-22*
Routing Methods
ACD (Automatic Call Distribution) *17-4*
Call Vectoring *31-6*
EUCD (Enhanced Uniform Call Distribution) *50-3*
Routing on Failure, DCIU Messages
DCIU *G-9*
DCS *49-7*
Routing Patterns *16-1AAR*
Routing Tables
See Call Vectoring

Routing to Private Networks in Foreign Countries *16-4AAR*
RS232C Cable
PC/PBX Connection *85-6*
RS-232C Protocol
DCIU *G-11*
Host Computer Access *56-2*
ISN *60-1*
Modem Pooling *78-1*
RS-232C Trunk Ports
ISN *60-9*
RS-366 Protocol
ACCUNET Service Interface *3-4*
RS-449 Protocol
DCIU *G-11*

S

SAC GROUP
Call Coverage *25-6*
Satellite Hop Control *16-4See AAR Conditional Routing*
Satellite Partition
Tenant Services *109-18*
SCI (Switch Communication Interface)
DCIU *G-2*
Scrolling
Display—Voice Terminal *48-13*
SCS (System Clock Synchronizer)
DS1 *44-16*
Security Measures
Authorization Codes *15-1*
Display—Voice Terminal *48-15*
LWC *70-3*
Remote Access *95-2, 95-3*
Unauthorized Call Control
ARS *21-6*
Seed Digit
Authorization Codes *15-2*
Send All Calls
Call Coverage *25-5, 25-6*
Serial Calls
Administrable Recall Button *106-2*
Attendant Recall *106-1*
Automatic Reconnect to Attendant *106-1*
Two-Party Hold on Console *106-2*
Service Observing
ACD *17-11*
Shared Appearances *E-1*
Shared Appearances—*Contd*
Bridged Call *23-1*
Call Coverage *25-5, 25-6*
Signaling
10-bit start/stop *60-1*
Data Call Setup *38-10*
Host Computer Access *56-2*
24th Channel *61-7*
DMI *43-1*
DS1 *44-5*
Data Communications Formats *D-1*
D-Channel *61-7*
Signaling Link
DCIU *G-3*
DCS *49-2*
Manual *76-1*
MOS (Message Oriented Signaling) *61-7, F-2*
Precedence Calling DTMF (Dual Tone Multi-Frequency) *87-2*
Recall *93-1*
Timed Reminder *113-1*
VBR (Variable Bit-Robbed) Voice Channel Expansion
DS1 *44-8*
Silent Observing
ACD *17-11*
Single-Appearance Voice Terminals
Abbreviated and Delayed Ringing *101-4*
ACD *17-46*
EUCD *50-32*
Ringing Transfer *104-3*
Six Party Conference
See Conference—Attendant Six Party *36-1*
SMDR (Station Message Detail Recording) *107-1*
15-Word Format *107-11*
9-Track Tape *107-7*
9-Track Tape Specifications *107-9*
Account Code Formats *107-3*
Activating *107-13*
ASCII Character Code *107-14*
Associated Processors
TELESEER SMDR *107-10*
Associated Storage Units
9-Track Tape *107-9*
SMDR Adjunct *107-9*
Cabinet Separation *107-14*
CAS *107-14*
CDR Ports *34-7*

SMDR (Station Message Detail Recording)—*Contd*
CDR record (Call Detail Recording record) *107-3*
Condition Codes *107-6*
Data Base *107-3*
Deactivating *107-14*
Direct Output *107-7*
Extension Number Steering *107-15*
FEAC *107-14*
LSU (Local Storage Unit *107-8*
Memory
9-Track Tape *107-9*
Direct Output *107-15*
Power Failure Protection *107-15*
Record Format *107-3*
Report Example *107-13*
Variable Call Completion Threshold *107-16*
Word Structure *107-4*
SMT (System Management Terminal)
Administration Facilities *C-1*
SN224, Controller
ACD *17-60*
EUCD *50-41*
SN228B, Automatic Message Waiting Interface Circuit Pack
LWC *70-16*
SN229, Automatic Message Waiting Interface Circuit Pack
LWC *70-16*
Unattended Console Service—Call Answer From Any Voice Terminal *122-5*
SN230, Trunk Circuit Pack
DOD *47-4*
FX Access *54-4*
Multiple LDN *80-6*
Personal Central Office Line *84-7*
Radio Paging Access *92-6*
Remote Access *95-8*
WATS Access *128-3*
SN231, Auxiliary Trunk Circuit Pack
Call Park *29-5*
DDC *45-7*
EUCD *50-41*
Intercept Treatment *17-60, 62-6*
Loudspeaker Paging Access *73-12*
Malicious Call Trace *75-16*
Music-on-Hold Access *81-4*
Queuing *91-12*
Recorded Telephone Dictation Access *94-4*
SN231, Auxiliary Trunk Circuit Pack—*Contd*
UCD *125-8*
SN232, DID Trunk Circuit Pack
DID *46-4*
Multiple LDN *80-6*
SN233, Release Link Trunk Circuit Pack
APLT *4-6*
CAS *33-10*
Precedence Calling *87-10*
SN238, EIA Trunk Circuit Board
Host Computer Access *56-8*
Host Computer Dialing *D-6*
ISN *60-9*
SN241, Contact Interface Circuit Pack
ACD *17-60*
CAS *33-10*
DDC *45-7*
EUCD *50-41*
UCD *125-8*
SN243, Data Port Circuit Pack
DCA *39-11*
SN244, ANI Circuit Pack
AIOD *20-3*
SN251, Touch-Tone Dialing Receiver/Register
SN251, Touch-tone Dialing Receiver/Register
ARS *21-16*
Precedence Calling *87-10*
Touch-Tone Calling Senderized Operation *114-2*
Touch-Tone Dialing *115-2*
SN252, Touch-Tone Calling Sender Circuit Pack
SN252, Touch-tone Calling Sender Circuit Pack *16-13AAR*
ARS *21-16*
Precedence Calling *87-10*
Touch-Tone Calling Senderized Operation *114-2*
SN253, Auxiliary Tone Plant
CAS *33-10*
Code Calling Access *35-4*
Radio Paging Access *92-6*
Recorded Telephone Dictation Access *94-4*
SN254 Conference Circuit Pack
Conference—Attendant Six Party *36-6*
SN270, General Purpose Port Circuit Pack
Host Computer Access *56-8*
Modem Pooling *78-7*
Soft Hold
See Hold

Soft Numbers
Call Coverage *25-13*
Call Vectoring *31-1*
Special Access
ACCUNET Service Service *3-1*
Legal Considerations *61-14*
Special Functions
Abbreviated Dialing *2-2*
Specifications for 9-Track Tape
SMDR *107-9*
Speed Calling
See Abbreviated Dialing
Split
ACD *17-1*
EUCD *50-1*
Split Supervisor
ACD *17-8*
EUCD *50-5*
Splitting, Attendant Auto-Manual *5-1*
Star Network Configuration
Precedence Calling *87-1*
Station
Station Busy Indications
See Terminal Busy Indications *110-1*
Station Hunting
See Hunting *59-1*
See Voice Terminal
Status Indication, Line/Feature *72-1*
Steering
See Extension Number Steering
Stop Function
Abbreviated Dialing *2-3*
Straight Line Sets
Abbreviated and Delayed Ringing *101-4*
Bridged Call *23-2*
Call Coverage *25-14*
Ringing Transfer *104-3*
Terminal Busy Indication *110-1*
Straightforward Outward Completion *108-1*
Stroke Count
ACD (Automatic Call Distribution) *17-21*
Stutter Tone
Message Waiting — Automatic *77-1*
Subnetwork Trunking *16-3AAR*
ARS *21-6*
IXC (Interexchange Carrier) Access *66-1*
Successful Call Transfers Out of AUDIX *14-5*
Suppress Function
Abbreviated Dialing *2-3*
Suppressed Signaling DS1 Trunks
Suppressed Signaling DS1 Trunks—*Contd*
Dedicated Switch Connections *41-2*
Switch Reload And Reportable Trunk Group Records
VFCDR *126-12*
Switchhook Flash
See Hold
Timing *55-2*
Synergism between System 85 and ISN *60-2*
System 85 Synchronization System
DS1 *44-6*
System Configuration Limits *A-1*
System List
Abbreviated Dialing *2-5*
System Supervisor
ACD *17-9*
EUCD *50-6*

T

T1 Carrier
DMI *43-1*
DS1 *44-2*
Tandem Tie Trunk Switching
Administration *119-8*
Tap Button
See Recall Signaling *93-1*
TCM (Terminal Change Management)
Administration Facilities *C-2*
TCM (Traveling Class Mark) *16-4AAR*
FRL *52-2*
Telephone
See Voice Terminal
TELETYPE, Model 4310 AAC Teleprinter
SMDR *107-23*
TELTONE M106-05 Remote Access Unit
Trunk Verification—Voice Terminal *119-11*
Temporary Bridged Appearance
Call Coverage *25-7*
Temporary Restrictions *96-1See Restrictions—Attendant Control of Voice Terminals*
Tenant Services
ARS Routing *109-7*
Attendant Overflow *109-6*
Attendant Queue *109-3*
Calling Privileges
Attendant *109-2*
Voice Terminal *109-2*

Tenant Services—*Contd*
Classes of Service *109-13*
Controlling Attendant Console *109-5*
Cost Advantages *109-1*
Coverage to Shared Attendant Queue *109-14*
Extension Number Steering *109-12*
Legal Considerations *109-11*
Numbering Plan *109-13*
Overflow Chain *109-7*
Recent-Disconnect Announcements *109-14*
Satellite Partition *109-18*
See also IPA (Interpartition Access) *109-1*
Trunk-to-Trunk Partitioning *109-12*
Unattended Console Service *109-5*
Terminal Busy Indications *110-1*
Terminal Dialing
See Data Call Setup, Keyboard Dialing *38-10*
Terminal Restrictions, Voice *100-1*
Terminal-to-Terminal Only Calling Restriction
Voice Terminals *100-2*
Termination Restriction
Voice Terminal *100-2*
Three Party Conference
See Conference—Three Party
Threshold Limits
ACA *19-1*
Through Dialing *111-1*
Tie Trunks *16-9AAR*
Digital
DS1 *44-3, 44-11, 44-12*
Modem Pooling *78-4*
Timed Recall on Outgoing Calls
Levels *112-2*
Warning Tone *112-1*
Timed Reminder
Attendant Release Loop Operation *13-1*
CAS *113-6*
On Serial Calls *113-4*
Signaling *113-1*
Timers and Counters
Call Vectoring *31-22*
Timing
Ringing Cycle *103-1*
Switchhook Flash *55-2*
TN380C Module Processor
DS1 *44-16*
TN380D Module Processor
ISDN/PRI *61-23*
TN403, Data Channel Circuit Pack
CMDR *34-23*
FADS *53-4*
SMDR *107-23*
TN463 SCS
ACCUNET Service Interface *3-4*
TN463 System Clock Synchronizer Circuit
DS1 *44-16*
ISDN/PRI *61-23*
TN474B PCC Circuit Pack
VFCDR *126-22*
TN492, Real-time Clock Circuit
ARS *21-16*
Toll Restriction *99-1*
ARS Toll Restriction *21-5*
Free Call List *99-1*
Types *99-1*
Tone Detector Circuit
Data Call Setup *38-31*
Modem Pooling *78-7*
Touch-Tone Calling Senderized Operation *114-1*
Touch-Tone Dialing *115-1*
Transfer
Data Call Setup *38-9*
Main/Satellite/Tributary *74-2*
Meet-Me Transfer *116-2*
Multiappearance Voice Terminals *116-3*
Transfer, Ringing *104-1*
Trunk-to-Trunk Transfer *116-3*
With RECALL Button *116-2*
With TRANSFER Button *116-2*
Without Buttons *116-1*
Translations
Administration Facilities *C-1*
Transmission Measurement
See ATMS
Transparency
DCS *49-2*
Traveling Class Mark *16-4See TCM in AAR*
Tributary Locations
See Main/Satellite/Tributary
Trunk Answer From Any Station
See Unattended Console Service *122-1*
Trunk Circuit Pack, SN230 *54-4, 95-8, 128-3*
Trunk Data Module
See TDM and MTDM *56-8*
Trunk Group
Attendant Control of Access to *7-1*
Attendant Direct Selection *9-1*

Trunk Groups
Busy/Warning Indicators to Attendant *117-1*
Miscellaneous Restrictions *98-1*
Route Advance *105-1*
Trunk Identification Display to Attendant *10-2*
Trunk Queuing
See Queuing *91-1*
Trunk Restriction, Miscellaneous *98-1*
Trunk Vectoring
See Call Vectoring
Trunk Verification
Attendant
Maintenance Busy *118-6*
Warning Tone *118-1*
Voice Terminal
Conversion Resource Testing *119-3*
Maintenance Busy *119-4*
Tandem Tie Trunk Switching *119-8*
TELTONE M106-05 Remote Access Unit *119-11*
Trunk Test Table *118-6, 119-7*
Warning Tone *119-1*
Trunk-to-Trunk Connections
Incoming-to-Outgoing Trunk Connection *120-1*
Outgoing-to-Outgoing Trunk Connection *120-1*
Trunk-to-Trunk Partitioning
Tenant Services *109-12*
Trunk-to-Trunk Transfer
Transfer *116-3*
Two Stage Dialing
Data Call Setup *38-26*

U

UCD (Uniform Call Distribution)
Associated Extension Number *125-2*
Busy-out Function *125-2*
FADS *125-3, 125-4*
Group *125-1*
Hunting *125-2*
LDN *125-1*
Limits *125-4*
Message Center *125-4*
Recorded Announcement *125-2, 125-4*
Terminals *125-2*
Unattended Console Service
Unattended Console Service—*Contd*
Alternate Console Position *121-1*
Call Answer From Any Voice Terminal
Alerting *122-1*
Preselected Call Routing *122-3*
Flow Diagram *121-3*
Preselected Call Routing
3-Burst Ringing *123-1*
Routing Options *123-1*
Tenant Services *109-5*
Unauthorized Call Control
ARS *21-6*
Unified Messaging
AUDIX *124-2*
Available Messaging Principles *124-2*
Call Coverage *124-2*
Electronic Mail
EDC *124-2*
UNIX System Mail *124-2*
LWC *124-3*
MCS (Message Center Service) *124-3*
Messaging Principles
Integrated Alerting and Notification *124-1*
Integrated Preparation *124-1*
Universal Connectivity *124-1*
Universal Mailbox *124-1*
Universal Retrieval *124-1*
Uniform Call Distribution
See UCD *125-1*
Uniform Numbering *16-3AAR*
CAS *33-5*
DCS *49-20*
Universal Connectivity
See Unified Messaging *124-1*
Universal Mailbox
See Unified Messaging *124-1*
Universal Retrieval
See Unified Messaging *124-1*
UNIX System PCs
PC/PBX Connection *85-5*
Unsuccessful Call Records
CMDR *34-16*
SMDR *107-16*

V

Variable Call Completion Threshold
CMDR *34-17*

VBR (Variable Bit-Robbed) Signaling Voice Channel Expansion
DS1 *44-8*
VDN (Vector Directory Number)
Call Vectoring *31-1*
Vector Commands
Call Vectoring *31-7*
Verification of Lines *24-1*
Verification of Trunks
By Attendant *118-1*
By Voice Terminal *119-1*
VFCDR (Variable Format Call Detail Recording)
3B2 CDRU Record Output *126-26*
Account Codes *126-15*
Administrable Data Items *126-16*
CDR (Call Detail Recording) Record Generator *126-1*
CDR Record Formats And Their Structures *126-12*
CMDR *126-28*
Condition Codes *126-6*
Data Presentations From The PCC
18-Word Formatted ASCII Direct Output *126-22*
BTC Protocol *126-22*
Direct Output Unformatted *126-23*
Direct Output *126-26*
Encodes *126-14*
FEAC (Forced Entry of Account Codes) *126-4, 126-12*
ISDN/PRI *126-11*
Opcodes *126-14*
PCC Circuit Pack *126-22*
PCC Port *126-3, 126-22*
Switch Reload And Reportable Trunk Group Records *126-12*
Tenant Services *126-12*
VFCDR Devices *126-28*
VFCDR Storage Unit *126-25*
Word Structure *126-14*
Virtual Circuit
DCIU
Network Channels *G-4*
Virtual Circuits
DCIU *G-1*
Visual Alerting *E-5*
Visually Impaired Attendant Service
Devices *127-1*
Distinctive Audible Signals *127-1*
Visually Impaired Attendant Service—*Contd*
ICI (Incoming Call Identification) *127-1*
VMAAP (Visual Maintenance and Administration Panel)
Administration Facilities *C-1*
Voice Channel Expansion
DS1 *44-8*
Voice Data Station
See 7404D VDS
Voice Mail and Voice Mailbox
See AUDIX *14-1*
Voice Store and Forward
See AUDIX *14-1*
Voice Switched Gain Amplifier *95-8*
Voice Terminal
Voice Terminal, 40-Character Display *48-1*
Voice Terminal Restrictions
Class-of-Service Restrictions *100-1*
Inward *100-1*
Manual Terminating Line *100-1*
Origination *100-1*
Outward *100-1*
Terminal-to-Terminal Only Calling *100-2*
Termination *100-2*
Types *100-1*
See 2500 Series, 7100 Series, 7200 Series, etc.
Voice Terminal, Verification of Trunk *119-1*
Voice Terminals
Power Failure Transfer *86-6*

W

Wait for Dial Tone Function
Abbreviated Dialing *2-3*
Wait Function
Abbreviated Dialing *2-2*
Warning Tone *16-4AAR*
ACD *17-11*
ARS *21-5*
Busy Verification of Lines *24-1, 24-3*
EUCD *50-9*
Override *83-1*
Preemption *87-3*
Timed Recall on Outgoing Calls *112-1*
Trunk Verification—Attendant *118-1*
Trunk Verification—Voice Terminal *119-1*
WATS (Wide Area Telecommunications Service) Access

WATS (Wide Area Telecommunications Service) Access—*Contd*
800 Service *128-1*
AAR/ARS *128-2*
Attendant Handling *128-2*
DOD (Direct Outward Dialing) *128-1*
Word Structure
CMDR *34-3*
SMDR *107-4*

Z

Z300B Messaging Cartridge
Call Coverage *25-25*
Display—Voice Terminal *48-5, 48-12, 48-17*
Z34A Message Waiting Indicator
Message Waiting — Automatic *77-1, 77-6*
Z3A3, ADU (Asynchronous Data Unit)
Host Computer Dialing *D-6*
Z3A3 ADU Interface Unit
ISN *60-9*
Zip Tone
ACD *17-12*
EUCD *50-10*
Zones, Paging *73-1*