555-230-105
Issue 4
September, 1995

DEFINITY Communications System
Generic 3r Maintenance

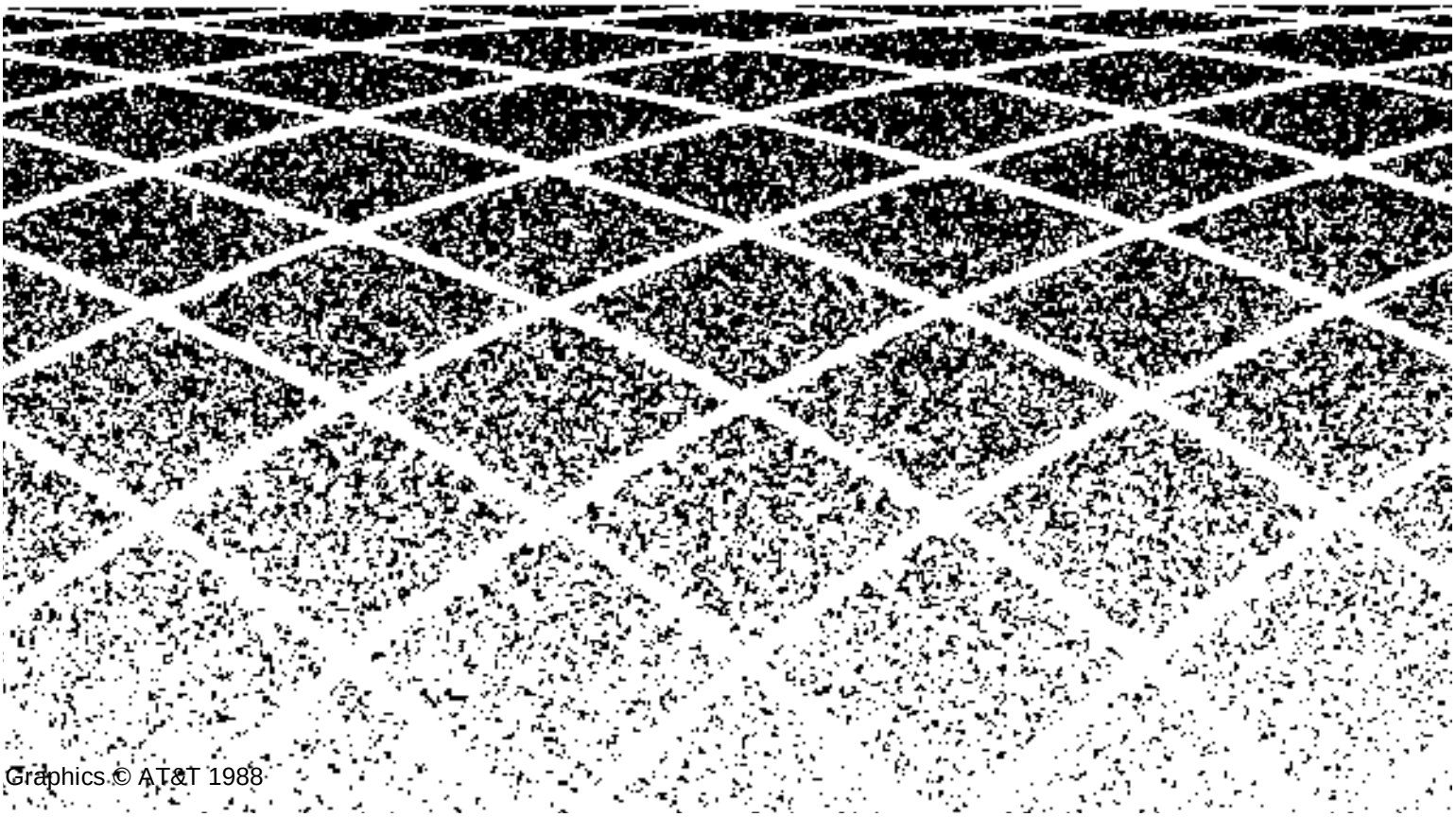

Graphics © AT&T 1988

Blank Page

Contents

Table of Contents i

About This Document lxi

- Safety Precautions lxi
- Intended Use lxi
- How to Use this Document lxii
- Organization lxii
- References lxiii

1 Maintenance Architecture 1-1

- Maintenance Objects 1-1
- Alarm and Error Reporting 1-2
  - Alarm and Error Logs 1-3
  - INADS Alarm Reporting 1-4
- Port Network Connectivity (PNC) 1-4
  - PNC Configurations 1-5
- SPE Duplication 1-8
  - Standby SPE Availability 1-9
  - Standby SPE State of Health 1-11
  - Standby SPE Maintenance Architecture 1-11
  - Standby Maintenance Monitor Software 1-13
  - Handshake Communication 1-13
  - Maintenance of Standby Components 1-14
  - Locking the Active SPE 1-16
  - Memory Shadowing 1-17
  - Initialization: Bringing the Standby SPE Up 1-17
- Power Interruptions 1-18
  - Nominal Power Holdover 1-19
  - Effects of Power Interruptions 1-19
    - PPN Cabinet with Power Holdover 1-19

Contents

EPN Cabinet with Power Holdover 1-20
External Alarm Leads 1-20

2 Hardware Configurations 2-1

- Multicarrier Cabinet 2-1
  - Processor Port Network Cabinet 2-2
  - Multicarrier Expansion Port Network Cabinets 2-3
- Single-Carrier EPN Cabinet 2-3
- Carriers in Multicarrier Cabinets 2-5
  - PPN Control Carrier (J58890AP) 2-5
    - PPN Control Carrier (J58890AP) — Rear View 2-7
  - Port Carrier (J58890BB) 2-9
    - Port Carrier — Rear View 2-11
  - Expansion Control Carrier (J58890AF) 2-12
    - Expansion Control Carrier — Rear View 2-13
  - Switch Node Carrier (J58890SA) 2-15
    - Switch Node Carrier — Rear View 2-18
- Carriers in Single-Carrier Cabinets 2-21
  - Expansion Control Cabinet (J58890N) 2-21
    - Expansion Control Cabinet — Rear View 2-23
    - Port Cabinet (J58890H) 2-24
    - Port Cabinet — Rear View 2-25
- PNC Cabling — Fiber Hardware 2-26
  - EI-to-EI or EI-to-SNI Intercabinet Fiber Optic Cables 2-26
  - EI-to-SNI or EI-to-EI Intracabinet Metallic Cabling 2-28
  - DS1C Cabling 2-28
- Generic 3r Circuit Packs 2-31
- Duplication: Reliability Options 2-40
  - Standard Reliability Option 2-40
  - High Reliability Option 2-40
  - Critical Reliability Option 2-41

Contents

3 Generic 3 Management Terminal 3-11

- Terminals Supported 3-11
- Multiple Access 3-12
- G3V3/G3V4 Commands 3-13
- Switch-Based Bulletin Board 3-14
  - Description 3-14
  - Accessing the Bulletin Board 3-14
  - User Considerations 3-15
  - System Considerations 3-15
  - System Bulletin Board Commands 3-15
    - Editing a Switch-Based Bulletin Board Message 3-15
- Switch Based Bulletin Board Message Notification 3-17
  - To Log In 3-17
  - Forced Password Aging and Administrable Logins for G3V3 and Later Releases 3-17
    - To Log In 3-19
    - To Logoff 3-19
    - To Display a Login 3-110
    - To List Logins 3-111
    - To Remove a Login 3-111
    - To Test a Login 3-111
  - Administering Customer Logins and Forced Password Aging for G3V3 and Later Releases 3-112
    - Adding Customer Logins and Assigning Initial Password 3-112
    - Changing a Login's Attributes 3-114
    - Administering Login Command Permissions 3-115
- Connecting the G3-MT 3-131
- Setting up the 715 BCS Terminal 3-132
  - Serial Printer Connection 3-133
    - Parallel Printer Connection 3-133
- System Login Procedure 3-133
- Logging On 3-135
- Logging Off 3-136
- Command Line Details 3-137

Contents

- G3-MT Keyboard Definitions 3-137

4 Initialization and Recovery 4-1

- Hot Restart 4-2
- Reset Level 1 (Warm Restart) 4-3
- Reset Level 2 (Cold-2 Restart) 4-3
- Reset Level 3 (Cold-1 Restart) 4-4
- Reset Level 4 (Reboot) 4-5
- Reset Level 5 (Extended Reboot) 4-6
- Initialization Diagnostics 4-6
- SPE-Down Command Interface 4-8
  - SPE-Down Mode 4-8
  - SPE Locked Standby or Standby SPE-Down 4-9
  - Bringing Up the SPE-Down Interface 4-9
    - SPE Locked Standby or Standby SPE-Down 4-10
  - Using the SPE-Down Interface 4-11
    - Test Commands 4-12
    - Display Alarms Command 4-13
    - Reboot Commands 4-14
  - Bringing the SPE Back into Service 4-15
    - Simplex SPE 4-15
    - Duplicated SPE 4-15

5 Responding to Alarms and Errors 5-1

- Safety Precautions 5-1
- Electrostatic Discharge 5-2
- Suppressing INADS Alarm Reporting 5-4
- Reseating and Replacing Circuit Packs 5-5
  - Special Procedures 5-6
    - To Replace a Circuit Pack: 5-6
- Replacing SPE Circuit Packs 5-8
  - Simplex SPE 5-8

Contents

Replacing Circuit Packs on a Duplicated SPE: Lock-and-Power-Down 5-8

- Troubleshooting a Duplicated SPE 5-11

Determining the Time of a Spontaneous Interchange 5-12

Examining the Alarm and Error Logs 5-13

Auxiliary Data for SYSTEM Errors 6002, 6003, 6102, and 6103 5-14

Testing the Standby SPE 5-15

- Executing a Planned SPE Interchange 5-16

Prerequisites 5-16

SPE Interchange Failures 5-16

Notes for SYSTEM Error 605 AUX Data: 5-18

- Fiber Fault Isolation Procedure 5-19

Steps: 5-19

SNI/EI Manual Loop Back Procedure 5-21

Loopback Tests Run for Fiber Fault Isolation Procedure 5-22

- Troubleshooting ISDN-PRI Problems 5-24
- Troubleshooting ISDN-PRI Endpoints (Wideband) 5-27
- Troubleshooting ISDN-BRI/ASAI Problems 5-29
- Troubleshooting ISDN-PRI Test Call Problems 5-33

Synchronous Method 5-33

Asynchronous Method 5-34

- Troubleshooting the Outgoing ISDN-Testcall Command 5-35
- Packet Bus Fault Isolation and Repair 5-36

Remote Maintenance versus On-Site Maintenance 5-37

Tools for Packet Bus Fault Isolation and Correction 5-37

What is the Packet Bus? 5-38

Packet Bus Faults 5-39

Packet Bus Connectivity 5-39

Circuit Packs That Use the Packet Bus 5-40

Effects of Circuit Pack Failures on the Packet Bus 5-42

Maintenance of the Packet Bus 5-44

Contents

Packet Bus and TDM Bus: a Comparison 5-44

Packet Bus Maintenance Software 5-45
Fault Correction Procedures: Overview 5-46
The Maintenance/Test Circuit Pack (TN771) 5-46

TN771 Packet Functions 5-47

TN771 in Standalone Mode 5-47

Required Hardware 5-48
Slot Selection for Standalone Mode 5-49
Entering and Exiting Standalone Mode 5-49
Using Standalone Mode in Packet Bus Fault Isolation and Correction 5-51

Special Precaution Concerning the TN771 5-55

Packet Bus Fault Isolation Flowchart 5-55

FlowChart Notes 5-58

Correcting Packet Bus Faults 5-60

The Status Port-Network Command 5-60

Considerations for Duplicated Systems 5-61

Troubleshooting Procedures 5-61

Procedure 1 5-62
Procedure 2 5-63
Procedure 3 5-65

Procedure 4 5-66

Part 1: 5-68

Processor Port Network: 5-68

Expansion Port Networks: 5-68

6 Additional Maintenance Procedures 6-1

- Software Updates 6-1

Software Version Number 6-1

Service Effects of a Software Update 6-2

Simplex SPE 6-2
Duplicated SPE 6-3

Call-Preserving Update 6-3

Call-Dropping Update 6-3

Preparing for a Software Update 6-3

Contents

Restoring the System after an Update 6-5
Backing Out of a Software Update 6-5
Software Update Procedure — Simplex SPE 6-5
Software Update Procedure — Duplicated SPE 6-8
■ Facility Test Calls 6-10
Trunk Test Call 6-10
DSO Loop-Around Test Call 6-11
DTMR Test Call 6-12
TDM Bus Time Slot Test Call 6-12
TDM Bus Time Slots 6-13
Out-of-Service Time Slot Test Call 6-15
System Tone Test Call 6-15
■ Preventive Maintenance 6-18
Air Filters 6-18
Tape Drive 6-19
Batteries 6-19
■ Analog Tie Trunk Back-to-Back Testing 6-21
E&M Mode Test Procedure 6-21
Simplex Mode Test Procedure 6-27
■ Terminating Trunk Transmission Testing 6-28
■ Removing and Restoring Power 6-28
■ Automatic Transmission Measurement System (ATMS) 6-30
ATMS Requirements 6-30
Running ATMS Tests (Test Analog-Testcall Command) 6-31
Input Parameters 6-32
Test Call Results 6-33
Output Fields 6-35
ATMS Reports (List Testcall Command) 6-35
Input Parameters - List Testcall Command 6-37
ATMS Summary Reports 6-37
Output Fields - ATMS Summary Report 6-39
ATMS Detail Report 6-39
Output Fields - ATMS Detail Report 6-40

Contents

ATMS Measurement Analysis 6-42

7 LED Indicators 7-1

- Terminal Alarm Notification 7-1
- Attendant Console LEDs 7-2
- Circuit Pack LEDs 7-3
  - LED Alarms without Alarm Log Entry or with Error Type 1 7-4
- Expansion Interface Circuit Pack LEDs 7-5
- Maintenance Circuit Pack LEDs 7-6
- Duplication Interface Circuit Pack LEDs 7-8
- Switch Node Interface LEDs 7-9
- DS1C Circuit Pack LEDs 7-10
  - DS1 Facility LEDs 7-11
- Tone-Clock Circuit Pack LEDs 7-13
- Maintenance/Test Circuit Pack LEDs 7-14
- LEDs on Standby Components 7-15

8 Maintenance Commands 8-1

- Command Line Syntax 8-2
- Common Input Parameters 8-2
- Common Output Fields 8-5
- Contention between Simultaneous Commands 8-9
- Busyout and Release Commands 8-10
- Common Abort and Fail Codes 8-11
- Alarm and Error Categories 8-16
- Backup Disk 8-45
  - Parameters 8-45
  - Examples 8-45
  - Output 8-46

Contents

- Busyout Access-Endpoint 8-46
  - Output 8-47
- Busyout Board 8-47
  - Examples 8-48
- Busyout CDR-Link 8-48
  - Parameters 8-48
  - Examples 8-48
- Busyout Data-Module 8-48
- Busyout Disk 8-49
- Busyout DS1-Facility 8-49
  - Parameters 8-51
  - Output 8-51
- Busyout Fiber-Link 8-51
  - Parameters 8-52
  - Examples 8-52
- Busyout Host-Adapter 8-52
  - Parameters 8-53
  - Examples 8-53
- Busyout Journal-Printer 8-53
  - Parameters 8-53
  - Examples 8-53
- Busyout Link 8-54
  - Parameters 8-54
- Busyout MIS 8-54
- Busyout Modem-Pool 8-55
  - Parameters 8-55
  - Examples 8-55
- Busyout PMS-Link 8-55
- Busyout PNC-Standby 8-56
  - Output 8-57
- Busyout Port 8-57
  - Examples 8-57
- Busyout PRI-Endpoint 8-57
  - Output 8-58
- Busyout SPE-Standby 8-58

Contents

- Busyout SP-Link 8-59
- Busyout Station 8-59
- Busyout Tape 8-60
  - Parameters 8-60
  - Examples 8-60
- Busyout TDM 8-60
  - Parameters 8-61
  - Example 8-61
- Busyout Tone-Clock 8-61
  - Parameters 8-61
- Busyout Trunk 8-62
  - Examples 8-62
- Cancel Hardware-Group 8-62
  - Scheduled and Periodic Maintenance 8-62
    - Status Hardware-Group 8-63
    - All Ports Option 8-63
    - Output 8-63
- Change Circuit-Packs 8-63
  - Parameters 8-64
  - Output 8-64
- Change Fiber-Link 8-66
  - Parameters 8-67
    - Examples 8-67
    - Output 8-68
- Change Synchronization 8-72
  - Output 8-73
    - Stratum 4 Fields 8-73
    - Stratum 3 Fields 8-73
- Change System-Parameters Maintenance 8-74
    - EXAMPLES 8-75
    - Output 8-75
    - Operations Support Parameters 8-76
    - Scheduled Maintenance 8-77
- Clear Errors 8-83
- Clear Firmware-Counters 8-83
  - Parameters 8-84
- Clear ISDN-Testcall 8-84

Contents

- Clear Link 8-84
  - Parameters 8-85
- Clear PGATE-Port 8-85
- Clear Pkt 8-85
- Clear Port 8-85
- Disable Administered-Connection 8-86
  - Parameters 8-86
- Disable Synchronization-Switch 8-86
- Display Events 8-87
  - Input Form 8-87
  - Output 8-88
- Display Fiber-Link 8-89
  - Parameters 8-89
- Display Initcauses 8-89
  - Output 8-90
- Display Port 8-92
  - Output 8-92
- Display Synchronization 8-92
- Display System-Parameters Maintenance 8-93
    - EXAMPLES 8-93
  - Output 8-93
    - Scheduled Maintenance 8-94
- Display Time 8-100
  - Output 8-100
- Enable Administered-Connection 8-101
  - Parameters 8-101
- Enable Synchronization-Switch 8-101
- Enable Test-Number 8-101
  - Examples 8-101
  - Parameters 8-102
- Get Vector 8-102
  - Parameters 8-103
- List Cabinet 8-105
  - Output 8-106
- List Configuration 8-106

Contents

Parameters 8-107

Examples 8-107
Output 8-107
Assigned Ports 8-108

- List Config Software-Version 8-109

Parameters 8-110

Output 8-110

Tape and Disk Second Copy Fields 8-111
UPDATE FILE Section 8-111
SOFTWARE VERSION Section 8-111
TRANSLATION DATE Section 8-112
SYSTEM CONFIGURATION Section 8-113
ANNOUNCEMENT DATE Section 8-113
COMPATIBILITY INDEX Section 8-113

- List Disabled-MOs 8-116

Output 8-117

- List Fiber-Link 8-117

Output 8-118

- List History 8-118

Output 8-119

- List ISDN-Testcall 8-121

Output 8-122

- List Marked-Ports 8-123

Output 8-123

- List Measurements DS1 8-123

Parameters 8-124

Examples 8-124

Output 8-124

- List PMS-Down 8-128

Parameters 8-129

Output 8-129

- List Sys-Link 8-129

Output 8-130

- List Testcalls 8-131
- Mark Port 8-132
- Monitor BCMS 8-132

Parameters 8-132

Contents

Examples 8-132
Output for the System Option 8-133
Output for the Split Option 8-135
- Monitor Health 8-137
- Monitor Security Violations 8-137
Output 8-138
SYSTEM MANAGEMENT VIOLATIONS 8-138
REMOTE ACCESS VIOLATIONS 8-138
- Monitor System 8-139
Parameters 8-140
Output 8-140
- Monitor Traffic 8-142
Parameters 8-143
Output 8-143
- Monitor Trunk 8-144
- Recycle Carrier 8-145
- Release Commands 8-145
Parameters 8-146
Examples 8-146
Output 8-146
- Reset Board 8-147
- Reset Disk 8-147
- Reset Fiber-Link 8-148
Parameters 8-148
Examples 8-148
- Reset Host-Adapter 8-148
- Reset Maintenance 8-149
- Reset Packet-Interface 8-149
Simplex SPE 8-150
Duplicated SPE Standby Packet Interface 8-150
Duplicated SPE Active Packet Interface 8-150
Standby SPE available 8-150
Standby SPE not available 8-151
Parameters 8-151
- Reset PNC Interchange 8-151
Parameters 8-152

Contents

Output 8-152
Parameters 8-154
Output 8-154
■ Reset Port-Network 8-155
Parameters 8-155
Examples 8-155
Output 8-156
■ Reset SPE-Standby 8-156
Parameters 8-157
Output 8-157
■ Reset System 8-157
Parameters 8-159
Examples 8-159
Output 8-159
■ Reset System Interchange 8-160
Parameters 8-162
Output 8-162
■ Reset Tape 8-162
Parameters 8-163
Examples 8-163
■ Restore Announcements 8-163
Parameters 8-165
Output 8-165
■ Restore Disk 8-165
Parameters 8-166
Examples 8-166
Output 8-166
■ Resume Hardware-Group 8-167
Output 8-167
■ Save Announcements 8-167
Parameters 8-170
Examples 8-170
Output 8-171
■ Save Translation 8-171
Parameters 8-172

Contents

Examples 8-172
Output 8-173
- Set PNC 8-174
  Parameters 8-174
- Set Signaling-Group 8-174
  Parameters 8-175
- Set SNC 8-175
  Parameters 8-175
- Set Synchronization 8-175
  Parameters 8-176
- Set TDM 8-176
  Parameters 8-176
  Examples 8-176
- Set Time 8-177
  Input Form 8-177
- Set Tone-Clock 8-178
  Parameters 8-178
  Examples 8-178
- Set Vector 8-178
  Execution 8-179
    Simplex SPE 8-179
    Duplicated SPE Options 8-180
    Feature Interactions 8-180
    Parameters 8-181
- Status Access-Endpoint 8-182
  Output 8-183
- Status Administered-Connection 8-183
  Parameters 8-184
  Output 8-184
- Status Attendant 8-186
  Parameters 8-187
  Output 8-187
- Status BRI-Port 8-187
  Output 8-188
  Interpreting Results of BRI-Port Status Reports 8-190
- Status Cabinet 8-198

Contents

Output 8-199
- Status CDR-Link 8-201
  - Output 8-201
- Status Data-Module 8-202
  - Output 8-202
- Status Hardware-Group 8-203
  - Output 8-204
- Status Health 8-205
  - Parameters 8-206
  - Output 8-206
  - Feature Interactions 8-209
- Status ISDN-Testcall 8-210
  - Examples 8-210
  - Output 8-211
- Status Journal-Link 8-212
  - Parameters 8-212
  - Examples 8-212
  - Output 8-213
- Status Link 8-213
  - Parameters 8-215
  - Output 8-216
- Status Logins 8-221
  - Output 8-221
- Status Packet-Interface 8-223
  - Output 8-223
- Status Periodic-Scheduled 8-224
  - Output 8-225
- Status PGATE-Port 8-226
- Status PMS-Link 8-226
  - Output 8-227
- Status PNC 8-228
  - Output 8-228
- Status Port-Network 8-232
  - Output 8-233
- Status PRI-Endpoint 8-236

Contents

Output 8-237
- Status Processor-Channel 8-238
  - Parameters 8-239
  - Output 8-239
- Status Signaling-Group 8-239
  - Parameters 8-240
  - Output 8-240
- Status SPE 8-242
  - Output 8-243
- Status SP-Link 8-246
  - Output 8-247
- Status Station 8-247
  - Output 8-248
- Status Switch-Node 8-249
  - Parameters 8-250
  - Output 8-250
- Status Synchronization 8-251
  - Output 8-252
- Status Sys-link 8-252
  - Parameters 8-253
  - Examples 8-253
  - Output 8-254
- Status Trunk 8-256
  - Parameters 8-256
  - Examples 8-256
  - Output 8-257
- Status TSC-Administered 8-258
  - Examples 8-258
  - Parameters 8-259
  - Output 8-259
- Status TTI 8-260
  - Output 8-261
- Test Access-Endpoint 8-262
  - Output 8-262
- Test Alarms 8-263

Contents

Parameters 8-264
Examples 8-264
Input Form 8-265
Output 8-266
- Test Analog-testcall 8-268
- Test Board 8-268
- Test CDR-Link 8-269
Parameters 8-269
- Test Customer-Alarm 8-269
- Test Data-Module 8-270
- Test Disk 8-270
- Test DS1-Facility 8-270
Parameters 8-271
Examples 8-271
- Test DS1-Loop 8-271
EXAMPLES 8-272
Defaults 8-272
Parameters 8-273
OUTPUT 8-274
FEATURE INTERACTIONS 8-275
- Test Duplication-Interface 8-275
Output 8-276
- Test EDA-External-Device-Alrm 8-277
Defaults 8-277
Parameters 8-278
Examples 8-279
Output 8-279
- Test Environment 8-280
Output 8-281
- Test Fiber-Link 8-282
Parameters 8-282
Examples 8-283
Output 8-283
- Test Hardware-Group 8-283
Feature Interactions 8-285

Contents

Parameters 8-286
Examples 8-286
Form Input 8-286
Output 8-289
- Test Host-Adapter 8-290
- Test INADS-Link 8-290
- Test ISDN-Testcall 8-290
Parameters 8-291
Examples 8-291
Output 8-291
- Test Journal-Printer 8-291
Parameters 8-292
Output 8-292
- Test LED 8-292
- Test Link 8-292
Parameters 8-293
Output 8-293
- Test Maintenance 8-293
Output 8-294
- Test Mass-Storage 8-294
- Test Memory 8-295
Parameters 8-296
Output 8-296
- Test Modem-Pool 8-296
Parameters 8-297
Output 8-297
- Test MSSNET 8-297
Parameters 8-298
Output 8-298
- Test Packet-Interface 8-298
Parameters 8-299
- Test PKT 8-299
- Test PMS-Link 8-299
- Test Port 8-299
- Test PRI-Endpoint 8-299

Contents

Output 8-300
- Test Processor 8-300
- Test Signaling-Group 8-300
  Parameters 8-301
- Test SPE-Standby 8-301
  Output 8-302
- Test SP-Link 8-303
  Output 8-303
- Test Station 8-304
  Output 8-304
- Test Stored-Data 8-304
- Test Switch-Control 8-305
  Long 8-305
- Test Synchronization 8-305
  Parameters 8-306
- Test Sys-Link 8-306
  Parameters 8-306
  Examples 8-306
  Output 8-307
- Test Tape 8-307
- Test TDM 8-308
- Test Tone-Clock 8-308
- Test Trunk 8-308
- Test TSC-Administered 8-308
- Upgrade Software 8-308
  Parameters 8-310
  Examples 8-311
  Input 8-311
    Output 8-312
      Simplex SPE 8-313
      Duplicated SPE 8-314
  Feature Interactions 8-317
    System Restarts 8-317
    Error and Alarm Log 8-317
    Busy Outs 8-317
    Multi-User Contention 8-318

Contents

Periodic and Scheduled Maintenance 8-318
Command History Log 8-318
Alarm Origination 8-318
Enable All 8-318

9 Maintenance Object Repair Procedures 9-1

- Alarms: Order of Investigation 9-2
- Test Number Index 9-5

A Maintenance Object Repair Procedures ABRI-PORT to AUX-TRK A-1

- ABRI-PORT (ASAI ISDN-BRI Port) A-1
- AC-POWER for AC-Powered Systems A-2
  - Nominal Power Holdover A-3
  - Hardware Error Log Entries and Test to Clear Values A-3
  - System Technician-Demanded Tests: Descriptions and Error Codes A-3
    - AC Power Query Test (#78) A-4
- AC-POWER for DC-Powered Systems A-7
  - Hardware Error Log Entries and Test to Clear Values A-8
  - System Technician-Demanded Tests: Descriptions and Error Codes A-9
    - AC Power Query Test (#78) A-11
- ADM-CONN (Administered Connection) A-12
  - Hardware Error Log Entries and Test to Clear Values A-13
    - For all ADM-CONN errors: A-14
- ADX16D-B (16 Port AUDIX Circuit Pack) A-17
- ADXCL-BD (AUDIX Circuit Pack) A-18
- ADX16D-P (16-Port AUDIX Digital Port) A-19
  - Shutting Down DEFINITY AUDIX A-20

Contents

Hardware Error Log Entries and Test to Clear Values A-21

System Technician-Demanded Tests: Descriptions and Error Codes A-23

NO-OP Tests A-23
NPE Crosstalk Test (#9) A-24
Voice and Control Channel Local Loop Test (#13) A-28

- ADXCL-PT (AUDIX Analog Line/Control Link) A-33

Shutting Down DEFINITY AUDIX A-34

Hardware Error Log Entries and Test to Clear Values A-35

System Technician-Demanded Tests: Descriptions and Error Codes A-36

NO-OP Tests A-36
NPE Crosstalk Test (#6) A-37
Conference Circuit Test (#7) A-40
Loop Around Test (#161) A-42

- ADXDP-BD (AUDIX Circuit Pack) A-45
- ADXDP-PT (AUDIX Digital Port) A-46

Shutting Down DEFINITY AUDIX A-47

Hardware Error Log Entries and Test to Clear Values A-48

System Technician-Demanded Tests: Descriptions and Error Codes A-50

NO-OP Tests A-50
NPE Crosstalk Test (#9) A-51
Voice and Control Channel Local Loop Test (#13) A-55

- ALARM-PT (ALARM PORT) A-60

Hardware Error Log Entries and Test to Clear Values A-61

System Technician-Demanded Tests: Descriptions and Error Codes A-62

Battery Feed Test (also called Port Diagnostic Test) (#35) A-63
Station Status and Translation Audits and Updates Test (#36) A-65

- ANL-16-L (16-Port Analog Line) A-67

Ringing Caused by Maintenance Testing A-68

Contents

Hardware Error Log Entries and Test to Clear Values A-69

System Technician-Demanded Tests: Descriptions and Error Codes A-71

NPE Crosstalk Test (#6) A-72
Conference Circuit Test (#7) A-75
Battery Feed Test (also called Port Diagnostic Test) (#35) A-77
Station Status and Translation Audits and Updates Test (#36) A-80
Station Present Test (also called Ringing Application Test) (#48) A-83
Loop Around Test (#161) A-86

- ANL-BD (Analog Line Circuit Pack) A-90
- ANL-LINE, ANL-NE-L (8-Port Analog Line) A-91

Hardware Error Log Entries and Test to Clear Values A-92

System Technician-Demanded Tests: Descriptions and Error Codes A-94

NPE Crosstalk Test (#6) A-95
Battery Feed Test (also called Port Diagnostic Test) (#35) A-99
Station Status and Translation Audits and Updates Test (#36) A-102
Loop Around and Conference Test (#47) A-105
Station Present Test (also called Ringing Application Test) (#48) A-113

- ANN-BD (Announcement Circuit Pack) A-116

Essential Service Information A-116

Announcement Administration A-117

Announcement Session A-118

Saving and Restoring Announcements A-118

Precaution for TN750 (no suffix) A-119

Error Log Entries and Test to Clear Values A-120

System Technician-Demanded Tests: Descriptions and Error Codes A-124

Angel-Speech Processor Handshake Test (#208) A-125
Announcement Checksum Test (#209) A-127
Locked Announcement Circuit Pack A-130

Contents

140AY Loop Around Test (#210) A-131
Super Frame Match Inquiry Test (#211) A-135
Clock Match Inquiry Test (#212) A-136

- ANN-PT (Announcement Port) A-139

Essential Service Information A-140

Hardware Error Log Entries and Test to Clear Values A-141

System Technician-Demanded Tests: Descriptions and Error Codes A-143

Channel Administration Memory Array (CAMA) Test (#205) A-144
Playback Speech Memory Array (PSMA) Test (#206) A-146
140AY Channel Sanity Inquiry Test (#222) A-150
Announcement Board Locked Condition A-151

- ANNOUNCE A-152

Hardware Error Log Entries A-154

ANNOUNCE Error Code Aux Data A-155

- ASAI-ADJ (Adjunct-Switch Application Interface) A-157
- AUDIX-BD (AUDIX Circuit Pack) A-158
- AUDIX-PT (AUDIX Port) A-159
- AUX-BD (Auxiliary Trunk Circuit Pack) A-160
- AUX-TRK (Auxiliary Trunk) A-161

Hardware Error Log Entries and Test to Clear Values A-163

System Technician-Demanded Tests: Descriptions and Error Codes A-165

NPE Crosstalk Test (#6) A-166
Loop Around and Conference Test (#33) A-169
Åudit Update Test (#36) A-174
Diagnostic Test—Auxiliary Trunk Test (#114) A-175

B Maintenance Object Repair Procedures BRI-BD to BRI-SET B-1

- BRI-BD (ISDN-BRI Line Circuit Pack) B-1

LEDS B-2

Contents

Hardware Error Log Entries and Test to Clear Values B-3

System Technician-Demanded Tests: Descriptions and Error Codes B-8

NPE Audit Test (#50) B-8
Control Channel Loop Around Test (#52) B-8
SAKI Sanity Test (#53) B-8
LANBIC Receive Parity Error Counter Test (#595) B-9

- BRI-DAT (ISDN-BRI Data Module) B-11
- BRI-PORT (ISDN-BRI Port), ABRI-PORT (ASAI ISDN-BRI Port)] B-12

Hardware Error Log Entries and Test to Clear Values B-16

System Technician-Demanded Tests: Descriptions and Error Codes B-20

NPE Crosstalk Test (#617) B-21
BRI Port Local LAN Loop Around Test (#618) B-23
BRI Port Local TDM Loop Around Test (#619) B-26
Electronic Power Feed Restoral Test (#620) B-31
Level 1 Status Inquiry Test (#621) B-32
Electronic Power Feed Inquiry (#622) B-37
Layer 1 Transmission Error Counter Test (#624) B-39
Receive FIFO Overflow Error Counter Test (#625) B-41
Clear Error Counters Test (#270) B-43

- BRI-SET, ASAI-ADJ, BRI-DAT B-44

Hardware Error Log Entries and Test to Clear Values B-47

Signaling Link Status Test (#626) B-60
BRI Remote Loop Back Test (#627) B-64
BRI XID Test (#628) B-68
BRI Layer 3 Query Test (#629) B-72
BRI Set Audits Test (#630) B-76
SPID Facility Test B-79

Contents

C **Maintenance Object Repair Procedures CABINET to CUST-ALM** C-1

- CABINET (Cabinet Sensors) C-1
  - Variable-Speed Fans C-3
  - Nonvariable-Speed Fans C-3
  - Replacing Variable-Speed Fans C-4
  - Replacing the Fan Power Filter C-4
  - Replacing Nonvariable-Speed Fans C-5
    - First Determine Which Fans Are Defective C-6
  - Replacing the AHD1 Circuit Pack C-7
  - Hardware Error Log Entries and Test to Clear Values C-9
  - System Technician-Demanded Tests: Descriptions and Error Codes C-10
    - Cabinet Temperature Query Test (#122) C-11
- CARR-POW (Carrier Power Supply) C-17
  - Recycling Power Supplies C-18
  - AC-Powered Cabinets C-19
  - DC-Powered Cabinets C-22
  - Neon Lamp Power C-27
  - Replacing Carrier Port Power Supplies C-28
  - Replacing TN736 Power Supply Circuit Packs C-29
  - Hardware Error Log Entries and Test to Clear Values C-29
  - System Technician-Demanded Tests: Descriptions and Error Codes C-30
    - OLS Recycle Test (#126) C-32
    - Off-Line Switcher (OLS) Query Test (#127) C-34
- CDR-LNK (Call Detail Recording Link) C-41
- CLSFY-BD (Call Classifier Circuit Pack) C-42
- CLSFY-PT (Call Classifier Port) C-43
  - Hardware Error Log Entries and Test to Clear Values C-44
  - System Technician-Demanded Tests: Descriptions and Error Codes C-45
    - Tone Detection Verification Test (#42) C-46

Contents

Tone Detector Audit/Update Test (#43) C-49

- CO-BD (Central Office Trunk Circuit Pack) C-50
- CO-DS1 (DS1 CO Trunk) C-51

Hardware Error Log Entries and Test to Clear Values C-53

System Technician-Demanded Tests: Descriptions and Error Codes C-55

NPE Crosstalk Test (#6) C-56
Conference Circuit Test (#7) C-59
Port Audit and Update Test (#36) C-61
DS1 CO Dial Tone Seizure Test (#314) C-62

- CO-TRK (Analog CO Trunk) C-65

Loop Start Operation C-66

Ground Start Operation C-66

Error Log Entries and Test to Clear Values C-68

System Technician-Demanded Tests: Descriptions And Error Codes C-74

Dial Tone Test (#0) C-75
CO Demand Diagnostic Test (#3) C-79
NPE Crosstalk Test (#6) C-82
Loop Around and Conference Circuit Test (#33) C-85
Port Audit Update Test (#36) C-88
Transmission test (#844-848) C-89

- CONFIG (System Configuration) C-95

Hardware Error Log Entries and Test to Clear Values C-96

- CUST-ALM (Customer-Provided Alarming Device) C-103

System Technician-Demanded Tests: Descriptions and Error Codes C-104

Customer-Provided Alarming Device Test (#115) C-104

D Maintenance Object Repair Procedures DAT-LINE to DUPINT D-1

- DAT-LINE (Data Line Port) D-1

Hardware Error Log Entries and Test to Clear Values D-3

Contents

System Technician-Demanded Tests: Descriptions and Error Codes D-4

NPE Crosstalk Test (#6) D-5
Conference Circuit Test (#7) D-8
Audit Update Test (#36) D-10
Digital Loop Around Test (#171) D-11

- DC-POWER (Single Carrier Cabinet Environment) D-16

Hardware Error Log Entries and Test to Clear Values D-18

System Technician-Demanded Tests: Descriptions and Error Codes D-19

Single Carrier Cabinet Power Query Test (#79) D-20

- DETR-BD (Tone Detector Circuit) D-22
- DID-BD (Direct Inward Dial Trunk Circuit Pack) D-23
- DID-DS1 (Direct Inward Dial Trunk) D-24

Hardware Error Log Entries and Test to Clear Values D-25

System Technician-Demanded Tests: Descriptions and Error Codes D-27

NPE Crosstalk Test (#6) D-28
Conference Circuit Test (#7) D-31
Port Audit and Update Test (#36) D-33

- DID-TRK (Direct Inward Dial Trunk) D-34

DID Trunk Operation D-35

DID Trunk Testing D-35
Ports Out-of-Service without Errors or Alarms D-36

Hardware Error Log Entries and Test to Clear Values D-37

System Technician-Demanded Tests: Descriptions and Error Codes D-40

NPE Crosstalk Test (#6) D-41
Loop Around and Conference Circuit Test (#33) D-45
Port Diagnostic Test (#35) D-51
Port Audit Update Test (#36) D-54

- DIG-BD (Digital Line Circuit Pack) D-55
- DIG-LINE (Digital Line) D-56

Downloading of Terminal Parameters D-57

Programmable Terminals D-57

Contents

Terminal Types: D-57

Circuit Packs: D-58
Downloadable Terminal Parameters D-58
Nonvolatile Memory D-59
Download Actions D-59
Automatic Download Actions D-59
Demand Download Actions D-60
Status of Parameter Downloads D-61

Hardware Error Log Entries and Test to Clear Values D-64

System Technician-Demanded Tests: Descriptions and Error Codes D-67

Digital Terminal Remote Loop Around Test (#1201) D-68
Digital Line NPE Crosstalk Test (#9) D-73
Digital Line Electronic Power Feed/Positive Temperature Coefficient Test (#11) D-77
Voice and Control Channel Local Loop Test (#13) D-80
DIG-LINE Station Lamp Updates Test (#16) D-85
Digital Station Audits Test (#17) D-88

- DIOD-BD (DIOD Trunk Circuit Pack) D-91
- DIOD-TRK (DIOD Trunk) D-92

Loop Start Operation D-93

Outgoing Call D-93
Incoming Call D-93
Direct Inward Dialing (DID) D-93

Hardware Error Log Entries and Test to Clear Values D-94

System Technician-Demanded Tests: Descriptions And Error Codes D-97
Dial Tone Test (#0) D-98
NPE Crosstalk Test (#6) D-101
Loop Around and Conference Circuit Test (#33) D-104
Port Audit Update Test (#36) D-106

- DISK (MSS Disk Circuit Pack) D-107

General Trouble Shooting Information D-109

Replacing the Disk Circuit Pack D-110

Hardware Error Log Entries and Test to Clear Values D-111

System Technician-Demanded Tests: Descriptions and Error Codes D-114

Contents

Disk Reset Test (#809 and #894) D-115
Disk Write-Read Test (#810) D-121
Disk Audit Test (#811) D-126
Disk Firmware Error Counters Read and Clear Test (#812) D-130
Disk Diagnostic Test (#813) D-135
Disk Loop-Around Tests (#814) D-139
Disk Status Test (#815) D-144
Disk Reset Test (#894) D-148

- DS1-BD (DS1 Interface Circuit Pack) D-149

Hardware Error Log Entries and Test to Clear Values D-153

System Technician-Demanded Tests: Descriptions and Error Codes D-161

NPE Connection Audit Test (#50): D-163
Control Channel Loop Around Test (#52) D-164
SAKI Sanity Test (#53) D-165
Internal Loop Around Test (#135) D-166
Loss of Signal Alarm Inquiry Test (#138) D-170
Blue Alarm Inquiry Test (#139) D-178

Line Loopback Alarm D-178

Payload Loopback Alarm D-178

Red Alarm Inquiry Test (#140) D-180
Yellow Alarm Inquiry Test (#141) D-182
Major Alarm Inquiry Test (#142) D-185
Minor Alarm Inquiry Test (#143) D-187
Slip Alarm Inquiry Test (144) D-189
Misframe Alarm Inquiry Test (#145) D-191
Translation Update Test (#146) D-193
DS1 Board Loopback Test (#1209) D-194
CSU Equipment Loopback Test (#1210) D-197
CSU Repeater Loopback Test (#1211) D-201
CPE Loopback Jack Test (#1212) D-205
Far CSU Loopback Test (#1213) D-209
One-Way Span Test (#1214) D-213
Inject Single Bit Error Test (#1215) D-216
End Loopback/Span Test (#1216) D-218
ICSU Status LEDs Test (#1227) D-221

- DS1-FAC (DS1 Facility) D-223

DS1 Facility Busyout D-225

DS1 Facility Administration D-225

Replacing a DS1 Facility D-225
Installing a DS1 Facility D-226

Contents

Removing a DS1 Facility D-226
DS1 Interface Options D-227
Passes Far-end Clock D-227
Digital Data Compatible D-227
DS1C-1 and DS1C-2 Line Compensation D-227
Zero Code Suppression D-227
Framing Mode D-228
DS1 Converter Performance Measurements Report D-228
Clearing Firmware Errors D-228
Error Log Entries and Test to Clear Values D-229
System Technician-Demanded Tests: Descriptions And Error Codes D-235
Far-End Internal Loopback Test (#797) D-235
DS1 Interface Options Audit Test (#798) D-240
Near-end External Loopback Test (#799) D-242
Failure Audit (#949) D-246
Clear Firmware Counters (#984) D-247

- DS1C-BD (DS1 Converter) D-248

DS1C Administration and Board Insertion D-251
DS1C LEDs D-252
Clear Firmware-Counters Command D-253
Replacing a DS1C Circuit Pack—Simplex PNC D-253
Replacing a DS1C Circuit Pack—Duplicated PNC D-254
Hardware Error Log Entries and Test to Clear Values D-256
System Technician-Demanded Tests: Descriptions And Error Codes D-261
Reset Test (#787) D-262
Far-end DS1 Converter Circuit Pack Loopback Test (#788) D-264
Far-end Lightwave Transceiver Loopback Test (#789) D-267
DS1 Facilities Connectivity Test (#790) D-271
Board Options Audit (#795) D-274
Failure Audit (#949) D-276

- DT-LN-BD (Data Line Circuit Pack) D-278
- DTMR-PT (Dual Tone Multi-Frequency Receiver Port) D-279

Hardware Error Log Entries and Test to Clear Values D-280

Contents

System Technician-Demanded Tests: Descriptions and Error Codes D-281

Tone Detection Verification Test (#42) D-282
Tone Detector Audit/Update Test (#43) D-284

- DUP-CHL (Duplication Interface) D-285

Duplication Interface Functions D-285

DUP-CHL Tests D-286

Administration D-287
In-line Errors D-287
MAJOR vs. MINOR Alarms D-287
MO Interactions D-287

Hardware Error Log Entries and Test to Clear Values D-289

System Technician-Demanded Tests: Descriptions and Error Codes D-292

Remote Loop-Around Test (#869) D-293
FIFO Full Interrupt Test (#871) D-296
Memory Shadowing Disable Test (#872) D-300
State-of-Health (#873) D-305
Duplication Channel Test (#874) D-308
Remote SPE Error Interrupt Test (#875) D-311
Memory Shadowing Test (#876) D-316
Status Register Comparison Test (#980) D-320

Replacing Duplication Channel Components D-323

Replacing the STANDBY Duplication Interface (DUPINT) Circuit Pack D-323

Replacing the ACTIVE Duplication Interface (DUPINT) Circuit Pack D-325

Replacing the Duplication Interface Interconnecting Cable D-327

- DUPINT (Duplication Interface Circuit Pack) D-330

Duplication Interface Maintenance Operation D-330

Administration D-331
In-line Errors D-331
MAJOR vs. MINOR Alarms D-331
Maintenance Object Interactions D-332

Error Log Entries and Test to Clear Values D-333

System Technician-Demanded Tests: Descriptions and Error Codes D-335

Contents

Control Register Test (#865) D-336
Mailbox Loop-around Test (#866) D-337
Local Loop-around Test (#867) D-339
Memory Shadowing Bounds Test (#868) D-341
Active DUPINT Reset Test (#870) D-344
Active DUPINT HFAIL/STDONE Check Test (#979) D-346

E Maintenance Object Repair Procedures EMG-XFER to EXT-DEV ADMEN? Y E-1

- EMG-XFER (Emergency Transfer) E-1
  - Emergency Transfer Switches: EPNs and Simplex SPE E-2
  - Emergency Transfer Switches: Duplicated SPEs E-2
  - Emergency Transfer Status E-2
  - Hardware Error Log Entries and Test to Clear Values E-3
  - System Technician-Demanded Tests: Descriptions and Error Codes E-4
    - Emergency Transfer Query Test (#124) E-6
- EPN-SNTY (EPN Sanity Audit) E-8
  - Hardware Error Log Entries and Test to Clear Values E-9
- ERR-LOG (Error Log) E-10
  - Hardware Error Log Entries E-10
- ETR-PT (Enhanced Tone Receiver Port) E-11
  - Hardware Error Log Entries and Test to Clear Values E-12
  - System Technician-Demanded Tests: Descriptions and Error Codes E-13
    - Tone Detection Verification Test (#42) E-14
    - Tone Detector Audit/Update Test (#43) E-17
- EXP-INTF (Expansion Interface Circuit Pack) E-18
  - EI In-Service Mechanism E-25
  - Expansion Interface LEDs E-25

Contents

EI and Tone-Clock Interactions E-27

Replacing an EI Circuit Pack—Simplex PNC E-32

Replacing an EI Circuit Pack—Duplicated PNC E-33

Expansion Interface Manual Loop Back Procedure E-34

Hardware Error Log Entries and Test to Clear Values E-37

System Technician-Demanded Tests: Descriptions and Error Codes E-44

Expansion Interface Neighbor Query Test (#237) E-45
Expansion Interface Fiber Out-of-Frame (FOOF) Query Test (#238) E-48
Expansion Interface Local Looparound (#240) E-50
Expansion Interface 2-way Transmission Test (#241) E-55
Expansion Interface Lightwave Transceiver Looparound Test (#242) E-63
Expansion Interface Control Channel Test (#316) E-73
Expansion Interface Reset Test (#336) E-75
Expansion Interface Packet Interface Test (#589) E-78

- EXP-PN (Expansion Port Network) E-89

EPN Restarts E-89

EPN Warm Restarts E-89
EPN Cold Restarts E-90
EPN Restart Escalation E-90

Connectivity Alarming E-90

Hardware Error Log Entries and 'Test to Clear' Values E-91

System Technician-Demanded Tests: Descriptions And Error Codes E-92

EPN Cold Restart (#955) E-92
EPN Warm Restart (#956) E-94

- EXT-DEV ADMIN? N (External Device Alarm) E-96

Hardware Error Log Entries and Test to Clear Values E-97

System Technician-Demanded Tests: Descriptions and Error Codes E-97

External Device Alarm Test (#120) E-100

Contents

- EXT-DEV ADMIN? Y (External Device Alarm) E-102
  - Hardware Error Log Entries and Test to Clear Values E-103
  - System Technician-Demanded Tests: Descriptions and Error Codes E-104
    - External Device Alarm Test (#120) E-105

F Maintenance Object Repair Procedures FIBER-LK F-1

- FIBER-LK (Fiber Link) F-1
  - LEDs for Circuit Packs on a Fiber Link F-8
  - Hardware Error Log Entries and Test to Clear Values F-10
  - System Technician-Demanded Tests: Descriptions and Error Codes F-12
    - Expansion Interface Neighbor Query Test (#237) F-14
    - Expansion Interface Fiber Out-of-Frame (FOOF) Query Test (#238) F-16
    - SNI Off-Board Destructive Facility Test (#756) F-18
    - SNI Destructive Facility Test (#757) F-23
    - Configuration Audit (#759) F-26
    - Fiber Link Reset Test (#768) F-67
    - Failure Audit (#777) F-69
    - SNI Fiber Out of Frame Query (#989) F-73

G Maintenance Object Repair Procedures GPTD-PT G-1

- GPTD-PT (General Purpose Tone Detector Port) G-1
  - Hardware Error Log Entries and Test to G-3
  - System Technician-Demanded Tests: Descriptions and Error Codes G-4
    - Tone Detection Verification Test (#42) G-5
    - Tone Detector Audit/Update Test (#43) G-8

Contents

H **Maintenance Object Repair Procedures H-ADAPTR to HBY-LINE** H-1

- H-ADAPTR (MSS Host Adapter) H-1
  - Circuit Pack Replacement Procedures H-2
  - Hardware Error Log Entries and Test to Clear Values H-4
  - System Technician-Demanded Tests: Descriptions and Error Codes H-7
    - Host Adapter Reset Test (#820 and #893) H-8
    - Host Adapter Read and Clear Firmware Error Counters Test (#822) H-12
    - Host Adapter Diagnostic Test (#823) H-17
    - Host Adapter Loop Around Test (#824) H-21
    - Host Adapter Status Test (#825) H-25
    - Host Adapter Reset Test (#893) H-29
- HYB-BD (Hybrid Line Circuit Pack) H-30
- HYB-LINE (Hybrid Line) H-31
  - Hardware Error Log Entries and Test to Clear Values H-34
  - System Technician-Demanded Tests: Descriptions and Error Codes H-36
    - NPE Crosstalk Test (#6) H-37
    - Hybrid Electronic Power Feed Test (#56) H-40
    - Hybrid Circuit and Conference Circuit Test (#57) H-42
    - Hybrid Line Local Digital Loop Around Test (#58) H-48
    - Hybrid Line Remote Digital Loop Around Test (#59) H-50
    - Hybrid Line Lamp Updates Test (#60) H-52
    - Hybrid Line Audits Test (#61) H-54
    - Hybrid Line Ringer Update Test (#62) H-57

I **Maintenance Object Repair Procedures INADS to ISDN-TRK** I-1

- INADS (INADS Link) I-1
  - Hardware Error Log Entries and Test to Clear Values I-2

Contents

System Technician-Demanded Tests: Descriptions and Error Codes I-2

INADS Link Test (No Test Number) I-2

- ISDN-LNK (ISDN-PRI Signaling Link Port) I-5

Hardware Error Log Entries and Test to Clear Values I-7

System Technician-Demanded Tests: Descriptions and Error Codes I-9

Signaling Link Board Check (#643) I-10
Signaling Port LAN Loopback Test (#939) I-11

- ISDN-SGR (ISDN-PRI Signaling Group) I-14

Hardware Error Log Entries and Test to Clear Values I-21

System Technician-Demanded Tests: Descriptions and Error Codes I-27

Primary Signaling Link Hardware Check (#636) I-28
Remote Layer 3 Query (#637) I-29
Secondary Signaling Link Hardware Check (#639) I-32

- ISDN-TRK (DS1 ISDN Trunk) I-33

Alarming Based on Service States I-35

DS1 ISDN Trunk Service States I-35

Hardware Error Log Entries and Test to Clear Values I-40

System Technician-Demanded Tests: Descriptions and Error Codes I-43

NPE Crosstalk Test (#6) I-44
Conference Circuit Test (#7) I-47
Audit and Update Test (#36) I-49
Signaling Link State Check Test (#255) I-50
Service State Audit (#256) I-51
Call State Audit Test (#257) I-54
ISDN Test Call Test (#258) I-56

Synchronous Test Calls I-57

Asynchronous Test Calls I-57

Contents

J **Maintenance Object Repair Procedures**
JNL-PRNT J-1

- JNL-PRNT (Journal Printer Link) J-1

L **Maintenance Object Repair Procedures**
LOG-SVN L-1

- LOG-SVN (Login Security Violation) L-1
  - Hardware Error Log Entries and Test to Clear Values L-2
    - Procedure to Retire SVN Alarm L-3

M **Maintenance Object Repair Procedures**
MAINT to M/T-PKT M-1

- MAINT (EPN Maintenance Circuit Pack) M-1
  - Hardware Error Log Entries and Test to Clear Values M-4
  - System Technician-Demanded Tests: Descriptions and Error Codes M-6
    - Sanity Handshake Test (#106) M-7
    - Management Terminal Channel Local Loop-Around Test (#228) M-10
    - Serial Channel Local Loop Around Test (#229) M-12
    - EPN Maintenance Circuit Pack Sanity Maze Test (#303) M-15
    - EPN Maintenance Circuit Pack Reset Test (#306) M-16
    - EPN Maintenance Circuit Pack Serial Link Test (#337) M-20
    - EPN Maintenance Circuit Pack Refresh Test (#854) M-22
- MEM-BD (32MB Memory Circuit Pack) M-25
  - Hardware Error Log Entries and Test to Clear Values M-27

Contents

System Technician-Demanded Tests: Descriptions and Error Codes M-29

Memory Single/Multiple Bit Error Audit (#902) M-30
Memory RAM Checksum Test (#903) M-33
Memory Parity Checker Test (#906) M-36
Memory Error Detection/Correction Test (#907) M-39
Memory Burst Read Test (#908) M-42

- MET-BD (MET Line Circuit Pack) M-45
- MET-LINE (MET Line) M-46

Hardware Error Log Entries and Test to Clear Values M-49

System Technician-Demanded Tests: Descriptions and Error Codes M-51

NPE Crosstalk Test (#6) M-52
Port Diagnostic Test (#35) M-55
MFAT Electronic Power Feed (#56) M-57
MET Circuit and Conference Circuit Test (#57) M-59
MET Line Station Lamp Updates Test (#60) M-63
MET Line Station Audits Test (#61) M-65
MET Line Ringer Update Test (#62) M-68

- MIS (Management Information System) M-70

Hardware Error Log Entries and Test to Clear Values M-71

- MODEM-BD (Modem Pool Circuit Pack) M-72
- MODEM-PT (Modem Pool Port) M-73

Integrated Modem Pools M-73

Combined Modem Pools M-74

Troubleshooting Modem-Pool Symptoms M-77

Testing Modem-Pools M-77

Hardware Error Log Entries and Test to Clear Values M-78

System Technician-Demanded Tests: Descriptions and Error Codes M-79

Modem Pool NPE Crosstalk Test (#96) M-80
Modem Pool Conference Test (#97) M-84
Modem Pool Conversion Resource Loop-Around Test (#98) M-88
Modem Pool Audit Test (#99) M-95

Contents

- M/T-ANL (Maintenance/Test Analog Port) M-96
  - Hardware Error Log Entries and Test to Clear Values M-98
  - System Technician-Demanded Tests: Descriptions and Error Codes M-99
    - NPE Crosstalk Test (#9) M-100
    - Analog Port Digital Loop Around Test (#13) M-103
    - Clear Error Counters (#270) M-106
    - Hook State Inquiry (#566) M-107
    - Analog Port Sanity Test (#963) M-108
- M/T-BD (Maintenance/Test Circuit Pack) M-109
  - Hardware Error Log Entries and Test to Clear Values M-110
  - System Technician-Demanded Tests: Descriptions and Error Codes M-112
- M/T-DIG (Maintenance/Test Digital Port) M-113
  - Hardware Error Log Entries and Test to Clear Values M-115
  - System Technician-Demanded Tests: Descriptions and Error Codes M-116
    - NPE Crosstalk Test (#9) M-117
    - Digital Port Loop Around Test (#13) M-120
    - Clear Error Counters (#270) M-123
    - Digital Port Sanity Test (#565) M-124
    - Hook State Inquiry (#566) M-127
- M/T-PKT (Maintenance/Test Packet Bus Port) M-128
  - Hardware Error Log Entries and Test to Clear Values M-129
  - System Technician-Demanded Tests: Descriptions and Error Codes M-131
    - Clear Error Counters (#270) M-132
    - Packet Bus Port Health Inquiry Test (#567) M-133

Contents

O **Maintenance Object Repair Procedures**
OPS-LINE O-1

- OPS-LINE (DS1 Off Premises Station Line) O-1
  - Hardware Error Log Entries and Test to Clear Values O-3
  - System Technician-Demanded Tests: Descriptions and Error Codes O-4
    - NPE Crosstalk Test (#6) O-5
    - Conference Circuit Test (#7) O-8
    - Audit and Update Test (#36) O-10
    - DS1 OPS Switchhook Inquiry Test (#312) O-12

P **Maintenance Object Repair Procedures**
PDATA-BD to PROCR P-1

- PDATA-BD (Packet Data Line Circuit Pack) P-1
  - Hardware Error Log Entries and Test to Clear Values P-2
    - LANHO Receive Parity Error Counter Test (#595) P-6
- PDATA-PT (Packet Data Line Port) P-8
  - System Ports and the PDATA Circuit Pack P-8
  - Data Applications and System Port Connectivity P-9
  - Testing the System Port Pool P-10
  - Identifying Components of an Application Link P-10
    - Locating MOs When the Data Application Link Fails P-10
    - Locating MOs When Only a Problem Port Is Known P-11
  - System Port Wiring Scheme P-13
  - Hardware Error Log Entries and Test to Clear Values P-17
  - System Technician-Demanded Tests: Descriptions and Error Codes P-20
    - LAPD Connectivity Test (#558) P-21

Contents

PDATA Port Local Loop-Around Test (#602) P-24
System Port Connectivity Test (#603) P-26

- PDMODULE (Processor Data Module) TDMODULE (Trunk Data Module) P-29

Stand-Alone DCP Data Modules P-30

Data Adaptors P-31

Configurations and Maintenance P-31

Hardware Error Log Entries and Test to Clear Values P-34

System Technician-Demanded Tests: Descriptions and Error Codes P-37

NPE Crosstalk Test (#9) P-38
Information and Control Channel Local Loop Test (#13) P-41
Data Module Audits Test (#17) P-45
Data Module Internal Loop Around Test (#175) P-49

- PE-BCHL (PRI Endpoint Port) P-55

Wideband Switching P-55

Signaling and B-Channel States P-56

Alarming Based on Service States P-56

PRI Endpoint Port Service States P-57

Hardware Error Log Entries and Test to Clear Values P-62
System Technician-Demanded Tests: Descriptions and Error Codes P-65
NPE Crosstalk Test (#6) P-66
Conference Circuit Test (#7) P-69
Audit and Update Test (#36) P-71
Signaling Link State Check Test (#255) P-72
Service State Audit (#256) P-73
Call State Audit Test (#257) P-75

- PGATE-BD (Packet Gateway Circuit Pack) P-77

Packet Gateway Circuit Pack P-77

Packet Gateway Congestion Controls P-77

Hardware Error Log Entries and Test to Clear Values P-78

System Technician-Demanded Tests: Descriptions and Error Codes P-84

Circuit Pack Restart Test (#252) P-84

Contents

Control Channel Loop-Around Test (#52) P-85
Circuit Pack Restart Test (#252) P-86
LANBIC Receive Parity Error Counter Test (#595) P-88
Receive FIFO Overflow Error Counter Test (#596) P-89
Invalid LAPD Frame Error Counter Test (#597) P-91
Packet Interface Test (#598) P-93
Congestion Query Test (#600) P-94
Link Status Test (#601) P-97

- PGATE-PT (Packet Gateway Port) P-99

Packet Gateway Applications P-99

Packet Gateway Configurations P-100

Link-Associated Maintenance Objects P-106

Identifying Maintenance Objects That Make Up a Link P-107

Tracing a Link to a Given Adjunct or DCS Link P-108

Tracing a Link When a Hop-Channel Is Involved P-109

Tracing a Link Given a Port or Trunk P-110

X.25 Protocol Errors P-111

Hardware Error Log Entries and Test to Clear Value P-112

System Technician-Demanded Tests: Descriptions and Error Codes P-117

Packet Gateway Switched Port Loop-Around Test (#599) P-118
Packet Gateway Port Local Loop-Around Test (#610) P-120
Packet Gateway Port Remote Loop-around Test (#611) P-123
Level 1 State Inquiry Test (#613) P-129
Link Status Test (#614) P-131
Session Status Query Test (#976) P-135
Session Restart Test (#977) P-137

- PKT-BUS (Packet Bus) P-139

Hardware Error Log Entries and Test to Clear Value P-141

System Technician-Demanded Tests: Descriptions and Error Codes P-144

Maintenance/Test Circuit Pack Query Test (#572) P-145
Packet Circuit Pack Audit Test (#573) P-149

- PKT-INT (Packet Interface Circuit Pack) P-150

Contents

Packet Interface Service Operations P-153

Administration P-153
Packet Interface Circuit Pack Replacement P-153
Demand Reset of a Packet Interface Board P-153
Service States P-154
Duplication Impact P-154
Maintenance Object Interactions P-156

Error Log Entries and Test to Clear Values P-158

System Technician-Demanded Tests: Descriptions and Error Codes P-166

Memory Checksum Test (#884) P-167
Private Loop Around Tests (#885) P-173
Maintenance Looparound Test (#886) P-181
Read and Clear Board Counters (#887) P-185
Active-Standby Peer Link Test (#888) P-192
Reset Test (#889) P-199

- PMS-LINK (Property Management System Link) P-205

Procedures for Restoring the PMS Link P-206

Hardware Error Log Entries and Test to Clear Values P-207

System Technician-Demanded Tests: Descriptions and Error Codes P-211

Link Tear Down Test (#213) P-212
Link Retry Test (#215) P-213

- PMS-PRNT/JNL-PRNT (PMS Printer Link) P-214

Procedures for Restoring the PMS Printer Link P-215

Hardware Error Log Entries and Test to Clear Values P-216

System Technician-Demanded Tests: Descriptions and Error Codes P-218

Link Tear Down Test (#213) P-219
Link Retry Test (#215) P-220

- PNC-DUP (PNC Duplication) P-221

PNC-DUP Related Commands P-222

Busyouts and PNC-DUP P-222

Enabling and Removing PNC Duplication P-224

Steady State LEDs P-226

PNC State of Health P-226

Contents

PNC State of Health Indexes P-227
Resolving Poor State of Health P-229
Refresh and Unrefresh of the Standby PNC P-229
PNC Interchanges P-229
Antithrashing and PNC Interchanges P-231
Repairs on the Standby PNC Components P-231
Interactions: SPE Resets and PNC Interchanges P-232
Fault Isolation Using Duplicated PNC P-233
Error Log Entries P-234

- POWER (Battery & Battery Charger) for AC-Powered Systems P-240
  - Replacing the Battery and Battery Charger P-242
  - Hardware Error Log Entries and Test to Clear Values P-243
  - System Technician-Demanded Tests: Descriptions and Error Codes P-244
    - Battery & Battery Charger Query Test (#5) P-245
- POWER (Battery & Battery Charger) for DC-Powered Systems P-250
  - Hardware Error Log Entries and Test to Clear Values P-251
  - System Technician-Demanded Tests: Descriptions and Error Codes P-252
    - Battery & Battery Charger Query Test (#5) P-253
- PRI-CDR/SEC-CDR (Call Detail Recording Link) P-254
  - Procedures for Restoring the CDR Link P-255
  - Hardware Error Log Entries and Test to Clear Values P-256
  - System Technician-Demanded Tests: Descriptions and Error Codes P-258
    - Link Tear Down Test (#213) P-259
    - Link Retry Test (#215) P-260
- PROC-SAN (Process Sanity Audits) P-261
  - Hardware Error Log Entries and Test to Clear Values P-262
- PROCR (RISC Processor Circuit Pack) P-263

Contents

Hardware Error Log Entries and Test to Clear Values P-266

System Technician-Demanded Tests: Descriptions and Error Codes P-267

Processor Cache Test (#895) P-268
Processor Cache Parity Audit (#896) P-271
Processor BOOTPROM Checksum Test (#897) P-274
Processor Parity Checker Test (#899) P-277
Processor Write Buffer Test (#900) P-280

R Maintenance Object Repair Procedures RING-GEN R-1

- RING-GEN (Analog Ring Generator) R-1

Hardware Error Log Entries and Test to Clear Values R-4

System Technician-Demanded Tests: Descriptions and Error Codes R-5

Analog Ring Generator Query Test (#118) R-8

S Maintenance Object Repair Procedures S-SYN-BD to SYSTEM S-1

- S-SYN-BD (Speech Synthesis Circuit Pack) S-1
- S-SYN-PT (Speech Synthesis Port) S-2

Hardware Error Log Entries and Test to Clear Values S-3

System Technician-Demanded Tests: Descriptions and Error Codes S-5

NPE Crosstalk Test (#6) S-6
Conference Circuit Test (#7) S-9
Speech Synthesis DTMF Receiver Test (#163) S-11
Speech Synthesis DTMF Receiver Inquiry Test (#164) S-13

Contents

Speech Synthesis DSP Tone Test (#165) S-14
Speech Synthesis Memory Test (#166) S-16
Speech Synthesis SSD Inquiry Test (#167) S-18
Speech Synthesis PSS Handshake Test (#168) S-19
Speech Synthesis Parameter Update Test (#169) S-21

- SN-CONF (Switch Node Configuration) S-22

Hardware Error Log Entries and Test to Clear Values S-23

System Technician-Demanded Tests: Descriptions and Error Codes S-26

Configuration Audit (#759) S-27
Incorrectly Connected Administered Fibers S-27
Incorrectly Connected Administered SNI-EI Fibers S-27
Incorrectly Connected SNI-SNI Fibers between 3 Switch Nodes S-28
Forcing SNI-SNI Fiber Connection S-28
Testing Multiple Fiber Connections S-28
Processor Route Audit Test (#760) S-30

- SNC-BD (Switch Node Clock Circuit Pack) S-33

SNC LEDs S-35

Clear Firmware-Counters Command S-35

Replacing SNC Circuit Packs S-36

Standard Reliability System (Simplex SPE, PNC and SNCs) S-36
High Reliability System (Duplicated SPE and SNCs, Simplex PNC) S-36
Critical Reliability System (Duplicated SPE and PNC) S-37

SNC-BD Hardware Error Log Entries and Test to Clear Values S-38

System Technician-Demanded Tests: Descriptions and Error Codes S-42

Configuration Audit (#759) S-43
Processor Route Audit Test (#760) S-64
Failure Audit (#777) S-67
SNC On-Board Test (#778) S-70
TPN Test (#779) S-73
Switch Node Clock Reset Test (#780) S-76
Clear Firmware Counters (#983) S-80

Contents

- SNC-LINK (Switch Node Clock Link) S-81
  - SNC-LINK Hardware Error Log Entries and Test to Clear Values S-82
  - System Technician-Demanded Tests: Descriptions and Error Codes S-86
- SNC-REF (Switch Node Clock Reference) S-87
  - SNC-REF Error Log Entries and Test to Clear Value S-88
  - System Technician-Demanded Tests: Descriptions and Error Codes S-90
- SNI-BD (SNI Circuit Pack) S-91
  - Remote EPNs S-94
  - SNI LEDs S-94
  - SNI Administration and SNI Board Insertion S-95
  - Clear Firmware-Counters Command S-96
  - Replacing an SNI Circuit Pack—Simplex PNC S-97
  - Replacing an SNI Circuit Pack— Duplicated PNC S-98
    - Switch Node Interface Manual Loop Back Procedure S-99
  - SNI-BD Hardware Error Log Entries and Test to Clear Values S-103
  - System Technician-Demanded Tests: Descriptions and Error Codes S-107
    - SNI Circuit Path Test (#755) S-108
    - SNI Off-board Destructive Facility Test (#756) S-120
    - SNI Destructive Facility Test (#757) S-123
    - Configuration Audit (#759) S-125
      - Incorrectly Connected Administered Fibers S-125
      - Incorrectly Connected Administered SNI-EI Fibers S-125
      - Incorrectly Connected Administered SNI-SNI Fibers between 3 Switch Nodes S-126
    - Switch Node Interface Reset Test (#761) S-146
    - Packet Neighbor Link Test (#767) S-150
    - Failure Audit (#777) S-161
    - Clear Firmware Counters (#982) S-163
    - SNI Fiber Out of Frame Query (#989) S-164
- SNI-PEER (SNI Peer Link) S-171

Contents

SNI-PEER Hardware Error Log Entries and Test to Clear Values S-172

System Technician-Demanded Tests: Descriptions and Error Codes S-176

- SPE-SELE (SPE Select Switch) S-177

Hardware Error Log Entries and Test to Clear Values S-179

- STBY-SPE (Standby SPE Maintenance) S-180

Standby Availability S-180

Locking the Active SPE S-181

Replacing SPE Circuit Packs S-183

Memory Shadowing S-183

Busyout of the Standby SPE S-183

Initialization: Bringing the Standby SPE Up S-184

Other Mechanisms: Status Command and SPE-Down Interface S-185

Recent Interchange Mode S-185

Resolving Error Conditions on the Standby SPE S-186

Resolving Handshake Failure S-187

Resolving Shadowing Failure S-189

Resolving Refresh Problems S-190

Delays in Refresh S-190
Failure of Refresh S-190

Resolving Poor Health S-191

Hardware Error Log Entries and Test to Clear Values S-193

System Technician-Demanded Tests: Descriptions and Error Codes S-197

Standby SPE Status Query Test (#855) S-198
Standby SPE Time-of-Day Comparison Test (#858) S-202
Standby SPE Handshake Test (#919) S-204
Standby SPE Configuration Matchup Test (#920) S-206

- STO-DATA (Stored Data) S-208

Data Inconsistencies and STO_DATA Tests S-209

Backing Up Data: MSS Commands S-210

File Inconsistencies: Causes S-212

Save commands S-212

Contents

Dirty Files S-212
Tape Replacement S-212
Inconsistent Files: Solutions S-213
Inconsistency across SPEs S-214
Disk on Active SPE Has Correct Boot Image: S-214
Tape on Active SPE Has Correct Boot Image: S-214
Hardware Error Log Entries and Test to Clear Values S-215
System Technician-Demanded Tests S-221
A Carrier and B Carrier Tape Checksum Tests (#829/#830) S-222
A and B Carrier Disk Checksum Tests (#831/#832) S-225
Test #833 (A Carrier) and #834 (B Carrier) Tape to Disk Consistency Tests S-228
Tape to Tape and Disk to Disk Consistency Tests (#835/#836) S-232

- STRAT-3 (Stratum 3 Clock) S-236
  - Stratum 3 Clock LED Strategy S-239
  - Hardware Error Log Entries and Test to Clear Values S-241
  - System Technician-Demanded Tests: Descriptions and Error Codes S-245
    - Stratum 3 Clock Alarm Query (#649) S-246
- SVC-SLOT (Service Slot) S-252
  - Hardware Error Log Entries and Test to Clear Values S-253
- SW-CTL (Switch Control) S-254
  - Hardware Error Log Entries and Test to Clear Values S-257
  - System Technician-Demanded Tests: Descriptions and Error Codes S-261
    - Switch Control Channel Interface Test (#92) S-262
    - Switch Control Reset Test (#93) S-266
    - Switch Control-Channel Transmission Test (#94) S-270
- SYNC (Synchronization) S-274
  - Stratum 4 Synchronization S-274

Contents

Stratum 3 Synchronization S-276

Synchronization in a Center Stage Switch Configuration S-278

Synchronization Troubleshooting S-279

Approach to Troubleshooting S-280

Troubleshooting Synchronization Problems S-282

Facility Fault Sectionalization S-290

Notes to Facility Fault Sectionalization Flowchart S-292

Timing Loops S-293

Synchronization Switches Away from the Current Timing Reference S-295

Tone-Clock Circuit Pack LEDs S-295

Hardware Error Log Entries and Test to Clear Values S-297

System Technician-Demanded Tests: Descriptions and Error Codes S-302

Test Synchronization Test (#417) S-303

- SYS-LINK (System Links) S-304

Recording System Link Events S-304

Identifying a System Link S-304

Display Errors/Alarms S-305

List sys-link S-305

Common Procedure for Repairing Link Problems S-305

Hardware Error Log Entries and Test to Clear Values S-306

System Technician-Demanded Tests: Descriptions and Error Codes S-308

System Link Status (#985) S-309

- SYS-PRNT (System Printer) S-310

Procedures for Restoring the System Printer Link S-310

Hardware Error Log Entries and Test to Clear Values S-312

System-Technician-Demanded Tests: Descriptions And Error Codes S-314

Link Tear Down Test (#213) S-315

Link Retry Test (#215) S-316

- SYSAM (Circuit Pack) S-317

Contents

Hardware Error Log Entries and Test to Clear Values S-318

System Technician-Demanded Tests: Descriptions and Error Codes S-320

SYSAM Reset Test (#909) S-321
SYSAM Dual Port RAM Test (#910) S-324
Sanity Handshake Test (#911) S-327
SYSAM Refresh Test (#912) S-330
Time-Of-Day Clock Test (#913) S-333
SYSAM G3-MT Loop Around Test (#915) S-336
SYSAM Outpulse Relay Test (#916) S-339
SYSAM Analog Loop Around Test (#917) S-343

■ SYSTEM (System) S-347

Hardware Error Log Entries and Test to Clear Values S-348

Notes for SYSTEM Error 605 AUX Data: S-352

T Maintenance Object Repair Procedures TAPE to TTR-LEV T-1

■ TAPE T-1

Description T-1

General Repair Procedures for TAPE T-3

Replacing a TAPE Cartridge T-5

Replacing the TAPE Circuit Pack T-6

For a Simplex SPE: T-6
For a Duplicated SPE: T-6

Hardware Error Log Entries and Test to Clear Values T-7

System Technician-Demanded Tests: Descriptions and Error Codes T-12

Tape Reset Test (#809 and #894) T-13
Tape Write-Read Test (#810) T-18
Tape Audit Test (#811) T-23
Tape Firmware Error Counters Read and Clear Test (#812) T-27
Tape Diagnostic Test (#813) T-34
Tape Loop-around Tests (#814) T-38
Tape Status Test (#815) T-43

Contents

Tape Reset Test (#894) T-47
Tape Drive Head Cleaning Procedure T-47
■ TDM-BUS (TDM Bus) T-58
TDM Bus Fault Detection and Isolation T-58
Procedure 1 T-59
Procedure 2 T-60
Procedure 3 T-61
Procedure for PPN with Simplex SPE or EPN with Simplex PNC T-62
Procedure for PPN with Duplicated SPE or EPN with Duplicated PNC T-63
Part 1 (PPN Procedure) T-63
Part 2 (EPN Procedure) T-63
Part 3 T-64
Part 4 T-64
Procedure 4 T-65
Part 1 T-66
Processor Port Network: T-67
Expansion Port Networks: T-67
Restarting Non-functioning Port Circuit Packs T-68
Procedure 1 (Non-destructive) T-68
Procedure 2 (Non-Destructive) T-68
Procedure 3 (Destructive) T-69
Procedure 4 (Destructive) T-69
Hardware Error Log Entries and Test to Clear Values T-70
Technician-Demanded Tests: Descriptions and Error Codes T-72
Idle Time Slot Test on TDM Bus A or B (#294) T-73
Control Channel Test (#296) T-75
Digit Detection Test (#297) T-77
■ TDM-CLK (TDM Bus Clock) T-78
Hardware Error Log Entries and Test to Clear Values T-80
System Technician-Demanded Tests: Descriptions and Error Codes T-85
TDM Bus Clock Circuit Status Inquiry Test (#148) T-87

Contents

TDM Bus Clock Slip Inquiry Test (#149) T-90
TDM Bus Clock PPM Inquiry Test (#150) T-92
TDM Bus Clock Parameter Update Test (#151) T-94
Board Type Check Test (#574) T-95
Standby Reference Health Check Test (#651) T-96

- TDMODULE (Trunk Data Module) T-98
- TIE-BD (Tie Trunk Circuit Pack) T-99
- TIE-DS1 (DS1 Tie Trunk) T-100

Hardware Error Log Entries and Test to Clear Values T-102

System Technician-Demanded Tests: Descriptions and Error Codes T-106

NPE Crosstalk Test (#6) T-107
Conference Circuit Test (#7) T-110
Port Audit and Update Test (#36) T-112
DS1 Tie Trunk Seizure Test (#136) T-113

- TIE-TRK (Analog Tie Trunk) T-117

Hardware Error Log Entries and Test to Clear Values T-119

System Technician-Demanded Tests: Descriptions and Error Codes T-123

NPE Crosstalk Test (#6) T-124
Loop Around and Conference Circuit Test (#33) T-127
Audit Update Test (#36) T-132
Tie Trunk Seizure Test (#73) and Tie Trunk Dial Test (#747) T-134
Tie Trunk EPF Test (#74) T-137
Transmission Test (#844-848) T-140

- TIME-DAY (Time of Day) T-146

Hardware Error Log Entries and Test to Clear Values T-147

- TONE-BD (Tone-Clock Circuit Pack) T-148

Tone-Clock Circuit Packs and System Reliability Options T-148

Standard Reliability Option T-148
High Reliability Option T-149
Critical Reliability Option T-149

Tone-Clock Interchange Strategy T-149

Manual PPN Tone-Clock Interchange T-149
Manual EPN Tone-Clock Interchange T-150
Software Maintenance Interchange T-151

Contents

International Settings [G3r V2] T-151

How to Replace the Tone-Clock Circuit Pack T-152

Port Networks with a Single Tone-Clock Circuit Pack: T-153

Port Networks with Two Tone-Clock Circuit Packs: T-154

Hardware Error Log Entries and Test to Clear Values T-158

System Technician-Demanded Tests: Descriptions and Error Codes T-164

Clock Health Inquiry Test (#46) T-166

- TONE-PT (Tone Generator) T-168

Hardware Error Log Entries and Test to Clear Values T-169

System Technician-Demanded Tests: Descriptions and Error Codes T-172

Tone Generator Transmission Test (#40) T-173

Tone Generator Update/Audit Test (#41) T-178

Tone Generator Crosstalk Test (#90) T-179

- TSC-ADM (Administered Temporary Signaling Connections) T-181

Hardware Error Log Entries and Test to Clear Values T-183

System Technician-Demanded Tests: Descriptions and Error Codes T-184

TSC Heartbeat Inquiry Test (#604) T-185

- TTR-LEV (TTR Level) T-190

Repair Procedure for TTR-LEV T-191

Hardware Error Log Entries and Test to Clear Values T-193

U **Maintenance Object Repair Procedures UDS1-BD** U-1

- UDS1-BD (UDS1 Interface Circuit Pack) U-1

Circuit Pack Administration and Options U-4

Contents

Hardware Error Log Entries and Test to Clear Values U-7

System Technician-Demanded Tests: Descriptions and Error Codes U-16

NPE Connection Audit Test (#50) U-18
Control Channel Loop Around Test (#52) U-19
SAKI Sanity Test (#53) U-20
Internal Loop Around Test (#135) U-22
Loss of Signal Alarm Inquiry Test (#138) U-27
Blue Alarm Inquiry Test (#139) U-36

Line Loopback Alarm U-36

Payload Loopback Alarm U-36

Red Alarm Inquiry Test (#140) U-38

Loss of Multiframe Alarm U-38

Yellow Alarm Inquiry Test (#141) U-41

Remote Multiframe Alarm U-41

Yellow F5 Fault Alarm U-41

Major Alarm Inquiry Test (#142) U-44
Minor Alarm Inquiry Test (#143) U-47
Slip Alarm Inquiry Test (#144) U-50
Misframe Alarm Inquiry Test (#145) U-53
Translation Update Test (#146) U-56
DS1 Board Loopback Test (#1209) U-57
CSU Equipment Loopback Test (#1210) U-60
CSU Repeater Loopback Test (#1211) U-65
CPE Loopback Jack Test (#1212) U-69
Far CSU Loopback Test (#1213) U-73
One-Way Span Test (#1214) U-77
Inject Single Bit Error Test (#1215) U-80
End Loopback/Span Test (#1216) U-82
ICSU Status LEDs Test (#1227) U-85

W Maintenance Object Repair Procedures WAE-PORT W-1

- WAE-PORT (Wideband Access Endpoint Port) W-1

Hardware Error Log Entries and Test to Clear Values W-3

Contents

System Technician-Demanded Tests: Descriptions and Error Codes W-5

NPE Crosstalk Test (#6) W-6

Conference Circuit Test (#7) W-9

Port Audit and Update Test (#36) W-11

X **Maintenance Object Repair Procedures XXX-BD** X-1

- XXX-BD (Common Port Circuit Pack) X-1

Hardware Error Log Entries and Test to Clear Values X-5

System Technician-Demanded Tests: Descriptions and Error Codes X-8

NPE Audit Test (#50) X-9
Ringing Application Test (#51) X-10
Control Channel Loop Around Test (#52) X-13
SAKI Sanity Test (#53) X-15
Neon Test (#220) X-17

AA **References** AA-1

- Basic AA-1
- Call Center AA-5
- Networks AA-6
- Application Specific AA-7

ABB **Abbreviations** ABB-1

IN **Index** IN-1

Contents

About This Document

This document provides instructions and supporting information needed to monitor, test, and maintain the hardware components of the DEFINITY Communications System Generic 3r. This system's extensive background testing and battery of technician-demanded tests allow many problems to be addressed before they severely disrupt call processing. Duplication options further enhance this reliability, giving the Generic 3r technician an opportunity to provide a high level of service while resolving problems or performing routine maintenance. This book provides the necessary information to make full use of these capabilities and introduces some new components and strategies found in Generic 3r.

Safety Precautions

Before working on a system, the technician must be thoroughly familiar with the precautions and practices described at the beginning of Chapter 5, "Responding to Alarms and Errors".

Intended Use

- As a guide to diagnosing and repairing the G3r switch for use by field technicians, remote service personnel, and user-assigned maintenance personnel
- As a training manual for teaching technicians how to maintain the system
- As a reference source on the system's maintenance capabilities

This document assumes that the technician has a working knowledge of telecommunications fundamentals and PBX maintenance practices. This document also assumes that the system was initially installed and tested

properly and brought into service with all faults cleared. Adjuncts and other devices external to the switch are covered by their own service documentation.

How to Use this Document

Most maintenance sessions involve analyzing the Alarm and Error Logs to diagnose a trouble source and replacing a component such as a circuit pack. The information in Chapter 9, "Maintenance Object Repair Procedures" will generally suffice to address these needs. The table at the beginning of the chapter gives a hierarchy of alarms that will help to determine where to start when multiple faults are present. Certain complex elements of the system, such as fiber links and the packet bus, require a more comprehensive approach. Special procedures for these elements appear in Chapter 5, "Responding to Alarms and Errors". You will also find there certain basic procedures such as how to replace each type of circuit pack.

This manual is not intended to solve all levels of trouble. When the limits of these procedures have been reached and the problem has not been resolved, it is the technician's responsibility to escalate to a higher level of technical support. Escalation should conform to the procedures in the *Technical and Administration Plan*.

Organization

- Chapter 1, "Maintenance Architecture" describes the system's design and maintenance strategy.
- Chapter 2, "Hardware Configurations" shows the locations and arrangements of the system's cabinets, carriers, circuit packs, and cabling.
- Chapter 3, "Generic 3 Management Terminal" *(G3-MT)*, describes how to set up and use the management terminal.
- Chapter 4, "Initialization and Recovery" describes the various reset and reboot processes and how these are used to perform maintenance and recover systems or subsystems that are out of service. Use of the G3-MT SPE-down interface on non-functional or standby Switch Processor Elements is included here.
- Chapter 5, "Responding to Alarms and Errors" describes general repair procedures such as replacing circuit packs and special troubleshooting procedures such as those for fiber link and packet bus faults. Repair procedures for specific Maintenance Objects are covered in Chapter 9, "Maintenance Object Repair Procedures".
- Chapter 6, "Additional Maintenance Procedures" describes preventive maintenance, software updates and other procedures not associated with specific alarms or components.

- Chapter 7, "LED Indicators" is a guide to interpreting indications given by circuit pack and attendant console LEDs.
- Chapter 8, "Maintenance Commands" contains a description of each maintenance command available through the G3-MT. The commands are ordered alphabetically. A general description of command syntax and conventions appears at the beginning of the chapter.
- Chapter 9, "Maintenance Object Repair Procedures" contains specific troubleshooting and repair instructions for every component in the system. The maintenance objects are listed alphabetically by name as they appear in the Alarm and Error Logs. Under each maintenance object appears a description of the object's function, tables for interpreting alarm and error logs, and instructions on how to use tests, commands, and replacements to resolve associated problems. Most of these procedures are complete and self-contained, while others rely upon procedures in Chapter 5, "Responding to Alarms and Errors".
- The Abbreviations section contains a list of all acronyms and abbreviations used in the book.

Volume 1 contains Chapters 1 through 8 and those maintenance objects of Chapter 9, "Maintenance Object Repair Procedures" that begin with letters A through C. Volume 2 contains those maintenance objects of Chapter 9 that begin with letters D through O. Volume 3 contains those maintenance objects of Chapter 9 with the letters P through X and the Abbreviations section. The full Table of Contents, About This Document, Appendix AA, "References" and the cross-referenced Index appear in all three volumes. Note that the pages of Chapter 9 are numbered A-1, B-1, and so on, with the letter designating the first letter of the maintenance objects on those pages.

References

The following documents contain information necessary for maintaining the Generic 3r system:

- *DEFINITY Communications System Generic 3 V2 Traffic Reports*, 555-230-511

  Explains how to obtain and interpret traffic measurement reports generated by the switch. This book is useful to the technician in evaluating system performance and diagnosing problems such as poor trunk transmission, processor overload, and so on.

- *DEFINITY Communications System Generic 3 System Description and Specifications,* 555-230-206

  A high-level overview of the various Generic configurations available. This book is useful to the technician in gaining an overall perspective, finding out various capacities and standards, and discerning differences between the various Generic configurations.

- *DEFINITY Communications System Generic 1 and Generic 3 Installation and Test,* 555-230-104

  Provides complete instructions for installing and initializing the system. This book is useful to the technician in making both internal and external connections to switch components. Topics include wiring to the network, power supplies, intercabinet connections and so on.

- *DEFINITY Communications System Generic 3 V2 Implementation,* 555-230-653

  The system technician's duties often require coordination with the system manager or administrator, as well as a knowledge of administration commands and procedures. The above book provides this information.

- *DEFINITY Communications System Generic 3 Feature Description,* 555-230-204

  This book is useful to the technician in gaining an understanding of how the system's features work and in identifying interactions between features.

- *DEFINITY AUDIX System Maintenance*, 585-300-110

  Complete instructions for maintaining the TN2169 and TN566 AUDIX circuit packs.

- *DEFINITY Communications System Generic 2.2 and Generic 3 V2 DS1/CEPT/ISDN-PRI Reference*, 555-025-107

- *DEFINITY Communications System Generic 3 V2 Wideband Technical Reference,* 555-230-230

Maintenance Architecture

1

The maintenance subsystem is that part of the software that is responsible for initializing and maintaining the system. This software continuously monitors system health and maintains a record of errors detected in the system. The maintenance subsystem also provides a user interface for on-demand testing.

This chapter provides a brief description of the G3r maintenance strategy, and presents background information on the system's overall functions. For detailed descriptions of components and subsystems, refer to related topics in Chapter 9, "Maintenance Object Repair Procedures". Sections on the following MOs are particularly useful for gaining an understanding of how the system works:

- STBY-SPE
- PNC-DUP
- EXP-PN
- SNI-BD
- DUP-INT
- SYNC

Maintenance Objects

The system is partitioned into separate entities called maintenance objects (MOs). Each MO is monitored by the system and has its own maintenance strategy. Most MOs are individual circuit packs such as the processor circuit pack (PROC) and expansion interface circuit pack (EXP-INTF). Some are hardware components that reside on part of a circuit pack. For example, the TDM bus clock (TDM-CLK) and tone generator (TONE-PT) circuits reside on the tone/clock circuit pack (TONE-BD). Others represent larger subsystems or sets of monitors, such as expansion port network (EXP-PN) and cabinet

environmental sensors (CABINET). Finally, some MOs represent processes or combinations of processes and hardware, such as synchronization (SYNC) and duplicated port network connectivity (PNC-DUP). The above abbreviations are *maintenance names* as recorded in the error and alarm logs. Individual copies of a given MO are further distinguished with an address that defines its physical location in the system. These addresses are described in Chapter 8, "Maintenance Commands". Repair instructions and a description of each MO appear alphabetically in Chapter 9, "Maintenance Object Repair Procedures". See the Table of Contents for a list of all MOs.

Alarm and Error Reporting

During normal operations, software, hardware or firmware may detect error conditions related to specific MOs. The system attempts to fix or circumvent these problems automatically, but if a hardware component incurs too many errors, an alarm will be raised. Typically, the following sequence takes place in generating an alarm:

1. An error occurs on an MO during testing or normal operations.
2. The component sends an uplink control channel message to maintenance software notifying it of the error. Errors are detected in two ways:
   - For in-line errors, firmware on the component detects the occurrence of an error during ongoing operations.
   - For other types of errors, a *periodic test* or a *scheduled test* executed by software detects the error. These tests run at regular intervals administered by the **change system-parameters maintenance** command. The technician can also run these tests on demand by using the maintenance commands described in Chapter 8, "Maintenance Commands" and Chapter 9, "Maintenance Object Repair Procedures".
3. System software logs the error in the error log and increments the error counter for that error. Whenever an error counter is *active* (greater than zero), a maintenance record is maintained for the MO. A routine based on the strategy for maintaining that component is queued and run when resources are available.
   - For some error types, the routine executes further tests, called *analysis tests* on the component. Error counters associated with the tests are incremented or decremented based on success or failure of these tests. If all tests pass, the maintenance record is retired.
   - In-line error counters are generally not associated with any specific test. These counters are automatically decremented over time at a rate specific to the error type. If the error occurs at a rate lower than the leak rate, the count for that error will gradually decrease. If the error does not recur for a while, the counter drops to zero and that maintenance record is retired. This is called the *leaky bucket* mechanism. Counters can also be cleared by the commands **test**

long clear and, for SNI, SNC, and DS1C circuit packs, **clear firmware counters**. Doing so, however, does not address the problem that caused the errors.

4. When a counter exceeds its specific threshold value, an alarm is raised. Most alarms are raised by specific test failures.
   - — The alarm is logged in the alarm log. The active hardware error Log entries and the alarm Log entries against a particular MO are not cleared from the logs until all the problems causing the alarms have been resolved.
   - — Alarm LED indicators are lit on the component, the SYSAM circuit pack, and on the EPN maintenance circuit packs.
   - — For Major and Minor alarms, a notification call is made via the SYSAM-RMT port to a remote maintenance location (INADS).
   - — The alarm remains active until the problem is resolved. Further testing with no failures, no further errors over a period of time, or repair actions can resolve an alarm.

Alarm and Error Logs

The system keeps a record of every alarm detected in the system. This record, the alarm log, and the error log, can be displayed locally on the G3-MT or remotely by Initialization and Administration System (INADS) personnel. An alarm is classified as MAJOR, MINOR, or WARNING, depending on its effect on system operation. Alarms are also classified as ON-BOARD or OFF-BOARD.

- MAJOR alarms identify failures that cause critical degradation of service and require immediate attention. On High and Critical Reliability systems, MAJOR alarms can occur on standby components without affecting service since their active counterparts continue to function.
- MINOR alarms identify failures that cause some service degradation but do not render a crucial portion of the system inoperable. The condition requires attention, but typically a a MINOR alarm affects only a few trunks or stations, or a single feature.
- WARNING alarms identify failures that cause no significant degradation of service or failures of equipment external to the switch. These are not reported to INADS or the attendant console.
- ON-BOARD problems originate in circuitry on the alarmed circuit pack.
- OFF-BOARD problems originate in a process or component external to the circuit pack.

Multiple alarms against a given MO can change the level of a given alarm as it appears in the alarm log. If there is an active error against an MO that causes a MINOR alarm and an active error that causes a MAJOR alarm, then the alarm log would show two MAJOR alarms. If the MINOR alarm problem is resolved first, the error is still marked as alarmed until the MAJOR alarm problem is resolved, and

the alarm log would still show two MAJOR alarms. If the MAJOR alarm problem is resolved first, the error is still marked as alarmed until the MINOR alarm problem is resolved and the alarm log would now show two MINOR alarms. Similarly, the presence of an ON-BOARD alarm will cause all alarms against that MO to report as ON-BOARD.

NOTE:
To determine the actual level and origin of each alarm when there are more than one against the same MO, you must consult the *Hardware Error Log Entries* table for that MO.

The alarm log is restricted in size. If the log is full, a new entry overwrites the oldest resolved alarm. If there are no resolved alarms, the oldest error (which is not alarmed) is overwritten. If the log consists of only active alarms, the new alarm is dropped.

Usually, repair sessions begin with an examination of the alarm and error logs. Instructions on how to display and interpret the logs appear in Chapter 8, "Maintenance Commands" under **display alarms** and **display errors**.

INADS Alarm Reporting

All Major and Minor alarms and some downgraded Warning alarms are reported to INADS. (Some classes of alarms can be downgraded to lower levels by INADS at the customer's request). When the system raises one of these alarms, an attempt is made to call INADS. If the call to INADS fails for whatever reason, the call is retried in 7 minutes. This is repeated until four attempts have been made in a period of approximately 21 to 30 minutes. If all four attempts fail, the system waits one hour. Then it starts over again with 4 call attempts spaced 7 minutes apart. This cycle repeats until either the call to INADS successfully completes, or until the whole cycle is repeated six times. If, at any time during this scenario, a new alarm is raised by the system that should be reported to INADS, all timers and counts are reset and the strategy is repeated from the very beginning.

During the four call attempts, the ACK lamp on the attendant console is turned off. Approximately 15 minutes into the hour interval between call attempts, the ACK lamp flashes, indicating the system is having trouble reporting alarms to INADS. At the end of the entire scenario described above, if the system could not report the alarm to INADS, the ACK lamp continues to flash.

Port Network Connectivity (PNC)

Port network connectivity is the equipment and controlling software that allows building large systems comprised of multiple Port Networks (PNs). Each PN is composed of time division multiplexed (TDM) and packet (PKT) busses, and the port circuit packs connecting to them. (The terms LAN bus and PKT bus are

interchangeable on the G3r. This book uses the term PKT bus, but "LAN" appears marked on some hardware components.) A multicarrier cabinet can contain more than one PN.

This section describes the hardware, software and firmware components that support the PNC. Knowledge of the service and maintenance functions of these components will aid in diagnosing and resolving troubles. Troubleshooting techniques for general PNC components such as busses appear in Chapter 6, "Additional Maintenance Procedures". Procedures for specific maintenance objects discussed here appear in Chapter 9, "Maintenance Object Repair Procedures".

PNC Configurations

The PNC is provided in one of two different configurations: Direct Connect and Center Stage Switch (CSS). In either configuration the TN570 Expansion Interface (EI) board provides the interface to the data on the TDM/PKT busses. In the direct connect configuration up to 3 PNs are connected via hardware between each pair of PN EIs as illustrated below.

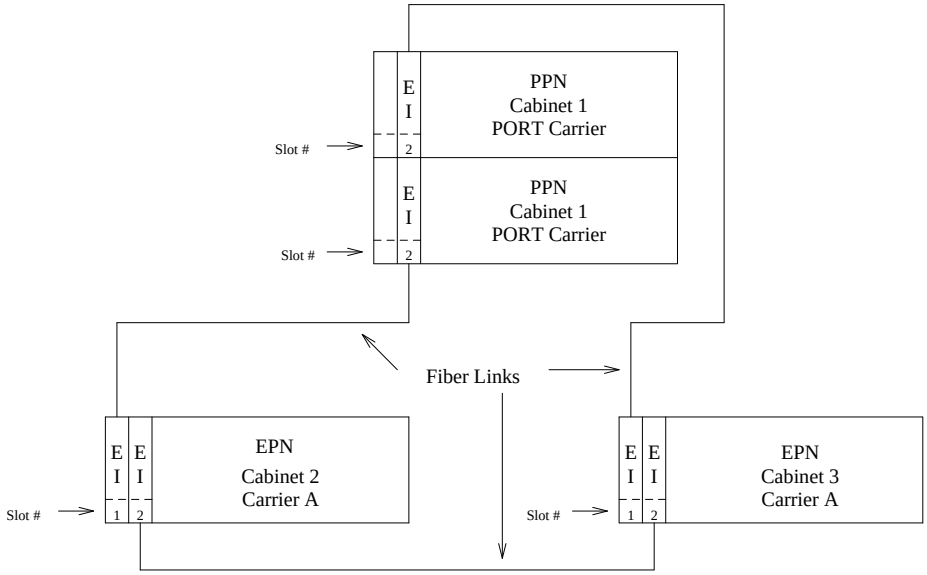

Figure 1-1. Direct Connect PNC

In the CSS configuration up to 16 PNs (including the PPN) can be connected to one switch node (SN). With two SNs, up to 22 PNs can be connected. Each SN consists of a carrier containing the following components (in Critical Reliability systems, each SN is duplicated on a second, identically configured carrier):

- 1 to 16 switch node interface (SNI) circuit packs (TN573)

  Each SNI serves as the interface for TDM/PKT data to and from its associated PN EI or to and from an SNI in the other switch node.

- 1 or 2 switch node clock (SNC) circuit packs (TN572)

  The SNCs provide timing for bit synchronized switching among the SNIs.

- Two power units

  Each power unit provides +5V to the circuit packs in its half of the SN and to both SNCs.

- Optionally in the PPN only, one Expansion Interface

- Optionally, 1 or 2 DS1 converter (DS1C) circuit packs

  The DS1C circuit packs allow PNs to be located remotely up to 100 miles between the two most distant PNs. The DS1Cs provide DS1 facility transport for a subset of the fiber timeslots between EIs in a direct connect system, or between EIs and SNIs in CSS configurations. They can also be located on port carriers.

- TDM and PKT busses, and bus terminations

  There are 16 data busses in the SN. Each SNI has a slot dependent data bus on which it transmits data and has 16 inputs, one for each SN SNI slot, including its own. The data busses are terminated via 4 AHF105 paddle boards that mount on the backside of the backplane slots 2 and 20.

- Power distribution and control leads

Figure 1-2 shows two examples of CSS configurations. Illustrations of the switch node carrier hardware appear in Chapter 2, "Hardware Configurations".

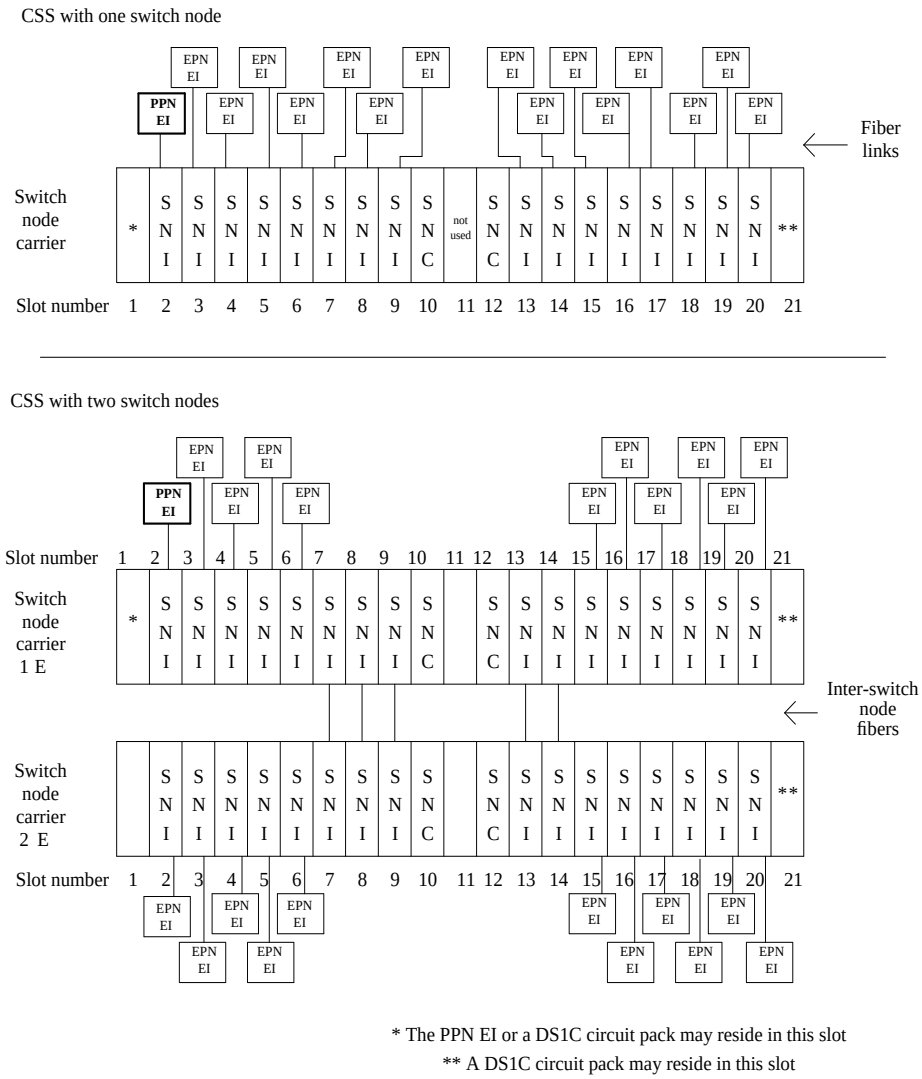

Figure 1-2. Center Stage Switch Configurations (Simplex Examples)

SPE Duplication

The Switch Processing Element (SPE) consists of the following circuit packs.

Table 1-1. SPE Circuit Packs and Maintenance Objects

Circuit Pack Code	Circuit Pack Name	Associated Maintenance Objects
TN1648	System Access and Maintenance	SYSAM
UN330B	Duplication Interface	DUPINT, DUP-CHL
UN331B	Processor	PROCR
TN1650B	Memory	MEM-BD
TN1655	Packet	PKT-INT
UN332	Mass Storage System/ Network Control (MSSNET)	H-ADAPTR, SW-CTL
TN1657	Disk Drive	DISK
TN1656	Tape Drive	TAPE STBY-SPE* STO-DATA*

The above circuit packs reside on the A circuit pack carrier (control carrier) of the PPN in all systems, except for the UN330B which is found only in High and Critical Reliability systems. In High and Critical Reliability systems, the PPN B carrier duplicates exactly the configuration of the A carrier, making two identical SPE complexes. This duplication allows the system to recover from many faults, and enables the technician to troubleshoot and repair SPE components without interrupting service.

The Tone-Clock circuit pack also resides on the control carrier, and is also duplicated. However, it is not considered a part of the SPE. Although the SPE-Select switches control Tone-Clock selection, its duplication strategy differs from that of the SPE. See the TDM-CLK and TONE-BD sections in Chapter 9, "Maintenance Object Repair Procedures" for details.

Duplicated SPEs employ an active/standby strategy. At any one time, one SPE, A or B, is designated active and fully controls the switch services network. The other SPE, designated standby, is not required for switch service but remains ready to become active and resume control of service should a service-affecting failure occur in the active SPE. This action is termed an SPE interchange. It is

important that the standby SPE be kept as available as possible to allow for a speedy, minimally disruptive interchange.

Standby SPE Availability

The STBY-SPE maintenance object is responsible for testing of the standby SPE so that any faults that would prevent it from being available for service can be isolated and repaired. Various factors affect the availability of the standby SPE:

- The condition of the individual hardware components of the standby SPE, including circuit packs, power supplies, cables and other supporting components

  Loss of power in an SPE due to power supply or power delivery components is discussed under the condition SPE-Down. If a circuit pack in the standby SPE that is critical to call service has failed, the standby will not be able to become active. Maintenance testing of the standby SPE allows isolation and repair of component problems so that the standby can be made available again.

- Standby memory content

  Each write operation in active memory is shadowed to the corresponding location in the standby SPE's memory. The standby memory should be in agreement with the active in order to support an interchange that will preserve call, feature and translation information. Maintenance software tracking the STBY-SPE MO aims to keep the two memories in agreement.

- Standby State-of-Health (SOH)

  The Duplication Interface circuit packs maintain a state-of-health value which reflects the availability of the standby SPE. If the Standby SPE's state-of-health level is too poor, it cannot automatically be interchanged into (made active).

- Standby SPE-Down

  If the standby SPE is completely dead and held reset by its SYSAM (in SPE-Down), or the standby SPE has no power, it is unavailable for service.

- System Time-of-Day

  If the Time-of-Day clock of the standby SPE is substantially out of synch with the active, interchanges could be more disruptive to service than desirable.

System software running on both active and standby SPEs attempts to assure that the standby SPE is kept fully available in terms of the above factors. The health of both the active and standby is tracked as a State-of-Health (SOH) value.

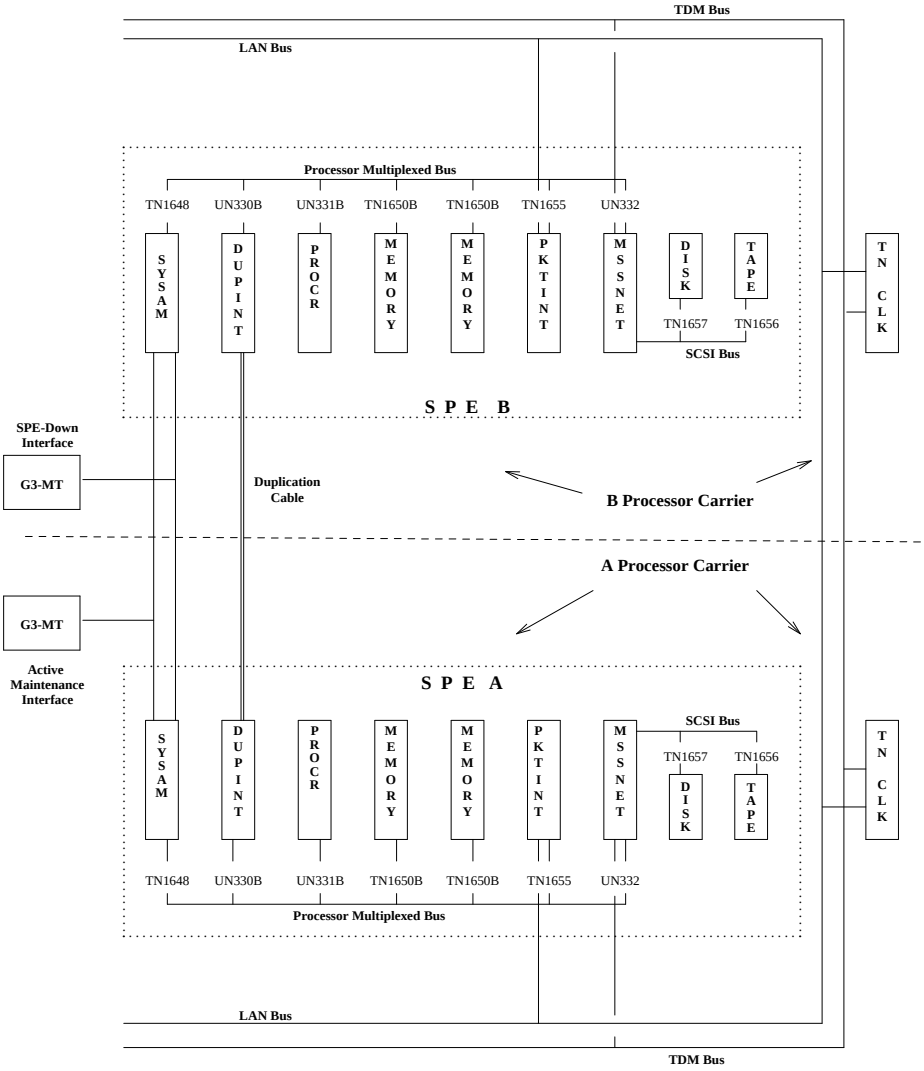

Figure 1-3. Duplicated SPEs — Hardware Configuration

Standby SPE State of Health

The Duplication Interface circuit packs on each of the two SPEs keep track of the State of Health (SOH) of each of the two SPEs. This circuitry assures that, at any time, unless the SPE-select switches are locked:

- If the two SPEs have the same SOH, the current active SPE remains active.
- If the two SPEs have different SOH, the SPE with the better SOH becomes or remains the active SPE.

These descriptions apply to state of health levels *on the standby SPE.* Four possible levels of SPE SOH are supported and maintained by system hardware and software.

functional	The standby SPE is fully healthy with up-to-date memory content identical to active SPE memory content. An interchange into this SPE will cause minimal service disruption.
not refreshed	The standby SPE's hardware and operational software are fully healthy but the standby memory content is not currently identical to active SPE memory content. Typically either memory shadowing is off or a memory refresh operation is in progress to bring the memories' contents into agreement. Interchange into an SPE of this health level will lead to calls dropping and a service outage of several minutes.
partially-functional	One of the following conditions is in effect: — A failure of a critical standby SPE component has occurred. — The standby SPE has been busied out. — The SPE is in recent interchange mode (see STBY-SPE in Chapter 9, "Maintenance Object Repair Procedures").
non-functional	This is the worst and most seriously disabled state of a standby SPE. The SPE has lost either power or basic sanity; the standby processor and its software are unable to cycle. Such an SPE cannot be made active by an interchange.

Standby SPE Maintenance Architecture

The maintenance strategy for the standby SPE is based on several independent components.

- Maintenance of handshake communication so that software on the active SPE can control maintenance of the standby SPE and its components.
- Controlling memory shadowing and performing the standby memory refresh operation.
- Activities, independent of handshake communication and memory shadowing, used to allow tracking of the standby SPE's condition. This primarily includes reading of hardware status to determine the actual state of standby SPE.

As illustrated below, all maintenance capabilities for the standby SPE are built upon these three.

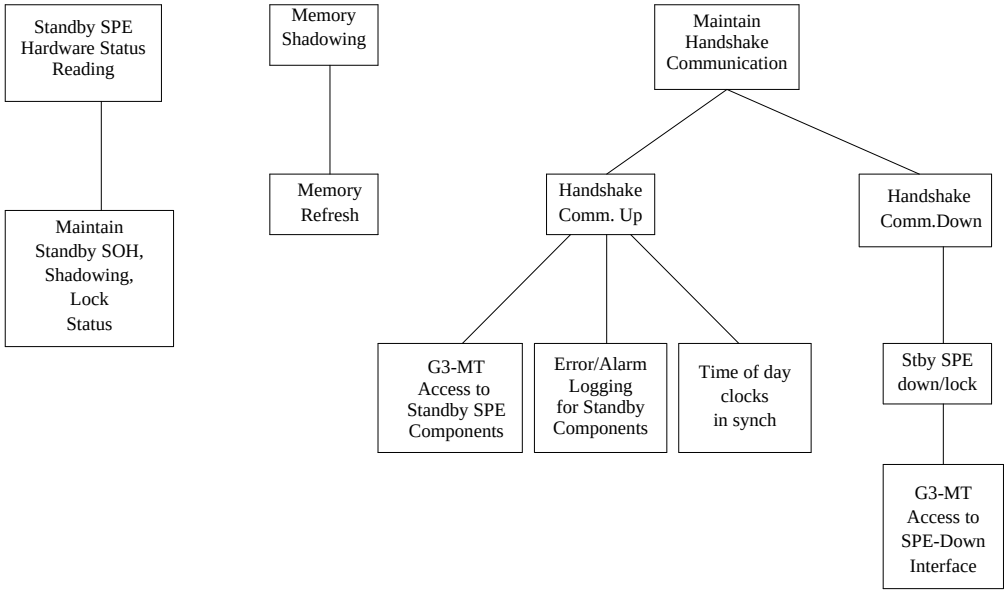

Figure 1-4. Components of Standby Maintenance

Standby SPE maintenance software is designed to attempt to self-correct problems; when problems occur, this software automatically tries to address the problems, bring the standby SPE back to a state of availability and clear all alarms which might have been raised. Typically, if a standby SPE problem has not cleared, it is of a hardware nature and some type of hardware component maintenance or replacement action will be indicated and necessary. Once such corrections have been made, the system software will automatically bring the standby back to full availability. There is no G3-MT command to stimulate refresh of standby SPE memory; system software automatically accomplishes this itself when conditions are appropriate. The same is true of efforts to turn on shadowing where no explicit user interface command to turn on/off shadowing is available

(note that busyout/release, as described below, can be used to indirectly accomplish this).

Standby Maintenance Monitor Software

The Standby Maintenance Monitor (SMM) is a software package that is *always* running on key components of the standby SPE to verify its competence. SMM test individual standby SPE components and reports back to the active SPE, via the handshake message, any failures of individual tests. Failure reports trigger enhanced maintenance attention to standby SPE component problems by active SPE software. SMM also assures that when handshake communication has been down for an extended period, the standby SPE will transition into the SPE-down state.

Handshake Communication

Every 30 seconds, the active SPE sends a handshake request message to SMM and waits for SMM to respond with a handshake response message. This message transmission occurs across the Duplication Interface circuit packs and their interconnecting cable. As long as SMM responds to these regular handshake request messages, handshake communication is considered *up* as reported on the **status spe** screen.

The physical path of handshake communication is illustrated below. Hardware problems at any point in this route could interfere with handshake communication. If the standby SPE fails to respond to four successive handshake requests, handshake communication is considered down. A major alarm is logged against STBY-SPE with error type 1 logged. The **status spe** screen will indicate that handshake is down. It is then no longer possible to communicate with the standby SPE. Maintenance testing of the standby by the active SPE (or by command) is discontinued, and the error and alarm logs become outdated for standby components.

Handshake communication failure is a severe and rare condition. It is due to either a failure of Duplication Interface hardware or a catastrophic failure of the standby SPE. As long as the active SPE is not locked by the switches, software attempts every 30 seconds, to re-establish handshake communication.

When the SPEs are locked with the switches, handshake communication is physically impossible, but no alarm is raised. When the standby is busied out, handshake communication should remain up, but in any case, only the busyout WARNING alarm will be raised.

Whenever the active SPE has undergone a restart (levels 1-5), handshake is technically considered down during and just after the restart. After a level 1 (hot) restart, if there are no standby SPE problems, handshake communication should be restored within 30 seconds of G3-MT login is re-enabled. After active-SPE

restarts of levels 2 and up, handshake should be restored within 3 minutes of G3-MT re-enabling.

The active SPE keeps hardware configuration and vintage data about the components of the standby SPE. This data can be accessed with **list configuration control**. Whenever handshake is down, this data may be out of date. Whenever handshake has been down and is restored, the active SPE requests standby SPE software to transmit the current version of this hardware configuration and vintage data. The data is then stored in active SPE memory. Failure to use the lock-and-power-down method for standby circuit pack replacement (see Chapter 5, "Responding to Alarms and Errors") can lead to incorrect standby component hardware configuration and vintage data.

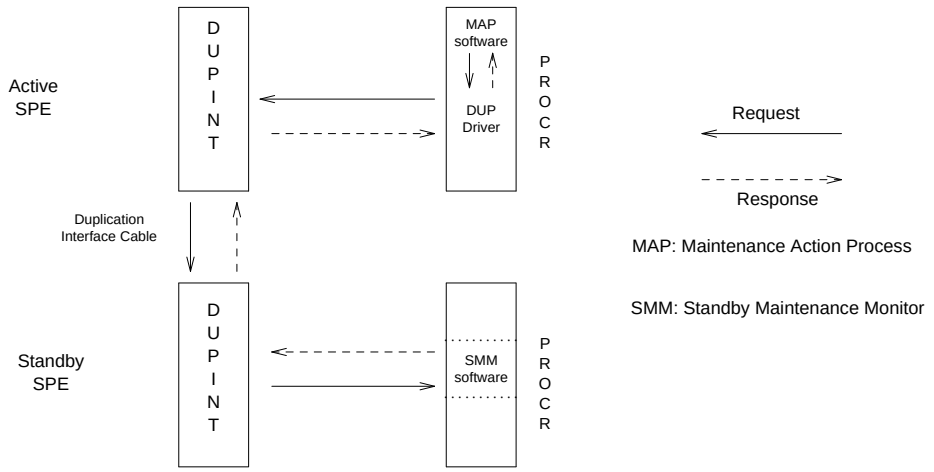

Figure 1-5. Handshake Communication Path

Maintenance of Standby Components

When handshake communication is up, maintenance for individual components of the standby SPE is the same as that for the active (except in some details for PKT-INT). The same commands are used to test standby and active circuit packs, and the error and alarm logs maintained on the active side record data for both. The documentation for individual maintenance objects in Chapter 9, "Maintenance Object Repair Procedures" applies to both.

If a major on-board alarm is raised against a standby SYSAM, Processor, Memory, MSSNET, or Packet Interface circuit pack, the standby SPE's SOH will be lowered to *partially-functional*. Once that circuit pack's problem has been fixed and the alarm cleared, (if there is no other component failure on the

standby), System software will automatically raise the standby SPE's SOH to *not-refreshed* or *functional*, depending on whether its memory is up to date.

Standby component faults can also affect memory shadowing. Certain faults can have negative effects on system operation if memory shadowing is left on. When these components get major alarms, memory shadowing is automatically kept off by system software. These are referred to as *shadowing relevant* components. Roughly, these include the hardware that provide shadowing or the hardware into which shadowed writes occur.

Table 1-2 below shows the effect often major on-board alarms against standby components on standby SOH and on memory shadowing. Note that off-board alarms, minor alarms and warning alarms have no effect on memory shadowing or on the SOH of the standby SPE.

Table 1-2. Effects of Major Alarms on Shadowing and Standby SOH

Alarmed Component	SOH Effect	Shadowing Effect
PROCR	partially functional	no effect
MEM-BRD	partially functional	shadowing kept off
SW-CTL	partially functional	shadowing kept off
SYSAM	partially functional	no effect
PKT-INT	partially functional	shadowing kept off
DUPINT	no effect	shadowing kept off
DUP-CHL	no effect	shadowing kept off
HOST-ADAPTER	no effect	no effect
DISK	no effect	no effect
TAPE	no effect	no effect

When handshake communication is down, but the standby SPE is not in SPE-down mode (SOH is not *nonfunctional*), autonomous testing of standby SPE components by the SMM occurs on the standby SPE. If a component fails a test *while handshake is down,* its red LED is lit and the standby SOH is lowered to *partially-functional.*

A standby SPE component is considered to be G3-MT-testable if it can be tested with the usual maintenance commands from a G3-MT connected to an ACTIVE connector on the SPE. In this condition, full maintenance software for it is running in the active SPE and the error/alarm data for it is up to date. Table 1-3 gives

testability requirements for the various SPE components. Further details for each component appear in Chapter 9, "Maintenance Object Repair Procedures".

Table 1-3. Testability Requirements for Standby Components

Component	Required Condition
PROCR	handshake up
MEM-BD	handshake up
SW-CTL	handshake up
SYSAM	handshake up
PKT-INT	handshake up and Stby Refreshed
DUPINT	handshake up
DUP-CHL	handshake up
HOST-ADAPTER	handshake up
DISK	handshake up and Stby Refreshed
TAPE	handshake up and Stby Refreshed

Locking the Active SPE

Duplication Interface hardware supports the ability to lock the active SPE in active mode by means of the SPE-Select switches. The procedure for safely doing this is described in Chapter 5, "Responding to Alarms and Errors", and in STBY-SPE in Chapter 9, "Maintenance Object Repair Procedures". In locked mode, the system operates as if it is simplex:

- The standby SPE is inaccessible to the active SPE and active G3-MT login.
- No SPE-interchange is possible.
- Handshake is down and memory shadowing is off.

The locked state is intended for temporary use to prevent interchanges during maintenance sessions. No alarm is raised when the switches are locked. However, alarms against SPE-SELE are raised later if the switches are left out of the AUTO position for an extended length of time.

Memory Shadowing

Memory shadowing is used to keep the standby SPE's memory content up-to-date relative to the active SPE's memory. Memory shadowing is turned on automatically when the standby SPE has booted up and completed its own memory testing. Each write operation in active memory is replicated in the corresponding location in standby memory.

When shadowing into the standby SPE has been off (as when the system first comes up), system software checks to see if it is safe to restore shadowing. Handshake communication must be up. Then software verifies (with Test #920) that the SPEs have identical hardware configurations. If this passes and there are no shadow-relevant component failures, system software turns on shadowing again.

Once shadowing is turned on, it is necessary to refresh the contents of standby memory to bring it into full agreement with the active's by copying every word of active SPE memory to the standby. This takes approximately 5 minutes, though traffic load can increase the duration. When completed, the standby SPE is said to be "refreshed". **status spe** or the *Standby SPE Status Query Test (#855)* in the STBY-SPE test sequence can be used to check the REFRESH status of the standby. Unless the standby SPE is refreshed, interchange into it can disrupt service for several minutes. Otherwise, interchanges are minimally disruptive. A standby SPE exiting lock mode or just released from busyout must undergo this full re-initialization.

System software tracks the operation and raises a major alarm when refresh failure occurs. If shadowing stays on, system software automatically tries to refresh again 5 minutes later.

Generally, memory shadowing should always remain on. But there are conditions when the system legitimately operates with shadowing off:

- The standby SPE is undergoing any restart.
- The active SPE is undergoing a restart level of 2 or greater.
- The active SPE is locked.
- The standby SPE is busied out.

In any other situation, it is an error condition for shadowing to be off. The first two situations are transitory and shadowing should automatically be restored within 10 minutes. If shadowing has been on for several minutes, it is an error condition for the standby not to be refreshed.

Initialization: Bringing the Standby SPE Up

When the standby SPE has been out of service or is first coming up, SPE software executes the following steps:

1. Establishes handshake communication.
2. When SMM answers handshake, raises the standby SPE's SOH to *not refreshed* if it has no critical component alarms, or *partially functional* there are critical component alarms.
3. Tests for component mismatch (test number 920).
4. If there is no mismatch, and no major alarms against shadow-relevant components, and if SMM permits, turns on memory shadowing
5. If memory shadowing is successfully turned on, initiates the process of overall memory refresh
6. When refresh completes, if there are no critical component major alarms, raises the standby SPE's SOH to level *functional*

Standby SPE initialization is a lower priority than initializing the active and is therefore "paced" to lower CPU consumption. The above steps are carried out at 10 second intervals. During system initialization, the above sequence begins about 2 minutes after the G3-MT login prompt becomes available. Normally, the standby SPE should be fully initialized about 5 minutes after the availability of the login prompt. You can follow the execution of this sequence by repeatedly entering the command "status spe."

Should a step of this initialization sequence fail, system software retries that step at 30 second intervals until it succeeds. It does not proceed to the next step until the current one has succeeded. The failed condition is alarmed.

A procedure for bringing up the standby SPE after being in the SPE-down or locked modes is described at the end of Chapter 4, "Initialization and Recovery".

Power Interruptions

Switch cabinets and their associated power supplies can be powered by 110/208 volts AC either directly or from an Uninterruptible Power Supply (UPS) system. Alternatively, the cabinets and their power supplies may be powered by a -48V DC battery power plant, which requires DC-to-DC conversion power units in the switch.

If power is interrupted to a DC-powered cabinet or an AC-powered cabinet without optional backup batteries, the effect depends upon the decay time of the Power Distribution Unit. If the interruption period is shorter than the decay time, there is no effect on service, though some -48V circuits may experience some impact. If the decay time is exceeded for a PPN, all service is dropped, emergency transfer is invoked and the system must reboot when power is restored. If the decay time is exceeded for an EPN, all service to that Port network is dropped and the EPN must be reset when power is restored. If the EPN contains a Switch Node carrier, all service to Port Networks connected to that Switch Node is dropped.

Single carrier cabinets (SCCs), which can be used for EPNs, also have no battery backup. If power is interrupted for more than 1/4 second, all service is dropped, and emergency transfer is invoked for the EPN.

In the above cases, the cabinet losing power is unable to log any alarms. However, in the case of an EPN going down while the PPN remains up, alarms associated with the EPN will be reported by the system.

Nominal Power Holdover

AC-powered multicarrier cabinets are equipped with an internal battery, powered by its own charger, that provides a short term holdover to protect the system against brief power interruptions. This feature, known as the Nominal Power Holdover, is optional on cabinets supplied by a UPS and required on all other AC-powered cabinets. The battery is controlled in such a manner that it automatically provides power to the cabinet if the AC service fails. The duration of the holdover varies according to the type of carrier and whether or not the system has a duplicated SPE. See Table 1-4 for duration times:

Table 1-4. Nominal Power Holdover

Cabinet Type	Control Carrier	Entire Cabinet
PPN, duplicated SPE	5 min.	10 sec.
PPN, simplex SPE	10 min.	10 sec.
EPN	10 min.	15 sec.

Effects of Power Interruptions

Power holdover is controlled by software in the above manner in order to allow the system to sustain multiple brief power interruptions without exhausting the batteries before they have time to recharge. After power is restored, the batteries are recharged by a circuit that monitors current and time. If the batteries take more than 30 hours to recharge, a minor alarm is raised, indicating that the batteries must be replaced or the charger replaced.

The 397 Battery Charger Circuit immediately detects loss of AC power and raises a warning alarm against AC-POWER that is not reported to INADS. Certain maintenance objects such as external DS1 timing will report major alarms in this situation. When power is restored, the AC-POWER alarm is resolved.

PPN Cabinet with Power Holdover

When power is interrupted to a PPN cabinet, the effects depend upon the duration of the outage. Battery power is supplied to the whole cabinet for 10 seconds. If power is restored during that period, service is not affected. If the

interruption exceeds the cabinet holdover period, but is restored before the control carrier holdover expires, all service is dropped and emergency transfer is invoked. The SPE is kept up allowing for a speedy restoration of service since a reboot is not required. All non-SPE circuit packs must be reinserted, taking about a minute, depending on the size of the system. If the interruption exceeds the control carrier holdover, all service is dropped and the system must reboot when power is restored, taking up to 15 minutes, depending on the size of the system. Human intervention may be required if central office equipment has been busied out.

EPN Cabinet with Power Holdover

When power is interrupted to an EPN MCC for less than 15 seconds, no service effect results. If the interruption exceeds 15 seconds, only the control carrier is kept up. Circuit packs on other carriers are powered down. Only calls and other services maintained by circuit packs on the control carrier are maintained. For this reason, critical services and those that require a long time to restore (for example, Announcement circuit packs) should be located on control carriers. All service to Port Networks connected to a Switch Node in the EPN is lost. When power is restored, all affected EPNs are reset by system software (see EXP-PN in Chapter 9, "Maintenance Object Repair Procedures"). As with the PPN, a warning alarm is raised against AC-POWER.

External Alarm Leads

Each cabinet provides two leads for one major and one minor alarm contact closure that can be connected to external equipment. These are located on the SYSAM and Maintenance circuit packs. If the switch is under warranty or a maintenance agreement, EXT-DEV alarms are generated by the equipment connected to these leads and reported to INADS. These may be used to report failures of UPSs or battery reserves powering the switch. They are also commonly used to monitor adjuncts such as AUDIX.

Hardware Configurations

2

The DEFINITY Generic 3 switch supports a variety of configurations consisting of a Processor Port Network (PPN) and up to 21 Expansion Port Networks (EPNs). In addition, the system may use a Center Stage Switch (CSS) consisting of one or two Switch Nodes. This chapter describes the PPN and EPN cabinets, and the configuration of carriers and circuit packs within these cabinets.

Multicarrier Cabinet

The Multicarrier Cabinet (J58890A) accommodates from one to five circuit pack carriers, and is always used for the PPN. EPNs may use either multicarrier cabinets or single-carrier cabinets.

The power unit in the bottom of the cabinet supplies AC voltage or DC voltage from an external source to the power supply in each carrier. The cabinet optionally contains a battery charger and backup batteries to provide temporary power to the cabinet if the external source fails. The backup unit is optional for systems powered from an Uninterruptible Power Supply (UPS). The fan unit in the middle of the cabinet cools the carriers. AC-powered cabinets have two 120V AC receptacles in the back for use as an AC power source. These can be used to power the G3-MT.

Each cabinet must be connected to one of the following dedicated power sources:

- 120V AC 60 Hz at 50A from a National Electrical Manufacturing Association (NEMA) 5-50R power outlet or equivalent
- Single phase 240V AC, or three phase 208V AC, 60 Hz at 30A from a NEMA L 14-30R power outlet or equivalent
- -48V DC battery plant

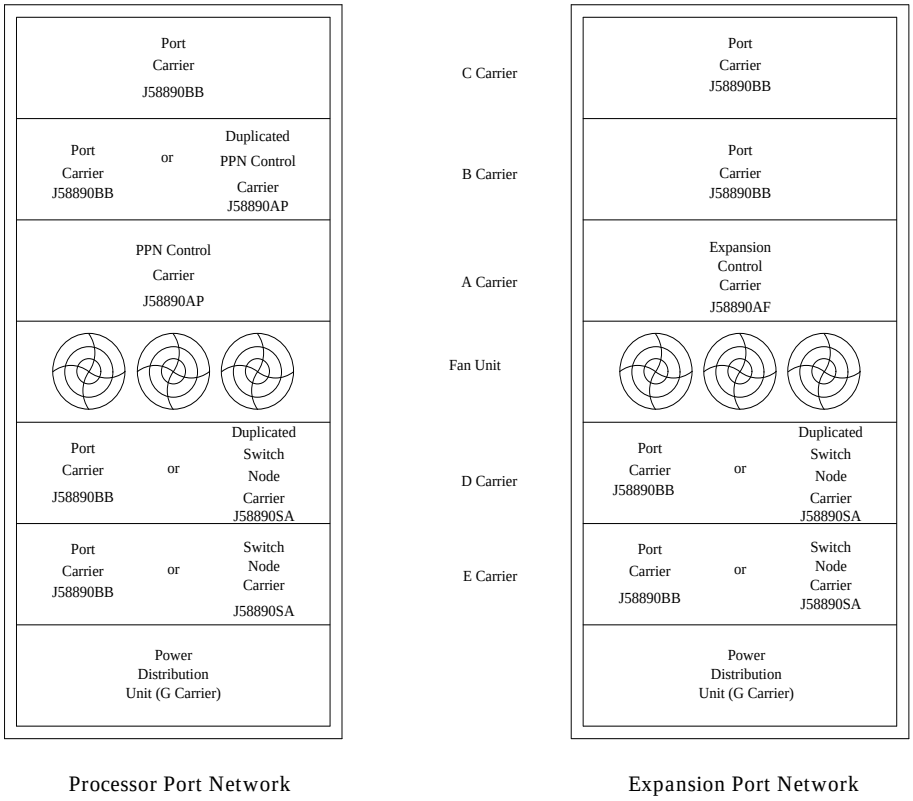

Figure 2-1. Multicarrier Cabinet (J58890A) Configurations

Processor Port Network Cabinet

The PPN cabinet, pictured above, is the primary cabinet in all G3r systems. It contains the Switch Processing Element (SPE) that controls the system, and one Port Network which is interconnected by the daisy-chained TDM/LAN bus. If the system has a CSS, the PPN cabinet also contains a switch node. The individual carriers are described in following sections.

The A position always contains a PPN Control Carrier (J58890AP), also known as the Processor Carrier, which holds the SPE circuit packs. If the system has a duplicated SPE, the B position holds a second PPN Control Carrier. At least one, and up to four, Port Carriers (J58890B) can be located in the other four carrier positions, depending on traffic needs and whether the system uses those positions for other types of carriers. In general, Port Carriers are added in the sequence, B-C-D-E, unless those positions are used otherwise, as follows.

If the system has a Center Stage Switch, the E position holds a Switch Node Carrier. In a CSS system with duplicated PNC, the D position holds a Switch Node Carrier that duplicates the one in E position. In large systems requiring a CSS with two Switch Nodes, the second SN is located in an EPN cabinet, for both simplex and duplicated systems. Systems that have added a CSS configuration after the original installation may have their first SN in an EPN cabinet.

Multicarrier Expansion Port Network Cabinets

When used for an EPN, the multicarrier cabinet supports one Port Network with a daisy-chained TDM/LAN bus, or, optionally, two separate PNs if the cabinet does not contain a Switch Node. A cabinet with two PNs has two separate TDM/LAN bus daisy-chains. One TDM/LAN bus between carriers in positions A, B and C supports the first PN, and another TDM/LAN bus between positions D and E supports the second PN. The above figure shows locations of carriers in EPN cabinets.

Each EPN cabinet contains one Expansion Control Carrier (J58890AH) located in the A position. In cabinets with one PN, up to four Port Carriers are added as needed in the sequence B-C-D-E, unless the D or E positions are used for a Switch Node. Cabinets with two PNs use optional Port Carriers in the B position, and then the C position for the first PN (above the fans). The second PN, (below the fans), is configured with the first Port Carrier in the E position and an optional second Port Carrier in D position.

In large systems with a CSS that requires two Switch Nodes, the second SN is located in an EPN cabinet (this is usually cabinet number 1, PN number 2). This EPN may not be remoted by a DS1C complex. An EPN with an SN has a Switch Node Carrier in E position. In systems with duplicated PNC, (critical reliability option), the D position holds another Switch Node Carrier that duplicates the one in E position.

Single-Carrier EPN Cabinet

Single-carrier cabinets may be used for remotely located EPNs. The following figure shows two examples of these configurations. Each EPN requires an Expansion Control Cabinet (ECC) (J58890N) which resides in the bottom, or A, position. From one to three Port Cabinets (J58890H) may be stacked on top of the ECC as needed, in the order B-C-D. For administration and maintenance purposes, each stack constituting a single EPN is identified with a single cabinet number.

Separate EPNs, each consisting of one or more single-carrier cabinets, may be stacked on top of each other up to a maximum of four cabinets. In such a configuration, each EPN has its own ECC and is identified with a different cabinet number, with the ECC denoted in A position.

Each cabinet has 18 vertical slots that hold circuit packs. A blank faceplate covers each unused slot.

A screw-type latch, located below the identification stripe, secures the front door to the cabinet. Turning the screw counter-clockwise loosens the latch and releases the door. Two holes in the rear bottom of a cabinet can secure it to the floor, which is required for earthquake protection.

Cabinet clips in the front of the cabinets electrically connect the cabinets together. At the rear of the cabinets, a ground plate connected between cabinets provides ground integrity.

One of two power sources can be used. A power cord with a three-prong plug on one end and a single connector on the other end connects the cabinet's power supply to a dedicated 50 Hz to 60 Hz 120 VAC power sources at 15A per single cabinet or 20A per pair of cabinets. The cabinet may optionally be powered by a dedicated -48 VDC 25A battery plant if there is no UPS connected to the cabinet.

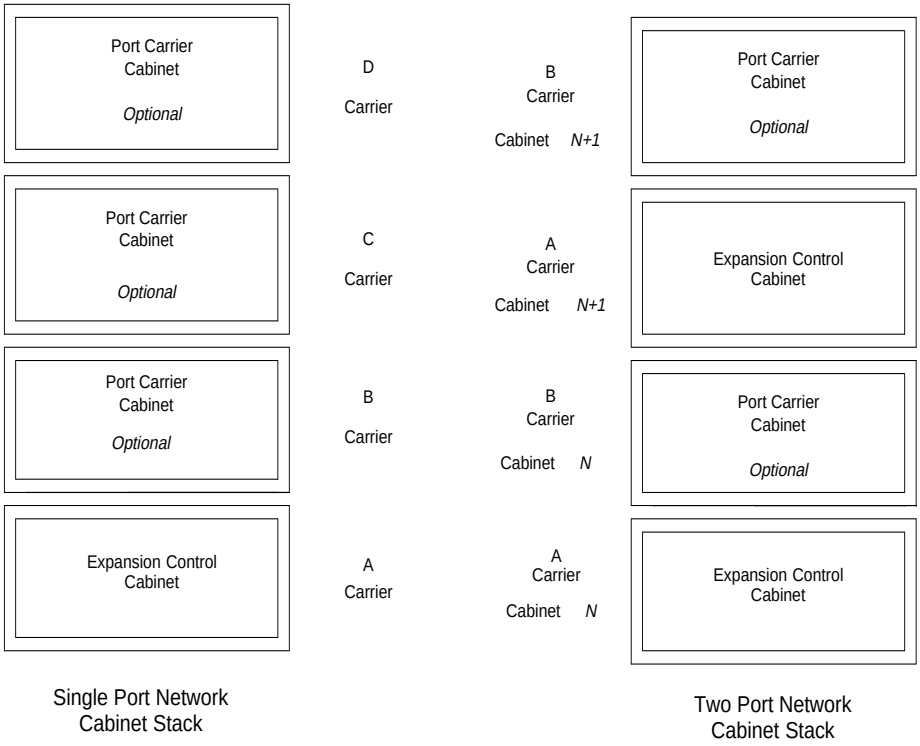

Figure 2-2. Single-carrier Cabinet EPN Configurations

Carriers in Multicarrier Cabinets

This section describes the types of carriers that can be installed in multicarrier cabinets. There are two types of circuit pack slots in the carriers:

- Port, which is colored purple and can accept any purple-labeled (not white-labeled) circuit pack
- Dedicated, which is colored white and can accept only a circuit pack assigned to that slot

Each port slot in a port carrier and an expansion control carrier is connected to a cross-connect field by a 25-pair connector on the carrier's rear panel.

Z100A (.75-in width) and Z100C (.5-in width) blank face plates cover unused circuit pack slots in the carriers to maintain proper air flow.

PPN Control Carrier (J58890AP)

The PPN Control Carrier contains only dedicated slots used for circuit packs that compose the switch processing element (SPE). It does not contain port circuit pack slots. This carrier always resides in position A of the PPN cabinet. In a system with a duplicated SPE, a second PPN Control Carrier resides in the B position of the PPN cabinet. Figure 2-3 and Table 2-1 describe the function of each slot in the PPN Control Carrier. See Generic 3r Circuit Packs, page 2-31, for more information on circuit pack functions.

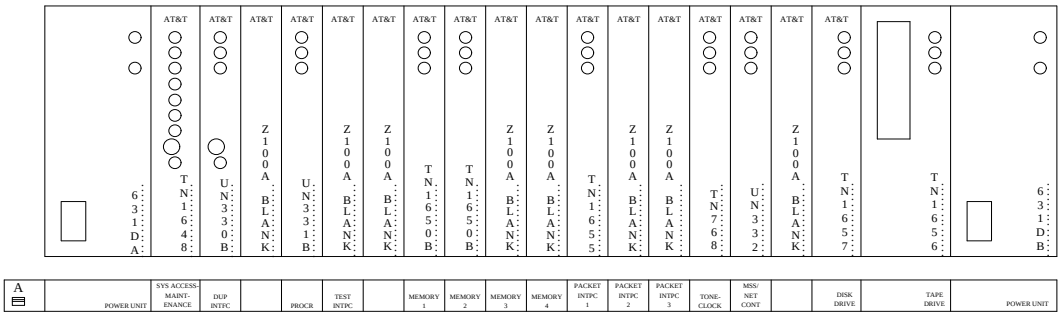

Figure 2-3. PPN Control Carrier (J58890AP)

Table 2-1. PPN Control Carrier Circuit Pack Slots

Slot Name	Circuit Pack	Code	Notes
POWER UNIT (left side)	Power Unit (+5V)	631DA1	Required for AC-powered systems
		644A1	Required for DC-powered systems
SYS ACCESS/ MAINTENANCE	System Access and Maintenance	TN1648	Required
DUP INTFC	Duplication Interface	UN330B	Required for systems with duplicated SPE
PROCR	RISC Processor	UN331B	Required
TEST INTFC			Used by field support in special situations to connect diagnostic equipment
MEMORY 1 to 4	32 Mbyte Memory	TN1650B	Two required, up to four optional
PACKET INTFC 1 to 3	Packet Interface	TN1655	One required, two slots reserved for future development; with duplicated SPE, both carriers must use same slot
TONE-CLOCK	Tone-Clock	TN 768 or TN780	Required; TN780 required for interface to external Stratum 3 Clock
MSS/ NET CON	Mass Storage System/ Network Control	UN332	Required
DISK DRIVE	Disk Drive	TN1657	Required
TAPE DRIVE	Tape Drive	TN1656	Required
POWER UNIT (right side)	Power Unit (-48V/-5V)	631DB1	Required for AC-powered systems
		645B1	Required for DC-powered systems

PPN Control Carrier (J58890AP) — Rear View

In the figure below, the upper portion shows the pin fields on the backplane of the carrier with the I/O connector plate removed. The lower portion shows the connector plate which covers the lower pin fields and connects to them by cable.

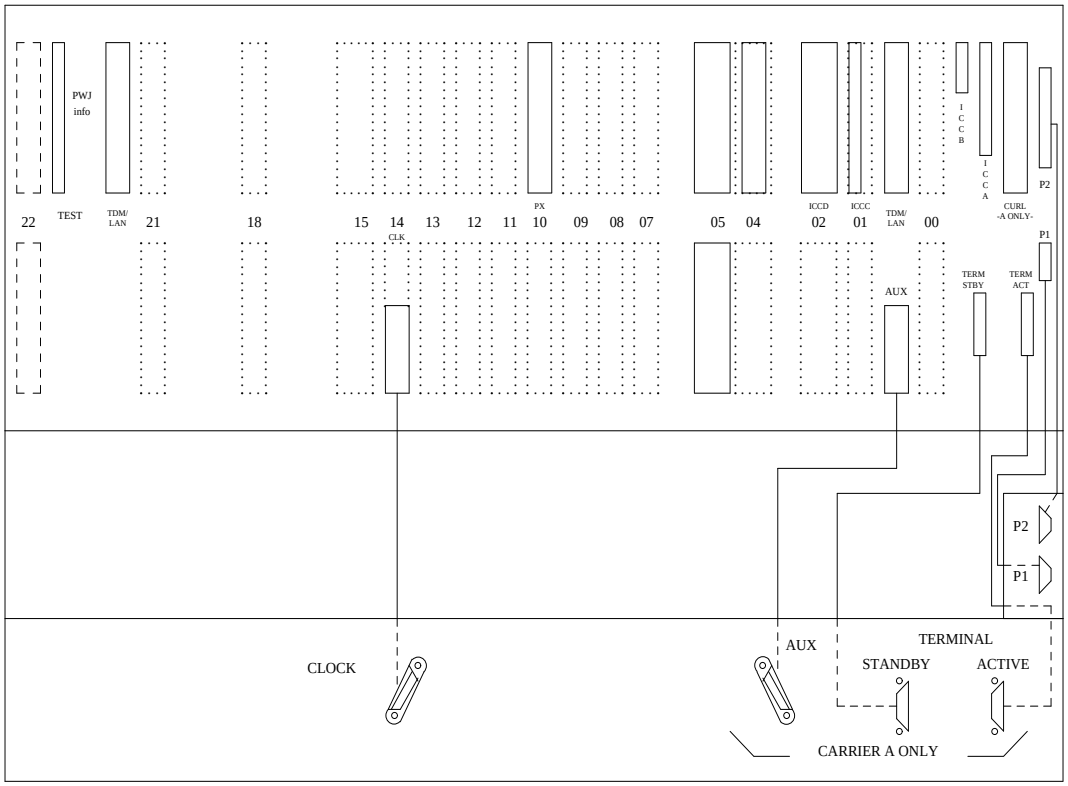

Figure 2-4. PPN Control Carrier (J58890AP) — Rear View

Table 2-2. PPN Control Carrier Backplane Connectors

Connector	Function
CLOCK	Stratum 3 clock interface between the control carrier and the cross-connect field
AUX (auxiliary)	Connects a tip/ring pair to the cross-connect field, customer alarms, attendant console power, and emergency power transfer
TERMINAL, ACTIVE	Connects an administration terminal to the TN1648 SYSAM circuit pack in the control carrier
TERMINAL, STANDBY	Used only in duplicated-processors to connect an administration terminal to the stand-by control carrier
P1 and P2	Connect to cabinet harness to provide: Carrier identification -48V DC power to fans Cabinet alarm signals Power supply and distribution signals Electrical ground connection from the A carrier to the cabinet

A current limiter board (CFY1B) is plugged into the backplane of the PPN Control Carrier located in the A position only. The board supplies emergency transfer logic, and current-limited power: -48V to fans and ring generator; 5V to trip main circuit breaker in an over-temperature condition and to operate the ringing transfer relay.

Port Carrier (J58890BB)

Figure 2-5 and Table 2-3 describe the function of each carrier slot.

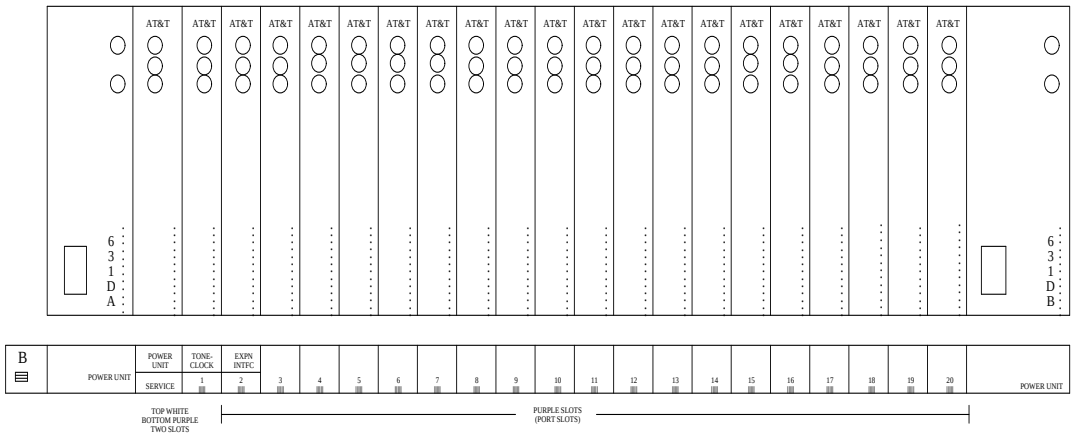

On E-position Port Carriers, the TONE-CLOCK and EXPN INTFC slots are reversed.

Figure 2-5. Port Carrier (J58890BB)

Table 2-3. Port Carrier Circuit Pack Slots

Error Code	Circuit Pack	Test Result	Description/ Recommendation
POWER UNIT (left side)	Power Unit (+5V)	631DA1	Required for AC-powered systems
		644A1	Required for DC-powered systems
POWER UNIT/ SERVICE	Power Unit, Neon	TN755B	This position is addressed as "00" in commands and displays. It does not provide tip and ring connectivity to the wall field. The following circuit packs are optional, depending on which features the system incorporates. One TN771 is required in all PPNs, and one in each EPN of Critical Reliability systems.
	Call Classifier	TN744	
	Integrated Announcement	TN750	
	Speech Synthesizer	TN725, 433,457	
	Tone Detector	TN748, TN420	
	Maintenance/ Test	TN771C	
TONE-CLOCK 1	Tone-clock	TN768	Required as follows: EPN with duplicated PNC: B carrier EPN cabinet with two PNs: D carrier E carrier of an EPN cabinet with two PNs and duplicated PNC; the Tone-clock slot on this carrier is located with Port Slot #2 If the carrier does not contain a Tone-Clock board, any common port board may be installed in this slot.
EXPN INTFC 2	Expansion Interface	TN570	Optional, depending on the system's connectivity and duplication configuration; if not used for an EI board, this slot can accept any common port board.
3			If the system's connectivity and duplication configuration require a second EI on a port carrier, it resides in this slot; otherwise, this slot accepts any common port board.
4 to 20	Port Boards		Any common port board.

Continued on next page

Table 2-3. Port Carrier Circuit Pack Slots — *Continued*

Error Code	Circuit Pack	Test Result	Description/ Recommendation
POWER UNIT (right side)	Power Unit (-48V/-5V)	631DB1	Required for AC-powered systems
		645B1	Required for DC-powered systems

Port Carrier — Rear View

Figure 2-6 below represents a *typical* port carrier. The upper portion shows the pin fields on the backplane of the carrier with the I/O connector plate removed. The lower portion shows the connector plate which covers the lower pin fields and connects to them by cable.

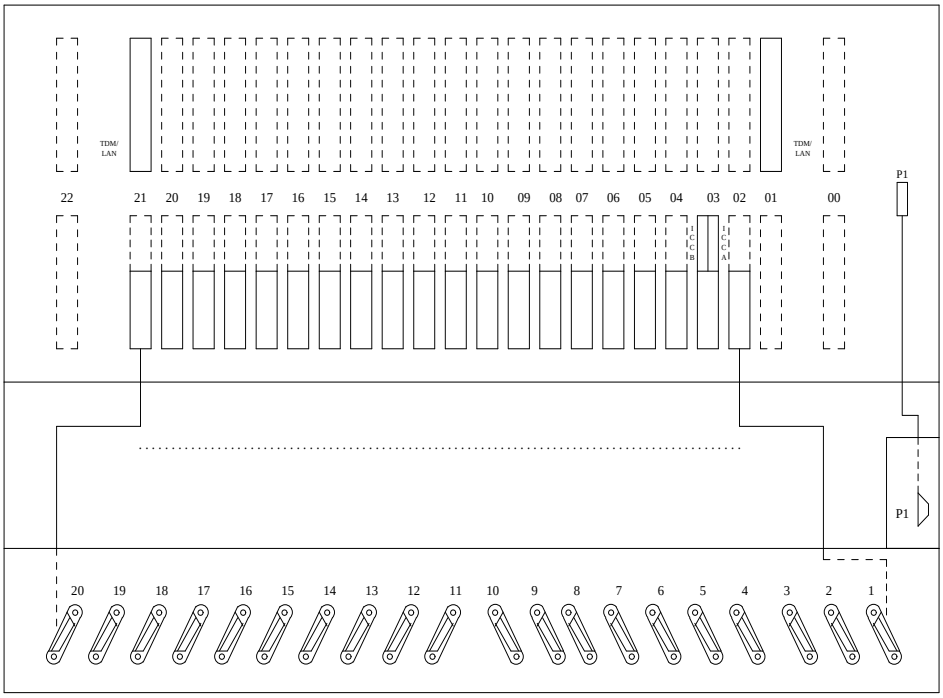

Figure 2-6. Port Carrier — Rear View

Table 2-4. Port Carrier Backplane Connectors

Connector	Function
1 to 20	Ports that provide interfaces between the circuit pack slots and the cross-connect field, except in the case noted in Table 2-3.
P1	Cabinet Harness connector providing: Carrier identification Ringing voltage input to carrier Access to alarm and control circuits

Expansion Control Carrier (J58890AF)

The Expansion Control Carrier is located in position A of each EPN. Figure 2-7 and Table 2-5 describe the function of each carrier slot.

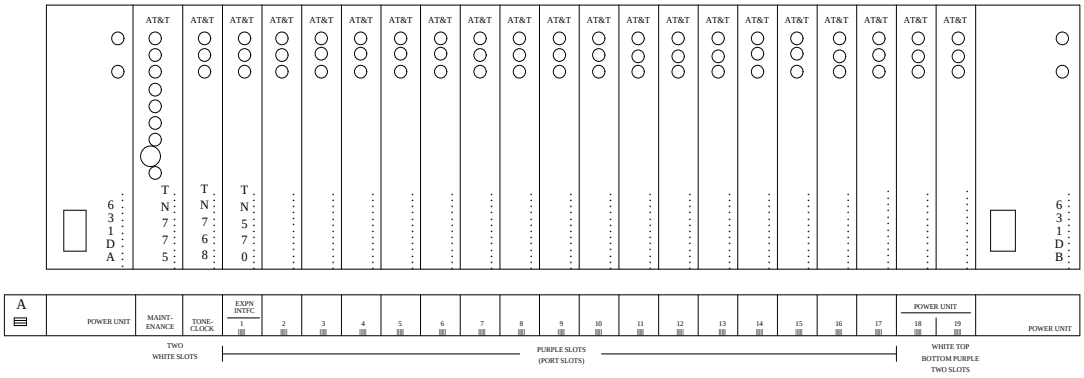

Figure 2-7. Expansion Control Carrier (J58890AF)

Table 2-5. Expansion Control Carrier Slots

Slot Name	Circuit Pack	Code	Notes
POWER UNIT (left side)	Power Unit (+5V)	631DA1	Required for AC-powered systems
		644A1	Required for DC-powered systems
MAINTENANCE	Maintenance	TN775B	Required
TONE-CLOCK	Tone-Clock	TN768	Required
EXPN INTFC	Expansion Interface	TN570	Required
2 to 19	Port Boards		Any common port board. Slot 2 may house a second EI if the configuration requires one.
POWER UNIT/ 18, 19	Power Unit, Neon	TN755B	Required for certain features; otherwise will accept any common port board.
POWER UNIT (right side)	Power Unit (-48V/-5V)	631DB1	Required for AC-powered systems
		645B1	Required for DC-powered systems

Expansion Control Carrier — Rear View

In the figure below, the upper portion shows the pin fields on the backplane of the carrier with the I/O connector plate removed. The lower portion shows the connector plate which covers the lower pin fields and connects to them by cable.

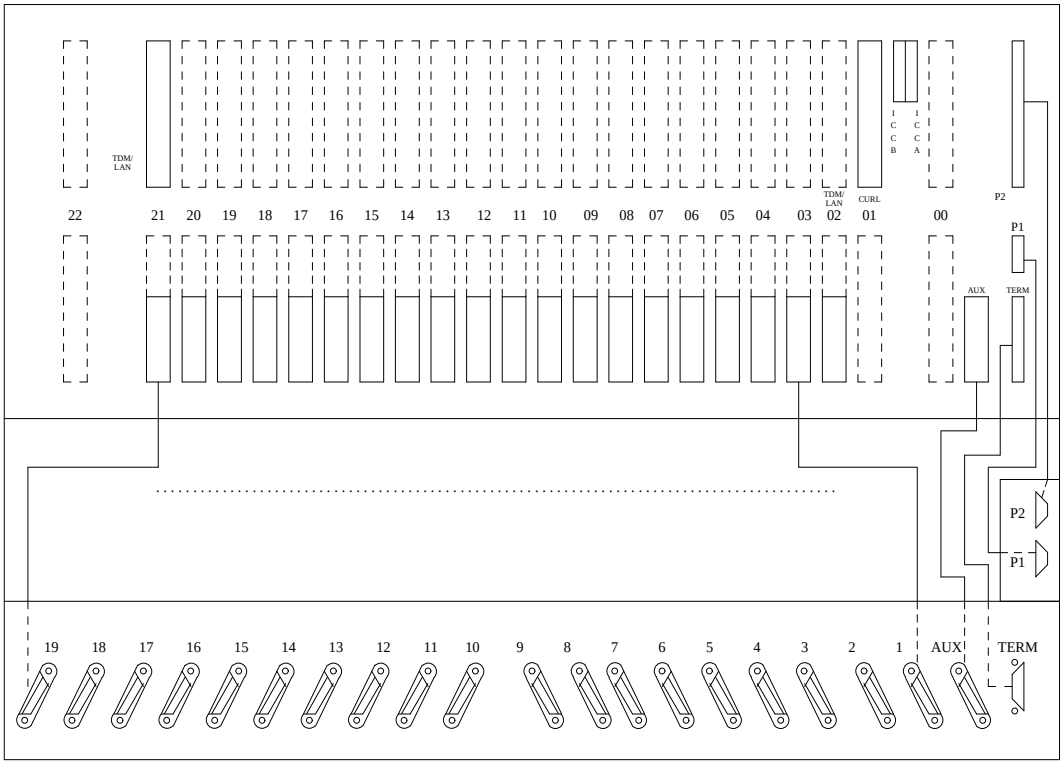

Figure 2-8. Expansion Control Carrier — Rear View

A current limiter board (CFY1B) is plugged into the backplane of the expansion control carrier. The board supplies emergency transfer logic, and current-limited power: -48V to fans and ring generator; 5V to trip main circuit breaker in an over-temperature condition and to operate the ringing transfer relay.

Switch Node Carrier (J58890SA)

Switch Node carriers house the components of a Center Stage Switch (CSS). The first switch node is located in carrier E of the PPN. If duplicated in a Critical Reliability configuration, its duplicate is located in carrier D of the PPN. The second switch node is located in carrier E of a non-remoted EPN. If duplicated in a Critical Reliability configuration, its duplicate is located in carrier D of the same EPN.

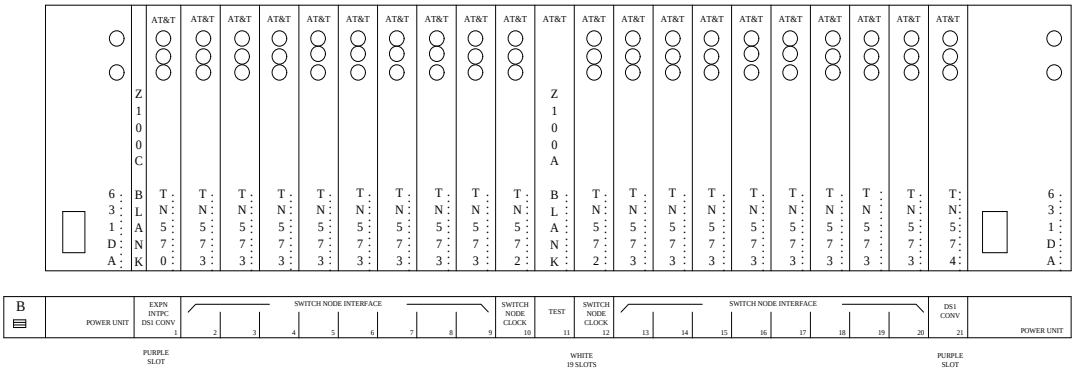

Figure 2-9. Switch Node Carrier (J58890SA)

Table 2-6. Expansion Control Carrier Backplane Connectors

Connector	Function
1	Fiber-optic cable interface between a TN570 in slot 1 and the far endpoint in another PN
2 to 19	Ports between circuit packs and cross-connect field
AUX	Connects a tip/ring pair to the cross-connect field for customer alarms, attendant console power, and emergency power transfer
TERM	Connects an administration terminal to an EPN Maintenance circuit pack
P1	Cabinet harness connector; provides power to fans
P2	Cabinet harness connector; provides control signals and ringing voltage

Table 2-7. Switch Node Carrier Circuit Pack Slots

Error Code	Circuit Pack	Test Result	Description/ Recommendation
POWER UNIT (left side)	Power Unit (+5V)	631DA1	Required for AC-powered systems
		644A1	Required for DC-powered systems Power units in this position provide power to slots 1 to 10.
EXPN INTFC DS1 CONV/ 1	DS1 Converter	TN574	Provides fiber connectivity via DS1 facilities to a remote EPN; this slot used in conjunction with an SNI in one of slots 2 to 9.
	Expansion Interface	TN570	Used for an EI board only in the PPN cabinet in a system with duplicated PNC (critical reliability); used in conjunction with adjacent SNI
2 to 9, 13 to 20	Switch Node Interface	TN573	SNIs are added sequentially as needed beginning with slot 2. If a second switch node is needed, (for more than 16 EPNs), up to 5 SNIs (those in slots 7, 8, 9, 13 and 14) are connected to corresponding SNIs in the other SN.

Continued on next page

Table 2-7. Switch Node Carrier Circuit Pack Slots — *Continued*

Error Code	Circuit Pack	Test Result	Description/ Recommendation
SWITCH NODE CLOCK / 10	Switch Node Clock	TN572	Required
SWITCH NODE CLOCK / 12	Switch Node Clock	TN572	Used in high reliability option only (duplicated SPE, simplex PNC)
DS1 CONV/ 21	DS1C	TN574	Used as above in conjunction with an SNI in one of slots 13 to 20
POWER UNIT (right side)	Power Unit (+5V)	631DA1	Required for AC-powered systems
		644A1	Required for DC-powered systems The right side power unit is needed only if any of slots 12 to 21 are occupied.

Switch Node Carrier — Rear View

In the figure below, the upper portion shows the pin fields on the backplane of the carrier with the I/O connector plate removed. The lower portion shows the connector plate which covers the lower pin fields and connects to them by cable.

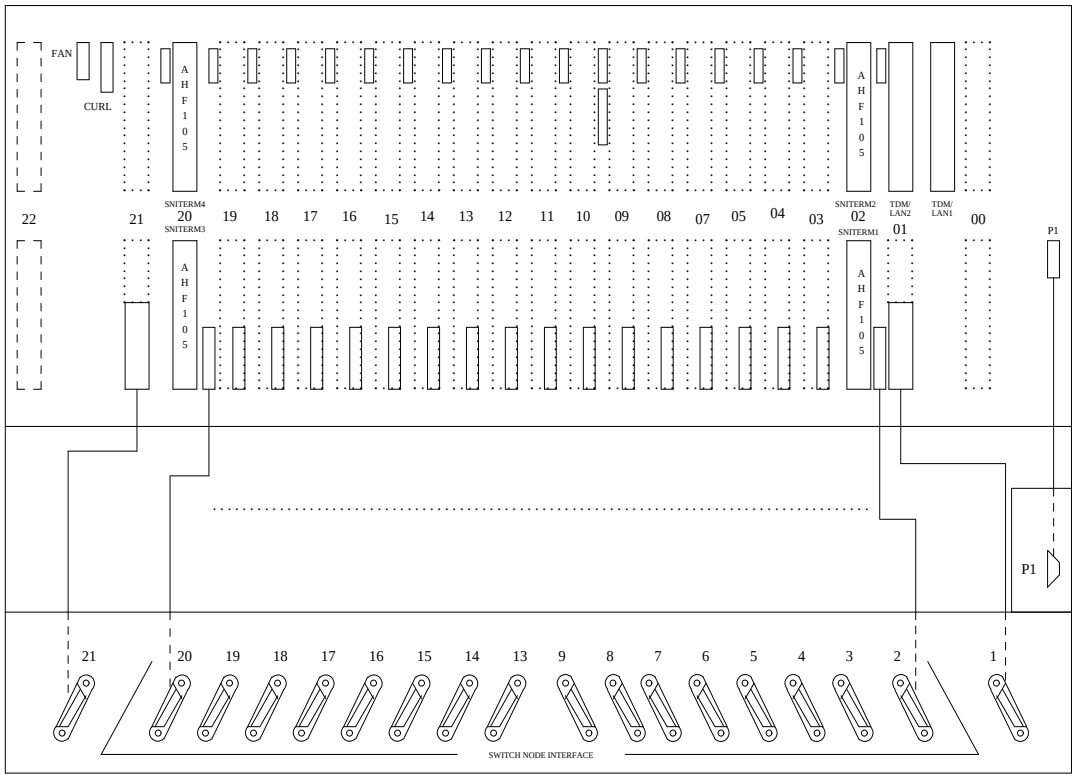

Figure 2-10. Switch Node Carrier — Rear View

Table 2-8. Switch Node Carrier Backplane Connectors

Connector	Function
1	Expansion interface port that provides an interface for the cable between the TN570 EI circuit pack in slot 1 and the TN573 SNI circuit pack in slot 2 for a duplicate PPN only. Also used for a DS1C.
2 to 9, and 13 to 20	Switch node ports that provide fiber-optic cabling interfaces between TN573 SNI circuit packs and other TN573 circuit packs connected to SN ports or TN570 circuit packs in EPNs
10, 11, and 12	Do not exist
21	Port that provides an interface to connect the TN574 DS1 Converter circuit pack to the cross-connect field and an SNI
P1	Cabinet harness connector providing carrier identification and alarm and control signals

Carriers in Single-Carrier Cabinets

There are two types of circuit pack slots in single-carrier cabinets:

- Port slots, which are colored purple and can accept any purple-labeled circuit pack
- Dedicated slots, which are colored white and can accept only a circuit pack of the type assigned to that slot

In all cabinets, a 158J four-inch apparatus blank face plate always covers the area to the left of slot one. Any unused slot is covered with a 158B blank face plate.

Expansion Control Cabinet (J58890N)

The Expansion Control Cabinet is the bottom and only required cabinet in a stack of single-carrier cabinets constituting a remote EPN. The following figures and tables explain the functions of the circuit pack slots.

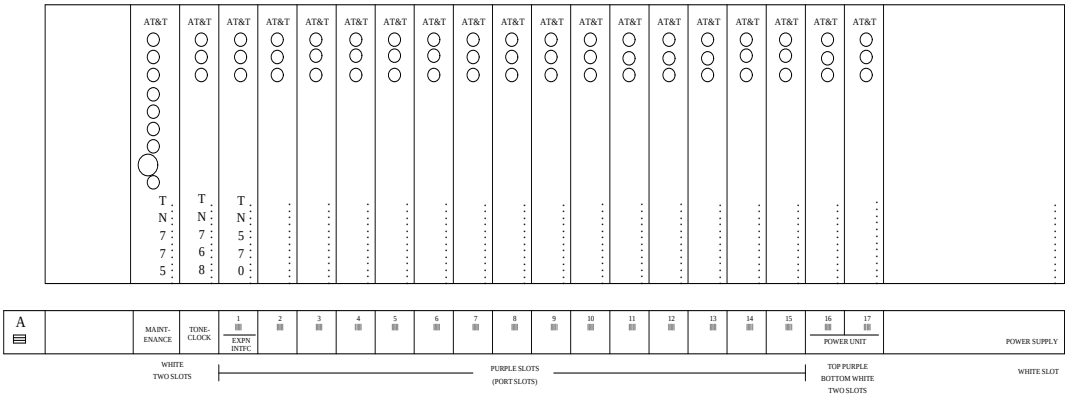

Figure 2-11. Expansion Control Cabinet (J58890N)

Table 2-9. Expansion Control Cabinet Circuit Pack Slots

Slot Name	Circuit Pack	Code	Notes
MAINTENANCE	Maintenance	TN775B	Required
TONE-CLOCK	Tone-Clock	TN768	Required
EXPN INTFC	Expansion Interface	TN570	Required
2 to 17	Port Boards		Any common port board. The first three positions may contain EI or DS1C boards in a DS1C-remoted EPN.
16 or 17/ POWER UNIT	Power Unit, Neon	TN755B	Required for certain features; otherwise, any port board
POWER SUPPLY	Power Supply +5V/-48V/-5V/+12V	WP91153	Required for AC-powered systems
		676B	Required for DC-powered systems

Expansion Control Cabinet — Rear View

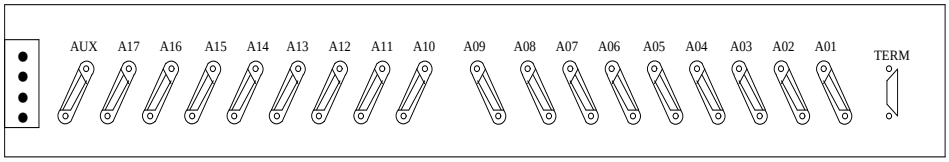

Figure 2-12. Expansion Control Cabinet — Rear View

Table 2-10. Expansion Control Cabinet Backplane Connectors

Connector	Function
1	Fiber-optic cable interface between TN570 in slot 1 and a TN570 in a port carrier or a TN573 in a switch node carrier.
2 to 17	Ports that provide interfaces between circuit packs and the cross-connect field. The first three connectors may be used for fiber-optic or metallic cabling to EI or DS1C board in a DS1C-remoted EPN.
AUX (auxiliary)	Connects a tip/ring pair to the cross-connect field, customer alarms, attendant console power, and emergency power transfer
TERMINAL	Connects an administration terminal to the maintenance circuit pack

Port Cabinet (J58890H)

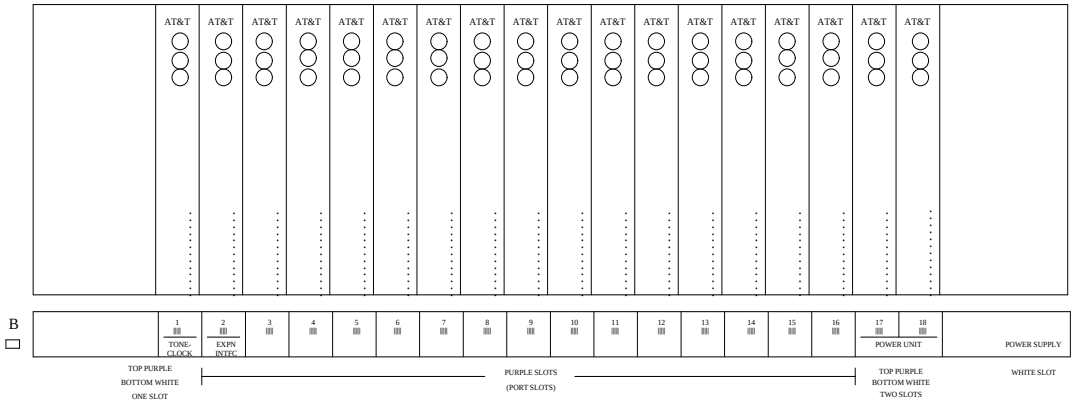

Figure 2-13. Port Cabinet (J58890H)

Table 2-11. Port Cabinet Circuit Pack Slots

Slot Name	Circuit Pack	Code	Notes
1/TONE-CLOCK	Tone-Clock	TN768	Required in Critical Reliability systems (duplicated PNC) In simplex PNC systems, this slot can accept any common port board.
2/EXPN INTFC	Expansion Interface	TN570	Used in systems with duplicated PNC; otherwise, any common port board.
3 to 16	Port Boards		Any common port board
17 or 18/	Power Unit, Neon	TN755B	Required for certain features;
POWER UNIT			Otherwise, any common port board
POWER SUPPLY	Power Supply +5V/-48V/-5V/+12V	WP91153	Required for AC-powered systems
		676B	Required for DC-powered systems

Port Cabinet — Rear View

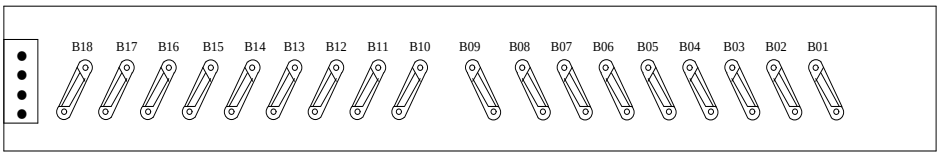

Figure 2-14. Port Cabinet — Rear View

Table 2-12. Port Cabinet Backplane Connectors

Connector	Function
2	Expansion interface port that provides an interface for the fiber-optic cable between the TN570 in slot 2 and a TN573 in a switch node carrier.
1 to 18	Ports that provide interfaces between circuit packs and the cross-connect field

PNC Cabling — Fiber Hardware

The term "fiber" is used to refer to all the hardware needed for the three basic types of connections used to form multi-PN systems. Fiber administration specifies the endpoints to be connected, optional DS1C locations, and parameters for DS1 Facility Line encoding and equalization. The three connection types are:

1. EI-to-EI or EI-to-SNI Intercabinet hardware
2. EI-to-SNI or EI-to-EI intracabinet hardware
3. EI-DS1C or SNI-DS1C hardware

EI-to-EI or EI-to-SNI Intercabinet Fiber Optic Cables

EI-to-EI or EI-to-SNI intercabinet connections are implemented by installing a lightwave transceiver on the I/O connector plate for each of the administered fiber endpoints. Each lightwave transceiver has a receive and a transmit bayonet mount for a 62.5 micron fiber connection. Standard fibers, coded FL2P-P-xx (where xx is the length), are available in various lengths up to 200 feet. These fibers are used to connect lightwave transceivers to each other when they are close enough together, or to optical cross-connect facilities for greater distances.

The lightwave transceivers are powered from I/O connector plate leads attached to TN570 Expansion Interface circuit pack or a TN573 Switch Node Interface circuit pack. The transceivers include loop-around capabilities to support fiber fault isolation. Either of two different 9823-type transceivers may be used, depending upon the length of the fiber, as shown below. The transceivers at each end of a given fiber should match. The figure below illustrates the interconnection of fiber-optic hardware.

Part No.	Maximum fiber length
9823A	4900 ft.
9823B	25,000 ft.

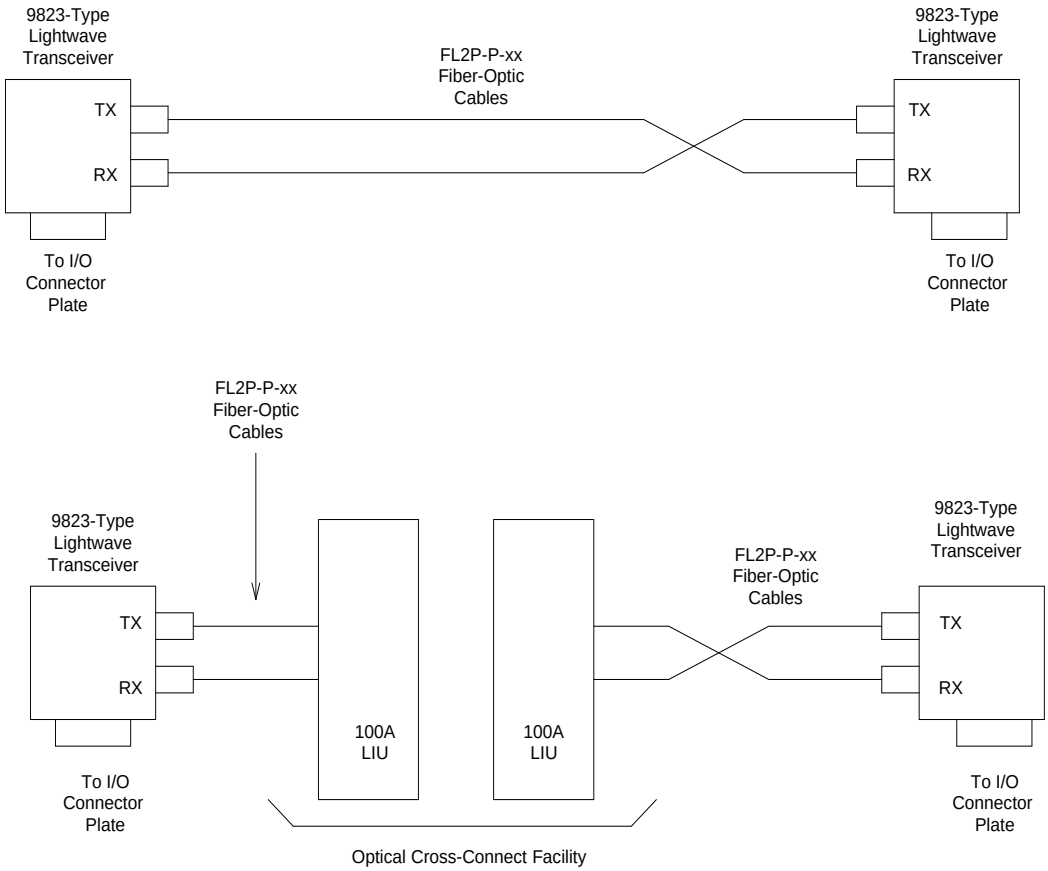

Figure 2-15. Fiber Link Connection Hardware

EI-to-SNI or EI-to-EI Intracabinet Metallic Cabling

Metallic cable may be substituted for optical cable for "fiber" connections between EIs or between an EI and an SNI in the same cabinet. The same I/O plate connectors are used. The metallic cables should not be used for intercabinet connections since doing so violates system ground integrity. The metallic cable comes in two lengths.

Part No.	Length	Intended use
H600-278,G1	13 inches	From an EI in slot 1 of a switch node carrier to an SNI in the same half of the carrier (usually the adjacent slot)
6H00-278,G2	66 inches	From an EI to an SNI in the same cabinet, but in a different carrier or different half of a carrier

DS1C Cabling

Digital services (DS1) can be used to connect PNs that are up to 100 miles apart when fiber optic cabling is not practical. (Fiber-connected PNs must be less than 25,000 feet from the PPN.) A TN574 DS1 Converter (DS1C) circuit pack serves as the interface between the network and an EI or SNI on the switch. DS1 cabling on a carrier consists of a Y-cable that connects a DS1C to an EI or SNI and to the network. The following cables may be used, depending upon where the DS1C and the EI or SNI are located:

Connection Type	Length	Comcode Number
On same half carrier	1 ft.	846448637
On different half carriers in same cabinet	5.5 ft.	846448645
Between two adjacent cabinets	1 ft., used with 2 9823As, and 1 20-ft. fiber-optic cable	846448652, and 1 846885259 bracket

The DS1C to EI/SNI cable is a shielded metallic Y-cable held in place at the EI/SNI port connector by a 4B retainer and at the DS1C port connector by a 4C retainer. The cable end with one 25-pair amphenol connector attaches to the I/O Plate connector for the EI or SNI. The end with two 25-pair amphenol connectors attaches to the DS1C I/O Plate connector.

The 13-inch cable 846448652 connects the DS1C to a fiber-optic cable, enabling the DS1C to connect to an EI or SNI at a greater distance. The cable end with one 25-pair amphenol connector attaches to a lightwave transceiver using the

846885259 bracket. The end with two 25-pair amphenol connectors attaches to the DS1C I/O Plate connector. The other end of the fiber-optic cable connects to a lightwave transceiver attached to the I/O plate connector of the EI or SNI.

An H600-348 cable connects the DS1C cable to a channel service unit (CSU), which is in turn connected to a wall field. (Alternatively, connection is sometimes made directly from the Y-cable to the wall field. See the pinout for the 50-pin connector at the end of the *Fiber Fault Isolation Procedure* in Chapter 5, "Responding to Alarms and Errors".) This cable provides from one to four DS1 connections. One end of the H600-348 cable is plugged into the 50-pin amphenol piggy-back connector on the 8464486xx cable connected to the DS1C port connector. The other end of the H600-348 cable has four 15-pin sub-miniature D-type connectors that plug into the CSU. A pinout of this cable appears the end of the *Fiber Fault Isolation Procedure* in Chapter 5, "Responding to Alarms and Errors". H600-348 cables come in the following lengths:

Group No.	Length (ft.)	Group No.	Length (ft.)
G1	25	G5	125
G2	50	G6	200
G3	75	G7	400
G4	100	G8	650

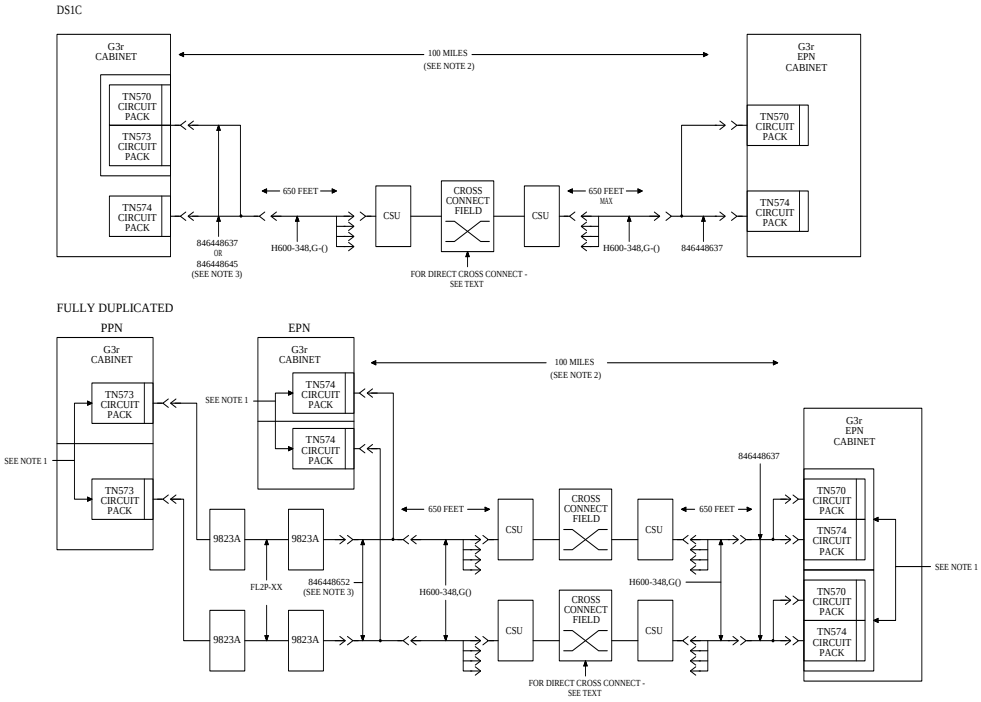

Figure 2-16. Typical DS1C Connections to Remote EPNs

1. Place duplicate pairs in different carriers.

2. When remoting two (2) or more, the maximum cable distance between any two (2) remoted end points is 100 miles. For example, if epn 1 is 75 miles from the PPN, then EPN2 can only be 25 miles from the PPN.

3. 846447637 is used within a carrier. 846448645 is used within a cabinet between carriers.

Figure 2-17. Typical DS1C Connections to Remote EPNs

Generic 3r Circuit Packs

Table 2-13 and Table 2-14 list all circuit packs supported by DEFINITY Generic 3r Communications Systems. Circuit packs supported by G3r V1 are marked with an asterisk. The rest are supported only by G3r V1.1 and V2. When multiple versions of a circuit pack exist (as indicated by a letter suffix), the minimum acceptable version is given. For additional information concerning vintages and current versions, see *Reference Guide for Circuit Pack Vintages and Change Notices* which is published periodically as a special edition of the *AT&T Technical Monthly*. For more information concerning which circuit packs are required for different environments and locales, see the Application Notes section of *DEFINITY Communications System Generic 3 V2 Implementation,* 555-230-653.

Table 2-13 lists circuit packs by number. Table 2-14 lists them by function and name

Table 2-13. Generic 3r Circuit Packs

Code	Name	Code	Name
631AR*	AC Power Unit (+5V)	TN437	4w Analog Tie Trunk
631BR*	AC Power Unit (-48V)	TN438	Analog CO Trunk
631DA*	AC Power Unit (+5V)	TN439	2w Analog Tie Trunk
631DB*	AC Power Unit (-48/-5V)	TN447	Analog CO Trunk/PPM
631WA*	AC Power Unit (+5V)	TN457	Speech Synthesizer
631WB*	AC Power Unit (-48V)	TN458	4w Analog Tie Trunk
644A*	DC Power Unit (+5V)	TN459	DID Trunk
645B*	DC Power Unit (-48/-5V)	TN464C*	24/32-Channel DS1 Interface
676B*	DC Power Unit (+5/-5/-48V)	TN465	Analog CO Trunk/PPM
9823A*	Lightwave Transceiver	TN467	8p Analog Line
9823B*	Lightwave Transceiver	TN468	16p Analog Line
AHF105*	Switch Node Terminator	TN479	16p Analog Line
AHF111*	Bus Terminator	TN497	2w Analog Tie Trunk

Continued on next page

Table 2-13. Generic 3r Circuit Packs — *Continued*

Code	Name	Code	Name
CFY1B*	Current Limiter	TN553*	Packet Data Line
TN413	8p Digital Line	TN556*	12/24p ISDN BRI Line
TN417	Auxiliary Trunk	TN566*	DEFINITY. AUDIX.
TN420B	Tone Detector	TN570*	Expansion Interface
TN429	DIOD Trunk	TN572*	Switch Node Clock
TN433	Speech Synthesizer	TN573*	Switch Node Interface
TN436	DID Trunk	TN574*	DS1 Converter
TN577*	Packet Gateway	TN775B*	EPN Maintenance
TN722*	24-Channel DS1 Tie Trunk	TN780*	Tone-Clock
TN725B*	Speech Synthesizer	TN1648*	System Access/Maintenance
TN726*	8p Data Line	TN1650B*	32MB Memory
TN735*	4p MET Line	TN1655*	Packet Interface
TN736*	AC Power Unit (-5V)	TN1656*	Tape Drive
TN742*	8p Analog Line	TN1657*	Disk Drive
TN744*	Call Classifier/R2-MFC	TN2135	16p Analog Line
TN746*	16p Analog Line	TN2136	2w 8p Digital Line
TN747*	Analog CO Trunk	TN2138	Analog CO Trunk/PPM
TN748B*	Tone Detector	TN2139	DID Trunk
TN750	Integrated Announcement	TN2140	4w Analog Tie Trunk
TN752*	Power Unit (Neon/-5V)	TN2144	16p Analog Line
TN753*	DID Trunk	TN2146	DID Trunk
TN754*	8p Digital Line	TN2147	Analog CO Trunk
TN755*	Power Unit (Neon)	TN2148	Analog CO Trunk/PPM
TN758*	Pooled Modem	TN2149	16p Analog Line
TN760B*	4w Analog Tie Trunk	TN2169*	DEFINITY. AUDIX.

Continued on next page

Table 2-13. Generic 3r Circuit Packs — *Continued*

Code	Name	Code	Name
TN762B*	8p Hybrid Line	TN2180	16p Analog Line
TN763*	Auxiliary Trunk	UN330B*	Duplication Interface
TN767*	24-Channel DS1 Interface	UN331B*	Processor
TN768*	Tone-Clock	UN332*	MSS/Network Control
TN769*	8p Analog Line	WP-91153*	AC Power Unit (+5/-5/-48V)
TN771D*	Maintenance/Test		

Table 2-14. Generic 3r Circuit Packs

Type	Name	Code	Min Vin	Remarks
SPE				
	Disk Drive	TN1657	3+	
	Duplication Interface	UN330B	2+	Duplicated SPEs only
	Memory, 32MB	TN1650B	1+	2/SPE
	MSS/Network Control	UN332	6+	MSSNET
	Packet Interface	TN1655	4+	PKTINT
	Processor	UN331B	2+	
	System Access/Maintenance	TN1648	3+	SYSAM
	Tape Drive	TN1656	2+	
PNC				
	DS1 Converter	TN574	6+	For DS1-remoted EPNs
	Expansion Interface	TN570	8+	
	Switch Node Clock	TN572	4,6+	1 or 2/SN carrier
	Switch Node Interface	TN573	7+	
	Switch Node Terminator	AHF105	1+	4/carrier req on rear backplane
Service				
	Announcement	TN750	4+	1 max/system
	Announcement	TN750B	1+	1 max/system
	Call Classifier	TN744	1+	8 ports
	Speech Synthesizer	TN433		
	Speech Synthesizer	TN457		
	Speech Synthesizer	TN725B	1+	

Continued on next page

Table 2-14. Generic 3r Circuit Packs — *Continued*

Type	Name	Code	Min Vin	Remarks
Service *(cont'd.)*	Tone Detector	TN420		
	Tone Detector	TN748B	2+	
	Tone Detector	TN748C	4+	
	Tone Detector	TN748D	1+	
Clock				
	Tone-Clock	TN768	6+	1 or 2/PN
	Tone-Clock	TN780	3+	Req for Stratum-3 Clock and some tones
Maint				
	EPN Maintenance	TN775B	1+	1/EPN
	Maintenance / Test	TN771C	3+	
	Maintenance / Test	TN771D	4+	1 max/PN, req in PPN, req in Crit Rel EPNs
	System Access/Maintenance	TN1648	3+	SYSAM
Trunks				
	Auxiliary Trunk	TN417		
	Auxiliary Trunk	TN763	4+	4 port, B req for AUDICHRON
	Auxiliary Trunk	TN763B	1+	4 port
	Auxiliary Trunk	TN763C	2+	4 port
	Auxiliary Trunk	TN763D	3+	4 port
	CO Trunk, Analog	TN438		
	CO Trunk, Analog	TN465		
	CO Trunk, Analog	TN447		
	CO Trunk, Analog	TN747	4+	8 port, replace with TN747B for ACD
	CO Trunk, Analog	TN747B	1+	8 port, req for ACD

Continued on next page

Table 2-14. Generic 3r Circuit Packs — *Continued*

Type	Name	Code	Min Vin	Remarks
Trunks	CO Trunk, Analog	TN2138		
(cont'd.)	CO Trunk, Analog	TN2147		
	CO Trunk, Analog	TN2148		
	DID Trunk	TN436		
	DID Trunk	TN459		
	DID Trunk	TN753	3+	8 port
	DID Trunk	TN2139		
	DID Trunk	TN2146		
	DIOD Trunk	TN429		
	DS1 Interface	TN767	11+	24 channel, replaces TN722B
	DS1 Interface	TN767B	3+	
	DS1 Interface	TN464C	3+	24/32 channel, req for PRI
	DS1 Interface	TN464D		
	Tie Trunk, Analog	TN437		
	Tie Trunk, Analog	TN439		
	Tie Trunk, Analog	TN458		
	Tie Trunk, Analog	TN497		
	Tie Trunk, Analog	TN760	1+	4 port
	Tie Trunk, Analog	TN760B	3+	4 port, v6+ Req for CAS
	Tie Trunk, Analog	TN760C	2+	4 port
	Tie Trunk, Analog	TN760D	2+	4 port
	Tie Trunk, Analog	TN2140		

Continued on next page

Table 2-14. Generic 3r Circuit Packs — *Continued*

Type	Name	Code	Min Vin	Remarks
Trunks *(cont'd.)*	Tie Trunk, DS1	TN722	5+	
	Tie Trunk, DS1	TN722B	1+	v6+ req for CAS
Line				
	Analog Line	TN467		
	Analog Line	TN468		
	Analog Line	TN479		
	Analog Line	TN742	1-12, 16+	8 port
	Analog Line	TN746	12+	16 port
	Analog Line	TN746B	2+	16 port
	Analog Line	TN769	8+	8 port, neon lamp
	Analog Line	TN2135		
	Analog Line	TN2144		
	Analog Line	TN2149		
	Analog Line	TN2180		
	Digital Line	TN413		
	Digital Line	TN754	1-4,11+	8 port
	Digital Line	TN754B	2+	8 port
	Digital Line	TN2136		
	Hybrid Line	TN762	4+	8 port, req for 7300 sets
	Hybrid Line	TN762B	3+	8 port, req for 7300 sets
	ISDN BRI Line	TN556	6+	12 port, 24 port passive bus
	MET Line	TN735		

Continued on next page

Table 2-14. Generic 3r Circuit Packs — *Continued*

Type	Name	Code	Min Vin	Remarks
Data				
	Data Line	TN726	10+	8 port, B req for M2/M3 system ports
	Data Line	TN726B	1+	8 port, req for Mode2/Mode3
	Packet Data Line	TN553	2+	12 port EIA
	Packet Gateway	TN577	3+	4 port RS232
	Pooled Modem	TN758	2+	2 port
Power				
	Power Unit (Neon)	TN755	1+	With 631DA/DB, 644/45, WP-91153, 676B
	Power Unit (Neon)	TN755B	1+	With 631DA/DB, 644/45, WP-91153, 676B
	Power Unit (-5V)	TN736	2+	Use with 631AR/BR and 631WA/WB
	Power Unit (Neon/-5V)	TN752	1+	Use with 631AR/BR and 631WA/WB
MCC:	AC Power Unit (+5V)	631DA		
	AC Power Unit (-48/-5V)	631DB		
	AC Power Unit (+5V)	631AR		
	AC Power Unit (-48V)	631BR		TN736 or TN752 also req
	AC Power Unit (+5V)	631WA		
	AC Power Unit (-48V)	631WB		TN736 or TN752 also req

Continued on next page

Table 2-14. Generic 3r Circuit Packs — *Continued*

Type	Name	Code	Min Vin	Remarks
MCC *(cont'd.)*	DC Power Unit (+5V)	644A		
	DC Power Unit (-48/-5V)	645B		
SCC:	AC Power Unit (+5/-5/-48V)	WP-9115 3		
	DC Power Unit (+5/-5/-48V)	676B		
Misc				
	Current Limiter	CFY1	3+	CFY1B req for PPN, CFY1 ok for EPN
	Current Limiter	CFY1B	1+	1/PPN cab req
	Bus Terminator	AHF111	1+	2/carrier on rear backplane
	Lightwave Trnscvr	9823A		< 4,900 ft, must match opposite end
	Lightwave Trnscvr	9823B		< 25,000 ft, must match opposite end

Duplication: Reliability Options

The Generic 3r is available in three different options: Standard, High and Critical Reliability. Higher reliability is implemented by duplicating various components so that standby components can take over (interchange) when a failure occurs on an active component. Most interchanges take place with no disruption of current service, and allow for repairs to be made without disruption. Furthermore, duplication allows for upgrading and other maintenance of duplicated components and software without service disruption. The following sections describe which components are duplicated with each option.

Standard Reliability Option

On Standard Reliability systems, the 512-time-slot TDM bus is divided into two duplicate 256-time-slot buses, A and B. Call traffic is shared between the two buses. The first 5 time slots on each bus are reserved for the control channel, which is active on only one of the two buses at a time. Likewise, the next 17 time slots are reserved for carrying system tones. The tone times slot are not necessarily on the same bus (A or B) as the control channel. If any failure takes place that affects the ability of the active control or tone time slots to function, the other bus becomes active for those time slots. For more information, see TDM-BUS in Chapter 9, "Maintenance Object Repair Procedures" and the **set tdm** command in Chapter 8, "Maintenance Commands".

High Reliability Option

High Reliability systems duplicate components that are critical to the viability of the system as a whole to prevent a single failure from dropping all service:

- PPN control carrier and carrier power units (OLSs)
- All SPE circuit packs: Processor, Memory, MSSNET, Disk, Tape, SYSAM, and Duplication Interface
- PPN Tone Clock circuit pack (EPN Tone-Clocks are not duplicated)
- TDM buses (described above)

In addition to the above, the following are duplicated in Center Stage Switch (CSS) configurations:

- The PPN to CSS fiber link (consisting of the PPN Expansion Interface circuit packs, the Switch Node Interface circuit packs that connect to the PPN EIs, and cabling from the PPN EI to the CSS)
- Switch Node Clocks (SNCs) (two on each Switch Node carrier)

The duplicated SPEs operate in active/standby fashion. Operation of this duplication is described in Chapter 1, "Maintenance Architecture", STBY-SPE and DUP-CHL in Chapter 9, "Maintenance Object Repair Procedures", and under various other topics which are impacted by duplication. Interchanges of the SPE

and of PPN Tone-Clocks operate independently unless induced by use of the SPE-select switches (see “Executing a Planned SPE Interchange” in Chapter 5, 'Responding to Alarms and Errors"). The two SNCs on each Switch Node carrier also operate in an active/standby manner.

The duplicated fiber link between the PPN EIs and the CSS (the cable may actually be metallic) do not use an active/standby strategy. Instead, both links simultaneously carry active call traffic and control connectivity in an equally distributed load-sharing manner. If a component fails one of these fiber links, all connectivity over it on it is torn down, resulting in some dropped calls and control and application links. Links and subsequent call service is immediately re-established over the other EI fiber link.

Critical Reliability Option

Critical Reliability systems include all of the features of the High Reliability option described above. Additionally, the duplicate components of Port Network Connectivity (PNC) and other components critical to the viability of each EPN.

- Switch Node carriers and carrier power supplies (OLSs)
- Switch Node Interface (SNI) circuit packs
- Switch Node Clock (SNC) circuit packs (one on each duplicated Switch Node carrier)
- PPN *and* EPN Tone-Clock circuit packs
- PPN *and* EPN Expansion Interface circuit packs
- Each EPN contains a TN771D Maintenance/Test circuit pack
- Inter-PN cabling
- DS1 Converter Complexes (circuit packs, cabling and DS1 facilities used to connect remote EPNs)

The entire PNC (whether direct connect or CSS connected) is duplicated as a whole, forming two identical sets which each function as a whole (A-PNC and B-PNC). The two PNCs operate in an active/standby manner with all inter-PN calls set up on both PNCs so that the active can assume control without disruption of service. Operation of PNC duplication is described under PNC-DUP in Chapter 9, "Maintenance Object Repair Procedures".

The Tone-Clocks in each EPN operate in an active/standby manner independently from other duplication strategies.

Generic 3 Management Terminal

3

The Generic 3 Management Terminal (G3-MT) is used to enter commands and monitor operations through the maintenance user interface. The commands available to the maintenance user are described in Chapter 8, "Maintenance Commands". Throughout this book, the term management terminal is also used to refer to the G3-MT.

Terminals Supported

The following terminals can be used as G3-MTs:

- 715 BCS
- 513 BCT
- 4410 Data Terminal
- 4425 Data Terminal
- 610 BCT
- 615 MT
- DEC VT220
- G3-MA

Refer to *DEFINITY Communications System Generic 1 and Generic 3 Installation and Test,* 555-230-104, for instructions on setting up each type of terminal. See also the user manual for the specific model of terminal you are using. Printer connections and set-up sequences for the 715 BCS terminal are described in a later section of this chapter.

Multiple Access

G3r allows multiple users to perform maintenance and administration at the same time:

- Up to eight users can be logged in at one time, of which four are reserved for maintenance logins. If more than eight users at one time, attempt to log in to the switch once the connection is made they will receive a message indicating that the maximum number of logins has been exceeded.
- G3V3 provides enhanced login/password security by adding a security feature that allows the user to define their own logins/passwords and to specify a set of commands for each login. The system will allow up to 11 customer and 4 services logins to be administered, each login name can be customized and must be made up of from 3 to 6 alphabetic/numeric characters, or a combination of both. With the interdiction of administrable login ID It will be possible to change services login names. This is done by mapping the current services login levels to the new services login name you are administering. With the administrable login/password feature it is possible to have more than one of any level of service login except for init. You must enter a password for each login ID from 4 to 11 characters in length and containing at least 1 alphabetic and 1 numeric symbol. Password aging is an optional feature that the super-user administering the logins may activate. The password for each login can be aged starting with the date the password was created, or changed, and continuing for a specified number of days (number of days from 1 to 99). A user will be notified at login, 7 days before the password expiration day, that his/her password is about to expire. When the password expires the user will be required to enter a new password into the system before logging in. When a login is added or removed, the "Security Measurement" reports will not be updated until the next hourly poll, or a "clear measurements security-violations" command has been entered
- Login Security Violation Notification Following a Security Violation and Login Kill after "N" Attempts features will notify a referral point, and disable a login ID (Customer or AT&T Services logins) following a security violation (A user defined security violation threshold). The Login Kill after "N" Attempts feature will not disable the last remaining inads type login. AT&T Services logins require a AT&T init level login ID to re-enable logins that have been disabled by a security violation or the command disable login [login].
- ***Logoff Notification (G3V4)*** will alert system administrators, during log off from the system administration and maintenance interface, that features that present a significant security risk are enabled. A message will be displayed on the system administration /maintenance interface during logoff, if a security risk feature is enabled. Additionally the user can be required to acknowledge the notification before the logoff is completed
- G3V3 is delivered to the customer with one customer "super-user" login/password defined. The customer will be required to administer additional login/passwords as needed. The super-user login has full

customer permissions and can customize any login that they create. Login permissions for a specified login can be set by the super-user to block any object that can affect the health of the switch (up to 40 administration or maintenance objects (commands) can be blocked for a specified login). When an object (administrative or maintenance command) is entered in the blocked object list on the "Command Permissions Categories Restricted Object List" form, the associated administrative or maintenance actions cannot be performed by the specified login.

- Two maintenance logins are reserved for the SYSAM-RMT and SYSAM-LCL ports on the TN1648 SYSAM circuit pack located on PPN control carriers. SYSAM-RMT is a dial-up remote access port reserved for use by INADS. SYSAM-LCL is accessed by RS232 connectors on the TN1648. Two other maintenance users can log in via dial-up System Access Ports (SAPs) or by connecting directly to EPN Maintenance circuit packs.
- Up to five maintenance commands can run concurrently. Similarly, up to five administration commands can run concurrently. Some commands which use the same resources as others experience contention and cannot be run at the same time. For more information on contention, see “Contention between Simultaneous Commands” in the introduction to Chapter 8, "Maintenance Commands".

G3V3/G3V4 Commands

G3V3/G3V4 commands are grouped into three command categories. Each of the three command categories has a group of command subcategories listed under them, and each command subcategory has a list of command objects that the commands acts on. A super-user can set a users permissions to restrict or block access to any command in these categories. The three main categories are:

- Common Commands
  - Display Admin. and Maint. Data
  - System Measurements
- Administration Commands
  - Administer Stations
  - Administer Trunks
  - Additional Restrictions
  - Administer Features
  - Administer Permissions
- Maintenance Commands
  - Maintain Stations
  - Maintain Trunks

— Maintain Systems

— Maintain Switch Circuit Packs

— Maintain Process Circuit Packs

These categories are displayed on the Command Permissions Categories form.

Switch-Based Bulletin Board

This feature will allow a SAT user to leave messages in the system in order to communicate with other system users.

NOTE:
This feature is not intended as a substitute for the existing procedures for escalating problems, only as an aid to the existing process.

Description

The bulletin board service provides an easy interface for the customer and A T & T to leave messages on the system.

The bulletin board feature will make it very easy for the customer to communicate with AT&T (and vise versa). For example, when a new load is installed on a switch in the customer's system, AT&T will be able to leave the customer messages which describe new functionality. This feature will also allow AT&T to keep the customer informed on the progress of trouble items. In addition, the feature can be used by the customer to provide additional information concerning problems that have already been escalated by the normal procedure.

Accessing the Bulletin Board

Any user with the appropriate permissions can log into the system and have access to the bulletin board. User's who have "Maintain System" or "Administer Features" permissions can enter, change, display, print, or schedule to print a message. User's who have "Display Admin" and "Maintain Data" permission can display the bulletin board. Any user who has "Display" permission can display, print, and schedule to print the contents of the bulletin board.

When a user logs on to the system they will be notified if there are any messages on the bulletin board. The notification message will indicate the last time the bulletin board was updated, if any "High-Priority" message exist and if the bulletin board is 80% or more full. If a "High-Priority" message exists, the command prompt will change to the following message:

- `High-Priority Bulletin Board Messages Entered:`

After the next command is entered, the default command prompt will return to the screen.

User Considerations

- Only one user at a time may edit a message on the bulletin board.
- The user must have the proper permissions to access the bulletin board.
- The user must maintain the information stored on the bulletin board. It is the users responsibility to delete old messages. If the bulletin board is full any new messages overwrite old messages.

System Considerations

- The switch software must be G3V3/G3V4.
- The Bulletin Board feature provides up to 3 pages of text for each message. Each page is limited to 20 lines of text, and each line of text is limited to 40 characters per line. The first 10 lines of text on page 1 are reserved for AT&T Service's High-Priority messages.

System Bulletin Board Commands

The system commands "**change bulletin board**", "**display bulletin board**" and existing commands in the user interface are provided for use in the Switch Based Bulletin Board.

To edit or enter a message on the Switch Based Bulletin Board the user must:

1. Log into the system with "Maintain System or Administer Features" Permissions.
2. Enter the command "**change bulletin-board**".
3. Follow system prompts.

To display messages on the Switch Based Bulletin Board the user must:

1. Log into the system with "Maintain System", "Display Admin", or "Maint Data" permissions.
2. Enter the command "**display bulletin board**".
3. Follow system prompts.

Editing a Switch-Based Bulletin Board Message

A message may contain up to three pages of information. Message lines 1 through 10 on page 1 are reserved for AT&T Services *High-Priority* messages (the "init", "inads", and "craft" logins can edit the first 10 lines on page one). Pages 2 and 3 will allow up to 20 lines of text, each line of text may be up to 40 characters per line. Each line of text has an associated date field that is populated automatically by the system, each time the line is modified.

The control keys used to edit existing feature forms must be used to edit a message in the Switch Based Bulletin Board. The following characters are allowed for use in the text field:

- Uppercase/Lowercase letters, spaces, numerals, and !@#$%^ &*()_ -+=[]{};'"<>./?.

NOTE:
Tab characters are not allowed. The existing command line interface will cause the cursor to move to the next field if a Tab character is entered.

If a user changes any lines which cause two or more consecutive blank lines the bulletin board will be automatically reorganized (upon submittal). Two or more blank lines will be consolidated into a single blank line. If a blank line is at the top of a form it will also be deleted. This function will help prevent holes in the bulletin board screens as old entries are deleted.

To save a message entered into the bulletin board text field, the user must execute the "**save translation**" command.

G3V3 software is required for the bulletin board feature. The bulletin board feature as described in this document, is available in G3V4. The G3V3/G3V4 feature on the systems-parameters customers-options form need not be enabled.

The following screen, is an example of bulletin board massages between AT&T and a customer who is having trouble with trunk group translations:

```
display bulletin-board                    Page 1 of 3

                    Messages (* indicates high-priority)        Date
           *  AT&T is in the process of                       02/02/95
           * investigating your trunk lockup problem.         02/02/95
           * The Bulletin Board will be updated as            02/02/95
           * information is found.                            02/02/95
           *  We have identified the problem.                 02/02/95
           * The trunk you added does not provide             02/02/95
           * disconnect supervision, however your trunk       02/02/95
           * group was administered as such.                  02/02/95
           * Please call for details.                         02/02/95
           *
             We recently added a new trunk group (14)         02/03/95
             and have had trunk group members locking up.     02/03/95
             We see the error - Thanks for checking.          02/03/95
```

Switch Based Bulletin Board Message Notification

When a user logs on to the system they will be notified if there are any messages on the bulletin board. The notification message will indicate the last time the bulletin board was updated, if any “High-Priority” message exist and if the bulletin board is 80% or more full. If a “High-Priority” message exists, the command prompt will change to the following message:

```
High-Priority Bulletin Board Messages Entered:
```

After the next command is entered, the default command prompt will return to the screen.

To Log In

To log in to the switch:

1. Enter your login name and password on the login and password screen.

   If your password has expired you see the message:

   “Your password has expired, enter a new one.’’

   The password aging screen (Screen 3-1) is displayed when a user logs in. If the user’s password is expired, the user is prompted to enter a new password. If your password is within 7 days of the expiration date you see:

```
     Login: telmgr
     Password:
     Your Password has expired, enter a new one.
Reenter Current Password:
      Old Password:
      New Password:
     Reenter New Password:
```

Screen 3-1. Password Aging Screen

Forced Password Aging and Administrable Logins for G3V3 and Later Releases

G3V3 and later releases provide enhanced login/password security by adding a security feature that allows users to define their own logins/passwords and to specify a set of commands for each login. The system allows up to 11 customer logins. Each login name can be customized and must be made up of from 3 to 6 alphabetic/numeric characters, or a combination of both. A password must be from 4 to 11 characters in length and contain at least 1 alphabetic and 1 numeric symbol. Password aging is an optional feature that the super-user administering the logins can activate.

The password for each login can be aged starting with the date the password was created, or changed, and continuing for a specified number of days (1 to 99). The user is notified at the login prompt, 7 days before the password expiration date, that his/her password is about to expire. When the password expires the user is required to enter a new password into the system before logging in. If a login is added or removed, the “Security Measurement” reports are not updated until the next hourly poll, or a **clear measurements security-violations** command is entered. Once a non-super-user has changed his/her password, the user must wait 24 hours to change the password again.

G3V4 security is enhanced by providing a logoff notification screen to a system administrator when he/she logs off while either the facility test call or remote access features are still administered. The administrator can be required to acknowledge the notification before completing the logoff process. Logoff notification is administered on the Login Administration screen

G3V3 and later releases are delivered to the customer with one customer “super-user” login/password defined. The customer is required to administer additional login/passwords as needed. The super-user login has full customer permissions and can customize any login that he/she creates.

Login permissions for a specified login can be set by the super-user to block any object that may compromise switch security. In G3V3 or later releases up to 40 administration or maintenance objects commands can be blocked for a specified login in. In releases prior to G3V3, up to 20 administration or maintenance objects commands can be blocked for a specified login in. When an object (administrative or maintenance command) is entered in the blocked object list on the Command Permissions Categories Restricted Object List form, the associated administrative or maintenance actions cannot be performed by the specified login.

G3V3 and later releases commands are grouped into three command categories. Each of the three command categories has a group of command subcategories listed under them, and each command subcategory has a list of command objects that the commands acts on. A super-user can set a users permissions to restrict or block access to any command in these categories. The three main categories are:

- Common Commands
  - Display Admin. and Maint. Data
  - System Measurements
- Administration Commands
  - Administer Stations
  - Administer Trunks
  - Additional Restrictions
  - Administer Features

- — Administer Permissions
- Maintenance Commands
  - — Maintain Stations
  - — Maintain Trunks
  - — Maintain Systems
  - — Maintain Switch Circuit Packs
  - — Maintain Process Circuit Packs

These categories are displayed on the Command Permissions Categories form.

To Log In

To log in to the switch:

1. Enter your login name and password on the login and password screen (Screen 3-2).

   If your password has expired you see the message:

   `Your password has expired, enter a new one.`

   `Reenter current password:`

```
        Login: telmgr

    Password:
    Your Password has expired, enter a new one.

Reenter Current Password:

            New Password:

    Reenter New Password:
```

Screen 3-2. Password Expiration Screen

The Password Expiration screen is displayed when you log in. If your password is expired you are prompted to enter a new password. If your password is within 7 days of the expiration date you see:

`WARNING: Your password will expire in X days`

To Logoff

To logoff, enter “logoff” at the command prompt.

If facility test call notification or remote access notification are enabled for your login (see Adding Customer Logins and Assigning Initial Passwords, below), you will receive a logoff screen. If either the facility test call or remote access acknowledgments are required, you will need to respond to the “Proceed with Logoff?” prompt on the logoff screen. The response is defaulted to “n;” you will need to enter “y” to override the default.

CAUTION:
To leave the facility test call administered after you logoff poses a significant security risk.

CAUTION:
To Leave Remote Access feature administered after logging off poses a significant security risk if you are using the feature in conjunction with the Facility Test Call feature.

```
Facility Test Call Administered
Remote Access Administered

Proceed with Logoff? [n]
```

Screen 3-3. Logoff Screen

To Display a Login

To display a specified login:

1. Enter the command **display login [login name]** and press the Enter key.

   The system displays the requested login’s:

   - Name
   - Login type
   - Service level
   - Disable following a security violation value (V3)
   - Access to Inads Port value (V4)
   - Password aging cycle length
   - Facility test call notification and acknowledgment
   - Remote access notification and acknowledgment

To List Logins

To list all of the system logins and the status of each login:

2. Enter the command **list logins**.

   The system displays the following information for all current logins:

   - Name
   - Service level
   - Status (active, inactive, disabled, svn-disabled, void)
   - Password aging cycle length

   The system will display only those logins with the same, or lower, service level as the requestor.

To Remove a Login

To remove a login from the system:

1. Enter the command **remove login [login name]**.

   The system displays the Login Administration form.

2. Press the Enter key to remove the login, or press Cancel to exit the remove login procedure without making a change.

To Test a Login

1. Enter your login name at the login prompt.

```
Login: telmgr
Password:vvvvvvvvcf
```

Screen 3-4. Login Prompt Form

After the user enters the correct login name and password and the login is administered correctly, the system displays the command line interface.

Administering Customer Logins and Forced Password Aging for G3V3 and Later Releases

Adding Customer Logins and Assigning Initial Password

To add a customer login you must be a super-user, have administrative permissions, and:

1. Enter the **add login [name]** command to access the Login Administration form.
2. Enter your super-user password in the Password of Login Making Change field on the Login Administration form.

   The 3- to 6-character login name (characters 0-9, a-z, A-Z) entered with the **add login [name]** command is displayed in the Login's Name field.
3. Enter "customer" in the Login Type field. The system default for the Login Type field is "customer." The maximum number of customer logins of all types is 11.
4. Enter super-user or non-super-user in the Service Level field. Default is none-super-user.
   - "super-user" gives access to the **add, change, display, list,** and **remove** commands for all customer logins and passwords. The super-user can administer any mix of super-user/non-super-user logins up to a total of ten additional system logins.
   - "non-super-user" permissions are limited by restrictions specified by the super-user when administering the non-super-user login. A non-super-user can change his/her password with permission set by the super-user, however once a password has been changed the non-super-user must wait 24 hours before changing the password again. A non-super-user cannot change other user passwords, login characteristics, or permissions.
5. Enter "y" in the Disable Following a Security Violation field to disable a login following a login security threshold violation,. This field is a dynamic field and only appears on the Login Administration form when the SVN Login Violation Notification feature is enabled. The system default for the Disable Following a Security Violation field is "y."
6. Enter "y" in the Access to INADS Port? field to allow access to the remote administration port,. This field will only display if Acct. has first enabled customer super-user access to the INADS Remote Administration Port. Default is "n". This step is valid for G3V4 only.

7. Enter a password for the new login in the Login's Password field. A password must be from 4 to 11 characters in length and contain at least 1 alphabetic and 1 numeric symbol. Valid characters include numbers, and!&*?;'^(),.:- (the system will not echo the password to the screen as you type).
8. Re-enter the password in the Login's Password field. The system will not echo the password to the screen as you type.
9. Enter the number of days (1 to 99) from the current day, that you want the password to expire, in the Password Aging Cycle Length field. If a you enter a blank in this field, password aging does not apply to the login.
10. Decide whether or not to leave the default of yes ("y") in the Facility Test Call Notification? field. If you retain the default, the user will receive notification at logoff that the facility test call feature access code is administered. If you do not want the notification to appear, set the field to "n".

    CAUTION:
    Leaving The facility Test Call administered after logging off poses a significant security risk.

11. Decide whether or not to leave the default of yes ("y") in the Facility Test Call Notification Acknowledgment Required field. If you retain the default, the user will be required to acknowledge that they wish to logoff while Facility Test Call is still administered. If you do not want to force the user to acknowledge, set the field to "n". This field will appear only if the Facility Test Call Notification field is set to 'y"
12. Decide whether or not to leave the default of yes ("y") in the Remote Access Notification? field. If you retain the default, the user will receive notification at logoff that remote access is still administered. If you do not want the notification to appear, set the field to "n".

    CAUTION:
    To Leave Remote Access feature administered after logging off poses a significant security risk if you are using the feature in conjunction with the Facility Test Call feature.

13. Decide whether or not to leave the default of yes ("y") in the Remote Access Acknowledgment Required? field. If you retain the default, the user will be required to acknowledge that they wish to logoff while remote

access is still administered. If you do not want to force the user to acknowledge, set the field to “n”. This field will appear only if the Facility Test Call Notification field is set to 'y”.

```
                        LOGIN ADMINISTRATION

             Password of Login Making Change:

         LOGIN BEING ADMINISTERED
                             Login’s Name:xxxxxxx
                               Login Type:
                            Service Level:
   Disable Following a Security Violation?
                     Access to INADS Port?

       LOGIN’S PASSWORD INFORMATION
                       Login’s Password:
                Reenter Login’s Password:
             Password Aging Cycle Length:

     LOGOFF NOTIFICATION
       Facility Test Call Notification? y     Acknowledgment Required? y
            Remote Access Notification? y     Acknowledgment Required? y
```

Screen 3-5. Login Administration

Changing a Login’s Attributes

To change a customer login’s attributes you must be a super-user, have administrative permissions (specifically, the Administration Permission field must be set to “y” for the super-user), and:

1. Enter the **change login [name]** command to access the Login Administration form.
2. Enter your super-user password in the Password of Login Making Change field on the Login Administration form.

   The 3- to 6-character login name (characters 0-9, a-z, A-Z) entered with the **change login [name]** command is displayed in the Login’s Name field.
3. Enter “customer” in the Login Type field.
4. Enter “super-user” or “non-super-user” in the Service Level field.

   NOTE:
   You cannot change your own service level.

5. To disable a login following a login security threshold violation, enter “y” in the Disable Following a Security Violation field. This field is a dynamic field and only appears on the Login Administration form when the SVN Login Violation Notification feature is enabled.

6. To allow access to the remote administration port, enter “y” in the Access to INADS Port? field. This field will only display if AT&T has first enabled customer super-user access to the INADS Remote Administration Port and the G# version is V3 or later.
7. Enter a password for the new login in the Login’s Password field. A password must be from 4 to 11 characters in length and contain at least 1 alphabetic and 1 numeric symbol. Valid characters include numbers, and!&*?;’^(),.:- (the system will not echo the password to the screen as you type).
8. Re-enter the password in the Login’s Password field. The system will not echo the password to the screen as you type.
9. Enter the number of days (1 to 99) from the current day, when you wish the password to expire, in the Password Aging Cycle Length field. If a blank is entered in this field, password aging does not apply to the login.

Administering Login Command Permissions

Users with super-user permissions can set the permissions of the logins they create. The Command Permissions Categories form displays fields to which a user with super-user permissions can give or limit access. G3V3 and V4 commands are divided into three categories:

- Common Command
- Administration Commands
- Optional Maintenance Commands

Each of the three main categories have subcategories listed under them that when set to a “y” give permission to use the command sets associated with that category. When the Command Permissions Categories form is displayed for a login, the subcategories fields appear with the fields set to give the login full permissions for that login type. The super-user administering login permissions can set any of these field to deny access to a command category for the specified login. If the super-user making the assignments has full super-user permissions and would like to limit permissions for a category, the super-user can do so by entering “y” in the Additional Restrictions field located under the Administration Category section of the Command Permissions Categories form.

Refer to Table 3-1 through Table 3-5 later in this chapter for a list of command Objects and Actions by:

- Display Administration and Maintenance
- Administer Features
- Administer Permissions
- Administer Stations
- Administer Trunks

The information is the tables will help you to establish command permissions for user logins.

To administer command permissions, log in as super-user and:

1. Access the Command Permissions Categories form by entering the command **change permissions login [login name]**. When the Command Permission Categories form is displayed for a login, the default permissions for that “login type” are shown on the form. The super-user administering the login can change a “y” to “n” for each subcategory field on the form.
2. Select a category for the login and enter “y” in each field where permission to perform a administrative or maintenance action is needed. The command object you select must be within the permissions for the login type you are administering.

   If the Maintenance option is set to “y” on the Customer Options form, the super-user can enter “y” in the Maintain Switch Circuit Packs? or Maintain Process Circuit Packs fields.
3. A super-user with full super-user permissions (super-user administering the login cannot have the Additional Restrictions field set to “y” for his/her own login) can restrict additional administrative or maintenance actions for a specified login by entering “y” in the Additional Restrictions field on the Command Permission Categories form. Enter the additional restrictions for a login in the Restricted object list fields on the Command Permission Categories Restricted Object List form. In G3V3 and G3V4 you can enter up to 40 command names (object names) to block actions associated with a command category for a specified login; prior to G3V3 you can enter 20.

.

```
                                                                  Page 1 of 3
                        COMMAND PERMISSION CATEGORIES
                          Login Name: Sup3ru
COMMON COMMANDS
               Display Admin. and Maint. Data? y
                          System Measurements? _*

ADMINISTRATION COMMANDS
      Administer Stations? y            Administer Features? y
        Administer Trunks? y          Administer Permissions? y
  Additional Restrictions? n

MAINTENANCE COMMANDS
        Maintain Stations? n       Maintain Switch Circuit Packs? n
          Maintain Trunks? n      Maintain Process Circuit Packs? n
         Maintain Systems? n
```

Screen 3-6. Command Permission Categories (Page 1 of 3)

*This field is only displayed on the G3i (S or VS) systems.

```
                                                                  Page 2 of 3

                        COMMAND PERMISSION CATEGORIES
                           RESTRICTED OBJECT LIST
          ________________________        ________________________
          ________________________        ________________________
          ________________________        ________________________
          ________________________        ________________________
          ________________________        ________________________
          ________________________        ________________________
          ________________________        ________________________
          ________________________        ________________________
          ________________________        ________________________
          ________________________        ________________________
```

Screen 3-7. Command Permissions Categories (Page 2 of 3)

```
                                                          Page 3 of 3

                    COMMAND PERMISSION CATEGORIES
                       RESTRICTED OBJECT LIST
_________________________        _________________________
_________________________        _________________________
_________________________        _________________________
_________________________        _________________________
_________________________        _________________________
_________________________        _________________________
_________________________        _________________________
_________________________        _________________________
_________________________        _________________________
_________________________        _________________________
```

Screen 3-8. Command Permissions Categories (Page 3 of 3)

Table 3-1. Command Permissions Form Entries — Display Administration and Maintenance

Object	Action						
	Change	Display	List	Monitor	Remove	Status	Test
aar analysis		X	X				
aar digit-conversion		X	X				
aar route-chosen			X				
abbreviated-dialing 7103A-buttons		X					
abbreviated-dialing enhanced		X					
abbreviated-dialing group		X	X				
abbreviated-dialing personal		X	X				
abbreviated-dialing system		X					
aca-parameters			X				
access-endpoint		X	X			X	X
adjunct-names		X					
adjunt-controlled-agents		X					
administered-connection		X	X			X	
agent-loginID		X	X				
alarms		X					X
alias-station		X					

Continued on next page

Table 3-1. Command Permissions Form Entries — Display Administration and Maintenance — *Continued*

Object	Action						
	Change	Display	List	Monitor	Remove	Status	Test
alphanumeric-dial-table		X					
alternate-frl		X					
analog -testcall							X
announcements		X					
ars analysis		X	X				
ars analysis			X				
ars digit-conversion		X					
ars digit-conversion			X				
ars route-chosen			X				
ars-toll		X					
attendant		X	X				
bcms agent			X				
bcms loginIDs			X				
bcms split			X				
bcms trunk			X				
bcms vdn			X				
board							X
bri-port						X	
bridged-extensions			X				
bulletin-board		X					
button-location-aca		X					
cabinet		X	X				
call-forwarding			X				
call-screening		X					
capacity		X					
card-mem*						X	X
cdr-link						X	X
circuit-packs		X					
communication-interface hop-channels		X				X	
communication-interface links		X					

Continued on next page

Table 3-1. Command Permissions Form Entries — Display Administration and Maintenance — *Continued*

Object	Action						
	Change	Display	List	Monitor	Remove	Status	Test
communication-interface proc-channels		X				X	
configuration all			X				
configuration board			X				
configuration carrier			X				
configuration control			X				
configuration network			X				
configuration software			X				
configuration station			X				
configuration trunk			X				
console-parameters		X					
cor		X	X				
cos		X					
coverage answer-group		X	X				
coverage groups		X					
coverage path		X	X				
customer-alarm							X
data-module		X	X			X	X
dialplan		X					
digit-absorption		X					
display-format		X	X				
do-not-disturb group			X				
do-not-disturb station			X				
ds1		X					X
dsp-msg-auto-wakeup		X					
dsp-msg-call-identifier		X					
dsp-msg-date-time		X					
dsp-msg-lwc		X					
dsp-msg-mct		X					
dsp-msg-miscellaneous		X					
dsp-msg-property-mgmt		X					

Continued on next page

Table 3-1. Command Permissions Form Entries — Display Administration and Maintenance — *Continued*

Object	Action						
	Change	Display	List	Monitor	Remove	Status	Test
dsp-msg-softkey-label		X					
dsp-msg-tod-routing		X					
emergency			X				
enp-number-plan		X					
environment							X
errors		X					
events		X					
external-device-alarm							X
extension-type			X				
external-device-alarming							X
feature-access-code		X					
fiber-link**		X	X				
groups-of-extensions			X				
hardware-group						X	X
health						X	
history			X				
hunt-group		X	X				
inads-link							X
integrated-annc-boards		X	X				
intercom-group		X	X				
interface*						X	X
intra-switch-cdr		X	X				
isdn cpn-prefix		X					
isdn network-facilities		X					
isdn-testcall							X
isdn tsc-gateway		X					
ixc-codes		X					
journal-printer							X
led							X
link						X	X
listed-directory-numbers		X					

Continued on next page

Table 3-1. Command Permissions Form Entries — Display Administration and Maintenance — *Continued*

Object	Action						
	Change	Display	List	Monitor	Remove	Status	Test
login						X	
login***			X				
login-ids		X					
maintenance							X
marked-port			X				
mct-group-extensions		X					
mct-history			X				
meas-selection coverage		X					
meas-selection principal		X					
meas-selection route-pattern		X					
meas-selection trunk-group		X					
meas-selection wideband-trunk-grp		X					
measurements security-violations detail			X				
measurements security-violations summary			X				
memory							X
MO							X
modem-pool		X	X				X
multi-frequency signaling		X					
network-control							X
node-routing		X	X				
packet-control*						X	X
packet-interface**						X	
paging code-calling-ids		X	X				
paging-loudspeaker		X					
password	X						
periodic-scheduled						X	
permissions		X					
personal-CO-line		X	X				
pgate		X	X				
pickup-group		X	X				

Continued on next page

Table 3-1. Command Permissions Form Entries — Display Administration and Maintenance — *Continued*

Object	Action						
	Change	Display	List	Monitor	Remove	Status	Test
pkt							X
pms						X	
pms-down			X				
pms-link							X
pms-log						X	
pnc						X	
port		X					X
port-network**						X	
pri-endpoint		X	X			X	X
processor							X
remote-call-coverage	X						
report-scheduler	X		X		X		
rhnpa		X					
route-pattern		X	X				
routing-table		X	X				
scr				X			
second-digit		X					
security-violations				X			
set-data			X				
signaling-group		X	X			X	X
sit-treatment		X					
site-data		X					
skill				X			
sp-link						X	X
spe						X	
stargate-port						X	
station		X	X				X
svn-button-location		X					
switch-node**						X	
synchronization		X				X	X
sys-link			X			X	

Continued on next page

Table 3-1. Command Permissions Form Entries — Display Administration and Maintenance — *Continued*

Object	Action						
	Change	Display	List	Monitor	Remove	Status	Test
system				X			
system 1st-cabinet						X	
system 2nd-cabinet						X	
system 3rd-cabinet						X	
system all-cabinets						X	
system conn				X			
system customer-options		X					
system features		X					
system-maintenance		X					
system-parameters cdr		X					
system-parameters country-options		X					
system-parameters duplication**		X					
system-parameters hospitality		X					
system-parameters security		X					
tdm							X
term-ext-group		X	X				
terminal-parameters 603/302B1		X					
terminal-parameters 8400		X					
test-schedule		X	X				
time		X					
time-of-day		X					
toll		X					
toll all			X				
toll restricted-call			X				
toll toll-list			X				
toll unrestricted-call			X				
tone-clock							X
trunk				X		X	X
trunk-group		X	X			X	
trunk-group-history			X				
trunk-group-members			X				

Continued on next page

Table 3-1. Command Permissions Form Entries — Display Administration and Maintenance — *Continued*

Object	Action						
	Change	Display	List	Monitor	Remove	Status	Test
tsc-administered							X
tti						X	
udp		X					
udp			X				
unstaffed-agents			X				
usage button-type hunt-ns			X				
usage button-type night-service			X				
usage-extensions			X				
usage-hunt			X				
vdn		X	X	X			
vector		X	X				
wakeup incomplete			X				
wakeup requests			X				
wakeup station			X				
wakeup-log						X	

* Intel only.

** MIPS only.

*** Must be super-user

Table 3-2. Command Permissions Form Entries — Administer Features

Object	Action																
	Add	Backup	Busyout	Change	Clear	Copy	Disable	Display	Duplicate	Enable	Erase	List	Release	Remove	Restore	Save	Set
adjunct-names**				X													
adjunt-controlled-agents				X													
administered-connection	X			X			X		X	X				X			
agent-loginID	X			X										X			
alphanumeric-dial-table				X													
alternate-frl				X													
announcements						X					X				X	X	
authorization-code				X				X				X					
bulletin-board				X													
cabinet**	X			X										X			
call-screening				X													
circuit-packs				X													
communication-interface hop-channels				X													
communication-interface links				X													
communication-interface processor-channels				X													
cor				X													
cos				X													
coverage answer-group	X			X										X			
coverage-path	X			X										X			
dialplan				X													
disk**		X													X		
display-format				X													
ds1	X			X										X			
dsp-msg-auto-wakeup				X													
dsp-msg-call-identifier				X													
dsp-msg-date-time				X													
dsp-msg-lwc				X													
dsp-msg-mct				X													
dsp-msg-miscellaneous				X													

Continued on next page

Table 3-2. Command Permissions Form Entries — Administer Features — *Continued*

Object	Action																
	Add	Backup	Busyout	Change	Clear	Copy	Disable	Display	Duplicate	Enable	Erase	List	Release	Remove	Restore	Save	Set
dsp-msg-property-mgmt				X													
dsp-msg-softkey-label				X													
dsp-msg-tod-routing				X													
enp-number-plan				X													
external -defice-alarm	X			X										X			
feature-access-codes				X													
fiber-link**	X			X										X			
hunt-group	X			X										X			
intercom-group	X			X										X			
intra-switch-cdr	X			X													
isdn cpn-prefix				X													
isdn-network-facilities				X													
isdn-tsc-gateway				X													
isdn-private-numbering				X													
isdn-public-unknown-nmbr																	
ixc-codes				X													
listed-directory-numbers				X													
login-ids	X			X													
mct-group-extensions				X													
meas-occ-busiest-intrvl				X													
meas-selection coverage				X													
meas-selection principal				X													
measurements security-violations					X												
mis			X										X				
multi-frequency signaling				X													
music-source				X													
node-routing				X													
paging code-calling-ids				X													
paging-loudspeaker				X													
pgate	X			X										X			

Continued on next page

Table 3-2. Command Permissions Form Entries — Administer Features — *Continued*

Object	Action																
	Add	Backup	Busyout	Change	Clear	Copy	Disable	Display	Duplicate	Enable	Erase	List	Release	Remove	Restore	Save	Set
pickup-group	X			X										X			
remote-access							X			X							
remote-call-coverage								X									
second-digit	X			X										X			
signaling-group	X			X										X			
sit-treatment				X													
site-data				X													
synchronization				X													
system-cdr				x													
system-parameters country-options				X													
system-parameters features				X													
system-parameters hospitality				X													
system-parameters security				X													
tenant				X													
term-ext-group	X			X										X			
test-schedule	X			X										X			
time																	X
translations																X	
udp				X													

** MIPS only.

Table 3-3. Command Permissions Form Entries — Administer Permissions

Object	Action				
	Add	Change	Display	Enable	Remove
login	X	X	X	X	X
permissions		X			

Table 3-4. Command Permissions Form Entries — Administer Stations

Object	Action			
	Add	Change	Duplicate	Remove
abbreviated-dialing 7103A-buttons	X	X		X
abbreviated-dialing enhanced	X	X		X
abbreviated-dialing group	X	X		X
abbreviated-dialing personal		X		X
abbreviated-dialing system	X	X		X
alias-station		X		
attendant	X	X		X
console-parameters				
data-module	X	X	X	X
routing-table	X	X		X
station	X	X	X	X
terminal-parameters 603/302B1		X		
terminal-parameters 8400		X		
vdn	X	X		X
vector		X		

Table 3-5. Command Permissions Form Entries — Administer Trunks

Object	Action				
	Add	Change	Display	Duplicate	Remove
aar analysis		X			
aar digit-conversion		X			
access-endpoint	X	X		X	X
announcements		X			
ars analysis		X			
ars digit-conversion		X			
ars toll		X			
digit-absorption		X			
meas-selection route-pattern		X			
meas-selection trunk-group		X			
meas-selection wideband-trunk-grp		X			
modem-pool	X	X			X
personal-CO-line	X	X			X
pri-endpoint	X	X		X	X
remote-access		X	X		
rhnpa		X			
route-pattern		X			
time-of-day		X			
toll		X			
trunk-group	X	X			X

Connecting the G3-MT

The management terminal can be connected to the system in the following ways:

- SYSAM-LCL Port

  The management terminal can be connected directly to the SYSAM-LCL port of the TN1648 System Access and Maintenance (SYSAM) circuit pack in the PPN control carrier (or SPE). Two RS-232 connectors are located on the rear panel of the PPN control carrier beneath the label TERMINAL. To access the maintenance user interface running on the active SPE, connect an M25B (EIA) cord to the connector labeled ACTIVE. Connect the other end to the connector on the 715 BCS labeled P2(DCE). On most other terminals, use the connector labeled MAIN PORT. A null modem is not required for these ports. More information on setting up the 715 BCS is given in following sections of this chapter.

  On systems with duplicated SPEs, there are two PPN control carrier and two identical sets of connectors. Either connector labeled ACTIVE can be used, regardless of which SPE is active. The STANDBY connectors are described below.

- SYSAM-RMT Port (RAP)

  One login can access the system by dialing in to the SYSAM-RMT port with a modem operating at either 1200 or 2400 bps. This port is reserved for INADS (Initialization and Administration System) access.

  Logging In When The SPE Is In SPE Down Mode

  If the system is in SPE down mode when the RAP Terminal displays "login", enter INADS as the RAP login/name. Use the first INADS type password as your RAP password.

  NOTE:
  You must identify the first INADS login before the system is in SPE down mode. The first INADS type login may be identified by entering the **list login** command and noting the first INADS login listed.

- System Ports

  Terminals can log in via system ports (also known as system access ports or SAPs) if the system is so equipped. The connection is made by dialing in to a to a data port located on a data line circuit pack that is administered as a system port. This type of port is identified by the entry `Type: system port` on the data module form. These ports operate at 9600 bps. For more information on system ports, see PDATA-PT in Chapter 9, "Maintenance Object Repair Procedures" and *DEFINITY Communications System Generic 3 V2 Implementation,* 555-230-653.

- EPN Maintenance Circuit Pack

  Terminals can log in to the system by directly connecting to the TN775 Maintenance circuit pack in each Expansion Port Network. Connect an M25B (EIA) cord to the RS-232 connector labeled TERM on the rear panel of the expansion control carrier. This connection operates at a slower speed because it communicates over system control links shared with call processing messages. The bit rate is limited to about 1000 bps. This type of connection is useful for performing maintenance on a remotely located EPN.

- Standby SPE Connection

  With duplicated SPEs, there are two SYSAM connectors on each PPN control carrier (A and B). Either carrier's connectors may be used. Either ACTIVE connector will always access the active SPE regardless of which carrier is active. Either STANDBY connector accesses the standby SPE through the SPE-Down interface. This interface is available when the SPEs are locked by the SPE-Select switches on a system with duplicated SPEs. Otherwise the STANDBY connection is inactive. (On a simplex SPE, this interface is accessed when the SPE is down through the ACTIVE connector). Separate terminals may be connected to the two connectors, or one terminal may be switched back and forth between connections. The unused connectors should be capped.

The SPE-down interface can only be accessed by SYSAM-LCL or SYSAM-RMT connections. This interface is described in *Initialization and Recovery*.

Setting up the 715 BCS Terminal

The power-on default options on the 715 BCS terminal should provide correct operation as a G3-MT. Use the connector on the back of the terminal labeled P2(DCE), and select the default terminal selection, [513], when logging in. If problems are encountered, the terminal's parameters can be changed via the Setup menu which is accessed by pressing Cntl + F1 at any time. From this menu, various sub-menus are available. Function and arrow keys are used to make selections which then must be save by pressing F5 while back in the Setup menu. The current definition of each function key is displayed at the bottom of the screen. To restore default values, use the following series of keystrokes:

1. Cntl + F1 to select the Setup menu
2. F7 to restore default values
3. F5 to save the selection
4. F1 to exit the Setup menu and return to management terminal mode

At the end of the sequence a P2 should appear at the bottom center of the screen indicating the active port used to connect to the switch. Note that the autowrap option must be **off** and the font should be set to **large**.

You can program a ‘‘Go To Page’’ key on 715 BCS terminals which do not have an OPTS key. Access the Function Key sub-menu from the Setup menu. Program a function key to send the sequence: **[ESC]Or** where [ESC] represents the Escape key and O is the capital letter O.

Serial Printer Connection

For serial printer operation, connect the printer to the connector on the back of the 715 BCS terminal labeled P1(DCE). A null modem is not required. Set the printer for 9600 baud, 7 data bits and 1 stop bit. These are the default settings for the 715 BCS. If necessary, terminal settings for serial printer operations can be changed via the Communication Options sub-menu of the Setup menu.

Parallel Printer Connection

For parallel printer operation, connect the printer to the connector labeled with the printer icon. To enable parallel printer operation, use the following series of keystrokes.

1. Cntl + F1 to access the Setup menu
2. F4 to select the User Preferences sub-menu
3. Down arrow to the Parallel Port field
4. F4 to enable the option
5. F1, F5, F1 to return to Setup, save selections, and exit

System Login Procedure

G3V3/G3V4 provides enhanced login/password security by adding a security feature that allows the user to define their own logins/passwords and to specify a set of commands for each login. The system will allow up to 11 customer and 4 services logins to be administered, each login name can be customized and must be made up of from 3 to 6 alphabetic/numeric characters, or a combination of both. With the interdiction of administrable login ID It will be possible to change services login names. This is done by mapping the current services login levels to the new services login name you are administering. With the administrable login/password feature it is possible to have more than one of any level of service login except for init. You must enter a password for each login ID from 4 to 11 characters in length and containing at least 1 alphabetic and 1 numeric symbol. Password aging is an optional feature that the super-user administering the logins may activate. The password for each login can be aged starting with the date the password was created, or changed, and continuing for a specified number of days (number of days from 1 to 99). A user will be notified at login, 7 days before the password expiration day, that his/her password is about to expire. When the password expires the user will be required to enter a new password into the system before logging in. When a login is added or

removed, the "Security Measurement" reports will not be updated until the next hourly poll, or a "clear measurements security-violations" command has been entered

Login Security Violation Notification Following a Security Violation and Login Kill after "N" Attempts features will notify a referral point, and disable a login ID (Customer or AT&T Services logins) following a security violation (A user defined security violation threshold). The Login Kill after "N" Attempts feature will not disable the last remaining inads type login. AT&T Services logins require a AT&T init level login ID to re-enable logins that have been disabled by a security violation or the command disable login [login].

Logoff Notification (G3V4) will alert system administrators, during log off from the system administration and maintenance interface, that features that present a significant security risk are enabled. A message will be displayed on the system administration /maintenance interface during logoff, if a security risk feature is enabled. Additionally the user can be required to acknowledge the notification before the logoff is completed

G3V3 is delivered to the customer with one customer "super-user" login/password defined. The customer will be required to administer additional login/passwords as needed. The super-user login has full customer permissions and can customize any login that they create. Login permissions for a specified login can be set by the super-user to block any object that can affect the health of the switch (up to 40 administration or maintenance objects (commands) can be blocked for a specified login). When an object (administrative or maintenance command) is entered in the blocked object list on the Command Permissions Categories Restricted Object List form, the associated administrative or maintenance actions cannot be performed by the specified login.

G3V3 commands are grouped into three command categories. Each of the three command categories has a group of command subcategories listed under them, and each command subcategory has a list of command objects that the commands acts on. A super-user can set a users permissions to restrict or block access to any command in these categories. The three main categories are:

- Common Commands
  - Display Admin. and Maint. Data
  - System Measurements
- Administration Commands
  - Administer Stations
  - Administer Trunks
  - Additional Restrictions
  - Administer Features
  - Administer Permissions
- Maintenance Commands

— Maintain Stations

— Maintain Trunks

— Maintain Systems

— Maintain Switch Circuit Packs

— Maintain Process Circuit Packs

These categories are displayed on the Command Permissions Categories form.

Logging On

To log in to the system:

1. Connect and power up the G3-MT. The screen will display:

   `login:`

2. Enter your login name, and press the RETURN key. The screen will display:

   `password:`

3. Enter your password, and press the RETURN key.

   For security reasons, the password is not displayed as you type it. The system verifies that a valid login and password name were entered. If an invalid login or password name was entered, the screen displays:

   `login incorrect:`

   In this case you must repeat the procedure. If your password has expired or is within 7 days of the expiration day, you see a error message:

   `Your Password has expired; enter a new one`

   `Old Password:`

   `New Password:`

   `WARNING: your password will expire in xx days`

   If the system recognizes the login and password name, the screen displays the software version number followed by the prompt:

   `Terminal Type (Enter 513, 4410, 4425, or VT220): [513]`

4. Depending on your terminal type, enter one of the following and press ENTER.

Terminal Type	Entry
513 BCT	513 (default)
715 BCS	513 (default)
4410 Data Terminal	4410
4425 Data Terminal	4425
DEC VT220	VT220
610 BCT or 615 MT with 513 emulation cartridge	513 (default)
610 BCT or 615 MT without 513 emulation cartridge	4410

5. You can deactivate INADS alarm origination whenever you log in as craft. After you supply the terminal type information requested, the system will display the following if alarm origination is activated on the Maintenance System-Parameters screen:

   ```
   Suppress Alarm Origination: [y]
   ```

   The default answer is yes. If you do NOT wish to suppress alarm origination, enter **no**. Any other entry will default to yes. The **test inads-link** command will work regardless of whether you have overridden INADS alarm origination.

6. The screen will display:

   ```
   enter command:
   ```

   The system is now ready to execute maintenance commands. Press the HELP key to display a list of all valid entries.

   If you have a High-Priority Bulletin Board Message the command line prompt will include the following notification to all users who are logged in:

   ```
   -High-Priority Bulletin Board Messages Entered:
   ```

Logging Off

The terminal should be logged off whenever it is not in use to avoid accidental or malicious entries that could corrupt translations or disrupt operations. This also re-enables INADS alarm origination so that alarms will not go unreported.

To log off, simply enter **logoff** at the command prompt. The screen should then display:

```
login:
```

If no entry is made for 30 minutes during a craft login, the system automatically times out and terminates the login. At that time, any unresolved alarms that have not been reported to INADS will be reported. If you are logged in at more than one G3-MT terminal, the system waits until the last terminal times out or logs off before reporting such alarms to INADS.

Logoff Notification (G3V4) will alert system administrators, during log off from the system administration and maintenance interface that features, that present a significant security risk are enabled. A message will be displayed on the system administration /maintenance interface during logoff, if a security risk feature is enabled. Additionally the user can be required to acknowledge the notification before the logoff is completed

Command Line Details

After a successful login, the terminal displays `enter command:` at the bottom of the screen and waits for a command entry.

A command is made up of multiple words that are typed on the keyboard and instruct the system to perform a particular task. The system's command structure is made up of the following format: Action, Object, and Qualifier.

The first word entered is the action the command executes such as test, display, or reset. The second word entered is the object to which the action is applied, such as station, board, or system. Qualifiers modify the action, further identify the object, or supply options affecting execution or output. Some are required, others are optional. Some commands require additional information to be entered on a screen form consisting of several fields. Pressing HELP brings up a menu displaying all available entries. If part of a command has already been typed or if an invalid entry has been made, all valid entries for completing the command are displayed. General command line syntax and complete descriptions of each command appear in Chapter 8, "Maintenance Commands". The functions of special keys are listed in Table 3-6 on page 3-38.

G3-MT Keyboard Definitions

Table 3-6 describes the operation of specific keys on the various terminals that can be used as a G3-MT. Function keys are denoted as F1, F2, and so on. The current function of each function key is displayed at the bottom of the screen. A "+" in the following table means that two keys must be pressed simultaneously.

- The 715 column assumes that the 715 BCS is set in "BCS" emulation mode.
- The 513 column applies to a 610 or 615 MT with a 513 emulation cartridge installed, as well as to the 513.

- The 4410 column applies to a 610 or 615 MT without a 513 emulation cartridge installed, as well as to the 4410.

Table 3-6. G3-MT Keyboard Definitions

Action	715	513	4410	4425	VT220
Help This key displays all valid entries for the field under the cursor. When used at the command line, all valid commands, or all valid qualifiers for a specified command are displayed.	Help	HELP	F5	F5	Help
Execute a Command This key enters the information entered on a screen form and causes the system to execute the specified command with those parameters.	Enter	ENTER	F3	F3	Do
Erase Screen/Cancel Command This key erases the form currently displayed and/or cancels execution of a command. The user is returned to the command line and prompted for a new command entry. See also Refresh Screen.	Cancel	CANCL	F1	F1	Remo ve
Move Cursor To add or change information to a field on a screen form, the cursor must be positioned in that field. The arrows move the cursor within or between fields. The cursor will wrap from the bottom of a screen to the top and vice versa. See also the following actions for changing fields.	Arrow keys	Arrow keys	Arrow keys	Arrow keys	Arrow keys
Next Field This key moves the cursor to the next field on the currently displayed page. The cursor will wrap from the bottom of the page to the top of the same page.	TAB or Return	TAB	TAB	TAB	F18

Continued on next page

Table 3-6. G3-MT Keyboard Definitions — *Continued*

Action	715	513	4410	4425	VT220
Previous Field This key moves the cursor to the previous field on the currently displayed page. The cursor will wrap from the top of the page to the bottom of the same page.	Shift + TAB	Shift + TAB	Shift + TAB	Shift + TAB	F17
Erase a Field This key clears all data in the field under the cursor. See also Erase Screen/Cancel Command. The BACKSPACE key works in the usual manner.	SHIFT + Clear Home	SHIFT + CLEAR RFRSH	F4	F4	F19
Refresh Screen This key erases all fields and redraws the same screen form currently displayed.	Clr/ Rfrsh F2	CLEAR RFRSH F2	F20		
Display Next Page This key displays the next page of a screen form consisting of several pages.	Page Down	PAGE	F7	F7	Next Scree n
Display Previous Page This key displays the previous page of a screen form consisting of several pages.	Page Down	SHIFT + PAGE	F8	F8	Previo us Scree n
Update Screen This key updates the current status information displayed by monitor commands such as **monitor health**.	F6	F6	F6	F6	Find
Go To Page Followed by a page number, this key displays the specified page of a screen form that consists of multiple pages. To use this function on a 715 BCS without an Opts key, see "Setting up the 715 BCS Terminal" on page 3-32 in this chapter.	Opts or program-med function key	OPTS	GO TO PAGE	GO TO PAGE	

* Intel only

** MIPS only

*** Must be super-user

Initialization and Recovery

4

When the system is powered up, or when it experiences a catastrophic fault that interrupts its basic functions, it undergoes a reboot. In addition to reboot, there are several less severe resets available for the system to recover from less disrupting errors. The technician can also initiate these resets with a command.

CAUTION:
System resets can have wide-ranging disruptive effects. Unless you are familiar with resetting G3r systems, follow normal escalation procedures before attempting a demand reset.

If a given reset fails to recover normal system operation, the firmware that controls reset will escalate to the next higher level, up to reboot if necessary. A failure to reboot results in SPE-down mode, which is described in a following section of this chapter.

This chapter describes the causes, effects, and duration of each reset level. The service effects described are those experienced when the active SPE undergoes the reset. In a system with duplicated SPE, the standby SPE can undergo a reset without disrupting service since the active SPE remains in control. These resets can also be requested with the corresponding **reset standby-spe** *level* commands. All standby resets turn off memory shadowing, leaving the standby SPE temporarily unavailable for service. Refresh of the standby typically takes several minutes.

When resets occur, including interchanges, an error is logged against maintenance object SYSTEM. The error code gives information about the cause of the reset. Information about the reset is also logged in the initcauses log. See **display initcauses** in Chapter 8, "Maintenance Commands".

The EPNs can also undergo individual resets. These are described in EXP-INTF and EXP-PN in Chapter 9, "Maintenance Object Repair Procedures". PNC interchanges are described under PNC-DUP in Chapter 9, "Maintenance Object Repair Procedures", and under **reset pnc interchange** in Chapter 8, "Maintenance Commands".

Hot Restart

This reset occurs only on a duplicated SPE during a *planned* SPE interchange.

Duration	Up to 1.5 minutes
Causes	**reset system interchange** command
	(use of the **contention-override** or **health-override** options causes a reset level 1 or higher)
	SPE interchange requested by scheduled maintenance
Effects	Call service is unaffected.
	Yellow LEDs light on new active SPE and go out on the new standby.
	Memory shadowing is turned off.
	Remote access port (SYSAM-RMT) login is dropped.

Reset Level 1 (Warm Restart)

Duration	Up to 10 seconds, typically 2 seconds
Causes	**reset system 1** command
	Spontaneous SPE interchange (those caused by hardware faults)
	Software faults that are non-service affecting
	Abort of planned SPE interchange
	Hardware bus errors
	TN1655 Packet Interface faults
Effects	Stable calls are preserved.
	System links, and stable feature and service state data are preserved.
	Error and alarm logs are preserved, but all alarms are resolved except for STBY-SPE and busyouts.
	Transient calls (not yet connected), and some user stimuli, are dropped.
	New calls are not processed during the reset.
	G3-MT logins, including remote access and system port logins, are dropped.
	If the reset resulted from a spontaneous SPE interchange, memory shadowing is turned off, and the standby SPE will not be available for service until memory is refreshed (several minutes).
	Application links such as those to AUDIX and CDR are dropped and reestablished in under 2 1/2 minutes. (BX.25 links are not dropped, and CDR data is buffered during the outage.)
	MSS activity is aborted.
	Translation data is preserved, but if translation changes were in progress, the reset is escalated to Reset Level 3 (Cold-1).
	If core dump is enabled for this reset level, reset is delayed until the core dump is complete.

Reset Level 2 (Cold-2 Restart)

Duration	Up to 3.75 minutes
Causes	**reset system 2** command
	Escalation from reset level 1

An attempted reset level 1 during a PNC interchange

TDM-bus clock recovery on the PPN

Spontaneous interchange into an unrefreshed standby SPE

Effects **All system and application links are dropped**.

All calls are dropped.

Non-translation feature data, such as Automatic Wakeup calls, are lost and must be reentered.

All G3-MT logins, including remote access and system port logins, are dropped.

Initialization firmware runs diagnostics and displays results on the G3-MT screen.

SPE memory shadowing is turned off, leaving the standby SPE unavailable for service for several minutes.

All hardware components, except PNC components, are reset, including the EPNs. All standby Expansion Interfaces, and the active EI in the PPN are reset. SNIs, SNCs, DS1Cs and active EIs in the EPNs are not reset.

If the PNC is duplicated, a global refresh of the standby PNC is performed after the reset.

All busied out maintenance objects are released and must be rebusied, if so desired.

Circuit packs are reinitialized, (translations are verified by comparison to physical board locations).

If core dump is enabled for this reset level, reset is delayed until the core dump is complete.

Error and alarm logs are preserved, but all alarms are resolved except for STBY-SPE and busyouts.

Reset Level 3 (Cold-1 Restart)

Duration	Up to 6.5 minutes
Causes	**reset system 3** command
	Escalation from reset level 2
	Translation loading fault
	Spontaneous interchange into an unrefreshed standby SPE
Effects	Actions and effects are the same as for reset level 2, plus the following:
	Emergency transfer is invoked.
	Translations are reloaded from disk or tape.
	If core dump is enabled for this reset level, reset is delayed until the core dump is complete.
	Translations entered by users since the last **save translation** was executed by command or by scheduled maintenance are lost.

Reset Level 4 (Reboot)

Duration	Up to 11 minutes, typically 8 minutes
Causes	**reset system 4** command
	Escalation from reset level 3
	Power up
	Recovery attempt from SPE-down mode (requested by **reboot** command, or automatically every 20 minutes)
	Spontaneous interchange into an unrefreshed standby SPE
Effects	System software (boot image) is reloaded, and all processes are reinitialized.
	The disk, if present and healthy, is the default device from which the software is loaded. Otherwise, the reload is taken from tape.
	Before reboot, the system attempts to save the alarm and error logs to the disk on the active SPE.
	After reboot, error and alarm logs are restored from the SPE that is active coming out of the reboot. (Note that this means that some error and alarm information may be lost if the last save before the reboot save does not succeed or if an SPE interchange takes place).

Other effects are the same as those in reset level 3, except that more extensive diagnostics are performed.

If reboot fails, SPE-down mode is invoked.

If a core dump is enabled for this reset level via the **set vector** command, the reboot is delayed until the core dump has completed.

Reset Level 5 (Extended Reboot)

Duration	Up to 25 minutes
Causes	**reset system 5** command
	This reset is invoked only by command
Effects	Effects are the same as for a level 4 reboot except that more extensive diagnostics are performed.
	This reset is used to diagnose SPE component failures not detected by level 4 reboot tests.

Initialization Diagnostics

For each reset level, the system performs a series of diagnostic tests on components of the SPE to confirm that the system can be brought into service. The management terminal displays the result of each test as it occurs. If a reboot fails, and the system cannot bring itself up, SPE-down mode is invoked. A description of this mode, with troubleshooting procedures available to it, appears in the following section.

Table 4-1 shows the diagnostic tests run during initializations. Level 1, 2 and 3 resets 4 perform the first 11 tests (through the Timer Test). Reboots complete all tests in the table except the last one. Only extended reboots execute the Memory Board Couple Test.

If a test fails, make the indicated repair. If more than one repair is indicated, perform them in the order shown until the problem is resolved. Follow procedures described in “Replacing SPE Circuit Packs” in Chapter 5, "Responding to Alarms and Errors".

Table 4-1. Initialization Diagnostics for All Reset Levels

Error Code	Description/ Recommendation
Internal Register Test	Replace processor.
Loop Data Test	Replace processor. Replace memory 1. Reseat all circuit packs in the processor carrier except SYSAM. The carrier may be defective. Follow normal escalation procedures.
Duart Test	Replace the processor board. Failure of this test will not prevent the system from running, but the processor is probably faulty.
Rom Checksum Test	Replace the processor.
Control Status Test	Replace the processor.
Dcache Test	Replace the processor. Failure of this test may not prevent the system from running, but degradation of service is probable.
Icache test	Replace the processor. Failure of this test may not prevent the system from running, but degradation of service is probable.
Write Buffer Test	Replace the processor. Replace the memory 1.
Bus Test	Replace processor. Replace memory 1. Reseat all circuit packs in the processor carrier except SYSAM. The carrier may be defective. Follow normal escalation procedures.
Parity Test	Replace the processor. Replace the SYSAM.
Timer Test	Replace the processor.
Bus Config Test	Replace processor.
Mem Config Test	Check memory boards for correct TN number and positioning on the carrier. Reseat memory boards.
Memory Functional Test	Replace memory boards one at a time until test passes.
Memory Board Stuck Bit Test	Replace memory board.
Memory Board EDC Test	Replace memory board.

Continued on next page

Table 4-1. Initialization Diagnostics for All Reset Levels — *Continued*

Error Code	Description/ Recommendation
Memory Board Burst Test	Replace memory board Replace processor board The carrier may be defective. Follow normal escalation procedures.
Sysam Test	Replace the SYSAM board.
Vm Test	Replace the processor.
Exception Test	Replace the processor.
MSS Test	Replace the MSSNET board. Replace the processor.
Sanity Timer Test	Replace the SYSAM board.
Dupint Test	Replace the DUPINT board.
Disk Test	Replace the disk drive.
Loading Disk	Reformat disk. Replace the MSSNET board.
Ram Data Checksum Test	Reboot from whichever device (tape or disk) was *not* used for the failed reboot. Replace memory.
Ram Text Checksum Test	Reboot from whichever device (tape or disk) was *not* used for the failed reboot. Replace memory.
Tape Test	Replace the tape cartridge. Replace the tape drive. Replace the MSSNET board.
Pktint Reset Test	Replace the packet interface board.
Mem Board Couple Test (Extended reboot only)	Replace the indicated memory board.

SPE-Down Command Interface

A limited command interface called the SPE-down interface can be used to communicate with low level firmware when system software is unavailable for executing the usual maintenance commands. This is useful in three situations.

- The SPE is down in a system without duplicated SPEs
- The standby SPE is down in a system with duplicated SPEs
- One SPE is locked standby in a system with duplicated SPEs

SPE-Down Mode

Severe problems with components of the SPE may render a non-duplicated system incapable of call processing and other normal operations. When this happens, the system enters SPE-down mode and software is no longer in control. If the SPE is duplicated, this situation only occurs when *both* SPEs have fatal faults. Otherwise, if one SPE goes down, an interchange will occur and the system will run on the newly active SPE.

When SPE-down mode is invoked, firmware on the SYSAM circuit pack performs the following actions:

- Invokes emergency transfer
- Activates the Customer Alarm
- Lights the red MAJOR LED on the SYSAM board
- Reports an alarm to INADS
- Lights the ACK LED if the INADS alarm report is acknowledged
- Stores information about the causative fault
- Presents the SPE-down command interface
- Attempts a reboot every twenty minutes
- Repeats the INADS alarm notification every three hours

SPE Locked Standby or Standby SPE-Down

The SPE-down interface can be useful when repairing a standby SPE on a duplicated system. For example, if handshake communication is down, this is the only way to communicate with the standby SPE. Or, if a circuit pack on the standby has been replaced, this interface allows you to test both that circuit pack and the rest of the standby SPE before unlocking.

When the standby SPE on a duplicated system is down, or locked by means of the SPE-Select switches, it is no longer in communication with the active side, and the system is functionally unduplicated. In this state, the normal Maintenance User Interface is unavailable to the standby SPE. You can use the SPE-down interface to test the standby SPE and verify its health before rebooting or unlocking. A test of all SPE boards takes only a short time and ensures that all problems have been fixed and the SPE is ready to return to service.

Bringing Up the SPE-Down Interface

When SPE-down mode is in effect, the red LED will be lit on the Processor circuit pack and the system will present the following message:

```
*********** SPE DOWN MODE *************
```

An alarm-notification call already in progress will preempt input from the G3-MT. When the call is completed or dropped, the system will display the results of the call and display a welcome message with one of the following prompts, indicating which SPE is currently connected to the terminal.

`SPE_A_DOWN>`	If SPE-A was active when the system went down
`SPE_B_DOWN>`	If SPE-B was active when the system went down
`SPE_DOWN>`	If the SPE is unduplicated

You can now enter SPE-down interface commands as described in the following section, “Using the SPE-Down Interface.” If the prompt does not appear, check the connections between the terminal and the control carrier. Make sure the cable is connected to the connector labeled *ACTIVE*. If possible, try a different cable and/or terminal. If the prompt is still not present, replace the SYSAM circuit pack. If the SPE remains down with no prompt, follow normal escalation procedures.

To return the standby SPE to service, see the following section, “Bringing the SPE Back into Service.”

SPE Locked Standby or Standby SPE-Down

To bring up the SPE-down interface on a functioning duplicated system, connect the G3-MT terminal to the STANDBY terminal connector on the rear panel of either processor carrier. Assuming all cabling is intact, either connector will access the SPE which is standby. If the standby SPE is down, the message and prompt shown above will be displayed. To enter SPE-locked-standby mode, carefully, and *one at a time*, move the SPE-Select switches to the position indicating the carrier of the currently active SPE. For example, if the SPE in carrier A is active, move the switches to position A. When the SPE is locked, SPE interchanges are prevented, memory shadowing is turned off, handshake is down, and maintenance activities normally controlled by software on the active SPE cease. The following message is printed, (in this example, A is locked standby):

```
*********SPE A locked standby************
```

One of the following prompts will appear, indicating which SPE is locked *standby* and whether the SPE is down.

```
SPE_A_LOCKED>

SPE_B_LOCKED>

SPE_A_DOWN_LOCKED>

SPE_B_DOWN_LOCKED>
```

You can now enter the commands described in the following section, “Using the SPE-Down Interface.” If the prompt fails to appear, check your connections. Try connecting to the connector labeled *STANDBY* on the other PPN control carrier (A or B). If possible, try using a different cable and/or terminal. If the above actions do not produce a prompt, replace the SYSAM circuit pack on the standby SPE. If the prompt is still not present, follow normal escalation procedures.

If an SPE was down and the SPE-Select switches are set to lock, the down-and-locked-standby mode *replaces* the SPE-down mode. Normally, when the standby SPE is up and cycling, the yellow LED on the Processor circuit pack flashes on and off. If the SPE is locked standby *and* a terminal is connected to the STANDBY connector, the Processor LED remains unlit.

To return the standby SPE to service, see the later section, “Bringing the SPE Back into Service.”

NOTE:
The physical connection of the terminal to the *STANDBY* connector while the SPE is locked standby with the SPE-Select switches prevents the Standby Maintenance Monitor (SMM) from running. Any reboot command to the standby while it is in the locked state will abort.

Using the SPE-Down Interface

When one of the above prompts appear, you may enter Spe-down interface commands. These are executed by the Low-level Maintenance Monitor (LMM), which is firmware resident on the processor board for controlling initialization and recovery actions, and processor and memory diagnostics.

Communications with the G3-MT are handled by the SYSAM board. If a remote access port (SYSAM-RMT) call is received while in this mode, it will preempt access by the local G3-MT, and this message will be displayed:

```
Local Terminal session overridden by remote access
KEYBOARD LOCKED, WAIT FOR SYSAM OR LOGIN PROMPT
```

When the call is completed or dropped, the prompt will return. Note that the SPE-down interface to an SPE that is locked standby is never available to the remote access port, because the standby SPE is isolated from the active SYSAM circuit pack.

A limited set of commands is available to the SPE-down interface, as follows.

Table 4-2. SPE-Down Interface Commands

Keyboard Entry	Command
?	Help
r	Reboot
s	Secondary reboot
d	display alarms
t al or **t**	Test all standby SPE circuit packs
t sy	Test SYSAM circuit pack
t pr	Test Processor circuit pack
t m1	Test Memory circuit pack 1
t m2	Test Memory circuit pack 2
t m3	Test Memory circuit pack 3
t m4	Test Memory circuit pack 4
t ma	Test all Memory circuit packs
t du	Test DUPINT circuit pack
t ms	Test MSSNET circuit pack
t p1	Test PKTINT circuit pack 1
t p2	Test PKTINT circuit pack 2
t p3	Test PKTINT circuit pack 3
t pa	Test all PKTINT circuit packs

The following qualifier can be used with the test commands:

1 to **99**	Number of repetitions (default is 1)

Enter *only* the characters which appear in bold type. For instance, to test all memory boards ten times, enter **t ma 10** Entering **t** results in testing all boards once. You can abort the execution of a command by pressing ESC three times.

Test Commands

After a command is entered, various test result messages are printed on the G3-MT, indicating whether each test passes, fails or aborts. If any components fail, refer to the Maintenance Object documentation that applies. Additional information for interpreting these results can be found in the section on Testing the Standby SPE under Troubleshooting a Duplicated SPE in Chapter 5, "Responding to Alarms and Errors". Note that the test memory command performs exhaustive tests and can be very time-consuming.

When testing is complete, the system readies itself for another command and the prompt appears. If testing does not complete within 20 minutes, the following message is displayed:

```
LMM did not finish test in time.
```

This is a serious error indicating that the processor, bus and/or LMM are not working properly. Normally you will see initial test result output within a few seconds. If not, you can abort the test request by pressing the ESC key three times, and the command prompt will be returned.

If the SPE-down mode is entered or re-entered as a result of the test request, the screen displays:

```
Can't continue - test aborted.
```

Again, this is a serious error, but at least the processor is able to handle SPE-down reporting. Likely fault locations are memory board number 1, processor board, or processor/memory bus.

Display Alarms Command

The display alarms command asks for the alarms that caused the SPE to go down. It is valid only in the SPE-down or down-and-locked-standby mode. If **d** is entered while the SPE is in one of the down modes, the following header is displayed:

```
DISPLAY ALARMS:
Physical    Logical     On        Alternate   Alarm    Date       Date
Name        Name        Board?    Name        Type     Alarmed    Resolved
```

The header is followed by one and only one of the following lines (except that more than one Memory circuit pack failure may be displayed):

---	PROCR	y	-----	MAJOR	-----	-----
-----	MEM_BD_0	y	-----	MAJOR	-----	-----
-----	MEM_BD_1	y	-----	MAJOR	-----	-----
-----	MEM_BD_2	y	-----	MAJOR	-----	-----
-----	MEM_BD_3	y	-----	MAJOR	-----	-----
-----	MSS_NET	y	-----	MAJOR	-----	-----
-----	TAPE	y	-----	MAJOR	-----	-----
-----	DISK	y	-----	MAJOR	-----	-----
-----	NO_TAPE	y	-----	MAJOR	-----	-----
-----	BOOT_ ERROR_		-----	MAJOR	-----	-----
-----	SPE_SAN		-----	MAJOR	-----	-----

Note that the display is designed to approximate an alarm display from software maintenance, but is not populated with certain information, represented by dashed out fields. Only the first failed component detected is displayed.

In the absence of any other information about the cause of the failure, replace the indicated component using the procedures described in *Replacing SPE Circuit Packs*. After all tests pass, return the standby SPE to service, with procedures described in the later section, “Bringing the SPE Back into Service.”

BOOT_ERROR indicates that the LMM was not able to either load, start, or keep the SPE running following a reboot request. SPE_SAN indicates that SYSAM detected enough sanity timeouts to exceed the threshold.

Reboot Commands

After all SPE-down interface tests have passed, an SPE can be brought back up by using the reboot commands. The reboot command, **r** initiates a reboot using the boot image loaded on the disk device. The secondary reboot command, **s**, initiates a reboot using the boot image loaded on the tape device. The latter is useful if the boot image on the disk is corrupted, the disk device is faulty, or a different software load is desired. A reboot can be interrupted by pressing the ESC key three times.

As noted earlier, if an SPE is locked in the standby mode, the reboot commands cannot be entered and will abort.

Bringing the SPE Back into Service

WARNING:
In a system with duplicated SPEs, a spontaneous SPE interchange may occur if the active SPE is not in good health and either

— an unlocked SPE completes its reboot and handshake is reestablished

— a locked SPE in which the Standby Maintenance Monitor (SMM) is running is unlocked

WARNING:
Use the status specommand to determine the health of the active SPE and whether an interchange will occur.

Once all tests pass using the SPE-down interface, the SPE should be competent to return to service. There are however certain problems which will not show up in testing that may prevent this. Follow the appropriate procedure below to bring the SPE back up.

Simplex SPE

After the reboot command is entered, a series of diagnostics is run on the SPE. Results are displayed as they occur, as described in preceding sections. If all tests pass, the boot image is loaded and control is given to the operating system.

If you cannot get the SPE to reboot after replacing the components that failed SPE-down interface tests, follow normal escalation procedures.

Duplicated SPE

The physical connection of the G3-MT to the *STANDBY* connector, while the SPE is locked standby with the SPE-Select switches, prevents the Standby Maintenance Monitor (SMM) from running. Thus, any reboot command to the standby while in this state will abort. To reboot an SPE that is locked standby and has a G3-MT connected to it, simply move the SPE-SELECT switches to the *AUTO* position *one at a time*. This will automatically cause the standby SPE to reboot and its progress will be displayed on the G3-MT. Moving the switches back to the locked position will cause the reboot to abort.

To reboot the standby SPE and have it remain locked standby following the reboot, use the following procedure:

1. Start the reboot by moving the SPE-Select switches one at a time to the AUTO position.

2. *As soon as initialization diagnostics begin to appear on the screen*, disconnect the G3-MT cable from the *STANDBY* connector on the control carrier.
3. Return the SPE-SELECT switches to their previous locked position.

When the standby is back up and cycling, the yellow LED on the Processor circuit pack will begin flashing. It is then safe to unlock the SPE-Select switches if they were relocked. At this point, the system should re-establish handshake communication, turn on memory shadowing (assuming the standby is not busied out), and perform a refresh of the standby SPE's memory. These steps can be monitored by using the **status spe** command at a terminal connected to the *ACTIVE* terminal connector. When these steps have been completed, the standby SPE should have a "functional" state of health and be fully in service.

If all tests pass, but the SPE does not return to service, there may still be problems on the standby which escaped detection by SPE-down testing. In this case, use the following steps, which describe a means of sequentially replacing circuit packs that are the most likely source of the problem.

1. First determine if memory shadowing is disabling handshake. With the standby locked, busyout the standby SPE; this prevents shadowing from turning on.
2. Bring up the standby as described above (unlock, unplug the STANDBY terminal and relock). If the yellow LED on the Processor fails to flash, follow normal escalation procedures. After the yellow LED begins flashing, unlock and monitor the recovery progress by repeatedly entering **status spe** on a terminal connected to the *active* SPE. If handshake is not established after 2 minutes, memory shadowing is not the problem. Proceed to step 4.
3. Release the standby and follow the progress of the refresh with **status spe**. If the refresh succeeds, the system should be fully functional. If the onset of shadowing or refresh coincides with handshake failure, replace the following circuit pack one at a time in the order shown and repeat this procedure from step 1 each time. (Use lock-and-power-down and DUP-CHL instructions).
   a. Standby DUPINT
   b. Standby PKT-INT
   c. Standby MSSNET
   d. Active DUPINT

   If the problem persists, follow normal escalation procedures.
4. If handshake has not come up after 2 minutes, replace each of the following circuit packs one at a time, in the order shown, and repeat this procedure from step 1 each time:
   a. Standby PKT-INT
   b. Standby DUPINT

c. Standby SYSAM

d. Standby PROCESSOR

e. Standby MSSNET

f. Standby MEMORY number 1

g. Standby MEMORY number 2

If the problem persists, follow normal escalation procedures.

Responding to Alarms and Errors

5

Safety Precautions

By observing the prescribed safety precautions when working on the switch, you can avoid unnecessary disruption of service and damage to the equipment. The items on this list should be a regular part of your routine.

WARNING:
Failure to comply with these practices can have catastrophic effects on system service and hardware. Read the explanations following the list to ensure a complete understanding of these necessary procedures.

- Whenever touching any component inside the switch cabinet, ground yourself by means of the wrist strap attached to the switch cabinet, and avoid sources of static electricity.
- When you log on with the terminal, be aware that INADS alarm notification is normally disabled. Do not leave your terminal logged on when you leave the system.
- Think carefully before moving SPE-SELECT switches. Always set them one at a time to the letter of the PPN control carrier that is *currently active* (unless a procedure specifically tells you to do otherwise).
- Never "hot plug" an SPE circuit pack, except for the tape and disk drives on a simplex SPE. Lock and power down the PPN control carrier first.
- Do *not* power down switch node or port carriers to replace a board.
- Handle fiber-optic cables with care. Bending, piercing or cutting the cable can sever communications between major subsystems.
- When disconnecting fiber-optic cables, take hold of both the lightwave transceiver and the cable connector.

- Before powering down a cabinet or carrier that contains DEFINITY AUDIX circuit packs (TN566 and TN2169), you must first power down the AUDIX unit to avoid damaging the AUDIX software. Instructions for powering down this unit appear on the circuit pack and in DEFINITY AUDIX documentation.
- When you are finished working on a cabinet, replace and secure all panels and covers to avoid disseminating electromagnetic interference.

Electrostatic Discharge

Whenever a circuit pack is inserted or removed, the grounding wrist strap attached to the cabinet must be used to avoid damage or disruption from ESD. Use of the wrist strap is also required whenever touching any components inside the switch cabinet, including the SPE-SELECT and EMERGENCY TRANSFER switches. While such actions may not cause a problem in a highly controlled environment, disruption to the system could result when conditions are not ideal, (for example, when the air is very dry).

If you *must* proceed when a wrist strap is not available, grab the outside panel of the cabinet with one hand *before* touching any components, and keep your extra hand grounded throughout the procedure.

Handle a circuit pack only by the faceplate, latch, or top and bottom edges. Do not touch board components, leads or connector pins. Keep circuit packs away from plastic and other synthetic materials such as polyester clothing. Do not set a circuit pack on a non-conductive surface such as paper. Use the anti-static bag, if available.

Never hand a circuit pack to another person unless that person is also grounded.

The body collects potentially damaging amounts of static electricity from many ordinary activities. The smallest amount of ESD that can be felt is far above that which can damage a sensitive component or disrupt service!

Figure 5-1 and Figure 5-2 on the following pages show the location of the grounding jacks.

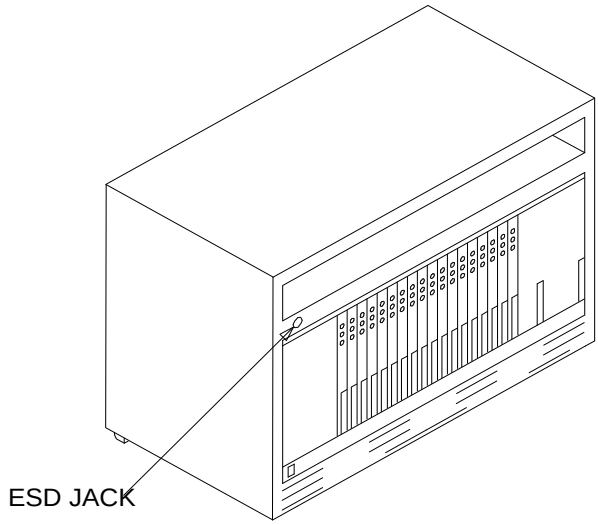

Figure 5-1. Single Carrier Cabinet ESD Grounding Wrist Strap Jack

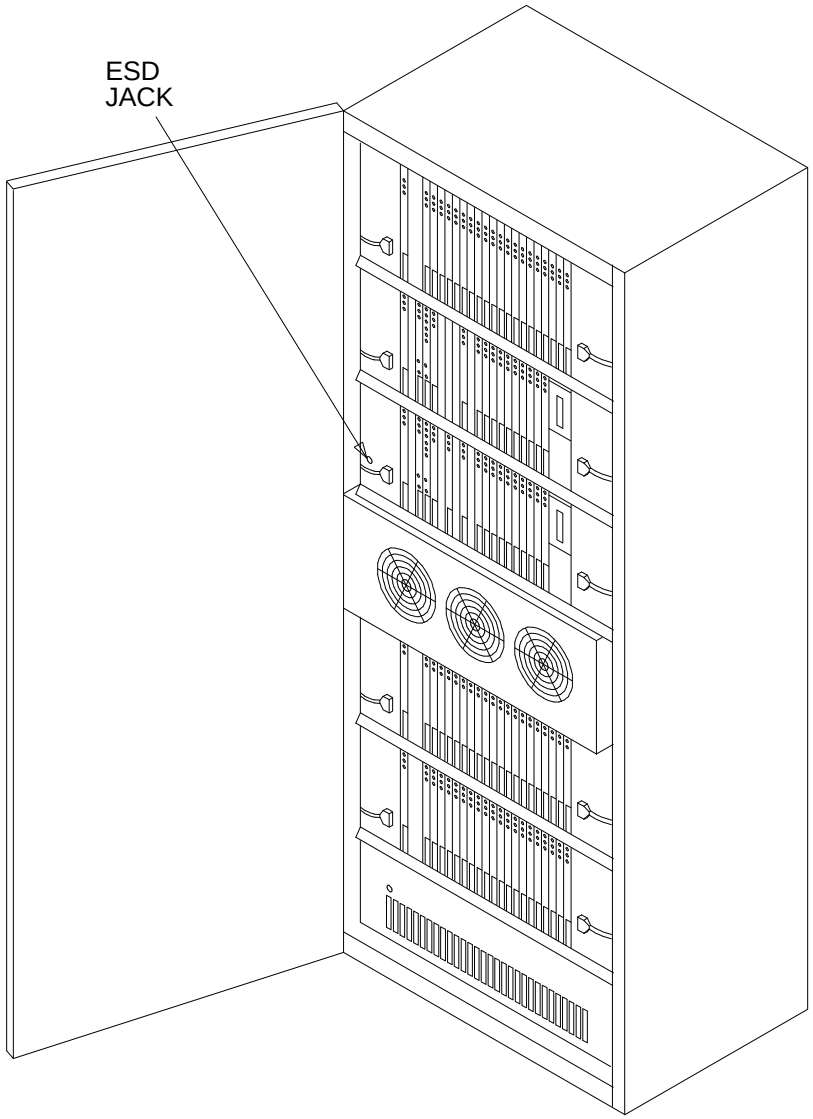

Figure 5-2. Multicarrier Cabinet ESD Grounding Wrist Strap Jack

Suppressing INADS Alarm Reporting

Normally, all major and minor alarms are automatically reported to INADS by phone via the SYSAM-RMT port. This feature can be activated, deactivated or modified by use of the **change system-parameters maintenance** command or by default when you log on if the system is so administered. This allows you to work on the switch without sending alarms generated by maintenance activity.

If you suppress alarm origination at login, the system still originates a cleared alarm message if the repair activity resolves all previously reported major and minor alarms. Unresolved alarms will be sent when the login is terminated, Alarms generated and resolved during the session are not sent.

If 30 minutes pass without any entries from a terminal logged in as craft, the terminal is logged off and alarm reporting is reactivated. If a logged-on terminal is left unattended during this period, the system could develop a problem without INADS receiving notification. Furthermore, when alarm reporting is reactivated, a burst of all unresolved alarms will be sent at once.

Be sure to reactivate alarm origination when you are finished or when the system will be unattended.

Reseating and Replacing Circuit Packs

Most repair procedures involve replacing faulted circuit packs. In some cases a problem may be resolved by reseating the existing circuit pack (pulling the board part of the way out and then reinserting it). Reseat a circuit pack *only* when explicitly instructed to do so by the documented procedures. Reseating is discouraged since it can put a faulty component back into service without addressing the cause, resulting in additional and unnecessary dispatches. After reseating a circuit pack, make sure the problem is really fixed by thorough testing and observing the component in operation.

When a port board is removed from the backplane, no alarm is logged for about 11 minutes to allow for maintenance activity to proceed. After that, a minor on-board alarm is logged. If the port board is not administered, no alarm is logged.

WARNING:
This procedure can be destructive, resulting in a total or partial service outage.

WARNING:
Proceed only after consulting and understanding the applicable service documentation for the component.

WARNING:
Observe all Safety Precautions described above.

WARNING:
If the yellow LED on the circuit pack to be removed is lit, the circuit pack is active and services utilizing it will be interrupted.

WARNING:
Follow special procedures for the circuit packs listed below.

Special Procedures

The following circuit packs require special procedures.

To replace any of the boards listed below, follow the steps listed in the appropriate documentation in Chapter 9, "Maintenance Object Repair Procedures". For components of the SPE, see the following section, "Replacing SPE Circuit Packs" on page 5-8.

- UN331B Processor (SPE)
- TN1650B Memory (SPE)
- TN1655 Packet Interface (SPE)
- TN1648 SYSAM (SPE)
- UN332 MSSNET (SPE)
- TN1657 Disk (SPE)
- TN1656 Tape (SPE)
- TN768/780 Tone/Clock
- UN330B Duplication Interface
- TN750 Expansion Interface
- TN573 Switch Node Interface
- TN572 Switch Node Clock
- DS1C

To Replace a Circuit Pack:

1. Attach the grounding strap to the cabinet and your bare wrist.
2. Unlock the latch pin (see Figure 5-3 below).
3. Pull down on the locking lever until the circuit pack is disconnected from its socket.
4. Pull the circuit pack out just enough to break contact with the backplane connector. Use steady, even force to avoid disturbing the backplane. If the procedure you are following instructs you to simply reseat the circuit pack, then proceed to step 8.
5. Slide the circuit pack out of the slot, taking care not to disturb surrounding components.
6. When handling the circuit pack, touch only the edges. Touching components on the board can cause electrostatic or physical damage.

7. Insert the back edge of the circuit pack into the slot, making sure it is vertically aligned.
8. Slide the board into the slot until it engages the backplane connector. *Use extreme care in seating the backplane connectors. A bent pin can cause catastrophic problems*.
9. Lift the locking lever until the latch pin engages.
10. Verify that the board has made contact by observing the LEDs and continue the repair procedure.

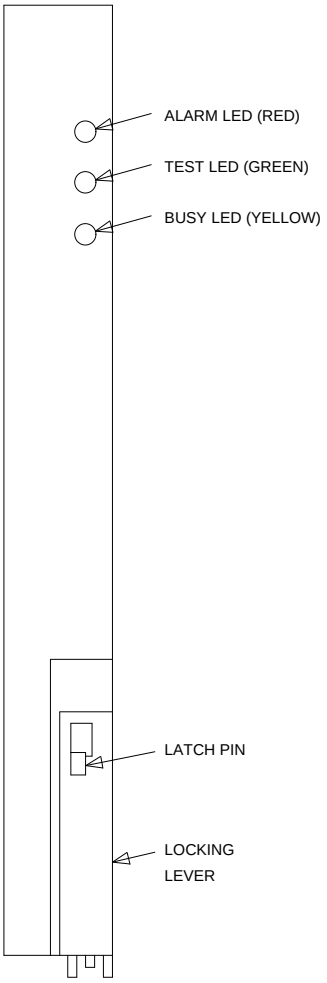

Figure 5-3. Typical Circuit Pack

Replacing SPE Circuit Packs

All circuit packs on the processor carrier of the Processor Port Network except for the Tone/Clock board are components of the SPE. In addition to the customary MO documentation, there are additional diagnostic techniques for these boards described in the following section, "Troubleshooting a Duplicated SPE" on page 5-11, and in the section *SPE-down Interface*. Instructions for replacing the Tone/Clock circuit pack can be found in the TDM-CLK MO documentation.

WARNING:
DO NOT "HOT PLUG" AN SPE BOARD*. Before removing any SPE circuit pack you must power down the carrier in which it resides, (except in the case of a tape or disk drive in a simplex SPE). Powering down the processor carrier is destructive on a simplex system, causing a total service outage. Be sure you have consulted the appropriate documentation for the component you are replacing. Be sure you are familiar with the precautions at the beginning of this chapter.*

Simplex SPE

This procedure is destructive, resulting in a total service outage except for lines administered with Emergency Transfer. The processor *must* be powered down to avoid hardware damage. Arrange to perform this procedure when a service outage will have the least impact on the customer.

1. Attach the grounding strap to your wrist.
2. Remove power to the processor carrier, (carrier A), by unplugging the power cords located on the front of the power units located at *both* ends of the carrier.
3. Remove or reseat the circuit pack using the procedure described previously in *Reseating and Replacing Circuit Packs*.
4. Restore power to the carrier by plugging both power cords back in.
5. Monitor the system reboot by observing the LEDs and G3-MT output.

   These indicators are described in *Initialization and Recovery*.
6. Test the replaced component(s) using the appropriate MO documentation.
7. If the same problem persists, reinstall the original circuit pack to avoid confusing further troubleshooting.

Replacing Circuit Packs on a Duplicated SPE: Lock-and-Power-Down

By following the lock-and-power-down procedure, components of a duplicated SPE can usually be replaced with no disruption of service. Proceed through the following steps in order.

WARNING:
In a system with duplicated SPEs, a spontaneous SPE interchange may occur if the active SPE is not in good health and either

— An unlocked SPE completes its reboot and handshake is reestablished

— A locked SPE in which the Standby Maintenance Monitor (SMM) is running is unlocked

WARNING:
Use the status spe command to determine the health of the active SPE and whether an interchange will occur.

1. Enter **status spe** *to verify that the component to be replaced is on the standby SPE. If it is, go to step 2.*

   If the component is on the active SPE, initiate a planned SPE interchange by entering **reset system interchange**. If the interchange fails, there may be faults on the standby SPE preventing the interchange. You must either repair the fault on the standby SPE first, or force an interchange by using **reset system interchange health-override**.

   WARNING:
   Forcing an interchange may disrupt service. Arrange to do so at a time suitable for the customer.

2. Enter **status port-network 1** to check the health of the Tone/Clocks in the PPN.

   The Tone/Clock in the same carrier as the active SPE should have a service state of "in". If not, repair it using the TDM-CLK documentation before proceeding.

3. Lock the active SPE.

   After grounding yourself, move the SPE-SELECT switches on both DUPINT boards, one at a time, to the carrier designation of the active SPE. For example, if the A carrier SPE is currently active, move the switches to position "A".

4. Enter **status port-network 1** to verify that the active Tone/Clock is in the same carrier as the active SPE.

If not, repeat the command until this condition is met. If the active Tone/Clock has not migrated to the active carrier after one minute, there is a Tone/Clock problem. *The Tone/Clock problem must be fixed first to avoid service disruption.* Consult MO documentation for TDM-CLK.

5. Power down the standby processor carrier by removing the power cords from the power supplies located at *both* ends of the carrier.
6. Remove the failed circuit pack and replace it with a new one of the same type.
7. Power up the carrier by replacing the power cords.

   Lit red and green LEDs indicate restoration of power and testing of the boards. These will go out as tests pass.
8. This step is optional. Use a G3-MT and the SPE-down interface to test the standby SPE as follows.

   If a G3-MT is connected to the *STANDBY* connector on the back of either PNN control carrier, the power-up reboot of the standby will abort and the SPE-Down interface can then be used to enter commands to the LMM firmware. Use **t al**, or the SPE-Down interface test command for the replaced component, to confirm that the problem has been fixed. Repair any failures reported. A complete description of the SPE-Down interface appears in Chapter 4, "Initialization and Recovery".

   When you have finished testing, move the SPE-Select switches to the AUTO position *one at a time*. This will unlock the standby and begin a reboot which can be monitored from the G3-MT.
9. Verify that the standby is up.

   Regular flashing of the yellow LED on the Processor board indicates that the standby SPE is up and cycling. If the yellow LED is not flashing after five minutes, you must test the standby SPE as described in the above step before proceeding. Relock the SPE standby, attach a G3-MT to the STANDBY connector on the back of either PPN control carrier and execute the SPE-down interface tests. All tests must pass before unlocking.
10. If the standby SPE is still locked, unlock it by returning both SPE-Select switches to the AUTO position *one at a time*.
11. Enter **status spe** to confirm that handshake is up. This should occur within 2 minutes. When it is, enter the **test long clear** command for the replaced component. If an alarm does not clear, consult the appropriate MO documentation.
12. Verify that the standby SPE is brought into service.

    Enter **status spe**. The standby SPE is fully operational when handshake is up, shadowing is on, and memory is refreshed. It can take up to ten minutes after unlocking for the standby to be brought fully into service.
13. If the standby SPE does not fully return to service, consult SPE-STBY in Chapter 5, "Responding to Alarms and Errors".

Troubleshooting a Duplicated SPE

The section on maintenance object STBY-SPE in Chapter 9, "Maintenance Object Repair Procedures" contains procedures for troubleshooting specific problems such as handshake failure, memory shadowing failure, and poor state of health. The following procedures describe a method for determining the cause of a spontaneous SPE interchange and resolving any related problems.

If a spontaneous SPE interchange has occurred, you can generally assume that a serious fault has occurred on the SPE that is currently the standby. The following symptoms indicate that a spontaneous SPE interchange has taken place:

- A MINOR alarm with error type 103 is logged against STBY-SPE.
- An interchange entry is recorded in the initcauses log.
- The system is put into *recent interchange mode*, which prevents further SPE interchanges from taking place.

The presence of recent interchange mode is displayed on the **status spe** screen. The system is released from this mode, and the minor alarm is cleared, after 1 hour, or upon the execution of **test spe-standby long**, regardless of whether all tests pass.

There are three possible causes of a spontaneous interchange:

- Major hardware failure
- Failed recovery that has been software escalated
- Switching both SPE-SELECT switches to the standby carrier (not a recommended procedure)

In the last case, the interchange is not fault-driven, and no specific repair action is required. To determine whether this is the case, enter **display initcauses**. If the interchange was initiated by the SPE-SELECT switches, the ‘‘Cause’’ field will appear as in the following example.

Cause	Action	Escalated	Carrier	Time
SPE-SELECT switch	1	no	1B	11/27 14:53

If the interchange was fault-driven, there are two ways of finding the cause.

1. Using alarm and error logs in conjunction with the timestamp described above. After a spontaneous SPE interchange has occurred, the Alarm Log retains a record of any MAJOR ON-BOARD alarm against an SPE component that took place before the interchange. This record is retained for three hours and may indicate the cause of the interchange when testing is not possible or conclusive. Other information in the Error Log may also be helpful.

2. Testing the standby SPE when the logs do not identify the problem.

Start by determining the time of the interchange. Then, examine the alarm and error logs as described in the following section. If that does not identify the problem, proceed to the next section, which describes a sequence of tests of the standby SPE.

Determining the Time of a Spontaneous Interchange

There are two ways to tell at what time a spontaneous interchange has taken place:

- STBY-SPE Error 103

  This error is logged with a minor alarm whenever a spontaneous interchange takes place. The time recorded for the *first occurrence* of the error is the approximate time of interchange. The error is logged against the carrier of the SPE that was active before the interchange. This should now be the standby SPE, assuming no further interchanges have taken place.

- Display initcauses

  The **display initcauses** command displays a record of all system resets. A complete description of this command appears in Chapter 8, "Maintenance Commands". In the following example, a spontaneous interchange *into* the B carrier SPE took place at 2:53 P.M. The standby SPE (B) transitioned into active mode with a WARM restart, (reset level 1).

Cause	Action	Escalated	Carrier	Time
Interchange	1	no	1B	11/27 14:53

Examining the Alarm and Error Logs

The system may have had time to log alarms or errors against the fault the caused the interchange. Proceed through the steps summarized in the following flowchart. Examine only major alarms with a timestamp near the time of interchange, and whose carrier designation is the current standby SPE (the SPE interchanged out of). Include any resolved alarms meeting this description.

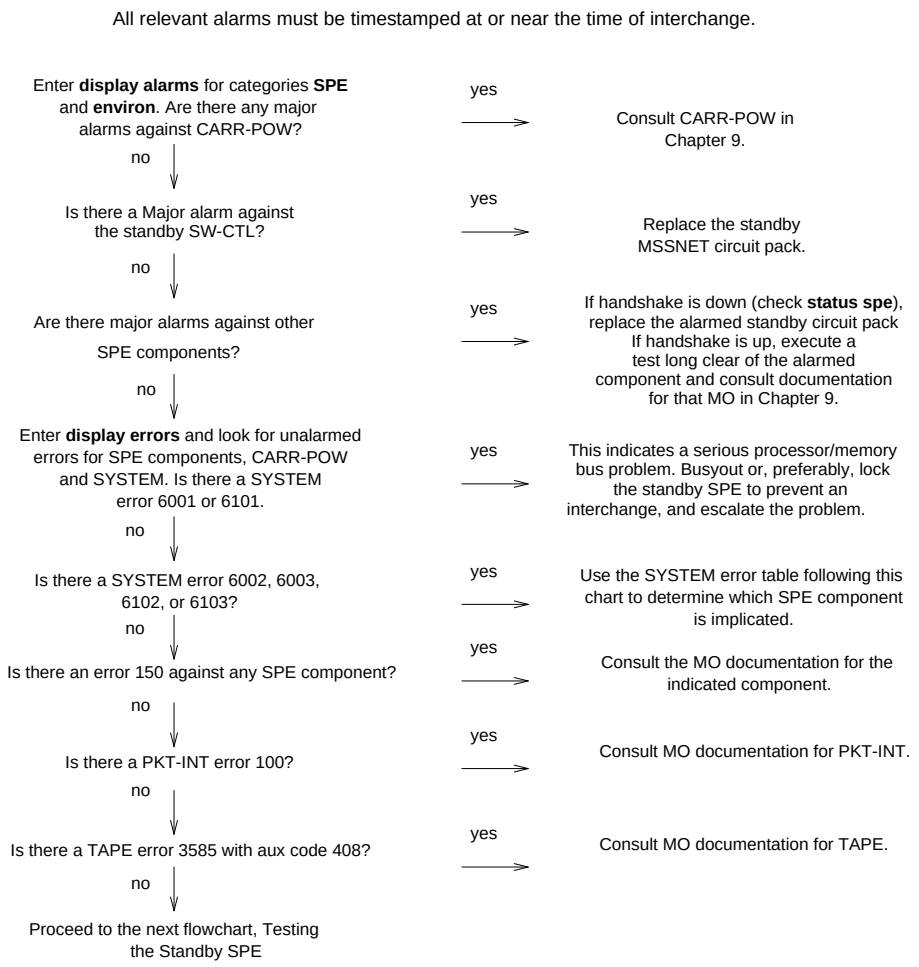

Figure 5-4. Determining the Cause of an SPE Interchange

Auxiliary Data for SYSTEM Errors 6002, 6003, 6102, and 6103

The following table shows which components are indicted by the auxiliary error codes found by using the preceding flowchart. Once you have identified the faulted component, consult the section for that MO in Chapter 9, "Maintenance Object Repair Procedures".

AUX Data	Implicated Maintenance Object
16384	PROCR
16385	MEM-BD
4137	PKT-INT
16391	SW-CTL
16386	SYSAM
16389	DUPINT
16392	HOST-ADAPTER
16397	TAPE
16398	DISK

Testing the Standby SPE

The system may not have had time to log errors against the failed component that caused the spontaneous interchange. If you've progressed through the preceding flowchart without determining the cause of interchange, test the standby for faults by proceeding through the following steps.

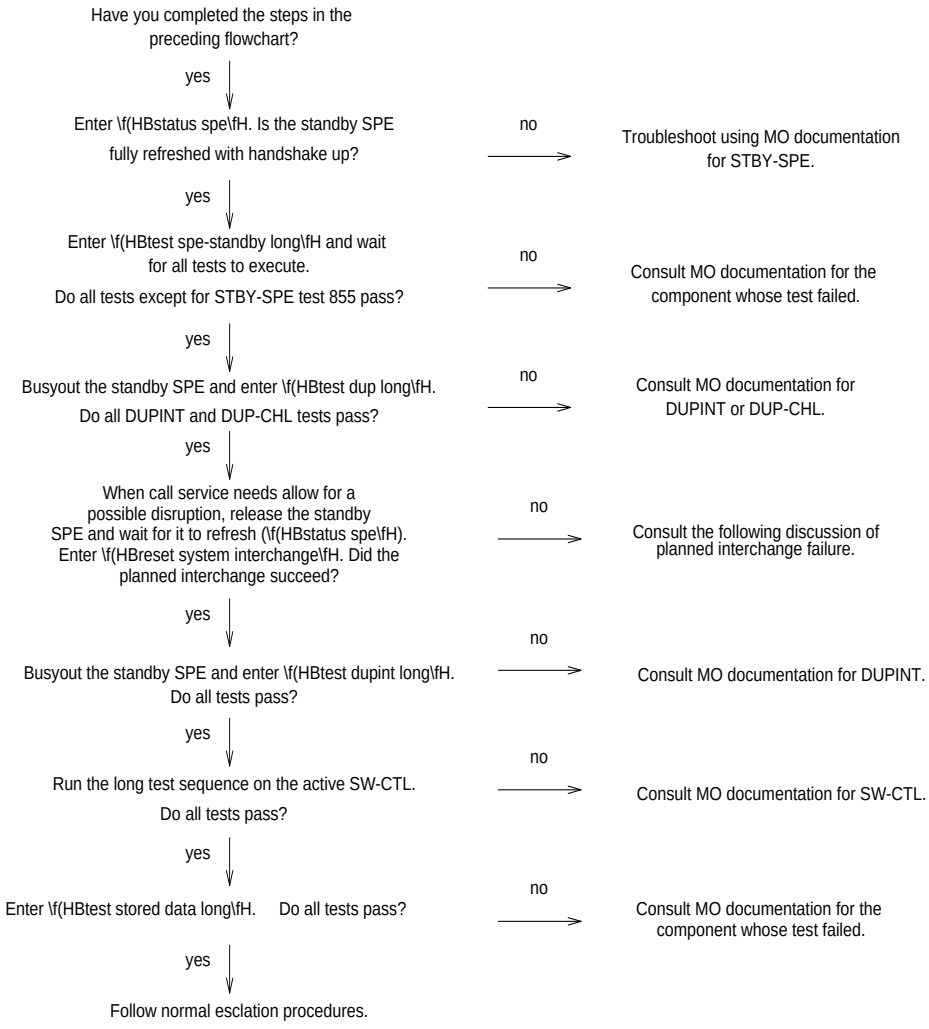

Figure 5-5. Testing the Standby SPE

Executing a Planned SPE Interchange

Planned SPE interchanges are initiated on demand by the **reset system interchange** command, or automatically by scheduled daily maintenance. The latter is administered with the system-parameters maintenance screen. A planned interchange normally has no perceivable effect on service. All active calls, transient calls, system links and stimuli, and data transmission are preserved. The SYSAM-RMT port (also called the Remote Access Port) is dropped, necessitating a re-login. The duration of the interchange is approximately one minute.

CAUTION:
Switching the SPE-select switches to the standby carrier causes a spontaneous interchange, not a planned one. This can disrupt service and is not a recommended procedure.

Prerequisites

Several conditions must be met to guarantee a non-disruptive interchange. If these are not met the system will not execute the interchange. All of these conditions, listed below, are expected to be met during normal operation.

- The SPE must not be locked by the SPE-SELECT switches.
- The standby SPE must be fully in service.

  That is, handshake is up, shadowing is on, memory is refreshed, and standby SPE state-of-health is "functional". STBY-SPE in Chapter 9, "Maintenance Object Repair Procedures" describes how to correct a failure of any of these.
- There can be no minor alarms against the standby's PKT-INT or SYSAM circuit packs.
- There can be no ongoing disk or tape operations on either active or standby MSS components.

  Wait until all such operations, such as translation saves or backup restores, are complete before requesting an interchange.

SPE Interchange Failures

If the above conditions are not met, or if any intermediate steps taken by the system in executing the interchange fail, the interchange is prevented. Usually, failure of a planned interchange has no effect on service.

If the interchange fails after the packet interface links have migrated, the system will require a reset level 1 (warm restart) to restore the links. In such a case, no calls are dropped, and new call service resumes within 5 seconds. However, it is probable that there is a severe system problem which predates the attempted interchange.

If the SPE is locked by means of the SPE-SELECT switches, error 607, auxiliary data 1153, is logged against SYSTEM. If the switches are not locked and the interchange fails, an unalarmed error 605 is logged against SYSTEM. The auxiliary code associated with this error indicates which aspect of the interchange failed. Table 5-1 explains the meaning of the auxiliary codes and what corrective action to take.

Table 5-1. SYSTEM Error 605 Aux Data, Planned Interchange Failure

Aux Data	See Note	Explanation
1352	1	Standby SOH "non-functional"
1353	1	Standby SOH not "functional"
1355	1	Handshake Communication with Standby SPE is down
1356	1	Memory Shadowing not enabled
1357	1	Standby memory not refreshed
1358	2	Mass Storage System was in use
1359	3	PKT-INT link migration failed
1360	1	Interchange failed *
1361	4	SW-CTL failure
1369	7	Could not suspend G3-MT connectivity *
1370	4	Could not freeze active SW-CTL *
1371	5	Internal Error associated with processor interrupts *
1372	6	Minor alarm on standby SYSAM or PKT-INT
1395		SPE Duplication not administered
1396	3	PKT-INT Link Migration failure in Begin Step *
1397	3	PKT-INT Link Migration denied, (peer test in progress)
1398	3	PKT-INT Link Migration failure in Completion Step *
1399	3	PKT-INT Link Migration failure in Finish Step *
1400	4	Could Not Idle SW-CTL dual port RAM *
1401	4	Could Not Refresh SW-CTL dual port RAM *
1402	5	Internal Error (could not get duplication status)
1403	5	Unable to inhibit Standby Maintenance Monitor

Continued on next page

Table 5-1. SYSTEM Error 605 Aux Data, Planned Interchange Failure — *Continued*

Aux Data	See Note	Explanation
1404	5	Failure to determine Standby SPE alarm status
1406	3	Active SPE's PKT-INT in held-reset state
1418	8	Active Duplication Interface circuit pack is in a bad state and needs to be reset.
2500	5	Internal Software failure (* sometimes)

* A WARM restart was required.

Notes for SYSTEM Error 605 AUX Data:

1. Follow repair instructions in STBY-SPE in Chapter 9, "Maintenance Object Repair Procedures" for the particular standby SPE problem. After fixing that problem, try the interchange again. If the problem persists, follow normal escalation procedures.
2. Mass Storage System is in use. Check Disk and Tape LEDs for activity. Wait until all MSS activity completes, then try the interchange again. If the problem persists, check for alarms and errors against MSS components and follow repair procedures in Chapter 9, "Maintenance Object Repair Procedures".
3. Test the PKT-INT on both carriers with the long test sequence. Follow procedures for PKT-INT in Chapter 9, "Maintenance Object Repair Procedures". Once *all* tests of both PKT-INTs pass, try the interchange again. If the problem persists, follow normal escalation procedures.
4. Consult SW-CTL service documentation. Test SW-CTL on both carriers with the long test sequence. Follow repair instructions for any failures. Once *all* tests of both SW-CTLs pass, try the interchange again. If the problem persists, follow normal escalation procedures.
5. Make sure the standby SPE is refreshed Then try the interchange again. If the problem persists, follow normal escalation procedures.
6. Examine alarm log to determine which of PKT-INT or SYSAM circuit packs has a minor alarm against it. Consult service documentation of whichever is alarm to clear

7. Check for errors/alarms against active SPE's SYSAM. If you find any, consult SYSAM service documentation. If you find none, and if all tests of the SYSAM long sequence pass, try the interchange again. If the problem persists, follow normal escalation procedures.
8. Run **test duplication-interface long** and follow instructions for any test that does not pass.

Fiber Fault Isolation Procedure

Use the following procedure to isolate faults on a fiber-link. When troubleshooting a system with duplicated Port Network Connectivity (PNC), you must first **busyout pnc-standby** before busying out a standby Fiber-Link (FIBER-LK), Expansion Interface (EXP-INTF), Switch Node Interface (SNI) or DS1 Converter (DS1C). At the end of this section is a description of the loopback tests run and a pinout of the cable used to connect the DS1C to DS1 facilities.

- A busyout of any of these components on a simplex PNC is destructive.
- Be sure to release all busied out components after completing the tests.

Steps:

1. Enter **display alarms** with category **pnc**.

   Are there any on-board alarms? If so, replace the circuit pack(s).
2. Enter **display errors** for category **pnc**.

   Check for any of the following errors:

Maintenance Object	Error Type
FIBER-LK	Any
SNI-BD	513
EXP-INTF	257 769 770 1281 1537 3073 3074 3075 3076 3585 3841 3842

If *one or more* of the above errors are present go to step 3.

If *none* of the above errors are present, look for SNI-PEER errors.

- If there is one SNI circuit pack with many different SNI-PEER error types, replace the SNI circuit pack with all of the SNI-PEER errors logged against it.
- If there are many SNI-PEER errors of the same error type, replace the indicted SNI circuit pack using the following table.

Error Type	SNI slot
1	2
257	3
513	4
769	5
1025	6
1281	7
1537	8
1793	9
2049	13
2305	14
2561	15
2817	16
3073	17
3329	18
3585	19
3841	20

- After replacing an SNI circuit pack, clear alarms by executing **test board** UUCSS**long clear** for all alarmed EXP-INTF circuit packs. Wait 5 minutes for any SNI-BD or SNI-PEER alarms to clear. (You can speed this process with **clear firmware counters [a-pnc | b-pnc]** for the PNC that was repaired).
- Exit this procedure.

3. Enter **list fiber-link** to get the physical location of the fiber-link endpoints. If a DS1C is administered to the fiber-link (DS1 CONV is "y"), use the **display fiber-link** command to get the physical location of the DS1C circuit packs on the fiber-link.
4. Execute **busyout fiber-link** FP followed by **test fiber-link** FP **long**.

If any tests in the sequence fail, proceed with step 5.

If all of the tests pass, clear alarms by executing **test board** UUCSS **long clear** for all alarmed EXP-INTF circuit packs. Wait 5 minutes for any SNI-BD, SNI-PEER, FIBER-LK, or DS1C-BD alarms to clear. You can speed this process with **clear firmware counters [a-pnc | b-pnc]** for the PNC that was repaired. You are finished with this procedure.

5. For each endpoint of the fiber-link, follow this flowchart:

   Busyout and **test board UUCSS long** and record all test failures. When looking at test results, consult the explanations and illustrations of the tests, which appear at the end of this procedure.

   `Board Not Assigned` displayed for an EXP-INTF in an EPN? If yes, **test maintenance long** to release an EXP-INTF that may be held reset by an EPN Maintenance circuit pack.

SNI/EI Manual Loop Back Procedure

Use this procedure to isolate a fault in the cables or lightwave transceivers of SNI/EI links. (Do not use this procedure on a connection with a DS1C as an endpoint.) By performing the loopback at both endpoints and, if applicable, at the cross-connect field, the failure point can be identified. If both endpoints pass, but the link remains inactive (with the boards not busied out), the fault should lie in the cabling in between. If the test passes at a transceiver, but fails at the cross-connect field, the cable or connectors in between are at fault.

A short optical fiber jumper with connectors is required for this procedure. If the link uses metallic cable, the metallic connector must be removed from the back of the carrier, and a lightwave transceiver connected in its place.

1. Note the condition of the yellow LED on the circuit pack.
2. Busyout the circuit pack.
3. Disconnect the transmit and receive fiber pair from the lightwave transceiver on the back of the circuit pack. Note which is the transmit fiber and which is the receive fiber for proper re-connection at the end of this procedure.
4. Connect the transmit and receive jacks of the lightwave transceiver with the jumper cable.

   NOTE:
   Make sure that the total length of the fiber jumper cable does not exceed the maximum length recommended for the fiber link connections between cabinets. Otherwise, test results may be influenced by violation of connectivity guidelines.

5. At the front of the cabinet, observe the yellow LED on the looped back circuit pack.

- If the yellow LED flashes on at a rate of once per second, the circuit pack or transceiver should be replaced.
- If the yellow LED flashes on at a rate of five times per second, the circuit pack or its lightwave transceiver may need replacement. This condition may also be due to a faulty system clock on the port network (for an EI) or the switch node carrier (for an SNI).
- If the yellow LED was flashing before starting this procedure, and it is now either solid on or solid off, this circuit pack and its lightwave transceiver are functioning properly.

6. Replace the faulty component(s) and reconnect the original cables in their correct positions. Be sure to use a lightwave transceiver that matches the one at the opposite end.
7. Release the circuit pack.

Loopback Tests Run for Fiber Fault Isolation Procedure

Figure 5-6 below illustrates the loopbacks performed on the SNI circuit pack for test 756 and test 757. Test 756 reports the result of the off-board loopback; test 757 reports the result of the on-board loopback. Test 756 and test 757 can be run individually or as part of the **test board**UUCSS**long** command for an SNI circuit pack.

Test 242 can be run as part of the **test board UUCSS long** command for an Expansion Interface circuit pack. Besides testing on-board components, this test is helpful for isolating problems between a circuit pack and the lightwave transceiver. The loopback shown in this diagram shows only part what test 242 does. If no lightwave transceiver is connected to the Expansion Interface circuit pack, an on-board loopback is performed on the Expansion Interface circuit pack. For more information about test 242, see the EXP-INTF section in Chapter 9, "Maintenance Object Repair Procedures".

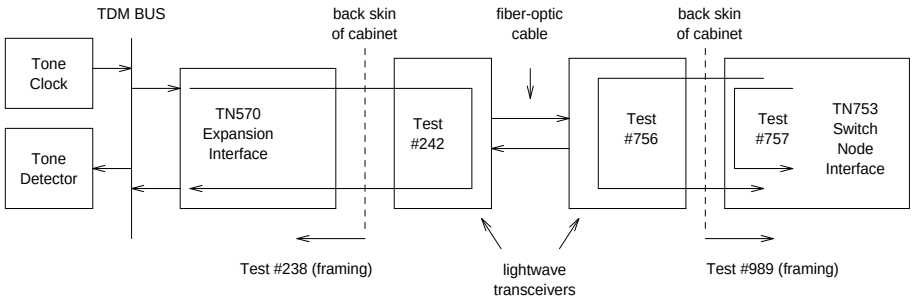

Figure 5-6. Fiber Fault Isolation Tests

If DS1Cs exist on the fiber link (check with **list fiber-link**), then additional DS1C loopback tests can be run to further isolate the problem. The DS1C loopback tests are shown in Figure 5-7 below, *DS1C Loopbacks*. For more information about DS1C loopback tests 788 and 789, see the DS1C-BD section in Chapter 9, "Maintenance Object Repair Procedures". For more information about DS1 facility loopback tests 797 and 799, see the DS1-FAC section in Chapter 9, "Maintenance Object Repair Procedures".

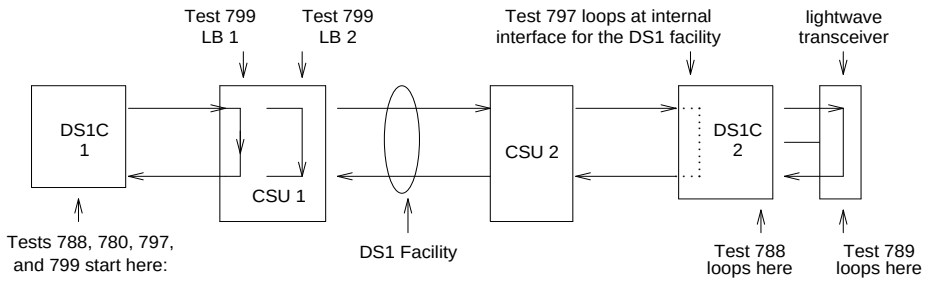

Figure 5-7. DS1C Loopbacks

Table 5-2 shows the pin assignments for the cable used to connect the TN574 DS1C circuit pack to DS1 facilities.

Table 5-2. DS1 Interface Cable Connectors

Lead	Desig.	50-Pin Connector Pin	15-Pin Connector Color	Pin	Color
Plug 04					
Facility D Line In	LID	38	W-BL	11	W-BL
Facility D Line In	LID*	13	BL-W	03	BL-W
Facility D Line Out	LOD	39	W-O	09	W-O
Facility D Line Out	LOD*	14	O-W	01	O-W
Plug 03					
Facility C Line In	LIC	41	W-G	11	W-G
Facility C Line In	LIC*	16	G-W	03	G-W
Facility C Line Out	LOC	42	W-BR	09	W-BR
Facility C Line Out	LOC*	17	BR-W	01	BR-W
Plug 02					
Facility B Line In	LIB	44	W-S	11	W-S
Facility B Line In	LIB*	19	S-W	03	S-W
Facility B Line Out	LOB	45	R-BL	09	R-BL
Facility B Line Out	LOB*	20	BL-R	01	BL-R
Plug 01					
Facility A Line In	LIA	47	R-O	11	R-O
Facility A Line In	LIA*	22	O-R	03	O-R
Facility A Line Out	LOA	48	R-G	09	R-G
Facility A Line Out	LOA*	23	G-R	01	G-R

Troubleshooting ISDN-PRI Problems

The following flow chart defines a layered approach when troubleshooting ISDN-PRI problems. Since a problem at a lower layer affects upper layers, layers are investigated from low to high. In the flowchart, the DS1 facility is layer 1, the ISDN-PRI D-channel is layer 2, and the ISDN trunks are layer 3. Transient problems are diagnosed on Page 2 of the flowchart. For problems with PRI endpoints (wideband), see the following section, "Troubleshooting ISDN-PRI Endpoints (Wideband)" on page 5-27.

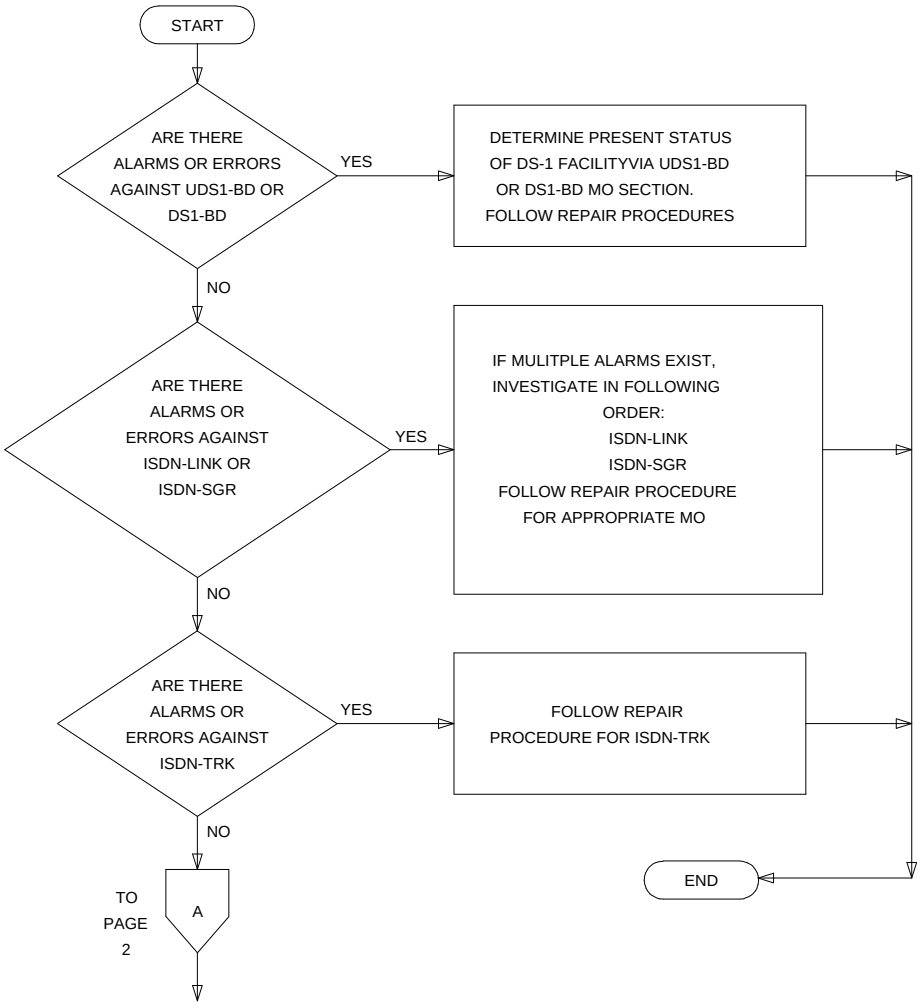

Figure 5-8. Troubleshooting ISDN-PRI (Page 1 of 2)

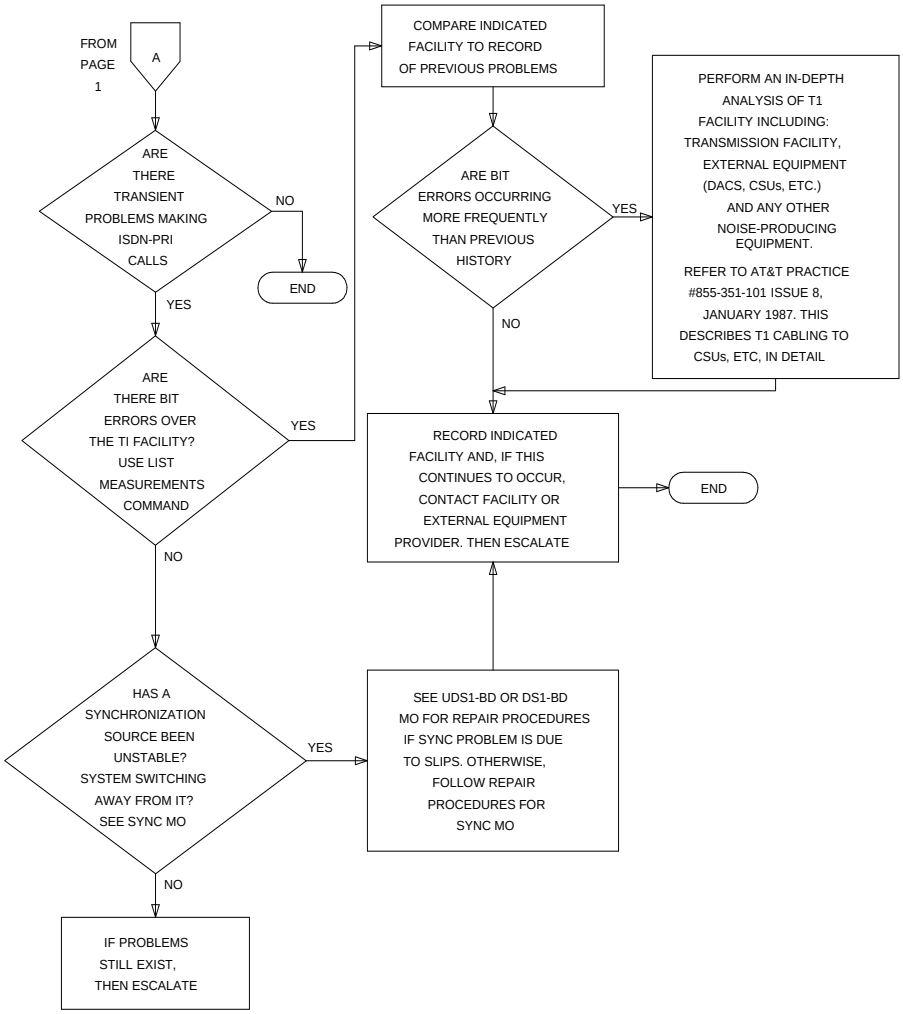

Figure 5-9. Troubleshooting ISDN-PRI (Page 2 of 2)

Troubleshooting ISDN-PRI Endpoints (Wideband)

The following flow chart defines a layered approach when troubleshooting PRI endpoint problems. Because problems at lower layers affect upper layers, layers are investigated from low to high. In this procedure, the DS1 facility is layer 1, the TN1655 Packet Interface is layer 2, and the PRI endpoint ports are layer 3.

The troubleshooting procedure described here is limited to diagnosing faults between the switch and the line-side PRI terminal adapter or ISDN-PRI endpoint equipment. Problems encountered on the network-side of a wideband connection or problems with end-to-end equipment compatibility are beyond the scope of this section.

START

↓

Are there alarms or errors against any of the following maintenance objects: UDS1-BD PKT-INT SYS-LINK ISDN-LNK ISDN-SGR PE-BCHL	YES →	Resolve those alarms or errors in the order listed at left by following procedures for the appropriate maintenance object in Chapter 9, "Maintenance Object Repair Procedures".
↓ NO		
Check out the status of the endpoint equipment or Terminal Adaptor. Do this at the endpoint, not at the G3-MT on the switch. Does the adaptor or endpoint indicate problems?	YES →	Follow repair procedures recommended by the provider of the Terminal Adapter or endpoint equipment.
↓ NO		
Check administration at the endpoint and on the switch (for example, port boundary width). Are they inconsistent?	YES →	Correct the administration so that both ends match.
↓ NO		
Does every call fail or are the failures transient?	Always Fails →	Check the health of the application equipment (for example, the video codec) and that of the DEFINITY network. If constant failures persist, follow normal escalation procedures.
↓ Transient Failures		
Use **list measurements ds1** to check for bit errors over the DS1 interface between the switch and the terminal adapter or endpoint equipment.	Bit Errors →	Perform an in-depth analysis of the DS1 interface including premises distribution wiring, endpoint equipment, and any other possible source of noise. If the problem cannot be isolated, follow normal escalation procedures.
↓ No bit errors		
Check for alarms and errors against SYNC. Has a synchronization source been unstable? Has the system switched synch sources?	YES →	Follow procedures described in SYNC in Chapter 9, "Maintenance Object Repair Procedures".
↓ NO		
Follow normal escalation procedures.		

Troubleshooting ISDN-BRI/ASAI Problems

Troubleshooting ISDN-BRI/ASAI problems can be a complex and involved procedure. The reason for this is that ISDN-BRI devices communicate with the SPE over the Packet Bus, as opposed to the TDM Bus. Therefore, it is possible for failures of other Packet Bus-related system components to cause problems with ISDN-BRI devices. Figure 5-10 below shows the connectivity of the Packet Bus as it applies to ISDN-BRI signaling.

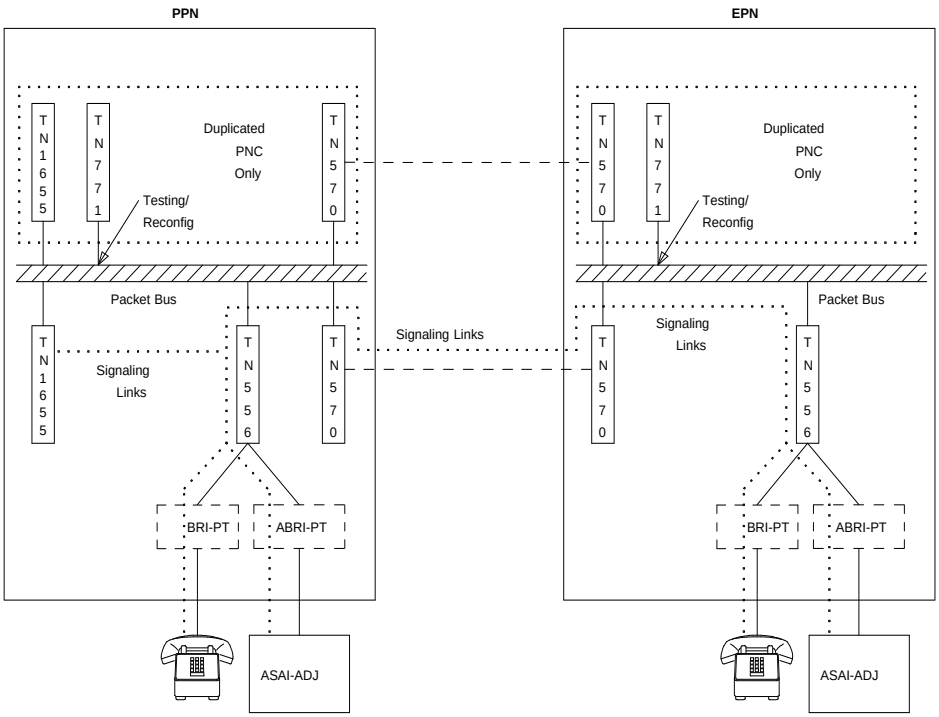

Figure 5-10. ISDN-BRI/Packet Bus Connectivity

The flowchart below describes the steps that should be taken to isolate and resolve ISDN-BRI problems. The order in which you should examine the maintenance objects is determined by looking at how wide-spread the failure is. For example, since all ISDN-BRI devices communicate with the TN1655 Packet Interface circuit pack, this MO should be examined early in the sequence. On the other hand, a failure of a TN570 circuit pack may cause ISDN-BRI failure in an EPN, but could not be the cause of a failure in the PPN.

NOTE:
If the flowchart query ‘‘Is the problem affecting MOs on multiple BRI-BD circuit packs?’’ is reached, and the port network in question has only one ISDN-BRI circuit pack, then assume that the answer is ‘‘Yes’’ and follow the repair procedure for PKT-BUS.

When directed by the flow chart to refer to the Maintenance documentation for a specific MO, keep in mind that the repair procedure for that MO may refer you to another MO’s repair procedure. The flowchart tries to coordinate these activities so that a logical flow is maintained if the ISDN-BRI problems are not resolved with the first set of repair procedures.

These following **status** commands may also be useful when diagnosing ISDN-BRI problems:

- **status port-network**
- **status packet-interface**
- **status bri-port**
- **status station**
- **status data-module**

For descriptions of these commands, refer to Chapter 8, "Maintenance Commands".

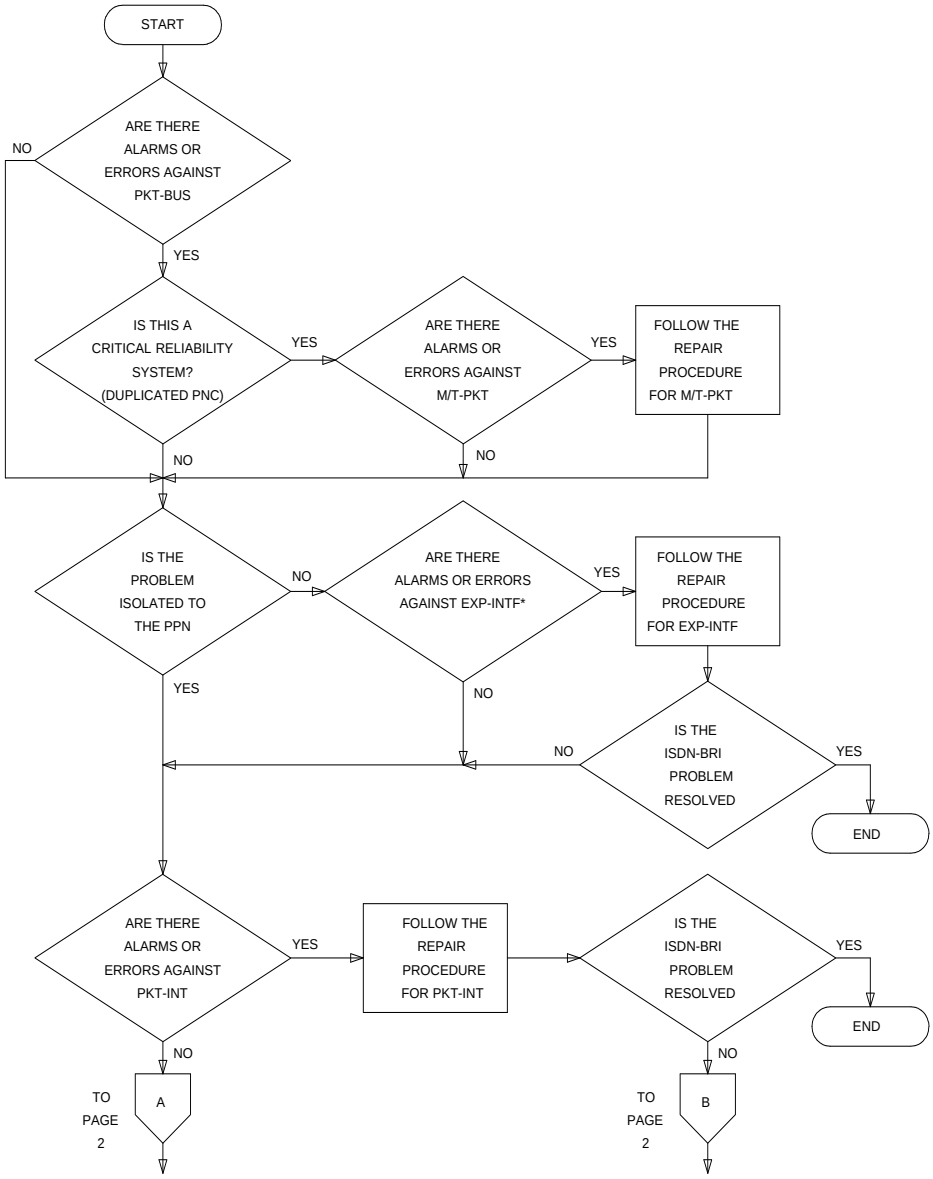

Figure 5-11. Troubleshooting ISDN-BRI Problems (Page 1 of 2)

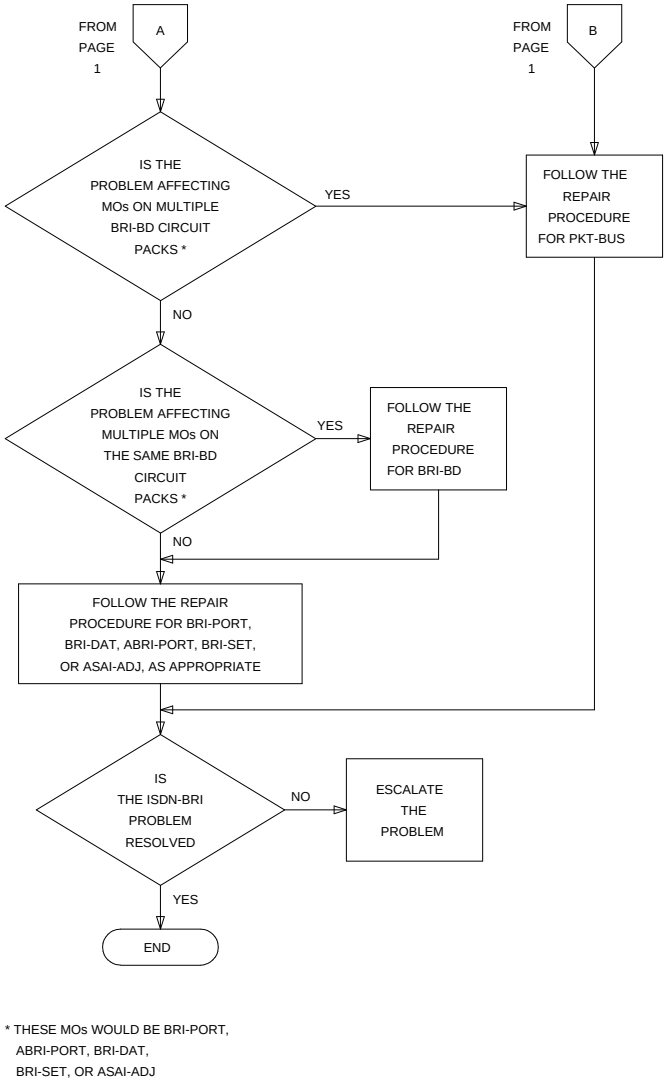

* THESE MOs WOULD BE BRI-PORT, ABRI-PORT, BRI-DAT, BRI-SET, OR ASAI-ADJ

Figure 5-12. Troubleshooting ISDN-BRI Problems (Page 2 of 2)

Troubleshooting ISDN-PRI Test Call Problems

An ISDN-PRI test call is placed across an ISDN-PRI user-network interface to a previously designated number in order to test ISDN capabilities of the switch, the trunk and the far end. An ISDN-PRI test call is also a maintenance procedure concerned with the identification and verification ISDN-PRI user-network interface problems. The ISDN-PRI test call can access ISDN-PRI trunks only.

An ISDN-PRI test call can be placed only if the circuit translates to an ISDN-PRI trunk. An ISDN-PRI test call can be originated via either the *synchronous* or the *asynchronous* method. Each method is described below.

NOTE:
Before attempting to make an ISDN-PRI test call to the public network (that is, the network is the far-end), make sure that test call service is provisioned by the network. The user must subscribe to Test Type 108 service and have the correct far-end test call number administered on the trunk group form for the call to be allowed.

Synchronous Method

One command is used in this method to start, stop and query an ISDN-PRI test call. In the synchronous method, an outgoing ISDN-PRI test call may be part of one of the following *long* test sequences entered at the terminal:

- **test trunk grp/mbr long [repeat #]**
- **test port UUCSSpp long [repeat #]**
- **test board UUCSS long [repeat #]**

The **long** qualifier must be entered in the above commands in order for the ISDN test call to run. The repeat number (#) can be any number from 1 through 99 (default = 1).

The following information is displayed in response to the above commands:

- Port: The port address (UUCSSpp) is the port network number, carrier designation, slot, and circuit of the maintenance object under test.
- Maintenance Name: The type of maintenance object tested.
- Test Number: The actual test that was run.
- Test Results: Indicates whether the test passes, fails, or aborts.
- Error Code: Additional information about the results of the test (See the ISDN-TRK section of Chapter 9, "Maintenance Object Repair Procedures" for details.

Asynchronous Method

The asynchronous method requires a Maintenance/Test circuit pack to be present in the system. In this method, four commands are used to start, stop, query and list an outgoing ISDN-PRI test call:

Start:	**test isdn-testcall grp/mbr[minutes]**
Stop:	**clear isdn-testcall grp/mbr**
List:	**list isdn-testcall**
Query:	**status isdn-testcall <grp>/<mbr>**

Before placing an outgoing ISDN-PRI test call, verify that the Feature Access Code has been administered on the System Features Form, and that the Far End Test Line Number and TestCall Bearer Capability Class (BCC) have been administered on the Trunk Group Administration Form. Furthermore, if the ISDN-PRI trunk is of the cbc (call by call) service type, then the Testcall Service field on Trunk Group Administration Form must have been administered also.

To initiate an outgoing ISDN-PRI test call with the asynchronous method, issue the start command listed above, which enables you to specify a specific the trunk on which to originate the ISDN-PRI test call. An optional qualifier can be used that specifies in minutes (1 to 120) the duration of the test call. If no duration is specified, the default is either 8.4 or 9.6 seconds.

The following screen shows a typical response to the **test isdn-testcall** command:

```
test isdn-testcall

Port    Maintenance Name   Test Number   Test Result  Error Code
1B1501  ISDN-TRK             258           PASS
```

The displayed fields have the following meanings:

Port	The port address (UUCSSpp) is the port network number, carrier designation, slot, and circuit of the maintenance object under test.
Maint. Name	The type of maintenance object tested.
Test Number	The actual test that was run.
Test Results	Indicates whether the test passes, fails, or aborts.
Error Code	Additional information about the results of the test (See the ISDN-TRK section in Chapter 9, "Maintenance Object Repair Procedures" for details).

The functions of the **clear**, **list**, and **status** commands associated with the ISDN Testcall are summarized below. For more detailed information, refer to Chapter 8, "Maintenance Commands".

clear isdn-testcall: enables you to cancel an in-progress ISDN-PRI test call and allow another test call to start.

list isdn-testcall: enables you to list all the ISDN-PRI trunks in use for an ISDN-PRI test call in the system.

status isdn-testcall: enables you to check on the progress of an outgoing test call. When an outgoing ISDN-PRI test call completes in a specific port network, another ISDN-PRI trunk from the same port network is available for testing (regardless of whether the **status** information has been displayed).

Troubleshooting the Outgoing ISDN-Testcall Command

If the TestCall BCC field appears on the Trunk Group Administration Form, make sure the TestCall BCC field indicates the correct BCC for the service provisioned on the ISDN-PRI trunk. The TestCall BCC values are defined as follows:

0	Voice
1	Digital Communications Protocol Mode 1
2	Mode 2 Asynchronous
3	Mode 3 Circuit
4	Digital Communications Protocol Mode 0 (that is usually the default).

If the ISDN-PRI trunk is of type cbc make sure the TestCall Service field on the Trunk Group Administration Form indicates the correct service so that a network facility message can be sent across the ISDN-PRI network.

If the outgoing ISDN-PRI test call keeps aborting, make sure that the far-end device can handle DCP Mode 0 or DCP Mode 1.

NOTE:
Before attempting to make an ISDN-PRI test call to the public network (that is, the network is the far-end), make sure that test call service is provisioned by the network. The user must subscribe to Test Type 108 service and have the correct far-end test call number administered on the trunk group form for the call to be allowed.

Packet Bus Fault Isolation and Repair

The following procedures provide a means of isolating and correcting faults on both the packet bus and the various maintenance objects that use the packet bus. The packet bus is shared by all circuit packs that communicate on it, and a fault on one of those can disrupt communications over the packet bus. Furthermore, a circuit pack that does not use the packet bus can also cause service disruptions by impinging on the backplane or otherwise modifying the configuration of the bus. (this is discussed in more detail later). For these reasons, isolating the cause of packet bus failure can be complicated. This discussion provides a flowchart and descriptions of the tools and procedures used to isolate and correct packet bus faults.

This discussion is organized into the following sections which provide background information and troubleshooting procedures. The packet bus Fault Isolation Flowchart is intended to be the normal starting point for isolating and resolving packet bus problems. Before using it you should familiarize yourself with packet bus maintenance by reading the introductory sections.

- **Remote Maintenance versus On-Site Maintenance** discusses the strategy and the requirements for performing remote maintenance and on-site maintenance for the packet bus.
- **Tools for packet bus Fault Isolation and Correction** discusses the tools that are needed to isolate and correct packet bus faults.
- **What is the packet bus?** describes the packet bus, its use in G3r, and the types of faults that can occur on the packet bus. A diagram shows the physical and logical connections between circuit packs connected to the packet bus.
- **Circuit Packs that Use the packet bus** describes the various circuit packs, ports, and endpoints that use the packet bus. The section discusses how these maintenance objects interact, how a failure of one maintenance object can affect another, and failure symptoms of these maintenance objects.
- **Maintenance of the packet bus in G3r** describes the strategy of maintenance software for packet bus. Similarities and differences between the packet bus and the TDM Bus are discussed. An overview of the Fault Isolation and Correction Procedures is also presented.
- **The Maintenance/Test Circuit Pack (TN771)** discusses the use of the Maintenance/Test circuit pack in both packet bus fault isolation and other switch maintenance. The standalone mode of the Maintenance/Test circuit pack, which is used to perform on-site packet bus fault isolation and correction, is discussed in detail.
- **Packet bus Fault Isolation Flowchart** is the starting point for the troubleshooting process. It is used to determine if a failure of service is caused by the packet bus itself or by another maintenance object on the packet bus.

- **Packet bus Fault Correction** presents the procedures required to correct either a problem with the packet bus itself or one that is caused by a circuit pack connected to the Packet Bus.

Remote Maintenance versus On-Site Maintenance

Most packet bus fault isolation and repair procedures require a technician to be on-site. This is because a packet bus failures are caused by a hardware failure of either the packet bus itself or a circuit pack that is connected to it. Initial diagnoses can be made via use of the *packet bus Fault Isolation Flowchart*, but the Maintenance/Test Standalone Mode Procedure and the packet bus Fault Correction Procedure require that a technician be on-site. These procedures are presented with this requirement in mind.

The flowchart refers to the repair procedures in Chapter 9, "Maintenance Object Repair Procedures" for various maintenance objects. When a decision point is reached, a remotely located technician can refer to the appropriate section and attempt to resolve any fault conditions. Some procedures require on-site repair action. Keep in mind that failure of a maintenance object appearing early in the flowchart can cause alarms with maintenance objects that appear later in the flowchart. Multiple dispatches can be prevented by remotely checking subsequent stages on the flowchart and preparing the on-site technician for replacement of several components if necessary.

The Maintenance/Test packet bus port described below provides status information that is accessed with the **status port-network P** command and the PKT-BUS test sequence. The Maintenance/Test circuit pack may or may not be present at a customer site, depending on the configuration of the switch. If a Maintenance/Test circuit pack is not present, one must be taken to the site for diagnosing packet bus problems.

In a system with duplicated SPEs, an SPE interchange may resolve the packet bus problem. This operation can be executed remotely, and is discussed in *Packet Bus Fault Correction Procedures* below.

Tools for Packet Bus Fault Isolation and Correction

The following tools may be required on-site to perform packet bus fault isolation and correction.

- TN771 Maintenance/Test circuit pack for use in standalone mode, and the connectors and cables necessary to install it (see the *Maintenance/Test Circuit Pack* section).
- A replacement for the TN771 Maintenance/Test circuit pack in the system may be needed. See "Special Precaution Concerning the TN771" on page 5-55.

- A backplane pin-replacement kit may be required (see "Correcting Packet Bus Faults" on page 5-60) If the kit is not available, replacement of a carrier may be required.

What is the Packet Bus?

The packet bus is a set of 24 leads in the backplane of each Port Network. Twenty of these leads are data leads, three are control leads, and one lead is a spare. This distinction is important only for understanding why some circuit packs are able to detect only certain faults; the distinction does not affect fault isolation and repair. Each Port Network has its own packet bus and there is one packet bus maintenance object (PKT-BUS) in each port network. The packet bus is not duplicated as is the TDM Bus. There are however several spare leads on the packet bus and, in Critical Reliability systems (duplicated PNC), these spare leads are used to recover from some failures on the packet bus.

The packet bus carries various types of information:

- Signaling and data traffic destined for other port-networks and/or Center Stage Switches. The TN570 Expansion Interface circuit pack provides packet bus access for these connections.
- ISDN-BRI signaling information for ISDN-BRI stations, data modules and ASAI adjunct connections. The TN556 ISDN-BRI circuit pack provides packet bus access for these connections.
- X.25 signaling information and data traffic to support system adjunct applications. The TN577 Packet Gateway circuit pack provides packet bus access for these connections.
- ISDN-PRI signaling information carried in the D-channels of ISDN-PRI facilities connected to the switch. The TN464 Universal DS1 circuit pack provides packet bus access for these connections.
- System Port traffic to support various input/output devices such as dial-up modems and printers, as well as system adjunct applications. The TN553 Packet Data circuit pack provides packet bus access for these connections.

The SPE interface to the packet bus is the TN1655 Packet Interface circuit pack. When SPEs are duplicated, there is one TN1655 in each SPE. The TN771 Maintenance/Test Circuit Pack (discussed in detail later) provides packet bus maintenance testing and reconfiguration capabilities.

Packet Bus Faults

Two types of packet bus faults occur:

Shorts — A short occurs when different leads on the packet bus become electrically connected to each other. Such a connection can occur due to failures of various components: circuit packs, cables between carriers, TDM/LAN terminators, or bent pins on the backplane. A fault occurring during normal operation is usually caused by a circuit pack. A fault that occurs while moving circuit packs or otherwise modifying the switch is usually due to bent pins on the backplane.

Opens — An open occurs when there is a break on the packet bus such that the electrical path to the termination resistors is interrupted. Usually, this break is caused by a failed TDM/LAN cable or terminator. A less likely possibility is a failure in the backplane of a carrier.

Shorts are far more common than opens, since they can be caused by incorrect insertion of a circuit pack. It is possible for a circuit pack to be the cause of a packet bus fault but still operate trouble-free itself. For example, the insertion of a TDM-only circuit pack such as a TN754 Digital Line could bend the packet bus pins on the backplane, but remain unaffected since it does not communicate over the packet bus.

Packet bus faults do not necessarily cause service interruptions, but shorts on it usually do. Depending on what leads are defective, the system may be able to recover and continue to communicate. While this allows uninterrupted service, it makes isolating the fault difficult. The Maintenance/Test circuit pack provides the capability to detect, and, in some cases, correct packet bus faults.

Packet Bus Connectivity

Figure 5-13 below shows the circuit packs that communicate on the packet bus. Logical and physical connections are illustrated. Connectivity with multiple expansion port networks is similar.

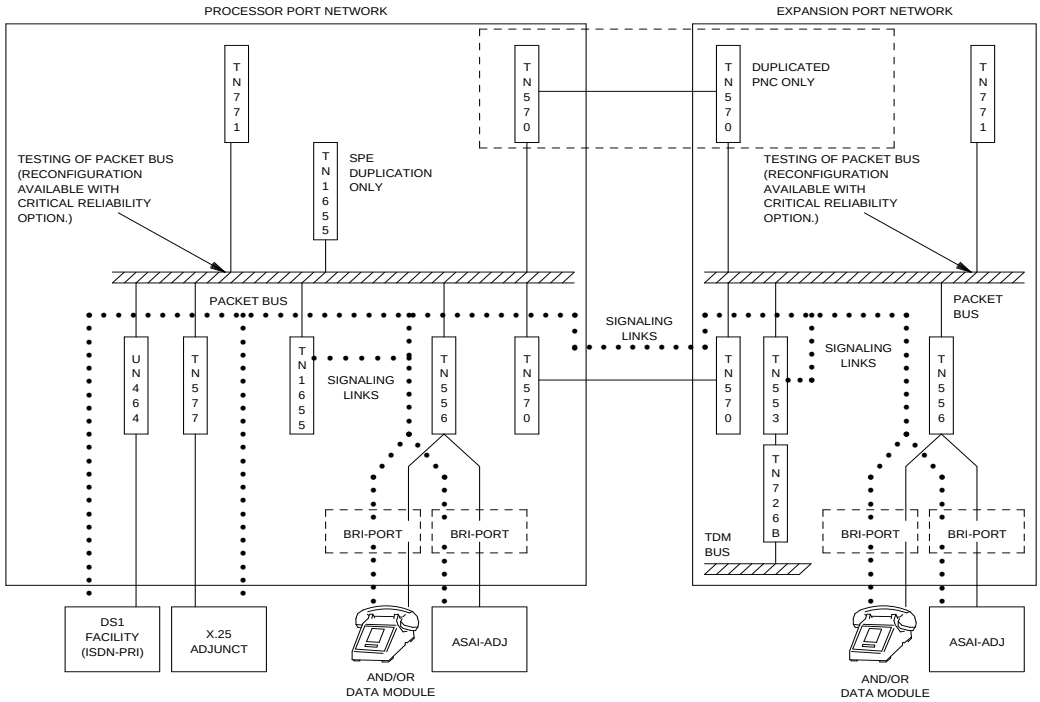

Figure 5-13. Packet Bus Connectivity

For more details on connectivity, refer to Chapter 9, "Maintenance Object Repair Procedures" for the appropriate circuit packs as follows:

- TN1655 Packet Interface: PKT-INTF
- TN570 Expansion Interface: EXP-INTF
- TN556 ISDN-BRI: BRI-BD, BRI-PORT, ABRI-PORT, BRI-SET, BRI-DAT, ASAI-ADJ
- TN577 Packet Gateway: PGATE-BD, PGATE-PT
- TN553 Packet Data: PDATA-BD, PDATA-PT
- TN464 Universal DS1: UDS1-BD, ISDN-LNK
- TN771 Maintenance/Test: M/T-BD, M/T-DIG, M/T-PKT

Circuit Packs That Use the Packet Bus

This section describes the circuit packs that use the packet bus and the effects of circuit pack and bus failures on each other.

Seven circuit packs can use the packet bus: The maintenance objects pertaining to each circuit pack, (described further in Chapter 9, "Maintenance Object Repair Procedures"), are listed in brackets.

- **TN1655 Packet Interface** [PKT-INTF] provides the SPE interface to the packet bus (as the UN332 MSSNET does to the TDM Bus). All traffic on the packet bus passes through the Packet Interface. The Packet Interface can detect some control lead failures and many data lead failures via parity errors on received data.
- **TN570 Expansion Interface** [EXP-INTF] connects the Port Networks (PNs) in the system. (Only TN570s can be used in G3r). All Packet traffic between PNs passes through a pair of TN570s (one in each port network). The Expansion Interface can detect some control lead failures, and many data lead failures via parity errors on received data.
- **TN556 ISDN-BRI circuit pack** [BRI-BD, BRI-PORT, ABRI-PORT, BRI-SET, BRI-DAT, ASAI-ADJ] carries signaling information for ISDN-BRI station sets and data modules, as well as signaling information and ASAI messages between the SPE and an ASAI adjunct. The ISDN-BRI circuit pack has the same fault detection capabilities as the TN570 Expansion Interface.
- **TN577 Packet Gateway circuit pack** [PGATE-BD, PGATE-PT] provides X.25 connectivity to support external system adjuncts such as Audix® and DCS. The packet bus carries both signaling and customer traffic. The Packet Gateway circuit pack has the same fault detection capabilities as the TN570 Expansion Interface.
- **TN553 Packet Data circuit pack** [PDATA-BD, PDATA-PT] connects via a backplane cable to a TN726B Data Line circuit pack in an adjacent carrier slot. Together, the two circuit packs perform a protocol conversion from mode 3 packet bus traffic originating in the SPE to mode 2 TDM Bus traffic destined for external system devices and adjuncts. This connectivity is referred to as a *System Port*. System Ports support devices and adjuncts such as the System Printer, the PMS Journal Printer, the PMS Wakeup Log Printer, data terminals, remote administration terminals, and equipment to support the Call Detail Recording (CDR) feature. System Ports are also used for saving and restoring System Announcements. The packet bus carries both signaling and data for the Packet Data circuit pack. The Packet Data circuit pack has the same fault detection capabilities as the TN570 Expansion Interface.
- **TN464 Universal DS1 circuit pack** [UDS1-BD, ISDN-LNK] supports ISDN-PRI communications over an attached DS1 facility. It transports of D-channel signaling information over the packet bus, and B-channel data over the TDM bus. The Universal DS1 circuit pack has the same fault detection capabilities as the TN570 Expansion Interface.
- **TN771 Maintenance/Test circuit pack** [M/T-BD, M/T-DIG, M/T-PKT, M/T-ANL] is the workhorse of packet bus maintenance. This circuit pack can detect all packet bus failures for the Port Network in which it resides. In Critical Reliability systems (duplicated PNC), this circuit pack enables

the reconfiguring of the packet bus around a small number of failed leads. The TN771D circuit pack provides a standalone mode (one that does not involve communication with the SPE), for inspecting the packet bus for faults. Standalone mode is a critical tool for troubleshooting packet bus faults.

NOTE:
All Maintenance/Test circuit packs in a G3r must be of vintage TN771D or later. This circuit pack is also used for ISDN-PRI trunk testing (M/T-DIG) and ATMS trunk testing (M/T-ANL).

Effects of Circuit Pack Failures on the Packet Bus

Certain failures of any of the above circuit packs can disrupt traffic on the packet bus Some failures cause packet bus failures with corresponding alarms, while others cause service outages without alarming the packet bus, (although the failed circuit pack should be alarmed).

Packet bus circuit pack failures affect the bus in the following ways:

- **TN1655 Packet Interface**. A failure of the Packet Interface typically causes all Packet traffic in the system to fail. As a result,
  - Expansion Port Networks and Center Stage Switches are disabled.
  - ISDN-BRI sets are not able to make or receive calls.
  - Communication with ASAI adjuncts fail
  - X.25 communications with external adjuncts fail.
  - System Ports are disabled.
  - ISDN-PRI D-channel signaling is disabled.

  If the failure is on the packet bus interface, the packet bus may be alarmed as well.

  In a system with duplicated SPEs, there is one TN1655 Packet Interface in each SPE. If a Packet Interface failure in the active SPE causes a packet bus disruption, an SPE interchange may restore service. In other cases, replacement of the circuit pack may be required before service is restored.

- **TN570 Expansion Interface**. A failure of the Expansion Interface typically causes all packet traffic in the connected EPN or Center Stage Switch to fail. If the failure is on the packet bus interface, the packet bus may be alarmed as well.

  If an active Expansion Interface failure causes a packet bus disruption in a Critical Reliability system (duplicated PNC), a PNC Interchange may restore service. In other cases, replacement of the circuit pack may be required before service is restored.

- **TN556 ISDN-BRI Circuit Pack**. A failure of the ISDN-BRI circuit pack typically causes some or all ISDN-BRI sets and data modules and/or an ASAI adjunct connected to the circuit pack to stop functioning. If the failure is on the circuit pack's packet bus interface, the packet bus may be alarmed as well.
- **TN577 Packet Gateway Circuit Pack**. A failure of the Packet Gateway circuit pack disrupts communications with the adjunct (for example, Audix, DCS) connected to the far end of the X.25 link. If the failure is on the circuit pack's packet bus interface, the packet bus may be alarmed as well.
- **TN553 Packet Data Circuit Pack**. A failure of the Packet Data circuit pack disrupts System Port traffic. If the failure is on the circuit pack's packet bus interface, the packet bus may also be alarmed. Applications that use System Ports include:
  - Saving and restoring announcements
  - Call Detail Recording (CDR)
  - Journal Printer for the Property Management System (PMS)
  - Wakeup Log Printer for the Property Management System (PMS)
  - System Printer
  - Data Terminals
  - Remote administration terminals
- **TN464 Universal DS1 Circuit Pack**. A failure of the Universal DS1 Circuit Pack disrupts ISDN-PRI signaling traffic carried on the D-channel. The loss of that signaling may impact the pack's 23 B-channels. If the D-channel supports Non Facility Associated Signaling (NFAS), the B-channels of up to 20 other DS1 circuit packs may also be affected. In cases where all 24 channels of the circuit pack are B-channels, packet bus related failures may not affect the B-channels, since only D-channel signaling is carried on the packet bus. If the failure is on the circuit pack's packet bus interface, the packet bus may be alarmed as well.
- **TN771 Maintenance/Test**. A failure of the Maintenance/Test may cause an incorrect indication of a packet bus failure or the inability to detect such a failure. If the failure is on the packet bus interface, the packet bus may be alarmed as well.

Failure of any circuit pack's bus interface may alarm the packet bus due to shorting of the packet bus leads. This typically disrupts *all* packet bus traffic in the affected port network. Recall that a failure of the packet bus in the PPN affects packet traffic in the EPNs as well. Some packet bus failures do not affect all endpoints, so a packet bus failure cannot be ruled out just because some packet service is still available.

A circuit pack can fail in a manner such that it transmits bad data on the packet bus. If the Packet Interface so fails, all Packet traffic is disrupted. Such a failure

on an Expansion Interface may disrupt all Packet traffic in that port network. If an ISDN-BRI circuit pack fails such that it transmits bad data, all devices connected to the circuit pack fail to function. This failure may also disrupt the entire packet bus whenever the circuit pack tries to transmit data. Such a disruption may be indicated by packet bus alarms that occur and go away, intermittent failures of other packet circuit packs, and/or interference with other connected endpoints. These failures are difficult to isolate because of their intermittent nature. In most cases, the failed circuit pack is alarmed, and all connected endpoints on the circuit pack are out of service until the circuit pack is replaced. These symptoms help in isolating the fault.

Maintenance of the Packet Bus

The following topics are covered in this section:

- Comparison between the packet bus and the TDM Bus
- Packet Bus Maintenance Software
- Overview of Fault Correction Procedures

Packet Bus and TDM Bus: a Comparison

The packet and TDM busses have several similarities and differences. There are two physical TDM busses in each port-network. One of the busses can fail without affecting the other, but half of the call-carrying capacity is lost. There is *one* packet bus in each port-network. A failure of that bus can disrupt all packet traffic in that port network.

In the Critical Reliability systems, the Maintenance/Test circuit pack provides packet bus reconfiguration capabilities. This allows the packet bus to remain in service with up to three lead failures. There is no corresponding facility on the TDM Bus. Instead, the second physical TDM Bus continues to carry traffic until repairs are completed.

System response varies according by type of bus failure and whether or not the failure occurs in the PPN or an EPN. In an EPN, a catastrophic TDM Bus failure (one that affects both TDM Busses) disables *all* traffic in the port-network. A catastrophic packet bus failure affects only packet traffic, so that TDM traffic is unaffected, while all ISDN-BRI, ASAI, X.25, and ISDN-PRI signaling traffic is disrupted. The significance of this distinction depends on the customer's applications. A customer whose primary application requires ASAI would consider the switch to be out of service, while a customer with a large number of Digital/Analog/Hybrid sets and a small number of ISDN-BRI sets would probably not consider the packet bus failure a catastrophic problem. The only way an EPN packet bus failure can affect TDM traffic is via possible impact on system response time in a large switch due to running of ISDN-BRI endpoint maintenance. This should rarely happen because the packet bus maintenance software is able to prevent this for most faults (see the next section, "Packet Bus Maintenance Software").

If packet bus failure occurs in the PPN, the impact is much more widespread. Because the PPN packet bus carries the signaling and control links for all EPNs, PPN packet bus failure effectively removes all the EPNs from service, including both TDM and packet busses. Packet bus traffic in the PPN is also disrupted.

CAUTION:
Packet bus fault correction and fault isolation often involve circuit pack removal, which is destructive to service. Time devoted to destructive procedures should be minimized by the use of non-destructive ones wherever possible.

Packet Bus Maintenance Software

Packet bus maintenance software involves the usual set of maintenance object error conditions, tests, and alarms. These are described in the PKT-BUS section in Chapter 9, "Maintenance Object Repair Procedures". Because a packet bus failure can cause all BRI/ASAI endpoints in the affected Port Network, and all their associated ports and circuit packs, to report failures, special care must be taken to ensure that the flood of error messages does not overload the system and interfere with TDM Bus traffic. *When such a failure occurs*, circuit pack maintenance is affected in the following manner:

- In-line errors for the following maintenance objects which indicate possible packet bus failures are logged but *not acted upon:* BRI-BD, PGATE-BD, PDATA-BD, UDS1-BD.
- In-line errors for the following maintenance objects which indicate possible packet bus failures are *neither logged nor acted upon:* BRI-PORT, ABRI-PORT, PGATE-PT, PDATA-PT, ISDN-LNK.
- All in-line errors for the following maintenance objects are *neither logged nor acted upon:* BRI-SET, BRI-DAT, ASAI-ADJ.
- Circuit pack and port in-line errors that are not related to the packet bus, or that indicate a circuit pack failure, are acted upon in the normal fashion.
- Periodic and scheduled background maintenance is not affected.
- Foreground maintenance (for example, commands executed from the terminal) is not affected.

These interactions allow normal non-packet system traffic to continue unaffected, and they reduce the number of entries into the Error/Alarm Logs. If the packet bus failure is caused by a failed circuit pack, errors against the circuit pack should appear in the Error/Alarm Logs as an aid for fault isolation. The above strategy is implemented when:

- In-line errors indicate a possible packet bus failure reported by two or more Packet circuit packs.
- A packet bus Uncorrectable report is sent from the Maintenance/Test packet bus port (M/T-PKT).

When such a failure occurs, a PKT-BUS error is logged. Refer to the PKT-BUS section in Chapter 9, "Maintenance Object Repair Procedures" of this document for more detailed information.

Fault Correction Procedures: Overview

This section gives an overview of the procedures used to isolate the cause of and correct packet bus faults. These procedures are applicable to all G3r systems. Details are presented in following sections.

1. Procedure 1 attempts to determine if a circuit pack that interfaces to the packet bus is the cause of the packet bus problem. This involves examination of the Error and Alarm logs followed by the usual repair actions.
2. If the packet bus problem persists, the technician removes port circuit packs (those in purple slots) to look for circuit packs that have failed and/or damaged the packet bus pins.
3. If the packet bus problem persists, the technician performs the same procedure for control complex circuit packs.
4. If the problem persists, or if the packet bus faults are known to have open leads, the technician replaces bus terminators and cables. If this does not resolve the problem, the technician reconfigures the carrier connectivity of the port network to attempt to isolate a faulty carrier.

The Maintenance/Test Circuit Pack (TN771)

The TN771 Maintenance/Test circuit pack provides the following functions:

- Analog Trunk (ATMS) Testing
- Digital Port Loopback Testing
- ISDN-PRI Trunk Testing
- Packet Bus Testing
- Packet Bus Reconfiguration (Critical Reliability systems only)

The PPN always contains a TN771. Critical Reliability systems have a TN771 in each EPN. A TN771 is optional in EPNs of other configurations. The ISDN-PRI Trunk Testing functions are discussed in the ISDN-LNK and M/T-DIG sections in Chapter 9, "Maintenance Object Repair Procedures". The Digital Port Testing functions are discussed in the DIG-LINE, DAT-LINE, PDMODULE, TDMODULE, PGATE-PT, PDATA-PT, MODEM-PT, and M/T-DIG sections in Chapter 9, "Maintenance Object Repair Procedures". The Analog Trunk Testing functions are discussed in the TIE-TRK, DID-TRK, CO-TRK, AUX-TRK, and M/T-ANL sections in Chapter 9, "Maintenance Object Repair Procedures".

NOTE:
All TN771 circuit packs used in G3r must be of TN771D vintage or later.

TN771 Packet Functions

The Maintenance/Test packet bus port (M/T-PKT) provides the packet bus testing and reconfiguration capabilities. When the port is in service, it continuously monitors the packet bus for faults and fault recoveries, and reports results to PKT-BUS maintenance.

The yellow LED on the TN771 Maintenance/Test circuit pack provides a visual indication of the state of the packet bus:

Flashing — Flashing of the yellow LED at the rate of once per second indicates that there are too many faults for the Maintenance/Test packet bus port to recover by swapping leads. *The packet bus may be unusable*. If the failures detected are open lead failures, the packet bus may still be operating.

On steady — The Maintenance/Test packet bus port has swapped leads on the packet bus to correct a fault. *The packet bus is still operating.* Or, one of the other ports on the Maintenance/Test circuit pack is in use.

NOTE:
You must first busy out the Maintenance/Test circuit pack ports used for other than packet bus testing before using the Maintenance/Test circuit pack to help resolve packet bus faults. This is done by entering **busyout port** UUCSS**01, busyout port**UUCSSl**02**, and **busyout port** UUCSS**03**. Be sure to release these ports when the process is completed.

Off — There is no packet bus fault present.

NOTE:
It takes 5 to 10 seconds for the LED to respond to a change in the state of the packet bus.

During normal switch operation, the Maintenance/Test provides visual feedback of the packet bus state. When in standalone mode (see the next section, “TN771 in Standalone Mode”), these visual indications are still present, but the packet bus is never reconfigured. The yellow LED either blinks or is off.

TN771 in Standalone Mode

In TN771 standalone mode, a terminal is connected to the Maintenance/Test circuit pack with an Amphenol connector on the back of the cabinet. This setup allows direct inspection of the packet bus and identifies shorted or open leads. This mode does not use the usual G3-MT Maintenance User Interface and is thus available even if switch is not in service. When in standalone mode, the TN771 does not reconfigure the packet bus.

Required Hardware

- TN771D: Standard or High Reliability systems may not have a TN771 in each EPN. (Use **list configuration** to determine if this is so.) When this is the case, one must be taken to the site. See the following section, "Special Precaution Concerning the TN771" on page 5-55.
- Terminal or PC with terminal-emulation software: The EIA-232 (RS-232) port should be configured at 1200 baud, no parity, 8 data bits, and one stop bit. This is *not* the same configuration as for the G3-MT. If a terminal configured as a G3-MT is used, change the SPEED field from 9600 to 1200 on the terminal's options setup menu. (This menu is accessed on most terminals by pressing the CTRL and F1 keys together. On the 513 BCT, press SHIFT/F5 followed by TERMINAL SET UP). Remember to restore the original settings before returning the G3-MT to service.
- 355A EIA-232 Adapter (COMCODE 105 012 637), illustrated below.
- 258B Six-Port Male Amphenol Adapter (COMCODE 103 923 025), illustrated below. A 258A Adapter and an extension cable can also be used.
- D8W 8-wire modular cable of an appropriate length to connect the 258A on the back of the cabinet to the 355A adapter. The relevant COMCODE is determined by the length of the cable, as follows:
  - 103 786 786 (7 feet)
  - 103 786 802 (14 feet)
  - 103 786 828 (25 feet)
  - 103 866 109 (50 feet)

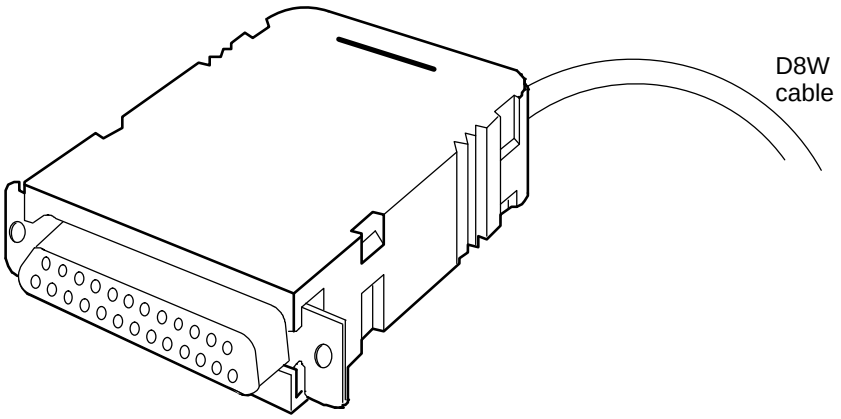

Figure 5-14. 355A EIA-232 Adapter

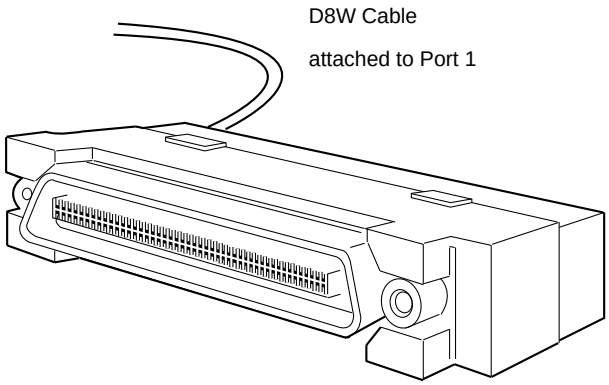

Figure 5-15. 258A Six-Port Male Amphenol Adapter

Slot Selection for Standalone Mode

When selecting a carrier slot to use for standalone mode in a port network that does not already contain a TN771, keep the following points in mind:

- A port circuit slot (indicated by a purple label) should be used. The service slot (slot 0) *cannot* be used for standalone mode, although a TN771 may normally be installed there.
- -5 volt power supply must be available in the carrier. (Refer to CARR-POW in Chapter 9, "Maintenance Object Repair Procedures" for a description of carrier power supply units.)
- A slot in the A carrier is preferable for EPNs if the above conditions are met.

Entering and Exiting Standalone Mode

When in standalone mode, the red LED on the TN771 is lit This is normal and serves as a reminder to remove the TN771 from standalone mode.

CAUTION:
The TN771 in standalone must be the only TN771 in the port network. If a TN771 is already in the port network, place that TN771 in standalone mode. Do not insert a second TN771. Otherwise, the system is not able to detect the extra circuit pack and will behave unpredictably.

CAUTION:
If the TN771 packet bus port has reconfigured the packet bus in a Critical Reliability system (indicated by error type 2049 against PKT-BUS), placing

the Maintenance/Test in standalone mode causes a loss of service to the packet bus. In this case, this procedure disrupts service.

For port networks with a TN771D already installed:

1. Ensure that Alarm Origination is suppressed either at login or via **change system-parameters maintenance**.
2. Attach the 258A Six-Port Male Amphenol Adapter to the Amphenol connector on the back of the carrier corresponding to the TN771's slot. Connect one end of a D8W 8-wire modular cable to port 1 of the 258A. Connect the other end of the cable to a 355A EIA-232 Adapter. Plug the EIA-232 Adapter into the terminal to be used, and turn the terminal on.
3. Reseat the TN771 circuit pack.

NOTE:
On a Critical Reliability system, this causes a MINOR OFF-BOARD alarm to be raised against PKT-BUS. This alarm is not resolved until the TN771's packet bus port (M/T-PKT) is returned to service. To ensure that PKT-BUS alarms have been cleared, it may be necessary to restore the TN771 to normal mode.

For port networks without a TN771D installed:

1. Attach the 258A Six-Port Male Amphenol Adapter to the Amphenol connector on the back of the carrier corresponding to the slot into which the TN771 is to be inserted. Connect one end of a D8W 8-wire modular cable to port 1 of the 258A. Connect the other end of the cable to a 355A EIA-232 Adapter. Plug the EIA-232 Adapter into the terminal to be used, and turn the terminal on.
2. Insert the TN771 circuit pack into the slot. The system will not recognize the presence of the circuit pack.

If the standalone mode is entered successfully, the following is displayed on the connected terminal:

```
                    TN771 STANDALONE MODE

            (Type "?" at the prompt for help)



Command:
```

CAUTION:
If the above display does not appear, check the wiring between the terminal and the TN771, and the terminal parameters settings. If these are correct, the TN771 may be defective. In such a case, use the following procedures to exit standalone mode and then test the Maintenance/Test circuit pack. Refer to M/T-BD and M/T-PKT in Chapter 9, "Maintenance Object Repair Procedures". If the TN771 fails while in standalone mode, the message `TN771 circuit pack failed` *is displayed, and no further input is accepted on the terminal. The circuit pack must be replaced.*

To exit standalone mode:

1. Remove the 258A Adapter from the Amphenol connector.
2. If the TN771 was installed for this procedure, remove it. Otherwise, reseat the TN771.
3. If **change system-parameters maintenance** was used to disable alarm origination, re-enable it now.

Using Standalone Mode in Packet Bus Fault Isolation and Correction

When the TN771 is in standalone mode, three commands are available:

ds	Displays the current state of the packet bus leads.
dsa	Toggles auto-report mode on and off. In auto-report mode, the state of the packet bus leads are displayed and the terminal beeps whenever a change occurs.
?	Displays the available commands.

Below is an example of a standalone mode display. The symbols above the line represent specific leads on the backplane. The bottom line indicates the following:

```
L L L L L L L L L H H H H H H H H H S S S L
P 0 1 2 3 4 5 6 7 8 P 0 1 2 3 4 5 6 7 8 S F B F
_____________________________________________
S S             O

Command:
```

O	Open lead
S	Shorted lead
blank	No fault

NOTE:
This information is available only from the standalone mode. It is not available from the G3-MT or a remote login.

Figure 5-16 below shows the location of the packet bus leads for a given slot as seen from the front and back of the carrier.

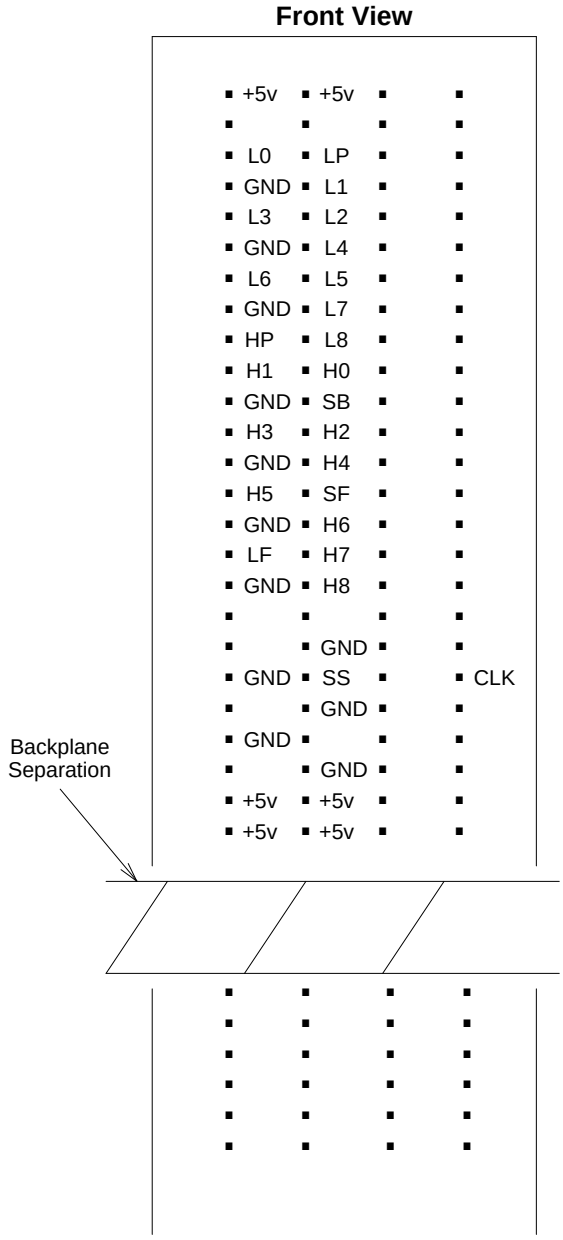

Figure 5-16. Packet Bus Leads on the Backplane

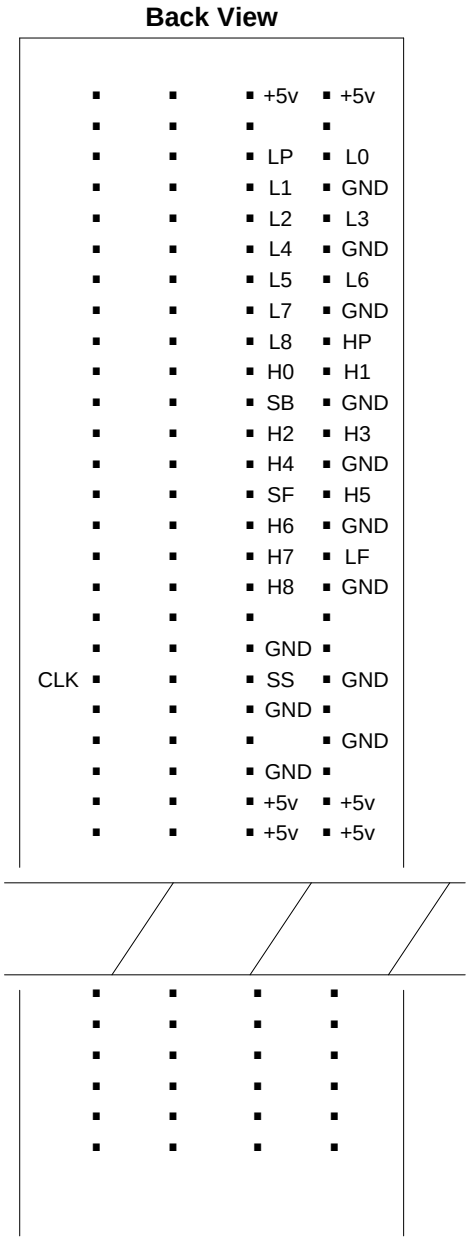

Figure 5-17. Packet Bus Leads on the Backplane

Special Precaution Concerning the TN771

A TN771 Maintenance/Test circuit pack must be taken to the customer site if:

- The Maintenance/Test packet bus port indicates that a Packet Bus fault is present by logging a Major or Minor alarm against PKT-BUS. A Major alarm is indicated in the error log by Error Type 513; a Minor alarm is indicated by Error Type 2049.
- Test #572 of the PKT-BUS test sequence is the only test that fails.

This precaution is taken because certain failures of the Maintenance/Test circuit pack can appear as packet bus failures. To ensure that the problem is indeed with the packet bus, proceed through the following steps:

1. Refer to M/T-PKT in Chapter 9, "Maintenance Object Repair Procedures" to correct any problems with the TN771 Maintenance/Test packet bus port.
2. If the TN771 Maintenance/Test circuit pack is replaced during this process, enter the **test pkt P** long command to determine if the packet bus faults have been resolved. If there are still packet bus problems, correct them by using the procedures in the sections that follow.
3. If the Maintenance/Test circuit pack was *not* replaced, enter **test pkt P**. Record the results (PASS/FAIL/ABORT) and error codes for Test #572.
4. Enter **status port-network P**. Record the information listed for PKT-BUS.
5. Busyout the Maintenance/Test circuit pack with **busyout board** UUCSS.
6. Replace the Maintenance/Test circuit pack with the new circuit pack.
7. Release the Maintenance/Test circuit pack with **release board** UUCSS.
8. Enter the **test pkt P** and **status port-network P** commands as described in Steps 2 and 3.
9. If the data matches the previously recorded data, a packet bus problem exists, and the original TN771 Maintenance/Test circuit pack is not defective. Reinsert the original TN771, and correct the packet bus problem by using the procedures in the sections that follow.
10. If the data does *not* match the previously recorded data, the original TN771 Maintenance/Test circuit pack is defective. If there are still indications of packet bus problems, correct them by using the procedures in the sections that follow.

Packet Bus Fault Isolation Flowchart

The flowchart below shows the steps to be taken for isolating and resolving packet bus problems. The order in which the maintenance objects should be examined can be determined by assessing how wide-spread the failure is. For example, since all ISDN-BRI devices communicate with the TN1655 Packet Interface circuit pack, this MO should be examined early in the sequence. On the other hand, a failure of a TN570 circuit pack in an EPN may cause ISDN-BRI failure in the EPN, but not in the PPN.

Whenever the flowchart refers to Maintenance Object documentation keep in mind that the repair procedure for that MO may in turn refer to another MO's repair procedure. The flowchart tries to coordinate these procedures so that a logical flow is maintained if the packet bus problems are not resolved via the first set of repair procedures. However, a packet bus failure can lead to a somewhat haphazard referencing of various MO procedures that may result in taking steps that are repetitive or unnecessary. If this occurs, return to the flowchart at the step that follows the reference to Chapter 9, "Maintenance Object Repair Procedures", and continue from there. The following **status** commands can also help diagnose packet bus problems, especially when logged in remotely. For a description of these commands, refer to Chapter 8, "Maintenance Commands".

status port-network P	**status packet-interface**
status pnc	**status bri-port**
status station	**status data-module**
status link	**status pms-link**
status sp-link	**status cdr-link**
status journal-link	

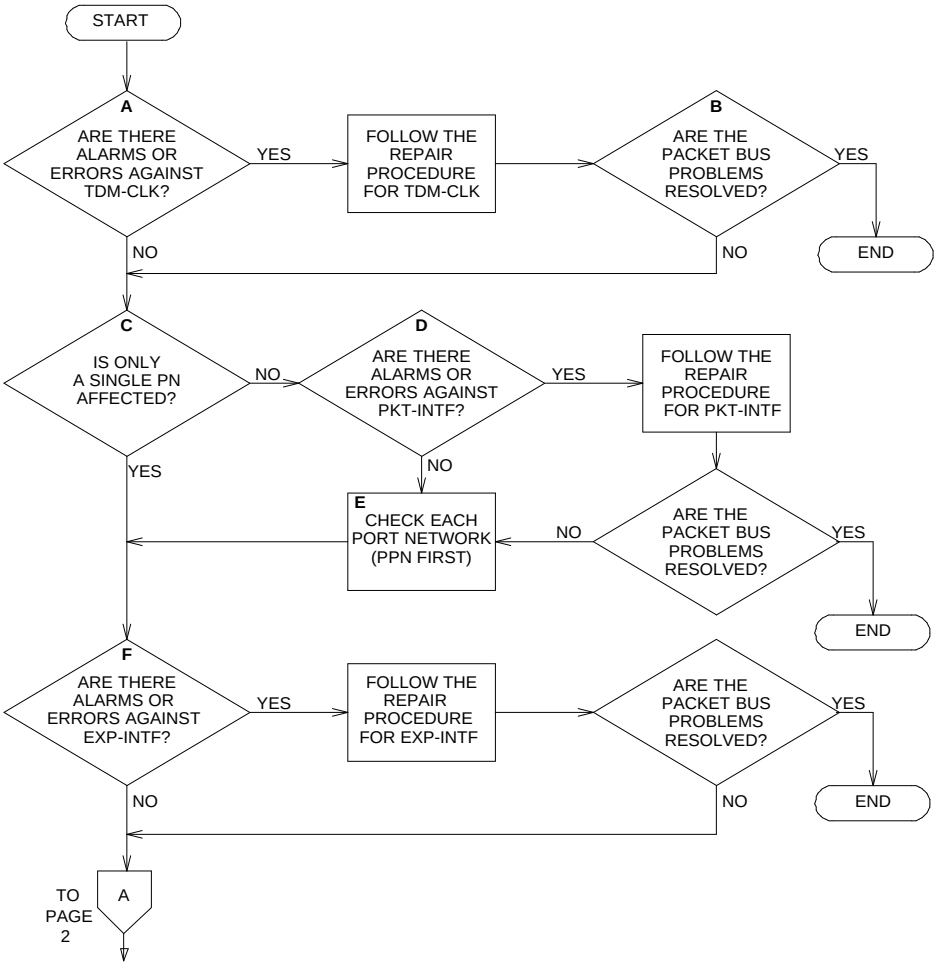

Figure 5-18. Troubleshooting Packet Bus Problems (Page 1 of 2)

Boldface letters in the flowchart refer to paragraphs in the explanatory section that follows.

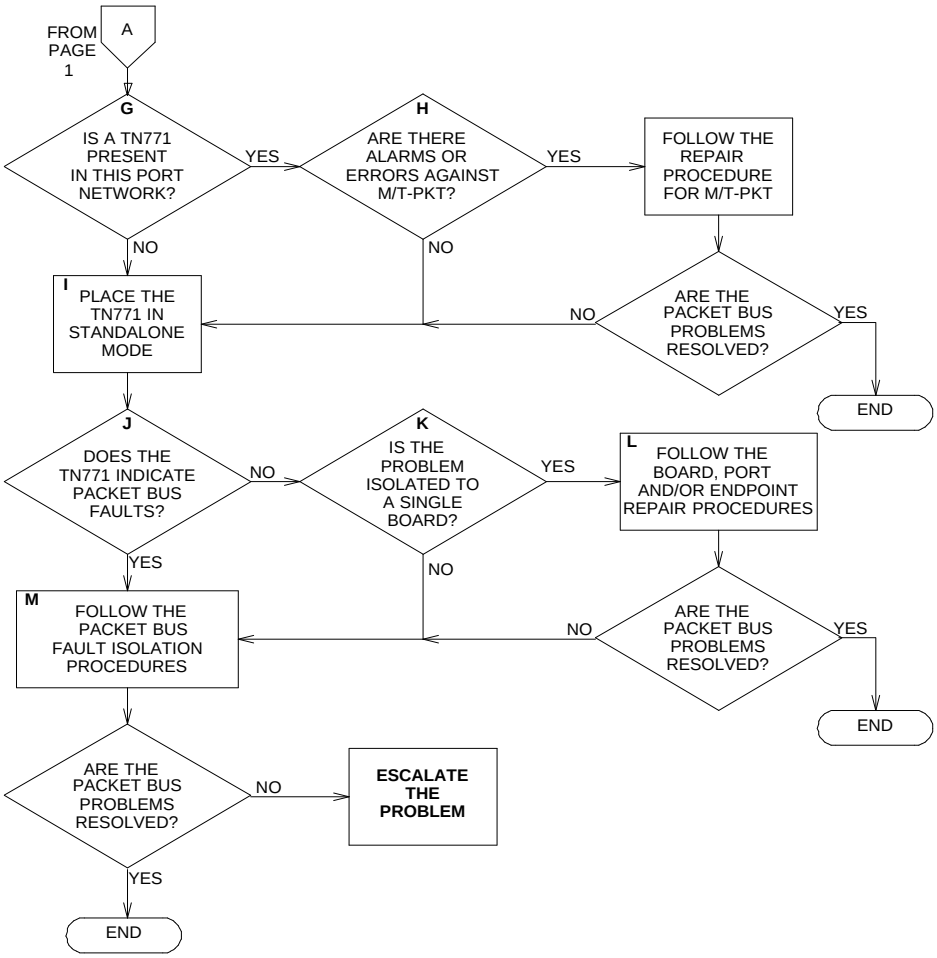

Figure 5-19. Troubleshooting Packet Bus Problems (Page 2 of 2)

Boldface letters in the flowchart refer to paragraphs in the explanatory section that follows.

FlowChart Notes

The following paragraphs refer by letter to corresponding entries in the preceding flowchart. Individual errors and alarms are not detailed in the flowchart. When referring to explanations of these in Chapter 9, "Maintenance Object Repair Procedures", any which do not refer explicitly to the TDM bus (except TDM-CLK) should be considered a possible cause of packet bus problems.

a. Problems with the system clock (TDM-CLK) can cause service disruptions on the packet bus. All alarms active against TDM-CLK should be resolved first, even if the explanation refers only to TDM bus. A packet bus problem cannot cause a TDM-CLK problem, but a TDM-CLK problem can cause a packet bus problem.

b. Throughout the flowchart, the question ‘‘Are the packet bus problems resolved?’’ refers to the problems that led you to this chart, and can involve several checks, such as:

   - Are all packet bus alarms resolved?
   - Are all packet circuit pack port and endpoint alarms resolved?
   - Are all ISDN-BRI stations/data modules, ASAI adjuncts, System Port supported adjuncts, Packet Gateway supported adjuncts, and ISDN-PRI D-channel links in service?
   - Does the Maintenance/Test packet bus port (in normal or standalone mode) still indicate a packet bus fault?

c. If only a single PN is affected, the Packet Interface is probably not the source of the problem. Nonetheless, if all of the ISDN-BRI, Packet Gateway, Packet Data, and Universal DS1 circuit packs are located in a single EPN, assume that the answer to this question is ‘‘No,’’ and check the Packet Interface.

d. A packet problem that affects more than one port network is probably caused by either a Packet Interface failure or a PPN packet bus failure. The Packet Interface is checked before the packet bus.

e. Because the packet bus in each port network is physically separate, each affected port network must be checked individually. The PPN should be checked first since any EPN packet problems are usually resolved once a PPN packet problem is resolved. After resolving the problem in one port network, make sure that problems in other port networks have also been resolved.

f. This step applies only when attempting to resolve an EPN packet bus problem. When checking the Expansion Interfaces in an EPN, be sure to check the corresponding one(s) in the PPN. (G3r supports only the TN570 Expansion Interface, not the earlier TN776 Port Network Interface).

g. If a TN771 is not present, one must be installed to accommodate the standalone mode. See the above section on standalone mode.

h. If a TN771 is present, it can fail in such a way that it eventually disrupts the packet bus or misinterprets a packet bus problem.

i. If work is being done on-site, follow the procedures described earlier in this discussion on standalone mode. If work is not being done on-site, go to the next step.

j. The answer yes if any of the following apply:

   - The TN771 in standalone mode indicates any faulty leads.

- Test #572 in the PKT-BUS test sequence fails.
- The **status port-network P** display indicates that faulty leads are present and the TN771 in the port network is known to be functioning correctly.

k. If the non-functional endpoints are isolated to a single circuit pack, that circuit pack is probably the cause of the problem.

l. Investigate errors and alarms in the following order:

   1. Circuit pack-level
   2. Ports
   3. Endpoints

m. Follow the procedures outlined later in this discussion. If the packet bus problem cannot be resolved with these procedures, follow normal escalation procedures.

Correcting Packet Bus Faults

The Status Port-Network Command

This command is described in Chapter 8, "Maintenance Commands". **Status port-network P** displays include the service state, alarm status, and, if the Maintenance/Test packet bus port is present, the number of faulty and open leads for the packet bus in the specified port-network. This information can be used to determine the urgency of the repair. In general, a service state of ‘‘out’’ indicates extreme urgency, while a service state of ‘‘reconfig’’ indicates moderate urgency.

NOTE:
Ultimately, the urgency of a repair is determined by the customer’s requirements. A customer who uses ISDN-BRI for station sets, or who relies heavily on packet bus supported system adjunct features like DCS, Audix, or CDR, probably considers a packet bus failure critical. On the other hand, a customer with little ISDN-BRI service and no adjunct features may consider even an uncorrectable packet bus fault unimportant, and may prefer to delay repairs due to their disruptive nature.

If background maintenance is running on the packet bus when the **status port-network** command is issued, the data reported for the packet bus may be inconsistent due to updating by the tests. If the data seems inconsistent, enter the command again.

If test results or the results of the **status port-network** command indicate that there are 24 faults on the packet bus, the problem is probably caused by faulty cables between carriers, or by defective or missing bus terminators. However, before proceeding, make sure that the Maintenance/Test packet bus port is not generating a false report by looking for an M/T-PKT error in the error log. Then test the Maintenance/Test packet bus port with **test port UUCSSpp**. See

"Special Precaution Concerning the TN771" on page 5-55 above if any problems are suspected.

NOTE:
If the carrier into which a TN771 Maintenance/Test circuit pack is inserted does not have a -5V power supply, the Maintenance/Test packet bus port reports 24 open leads in response to **status port-network**, or Test #572 of the PKT-BUS test sequence. Refer to CARR-POW maintenance in Chapter 9, "Maintenance Object Repair Procedures" to ensure that a -5 volt power supply is available.

Considerations for Duplicated Systems

Some packet bus-related components are duplicated in systems with one of the duplication options:

- In High Reliability systems (duplicated SPE, simplex PNC), Packet Interface circuit packs are duplicated with the SPEs, a Maintenance/Test circuit pack is required in the PPN, and Maintenance/Test packet bus reconfiguration is not enabled.
- In Critical Reliability Systems (duplicated SPE and PNC), the Packet Interface circuit packs are duplicated, Maintenance/Test circuit packs are required in all port networks, and packet bus reconfiguration by the Maintenance/Test circuit packs is enabled.

If a packet bus problem is caused by a duplicated component, switching to the standby component may alleviate the problem and isolate the faulty circuit pack. Start by executing the commands in the following list when they apply.

- **reset system interchange**: If this command resolves the packet bus problem, the problem is with the Packet Interface in the SPE which was just switched to standby. Refer to PKT-INTF in Chapter 9, "Maintenance Object Repair Procedures".
- **reset pnc interchange**: If this command resolves the packet bus problem, the problem is with the EIs or the link on the PNC (a or b) that just became the standby. Refer to EXP-INTF in Chapter 9, "Maintenance Object Repair Procedures".
- **set tone-clock**: If this command resolves the packet bus problem, the problem is with the Tone/Clock that just became the standby. Refer to TDM-CLK in Chapter 9, "Maintenance Object Repair Procedures" of this document.

Continue with the procedures in the next section.

Troubleshooting Procedures

Packet bus faults are usually caused by a defective circuit pack connected to the backplane, by bent pins on the backplane, or by defective cables or terminators that make up the packet bus. The first two faults cause shorts, while the third fault causes either shorts or opens.

There are four procedures for correcting packet bus faults. Which are used depends on the nature of the fault. For example:

- If the Maintenance/Test packet bus port is activated, and if there is an indication of open leads on the packet bus from **status port-network** or Test #572, go directly to Procedure 4. Procedures 1 through 3 try to locate faulty circuit packs or bent pins and these do not cause open faults.
- If there are both shorts and opens, start with Procedure 4, and return to Procedure 1 if shorts persist after the open leads are fixed.

CAUTION:
Packet bus fault isolation procedures involve removing circuit packs and possibly disconnecting entire carriers These procedures are destructive. Whenever possible, implement these procedures during hours of minimum system use.

CAUTION:
To replace the following circuit packs, follow instructions in the appropriate sections: Tone-Clock (TONE-BD), Expansion Interface (EXP-INTF), Packet Interface (“Replacing SPE Circuit Packs” in this chapter).

When the procedure asks whether the packet bus problem has been resolved, the following conditions should all be met:

- All faulty leads reported by the TN771 standalone mode should no longer be reported.
- All alarms against the packet bus and packet circuit packs have been resolved.
- All ISDN-BRI stations and data modules, and all relevant ASAI, System Port, and Packet Gateway supported adjuncts are in service.

Procedure 1

Procedure 1 determines whether any circuit packs that use the packet bus have faults. For each circuit pack type in Table 5-3, proceed through the steps below. Check the circuit pack in the order presented by the flowchart which appears earlier in this discussion unless newly inserted circuit packs are involved. Newly added boards are the most likely cause of a problem.

1. **Display errors** and **display alarms** for the circuit pack.
2. For any errors or alarms, follow the repair actions recommended in Chapter 9, "Maintenance Object Repair Procedures".
3. After following the recommended repair actions, *whether they succeed or fail*, determine if the packet bus fault is resolved. If so, you are finished.
4. If the packet bus fault is still present, apply this procedure to the next circuit pack.

5. If there are no more circuit packs in the list, go to Procedure 2.

Table 5-3. Packet Circuit Packs

Circuit Pack Name	Circuit Pack Code	Associated Maintenance Objects
ISDN-BRI	TN556	BRI-BD, BRI-PORT, ABRI-PORT, BRI-SET, BRI-DAT, ASAI-ADJ
Maintenance/Test	TN771	M/T-BD, M/T-PKT
Packet Gateway	TN577	PGATE-BD, PGATE-PT
Packet Data	TN553	PDATA-BD, PDATA-PT
Universal DS1	TN464	UDS1-BD, ISDN-LNK
Packet Interface	TN1655	PKT-INTF
Expansion Interface	TN570	EXP-INTF

Procedure 2

Procedure 2 removes and reinserts *port* circuit packs (purple slots), and the Expansion Interface one or several at a time. Use Procedure 2 for each port circuit pack in the port network until the problem is resolved *or* all port circuit packs have been tried.

NOTE:
The Expansion Interface circuit pack should be the last one checked since removing it disconnects the EPN. To check an active Expansion Interface in a system with duplicated PNC, use **reset pnc interchange** to make it the standby. (Always check the status of the standby before executing an interchange.)

NOTE:
The Tone/Clock circuit pack should be the next-to-last one checked. (The TN771 must be reseated after the Tone/Clock is reinstalled.) Refer to Procedure 3 for the TN768 or TN780 Tone/Clock circuit pack in a PPN with duplicated SPEs.

If the packet bus problem is present when the circuit pack is inserted, but is resolved when the circuit pack is removed, either the circuit pack or the backplane pins in that slot caused the problem. If the backplane pins are intact, replace the circuit pack. Keep in mind that there may be more than one failure cause.

In Procedure 2, you may try one circuit pack at a time, or multiple circuit packs simultaneously. The allowable level of service disruption should guide this

choice. If the entire port network can be disrupted, trying large groups of circuit packs will save time. If traffic is heavy, trying one circuit pack at a time is slow but will minimize outages.

If the TN771 Standalone mode does *not* indicate packet bus faults, perform Procedure 2 for *only* the *port* circuit packs (purple slots) listed in Table 5-3 under Procedure 1. In this case, you need not check for problems with the backplane pins. It is sufficient to determine whether the problem is resolved by removing circuit packs.

If you decide to remove multiple circuit packs, consider working with an entire carrier at a time to more quickly and reliably determine which circuit packs are *not* the source of trouble. Any circuit packs, (packet or non-packet), that have been recently inserted should be checked first. Packet circuit packs should be checked before non-packet circuit packs.

1. Remove one or several circuit packs.
2. Determine if the packet bus fault is still present. If not, go to step 4.
3. If the packet bus fault is still present:
    a. Determine if the backplane pins in the removed circuit pack's slot are bent using the output from the Maintenance/Test standalone mode and the backplane illustrations which appear earlier in this discussion.
    b. If the backplane pins are bent:

       Power down the carrier (see "Replacing SPE Circuit Packs" in this chapter), straighten or replace the pins, reinsert the circuit pack, and restore power. Repeat Step 2 for the same circuit pack.
    c. If the backplane pins are not bent:

       Reinsert the circuit pack(s), and repeat this procedure for the next set of circuit packs.
4. If the packet bus fault is not present:
    a. Reinsert circuit packs one at a time and repeat the following substeps until all circuit packs have been reinserted.
    b. Determine if the packet bus fault has returned.
    c. If the packet bus fault has returned, the reinserted circuit pack is defective. Replace the circuit pack and then continue.
    d. If the packet bus fault does not return when all of the circuit packs have been reinserted, you are finished.

Continue with Procedure 3 if all the port circuit packs have been checked, but the packet bus fault is still not resolved.

Procedure 3

Procedure 3 removes and reinserts SPE and EPN control circuit packs one at a time. In the PPN, the following SPE circuit packs either use the packet bus or are connected to it in the backplane wiring:

- TN1655 Packet Interface
- TN768/TN780 Tone/Clock
- UN332 MSSNET

In the EPN, the following control circuit packs either use the packet bus for communication or are connected to it in the backplane wiring:

- TN775 EPN Maintenance Board
- TN768/TN780 Tone/Clock

These are the only SPE and EPN control circuit packs that are likely to cause a packet bus problem in a stable system. Perform this procedure on only these circuit packs.

If the TN771 Standalone mode does *not* indicate packet bus faults, perform Procedure 3 for *only* the Packet Interface and Tone/Clock circuit packs and do not check for problems with the backplane pins. Determining if the problem is resolved by removing circuit packs is sufficient.

For a system with simplex SPE:

1. Power down the control carrier. Refer to “Replacing SPE Circuit Packs” in this chapter.
2. Remove the suspect circuit pack.
3. Determine if the backplane pins in the removed circuit pack’s slot are bent.
4. If the backplane pins are bent:

   a. Straighten or replace the pins.

   b. Insert the same circuit pack.
5. If the backplane pins are not bent:

   a. Replace the circuit pack (reinsert the old one if a replacement is not available).
6. Turn the power back and allow the system to reboot. This may take up to 12 minutes. Log in at the terminal.
7. Determine if the packet bus fault is still present. If not, you are finished.

If the problem is still present,

a. If the old circuit pack was reinserted in Step 5, replace the circuit pack, and repeat Procedure 3.

b. If the circuit pack was replaced in Step 5, repeat Procedure 3 for the next SPE circuit pack.

If Procedure 3 fails to identify the cause of the problem, go to Procedure 4.

For a system with duplicated SPEs:

1. For SPE circuit packs, follow the "lock-and-power-down" procedure in Replacing SPE Circuit Packs in this chapter to remove and replace the circuit pack.
2. To remove an EPN Tone/Clock circuit pack, use **set tone-clock** if necessary to make the suspect circuit pack the standby. (Always check the status of the standby Tone/Clock with **status port network** before executing an interchange.)
3. Determine if the backplane pins in the removed circuit pack's slot are bent.
4. If the pins are bent:
   a. Power down the carrier if it is not already.
   b. Straighten or replace the pins.
   c. Insert the same circuit pack.
   d. Restore power to the carrier.
5. If the backplane pins are not bent:

   Insert or replace the circuit pack.
6. Determine if the packet bus fault is still present. If not you are finished.
7. If the packet bus fault is still present, do the following:
   a. If the old circuit pack was reinserted in Step 5, replace the circuit pack and repeat Procedure 3 starting at Step 2.
   b. If the circuit pack was replaced with a new one, proceed with the next step.
8. Repeat this procedure for the other SPE or Tone/Clock. If both have already been checked, go to the next step.

If all SPE and/or EPN control circuit packs have been checked and the problem is not resolved, continue with Procedure 4.

Procedure 4

Procedure 4 is used when the preceding procedures fail or when open leads are present. It is helpful in identifying multiple circuit pack faults and carrier hardware faults. It attempts to isolate the failure to a particular set of carriers and checks only the circuit packs in those carriers.

In Procedure 4, the TDM/LAN Cable Assemblies and TDM/LAN termination resistor packs are replaced. If this action does not resolve the packet bus fault,

the carriers are reconfigured by moving the termination resistor packs on the carrier backplanes in such a manner that certain carriers are disconnected from the bus. To terminate the packet bus at the end of a particular carrier, unplug the cable that connects the carrier to the next carrier and replace the cable with a TDM/LAN terminator resistor pack (see Figure 5-20 below). When the length of the packet bus is modified with this procedure, circuit packs that are essential to system operation (and the TN771 Maintenance/Test in standalone mode) must still be connected to the new 'shortened' packet and TDM busses.

DANGER:
Power must be removed from the entire port network before any cables or terminators are removed. Failure to do so can cause damage to circuit packs and power supplies, and can be hazardous to the technician.

DANGER:
Circuit packs in carriers that are not part of the shortened bus are not inserted. As a result, these circuit packs are not alarmed Ignore alarm status for these circuit packs for now All alarms should be resolved when the cabinet is restored to its original configuration.

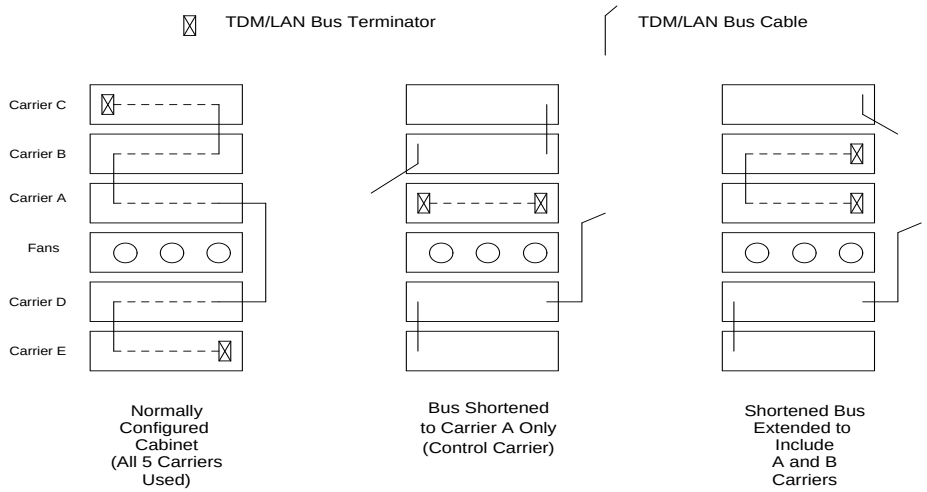

Figure 5-20. Carrier Rewiring Example—Rear View of Multicarrier Cabinet

Procedure 4 consists of two parts. Part 1 attempts to clear the packet bus fault by replacing all the bus cabling and terminators within a port-network. Part 2 attempts to isolate the fault to a particular carrier by extending the packet bus from the control carrier to additional carriers one at a time.

Part 1:

1. Power down the port network.
2. Replace all of the TDM/LAN Cable Assemblies and both TDM/LAN Terminators.
3. Restore power to the port network.
4. Determine if the packet bus fault is still present.
5. If the packet bus fault is resolved, the procedure is completed. Otherwise, go to Part 2.

Processor Port Network:

1. Power down the cabinet and terminate the packet bus so that it extends only from the carrier that contains the active SPE (A or B) to the carrier that contains the Maintenance/Test circuit pack.
2. Power up the cabinet, allow the system to reboot, and determine if the packet bus fault is still present. If not, proceed to the next step.

   If there are shorts on the packet bus, perform Procedures 2 and/or 3 for the circuit packs in the active SPE and carriers connected to it on the shortened bus. (Procedure 2 is performed for port circuit packs, and Procedure 3 is performed for SPE circuit packs.)
3. If the packet bus fault is not present, extend the packet bus to another carrier, and repeat the procedure in the previous step. When the addition of a carrier causes the fault to recur, and if there are shorts, perform Procedure 2 and/or Procedure 3 for only the circuit packs in that carrier.
4. If the packet bus fault recurs when the packet bus is extended, and if there are no shorts, or Procedures 2 and 3 do not resolve the problem, the added carrier(s) that caused the problem to recur are defective and must be replaced.
5. If the packet bus problems are still not resolved, follow normal escalation procedures.

Expansion Port Networks:

1. Place the Maintenance/Test circuit pack into a carrier that contains the active Expansion Interface circuit pack to permit isolation of the failure to the smallest possible number of carriers.
2. Power down the cabinet and terminate the packet bus on the carrier with the M/T and active EI.
3. Determine if the packet bus fault is still present If so, and if there are shorts on the packet bus, perform Procedure 2 and/or Procedure 3 for only the circuit packs in carriers connected to the ‘‘shortened’’ packet bus.

4. If the packet bus fault is not present, extend the packet bus to another carrier, and repeat the procedure in the previous step. When a carrier that causes the fault to recur is added, and if there are shorts, perform Procedure 2 and/or Procedure 3 for only the circuit packs in that carrier.
5. If the packet bus fault recurs as the packet bus is extended, and if there are no shorts, or Procedures 2 and 3) do not resolve the problem, the added carrier(s) that caused the problem to recur are defective and must be replaced.
6. If the packet bus problems are still not resolved, follow normal escalation procedures.

Additional Maintenance Procedures

6

Software Updates

A software update is the complete replacement of the software load running on a switch with a new version of software. Updates are used to provide new features and improved services, and to repair bugs discovered in the field. Note that the process is called a software update; the command used is **upgrade software**. A description of this command appears in Chapter 8, "Maintenance Commands".

Software *field updates* are partial replacements of a software load normally used for emergency bug fixes. Usually, a field update is transmitted electronically to the system from a remote site, but a technician must be on site to apply the update to backup tapes and insure that the system returns to normal operation. This procedure should be guided by the remote facility applying the update.

Software Version Number

Each software load is identified by a version number. The following are typical software version numbers displayed when **list configuration software-version** is entered:

```
SOFTWARE VERSION: DG3r01.06.1.00.0

SOFTWARE VERSION: G3V2m.01.2.0.078
```

This identifier is also called the release number or the vintage number. Version numbers are interpreted as follows:

G3V1 loads:

DG3r	01	06	1	00	0
Product ID	Feature Version	Major Release	Minor Release	Load Number	Unscheduled Release

G3V2 loads:

G3V2	m	01	2	0	080
Product ID	Boot Image	Major Release	Minor Release	Unscheduled Release	Load Number

The boot image field contains ‘‘m’’ (mips) for G3r V2 machines and ‘‘g’’ (gaz) for G3iV2 machines.

The system expects any software upgrade to be going from a lower, or older version number to a higher, or newer version number. To install an older version (for example, when backing out a failed upgrade), follow normal escalation procedures to avoid putting the system into a corrupted state.

Each software version also has a compatibility index of the form:

8	.	1
Major Field		Minor Field

Differences between old and new version numbers and compatibility indexes can be used to determine what service effects can be expected from the update. See the following section, “Service Effects of a Software Update.”

Service Effects of a Software Update

Simplex SPE

The **upgrade software** command executes a system reboot similar to a **reset system 4**. Emergency transfer is invoked and all calls drop. The G3-MT login is terminated and error logs are cleared. The service outage lasts for a period of up to 15 minutes. Results of each step in the upgrade process and initialization diagnostics are displayed on the terminal screen. Screen output is described in *Maintenance Commands*, **upgrade software**. Failure of initialization will produce an SPE-down mode, described in *Initialization and Recovery*. Translations are reloaded from the primary storage device and reformatted for the new software if necessary.

Duplicated SPE

On a system with a duplicated SPE, a software update may be either *call-preserving* or *call-dropping*. The compatibility of the old and new versions determines which type of update is performed. If the major fields of the compatibility indexes of the two versions are equal, then a call-preserving update is possible. The documentation accompanying the update tapes (Engineering Design Information, or EDI, and the Release Letter) should confirm this. With rare exceptions, this is the case when the Feature Version and Product ID numbers match.

If these conditions are not met, The **upgrade software call-override** option must be used, and the update will result in a system reset level 2 (cold-2 restart). An additional option, **preserve-calls**, can be added to force the system to attempt to preserve calls, but this must be used with care. If the incompatibility is great enough, this option may cause the system to escalate to a reboot (**reset system 4**). It is recommended that you escalate any such software update.

Call-Preserving Update

During a call-preserving update, calls in which two or more parties are connected and talking are preserved. The following types of calls are dropped: wideband calls, held calls, dialing calls, and calls that are connected to announcements, speech synthesizers, or tones. Administered connections are dropped and automatically restored. Feature activation attempts are ignored. No new calls are processed for a brief period. This period usually lasts less than 5 seconds but can last up to 1 minute depending on traffic load during the SPE interchange. Conference calls that attempt a new connection are either ignored or dropped.

Call-Dropping Update

During a call-dropping update, the effect will be similar to a cold-2 restart (**reset system 2**). All calls and system links drop, and the G3-MT login is terminated. The service outage lasts up to 4 minutes.

Preparing for a Software Update

1. Notify users of anticipated service effects described in the preceding section and arrange to do the update at a suitable time. Also advise appropriate users of the following feature interactions:
   - Administered connections are temporarily dropped.
   - Leave Word Calling messages stored in the SPE are lost. Those stored in a Message Server Adjunct or AUDIX system are saved.
   - Some feature settings will be lost and must be restored afterward. The effect is the same as a cold-2 restart. Features affected include night service, trunk/hunt group control, and manual/clock-manual override status on time of day routing. For example, hunt groups and attendant are put into night service after the update.

- ACD queues will be lost. There is no mechanism to drain the queues. CMS or BCMS can be used to monitor the queue lengths. If it is important to empty all queues before the update, you must coordinate with the customer to redirect traffic away from ACD splits before the update. Changing vectors to temporarily route calls to a disconnect announcement is one way to accomplish this. ACD agents will need to log in again after the update and their status lamps may be incorrect for about an hour (until periodic background maintenance completes one cycle).
- CMS links are dropped and restored, resulting in a loss of incoming data during the upgrade. Data loss can be minimized by performing the update soon after the end of a CMS measurement interval.
- Wideband calls are dropped.

2. Some information which is stored in system memory will be lost and must be manually recorded and then re-entered after the update:
   - Record all busied out maintenance objects. Enter **display errors print**, and select error type 18 on the menu. All busyouts will be lost during the update and must be reentered afterward. Disabled maintenance objects will likewise be re-enabled by the update.
   - All measurement data stored in memory, including BCMS, is lost. Print any desired reports before the update.
   - Enter **list report-scheduler**. Reports that are currently printing or queued will be lost. Wait until reports are finished printing or notify the customer. Reports are printing if the Link State field displays up on the **status sp-link** screen.
   - Enter **list wakeup print** and **list do-not-disturb stations print**. These feature settings will be lost and must be re-entered afterwards.
3. Make sure that the system's health and activity can support a successful update:
   - Enter **status spe** and verify that the state of health of the SPE is *functional*. This must hold true for active and standby SPEs when duplicated.
   - Enter **display alarms** and **display errors**. Resolve any active alarms or errors against SPE components or the PPN Tone-Clock.
   - Enter **status logins** and make sure that no other logins except yours are active.
   - Enter **status health** and look at the amount of load on the system. If call processing is greater than 50 percent, an update is not recommended due to increased customer impact.
   - Disable TTI changes via **change system-parameters features**.

- Enter **change system-parameters maintenance** and make sure that scheduled daily maintenance will not be running during the update. The Start Time field should be set to a time well after the session will end. If scheduled daily maintenance is running and needs to be shut off, set the Stop Time field to one minute after the current time. Be sure to restore the original settings when finished.

Restoring the System after an Update

During software updates, including call-preserving updates, several feature settings are lost. These must be manually restored afterward.

- Re-enter all Maintenance Object busyouts.
- Re-enter wakeup calls and do-not-disturb stations.
- Restore attendant feature settings.
- Notify Administration and ACD users that the update is complete.
- Re-enable TTI changes via **change system-parameters features**.
- On the **change system-parameters maintenance** form, restore Alarm Origination, Save Translations, CPE Alarm Level and SPE Interchange fields and Scheduled Daily Maintenance times to their original settings.
- Manually reset any speakerphones which derive power from the switch by pressing the button on the voice terminal.

Backing Out of a Software Update

If fatal hardware errors or memory faults prevent the update from completing, the system must be recovered and the update backed out. If the update command has already been entered, follow normal escalation procedures. Backing out after this point is hazardous and may leave the system in a corrupted state.

Software Update Procedure — Simplex SPE

After making the preparations described above, execute the following sequence of steps, entering the commands shown in bold type. This part of the procedure normally takes about 3 1/2 hours. Screen output for each command is described in Chapter 8, "Maintenance Commands". If errors are encountered after entering the *update software* command, follow normal escalation procedures. Avoid touching the keyboard while the save or upgrade commands are running since doing so may cause diagnostic messages to be lost.

Table 6-1. Software Update—Simplex SPE

Step	Time (min)	Remarks
change sys-par maint	2	Note the current settings of the Save Translation and Alarm Origination Activated fields and then set them to **n**. Set CPE Alarm Activation Level to none. Make sure scheduled daily maintenance is not set to run during the update.
save announcements	40	These steps create a backup tape in case the update fails and a backout is necessary. Saving announcements may be skipped if **display announcements** shows no administered announcements.
save translation	2	
backup disk	10	
Remove the backup tape and clean the tape drive	5	This procedure is described under TAPE in Chapter 9, "Maintenance Object Repair Procedures".
Insert the tape with	2	Wait for the tape to retension itself.
the new software		
list config software-version	5	Make sure the tape has the expected version number.
restore disk install	10	This copies files from the new tape to disk. If you are updating *from* a load earlier than 6.0, substitute for this step the following sequence: **copy announce tape save translation tape restore disk full**

The following step will result in the service effects described above.

Continued on next page

Table 6-1. Software Update—Simplex SPE — *Continued*

Step	Time (min)	Remarks
upgrade software to-version	10	Use the new software version number described above. The system will reboot and then reload translations. Results of each step in the the upgrade process and initialization diagnostics will be displayed on the terminal. A full description of screen output appears under "Upgrade Software" on page 8-309 of Chapter 8, "Maintenance Commands". **NOTE:** Be careful not to touch the G3-MT keyboard while waiting for the command to execute, or the result messages may be lost.
Log in on the G3-MT.		
change sys-par maint	2	Set the Save Translation, Alarm Origination Activated, CPE Alarm Level, and Daily Scheduled Maintenance times to the values that were in effect before starting this procedure.
save translation	2	This step stores the upgraded translations on disk.
backup disk	20	This step makes a backup copy of the new files. If a coredump from before the upgrade is on disk, this can take up to 50 minutes.
test stored-data	10	This step verifies that all MSS files are consistent. The next run of scheduled maintenance will also do this.
list config soft long	5	Verify that all files are correct.
backup disk	20	Make extra backup copies of the new files as needed. The next run of scheduled maintenance will also do this.
set vector 8	1	Sets the coredump vector to take a coredump when the system reboots.
Restore the system as described above.		

Software Update Procedure — Duplicated SPE

After making the preparations described above, execute the following sequence of steps, entering the commands shown in bold type. This part of the procedure normally takes about 3 1/2 hours. Screen output for each command is described in Chapter 8, "Maintenance Commands". If errors are encountered after entering the *update software* command, follow normal escalation procedures. Avoid touching the keyboard while the save or upgrade commands are running since doing so may cause diagnostic messages to be lost.

Table 6-2. Software Update—Duplicated SPE

Step	Time (min)	Remarks
change sys-par maint	2	Note the current settings of the Save Translation, SPE Interchange, and Alarm Origination Activated fields and then set them to **n**. Set CPE Alarm Activation Level to none. Make sure scheduled daily maintenance is not set to run during the update.
save announcements	40	These steps create a backup tape in case the update fails and a backout is necessary. Saving announcements may be skipped if **display announcements** shows no administered announcements.
save translation	2	
backup disk	10	
Remove tapes and clean tape drives	5	This procedure is described under TAPE in Chapter 9, "Maintenance Object Repair Procedures".
Insert the tapes containing	2	Wait for the tape to retension itself.
the new software		
list config software-version long	5	Make sure the tapes have the expected version number.
restore disk install both	10	Copies new tape files to disk. If updating *from* a load earlier than 6.0, substitute for this step the following sequence: **copy announce tape save translation tape restore disk full both**

Continued on next page

Table 6-2. Software Update—Duplicated SPE — *Continued*

Step	Time (min)	Remarks
The following step will result in the service effects described above. **upgrade software** to-version	10	Use the new software version number described above. The system will reboot the standby SPE, reload translations, and then execute an SPE interchange. Results of each step in the the upgrade process and initialization diagnostics will be displayed on the terminal. **NOTE:** Be careful not to touch the G3-MT keyboard while waiting for the command to execute, or the result messages may be lost.
Log in on the G3-MT.		
status spe	5	Repeat this command until the states of health of both SPEs are *functional*.
reset spe-standby 4	5	This step initiates a reboot of the the standby SPE with the new software load.
status spe	15	Repeat this command until the states of health of both SPEs are *functional*.
change sys-par maint	2	Set the Save Translation, Alarm Origination Activated, CPE Alarm Level, SPE Interchange fields and Daily Scheduled Maintenance times to the values that were in effect before starting this procedure.
save translation both	2	This step stores the upgraded translations on both disks.
backup disk	20	This step makes a backup copy of the new files. The next run of scheduled maintenance will also do this. If a coredump from before the upgrade is on disk, this can take up to 50 minutes.
test stored-data	10	This step verifies that all MSS files are consistent. The next run of scheduled maintenance will also do this.
list config soft long	5	Verify that all files are correct.

Continued on next page

Table 6-2. Software Update—Duplicated SPE — *Continued*

Step	Time (min)	Remarks
backup disk	20	Make extra backup copies of the new files as needed.
set vector f spe-maint	1	Sets the coredump vector to take a coredump when the system reboots.
Restore the system as described above.		

Facility Test Calls

The Facility Test Calls feature allows you to use a voice terminal to make test calls to specific trunks, time slots, tones, and tone receivers within the system. The test call verifies that the accessed component is functioning properly. To use this feature, it must be enabled on the Class of Restriction form, and you must know the Facility Test Call Access Code. The code can be retrieved by entering **display feature-access-codes**. It appears on page one of the screen output.

Trunk Test Call

The trunk test call accesses specific Tie or CO trunks, including DS1 trunks. If the trunk is busied out by maintenance, it will be temporarily released for the test call and returned to busyout afterwards. Before making the test call, use **list configuration** to determine the location of the trunk ports that you which to test. DID trunks cannot be accessed.

To place a trunk test call:

1. Dial the FAC described above and listen for dial tone.
2. Dial the 7-digit port location UUCSSpp:

   C = Carrier number (A=1, B=2, C=3, D=4, E=5)

   SS = Slot number (00-20)

   pp = Port circuit number

   The channels on a DS1 trunk are addressed by using the channel number (01-23) for the port number.

3. Listen for one of the following tones:

Dial tone or Silence	The trunk is connected. Go to step 4.
Busy Tone	The trunk is either busy processing a call or is out of service. Check **status trunk**.
Reorder tone	The trunk requested is in a different port network from your station, and inter-PN resources are not available to access it.
Intercept Tone	The port addressed is not a trunk, or it is a DID trunk, or the trunk is not administered.
Confirmation Tone	The port is a tone receiver. See the following section, "DTMR Test Call" on page 6-12.

4. Place a call. If the call does not go through (no ringing is heard) check to see if the circuit has been removed or if the trunk is a rotary trunk.

   The dial tone heard is coming from the far-end. If the far end has been disabled, you will not hear dial tone. However, depending on far-end administration, you may still be able to dial digits. All digits dialed after the port number are transmitted using end-to-end DTMF signaling. If the trunk being tested is a rotary trunk, it is not possible to break dial tone.

DSO Loop-Around Test Call

The DS0 Loop Around feature provides a loop around connection for incoming Non-ISDN DS1 trunk data calls. This feature is similar to the far end loop around connection provided for the ISDN Test Call feature. This DS0 loop around is provided primarily to allow a network service provider to perform facility testing at the DS0 level before video teleconferencing terminals are installed at the PBX.

The feature is activated on a call-by-call basis by dialing a test call extension specified on the second page of the System Parameters Maintenance form. No special hardware is required. When the test call extension is received by the PBX, a non inverting 64 kbps connection is set up on the PBX's Time Division Multiplexed bus. More than one loop around call can be active at the same time.

For calls routed over the public network using the ACCUNET Switched Digital Service (SDS) or Software Defined Data Network (SDDN), the data transmission rate is 56 Kbps since robbed bit signaling is used. For calls established over a private network using common channel signaling, the full 64 kbps data rate is available.

When the incoming trunk group is used only for data calls (SDS), the Communications Type on the associated Trunk Group form should be set to "data". When the incoming trunk group is used for robbed bit alternate voice and/or data (SDN/SDDN), the Communications Type on the Trunk Group form should be set to "rbavd" (robbed bit alternate voice data). For private network trunks using common channel signaling, the Communications Type on the associated Trunk Group form can be set to "avd".

DTMR Test Call

This call accesses and tests the dual tone multifrequency receivers (DTMR-PTs) located on TN420 and TN748 Tone Detector circuit packs. These tone receivers are also known as touch tone receivers (TTRs). Before making the test call, use **list configuration** to determine the location of the TN420 or TN748 that you which to test.

To place a tone receiver test call:

1. Dial the FAC described in the introduction to this section and listen for dial tone.
2. Dial the seven-digit port location UUCSSpp of one of the four DTMR ports located on a Tone Detector circuit pack:

   C = Carrier number (A=1, B=2, C=3, D=4, E=5)

   SS = Slot number (00-20)

   pp = Port circuit number (DTMR ports are numbered 01, 02, 05, and 06.
3. Listen for one of the following tones:

Confirmation tone	The DTMR is connected. Go to step 4.
Intercept tone	The port entered is not a TTR, (if a trunk, see above), or the board is not inserted.
Reorder tone	The DTMR is in use, (call processing), the board is busied out, or inter-PN resources are unavailable for the call.
Dial tone	The port is a trunk. See the preceding section.

4. Dial the sequence **1234567890*#**.

   If the sequence is entered and received correctly, dial tone is returned and another test call call can be made. If the test fails, intercept tone is returned. A failure may indicate a faulty DTMR port or circuit pack, a faulty voice terminal, or an error in the entry of the sequence.
5. To test another DTMR, repeat steps 2 through 4.

TDM Bus Time Slot Test Call

The time slot test call connects the voice terminal to a specified time slot on the A or B TDM Bus of a specified port network. To connect to any out-of-service time slots, refer to the next section, "Out-of-Service Time Slot Test Call" on page 6-15.

To test a specific time slot on the TDM bus of a specific port network:

1. Dial the FAC described in the introduction to this section and listen for dial tone.

2. Dial the 2-digit port network number followed by # and the 3-digit time slot number listed in the following table.
3. Listen for one of the following tones:

Reorder tone	The time slot is in use, the time slot is not addressable, or inter-PN resources are not available to make the call.
Confirmation tone	The time slot is idle or out-of-service. The time slot may be on the TDM bus (A or B) that is not currently carrying tones, or it may be busied out. The call is connected to the time slot so that any noise may be heard.
System tone	The time slot is carrying a system tone as listed in Table 6-3.

TDM Bus Time Slots

When you address a tone-carrying time slot on the TDM bus (A or B) that is currently carrying tones, you will be connected to that time slot and will hear the tone.

Time slots 005-021 and 261-277 are reserved to carry the system's dedicated tones. Time slots 000-004 and 256-260 carry control information and are not addressable. Time slots 254 and 510 are not addressable due to a hardware constraint. At any given time, only one of the TDM busses (A or B) carries the dedicated tones, with B being the default. Entering **status port-network** will display which TDM bus is currently carrying the dedicated tones. The corresponding time slots on the other bus are normally inactive and are used for call service only as a last resort when all other non-control channel time slots on both busses are busy. Bus A's tone time slots are numbered 005-021; bus B's tone time slots are numbered 261-277.

Table 6-3. TDM Bus Time Slot Numbers

TDM Bus A time slot	TDM Bus B time slot	Tone Heard
000	256	Reorder
001	257	Reorder
002	258	Reorder
003	259	Reorder
004	260	Reorder
005	261	Touch Tone 1 - 697Hz
006	262	Touch Tone 2 - 770 Hz
007	263	Touch Tone 3 - 852Hz
008	264	Touch Tone 4 - 941 Hz
009	265	Touch Tone 5 - 1209 Hz
010	266	Touch Tone 6 - 1336Hz
011	267	Touch Tone 7 - 1447 Hz
012	268	Touch Tone 8 - 1633 Hz
013	269	Dial Tone
014	270	Reorder Tone
015	271	Alert Tone
016	272	Busy Tone
017	273	Ringback Tone
018	274	Special Ringback Tone
019	275	2225 Hz Tone
020	276	Music
021	277	Tone on Hold
022-253	278-509	Confirmation (used for calls)
254	510	Reorder
255	511	Confirmation

Out-of-Service Time Slot Test Call

This call can be used to determine if there are any out-of-service time slots on the TDM bus of a specified port network. If there are, you will be connected to one. By listening to noise on the time slot and selectively removing circuit packs, you may be able to isolate the source of interference.

To place the call:

1. Dial the FAC described above and listen for dial tone.
2. Dial the port network number followed by **** and listen for one of the following tones:

Reorder tone	There are no out-of-service time slots on the specified port network.
Confirmation tone	Connection is made to an out-of-service time slot.

3. Repeated test calls will alternate between out-of-service time slots on TDM bus A and TDM bus B.

System Tone Test Call

This test connects the voice terminal to a specific system tone.

To Place the call:

1. Dial the FAC described above.
2. Dial the port network number followed by ** and the two-digit tone identification number from the following table.
3. Listen for one of the following tones:

Intercept tone	The number entered is not a valid tone number.
Reorder tone	Inter-PN resources are not available.
System tone	The specified tone will be heard if it is functioning.

Table 6-4. System Tone Identification Numbers

Number	Description
00	Null tone
01	Dial tone
02	Reorder tone
03	Alert tone
04	Busy tone
05	Recall dial tone
06	Confirmation tone
07	Internal call waiting tone
08	Ringback tone
09	Special ringback tone
10	Dedicated ringback tone
11	Dedicated special ringback tone
12	Touch tone 1
13	Touch tone 2
14	Touch tone 3
15	Touch tone 4
16	Touch tone 5
17	Touch tone 6
18	Touch tone 7
19	Touch tone 8
20	Chime
21	350 Hz
22	440 Hz
23	480 Hz
24	620 Hz
25	2025 Hz
26	2225 Hz
27	Counter

Continued on next page

Table 6-4. System Tone Identification Numbers — *Continued*

Number	Description
28	External call waiting
29	Priority call waiting
30	Busy verification
31	Executive override/intrusion tone
32	Incoming call identification
33	Dial zero
34	Attendant transfer
35	Test calls
36	Recall on don't answer
37	Audible ring
38	Camp-on recall
39	Camp-on confirmation
40	Hold recall
41	Hold confirmation
42	Zip tone
43	2804 Hz
44	1004 Hz (-16db)
45	1004 Hz (0 db)
46	404 Hz
47	Transmission test sequence 105
48	Redirect tone
49	Voice signaling tone
50	Digital milliwatt
51	440 Hz + 480 Hz
52	Music
53	Transmission test sequence 100
54	Transmission test sequence 102
55	Laboratory test tone 1

Continued on next page

Table 6-4. System Tone Identification Numbers — *Continued*

Number	Description
56	Laboratory test tone 2
57	Disable echo supervision dial tone
58	7 seconds of answer tone
59	4 seconds of answer tone
60	Restore music (or silence)
61	Warning tone
62	Forced music tone
63	Zip tone (first of 2 sent)
64	Incoming call ID (first of 2 sent)
65	Tone on hold
66	CO dial tone
67	Repetitive confirmation tone
68	Conference/bridging tone

Preventive Maintenance

The following preventive maintenance procedures should be followed when visiting customer sites. The AT&T Preventive Maintenance Log below is a sample; be sure to fill in the information on the log form before you leave the customer's premises.

Air Filters

Air filters should be inspected annually. If a filter is dirty or clogged, first tap it on the ground. If the filter is still dirty or clogged, then wash it with warm water and a mild detergent. A vacuum cleaner can be used if one is available. If there is no facility for washing or vacuuming the air filter, then replace the filter. Refer to CABINET Maintenance documentation for information on air filters and fans.

Tape Drive

The head and capstan on the tape drive of the SPE should be cleaned every three months. Abrasive particles from worn tape and environmental debris can cause loss of information and services. The procedure for cleaning the tape drive is described in the section on TAPE in Chapter 9, "Maintenance Object Repair Procedures".

Batteries

The backup batteries in the power distribution unit in the bottom of the cabinet should be replaced every four years or whenever a POWER alarm that indicts the condition of the batteries is logged. Systems with an uninterruptible power supply (UPS) may not be equipped with backup batteries.

AT&T PREVENTIVE MAINTENANCE LOG
DEFINITY®. GENERIC 3r

	SCHED. DATE	COMPL. DATE	COMPL. BY	SCHED. DATE	COMPL. DATE	COMPL. BY
AIR FILTERS*						
Inspect annually Clean or replace						
Single carrier cabinet: 403-302-159						
Multicarrier cabinet: 403-326-8204						
TAPE HEAD/CAPSTAN**						
Clean every three months						
BATTERY PACKS***						
Replace every 4 years						
Multicarrier cabinet: 403-302-912						
Single carrier cabinet: 403-289-422						

* See CABINET in Chapter 9, "Maintenance Object Repair Procedures", *DEFINITY Communications System Generic 3r Maintenance*

** See TAPE in Chapter 9, "Maintenance Object Repair Procedures", *DEFINITY Communications System Generic 3r Maintenance*

*** See POWER in Chapter 9, "Maintenance Object Repair Procedures", *DEFINITY Communications System Generic 3r Maintenance*

NOTE: This form is to be posted with the equipment. DATE SYSTEM INSTALLED _____

Analog Tie Trunk Back-to-Back Testing

The TN760 circuit pack can be configured for back-to-back testing (also known as connectivity testing) by making translation and cross-connect changes. This testing configuration allows for the connection of Tie Trunks back-to-back in the same switch to verify the operation of Tie Trunk ports. The tests can be performed in either the E&M or simplex modes. (Refer to *DEFINITY Communications System Generic 1 and Generic 3 Installation and Test,* 555-230-104, for instructions on how to make connections at the cross-connect field).

E&M Mode Test Procedure

1. At the administration terminal, enter **list configuration trunks** to determine which ports are assigned on the Tie Trunk circuit pack.
2. Enter **display dialplan** command to determine the Trunk Access Code (TAC) format.
3. Enter **display port** xxx for all ports defined in Step 1. This displays the trunk groups of which the ports are members. See Chapter 5, 'Responding to Alarms and Errors", for details of how to remove and replace port circuit packs.
4. Insert the circuit pack back into the slot.
5. Enter **display trunk** xxx **p** for each trunk group identified in Step 3. This command displays the specified trunk group on the administration terminal screen and prints a hard copy on the printer. Save this data for later use.
6. Remove all members defined by these ports from the trunk group(s) using the **change trunk** xxx command.
7. Remove the Tie Trunk circuit pack from the carrier slot.
8. Set the dip (option) switches for each of the two ports to be tested on the Tie Trunk circuit pack to ‘‘E&M mode’’ and ‘‘unprotected.’’
9. Enter **add trunk n** to add a new (test) trunk group. Then enter information for the following fields:

Group Type	tie
TAC	Use trunk access code obtained from dial plan
Trunk Type (in/out)	wink/wink

Port	Assign two of the ports from the tie trunk.
Mode	E&M for both ports
Type	Specify one port as **t1 standard** and other port as **t1 compatible**.

10. Locate the Tie Trunk port terminal connections at the cross-connect field. Consult the appropriate table below for either 110-type or 66-type hardware.
11. At the cross-connect field, disconnect outside trunk facilities from the Tie Trunk ports and mark the disconnected wires for reconnecting the Tie Trunk ports to their normal configuration later. The D Impact Tool (AT-8762) is required to perform this step.
12. Use jumper wires (DT 24M-Y/BL/R/G and DT 24P-W/BRN) and the D Impact Tool to connect wiring between the two ports assigned in Step 9 at the cross-connect field. For example, if the two ports on the Analog Tie Trunk circuit pack are port 1 and 2, connect the wirings as shown below:

Port 1 (t1 stan) (E&M)		Port 2 (t1 comp) (E&M)
T1	connected to	T12
R1	"	R12
T11	"	T2
R11	"	R2
E1	"	M2
M1	"	E2

13. Check all wirings to verify good connections between the two test ports.
14. Place a call from one voice terminal to another voice terminal using the Tie Trunk ports assigned. Dial TAC and extension. For example, if TAC of Tie Trunk group is 110 and station number is 5012, then dial 110 5012. If the call cannot be made, either one of these ports could be defective. There are four ports on the TN760. Try different combinations to determine defective ports.
15. If there is a defective port on the circuit pack, try to switch to an unused port. If all ports are normally used, then replace the circuit pack.
16. Disconnect the jumpers between two ports. Then use administration terminal and trunk printouts to restore all trunk group changes to normal values.

Table 6-5. Carrier Lead Appearances at 110-Type Cross-Connect Field

110 Connecting Block Terminals	CO Trunk TN747	Tie Trunk TN760
1	T1	T1
2	R1	R1
3		T11
4		R11
5		E1
6		M1
7	T2	T2
8	R2	R2
9		T12
10		R12
11		E2
12		M2
13	T3	T3
14	R3	R3
15		T13
16		R13
17		E3
18		M3
19	T4	T4
20	R4	R4
21		T14
22		R14
23		E4
24		M4
25	T5	
26	R5	

Continued on next page

Table 6-5. Carrier Lead Appearances at 110-Type Cross-Connect Field — *Continued*

110 Connecting Block Terminals	CO Trunk TN747	Tie Trunk TN760
27		
28		
29		
30		
31	T6	
32	R6	
32		
33		
34		
36		
37	T7	
38	R7	
39		
40		
41		
42		
43	T8	
44	R8	
45		
46		
47		
48		
49		
50		

Table 6-6. Carrier Lead Appearances at 66-Type Cross-Connect Field

110 Connecting Block Terminals	CO Trunk TN747	Tie Trunk TN760
1	T1	T1
2	R1	R1
3		T11
4		R11
5		E1
6		M1
7	T2	T2
8	R2	R2
9		T12
10		R12
11		E2
12		M2
13	T3	T3
14	R3	R3
15		T13
16		R13
17		E3
18		M3
19	T4	T4
20	R4	R4
21		T14
22		R14
23		E4
24		M4
25	T5	
26	R5	

Continued on next page

Table 6-6. Carrier Lead Appearances at 66-Type Cross-Connect Field — *Continued*

110 Connecting Block Terminals	CO Trunk TN747	Tie Trunk TN760
27		
28		
29		
30		
31	T6	
32	R6	
32		
33		
34		
36		
37	T7	
38	R7	
39		
40		
41		
42		
43	T8	
44	R8	
45		
46		
47		
48		
49		
50		

Simplex Mode Test Procedure

1. Repeat Steps 1 through 7 of the E&M Mode Test Procedure.
2. Set the dip (option) switches for each of the two ports to be tested on the Tie Trunk circuit pack to simplex mode.
3. Enter **add trunk n** to add a new (test) trunk group. Then enter information for the following fields:

Group Type	tie
TAC	Use trunk access code obtained from dial plan.
Trunk Type (in/out)	wink/wink
Port	Assign two of the ports from the tie trunk.
Mode	simplex
Type	type 5

4. Locate the Tie Trunk port terminal connections at the cross-connect field. Consult the appropriate table above for either 110-type or 66-type hardware.
5. At the cross-connect field, disconnect outside trunk facilities from the Analog Tie Trunk ports and mark the disconnected wires for later when the Tie Trunk ports are placed back into normal operation. The D Impact Tool (AT-8762) is required to perform this step.
6. Use jumper wires (DT 24M-Y/BL/R/G) and the D Impact Tool to connect wiring between the two ports assigned in Step 4 at the cross-connect field. For example, if the two ports on the Analog Tie Trunk circuit pack are ports 1 and 2, connect the wirings as shown below:

Port 1	connected to	Port 2
(type 5)		(type 5)
(simplex)		(simplex)

T1	connected to	T12
R1	"	R12
T11	"	T2
R11	"	R2

7. Repeat Steps 13 through 16 of the E&M Mode Test Procedure.

Terminating Trunk Transmission Testing

The Terminating Trunk Transmission (TTT) (non-interactive) feature provides for extension number access to three tone sequences that can be used for trunk transmission testing from the far end of the trunks.

The three test types should have extension numbers assigned on the Maintenance-Related System Parameters Form.

```
Test Type 100:___   Test Type 102:___   Test Type 105:___
```

Test Type 100 provides:

- 5.5 seconds of 1004 Hz tone at 0dB
- Quiet until disconnect; disconnect is forced after one minute

Test Type 102 provides:

- 9 seconds of 1004 Hz tone at 0dB
- 1 second of quiet
- This cycle is repeated until disconnect; disconnect is forced after 24 hours.

Test Type 105 provides:

- 9 seconds of 1004 Hz at -16dB
- 1 second of quiet
- 9 seconds of 404 Hz at -16dB
- 1 second of quiet
- 9 seconds of 2804 Hz at -16dB
- 30 seconds of quiet
- 1/2 second of Test Progress Tone (2225 Hz)
- Approximately five seconds of quiet
- Forced disconnect

Removing and Restoring Power

CAUTION:
Error Log information is lost when the PPN cabinet is powered down. If this information is to be saved, enter the ***reset system 4****command. The command will take several minutes to complete, and will result in saving of the Error Log to the MSS.*

CAUTION:
Before powering down a cabinet or carrier that contains DEFINITY AUDIX circuit packs (TN566 and TN2169), you must first power down the AUDIX unit to avoid damage to the AUDIX software Instructions for powering down this unit appear on the circuit pack and in DEFINITY AUDIX documentation.

CAUTION:
If there is an alarm or problem suspected on the Tape or Disk Circuit packs do not save translations or announcements to the affected device. If there is an alarm or problem suspected with the Host Adapter circuit, do not save data to either MSS device. Saving data under these circumstances can destroy good copies of the file. If necessary, obtain a spare tape cartridge to save data.

To remove power to the cabinet:

1. If the cabinet is the PPN, execute **save translations** and **save announcements** unless a tape drive problem is active.
2. Set the Emergency Transfer switch(es) in the affected cabinet to ON. In the PPN these are located on the SYSAM circuit pack(s). Set both in a system with duplicated SPE. In an EPN the switch is located on the EPN Maintenance circuit pack. This locks the system in the emergency transfer mode until the trouble is cleared.
3. Depending on which type of cabinet you are powering down, do one of the following:
   - In an AC-Powered multi-carrier cabinet, set the circuit breaker to OFF at the Power Distribution Unit.
   - In a DC-Powered multi-carrier cabinet, turn off the DC Power supply.
   - In an AC-Powered single-carrier cabinet stack, turn off the power in each affected carrier individually. The ON/OFF switch is located at the back of the carrier behind the WP-91153 Power Unit.
   - In a DC-Powered single-carrier cabinet stack, turn off the power in each affected carrier individually. The ON/OFF switch is located at the back of the carrier behind the 676B Power Unit.
4. Power is restored by reversing the action taken above.

   When restoring power to a PPN, the system will reboot. This process is described in Chapter 4, "Initialization and Recovery". When restoring power to an EPN, the EPN will under go a restart. This process is described under EXP-PN in Chapter 9, "Maintenance Object Repair Procedures".

   If a powered down carrier contains a 676B Power Unit, the 676B must have been powered down for at least 10 seconds for the unit to restart.

Automatic Transmission Measurement System (ATMS)

The ATMS performs transmission tests on analog trunks to determine whether they are performing satisfactorily. The switch automatically originates test calls from an Originating Test Line (OTL), over the trunks to be tested, to a Terminating Trunk Line (TTL) on the switch at the far end of the trunk. Several different measurements of noise and attenuation are made and compared to administered thresholds. Test measurements can be viewed in the form of detailed or summary reports which are described below.

ATMS test calls can be initiated on demand from the management terminal, or automatically by ATMS Trunk Test Schedules. For complete details on how to set up ATMS Trunk Test Schedules, see Chapter 4 of *Generic 3 V2 Implementation, 555-230-653*. Demand tests are run with the **test analog-testcall** command which is described below.

Trunk groups can be administered to respond in different ways when a trunk fails to perform within the administered thresholds. Alarms and errors may be logged, and the trunk can be automatically busied out. When a trunk fails an unacceptable threshold twice, the system will busy it out if the trunk group is so administered and doing so will not exceed an administered limit (25, 50, 75, or 100% of the members in the group). This limit is not applied to later busyouts caused by other factors. Trunks can be manually returned to service by changing the thresholds and running a demand test or by using the release command.

ATMS Requirements

ATMS tests utilize the analog port (port number 01) on a TN771 Maintenance/Test circuit pack. Each PPN contains one TN771. Depending on system configuration, each EPN may also contain one TN771. Multiple TN771s allow up to 3 concurrent test calls.

AMTS tests are designed to operate on the types of trunks found in the US, and the TN771 analog port is mu-law companding only. The tests will not be useful in all environments.

For ATMS tests to run, several administrative prerequisites must be met. The following list shows the field entries necessary to enable testing.

Table 6-7. ATMS Administration

Form	Field	Entry/Remarks
System-parameters customer options	ATMS?	**y** (You must logoff/login in order for changes on this form to take effect.)
Station	Extension	At least one TN711 analog port must be assigned.
	Port Number	**UUCSS01** where UUCSS is the location of any TN771
	Port Type COR	**105TL** The number of a COR that has testing enabled (see next form)
Class of Restriction	Facility Access Trunk Test	**y**
Trunk Group	Maintenance Tests? ATMS Thresholds (page 4 of form)	**y** This page is used to specify performance thresholds, the type and access number of the far-end TTL, and system response to test failures.
Hunt Group		(Optional, for incoming test calls) If the system has several TN771s, you can use this form to make up a hunt group of TTLs so that one extension can be used for the whole pool.
ATMS Trunk Test Schedule		(Optional) To set up a test schedule, see Chapter 4 of *Generic 3 V2 Implementation,* 555-230-653.

Running ATMS Tests (Test Analog-Testcall Command)

ATMS test calls can be originated either on demand or according to the ATMS Test Schedule. Test schedules are set up with **test-schedule** commands which are described in Chapter 4 of *Generic 3 V2 Implementation,* 555-230-653.

Demand test calls are originated via the **test analog-testcall** command. You can specify testing of an entire trunk group, an individual trunk, or all trunks on a single circuit pack. Trunks can be addressed by either group/member numbers or circuit pack/port locations. The type of test call, the number of the testing line on the far-end switch and various other parameters must be administered on the trunk group form before the command can execute.

Normally you should invoke only the full or supervision tests. The other options are provided mainly for use in setting up an ATMS schedule. Which tests are run depend on the type of TTL at the far end to which the test call is made. The following table shows which tests are run for each type of TTL. Command syntax is as follows:

test analog-testcal

trunkgroup#/| member#| port UUCSSpp | boardUUCSS
[full | supervision | no-selftest | no-return-loss | no-st-or-rl]
[repeat#][schedule]

Input Parameters

trunk addresses	You can specify a single trunk or several trunks by using **trunk**, **port**, or **board** addresses. These parameters are described in the introduction to Chapter 8, "Maintenance Commands". If you enter a trunk group number without a member number, all members of the group are tested.
full	This executes the most comprehensive test call available using the administered test set type. "Full" is the default.
supervision	This test takes about 10 seconds and simply confirms the presence of testing capability at the far end.
no-selftest	This executes the full test, but skips self test sequences. This saves about 20 seconds on the type 105 transmission test and has no effect on type 100 and 102 transmission tests.
no-return-loss	This executes the full test, but skips return loss sequences. This saves about 20 seconds on the type 105 transmission test and has no effect on type 100 or 102 transmission tests.
no-st-or-rl	This executes the full test, but skips the self test and the return loss sequences. This saves about 40 seconds on the type 105 transmission test and has no effect on type 100 or 102 transmission tests.
repeat #	This specifies repeating the tests up to 99 times. The default is a single run of the tests.
schedule	This qualifier brings up a form for scheduling execution of the test at a later time. This is not the same as setting up an ATMS Test Schedule, which is described above.

Different TTLs have different measurement capabilities and you will need the following information about specific TTL types. This table does not include the self-test nor does it distinguish between measurements for different test tone levels.

Table 6-8. Measurement Capability by TTL Type

	Terminating Test Line Type				
Test	**105 Type with Return Loss**	**105 Type without Return Loss**	**High-level/ Low-level Tone Source**	**100 Type**	**102 Type**
1004 Hz Loss Far-End to Near-End	x	x	x	x	x
1004 Hz Loss Near-End to Far-End	x	x			
404 Hz Loss Far-End to Near-End	x	x	x		
404 Hz Loss Near-End to Far-End	x	x			
2804 Hz Loss Far-End to Near-End	x	x	x		
2804 Hz Loss Near-End to Far-End	x	x			
C-Message Noise Near-End	x	x	x	x	
C-Message Noise Far-End	x	x			
C-Notched Noise Near-End	x	x			
C-Notched Noise Far-End	x	x			
Return Loss* Near-End	x	x	x	x	
Return Loss Far-End					

* Return Loss includes Singing Return Loss High Frequency, Singing Return Loss Low Frequency, and Echo Return Loss.

Test Call Results

If the test call successfully completes, and all trunks test within administered thresholds for marginal and unacceptable performance, then a PASS result is returned. If the test aborts or fails, an error code indicating the cause is returned.

The error codes are explained in the CO-TRK and TIE-TRK sections of Chapter 9, "Maintenance Object Repair Procedures". When the trunk is being used for call processing, the test aborts. When the trunk is already being tested by maintenance software, the test is queued and run when the maintenance activity finishes.

Measurement data gathered by analog testcalls can be retrieved with the **list testcalls** command which is described below. Which measurements are made and recorded depends on which type of test is specified and the capabilities of the far-end TTL.

The following screen shows a typical result for **test analog-testcall trunk 60**.

```
test analog-testcall trunk 60                                SPE B

                                  TEST RESULTS

 Port      Maintenance Name  Alt. Name  Test No. Result   Error Code

 02B1901   TIE-TRK           060/001     845      PASS
 02B1902   TIE-TRK           060/002     845      PASS
 02B1903   TIE-TRK           060/003     845      PASS
 02B1904   TIE-TRK           060/004     845      ABORT     1004
 02B1905   TIE-TRK           060/005     845      PASS
 02B1906   TIE-TRK           060/006     845      ABORT     1004
```

Output Fields

Port	The physical location of the port supporting the trunk being tested. The format is UUCSSpp where UU is the cabinet number, C is the carrier letter, SS is the circuit pack slot, and pp is the port circuit number.
Maintenance Name	The name of the maintenance object tested, TIE-TRK or CO-TRK.
Alt. Name	The trunk group number and member number of the trunk being tested.
Test Number	ATMS tests are numbered 844 through 848.
Result	If the test call successfully completes, and all trunks test within administered thresholds for marginal and unacceptable performance, then a PASS result is returned. If measurements fall outside the thresholds, the test fails. The trunks group can be administered to log errors and alarms, and to busy out the failed trunk. If the test call cannot be completed, an ABORT is returned.
Error Code	This numerical code indicates the reason for a failure or abort. The codes are explained in the CO-TRK and TIE-TRK sections of Chapter 9, "Maintenance Object Repair Procedures".

ATMS Reports (List Testcall Command)

The **list testcalls** command produces detailed and summary reports of measurements made by the Automatic Transmission Measurement System (ATMS). Measurement reports contain data on trunk signal loss, noise, singing return loss, and echo return loss, and are used to determine the quality of trunk lines. The system maintains a database with the results of the last test for each trunk. System resets clear all transmission test data, and ATMS measurements are not backed up by the Mass Storage System.

ATMS parameters are administered on page 4 of the trunk group form. These include thresholds for marginal and unacceptable performance. On the screen display, measurements that exceed the marginal threshold are highlighted. Measurements that are exceed the unacceptable level appear flashing, indicating unusable trunks. Trunk groups can be administered to log errors and alarms, and busyout the failed trunk in response to such results.

The detailed report lists measurements for each trunk group member. The summary reports lists trunk groups as a whole. Which measurements are displayed depends on what type of test, if any, was last run on the trunk, and the capabilities of the TTL on the switch at the far end of the trunk. See the preceding

description of the **test analog-testcall** command. A blank line indicates that no test data is available for that trunk or group.

The number of pages of each report is dependent upon the selection criteria and the number of outgoing trunks in the system. About 10 measurements can be listed on a page on the administration terminal, or about 50 measurements can be listed on a printer. By default, reports list all measurements. Filtering can be used to limit the output. For example, the report can be set up to print only failed measurements.

The syntax of the command is as follows:

list testcalls detail | summary

[port UUCSSpp]
[grp group#] [to-grpgroup#]
[mem member#] [to-memmember#]
[resultresultID> | not-resultresultID]
[count#] [print | schedule]

Input Parameters - List Testcall Command

detail	This qualifier specifies a detailed report that shows each measurement made for each trunk.
summary	This qualifier specifies a report that shows totaled results of ATMS tests for trunk groups as a whole.
grp #	This qualifier specifies a report showing measurements for a specific trunk group. When used with **to-grp**, this option specifies the starting trunk group in a range.
to-grp	This qualifier specifies a report showing measurements for all trunk groups from 1 up to the trunk group number entered. When used with **grp**, this is the ending trunk group in a range.
mem	Used with **grp**, this qualifier specifies a report showing measurements for a specific trunk group member. When used with **to-mem**, this is starting trunk group member in a range.
to-mem	Used with **grp**,this qualifier specifies display of measurements for all trunk group members from 1 up to the specified trunk group member entered. When used with **mem**, this is the ending trunk group member in a range.
port	This qualifier specifies display of measurements for the trunk assigned to a specific port circuit.
result	Only measurements that match the specified result are displayed. Result IDs include **pass**, **marg**, **fail**, and numerical abort codes.
not-result	Only measurement results that do not match the specified result are displayed.
count number	This qualifier limits the total number of records displayed.
print	With this qualifier, the command executes immediately (if resources are available) and sends output both to the screen and to a printer connected to the terminal where the command was entered.
schedule	With this qualifier, a scheduling form is displayed which allows you to specify a start time for the command. The command is placed in the queue and, when executed, sends the output to the system printer.

ATMS Summary Reports

The ATMS Summary Report summarizes, on a trunk group basis, the collective results of the latest ATMS tests performed on each trunk group. By interacting with the trunk group form, it highlights out-of-tolerance measurements. Marginal

trunks are highlighted, and unusable trunks blink, allowing you to quickly identify out-of-tolerance or unusable trunks. The following screen shows a typical summary report.

ATMS MEASUREMENT SUMMARY REPORT

trk Grp Num	Num of Trks	Last Test Date	Last Test Time	Trunks Passed Transm Test	Trunks Failed Marginal Threshld	Trunks Failed Unaccept Threshld	Trks In-Use	Trks Not Test	Busied Out Trunks
1	10	10/04/91	15:15	10	0	0	0	0	0
10	10	10/04/91	15:40	10	0	0	0	0	0
20	5	10/04/91	16:00	5	0	0	0	0	0
30	30			0	0	0	0	30	0
40	20	10/04/91	16:15	20	0	0	0	0	0
50	10	10/04/91	16:40	10	0	0	0	0	0
60	3	10/04/91	16:55	0	0	0	0	0	3
78	10	10/04/91	17:05	8	0	0	1	0	1
83	15	10.04/91	17:20	15	0	0	0	0	0
105	100	10/04/91	17:40	100	0	0	0	0	0
125	2	10/04/91	19:30	0	0	0	0	0	2
350	10	10/04/91	19:40	10	0	0	0	0	0
500	55	10/04/91	19:55	55	0	0	0	0	0
650	1	10/04/91	21:00	1	0	0	0	0	0

Output Fields - ATMS Summary Report

Trk Grp Num	Results for each trunk group are listed by trunk group number. Trunk group number Only outgoing or two-way analog trunks are listed.
Num Of Trks	The number of members in the trunk group.
Last Test Date	The date of the oldest measurement in the trunk group.
Last Test Time	The time of the oldest measurement in the trunk group.
Trunks Passed Transm Test	The number of trunks that have passed the trunk transmission tests.
Trunks Failed Marginal Threshld	The number of trunks that performed outside the marginal threshold, but not the unacceptable threshold, as defined on the trunk group form.
Trunks Failed Unaccept Threshld	The number of trunks that performed outside the unacceptable threshold, as defined on the trunk group form.
Trks In-Use	The number of trunks that were in use at the time of testing. Abort codes for trunk-in-use are 1000 and 1004.
Trks Not Test	The number of trunks that were not tested due to error conditions other than trunk-in-use. Abort codes are given in the detailed report.
Busied Out Trunks	The number of trunks that were busied out in response to test failures. These may be caused by hardware problems, incorrect threshold values, and so on.

ATMS Detail Report

This report is divided into two sections. The upper section lists the trunk group, trunk type, trunk vendor, TTL type, and the user-defined threshold values administered on page 4 of the trunk group form. The lower section lists the most recent set of measurements for each member of the trunk group selected for the report. Measurements that exceed the marginal threshold, but not the unacceptable threshold, are highlighted. Measurements that exceed the

unacceptable threshold blink, identifying unusable trunks. When a marginal or unacceptable measurement is located, scan the top section to find out how far the measurement deviates from its defined threshold.

```
                          ATMS TRUNK MEASUREMENTS
Group: 78  Type: co     Vendor: AT&T                 TTL Type: 105-w-rl

THRESHOLD VALUES
                                   Loss dev at
                      1004Hz-loss  404Hz 2804Hz  C-msg C-ntch    SRL  SRL
                        Min  Max    -  +  -  +   Noise Noise     LO   HI  ERL
            Marginal    -2   21     9  9  9  9     55    74       0    0   0
         Unacceptable   -2   21     9  9  9  9     55    74       0    0   0
Trk Test  Test  Test -16dBm OdBm
Mem Date  Time  Rslt FE NE  FE NE  FE NE FE NE  FE NE FE NE  FE NE FE NE FE NE
1   10/04 14:25 pass 7  7   7  7   -2 -2 7  7   15 28 34 34  8  16 11 16 11 17
2   10/04 14:26 1920
3   10/04 14:27 1000
4   10/04 14:28 pass 7  7   7  7   -2 -2 7  7   15 29 38 34  8  16 11 15 11 16
5   10/04 14:29 pass 7  7   7  7   -2 -2 6  6   15 35 34 34  8  6  9  6  10 7
6   10/04 14:30 pass 7  7   7  7   -2 -2 6  6   15 26 34 34  8  16 9  13 10 16
7   10/04 14:31 pass 7  7   7  7   -2 -2 7  7   15 30 34 34  8  16 9  11 10 13
8   10/04 14:32 pass 6  6   6  6   -2 -2 6  6   15 25 34 34  10 17 11 16 12 17
9   10/04 14:33 pass 6  6   7  7   -1 -1 7  7   15 25 34 34  8  15 9  13 10 16
10  10/04 14:34 pass 6  6   7  6   -1 -1 7  7   15 36 34 35  8  6  9  6  10 7
```

Output Fields - ATMS Detail Report

Measurements are made in both directions, near to far end, and far to near end. For each measurement, there are two columns on the lower part of the report, “NE” for near end, and “FE” for far end. These refer to the destination end for that measurement.

Group	The trunk group number selected.
Type	The trunk group type.
Vendor	The vendor of this trunk group.
TTL Type	The type of terminating test line on the switch at the far end of the trunk to which the test call was made.
Threshold Values	The list of marginal and unacceptable threshold values for each type of measurement. These are defined on the trunk group form.
Trk Mem	The trunk member number.
Test Date	The month and day this trunk was last tested.
Test Time	The time of day this trunk was last tested.

Tst Rslt	The results of the trunk transmission test as follows: pass The test call completed successfully and trunk performance was satisfactory marg Trunk measurements exceeded the marginal threshold, but not the unacceptable. fail Trunk measurements exceeded the unacceptable threshold. xxxx A numerical error code indicates the reason for an aborted test call. The codes are explained in the CO-TRK and TIE-TRK sections of Chapter 9, "Maintenance Object Repair Procedures". blank A blank line indicates that no measurements have been made on this trunk since the database was last initialized.
1004Hz-loss Min	Far-to-near and near-to-far measurements of 1004-Hz loss from low-level tone.
1004Hz-loss Max	Far-to-near and near-to-far measurements of 1004-Hz loss at 0 dBm.
Loss dev at 404Hz	These low-frequency transmission tests measure maximum positive and negative deviation of +9 and -9 dB from the 1004-Hz loss measurements.
Loss dev at 2804Hz	These high frequency transmission tests measure maximum positive and negative deviation of +9 and -9 dB from the 1004-Hz loss measurements.
C-msg Noise	Maximum noise interference noise) terminating on a voice terminal within the voice-band frequency range (500 to 2500 Hz). The measurement ranges from 15 to 55 dBrnC (decibels above reference noise).
C-ntch Noise	Maximum signal-dependent noise interference on a line between 34 and 74 dBrnC.

SRL-LO	Singing return loss from 0 to 40 dB between the sum of the circuit (repeater) gains and the sum of the circuit losses. SRL-LO occurs most often in the frequency range of 200 to 500 Hz.
SRL-HI	Singing return loss from 0 to 40 dB between the sum of the circuit (repeater) gains on a circuit and the sum of the circuit losses. SRL-HI occurs most often in the frequency range of 2500 to 3200 Hz.
ERL	Echo return loss from 0 to 40 dB between the level of signal strength transmitted and the level of signal strength reflected. ERL occurs most often in the frequency range of 500 to 2500 Hz

ATMS Measurement Analysis

ATMS compares the results of the test measurements with threshold values to identify trunks that are out of tolerance or unusable. Once a defective circuit has been pinpointed, a proper analysis must be made to determine the appropriate action to take on the facility failures. Although there is no ‘‘right’’ procedure for every situation, the following items will help in troubleshooting problems:

- If a circuit fails an ATMS transmission test, it does not necessarily mean the trouble is in the facility itself. The problem could be caused by a faulty test line, bad switch path, or a variety of other reasons.
- If a circuit fails a transmission test but successfully passes a supervision test, some of the items mentioned above are probably not at fault, since proper call routing and circuit continuity are required for successful of a supervision test.
- If several circuits in the same group are failing, this could indicate the failure of some common equipment (such as a carrier system, test line, or cable) or erroneous information in the threshold tables.
- When a test call can be successfully made, but not completed, either the OTL or TTL is probably defective For this failure type, further ATMS testing might be seriously impaired, but the system is not otherwise affected.
- If a test call cannot be successfully made, the wrong number might have been dialed, the far-end device might be busy, the far-end device is defective, or there is a serious trunk failure obstructing the call.

LED Indicators

7

If a maintenance object in the system begins to fail some of the periodic tests, the system automatically generates an alarm. This alarm indicates to maintenance personnel that action is required to restore the system to a normal condition. The system identifies three levels of alarms:

- Major Alarms — Failures that cause critical degradation of service and require immediate attention.
- Minor Alarms — Failures that cause some degradation of service, but do not render a crucial portion of the system inoperable. This condition requires action, but its consequences are not immediate. Problems might be impairing service to a few trunks or stations or interfering with one feature across the entire system.
- Warning Alarms — Failures that cause no significant degradation of service or failures in equipment external to the system. Warning alarms are not reported to the attendant console or INADS.

Alarms are communicated to the system users and technicians by entries in the Alarm Log and the lighting of LEDs located on the attendant console, on all circuit packs in the switch cabinets, and, optionally, on customer-designated voice terminals.

Terminal Alarm Notification

Terminal Alarm Notification is an optional feature which displays several types of alarms on voice terminals with administered feature buttons or the attendant console. A maximum of ten digital and/or hybrid voice terminals may be used.

When an alarm occurs, the green status LED associated with the assigned button will be in a steady state. The lamp may be turned off by pressing the

button associated with the lighted alarm lamp. If the lamp is turned off, and the alarm has not been resolved by the time maintenance reschedules testing, the green status LED will resume its steady state. The following alarms are displayed:

ac-alarm	Administered Connection Alarm: a locally administered connection (ADM-CONN) has a Major, Minor, or Warning alarm active.
pr-awu-alm	Auto Wakeup Journal Printer Alarm: the automatic wakeup journal printer has a Major, Minor, or Warning alarm active.
ds1-alarm	DS1 Facility Alarm: a DS1-BD has an off-board Major, Minor, or Warning alarm active.
trk-ac-alm	Facility Access Alarm: The facility access trunk test feature is activated.
major-alrm	Major Alarm: The system has logged a Major Alarm.
mj/mn-alrm	Major/Minor Alarm: The system has logged a Major or Minor Alarm.
pr-pms-alm	PMS Printer: The Property Management System printer has a Major, Minor, or Warning alarm active.
rs-alert	Reset-Alert: **reset system 2** or **3** has been performed.
cdr1-alrm	Call Detail Recording Alarm: The Primary CDR Link has a Major, Minor, or Warning alarm active.
cdr2-alrm	Call Detail Recording Alarm: The Secondary Link has a Major, Minor, or Warning alarm active.
pr-sys-alm	System Printer Alarm: The System Printer (SYS-PRNT) has a Major, Minor, or Warning alarm active.
pms-alarm	The Property Management System has a Major, Minor or Warning alarm active.

Attendant Console LEDs

The console has two red LEDs, labeled "ALM" and "ACK". The ALM LED lights steadily when there is a Major or Minor alarm at the switch cabinet. The ACK LED lights steadily if the alarm has been successfully reported to INADS. If the system is unable to report the alarm to INADS, the LED flashes; this signals the attendant to call INADS and report the alarm.

Circuit Pack LEDs

Each circuit pack has three LEDs on the front panel visible at the front of the carrier. On most circuit packs, the LEDs indicate the following when lit. Exceptions to these indications are explained in subsequent sections.

Red	Alarm	The system has detected a fault in this circuit pack. The Alarm Log should contain an on-board alarm for this circuit pack or one of the maintenance objects associated with it. The red LED is also lit briefly when a circuit pack is inserted or reset. If the circuit pack passes its initialization tests, the LED is extinguished. If a fault is detected, it remains lit.
Green	Testing	The system is currently running tests on this circuit pack as part of background maintenance or demand testing. This LED is also lit briefly during initialization tests when a circuit pack is inserted or reset.
Yellow	Busy	The circuit pack is currently in use by the system.

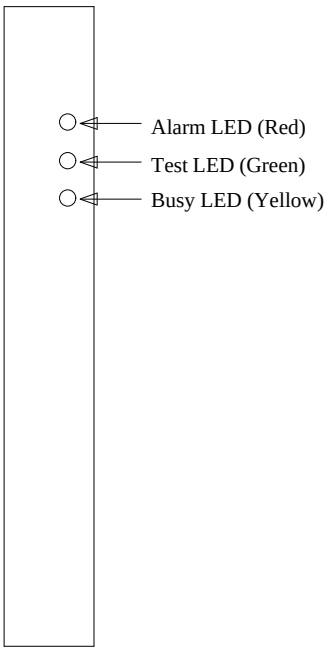

Figure 7-1. Circuit Pack LEDs

LED Alarms without Alarm Log Entry or with Error Type 1

Whenever the system or a part of the system is reset, all affected circuit packs will briefly light their red and green LEDs as they are initialized. Upon power-up of a newly installed system, several alarm indicators may remain lit until the circuit packs are administered. These alarms should be ignored until administration is completed.

During routine or demand testing of Mass Storage System components, the red, green and yellow LEDs on the MSSNET, TAPE, and DISK circuit packs all light temporarily. This is normal and does not indicate a problem.

After a circuit pack has been initialized, a lit red LED should be accompanied by an alarm in the alarm log. A single fault can sometimes light alarm LEDs on several circuit packs, as in the following examples.

- A TDM bus problem may cause several port circuit packs to display red LEDS.
- An EPN Maintenance circuit pack can prevent an Expansion Interface circuit pack from initializing.
- Extensive interactions in the Center Stage Switch can cause multiple alarms from single faults in DS1C, SNI and SNC circuit packs and fiber links.
- Tone/clock problems may cause other circuit packs to report alarms.
- Misconnected optical fiber cables may cause several circuit packs to alarm.
- Packet bus faults can cause several port circuit packs to display red LEDs.

Consult the documentation for the appropriate maintenance object in Chapter 9, "Maintenance Object Repair Procedures" to investigate and resolve faults identified by the alarms.

If a circuit pack has had at least five minutes to be initialized, and the red LED is lit without an associated alarm in the Alarm Log, the circuit pack may not be in communication with the system. This may also be the case when a circuit pack is properly administered and present in its slot, but there is an error type 1 logged against it. To determine if this is so, proceed as follows:

- Issue the **list configuration board** UUCSS command. If the system does not detect the circuit pack, this command will return

  `identifier not assigned`

  or

  `no board`.

If the documentation for the associated maintenance object gives no special instructions for this situation, go to the next step.

- Check the Hardware Error Log for TONE-BD or TDM-BUS errors. Use the **test tdm** and **test tone-clock** commands and use the appropriate maintenance procedures to resolve any identified faults. If this does not resolve the problem, go to the next step
- Reseat the suspect circuit pack using procedures described in *Replacing Circuit Packs* in Chapter 5, 'Responding to Alarms and Errors".

CAUTION:
This procedure can cause a partial or total service outage. Consult thoroughly the documentation for the associated maintenance object before proceeding. Observe the precautions and procedures described above in this chapter.

- Inspect the backplane connectors for bent pins.
- If the system seems to be functioning correctly, but the circuit pack in question will not communicate with the system, replace the circuit pack.

Expansion Interface Circuit Pack LEDs

The Expansion Interface (EI) TN570 circuit pack has the standard red, green and yellow LEDs. The red and green LEDs have the traditional meaning, where red indicates an alarm condition, and green indicates testing in progress.

The yellow LED displays various flashing patterns to provide status information useful in isolating faults in the fiber link and other components connected to the fiber link. Table 7-1 illustrates the EI yellow LED states.

Table 7-1. Expansion Interface Yellow Led Flashing Codes

LED on	LED off	Condition
0.1 sec	0.1 sec	Fiber Out-of-Frame This state indicates a failure of test #989. This may be caused by absence of the opposite end EI or Switch Node Interface, a broken or missing fiber, or a missing lightwave transceiver on either endpoint.
0.5 sec	0.5 sec	In Frame — No Neighbor This state corresponds to a failure of test # 237, usually due to a failure of this EI, or of the EI or SNI at the other end of the fiber.
2 sec	0.2 sec	Expansion Interface Active This is the normal state of an active EI that is an archangel of an Expansion Port Network.
solid on		Expansion Interface Active This is the normal state for an active EI that is not an EPN archangel. These include EPN EIs connected to other EPN EIs in Direct Connect Configurations, and EIs located in the Processor Port Network.
	solid off	Expansion Interface Standby This is the normal state for a standby EI in systems with a duplication option.

Maintenance Circuit Pack LEDs

TN1648 System Access-Maintenance (SYSAM) and TN775 EPN Maintenance circuit packs have seven LEDs on their front panels. The top three LEDs are the standard group of red, green and yellow, and indicate the status of the circuit pack. The green LED on TN775s blinks faintly once per second, indicating continual self-testing.

The second group of three LEDs, labeled "ALARMS", reflect maintenance conditions throughout the system, and indicate alarms reported against other components, as described below. On systems with duplicated SPEs, disregard the Major, Minor, and Warning alarm LEDs on the standby SYSAM circuit pack.

Only those on the active SYSAM are updated with the current system status. The yellow LED that is third from the top indicates which SYSAM is active.

MAJOR (red) flashing	Major Alarm against a component in the same cabinet, (PPN for SYSAM, and EPN for MAINT).
MAJOR (red) solid	Major Alarm against a component in another cabinet in the system.
MINOR (red) flashing	Minor Alarm against a component in the same cabinet.
MINOR (red) solid	Minor Alarm against a component in another cabinet.
WRNG (yellow) flashing	Warning Alarm against a component in the same cabinet.
WRNG (yellow) solid	Warning Alarm against a component in another cabinet.
ACK (green) on	Acknowledged; alarm has been reported to INADS.
EMERGENCY TRANSFER (red) on	Emergency transfer has been invoked. This occurs upon power-up as well as during disabling failures.

These LEDS are illustrated on the following page.

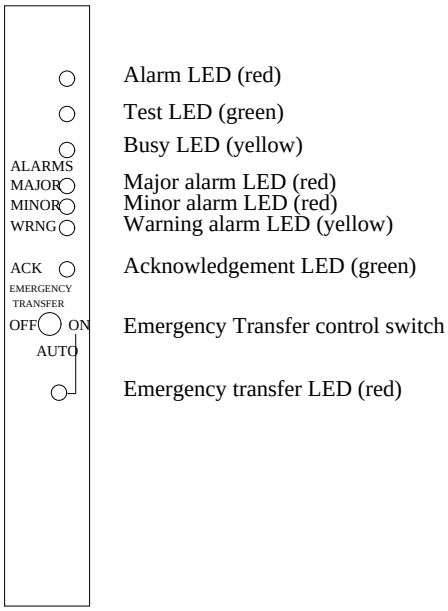

Figure 7-2. SYSAM and EPN Maintenance Circuit Pack LEDs

Duplication Interface Circuit Pack LEDs

In systems with duplicated SPEs, (High Reliability and Critical Reliability), there are two Duplication Interface UN330B circuit packs. One is located in carrier A and one in carrier B of the PPN. Each circuit pack has four LEDs. The top three have the traditional function of indicating the status of the pack.

The LED located at the bottom of the faceplate directly beneath the SPE Select switch is labeled OVERRIDE. Under normal operating conditions, the SPE Select switch is in the AUTO (center) position, and the OVERRIDE LED remains unlit. This means that the system controls which SPE is active. System selection of the active SPE can be manually overridden by moving the SPE Select switches from the AUTO position to either the ‘‘A’’ position or the ‘‘B’’ position on both Duplication Interface circuit packs. At this time, the red OVERRIDE LEDs on both Duplication Interface circuit packs will light steadily to indicate that one SPE is locked Active and the system is not duplicated. If both SPE Select switches are not in the same position, the system software retains control of Active SPE selection, and the OVERRIDE LED remains unlit. When control of the SPE selection is returned to the system by returning the SPE Select switches on both Duplication Interface circuit packs to the AUTO position, the OVERRIDE LED will go dark. Forced SPE selection should be undertaken only after consulting the appropriate sections in Chapter 9, "Maintenance Object Repair Procedures".

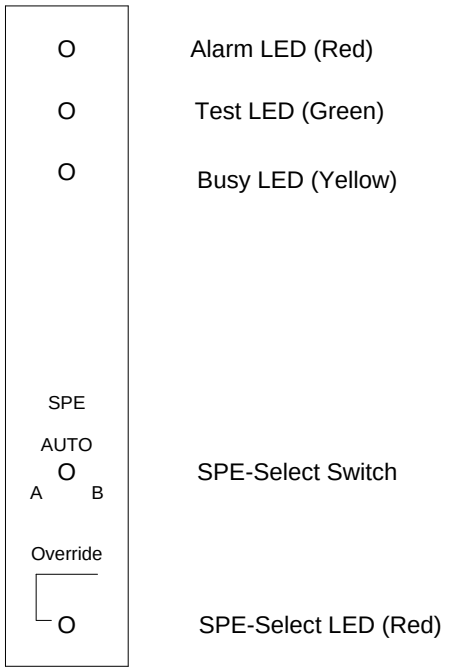

Figure 7-3. Duplication Interface Circuit Pack LEDs

Switch Node Interface LEDs

The Switch Node Interface (SNI) TN573 circuit pack has the standard red, green and yellow LEDs. The red and green LEDs have the traditional meaning, where red indicates an alarm condition, and green indicates testing in progress.

The yellow LED displays various flashing patterns to provide status information useful in isolating faults in the fiber link and other components connected to the fiber link. Table 7-2 illustrates the SNI yellow LED states.

Table 7-2. Switch Node Interface Yellow Led Flashing States

LED on	LED off	Condition
0.1 sec	0.1 sec	Fiber Out-of-Frame This state indicates a failure of test #238, which may be caused by absence of the opposite end EI or Switch Node Interface, a broken or missing fiber, or a missing lightwave transceiver on either endpoint.
0.5 sec	0.5 sec	In Frame — No Neighbor This state corresponds to a failure of test # 237, usually due to a failure of this SNI, or the EI or SNI at the opposite of the fiber. This condition may also be due to a faulty Switch Node Clock.
solid on		SNI Active This is the normal state for an active SNI.
	solid off	SNI Standby This is the normal state for a standby SNI in systems with a duplication option.

DS1C Circuit Pack LEDs

Seven LEDs provide an indication of the state of the DS1 Converter (DS1C) TN574 circuit pack and the DS1 facilities. The top group has the standard red, green and yellow LEDs. The red and green LEDs have the traditional meaning, where red indicates an alarm condition, and green indicates testing in progress. The four green LEDs on the bottom indicate the status of the DS1 facilities (see following section).

The yellow LED is used to indicate the state of the Fiber Interface, the Fiber Channel, and the DS1 channel in the following manner and order of priority.

Table 7-3. DS1C Yellow Led Flashing States

LED on	LED off	Condition
0.1 sec	0.1 sec	Fiber Out-of-Frame or Fiber Loss of Signal
0.5 sec	0.5 sec	In Frame, fiber channel down The fiber channel communicating between the DS1C and the other fiber endpoint (EI or SNI) is down.
1 sec	1 sec	In frame, DS1 channel down The channel between the two DS1Cs in the DS1C complex is down.
2 sec	0.2 sec	No response from SPE the SPE is not acknowledging messages from the DS1C or the communications link to the SPR is down.
solid on		DS1C active This is the normal state for an active DS1C.
	solid off	DS1C standby This is the normal state for a standby DS1C in Critical Reliability Systems (duplicated PNC).

DS1 Facility LEDs

Below the three standard LEDs on the DS1C circuit pack are four green LEDs used to indicate whether a receive signal is present for each of the four DS1 facilities. Figure 7-4 below shows which facility (A, B, C, or D) corresponds to each LED. If a green LED is off, there is a Loss of Signal condition on the DS1 facility associated with that LED. The presence of a signal does not guarantee that the signal is using the correct framing format or line coding; an Alarm Indication Signal indicating that the opposite end of the DS1C complex is out of service may be present.

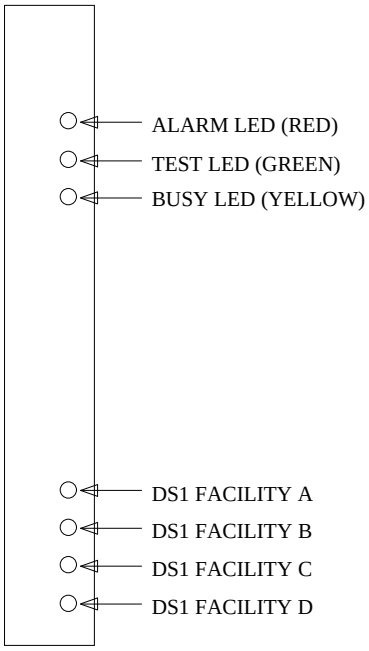

Figure 7-4. TN574 DS1C Circuit Pack LEDs

Tone-Clock Circuit Pack LEDs

The TN768 and TN780 Tone-Clock circuit packs have the standard red, green and yellow LEDs. The red LED has the traditional meaning. The yellow and green LEDs flash in specific patterns to indicate the status of the circuit pack as follows. The standby status applies only to systems with a duplication option, (High Reliability and Critical Reliability).

Table 7-4. Tone-Clock LED Flashing Codes

Flashing Pattern	Tone-Clock State	Condition
Flashing yellow 2.7 seconds on	Active	An external timing source is being used as a synchronization reference.
Flashing yellow 2.7 seconds off	Active	The local oscillator on the Tone-Clock synchronization reference.
Yellow on solid	Active	The circuit pack has been reset but has not been told which synchronization reference source to use.
Yellow off solid	Standby	The circuit pack is in standby mode, (not generating tones or supplying clocks).
Green and yellow ("jingle bells") .1 seconds on, .2 seconds off .1 seconds on,.4 seconds off, .4 seconds on, .4 seconds off	Standby	The system is running maintenance tests on the standby circuit pack.
Other green and yellow patterns	Active	The system is running maintenance tests on the active circuit pack.

Maintenance/Test Circuit Pack LEDs

The TN771D Maintenance/Test circuit pack has the standard red, green, and yellow LEDs. The red and green LEDs have the traditional meaning, where red indicates an alarm condition, and green indicates testing in progress.

The yellow LED can be off, on continuously, or flashing depending on the mode of operation of the TN771 and whether or not it has detected errors. The yellow LED is on steady when the TN771's analog test port or digital test ports are being used to test trunks or line circuits. The yellow LED is also used to indicate Packet Bus status. Table 7-5 illustrates the Maintenance/Test yellow LED states as they apply to Packet Bus activity.

Table 7-5. TN771 Maintenance/Test Yellow LED States

LED State ‡	TN771 Mode	Condition
Solid off	Normal	The Maintenance/Test circuit pack detects no Packet Bus faults.
Solid on*	Normal	The Maintenance/Test Packet Bus port has successfully reconfigured the Packet Bus around a fault.
Flashing (1 Hz)	Normal	The Maintenance/Test Packet Bus port is unable to reconfigure the Packet Bus around a fault.
Solid off	Standalone†	The Maintenance/Test detects no Packet Bus faults.
Solid on	Standalone	This condition cannot normally occur. The LED is always either off or blinking in standalone mode.
Flashing (1 Hz)	Standalone	The Maintenance/Test Packet Bus port detects a Packet Bus fault.

* Because the yellow LED on the Maintenance/Test circuit pack can also be on steady when the digital and analog test ports on the circuit pack are in use, exact interpretation of the yellow LED may require that the technician busy out the analog and digital test ports or examine the error and alarm logs for PKT-BUS errors and alarms.

† "Standalone" refers to the TN771's capability to operate autonomously as a troubleshooting aid. A detailed description of the TN771 standalone mode is provided in the *Packet Bus Fault Isolation and Correction* section of Chapter 9, "Maintenance Object Repair Procedures".

‡ It takes 5 to 10 seconds for the yellow LED to respond to a change in the state of the Packet Bus.

LEDs on Standby Components

In high reliability and critical reliability option systems, duplicated components which are on standby will usually have their yellow LEDs unlit, with the following exceptions.

- The Major, Minor and Warning alarm LEDs on the SYSAM circuit pack on the standby SPE do not give reliable indications. Pay attention only to those LEDs that are on the active SYSAM circuit pack.
- The yellow LED will blink on and off when the standby Processor circuit pack is up and standby maintenance is running.
- In high reliability systems with a Center Stage Switch, (duplicated SPE, simplex PNC), the standby Switch Node Clock's yellow LED is off. In critical reliability systems, the standby SNC is located on a separate carrier and normally remains lit.
- Yellow LEDs on Power Units on standby carriers normally remain lit.

When LED indications are not clear, use the **status pnc, status spe** and **status pn** commands to determine which components are active.

Maintenance Commands

8

This chapter contains descriptions of commands available to the craft login. Introductory sections explain the meaning of common input parameters, or command line arguments, common output fields, and error codes for busyout, release and reset commands. There is also a general section describing the common elements of busyout and release commands. The individual command sections that follow describe how to use each command and interpret the results. Login procedures for the G3-MT appear in Chapter 3, "Generic 3 Management Terminal".

NOTE:
When the successful execution of a command is prevented, an error message that is usually self-explanatory is displayed. If the following message appears, software is most likely corrupted:

```
Error encountered; can't complete request
```

NOTE:
In this case, follow normal escalation procedures.

Command Line Syntax

Each command consists of an action word, an object upon which the action is performed, and optional qualifiers that modify the execution of the command. (In some cases the choice of a qualifier may be required.) The syntax of the command appears under the heading at the beginning of each command description. The syntax is interpreted as follows:

Command	Object	Optional Qualifiers
test station	***extension***	[**short|long**] [**repeat** number | **clear**] [**schedule]**
bold	bold italic if a variable, bold if entered literally	bracketed; either/or choices are separated by a vertical slash (|); bold italic if a variable, bold if entered literally

Command words can be abbreviated. A partially spelled word will be recognized as long as enough letters are entered to distinguish it from other valid entries. Otherwise, the screen will display a selection of command words that match the abbreviation. For example, **test alarms step short clear** can be entered as **t al st sh c**. Leading zeroes can be dropped from numerical entries. For example, cabinet number 03 can be entered as 3.

Pressing the HELP key will display all available commands. If an incomplete command has been entered, pressing HELP will display all valid qualifiers for the command.

Common Input Parameters

The following parameters or arguments are used with many different commands to specify either the command object or options that modify how the command is executed. Characters in bold type are entered literally on the command line.

Characters in italic bold type are variables. See the individual command descriptions which follow for synopses of which parameters apply to each command and explanations of less common parameters.

UU
UUC
UUCSS
UUCSSpp

These variables represent the address, by physical location, of the maintenance object to which the command is to be applied. The length of this variable differs for various types of maintenance objects. For example, **display cabinet** requires only the entry of *UU*: **display cabinet 12**. **Test port** requires a location of the form *UUCSSpp*: **test port 05c1506** to test port circuit 6 on the circuit pack in cabinet 5, carrier C, slot 6. The list and display commands are useful in relating maintenance object locations to information such as port network number, extension, link numbers, and so on. Refer to the help screens for these commands and to *DEFINITY Communications System Generic 3 V2 Implementation,* 555-230-653.

Variable	Range	Meaning
UU	1-22	One or two-digit cabinet number For many commands this defaults to cabinet 1, the Processor Port Network (PPN).
C	A-E	Letter designation of a circuit pack carrier For many commands relating to SPE or EPN control circuit packs, this defaults to A, the control carrier. For PPNs with duplicated SPEs, A or B must usually be specified for SPE maintenance objects.
SS	1-21	One or two-digit number identifying a circuit pack slot on a carrier For many commands relating to SPE or EPN control circuit packs, this usually defaults to the only possible slot number.
pp	1-24	One or two-digit number identifying an individual port circuit on circuit pack The range of this variable differs depending on the type of circuit pack.

PN#

One or two-digit port network number.

Expansion Port Network (EPN) cabinets may contain one or two port networks. Use **list cabinet** to find which port networks are in each cabinet.

print

When the **print** qualifier is specified on the command line, the command executes immediately (if resources are available) and sends output both to the screen and to a printer connected to the terminal where the command was entered. This option is available for **display**, **list** and **status** commands.

schedule

When **schedule** is specified on the command line,a scheduling form is displayed which allows you to specify a start time for the command. The command is placed in the queue and, when executed, sends the output to the system printer. The **schedule** option is available for **display**, **list** and **test** commands. When used with **display alarms** or **errors**, a full report is generated. The usual selection form for error and alarm reports is suppressed so that it will not interfere with the command's execution when it is issued from the queue.

You can see what commands are currently queued with the **list command-queue** command. A queued command can be canceled with **remove command-queue** job#. This option requires that the system printer be administered on page 4 of the Feature-Related System Parameters form. SeeChapter 5 of *DEFINITY Communications System Generic 3 V2 Implementation,* 555-230-653, for details.

group#

One to three-digit trunk group number; used to address trunk maintenance objects.

Range: 1-666

group#/ member#

Group number followed by a slash and the one to three-digit member number of an individual trunk; used to address trunk maintenance objects.

Range: 1-255

extension

The extension number assigned to the port or other maintenance object.

The number of digits in an extension is determined by the system dial plan. The list and display commands are useful in relating extension numbers, maintenance objects, and other components.

Test Command Parameters

repeat # Used with test commands, the number of times a test sequence is to be repeated.

Range: 1-100 Default: 1

The word **repeat**, or simply the letter **r**, followed by the number.

short, long Used with **test** commands, these specify whether the long or short sequence of tests for this maintenance object is to be run.

The test sequence run varies for each maintenance object. The short sequence is always non-destructive. For some maintenance objects, the long sequence is destructive (disruptive to call service). The maintenance object sections in Chapter 9, "Maintenance Object Repair Procedures" describe the sequences run and error codes returned for each MO.

clear Used with **test** commands, this specifies that the test sequence is to be repeated until any active alarms against the maintenance object is cleared by the passing of tests, or until any test in the sequence fails.

If no such alarms are active, the sequence is run once. The **long clear** combination effects a clearing of all alarms against the maintenance object if no errors are encountered. The **short clear** combination clears only alarms pertinent to the tests in the short sequence.

CAUTION:
If all tests pass, the long clear combination clears all error counters. If firmware counters are cleared while actual problem exists, customer service may degrade due to calls being routed over faulty components.

Common Output Fields

- An indication that the command successfully completed or a self-explanatory message giving a reason for a failure or abort.
- An input form for entering additional information required to complete the command.

  These are described under each command that presents an input form.
- A form listing one or more lines of results with error codes that indicate the reason for a FAILor ABORTresult.

Many commands that use the last form display the fields listed below. Some return one line of output. Other commands that run either one test on several

objects or several different tests on one or more objects return several lines of output. In this case, each line represents one test result.

Port — The address or physical location of the maintenance object. Usually this is of the form UUCSSpp:

Variable	Range	Meaning
UU	1-22	One or two-digit cabinet number
C	A-E	Letter designation of a circuit pack carrier
SS	1-21	One or two-digit number identifying a circuit pack slot on a carrier
pp	1-24	One or two-digit number identifying an individual port circuit on circuit pack

The length of this variable differs for the various types of commands. A port circuit requires a full length address such as 11C1502, which indicates circuit number 2 on the circuit pack in cabinet 11, carrier C, slot 15. A control carrier component such as a SYSAM circuit pack is designated simply as 01B, indicating the SYSAM in carrier B of cabinet 1, the PPN cabinet.

Some maintenance objects such as TDM-BUS are addressed by port network (PN) number. In this case the number is usually preceded by PN. For example, TDM bus A in port network 5 would be designated as PN 05A.

In Critical Reliability systems, Port Network Connectivity is duplicated as two independent sets of PNC components. These are designated A-PNC and B-PNC.

Maintenance Name — The name of the maintenance object as it appears in the alarm and error logs. A description of each MO appears in Chapter 9, "Maintenance Object Repair Procedures".

Alt. Name — The output screens of many commands list an alternate name for certain maintenance objects in addition to their port address (physical location). The meaning of the name depends upon the type of the object, as shown in the following table.

Maintenance Object	Alternate Name	Example
Station	extension	84140
Trunk	trunk group # / member # (001-666) / (001-255)	45/3
Personal CO line	P/ personal CO line group # (001-200)	P/23

Test No. The number of the test run on the maintenance object as part of a test command. Descriptions of each test and its related error codes appear under the relevant maintenance object in Chapter 9, "Maintenance Object Repair Procedures". Some other commands such as **clear firmware-counters** and **reset** also report a test number.

Result One of the following results:

PASS

The command successfully completed. For a test command this indicates that no errors were detected by the test.

ABORT

The command was prevented from completing. See the tables referred to below under Error Code.

FAIL

For test commands, this indicates that a serious error was detected by the test. See the tables referred to below under Error Code.

NO BOARD

The system does not detect a circuit pack in the location specified on the command line.

CONFLICT

Another user was testing this maintenance object.

EPN-DOWN

The EPN holding the maintenance abject is inaccessible. The Expansion Archangel Link may be down.

DISABLED

The maintenance object or test has been disabled by the Tier 3 disable command.

NOT ASSIGNED

The location specified does not have a circuit pack administered to it.

EXTRA BOARD

This result can appear for the Maintenance/Test, Call Classifier, Tone Detector, Announcement and Speech Synthesis circuit packs. Each of these circuit packs has restrictions on how many can be in the system or a port network.The restrictions are as follows:

Maintenance/Test circuit pack: 1 per port network

Tone Detector circuit pack: up to 50 per system

Call Classifier circuit pack: up to 25 per system

Speech Synthesis circuit pack: 40 per system

Announcement circuit pack: 1 per system

Remove the extra circuit pack(s).

Error Code A number indicating the reason for a FAIL or ABORT result. For test commands and other commands that return a test result, consult the tables of test error codes under the relevant maintenance object in Chapter 9, "Maintenance Object Repair Procedures". For busyout, release and reset commands, see also the following sections, "Common Abort and Fail Codes" on page 8-11 and *Test Commands*.

Contention between Simultaneous Commands

The following limits apply to simultaneous maintenance and administration activities:

- Up to eight users can be logged into the system at the same time.
- Up 5 maintenance commands can run concurrently.
- Up to 3 maintenance commands issued from system access port (SAP) or EPN Maintenance circuit pack logins can run concurrently. (The other 2 are reserved for the SYSAM and INADS ports.)
- Up to 5 administration commands can run concurrently.
- In general, a maintenance object or other system entity can be acted upon by only one command at a time. This restriction applies to action commands such as:
  - busyout
  - change
  - clear
  - recycle
  - release
  - set
  - test
- In general, only one SPE component can be acted upon at one time by commands such as those just mentioned.
- When an action command is acting on a circuit pack, that circuit pack and all maintenance objects located on it are unavailable for other commands.
- Display-only commands such as the following generally do not conflict with any other commands.
  - display
  - status
  - get

— monitor

- Certain system-wide actions such as **reset system** and **upgrade software** cannot run at the same time as any other command.
- Most commands require the use of shared system resources in order to execute. When required resources are already in use, the command will abort. For example, **save**, **restore**, **backup**, and **test disk** commands all require the use of the Mass Storage System (MSS). Only one such command can run at one time.

Busyout and Release Commands

The busyout command places the object of the command in a maintenance busy state. In this state, the object is removed from active service and is not available for use by call processing. Services dependent on the busied out component are dropped. If the component supports a link, the link is dropped. No scheduled or periodic background tests are run on the object while it is busied out. Demand maintenance tests can be run on the object, though some tests require that the object be released to complete. A WARNING alarm with error type 18 is logged against each busied out object. All busied out MOs can be displayed by entering error type 18 in the Error Type field on the Hardware Errors Report Form (see **display errors**). The matching release command returns the maintenance object to service, providing the object is not otherwise incapacitated.

On systems with duplicated SPE, busyouts are preserved across planned SPE interchanges and level 1 system resets (Warm). System resets of level 2 or higher release the busied out objects.

A variety of self-explanatory error messages may be displayed if the command cannot be executed as entered. In addition to these there are a number of numerical error codes which may be displayed in the Error Code field if the command ABORTS or FAILS as indicated in the Result field. These are explained in a subsequent section of this chapter, "Common Abort and Fail Codes" on page 8-11.

The following screen display shows a typical result when **busyout board 1c03**is entered for an analog line circuit pack in cabinet 1, carrier c, slot 7 with three administered ports.

```
busyout board 01C03

                         Command Results

 Port          Maintenance Name   Alt. Name     Result     Error Code

01C03           ANL-BD                           PASS
01C0301         ANL-16-L          5409           PASS
01C0302         ANL-16-L          5416           PASS
01C0303         ANL-16-L          5421           PASS
01C0304         ANL-16-L          5422           PASS
01C0305         ANL-16-L          5411           PASS

Command successfully completed
```

The following display shows a typical result for most maintenance objects. See the preceding section, "Common Output Fields" on page 8-5, for an explanation of the fields displayed.

```
busyout disk b

                              COMMAND RESULTS

  Port       Maintenance Name    Alt. Name     Result      Error Code

  01B         DISK                              PASS


Command successfully completed
```

Common Abort and Fail Codes

Table 8-1 lists common error codes associated with abort and fail results for busyout, release, test, and reset commands. In addition to these, many maintenance objects have other unique error codes which are documented in Chapter 9, "Maintenance Object Repair Procedures".

Table 8-1. Common Error Codes for Busyout, Release, Test, and Reset Commands

Error Code	Command Result	Description/ Recommendation
	ABORT	System resources are unavailable to run this command. 1. Try the command again at 1 minute intervals up to 5 times.
0	ABORT	Internal system error. 1. Retry the command at one-minute intervals up to 5 times. 2. If the command continues to abort, follow normal escalation procedures.
1005	ABORT	A DS1 interface circuit pack could not be reset because it is currently supplying the on-line synchronization reference. 1. Use the **set sync** command todesignate a new DS1 interface circuit pack as the on-line reference, then try the reset again.
1010	ABORT	Attempt was made to busyout an object that was already busied out.
1011	ABORT	Attempt was made to release an object that was not first busied out.
1015	ABORT	A reset of this circuit pack requires that all maintenance objects on it be in the out-of-service state. 1. Use the **busyout board** command to place all objects on the circuit pack in the out-of-service state, and try the reset again.
1026	ABORT	The specified TDM bus cannot be busied out because the control channel or system tones are being carried on it. You can use the **set tdm PC** command to switch the control channel and system tones to the other TDM bus. be busied out.
1030	ABORT	This command is not allowed on a circuit pack on the standby SPE.

Continued on next page

Table 8-1. Common Error Codes for Busyout, Release, Test, and Reset Commands — *Continued*

Error Code	Command Result	Description/ Recommendation
1338	ABORT	The system could not execute the command on a component on the Standby SPE because an interchange was pending. 1. Refer to STBY-SPE in Chapter 9, "Maintenance Object Repair Procedures". 2. Try the command again after the SPE interchange occurs. 3. If the command continues to abort, follow normal escalation procedures.
1339	ABORT	The system could not execute the command on a component on the Standby SPE because an handshake communication was down. 1. Refer to STBY-SPE in Chapter 9, "Maintenance Object Repair Procedures". 2. Try the command again after the standby SPE is restored to service. Use **status spe** to determine state of standby SPE. 3. If the command continues to abort, follow normal escalation procedures.
1347	ABORT	The system could not execute the command on a component on the Standby SPE because memory refresh was not complete. 1. Refer to STBY-SPE in Chapter 9, "Maintenance Object Repair Procedures". 2. Try the command again after the standby SPE is restored to service. Use **status spe** to determine state of standby SPE. 3. If the command continues to abort, follow normal escalation procedures.

Continued on next page

Table 8-1. Common Error Codes for Busyout, Release, Test, and Reset Commands — *Continued*

Error Code	Command Result	Description/ Recommendation
1350	ABORT	The system could not execute the command on a component on the Standby SPE because memory shadowing was not enabled. 1. Refer to STBY-SPE in Chapter 9, "Maintenance Object Repair Procedures". 2. Try the command again after the standby SPE is restored to service. Use **status spe** to determine state of standby SPE. 3. If the command continues to abort, follow normal escalation procedures.
2012 2500	ABORT	Internal system error.
2100	ABORT	System resources to run this command were unavailable. 1. Try the command again at 1 minute intervals up to 5 times. 2. If the command continues to abort, follow normal escalation procedures.
62524 62525 62526	ABORT	Maintenance is currently active on the maximum number of maintenance objects that the system can support. This condition is commonly caused by the fact that the system contains a large number of stations or trunks that have been administered, and whose circuit packs are installed, but which are not physically connected. 1. Resolve as many alarms as possible on the station and trunk MOs, or busyout these MOs to prevent maintenance activity on them. Then try the command again.
	NO BOARD	The circuit pack is not physically installed.

Continued on next page

Table 8-1. Common Error Codes for Busyout, Release, Test, and Reset Commands — *Continued*

Error Code	Command Result	Description/ Recommendation
	EXTRA BD	This result can appear for Maintenance/Test, Call Classifier, Tone Detector, Announcement and Speech Synthesis circuit packs. Each of these circuit packs has restrictions on how many can be installed in the system or in a port network. The restrictions are as follows: TN711 Maintenance/Test: 1 /port network TN748 Tone Detector: 50 /system TN744 Call Classifier: 25 /system Speech Synthesizer: 40 /system TN750 Announcement: 1 /system Remove any extra circuit packs.
1	FAIL	For reset commands, the circuit pack was not successfully halted.
2	FAIL	For reset commands, the circuit pack was not successfully restarted after being halted. For both results, replace the circuit pack.
	FAIL	Refer to the applicable maintenance object in Chapter 9, "Maintenance Object Repair Procedures".
	PASS	The requested action successfully completed. If the command was a reset, the circuit pack is now running and should be tested.

Alarm and Error Categories

The **display alarms** and **display errors** commands allow you to generate reports for certain groups of maintenance objects. By entering a category from Table 8-2 into the `Category` field of the input form, you can restrict the report to only those maintenance objects included in that category. The report can be further narrowed down by using the other fields on the form. The first of the following two tables is a list of the categories showing which maintenance objects are included in each one. The second table is sorted by maintenance object and shows in which categories each maintenance object is included

Table 8-2. Alarm and Error Categories

Category	Maintenance Objects
adm-conn	ADM-CONN
announce	ANN-PT
	ANN-BD
	ANNOUNCE
bri/asai	ASAI-ADJ
	ABRI-PORT
	BRI-BD
	BRI-PORT
	BRI-SET
cdr	CDR-LNK
data-mod	BRI-DAT
	DAT-LINE
	DT-LN-BD
	PDMODULE
	TDMODULE

Continued on next page

Table 8-2. Alarm and Error Categories — *Continued*

Category	Maintenance Objects
detector	DTMR-PT
	DETR-BD
	GPTD-PT
	TONE-BD
dup-spe	CARR-POW
	DUPINT
	MEM-BD
	PROCR
	SPE-SELEC
	STBY-SPE
	SW-CTL
	TAPE
environ	AC-POWER
	CABINET
	CARR-POW
	DC-POWER
	EMG-XFER
	EXT-DEV
	POWER
	RING-GEN
exp-intf	AC-POWER
	CARR-POW
	DC-POWER
	DUPINT

Continued on next page

Table 8-2. Alarm and Error Categories — *Continued*

Category	Maintenance Objects
	EPN-SNTY
	EXP-INTF
	MAINT
	SYNC
	TDM-CLK
	TONE-BD
ext-dev	CUST-ALM
	EXT-DEV
generatr	STRAT-3
	SYNC
	TDM-CLK
	TONE-PT
	TONE-BD
inads-link	INADS
infc	EXP-INTF
	ISDN-LNK
	ISDN-SGRP
maint	MAINT
mass-st	DISK
	H-ADAPTR
	STO-DATA
	TAPE

Continued on next page

Table 8-2. Alarm and Error Categories — *Continued*

Category	Maintenance Objects
mbus	DUPINT
	MEM-BD
	PROCR
	SW-CTL
	TAPE
memory	MEM-BD
misc	CONFIG
	ERR-LOG
	MIS
	PROC-SAN
	SYSTEM
	TIME-DAY
mnt-test	M/T-ANL
	M/T-BD
	M/T-DIG
	M/T-PKT
modem	MODEM-BD
	MODEM-PT
mssnet	H-ADAPTR
	SW-CTL
netcon	SW-CTL

Continued on next page

Table 8-2. Alarm and Error Categories — *Continued*

Category	Maintenance Objects
pkt	M/T-PKT
	PKT-BUS
pms/jrnl	JNL-PRNT
	PMS-LINK
pnc	DS1C-BD
	DS1-FAC
	EXP-INTF
	FIBER-LK
	PNC-DUP
	SN-CONF
	SNC-BD
	SNC-LINK
	SNC-REF
	SNI-BD
	SNI-PEER
pncmaint	DS1C-BD
	DS1-FAC
	EXP-INTF
	FIBER-LK
	PNC-DUP
	SN-CONF
	SNC-BD
	SNC-LINK
	SNC-REF

Continued on next page

Table 8-2. Alarm and Error Categories — *Continued*

Category	Maintenance Objects
	SNI-BD
pnc-peer	SNI-PEER
procr	PROCR
quick-st	ABRI-PT
	ADXDP-PT
	ANL-16-LINE
	ANL-LINE
	ANL-NE-LINE
	ANN-PT
	ANNOUNCE
	ASAI-ADJ
	AUDIX-PT
	AUX-TRK
	BRI-PT
	BRI-SET
	CDR-LINK
	CLSFY-PT
	CO-DS1
	CO-TRK
	CONFIG
	DAT-LINE
	DID-DS1
	DID-TRK
quick-st	DIG-LINE

Continued on next page

Table 8-2. Alarm and Error Categories — *Continued*

Category	Maintenance Objects
(cont)	DIOD-TRK
	DISK
	DS1-FAC
	DS1C-BD
	DTMR-PT
	EPN-SANITY
	EXP-INTF
	EXP-PN
	FIBER-LNK
	GPTD-PT
	HYB-LINE
	ISDN-LNK
	ISDN-TRK
	JNL-PRNT
	MAINT
	MEM-BD
	MET-LINE
	MODEM-PT
	OPS-LINE
	PDATA-PT
	PDMODULE
	PGATE-PT
	PKT-BUS
	PKT-INT
	PMS-LINE
	PMS-PRNT
quick-st	PNC-DUP

Continued on next page

Table 8-2. Alarm and Error Categories — *Continued*

Category	Maintenance Objects
(cont)	PRI-CDR
	PROCR
	S-SYN-PT
	SEC-CDR
	SN-CONF
	SNC-BD
	SNC-LNK
	SNC-REF
	SNI-BD
	SNI-PEER
	SW-CNTL
	SYS-PRNT
	SYSAM
	SYSLINK
	SYSTEM
	TAPE
	TDM-BUS
	TDM-CLK
	TDMODULE
	TIE-DS1
	TIE-TRK
	TONE-BD
	TTR-LEV
spe	DISK
	DUP-CHL
	DUPINT
spe	H-ADAPTR

Continued on next page

Table 8-2. Alarm and Error Categories — *Continued*

Category	Maintenance Objects
(cont)	MEM-BD
	PKT-INT
	PROCR
	SPE-SELEC
	STBY-SPE
	STO-DATA
	SW-CTL
	SYSAM
	SYSTEM
	TAPE
s-syn	S-SYN-BD
	S-SYN-PT
stabd	ABRI-PORT
	ADXDP-BD
	ADXDP-PT
	ANL-16-LINE
	ANL-BD
	ANL-BD
	ANL-LINE
	ANL-NE-LINE
	ASAI-ADJ
	AUDIX-BD
	AUDIX-PT
	BRI-BD
	BRI-PORT
	BRI-SET

Continued on next page

Table 8-2. Alarm and Error Categories — *Continued*

Category	Maintenance Objects
	DIG-BD
	DIG-LINE
	HYB-BD
	HYB-LINE
	MET-BD
	MET-LINE
stacrk	ADXDP-PT
	ANL-LINE
	ANL-16-LINE
	ANL-NE-LINE
	AUDIX-PT
	DIG-LINE
	HYB-LINE
	MET-LINE
	OPS-LINE
stations	ABRI-PORT
	ADXDP-PT
	ANL-16-LINE
	ANL-LINE
	ANL-NE-LINE
	ASAI-ADJ
	AUDIX-PT
	BRI-PORT
	BRI-SET
	DIG-LINE

Continued on next page

Table 8-2. Alarm and Error Categories — *Continued*

Category	Maintenance Objects
	HYB-LINE
	MET-LINE
	OPS-LINE
sys-link	SYS-LINK
sys-prnt	SYS-PRNT
tape	TAPE
tdm	SW-CTL
	TDM-BUS
tone	CLSFY-BD
	CLSFY-PT
	DETR-BD
	DTMR-PT
	GPTD-PT
	STRAT-3
	SYNC
	TDM-CLK
	TONE-BD
	TONE-PT
	TTR-LEV
trkbd	AUX-BD
	AUX-TRK

Continued on next page

Table 8-2. Alarm and Error Categories — *Continued*

Category	Maintenance Objects
(cont)	CO-BD
	CO-DS1
	CO-TRK
	DID-BD
	DID-DS1
	DID-TRK
	DIOD-BD
	DIOD-TRK
	DS1-BD
	ISDN-TRK
	PE-BCHL
	TIE-BD
	TIE-DS1
	TIE-TRK
	UDS1-BD
	WAE-PT
trkcrk	AUX-TRK
	CO-DS1
	CO-TRK
	DID-DS1
	DID-TRK
	DIOD-TRK
	ISDN-LNK
	ISDN-TRK
	TIE-DS1
	TIE-TRK

Continued on next page

Table 8-2. Alarm and Error Categories — *Continued*

Category	Maintenance Objects
trunks	CO-TRK
	AUX-TRK
	CO-DS1
	DID-DS1
trunks	DID-TRK
(cont)	DIOD-TRK
	ISDN-LNK
	ISDN-TRK
	PE-BCHL
	TIE-DS1
	TIE-TRK
	WAE-PORT
wide-band	PE-BCHL
	WAE-PORT

Table 8-3. Alarm and Error Categories Sorted by Maintenance Object

Maintenance Object	Categories
ABRI-PORT	bri/asai
	quick-st
	stabd
	stations
AC-POWER	environ
	exp-intf
ADM-CONN	adm-conn
ADXCL-BD	
ADXCL-PT	
ADXCL-RS	
ADXDP-BD	quick-st
	stabd
ADXDP-PT	quick-st
	stabd
	stacrk
ADXDP-RS	
ANL-16-L	quick-st
	sta-bd
	stacrk

Continued on next page

Table 8-3. Alarm and Error Categories Sorted by Maintenance Object — *Continued*

Maintenance Object	Categories
	stations
ANL-BD	stabd
ANL-LINE	quick-st
	stabd
	stacrk
	stations
ANN-BD	announce
ANN-PT	announce
	quick-st
ANNOUNCE	quick-st
	announce
ASAI-ADJ	bri/asai
	quick-st
	sta-bd
	stations
AUDIX-BD	quick-st
	sta-bd
AUDIX-PT	quick-st
	stabd
	stacrk
	stations

Continued on next page

Table 8-3. Alarm and Error Categories Sorted by Maintenance Object — *Continued*

Maintenance Object	Categories
AUDIX-RES	
AUX-BD	trkbd
AUX-TRK	quick-st trkbd trkcrk trunks
BRI-BD	bri/asai sta-bd
BRI-DAT	data-mod quick-st
BRI-PORT	bri/asai quick-st stabd stations
BRI-SET	bri/asai quick-st stabd stations
CABINET	environ

Continued on next page

Table 8-3. Alarm and Error Categories Sorted by Maintenance Object — *Continued*

Maintenance Object	Categories
CARR-POW	environ
	exp-intf
CDR-LNK	cdr
	quick-st
CLSFY-BD	tone
CLSFY-PT	tone
	quick-st
CO-BD	trkbd
CO-DS1	quick-st
	trkbd
	trkcrk
	trunks
CO-TRK	quick-st
	trkbd
	trkcrk
	trunks
CONFIG	misc
	quick-st
CUST-ALM	ext-dev

Continued on next page

Table 8-3. Alarm and Error Categories Sorted by Maintenance Object — *Continued*

Maintenance Object	Categories
DAT-LINE	data-mod
	quick-st
DC-POWER	environ
	exp-intf
DETR-BD	detector
	tone
DID-BD	trkbd
DID-DS1	quick-st
	trkbd
	trkcrk
	trunks
DID-TRK	quick-st
	trkbd
	trkcrk
	trunks
DIG-BD	sta-bd
DIG-LINE	quick-st
	stabd
	stacrk
	stations

Continued on next page

Table 8-3. Alarm and Error Categories Sorted by Maintenance Object — *Continued*

Maintenance Object	Categories
DIOD-BD	trkbd
DIOD-TRK	quick-st
	trkbd
	trkcrk
	trunks
DISK	quick-st
	mass-st
	spe
DS1-BD	trkbd
DS1-FAC	pnc
	pncmaint
	quick-st
DS1C-BD	pnc
	pncmaint
	quick-st
DT-LN-BD	data-mod
DTMR-PT	detector
	tone
	quick-st
DUP-CHL	spe

Continued on next page

Table 8-3. Alarm and Error Categories Sorted by Maintenance Object — *Continued*

Maintenance Object	Categories
DUPINT	dup-spe
	exp-intf
	mbus
	spe
EMG-XFER	environ
EPN-SNTY	exp-intf
	quick-st
ERR-LOG	misc
EXP-INTF	exp-intf
	infc
	pnc
	pncmaint
	quick-st
EXP-PN	quick-st
EXT-DEV	environ
	ext-dev
FIBER-LK	pnc
	pncmaint
	quick-st

Continued on next page

Table 8-3. Alarm and Error Categories Sorted by Maintenance Object — *Continued*

Maintenance Object	Categories
GPTD-PT	detector
	quick-st
	tone
H-ADAPTR	mass-st
	mssnet
	spe
HYB-BD	stabd
HYB-LINE	quick-st
	stabd
	stacrk
	stations
INADS	inads
ISDN-LNK	infc
	quick-st
	trkcrk
	trunks
ISDN-SGR	infc
ISDN-TRK	quick-st
	trkbd
	trkcrk
	trunks

Continued on next page

Table 8-3. Alarm and Error Categories Sorted by Maintenance Object — *Continued*

Maintenance Object	Categories
JNL-PRNT	quick-st
MAINT	exp-intf
	maint
	quick-st
MEM-BD	dup-spe
	mbus
	memory
quick-st	
	spe
MET-BD	stabd
MET-LINE	quick-st
	stabd
	stacrk
	stations
MIS	misc
MODEM-BD	modem
MODEM-PT	modem
	quick-st
M/T-ANL	mnt-test

Continued on next page

Table 8-3. Alarm and Error Categories Sorted by Maintenance Object — *Continued*

Maintenance Object	Categories
M/T-BD	mnt-test
M/T-DIG	mnt-test
M/T-PKT	mnt-test pkt
OPS-LINE	quick-st stacrk stations
PDATA-BD	
PDATA-PT	quick-st
PDMODULE	data-mod quick-st
PE-BCHL	trunkbd trunks wideband
PGATE-BD	
PGATE-PT	quick-st
PKT-BUS	pkt

Continued on next page

Table 8-3. Alarm and Error Categories Sorted by Maintenance Object — *Continued*

Maintenance Object	Categories
	quick-st
PKT-INT	quick-st
	spe
PMS-LINK	pms/jrnl
	quick-st
PMS-PRNT	quick-st
PNC-DUP	pnc
	pncmaint
	quick-st
POWER-AC	
POWER-DC	
PRI-CDR	quick-st
PROC-SAN	misc
PROCR	dup-spe
	mbus
	procr
	quick-st
	spe

Continued on next page

Table 8-3. Alarm and Error Categories Sorted by Maintenance Object — *Continued*

Maintenance Object	Categories
RING-GEN	environ
S-SYN-BD	quick-st
S-SYN-PT	quick-st
	s-syn
SEC-CDR	quick-st
SN-CONF	pnc
	pncmaint
	quick-st
SNC-BD	pnc
	pncmaint
	quick-st
SNC-LINK	pnc
	pncmaint
	quick-st
SNC-REF	pnc
	pncmaint
	quick-st
SNI-BD	pnc
	pncmaint

Continued on next page

Table 8-3. Alarm and Error Categories Sorted by Maintenance Object — *Continued*

Maintenance Object	Categories
	quick-st
SNI-PEER	pnc
	pnc-peer
	quick-st
SPE-SELE	dup-spe
	spe
STBY-SPE	dup-spe
	spe
STO-DATA	mass-st
	spe
STRAT-3	generatr
	tone
SVC-SLOT	
SW-CTL	dup-spe
	mbus
	mssnet
	netcon
	quick-st
	spe
	tdm

Continued on next page

Table 8-3. Alarm and Error Categories Sorted by Maintenance Object — *Continued*

Maintenance Object	Categories
SYNC	exp-intf
	generatr
	tone
SYS-LINK	sys-link
SYS-PRNT	quick-st
	sys-prnt
SYSAM	quick-st
	spe
SYSTEM	misc
	quick-st
	spe
TAPE	dup-spe
	mass-st
	mbus
	quick-st
	spe
	tape
TDM-BUS	quick-st
	tdm
TDM-CLK	exp-intf
	generatr

Continued on next page

Table 8-3. Alarm and Error Categories Sorted by Maintenance Object — *Continued*

Maintenance Object	Categories
	quick-st
	tone
TDMODULE	data-mos
	quick-st
TIE-BD	trkbd
TIE-DS1	quick-st
	trkbd
	trkcrk
	trunks
TIE-TRK	quick-st
	trkbd
	trkcrk
	trunks
TIME-DAY	misc
TONE-BD	detector
	exp-intf
	generatr
	quick-st
	tone
TONE-PT	generatr
	tone
TSC-ADM	
TTR-LEV	quick-st
	tone

Continued on next page

Table 8-3. Alarm and Error Categories Sorted by Maintenance Object — *Continued*

Maintenance Object	Categories
UDS1-BD	trkbd
WAE-PORT	trunkbd
	trunks
	wideband

Backup Disk

backup disk **[spe-a | spe-b | active | standby | both | either] [incremental | full]**

This command copies all information from the disk drive in the specified processor carrier(s) to the tape system in the same carrier. This can take up to 40 minutes to complete.

On a simplex SPE, the default is to perform an incremental backup of SPE-A. On a duplex SPE, the default is to perform an incremental backup on both SPE-A and SPE-B.

NOTE:
The backup command can take up to 10 minutes to complete. Avoid pressing the ENTER key on the keyboard during this time, since doing so will cause the result messages to be lost.

Parameters

spe-a	This specifies a backup from the A processor carrier hard disk to the A SPE tape.
spe-b	This specifies a backup from the B processor carrier hard disk to the B SPE tape.
active	This specifies a backup of the active processor.
standby	This specifies a backup of the standby processor.
both	This specifies a backup of both processor carriers.
either	This specifies a backup of both SPE carriers. If the standby is not accessible, the command performs a backup of the active SPE.
incremental	This causes all data marked "good" that has been changed since the last backup to tape to be copied to the tape. (That is, all files that have a date newer than the date on the tape file).
full	This causes all data to be copied from disk to tape regardless of the dates and the state of the data ("good" or "bad").

Examples

backup disk
backup disk spe-b
backup disk active incremental

Output

Processor	This identifies the processor carrier that was backed up (i.e. SPE-A, or SPE-B).
Command Completion Status	Results of the command, and the reason for any failure are displayed.

For the following output example, assume that the command, **backup disk** is entered on a duplex system.

```
backup disk
                                BACKUP DISK

Processor Command Completion Status

SPE-A      Success
SPE-B      Success



Command Successfully Completed
```

Busyout Access-Endpoint

busyout access-endpoint extension

This command applies only to G3r V2 systems.

This command places all ports associated with the specified access endpoint in a maintenance busy state. (See the general notes on maintenance busyout at the beginning of this chapter).

CAUTION:
This command is destructive. Any active call on the access endpoint will be dropped.

Output

Maintenance Name	The type of maintenance object that is being busied out: `WAE-PORT` for wideband access endpoints, or `TIE-DS1` for single port access endpoints.

The following display shows a typical result when **busy pri 22501**is entered for a wideband access endpoint.

```
busyout access-endpoint 22502                        page 1 of 1

                           COMMAND RESULTS

Port      Maintenance Name  Alt. Name     Result            Error Code

01C1101   WAE-PORT          22502         PASS
01C1102   WAE-PORT          22502         PASS
01C1103   WAE-PORT          22502         PASS
01C1104   WAE-PORT          22502         PASS
01C1105   WAE-PORT          22502         PASS
01C1106   WAE-PORT        22502       PASS          Command Successfully Completed
```

For more information, see the "Busyout and Release Commands", "Common Input Parameters", and the "Common Output Fields" sections at the beginning of this chapter.

Busyout Board

busyout board UUCSS

The busyout board command puts every administered maintenance object on a specified circuit pack in a maintenance busy state. (See "Busyout and Release Commands" at the beginning of this chapter.) The ports on the board will not be available for call processing.

CAUTION:
This command is service disrupting and may generate extraneous alarms. All calls and application links dependent upon the busied out circuit pack will be dropped.

On Critical Reliability systems an active Expansion Interface, Switch Node Interface, or DS1 Converter circuit pack cannot be busied out. To busy out one of the above on the standby PNC, the standby PNC must first be busied out via **busyout pnc**. On High or Critical Reliability Systems an active Switch Node Clock circuit pack cannot be busied out.

Examples

busyout board 01c11
bus b 1c11

For more information see the "Busyout and Release Commands", "Common Input Parameters", and the "Common Output Fields"sections at the beginning of this chapter.

Busyout CDR-Link

busyout cdr-link [primary | secondary]

The busyout cdr-link command puts a specified call detail recording link in a maintenance busy state. (See "Busyout and Release Commands" at the beginning of this chapter). When busied out, the link is dropped and must be reestablished later when returned to service. See the description of **status link** for more information on links.

Parameters

primary | secondary	This qualifier is used to specify one of the two possible links to CDR output devices. Primary is the default.

Examples

busyout cdr-link
busy cdr secondary

For more information see the "Busyout and Release Commands", "Common Input Parameters", and the "Common Output Fields"sections at the beginning of this chapter.

Busyout Data-Module

busyout data-module extension

The busyout data module command puts the specified data module in a maintenance busy state, whether or not it is installed. (See "Busyout and Release Commands" at the beginning of this chapter). No call processing may be executed on the data modules or over the data channels.

A list of all data-modules administered on the system can be displayed with **list data-module**. This form gives the extension, port, type and other data for each

data-module. The following table gives the maintenance object name for each type of data-module as listed in the "Type" field on the list data-module form.

Type	Maintenance Object
adm-t	BRI-SET
announcement	DAT-LINE
dtdm	DIG-LINE
pdm	PDMODULE
system-port	DAT-LINE
x.25	PGATE-PT

Busyout Disk

busyout disk C

The busyout disk command puts the hard disk drive of the Mass Storage System (MSS) into a maintenance busy state. (See "Busyout and Release Commands" at the beginning of this chapter). Placing the disk in a busyout state prevents read and write access to the disk except when performed by demand maintenance testing. This command and the release command abort if any other MSS operation has already begun.

When the release command is issued, all alarms against the disk are automatically resolved. If the host-adapter is busied out, it must be released before the disk can be released.

When the host-adapter becomes out-of-service due to test or reset failures and becomes uninstalled, the disk also becomes uninstalled, and all access by system software and maintenance tests and commands is blocked.

The cabinet is always **1** and need not be entered. The carrier, **a** or **b**, must be entered only on systems with duplicated SPEs.

For more information see the "Busyout and Release Commands", "Common Input Parameters", and the "Common Output Fields"sections at the beginning of this chapter.

Busyout DS1-Facility

busyout ds1-facility UUCSSf **[override]**

The busyout ds1-facility command puts a specified DS1 facility of a DS1C Complex into a maintenance busy state. (See "Busyout and Release Commands"

at the beginning of this chapter). Each DS1C complex utilizes from one to four DS1 facilities. One of the facilities, called the packet facility, carries the control channel for all facilities in the complex, all packet traffic, and some circuit connections. The other facilities carry circuit connections only. Whenever the circuit pack resets, the packet facility is set on the "a" facility. If system software detects a problem with this facility, it switches the packet and control traffic to another facility. The busyout command is not allowed on the packet facility unless the override qualifier is used. When the override option is used, all packet and circuit traffic on the packet facility is switched to one of the other 3 facilities; all traffic that was on the destination facility before the switch is dropped. There is no way to tell which facility is carrying the packet and control traffic without attempting to busy it out, *but this will cause a service outage on the facility if it is not the packet facility.* If there is only one facility left in service on the circuit pack, it cannot be busied out. In this case, the circuit pack must be busied.

CAUTION:

Busying out a non-packet facility disrupts all traffic carried on that facility. Use of the override command to busy the packet facility disrupts all traffic on the facility to which the packet and control traffic is moved. Which facility this will be cannot be determined in advance.

On Critical Reliability systems (duplicated PNC) a facility on the active PNC cannot be busied out. To busy out a facility on the standby PNC, the standby PNC must first be busied out via **busyout pnc**.

A system restart of the system will remove a previously busied out DS1 facility from the busyout state. For more information on DS1C complexes, see DS1C-BD and DS1-FAC in Chapter 9, "Maintenance Object Repair Procedures".

Parameters

UUCSSf — The location of a DS1 Converter facility. F represents a letter (a-d) used to identify the separate DS1 facilities connected to the DS1 Converter.

override — This option must be used to busyout the facility on a DS1 Converter that is carrying the packet traffic and control messages. See the caution note above.

Output

Port — The DS1 facility as described above in UUCSSf.

The following display shows a typical result when **busyout ds1-facility 2e1a** is entered.

```
busyout ds1-facility 02e01a

                          COMMAND RESULTS

  Port    Maintenance Name  Alt. Name   Result    Error Code

  02E01A  DS1-FAC                       PASS


Command successfully completed
```

For more information see "Busyout and Release Commands" and "Common Output Fields" at the beginning of this chapter.

Busyout Fiber-Link

busyout fiber-link fiber# [a-pnc | b-pnc]

The busyout fiber-link command puts a specified fiber link into a maintenance busy state. (See "Busyout and Release Commands" at the beginning of this chapter). A fiber link is a connection carrying all circuit and packet traffic between two port networks, two switch nodes, or a port network and a switch node. A fiber link may contain a DS1C Complex used to provide connectivity to a remote EPN.

CAUTION:
On systems with simplex PNC, the busyout command is destructive. All calls and application links carried on the busied out fiber link will be torn down, and new calls will not be established over the link.

On systems with duplicated PNC, the command is allowed only on a fiber link on the standby PNC, does not impact service, and requires that the standby PNC be busied first.

For more information on fiber links, see FIBER-LNK in Chapter 9, "Maintenance Object Repair Procedures".

Parameters

fiber#	The administered number assigned to the fiber link. (In a system with duplicated PNC, this represents a fiber link pair.) **List fiber-link** displays a list of all fiber links with their numbers, endpoints, and other useful information.
a-pnc	If Port Network Connectivity is duplicated, this identifier is used to distinguish between the two fibers of a duplicated pair.F or non duplicated Port Network Connectivity "a-pnc" is the only valid qualifier.
b-pnc	On a system with duplicated PNC, this identifier distinguishes between the two fibers of a duplicated fiber pair. This identifier is invalid on a system with simplex PNC.

If neither PNC is specified, the command defaults to **a-pnc**.

Examples

Duplex PNC: **busyout fiber-link 01 b-pnc busyout fiber-link 03** (defaults to a-pnc)

For more information see see the "Busyout and Release Commands", "Common Input Parameters", and the "Common Output Fields" sections at the beginning of this chapter.

Busyout Host-Adapter

busyout host-adapter C

The busyout host-adapter command puts the host-adapter circuit on the MSSNET circuit pack into a maintenance busy state. When the host-adapter is busied out, the tape and disk devices on the same carrier are also busied out, and warning alarms with error type 526 are raised against DISK and TAPE. The tape and disk do remain available for maintenance testing. This command will abort if any other MSS operation has already begun.

When the host-adapter is out of service due to test failures, or uninstalled due to a reset failure, the related tape and disk devices are also placed in the

uninstalled state. All access by system software, maintenance tests, and commands, including reset, are blocked from execution.

Parameters

C The cabinet is always **1** and need not be entered. On systems with duplicated SPEs only, carrier **a** or **b** must be entered.

Examples

Simplex: **busyout host-adapter**

Duplicated: **busyout host-adapter b**

For more information see the "Busyout and Release Commands", "Common Input Parameters", and the "Common Output Fields" sections at the beginning of this chapter.

Busyout Journal-Printer

busyout journal-printer pms-log | wakeup-log

The busyout journal-printer command puts the link to the Property Management System log or wakeup log printers in a maintenance busy state. (See "Busyout and Release Commands" at the beginning of this chapter). When busied out, the link is dropped and no data transfer can take place over it.

This command can be used to prevent unwanted interference between different maintenance processes. Maintenance software may put a component that is part of a link in a busy state, causing link set-up to fail, and resulting in attempts by the system to reestablish the link. If a maintenance test requires that the component be idle, frequent attempts at re-setup may delay the recovery of a faulty component. Busying out the link will prevent re-setup attempts.

Parameters

pms-log Busies out the link to the Property Management System printer

wakeup-log Busies out the link to the Wakeup Log printer

Examples

busyout journal-printer pms-log
busyout journal-printer wakeup-log

For more information see the "Busyout and Release Commands", "Common Input Parameters", and the "Common Output Fields" sections at the beginning of this chapter.

Busyout Link

busyout link link#

The busyout link command puts a specified Packet Gateway link in a maintenance busy state. (See "Busyout and Release Commands" at the beginning of this chapter). A link may also be busied out with **busyout port** using the address of the PGATE port that supports the link.

CAUTION:
*Busyout of a link drops all calls and packet traffic dependent on that link. The application, adjunct, or switch connected to the link will be inaccessible and the link will have to be reestablished later when returned to service. See **status link** for more details on links.*

Parameters

Link# A number (1-16) assigned to the link on the Communication-Interface Links form.

For more information see the "Busyout and Release Commands", "Common Input Parameters", and the "Common Output Fields" sections at the beginning of this chapter.

Busyout MIS

busyout mis

The busyout MIS command puts a management information system in the maintenance busy state.

CAUTION:
Busyout of the MIS causes the Call Management System to lose data gathered during the busyout.

For more information see the "Busyout and Release Commands", "Common Input Parameters", and the "Common Output Fields" sections at the beginning of this chapter.

Busyout Modem-Pool

busyout modem-pool group# [/ member#]

The busyout modem-pool command puts the specified modem pool group or group member in a maintenance busy state (See "Busyout and Release Commands" at the beginning of this chapter). A single group member can be busied out by specifying the group and member numbers separated by a slash (/).

Parameters

group#	A number (1-63) assigned to the modem-pool group on the administration form.
Member #	A number (1-32) assigned to the modem-pool group member on the administration form. A modem pool group member is a pair of analog and digital line ports, or two pair for integrated modem pools.

Examples

busyout modem-pool 1
busyout modem-pool 4/3

For more information see the "Busyout and Release Commands", "Common Input Parameters", and the "Common Output Fields" sections at the beginning of this chapter.

Busyout PMS-Link

busyout pms-link

The busyout pms-link command puts a property management system link in the maintenance busy state.

This command can be used to prevent unwanted interference between different maintenance processes. Maintenance software may put a component that is part of a link in a busy state, causing link set-up to fail, and resulting in attempts by the system to reestablish the link. If a maintenance test requires that the component be idle, frequent attempts at re-setup may delay the recovery of a faulty component. Busying out the link will prevent re-setup attempts.

For more information see the "Busyout and Release Commands", "Common Input Parameters", and the "Common Output Fields" sections at the beginning of this chapter.

Busyout PNC-Standby

busyout pnc-standby

This command applies only to Critical Reliability systems (duplicated PNC). The busyout pnc-standby command will effectively remove from service the port network connectivity (PNC) that is currently standby. Duplicate call set-up on the standby PNC is discontinued but call processing proceeds normally on the active PNC. This command is useful for repairing Center Stage Switch components, fiber links, and Expansion Interfaces without disrupting service. Existing shadowed calls on the standby PNC are torn down, and PNC interchanges are prevented until the standby is released.

When the standby is released, a global network refresh is performed, the standby is brought into service, and interchanges are again allowed. Refresh time is a function of system traffic and can take several minutes. Any components of the standby PNC which have been busied out must first be released before release of the standby PNC is allowed.

Status pnc shows which PNC is currently active, whether the standby is busied out, and whether the standby has completed the global refresh.

NOTE:
On a system with duplicated PNC, synchronization may be provided over a combination of active and standby components. This condition is indicated by an OFF-BOARD WARNING alarm against TDM-CLK with error type 2305. Avoid busying out the standby under such circumstances. If possible, resolve the TDM-CLK alarm first.

When a busyout is performed, duplicated calls over the standby port network connectivity will be dropped and new ones are not established. (This is not destructive since calls on the active PNC are not affected).

When the standby port network connectivity is released, a global network refresh is performed, and all existing active calls will be duplicated to the standby port network connectivity. New calls will be set up on both PNCs, and interchanges are then allowed.

An ABORT will be returned any time a busyout is issued on port network connectivity that has already been busied out. The same is true for a release issued on pnc that is not busied out.

System resets of level 2 or higher release a previously busied out PNC from the busyout state.

The standby PNC must be busied out before fiber links, Expansion Interface (EI) circuit packs, Switch Node Interface (SNI) circuit packs, or DS1C circuit packs on the standby PNC can be busied out.

Output

Port This field displays A-PNC or B-PNC, indicating which of the duplicated PNCs was busied out.

For more information see the "Busyout and Release Commands", "Common Input Parameters", and the "Common Output Fields" sections at the beginning of this chapter.

Busyout Port

busyout port UUCSSpp

The busyout port command puts the specified port on a circuit pack in a maintenance busy state. (See "Busyout and Release Commands" at the beginning of this chapter).

Examples

busyout port 01c1101

For more information see the "Busyout and Release Commands", "Common Input Parameters", and the "Common Output Fields" sections at the beginning of this chapter.

Busyout PRI-Endpoint

busyout pri-endpoint extension

This command applies only to DEFINITY G3 V2 systems.

The busyout pri-endpoint command puts all B-channel ports associated with the specified PRI endpoint in a maintenance busy state. The release pri-endpoint command will return all B-channel ports associated with the specified PRI endpoint extension to operation. When released, the switch will attempt to negotiate with the far-end PRI terminal adapter to put each PRI endpoint port (B-channel) into in-service state. (See the general notes on maintenance busyout at the beginning of this chapter).

CAUTION:
This command is destructive. It will cause an active call on the PRI endpoint to drop.

Once the PRI endpoint is in the maintenance busy state, all call attempts from the far-end PRI terminal adapter will be denied with a cause value of 17 (User Busy).

Output

The following display shows a typical result when **busy pri 22501** is entered and port circuits 1 through 6 on the circuit pack in slot 01B are assigned to the B-channels for the PRI endpoint associated with extension 22501.

```
busyout pri-endpoint 22501                                  page 1 of 1

                              COMMAND RESULTS

  Port      Maintenance Name  Alt. Name     Result           Error Code

  01B2001   PE-BCHL           22501         PASS
  01B2002   PE-BCHL           22501         PASS
  01B2003   PE-BCHL           22501         PASS
  01B2004   PE-BCHL           22501         PASS
  01B2005   PE-BCHL           22501         PASS
  01B2006   PE-BCHL           22501         PASS


Command Successfully Completed
```

For more information, see the "Busyout and Release Commands", "Common Input Parameters", and the "Common Output Fields" sections at the beginning of this chapter.

Busyout SPE-Standby

busyout spe-standby

The busyout spe-standby command lowers the Software State Of Health of the standby Switch Processing Element (SPE) kept by the standby Duplication Interface (DUPINT) board to the lowest possible level above non-functional. This diminishes the chance that an interchange will occur, but does not guarantee that an interchange will not occur. This command also turns off memory shadowing. Periodic and scheduled testing *are not* turned off on busied out objects, but warning alarms with error 18 are generated.

Busyout of the standby SPE is allowed if communication to the standby is down (handshake failure), but the state of health may not be lowered. Use **status spe** to determine the condition of the SPE after the busyout has been entered.

When a busyout of the standby SPE is performed, the software state of health of the standby SPE is set to the lowest possible level and memory shadowing is turned off. This is done to lessen the probability that the system will switch to the standby SPE. However, in some cases a "spontaneous" (hard) interchange of the SPEs may still occur.

This command can be used as a mechanism to turn off memory shadowing of the standby SPE.

The busyout *will* execute even if the standby SPE state of health is less than "functional", memory shadowing is already off, or handshake communication with the standby is down.

For more information see the "Busyout and Release Commands", "Common Input Parameters", and the "Common Output Fields" sections at the beginning of this chapter.

Busyout SP-Link

busyout sp-link

The busyout sp-link command puts the system printer link into a maintenance busy state. Placing the system printer link in a busyout state prevents access to the system printer.

The system printer link is a link from the switch to an external printer over which jobs can be printed. This link is created by administering the system printer extension and setting up a call to the system printer.

For more information see the "Busyout and Release Commands", "Common Input Parameters", and the "Common Output Fields" sections at the beginning of this chapter.

Busyout Station

busyout station extension

The busyout station command puts a specified administered voice terminal extension (station) in a maintenance busy state, regardless of whether or not it is installed.

For more information see the "Busyout and Release Commands", "Common Input Parameters", and the "Common Output Fields" sections at the beginning of this chapter.

Busyout Tape

busyout tape C

The busyout tape command puts the tape into a maintenance busy state. (See "Busyout and Release Commands" at the beginning of this chapter). Placing the tape in a busyout state prevents read and write access of the tape except for that requested by demand maintenance testing.

This command will abort if the host adapter on the same carrier is already busied out.

When the host-adapter is busied out, only the demand maintenance busyout and test commands are permitted on the attached tape in the same carrier. Reset, release, scheduled and periodic testing and other system software access are blocked. In this case, the host-adapter must first be released before the tape can be released.

When the host-adapter is taken out-of-service due to maintenance test or reset failures, the tape is also placed in the uninstalled state and all access by system software, maintenance tests and commands, including reset, are blocked.

Parameters

C The cabinet is always **1** and need not be entered. On systems with duplicated SPEs only, the carrier, **a** or**b**, must be entered.

Examples

Simplex: **busyout tape**

Duplicated: **busyout tape a**

For more information see the "Busyout and Release Commands", "Common Input Parameters", and the "Common Output Fields" sections at the beginning of this chapter. This command will abort if any other MSS operation has already begun.

Busyout TDM

busyout tdm port-network PN# bus A | B

The busyout tdm command puts the specified tdm bus in a maintenance busy state. (See "Busyout and Release Commands" at the beginning of this chapter).

If a bus is busied out, no calls will be torn down. However, no new calls will be set up on the busied out bus.

Dedicated tone time slots must be moved to the other half of the TDM bus pair before a busyout of a particular bus is allowed.

Dedicated tone time slots and the control channel can be moved onto one of the two TDM bus pairs with **set tdm**.

Parameters

PN# The port network number of the TDM bus to be busied out.

bus The TDM bus ("a" or "b") specifies which of the paired TDM busses is to be busied out. Each 512 time slot TDM bus is configured as a pair of 256 time slot buses. This division allows for duplication of control channels and dedicated tone time slots. On power-up, the default control bus (carrying the control channel) is the "a" bus; the default tone bus (carrying dedicated tones) is the "b" bus.

Example

busyout tdm port-network 3 bus a

For more information see the "Busyout and Release Commands", "Common Input Parameters", and the "Common Output Fields" sections at the beginning of this chapter.

Busyout Tone-Clock

busyout tone-clock UUC

The busyout tone-clock command puts the specified tone/clock circuit pack and its associated maintenance objects in a maintenance busy state. (See "Busyout and Release Commands" beginning of this chapter).

In a port network with duplicated ton-clock circuit packs, busyout of the active tone-clock is not allowed. To busy out a tone-clock that is active, it must first be interchanged with the standby by **set tone-clock** UUC.

Parameters

UUC The cabinet/carrier location of the tone-clock circuit pack. Cabinet defaults to 1.

For more information see the "Busyout and Release Commands", "Common Input Parameters", and the "Common Output Fields" sections at the beginning of this chapter.

Busyout Trunk

busyout trunk group# [/member#]

The busyout trunk command puts an entire trunk group or a single trunk group member in a maintenance busy state whether it is installed or not. Entering only the group number busies out all members in the group. (Although not recommended, entering a group number and a slash (/) without a member number busies out the member with the lowest-numbered port location.)

Examples

busyout trunk 78
busyout trunk 78/1

For more information see the "Busyout and Release Commands", "Common Input Parameters", and the "Common Output Fields" sections at the beginning of this chapter.

Cancel Hardware-Group

cancel hardware-group

In the course of executing **test hardware-group**, you may find it necessary to halt the test temporarily or permanently. This can be accomplished with **cancel hardware-group**. The canceled **test hardware-group** command may be restarted where it left off with **resume hardware-group**, or another test hardware-group test may be started. In addition to the cancel hardware-group command, pressing CANCEL will cancel a hardware-group test executing in the foreground.

The status of a canceled test hardware-group command will show up as ‘‘canceled’’ on the ‘‘status hardware-group’’ screen.

When a hardware-group test is executing in the foreground with the ‘‘continuously’’ option and CANCEL is pressed or the cancel hardware-group is entered, then the hardware-group test is canceled and for security reasons, the G3-MT running the hardware-group test will be logged off. However, after logging back on the system, you can still restart the canceled hardware-group test command with resume hardware-group command.

Scheduled and Periodic Maintenance

When a "test hardware-group" is entered, all activity related to scheduled background maintenance, periodic background maintenance, and data audits is suspended for the duration of the execution of the "test hardware-group"

command. All activity related to scheduled background maintenance, periodic background maintenance, and data audits will restart if the "test hardware-group" command is canceled.

Status Hardware-Group

The state of a canceled "test hardware-group" command can be displayed by means of the "status hardware-group" command and the state will show up as canceled.

All Ports Option

When **test hardware-group all-ports** is canceled, the internally generated port translations for ports that are otherwise untranslated are removed. If **resume hardware-group** is then entered, only customer-administered ports will subsequently be tested. **resume** does *not* reinstate the port translations that were removed by the **cancel**.

Output

If a "test hardware-group" command executing in the background is successfully canceled with the "cancel hardware-group" command, the following response will be displayed:

```
Hardware-group command successfully canceled
```

If a "test hardware-group" command executing in the foreground is successfully canceled with a "cancel hardware-group" command from another terminal, the following response will be displayed on the terminal where the hardware-group command was executing:

```
Hardware-group command aborted with cancel command entered
from another terminal
```

Change Circuit-Packs

change circuit-packs UU

This command allows the user to administratively add, change or remove circuit packs that are to be inserted into port, expansion control, and switch node carriers. It is used to configure the system when the circuit packs have not yet been physically inserted. This command does *not* support displaying or modifying the boards in the PPN control carrier.

Parameters

UU The number of the cabinet containing the circuit packs to be modified. The default is 1.

Output

An input form is displayed containing the following fields:

Cabinet	The administered number of the cabinet (1-22).
Cabinet Layout	Type of cabinet (five-carrier or single-carrier-stack).
Carrier	Each page of this form reports the information for one carrier. This field indicates the letter designation of the carrier displayed on the current page.
Carrier Type	The function of the carrier: (port, processor, switch-node, dup-switch-node, or not-used).
Slot	The carrier slot numbers (00 - 21).
Code	The TN or UN part number of the circuit pack. This number identifies the circuit pack type to system software.
Sfx	The letter suffix of the circuit pack, if applicable.
Name	The name of the circuit pack. This field aids in entering the circuit pack codes.

The following display shows a typical result when **change circuit-packs 1**is entered on a system with simplex SPE and a Center Stage Switch (cabinet 1 is always five-carrier).

```
change circuit-packs 1                                  Page   1 of   5
                              CIRCUIT PACKS

        Cabinet: 1                              Carrier: A
 Cabinet Layout: five-carrier            Carrier Type: processor





      *** PROCESSOR BOARDS NOT ADMINISTERABLE IN THIS SCREEN ***
```

```
change circuit-packs 1                                Page   2 of   5
                                CIRCUIT PACKS

        Cabinet: 1                                Carrier: B
 Cabinet Layout: five-carrier              Carrier Type: not-used

 Slot Code  Sfx  Name                      Slot Code  Sfx  Name
  00:                                       11:
  01:                                       12:
  02:                                       13:
  03:                                       14:
  04:                                       15:
  05:                                       16:
  06:                                       17:
  07:                                       18:
  08:                                       19:
  09:                                       20:
  10:                                       21:

  '#' indicates circuit pack conflict.
```

```
change circuit-packs 1                                Page   3 of   5
                                CIRCUIT PACKS

        Cabinet: 1                                Carrier: C
 Cabinet Layout: five-carrier              Carrier Type: port

 Slot Code  Sfx  Name                      Slot Code  Sfx  Name
  00:                                       11: TN754      DIGITAL LINE
  01: TN748  C   TONE DETECTOR              12: TN753      DID TRUNK
  02:                                       13: TN742      ANALOG LINE
  03:                                       14: TN760  C   TIE TRUNK
  04: TN771  C   MAINTENANCE/TEST           15: TN747  B   CO TRUNK
  05: TN748  B   TONE DETECTOR              16: TN742      ANALOG LINE
  06: TN767      DS1 INTERFACE              17: TN556      BRI LINE
  07: TN742      ANALOG LINE                18: TN742      ANALOG LINE
  08: TN762  B   HYBRID LINE                19:
  09: TN742      ANALOG LINE                20: TN754      DIGITAL LINE
  10:

  '#' indicates circuit pack conflict.
```

```
change circuit-packs 1                                  Page   4 of   5
                              CIRCUIT PACKS

        Cabinet: 1                              Carrier: D
 Cabinet Layout: five-carrier            Carrier Type: port

 Slot Code  Sfx  Name                    Slot Code  Sfx  Name
  00:                                     11:
  01:                                     12: TN722  B   DS1 TIE TRUNK
  02:                                     13: TN760  C   TIE TRUNK
  03: TN750  B   ANNOUNCEMENT             14:
  04:                                     15: TN754      DIGITAL LINE
  05:                                     16:
  06:                                     17: TN742      ANALOG LINE
  07: TN747  B   CO TRUNK                 18:
  08: TN753      DID TRUNK                19:
  09: TN742      ANALOG LINE              20:
  10:                                     21:

  '#' indicates circuit pack conflict.
```

```
change circuit-packs 1                                  Page   5 of   5
                              CIRCUIT PACKS

        Cabinet: 1                              Carrier: E
 Cabinet Layout: five-carrier            Carrier Type: switch-node

 Slot Code  Sfx  Name                    Slot Code  Sfx  Name
                                          11:
  01: TN570      EXPANSION INTF           12:
  02: TN573      SWITCH NODE INTF         13:
  03: TN573      SWITCH NODE INTF         14:
  04:                                     15:
  05:                                     16:
  06:                                     17:
  07:                                     18:
  08:                                     19: TN573     SWITCH NODE INTF
  09:                                     20: TN573     SWITCH NODE INTF
  10: TN572      SWITCH NODE CLOCK        21:

  '#' indicates circuit pack conflict.
```

Change Fiber-Link

change fiber-link fiber#

The change fiber-link command changes the translation data associated with an existing fiber link. On Critical Reliability systems (duplicated PNC), each fiber link is duplicated and exists as a pair. For more information about fiber links, see FIBER-LNK in Chapter 9, "Maintenance Object Repair Procedures". For more information about PNC duplication and administration, see PNC-DUP in Chapter 9, "Maintenance Object Repair Procedures".

When PNC duplication is enabled, only the fields on pages 2 and 3 (the DS1C complex attributes, if any) can be changed.

Translation data is not changed until the "ENTER" key is pressed. Pressing Cancel any time before pressing Enter to enter the changes returns you to the command line without changing any translation data.

Whenever you enter a command that changes translation data, two checks are made:

- You must have permission to administer the feature.
- No other user may be executing a **change, add**, or **remove fiber-link**command.

On a simplex PNC or fully operational duplex PNC, you must remove a fiber and add it again to change the endpoint board locations.

Parameters

number — The administered number (1-27) associated with a fiber link or, on a duplicated PNC, with a fiber link pair.

Examples

change fiber-link 21

Output

Fiber Link #	This display-only field shows the identifying number of the fiber link entered on the command line.
Board Location	The physical address (cabinet-carrier-slot) of the circuit packs comprising the two endpoints (ENDPOINT-1 and ENDPOINT-2) of the fiber link.
Board Type	This display-only field shows the type of circuit pack administered at each endpoint ("ei" or "sni").
DS1 Converter?	**y** indicates that a DS1C Converter Complex is used on this link to remotely locate a port network. If this is the case, a second page will be displayed for administration of the DS1C Complex attributes.

The following fields appear on Page 2 when a DS1C Complex is administered on the fiber link. Only the DS1C Complex *attributes* are administered here. The circuit pack itself is administered via **change circuit pack**. Entries on Page 2 represent the A-PNC. If the PNC is duplicated, these fields are repeated on Page 3 for the B-PNC. Page 3 fields are display-only, and can be changed only by changing their counterpoints on Page 2.

Board Location	This field under the heading DS1C-1 is used to define the physical location of the converter board connected to ENDPOINT-1. It is a data entry field consisting of the board's physical address by cabinet-carrier-slot. When the location is entered, validation is performed to ensure that the board has been administered and is of the correct type (DS1C).
DS1 Converter Facilities	The fields under this heading define attributes of the four DS1 facilities (A, B, C, D) that can be connected to the DS1C.
Facility Installed?	This specifies (**y** or **n**) whether the indicated facility has been provided and installed. Facility A is required for the DS1C Complex.

Passes Far-end Clock?	This specifies whether the DS1C can use the timing of the received signal as a clock source (as when passing timing from a master PN to a slave PN. If the DS1 signal does not come directly from the far-end DS1C board or the network, **n** should be entered. (For example, when using a 'combined' facility in which the signal is converted from digital to analog and back to digital.)
Digital Data Compatible?	This specifies whether the facility is suitable for transmission of digital data. Facility A must be so and this field cannot be changed. If Customer Premises Equipment that alters digital data exists on this facility (for example, a channel expansion multiplexer or a combined DS1 facility), **n** should be entered. (Thus, a multiplexer cannot be installed on facility A).
DS1C-1 Line Compensation	This specifies the type of line compensation or line equalization for each facility of the DS1C connected to ENDPOINT-1. Valid entries are **1** to **5**. Meanings of these entries are shown in Table 8-4 below.

Table 8-4. DS1 Line Equalization Settings

Equalizer Setting	Distance to DSX-1 Interface (feet)	
	22 AWG ABAM & 24 AWG PDS	26 AWG PDS
1	1 to 133	0 to 90
2	133 to 266	90 to 180
3	266 to 399	180 to 270
4	399 to 533	270 to 360
5	533 to 655	360 to 450

The line equalization setting will default to the median value of 3. This setting will remain in effect until changed by administration. Incorrect equalizer settings may cause a higher error rate on the DS1 facility.

DS1C-2 Line Compensation: Same as the above for ENDPOINT-2 of the DS1C Complex.

Zero Code Suppression: This specifies the line coding format for each facility. Valid entries are: **zcs** and **b8zs**. There are 2 line coding options supported by the DS1 Interfaces to meet ones-density requirements in the data stream. Zero Code Suppression (ZCS) line coding is the default and will be in place following an initialization until changed by administration. Note that either line coding option may be used on the DS1 Interface that carries the packet time slots.

Framing Mode: Specifies the data framing format (**esf** or **d4**) used on the facility. It is initialized to ESF. In this mode, an automatic selection process is executed until either the DS1 Interface is brought into frame, or an Options CCMS message is received by the framing options master. Once options are set by administration, they remain fixed on the framing option master until the board is again initialized, reset, or sent new options. The framing option on the framing option slave Converter Board can change to track the framing option master's option.

The following display shows a typical result when **change fiber-link 1**is entered on a system with simplex PNC and Center Stage Switch.

```
change fiber-link 1                          Page   1 of   1

                     FIBER LINK ADMINISTRATION

Fiber Link #: 1

     ENDPOINT-1                                ENDPOINT-2
      (A-PNC)                                   (A-PNC)

  Board Location: 01E01                    Board Location: 01E02
     Board Type: ei                           Board Type: sni









Is one endpoint remoted via DS1 Converter Complex? n
```

The following display shows a typical result when **change fiber-link 5** is entered on a system with duplicated PNC, a Center Stage Switch and DS1 Converter Complex. The output consists of three pages.

```
change fiber-link 5                      Page   1 of   3   SPE A

                 FIBER LINK ADMINISTRATION

Fiber Link #: 5

        ENDPOINT-1                                ENDPOINT-2
          (A-PNC)                                   (A-PNC)

   Board Location: 05A01                    Board Location: 02E03
       Board Type: ei                           Board Type: sni


        ENDPOINT-1                                ENDPOINT-2
         (B-PNC)                                   (B-PNC)

      Board Location: 05B02                    Board Location: 02D03
        Board Type: ei                           Board Type: sni



Is one endpoint remoted via DS1 Converter Complex? y
```

```
change fiber-link 5              Page   2 of   3   SPE A

                  FIBER LINK ADMINISTRATION
            A-PNC DS1 CONVERTER (DS1C) ATTRIBUTES


DS1C-1
Board Location: 05A02      DS1 CONVERTER
                             FACILITIES

                           A    B    C    D
      Facility Installed?  y    y    y    n
    Passes Far-end Clock?  y    y    y    y
 Digital Data Compatible?  y    y    y    y
DS1C-1 Line Compensation:  1    1    1    1
DS1C-2 Line Compensation:  1    1    1    1
   Zero Code Suppression: b8zs zcs  zcs  zcs
            Framing Mode: esf  esf  esf  esf


DS1C-2
Board Location: 02E01
```

```
change fiber-link 5           Page   3 of   3   SPE A

              FIBER LINK ADMINISTRATION
        B-PNC DS1 CONVERTER (DS1C) ATTRIBUTES


DS1C-1
Board Location: 05B03      DS1 CONVERTER
                             FACILITIES

                           A    B    C    D
      Facility Installed?  y    y    y    n
    Passes Far-end Clock?  y    y    y    y
 Digital Data Compatible?  y    y    y    y
DS1C-1 Line Compensation:  1    1    1    1
DS1C-2 Line Compensation:  1    1    1    1
   Zero Code Suppression: zcs  zcs  zcs  zcs
            Framing Mode: esf  esf  esf  esf


DS1C-2
Board Location: 02D01
```

Change Synchronization

change synchronization

This command sets the source and type of timing signals to be used by the system.

The system uses a hierarchy of timing sources to synchronize data transmission throughout the system. Stratum 3 Synchronization uses an external Stratum 3 Clock connected to a port network (usually the PPN) which has a TN780 Tone-Clock circuit pack. Stratum 4 Synchronization uses either external signals received through a DS1 interface circuit pack or a master Tone-Clock within the system. (Throughout this discussion, the term DS1 interface includes TN464 UDS1 circuit packs.)

A DS1 interface administered as a primary or secondary synchronization source cannot be removed on the DS1 circuit pack form or the regular circuit pack form. The synchronization must first be changed or removed.

Output

Stratum: This field specifies the stratum number, 3 or 4, of the synchronization source used by the system. The stratum number determines which other fields are displayed on the screen form.

Stratum 4 Fields

Primary: The location of the DS1 Interface circuit pack that provides the preferred source of timing reference signals. A blank indicates that no external timing source is used.

Secondary: The location of the DS1 Interface circuit pack that provides the backup source of timing reference signals to be used if the primary source fails. It must be in the same port network as the primary source. A blank indicates that no backup external timing source is used.

Location: The locations of all administered DS1 circuit packs in the system.

Name: The user-defined name, if any, administered on the DS1 circuit pack form.

Slip: This field indicates whether there are any slip alarms logged against the circuit pack.

Stratum 3 Fields

Port Network: This display-only field gives the number of the port network connected to the Stratum 3 clock (normally 1, the PPN).

The following display shows a typical result when **change synch**is entered with stratum 4 synchronization in use

.

```
display synchronization

          SYNCHRONIZATION SOURCE (DS1 circuit pack location)

                    Stratum: 4
                    Primary: 02B10        Secondary:02B11

                       DS1 CIRCUIT PACKS

Location  Name       Slip         Location    Name      Slip
02B10     Networka    n
02B11     Networkb    n
01C10     G3i-yard    n
01C11     Sys75-rmt   n




NOTE: TN722B DS1 sources result in stratum 4, type II synchronization
```

The following display shows a typical result when **change synch** is entered with stratum 3 synchronization in use.

```
change synchronization                     Page   1 of   1   SPE A

                       SYNCHRONIZATION PLAN

            SYNCHRONIZATION SOURCE (DS1 circuit pack location)

                    Stratum: 3
                Port Network: 1
```

Change System-Parameters Maintenance

change system-parameters maintenance

The maintenance-related system parameters form is used to specify and display scheduled maintenance operations and maintenance support functions.

This form can also be used to activate and deactivate INADS alarm origination when performing repairs. To deactivate alarm origination:

1. Make a note of the current entries in the Cleared Alarm Notification, CPE Alarm, and Alarm Origination Activated fields so you can restore them when you are done.

2. If Cleared Alarm Notification field = ‘‘y,’’ change it to ‘‘n.’’
3. If Alarm Origination Activated field = ‘‘y,’’ change it to ‘‘n.’’
4. If CPE Alarm Activation Level field is ‘‘major,’’ ‘‘minor,’’ or ‘‘warning,’’ change to ‘‘none.’’
5. If daily scheduled maintenance must be prevented from starting during a maintenance procedure, set the `Start Time` field to a time after the session will end. If daily Scheduled Maintenance is already running and needs to be shut off, set the `Stop Time` field to one minute after the current time.
6. Press ENTER and verify that the screen displays the message:

   `command successfully completed`

NOTE:
When finished working on the switch be sure to return all fields to their original settings.

EXAMPLES

change system-parameters maintenance

Output

An input form is displayed with the following fields. Defaults for data entry fields are listed in parentheses.

Operations Support Parameters

Product Identification	This is a 10-digit number starting with 1 that identifies the switch to an Operations Support System (OSS), for example, INADS.
OSS Telephone Number	The telephone number that the switch uses to call INADS for alarm origination. The number must be obtained from the National Customer Support Center (NCSC) or the TSC. # and ***** are not allowed in the telephone number.
Alarm Origination Activated	Indicates whether alarm origination is activated or not. If ‘‘yes,’’ all Major and Minor alarms result in an automatic call to INADS. If ‘‘no,’’ alarm origination does not take place. Warning alarms are not reported to INADS. (no)
Cleared Alarm Notification	Enables the switch to originate a call to the OSS and send an alarm resolution message whenever all previously reported Major and Minor alarms are resolved. Alarm Origination must be activated in order for Cleared Alarm Notification to work. (no)
Restart Notification	Enables the switch to originate a call to the OSS and report any system restarts caused by problems with the switch.
Test Remote Access Port	Specifies whether testing of the remote access port on the SYSAM circuit pack is enabled. This field should be set to "yes" whenever there is an INADS line connected to the switch and there is a maintenance contract in effect so that alarm origination capability is maintained. If no equipment is connected to the remote access port, or if a trunk for remote access and alarm origination is not provided, running tests on the remote access port on the SYSAM results in test failures. This causes unnecessary maintenance alarms and allows potentially destructive tests to be run. Setting this field to "no" prevents this. (no)
CPE Alarm Activation Level	Indicates the minimum level (Major, Minor or Warning) at which the Customer-Provided Equipment (CPE) alarm is activated. If the level is ‘‘none,’’ the CPE does is not activated for any alarm. (none) **NOTE:** The CPE alarm is always activated when the switch goes into Emergency Transfer, regardless of the CPE Alarm Activation Level setting.
Customer Access to INADS Port	Provides the capability to prohibit access to system administration and maintenance interface, via the INADS port when using customer login ID’s. This field can only be activated by AT&T services through system-parameters maintenance administration.(no)

Scheduled Maintenance

A series of maintenance tests and operations runs automatically every day according to the schedule and settings specified in the following fields

Table 8-5. TEST #161 Loop Around Test

Start Time	The hour and minute in 24-hour notation at which daily scheduled maintenance will begin running. (22:00)
Stop Time	The hour and minute when scheduled daily maintenance will stop running. If any daily maintenance operations are not completed by this time, the system will note where in the sequence it stopped and perform those operations during the next scheduled daily maintenance.
Daily Maintenance	This display-only field simply represents the series of tests that are always run by maintenance software as part of daily maintenance.
Save Translation	This field indicates on which days translation data in memory will automatically be saved to the Mass Storage System disk and/or tape devices during scheduled maintenance. The save operation is first made to disk, followed by a disk backup to tape. On systems with duplicated SPEs, translation data is saved on both SPEs. Valid entries are **daily**, days of the week, or **no**. "No" specifies that no automatic saves are to be executed. (daily)
Control Channel Interchange	Each port network has a pair of TDM busses called A and B, each of which has a set of time slots dedicated to use by the control channel. At any one time, the control channel in each PN is carried on only one of the two busses. This field indicates on which days the control channel in each port network will be switched from one of the paired TDM busses to the other. Valid entries are **daily**, days of the week, or **no**. "No" specifies that no interchange be executed. (no)

Continued on next page

Table 8-5. TEST #161 Loop Around Test — *Continued*

System Clocks Interchange	On High and Critical Reliability systems, this option causes a Tone-Clock interchange in each port network with duplicated Tone-Clock circuit packs. Each port network interchanges into the standby Tone-Clock for 20 seconds and then back to the Tone-Clock that was originally active. This field indicates on which days the interchanges are to take place. Valid entries are daily, days of the week, or no. "No" specifies that interchanges be executed. (no) The system performs a Tone-Clock interchange, making the stand by Tone-Clock active. The newly active Tone-Clock circuit pack is tested and, while active, provides system clocks for the port network in which it resides. The system then interchanges back to the originally active Tone-Clock circuit pack.
SPE Interchange	On systems with duplicated SPEs, this field indicates on which days an SPE interchange will be executed during scheduled maintenance. Valid entries are **daily**, days of the week, or **no**. "No" specifies no scheduled interchanges. (no)
Minimum Threshold for TTRs	When the number of touch tone receivers (TTRs) in service falls below this number (4 to 200), a WARNING alarm is raised against TTR-LEV (see TTR-LEV in Chapter 9, "Maintenance Object Repair Procedures"). These are also known as dual-tone multifrequency receivers (DTMRs). There are 4 TTRs on each TN748 Tone Detector circuit pack, and up to 50 TN748s in a system. To alarm the first occurrence of a TTR being taken out of service, set this field to 4 times the number of TN748s. If this number is set to more than three less than the total number of TTRs, a port network with only one TN748 could lose all of its TTRs before this alarm is raised.

Continued on next page

Table 8-5. TEST #161 Loop Around Test — *Continued*

Minimum Threshold for CPTRs	When the number of call progress tone receivers in service falls below this number (2 to 100), a WARNING alarm is raised against TTR-LEV (see TTR-LEV in Chapter 9, "Maintenance Object Repair Procedures"). These are also known as general purpose tone detectors (GPTDs). There are 2 CPTRs on each TN748 Tone Detector circuit pack, and up to 50 TN748s in a system. To alarm the first occurrence of a CPTR being taken out of service, set this field to 2 times the number of TN748s. If this number is set to more than one less than the total number of TTRs, a port network with only one TN748 could lose all of its CPTRs before this alarm is raised.
Minimum Threshold for Call Classifier Ports	When the number of call classifier ports (CLSFY-PTs) in service falls below this number, a WARNING alarm is raised against TTR-LEV (see TTR-LEV in Chapter 9, "Maintenance Object Repair Procedures"). Valid entries are 1 to 200. There are 8 ports on each TN744 Call Classifier circuit pack, and up to 25 TN744s in a system. To alarm the first occurrence of a CLSFY-PT being taken out of service, set this field to 8 times the number of TN744s. If this number is set to more than 7 less than the total number of CSLFY-PTs in the system, a port network with only one TN744 could lose all of its CLSFY-PTS before the alarm is raised. If there are no TN744s in the system, leave this field blank.

Continued on next page

Table 8-5. TEST #161 Loop Around Test — *Continued*

Test Type 100, Test Type 102, Test Type 105	An extension assigned to receive tie-trunk calls from other switches with test line origination capability. The system responds by sending a sequence of test tones. Test Type 100 tests far end to near end loss and C-message by sending: ■ 5.5 seconds of 1004 Hz tone at 0dB ■ Quiet until disconnect; disconnect is forced after one minute Test Type 102 tests far end to near end loss by sending: ■ 9 seconds of 1004 Hz tone at 0dB ■ 1 second of quiet ■ This cycle is repeated until disconnect; disconnect is forced after 24 hours. Test Type 105 tests 2-way loss, gain slope, and C-message and C-notch noise by sending: ■ nine seconds of 1004 Hz at -16dB ■ one second of quiet ■ nine seconds of 404 Hz at -16dB ■ one second of quiet ■ nine seconds of 2804 Hz at -16dB ■ 30 seconds of quiet ■ one half second of Test Progress Tone (2225 Hz) ■ approximately five seconds of quiet ■ forced disconnect
ISDN-PRI Test Call Extension	The extension used by a far-end ISDN node to place a call to the system to test the ISDN-PRI trunks between the far-end and the system.

Continued on next page

Table 8-5. TEST #161 Loop Around Test — *Continued*

ISDN-BRI Service SPID	This field shows whether or not the link is associated with the Service SPID. If the link is associated with the Service SPID, the field contains a number from “0 to 99999’’ this number is the test spid (See *SPID Facility Test* in Chapter 9, "Maintenance Object Repair Procedures", under *BRI-SET* MO) otherwise, this field is blank. Service SPID is a feature used by the system technician to check building wiring between the switch and the BRI endpoint.
DSO Loop-Around Test Call Extension	The extension used by the network service provider to set up a DSO loop around connection for testing non ISDN DS1 trunks The DSO Loop-Around Test Call feature is used primarily for testing DSO channels associated with non ISDN-PRI trunks. The loop-around is activated by dialing the test extension number. Multiple DSO Loop-Around connections can be set up by placing multiple calls to the loop-around extension. For more information see "Facility Test Calls" on page 6-10 in Chapter 6, "Additional Maintenance Procedures".
Loss Plan	Use only when extra loss is required to maintain quality of transmission on conference calls. Leave this field blank if no extra loss is required. If extra loss is required, enter digits as shown below.

No. Of Parties To Be Conferenced	Enter Digit
3	2
4	3
5	4
6	5
7	6

SPE Optional Boards: These fields indicate whether a Disk circuit pack is present in the system, and which Packet Interface slots are administered. If a Packet Interface circuit pack is physically present, the corresponding Packet Interface field is set to y when the system boots, and no change to that field is allowed. If the system is equipped with duplicated SPEs, a Packet Interface field is set to y when either SPE carrier contains a Packet Interface circuit pack in the corresponding position. If a Packet Interface circuit pack is not present, then the value for the Packet Interface field is read from translation data stored on disk or tape. If the field is set to n, a Packet Interface circuit pack may be administered by changing the corresponding Packet Interface field to y.

The following display shows a typical result when change **system-parameters maintenance is** entered.

```
change system-parameters maintenance       Page 1 of 2


MAINTENANCE-RELATED  SYSTEM PARAMETERS


OPERATIONS SUPPORT PARAMETERS

        Product Identification: 123456789
          OSS Telephone Number: 555-5555
   Alarm Origination Activated? y
    Cleared Alarm Notification? y
          Restart Notification? y
       Test Remote Access Port? y
    CPE Alarm Activation Level: none
Customer Access to INADS Port?  n

SCHEDULED MAINTENANCE

                  Start Time: 01 : 00    Stop Time: 04 : 00
           Daily Maintenance: daily
            Save Translation: daily
 Control Channel Interchange: no__
   System Clocks Interchange: no__
             SPE Interchange: no__
```

```
  change system-parameters maintenance           Page 2 of 2

          MAINTENANCE-RELATED SYSTEM PARAMETERS

MAINTENANCE THRESHOLDS ( Before Notification )
  Minimum Threshold for TTRs: 4    Minimum Threshold for CPTRs: 1
  Minimum Threshold for Call Classifier Ports: _

TERMINATING TRUNK TRANSMISSION TEST (Extension)
  Test Type 100:        Test Type 102:         Test Type 105:

ISDN MAINTENANCE
   ISDN-PRI TEST CALL Extension: _____   ISDN BRI Service SPID: _____

DS1 MAINTENANCE
   DSO Loop-Around Test Call Extension: _____

LOSS PLAN (Leave Blank if no Extra Loss is Required)
   Minimum Number of Parties in a Conference Before Adding Extra Loss: _____

SPE OPTIONAL BOARDS
 Disk? y   Packet Intf1? y   Packet Intf2? n     Packet Intf3? n
```

Clear Errors

clear errors

The clear errors command moves all errors and resolved alarms to the cleared errors list, thereby making room for new incoming error messages which might otherwise be dropped. This command does not clear active alarms from the alarm log. Cleared error entries are the first entries overwritten when additional room is needed to log new entries. To retrieve cleared errors, use **display errors clear**.

NOTE:
Use this command with care. Cleared data will be lost if the logs fill up. (On G3i systems, cleared errors cannot be retrieved.)

Clear Firmware-Counters

clear firmware-counters UUCSS | a-pnc | b-pnc

This command clears the firmware error counters on the specified circuit packs(s). This command is valid only for SNI, SNC, and DS1C board locations. When a- or b-pnc is specified, all such circuit packs in a single PNC can be cleared at once. On a Critical Reliability systems (duplicated PNC), only circuit packs on a standby PNC that is busied out can be cleared.

This command is useful for quickly clearing lingering alarms after a hardware problem has been fixed. (**Test clear** commands do not clear alarms on SNI, SNC, and DS1C circuit packs.)

WARNING:
This command can mask actual hardware problems since firmware is cleared and appears as if no problems were ever encountered.

Parameters

UUCSS — The specified location must be occupied by an SNI, SNC or DS1C circuit pack. All circuit packs on the standby PNC can be cleared at once by specifying a- or b-pnc. To do so, the standby PNC must first be busied out.

For more information see "Common Output Fields" at the beginning of this chapter.

Clear ISDN-Testcall

clear isdn-testcall group# /member#

The clear isdn-testcall command cancels an ISDN-PRI test call if one is currently in progress. Once a running test call is cleared, another test call can be started. The trunk on which the test call is running must be specified by group and member number.

For more information see the "Common Input Parameters" and the "Common Output Fields" sections at the beginning of this chapter.

Clear Link

clear link link#

The clear link command resets the link and clears all firmware counters on the associated circuit pack.

Parameters

link# Number (1-16) assigned to the link via the Communication-Interface Links form

Clear PGATE-Port

clear pgate-port UUCSSpp

The clear pgate-port command clears the hardware error counters associated with the specified packet gateway port by performing a reset. If the number of the link assigned to the port is known, **clear link** accomplishes the same thing.

For more information see the "Common Input Parameters" and the "Common Output Fields" sections at the beginning of this chapter.

Clear Pkt

clear pkt port-network PN#

This command sends a ‘‘packet bus cleared’’ message to all circuit packs that connect to the packet bus in a specified port network. It is useful in quickly returning packet endpoints to service after a packet bus fault has been resolved.

When a fault causes a port network’s packet bus to be taken out of service, the packet circuit packs on that bus will not try to access it again until they are instructed by the SPE to resume activity. When a packet bus fault is cleared, the SPE automatically tells all affected circuit packs and their endpoints to return to service. However, that process may proceed slowly if there are many packet endpoints in the port network because the SPE sends return-to-service instructions to only one endpoint at a time. **Clear packet** causes the SPE to immediately instruct all affected endpoints to resume service.

In other cases, a packet bus may experience a temporary fault that effectively takes some packet endpoints out of service but does not persist long enough to take the bus out of service. In such a case. **clear packet** will quickly restore service to those endpoints.

Clear Port

clear port UUCSSpp

This command is used in conjunction with the "mark port" command. This command will remove the mark from the port and return it to service.

Disable Administered-Connection

disable administered-connection [adm-conn# | all

This command inhibits performance of scheduled and periodic testing on a specified administered connection (AC) or all ACs. Processing of in-line errors for the AC is also prevented. These commands can be useful in isolating results of certain maintenance processes by preventing interference from others.

Parameters

adm-conn#	The number (1-128) of the administered connection as assigned during administration.
all	This qualifier causes all ACs in the system to be disabled.

Disable Synchronization-Switch

disable synchronization-switch

The disable synchronization command prevents maintenance software from switching synchronization sources. (See SYNCH in Chapter 9, "Maintenance Object Repair Procedures" for details.)

CAUTION:
By preventing the system from switching away from a faulty synchronization source, service may be disrupted. If service is maintained, errors, slips and data transfer losses may occur.

Display Events

display events [print]

A vector event is the occurrence of something unexpected during a vector-routed call due to resource exhaustion or faulty vector programming. (For example, route-step failures are typically due to the programming of an invalid extension.) These types of failures are not due to faulty hardware or system software error and do not constitute incorrect feature operation. This command allows you to diagnose and correct vectoring problems due to the above-mentioned causes. See *DEFINITY Communications System Generic 3 Call Vectoring and Expert Agent Selection (EAS) Guide*, 555-230-520, for information on how to interpret this report.

Input Form

The following entry form is displayed to allow limiting the report to events of a certain type or from a certain time period. Enter the desired parameters and press ENTER.

Category	"Vector" specifies the type of event report to display and is the only valid entry.
Report Period	The fields in this section allow you to view only those vector events that occurred within a specific time period. If these are left blank, all vector events recorded are displayed.
Interval:	This field specifies a display of all events within the last time period of the type Enter the first letter of one of the following selections: *a*ll, *m*onth, *d*ay, *h*our, *m*inute.
Start/Stop Time	The starting and ending times, in 24-hour notation, of the interval to be reported.
Vector Number	The number of the vector (1-256) for which events will be reported. If this field is left blank, events for all vectors will be reported.
Event Type	Specific types of vector events are associated with numbers from 50000 to 50999. Entering one of these numbers will limit the report to events of this type. If this field is left blank, events for all types of vectors will be reported.

Output

See *DEFINITY Communications System Generic 3 Call Vectoring and Expert Agent Selection (EAS) Guide*, 555-230-520, for more information on how to interpret this report. In particular, the Event Data 2 field will be associated with possible causes and repair strategies for the event.

Event Type	A number from 50000 to 50999 that identifies what type of vector event occurred.
Event Description	A text string describing the event.
Event Data 1	If in the format *number*/*number* such as ''200/10'', this indicates the vector number and step number associated with the event. If in the format "Split *number*'' such as "Split 2'', this indicates the split number.
Event Data 2	Additional data concerning the event encoded as a hex number.
First Occur	The date and time when the vector event first occurred.
Last Occur	The date and time when the vector event last occurred.
Evnt Cnt	The total number of times, up to 255, that vector events of this type have occurred.

The following example shows the input form for **display events**:

```
display events                                Page  1 of  1   SPE B

                         EVENT REPORT

  The following options control which events will be displayed.

         EVENT CATEGORY

            Category: vector

         REPORT PERIOD

            Interval: _a_    From: __/__/__:__ To: __/__/__:__


         SEARCH OPTIONS

                           Vector Number: ___
                              Event Type: _____
```

The following example shows a typical vector event report.

```
display events                                    Page  1   SPE B


                        EVENTS REPORT

Event Event                  Event    Event   First     Last     Evnt
Type  Description            Data 1   Data 2  Occur     Occur     Cnt


50020 Call not queued        256/5     B   09/28/13:43 09/28/13:43  1
50541 Not a messaging split  Split 89  4C  09/28/13:43 09/28/13:43  1
```

Display Fiber-Link

display fiber-link fiber# [print | schedule]

The display fiber-link command displays the translation data associated with an existing fiber link.

The output for this command is the same as that for **change fiber-link**.

Parameters

fiber# The administered number (**1** to **27**) associated with a fiber link (or fiber link pair in a duplicated PNC).

Display Initcauses

display initcauses [print | schedule]

The display initcauses command displays a history of recovery steps taken by the system. *This command displays information for restarts of the active processor only.* Whenever the processor resets and the system is restarted, whether initiated by a technician command or by system software, information about the recovery is stored. If the reset is escalated, only the reset that successfully completes is recorded. Information about the reset may also be found in the Error Log. When a reset 4 (reboot) occurs, the Error Log is saved on the Mass Storage System.

Records of the last 16 restarts are retained in the initcauses log in chronological order. A power failure results in loss of all records in the initcauses log.

Output

The entire initcauses log, consisting of 16 resets, fills one screen.

Cause

This gives the reason for the system reset, as follows:

Agent Request: The restart was requested through the Agent/GEMINI debugger interface (not available to craft login).

Craft Request: The reset was initiated by use of the **reset system** command. This includes restarts requested through the SPE-Down interface.

Initialized: This represents a power-up, and is always the first entry in the log unless more than 15 restarts have occurred since the last power up.

Interchange: A spontaneous interchange was executed by the system usually in response to a major hardware fault on the active SPE.

Maintenance Reset: The SPE was reset by maintenance software on the SYSAM circuit pack. This includes periodic resets initiated by the SYSAM during SPE-Down mode.

mon: A restart has been initiated from the system monitor (not available to craft login).

Sanity Timer Reset: The sanity timer on the processor timed out and reset the system. This usually indicates corrupted software.

Scheduled Interchange: An interchange was performed as part of scheduled daily maintenance.

Software Request: System software detected problems and executed a restart to recover.

SPE-Select Lead Change: On systems with duplicated SPEs, the SPE select lead changed and reset the processor.

SPE-Select Switch: The SPE select switches on the DUPINT circuit packs were manually set to lock the standby SPE active, causing a spontaneous interchange. This is **not** a recommended procedure.

Unknown: The restart could not be classified. The Error Log may contain more information about the restart.

Upgrade Software: The indicated SPE was reset as part of the execution of the upgrade software command. If this precedes a Software Requested level 2 reset, both are probably associated and indicate a non-call preserving upgrade took place.

Action	The level of recovery performed by the system. 1 Reset system 1 (Warm) 2 Reset system 2 (Cold-2) 3 Reset system 3 (Cold-1) 4 Reset system 4 (Reboot) 5 Reset system 5 (Extended Reboot) Planned SPE Interchange (requested by **reset system** command or scheduled maintenance)
Escalated	Whether the restart was escalated to a higher level than originally attempted. The system's software escalation strategy can perform a higher level restart than the one initiated if problems prevent or conditions interfere with normal execution.
Carrier	The carrier (always A in a simplex system) on which the restart took place. If an interchange took place, this indicates the carrier of the newly active SPE that was switched into.
Time	The month, day and time of the restart.

The following display shows a typical result when **dis init** is entered.

```
display initcauses

                          INITIALIZATION CAUSES

Cause                   Action   Escalated   Carrier     Time

Initialized               4         no         1A     06/01  7:14
Scheduled Interchange     i         no         1B     06/02  2:00
Scheduled Interchange     i         no         1A     06/03  2:00
Scheduled Interchange     i         no         1B     06/04  2:00
Scheduled Interchange     i         no         1A     06/05  2:00
Scheduled Interchange     i         no         1B     06/06  2:00
Scheduled Interchange     i         no         1A     06/07  2:00
Scheduled Interchange     i         no         1B     06/08  2:00
Scheduled Interchange     i         no         1A     06/09  2:00
Scheduled Interchange     i         no         1B     06/10  2:00
Scheduled Interchange     i         no         1A     06/11  2:00
Interchange               1         no         1B     06/11 12:14
Craft Request             i         no         1A     06/11 15:40
Craft Request             i         no         1B     06/11 16:33
Scheduled Interchange     i         no         1A     06/12  2:00
Scheduled Interchange     i         no         1B     06/13  2:00



Command successfully completed
```

Display Port

display port UUCSSpp [print | schedule]

For a port at a given location, this command displays the equipment connected to the port, and an alternate identifier for the port, depending on its type.

Output

Port	The port address (cabinet-carrier-slot-circuit) of the specified user specified port.
Equipment Type	The type of hardware that is connected to the port.
Identification	The meaning of this field depends upon the type of equipment connected to the port. For example:

Equipment Type	Identification
station	extension
trunk group	trunk group and member
modem pool	modem pool group

The following display shows a typical result when **display port** is entered.

```
display port 1c0801                                        SPE A
                            PORT INFORMATION

                             Port: 01C0801

                           Equipment Type: Station
                           Identification: 1021
```

Display Synchronization

display synchronization [print | schedule]

This command displays information regarding the type and source of timing reference signals used to synchronize the system and the location of all DS1 Interface circuit packs.

The display screen is the same as the one described under **change synchronization**.

Display System-Parameters Maintenance

display system-parameters maintenance [high-resolution] [print | schedule]

The “display system-parameters maintenance” command displays the translation data for maintenance related system parameters.

EXAMPLES

display system-parameters maintenance
display system-parameters maintenance print
display system-parameters maintenance schedule

Print	This option will cause the report to be printed if a printer is linked to the SAT..
Schedule	When the schedule option is specified, the command is validated and a schedule form is displayed to allow the technician to schedule execution of the command at a specified time. The information displayed by the command will be sent to the system printer instead of the screen.

For more information see "Common Input Parameters" at the beginning of this chapter.

Output

An input form is displayed with the following fields. Defaults for data entry fields are listed in parentheses.

Product Identification	This is a 10-digit number starting with 1 that identifies the switch to an Operations Support System (OSS), for example, INADS.
OSS Telephone Number	The telephone number that the switch uses to call INADS for alarm origination. The number must be obtained from the National Customer Support Center (NCSC) or the TSC. # and ***** are not allowed in the telephone number.
Alarm Origination Activated	Indicates whether alarm origination is activated or not. If ‘‘yes,’’ all Major and Minor alarms result in an automatic call to INADS. If ‘‘no,’’ alarm origination does not take place. Warning alarms are not reported to INADS. (no)
Cleared Alarm Notification	Enables the switch to originate a call to the OSS and send an alarm resolution message whenever all previously reported Major and Minor alarms are resolved. Alarm Origination must be activated in order for Cleared Alarm Notification to work. (no)

Restart Notification	Enables the switch to originate a call to the OSS and report any system restarts caused by problems with the switch.
Test Remote Access Port	Specifies whether testing of the remote access port on the SYSAM circuit pack is enabled. This field should be set to "yes" whenever there is an INADS line connected to the switch and there is a maintenance contract in effect so that alarm origination capability is maintained. If no equipment is connected to the remote access port, or if a trunk for remote access and alarm origination is not provided, running tests on the remote access port on the SYSAM results in test failures. This causes unnecessary maintenance alarms and allows potentially destructive tests to be run. Setting this field to "no" prevents this. (no)
CPE Alarm Activation Level	Indicates the minimum level (Major, Minor or Warning) at which the Customer-Provided Equipment (CPE) alarm is activated. If the level is ‘‘none,’’ the CPE does is not activated for any alarm. (none) **NOTE:** The CPE alarm is always activated when the switch goes into Emergency Transfer, regardless of the CPE Alarm Activation Level setting.
Customer Access to INADS Port	Provides the capability to prohibit access to system administration and maintenance interface, via the INADS port when using customer login ID’s. This field can only be activated by AT&T services through system-parameters maintenance administration. (no)

Scheduled Maintenance

A series of maintenance tests and operations runs automatically every day according to the schedule and settings specified in the following fields.

Start Time	The hour and minute in 24-hour notation at which daily scheduled maintenance will begin running. (22:00)
Stop Time	The hour and minute when scheduled daily maintenance will stop running. If any daily maintenance operations are not completed by this time, the system will note where in the sequence it stopped and perform those operations during the next scheduled daily maintenance.
Daily Maintenance	This display-only field simply represents the series of tests that are always run by maintenance software as part of daily maintenance.

Save Translation	This field indicates on which days translation data in memory will automatically be saved to the Mass Storage System disk and/or tape devices during scheduled maintenance. The save operation is first made to disk, followed by a disk backup to tape. On systems with duplicated SPEs, translation data is saved on both SPEs. Valid entries are **daily**, days of the week, or **no**. "No" specifies that no automatic saves are to be executed. (daily)
Control Channel Interchange	Each port network has a pair of TDM busses called A and B, each of which has a set of time slots dedicated to use by the control channel. At any one time, the control channel in each PN is carried on only one of the two busses. This field indicates on which days the control channel in each port network will be switched from one of the paired TDM busses to the other. Valid entries are **daily**, days of the week, or **no**. "No" specifies that no interchange be executed. (no)
System Clocks Interchange	On High and Critical Reliability systems, this option causes a Tone-Clock interchange in each port network with duplicated Tone-Clock circuit packs. Each port network interchanges into the standby Tone-Clock for 20 seconds and then back to the Tone-Clock that was originally active. This field indicates on which days the interchanges are to take place. Valid entries are **daily**, days of the week, or **no**. "No" specifies that interchanges be executed. (no) The system performs a Tone-Clock interchange, making the stand by Tone-Clock active. The newly active Tone-Clock circuit pack is tested and, while active, provides system clocks for the port network in which it resides. The system then interchanges back to the originally active Tone-Clock circuit pack.
SPE Interchange	On systems with duplicated SPEs, this field indicates on which days an SPE interchange will be executed during scheduled maintenance. Valid entries are **daily**, days of the week, or **no**. "No" specifies no scheduled interchanges. (no)
Minimum Threshold for TTRs	When the number of touch tone receivers (TTRs) in service falls below this number (4 to 200), a WARNING alarm is raised against TTR-LEV (see TTR-LEV in Chapter 9, "Maintenance Object Repair Procedures"). These are also known as dual-tone multifrequency receivers (DTMRs). There are 4 TTRs on each TN748 Tone Detector circuit pack, and up to 50 TN748s in a system. To alarm the first occurrence of a TTR being taken out of service, set this field to 4 times the number of TN748s. If this number is set to more than three less than the total number of TTRs, a port network with only one TN748 could lose all of its TTRs before this alarm is raised.

Minimum Threshold for CPTRs	When the number of call progress tone receivers in service falls below this number (2 to 100), a WARNING alarm is raised against TTR-LEV (see TTR-LEV in Chapter 8, "Maintenance Commands"). These are also known as general purpose tone detectors (GPTDs). There are 2 CPTRs on each TN748 Tone Detector circuit pack, and up to 50 TN748s in a system. To alarm the first occurrence of a CPTR being taken out of service, set this field to 2 times the number of TN748s. If this number is set to more than one less than the total number of TTRs, a port network with only one TN748 could lose all of its CPTRs before this alarm is raised.
Minimum Threshold for Call Classifier Ports	When the number of call classifier ports (CLSFY-PTs) in service falls below this number, a WARNING alarm is raised against TTR-LEV (see TTR-LEV in Chapter 9, "Maintenance Object Repair Procedures"). Valid entries are 1 to 200. There are 8 ports on each TN744 Call Classifier circuit pack, and up to 25 TN744s in a system. To alarm the first occurrence of a CLSFY-PT being taken out of service, set this field to 8 times the number of TN744s. If this number is set to more than 7 less than the total number of CSLFY-PTs in the system, a port network with only one TN744 could lose all of its CLSFY-PTS before the alarm is raised. If there are no TN744s in the system, leave this field blank.

Test Type 100, Test Type 102, Test Type 105	An extension assigned to receive tie-trunk calls from other switches with test line origination capability. The system responds by sending a sequence of test tones. Test Type 100 tests far end to near end loss and C-message by sending: ■ 5.5 seconds of 1004 Hz tone at 0dB ■ Quiet until disconnect; disconnect is forced after one minute Test Type 102 tests far end to near end loss by sending: ■ 9 seconds of 1004 Hz tone at 0dB ■ 1 second of quiet ■ This cycle is repeated until disconnect; disconnect is forced after 24 hours. Test Type 105 tests 2-way loss, gain slope, and C-message and C-notch noise by sending: ■ 9 seconds of 1004 Hz at -16dB ■ 1 second of quiet ■ 9 seconds of 404 Hz at -16dB ■ 1 second of quiet ■ 9 seconds of 2804 Hz at -16dB ■ 30 seconds of quiet ■ One-half second of Test Progress Tone (2225 Hz) ■ Approximately five seconds of quiet ■ Forced disconnect
ISDN-PRI Test Call Extension	The extension used by a far-end ISDN node to place a call to the system to test the ISDN-PRI trunks between the far-end and the system.

ISDN-BRI Service SPID

This field shows whether or not the link is associated with the Service SPID. If the link is associated with the Service SPID, the field contains a number from “0 to 99999’’ this number is the test spid (See *SPID Facility Test* in Chapter 9, "Maintenance Object Repair Procedures", under *BRI-SET* MO) otherwise, this field is blank. Service SPID is a feature used by the system technician to check building wiring between the switch and the BRI endpoint.

DSO Loop-Around Test Call Extension

This field contains the extension number for the test call extension number. This test extension number will be used to establish a loop-around connection on the selected trunk.

The DSO Loop-Around Test Call feature is used primarily for testing DSO channels associated with non ISDN-PRI trunks. The loop-around is activated by dialing the test extension number. Multiple DSO Loop-Around connections can be set up by placing multiple calls to the loop-around extension.

For more information see Chapter 6, "Additional Maintenance Procedures".

Loss Plan

Use only when extra loss is required to maintain quality of transmission on conference calls. Leave this field blank if no extra loss is required. If extra loss is required, enter digits as shown below.

No. Of Parties To Be Conferenced	Enter Digit
3	2
4	3
5	4
6	5
7	6

SPE Optional Boards: These fields indicate whether a Disk circuit pack is present in the system, and which Packet Interface slots are administered. If a Packet Interface circuit pack is physically present, the corresponding Packet Interface field is set to y when the system boots, and no change to that field is allowed. If the system is equipped with duplicated SPEs, a Packet Interface field is set to y when either SPE carrier contains a Packet Interface circuit pack in the corresponding position. If a Packet Interface circuit pack is not present, then the value for the Packet Interface field is read from translation data stored on disk or tape. If the field is set to n, a Packet Interface circuit pack may be administered by changing the corresponding Packet Interface field to y.

The following display shows a typical result when **display system-parameters maintenance** is entered.

```
display system-parameters maintenance       Page 1 of 2


MAINTENANCE-RELATED  SYSTEM PARAMETERS


OPERATIONS SUPPORT PARAMETERS

        Product Identification: 123456789
          OSS Telephone Number: 555-5555
   Alarm Origination Activated? y
    Cleared Alarm Notification? y
          Restart Notification? y
       Test Remote Access Port? y
    CPE Alarm Activation Level: none
Customer Access to INADS Port?  n


SCHEDULED MAINTENANCE

                  Start Time: 01 : 00    Stop Time: 04 : 00
           Daily Maintenance: daily
            Save Translation: daily
 Control Channel Interchange: no__
   System Clocks Interchange: no__
             SPE Interchange: no__
```

```
  display system-parameters maintenance           Page 2 of 2

          MAINTENANCE-RELATED SYSTEM PARAMETERS

MAINTENANCE THRESHOLDS ( Before Notification )
  Minimum Threshold for TTRs: 4    Minimum Threshold for CPTRs: 1
  Minimum Threshold for Call Classifier Ports: _

TERMINATING TRUNK TRANSMISSION TEST (Extension)
  Test Type 100:        Test Type 102:         Test Type 105:

ISDN MAINTENANCE
   ISDN-PRI TEST CALL Extension: _____   ISDN BRI Service SPID: _____

DS1 MAINTENANCE
   DSO Loop-Around Test Call Extension: _____

LOSS PLAN (Leave Blank if no Extra Loss is Required)
   Minimum Number of Parties in a Conference Before Adding Extra Loss: _____

SPE OPTIONAL BOARDS
 Disk? y   Packet Intf1? y   Packet Intf2? n     Packet Intf3? n
```

Display Time

display time [print | schedule]

This command displays the system date and time that is used by software processes for scheduling and so on.

Output

```
display time
                                DATE AND TIME

       DATE

           Day of the Week: Sunday            Month: January
          Day of the Month: 1                  Year: 1992

       TIME
                     Hour: 6                Second: 20
                   Minute: 8
```

Enable Administered-Connection

enable administered-connection [adm-conn# | all

This command re-enables scheduled and periodic testing and in-line error processing on a specified administered connection (AC) or all ACs. It is used after previously disabling maintenance via the **disable administered-connection** command. These commands can be useful in isolating results of certain maintenance processes by preventing interference from others.

Parameters

adm-conn#	The number (1-128) of the administered connection as assigned during administration.
all	This qualifier causes all ACs in the system to be enabled.

Enable Synchronization-Switch

enable synchronization-switch

This command returns control of the selection of synchronization source to the maintenance subsystem and tone-clock after being previously turned off by the **disable synch** command. See SYNCH in Chapter 9, "Maintenance Object Repair Procedures" for details.

Enable Test-Number

enable test-number test#

Examples

enable test-number 102

This command will re-enable a specified test that was previously turned off with the **disable test** command. (The **disable test** command is not available to the craft login.) While disabled a test cannot be run by background or demand maintenance. Before enabling a test, ascertain why it was disabled, and inform INADS that it has been turned back on.

Parameters

test# The number of the test to be re-enabled

Descriptions of each test appear under the relevant maintenance object in Chapter 9, "Maintenance Object Repair Procedures". See the Index for a numerical list of all demand maintenance tests.

Get Vector

get vector [long] [print]

This command displays the triggering conditions and the SPE associated with a core dump of memory to the tape or disk device. The vector is a set of system reset levels which will cause the contents of memory to be saved on tape. When the core dump occurs, the vector settings are cleared. The vector is set with the **set vector** command (not available to craft logins). If no core dump has taken place since the vector was set, the settings are displayed. If a core dump has taken place, the time and location of the core dump files is displayed.

NOTE:
When a system reset of a level that is set to trigger a core dump takes place, the vector is cleared regardless of whether the core dump is successful.

Parameters

long — Specifies display of the timestamps for the core dump. If SPEs are duplicated, timestamps are printed for both SPEs (or a message stating why the timestamp cannot be printed is displayed).

Core Dump Vector — The conditions which are enabled to initiate a core dump to tape or disk, as represented by a hexadecimal value. The hexadecimal value represents a combination of four system reset levels: warm start (reset level 1), cold 2 restart (2), cold 1 restart (3), and reboot (4). The following table shows which reset levels will initiate a core dump for each value of the vector.

Core Dump Vector Values

Vector Value	Reset Levels	Vector Value	Reset Levels
0	none	8	4
1	1	9	1, 4
2	2	a	2, 4
3	1, 2	b	1, 2, 4
4	3	c	3, 4
5	1, 3	d	1, 3, 4
6	2, 3	e	2, 3, 4
7	1, 2, 3	f	1, 2, 3, 4

Reset Level Names

Reset Level	Common Name
1	Warm Restart
2	Cold-2 Restart
3	Cold-1 Restart
4	Reboot

Set Vector Command Option	This indicates from which SPE the core dump is to be taken as specified with the **set vector command**. This is always spe-active for simplex systems. Additional options for systems with duplicated SPEs are spe-standby and spe-smm. If the vector has been cleared or not set, blanks are displayed.
Core Dump Time	For each SPE, the date and time at which the core dump took place, or on of the following: Blank: No core dump has been stored. Can't access: The system cannot currently access the core dump file. (For example, a standby SPE may not be refreshed). Non-duplicated SPE: This SPE does not exist (as in a simplex system). Device busy: the MSS device on which the core dump is stored is busy with another operation.

The following display shows a typical result when **get vic is** entered and no core dump has taken place.

```
get vector

                      GET RESULTS

  Core Dump Vector           Set Vector Command Option

         F                           spe-standby

  Core Dump Time

  SPE_A
  SPE_B




Command successfully completed
```

The following display shows a typical result when **get vec long** is entered and a core dump has taken place, clearing the vector.

```
get vector

                                    GET RESULTS

  Core Dump Vector           Set Vector Command Option

         F                           spe-standby

  Core Dump Time

  SPE_A   JUN 5 14:31
  SPE_B   device busy



Command successfully completed
```

List Cabinet

list cabinet [print | schedule]

The list cabinet command displays the type, layout, room, floor, building, operational carriers and port network number for each cabinet in the system. This command is useful when the port network number is needed for another command entry and only the cabinet number is known.

Output

Number	The administered number of the cabinet.
Type	The type of cabinet (`PPN` or `EPN`).
Layout	The layout of the cabinet (`five carrier` or `stack` for a single carrier stack).
Room	Room where cabinet is located, if administered on the cabinet form.
Floor	Floor where cabinet is located, if administered on the cabinet form.
Building	Building where cabinet is located, if administered on the cabinet form.
A B C D E	The letter designation of each carrier. For each carrier the port network number is given (`PN #`). If the carrier is a switch node this number is preceded by `SN`.

The following display shows a typical result when **list cabinet** is entered on a system with four port networks. In this example there are two port networks in cabinet 2.

```
list cabinet                                          Page   1   SPE A

                                CABINET REPORT

Number Type Layout Room   Floor  Building   A      B      C      D      E
  1     PPN 5-car                          PN 01  PN 01  PN 01  PN 01  SN 01
  2     EPN 5-car                          PN 02  PN 02  PN 02  PN 05  PN 05
  3     EPN 5-car                          PN 03  PN 03  PN 03  PN 03  PN 03
  4     EPN stack                          PN 04  PN 04  PN 04  PN 04  PN 04





Command Successfully Completed
```

List Configuration

list configuration hardware-group [print | schedule]

NOTE:
The **list configuration software-version** command is discussed separately under its own heading.

Hardware configuration reports list, for each circuit pack in the group specified, the type, code, suffix, and vintage of the requested circuit packs as installed in the switch, and all ports assigned to the circuit pack.

Parameters

Enter one of the following hardware groups.

- **all—**Specifies the display of all circuit packs administered and/or physically inserted in port, switch node and control carriers on the entire system.
- **board *UUCSS***—Specifies the display of all assigned ports on the circuit pack specified by cabinet, carrier and slot.
- **carrier *c***—Specifies the display of all circuit packs and assigned ports on a specified carrier.
- **control—**Specifies the display of all circuit packs located in the control complex.
- **ds1**—Specifies the display of all the DS1 (TN722, TN767 and TN464) circuit packs administered and/or physically inserted in port carriers on the entire system.
- **port-network pn#**—Specifies the display of all circuit packs located in a specified port network. **List cabinet** gives the port network number(s) associated with a particular cabinet. Circuit packs on switch node carriers are not displayed when the port-network qualifier is entered. To display SN circuit packs, use the **all**, **carrier** or **board** qualifiers.
- **stations**—Specifies the display of all circuit packs that can be assigned stations (including DS1 circuit packs for remote stations). All assigned ports are displayed.
- **trunks**—Specifies the display of all circuit packs that can be used for administering trunks. All assigned ports are displayed.

Examples

list configuration carrier 2c schedule
list configuration port-network 5
list configuration stations print

Output

Assigned Ports:

- **Board Number**l—The functional name of the circuit pack
- **Code**l—The TN or UN code and suffix of the circuit packs are displayed.
- **Vintage 00000000-065535 KKKKKK**l—The vintage number of the circuit pack.

- **no board**]—The circuit pack is administered but not physically installed.
- **conflict**]—The circuit pack administered to the slot differs from the circuit pack that is physically installed.
- **no link**]—The T1 link is down to a DS1 circuit pack.

Field definitions:

- **Signaling**—This field is displayed only when "list configuration ds1" option is selected. The contents of the field are the same as the signaling mode administered for the ds1 circuit pack (via add/change ds1 command) or "none" if the circuit pack is not administered.
- **Name**]—This field is displayed only when "list configuration ds1" option is selected. The contents of the field are the same as the name administered for the ds1 circuit pack (via add/change ds1 command) or "blank" if the circuit pack is not administered.
- **CSU MOD**]—This field is displayed only when "list configuration ds1" option is selected. The field contains the identification number of the Integrated CSU module present on the ds1 circuit pack (TN767E or later / TN464F or later) or "none". If the circuit pack is a TN464E or TN767D, “unknown” will be displayed. If the circuit pack is a TN464D or TN767C or earlier suffix DS1 board, then “n/a” will be displayed.

Assigned Ports

Each port on the circuit pack is represented by a position corresponding to its circuit number in ascending order from left to right. The assigned ports are not displayed for "list configuration ds1". Two rows are required for circuit packs with more then 8 ports. The position displays one of the following values depending on its administered status:

- **01-16**—The circuit number of an assigned port.
- **u**—The port corresponding to this position exists but is unassigned.
- **t**—The port is not currently assigned and is supported by the Terminal Translation Initialization feature. Ports in this state can be activated by the TTI association sequence.
- **mj**—The port corresponding to this position is currently assigned as an external device (mj) alarm port.
- **mn**—The port corresponding to this position is currently assigned as an external device (mn) alarm port.

Each port on a TN556 ISDN-BRI circuit pack can have two BRI endpoints. BRI ports are displayed once when assigned only one endpoint and twice when fully configured with two endpoints.

The following display shows a typical result when **list configuration all** is entered.

```
list configuration all                                          Page   1

                              SYSTEM CONFIGURATION

Board                                                     Assigned Ports
Number   Board Type              Code     Vintage    u=unassigned t=tti

01C00    MAINTENANCE/TEST       TN771C    000003     u  02 03 04
01C01    AUXILIARY TRUNK        TN748C    conflict   u  u  u  u
01C02    EXPANSION INTRFC                 no board
01C03    PGATE BOARD            TN577     000003     u  u  u  u
01C05    TONE DETECTOR          TN748B    000002     01 02 03 u  05 06 07
01C06    DS1 INTERFACE          TN767     000011     u  u  u  u  u  u  u
                                                      u  u  u  u  u  u  u
                                                      u  u  u  u  u  u  u
01C07    ANALOG LINE            TN742     000010     u  u  u  u  u  u  u
01C08    HYBRID LINE            TN762B    000004     u  u  u  u  u  u  u
01C09    ANALOG LINE            TN742     000010     u  u  u  u  u  u  u
01C11    DIGITAL LINE           TN754     000004     u  u  u  u  u  u  u
01C12    DID TRUNK              TN753     000006     u  u  u  u  u  u  u
01C13    ANALOG LINE            TN742     000010     u  u  u  u  u  u  u
01A14    SYS ACCESS-MAINT       TN1648    000002    mj mn
01A15    Maintenance            TN775B    000002    mj u

  press CANCEL to quit --  press NEXT PAGE to continue
```

The following display shows a typical result when **list configuration ds1** is entered.

```
list configuration ds1

                    SYSTEM CONFIGURATION - DS1 Circuit Packs

Location   Code    Vintage     Signaling         Name            CSU MOD

01B05      TN464F  000002      isdn-pri                          120A1
01B06      TN464D  000002      isdn-pri                          n/a
01B10      TN767C  000003      none                              n/a
01B11      TN767E  000003      robbed-bit                        120A1
01B12      TN767E  conflict    none                              <blank>
01C06              no board    none                              <blank>
01C13      TN464E  000003      common-channel                    unknown
01C16      TN767D  000024      robbed-bit                        unkonwn
01C18      TN464F  000002      isdn-pri                          none
```

List Config Software-Version

list configuration software-version [memory-resident | long] [print | schedule]

This command displays

- Software version numbers and compatibility indexes of the software load modules stored in system memory (RAM) and on the Mass Storage System devices (tape and disk).
- The dates and times when translation and announcement data were last saved to the MSS.
- Information about any software update files that have been applied to the system. See "Software Updates" in Chapter 6, "Additional Maintenance Procedures" for an explanation of software versions and compatibility indexes.

Parameters

long	Specifies display of data for both SPEs in a high or critical reliability If not used, only data for the active SPE is shown.
memory-resident	Specifies display of RAM-resident files only. Fields for tape and disk data will contain `n/a`

Output

If the tape contains a core dump file, fields for tape data display `coredump`. When a core dump is present, all other files on the device are marked invalid.

If the tape or disk files cannot be read at the time the command is entered, the relevant fields display `no tape` or `no disk`. (This does not indicate that the system does not recognize the presence of the device.)

Fields in the SPE-B column are blank for standard reliability systems. On high and critical reliability systems, only fields for the active SPE are displayed unless the **long** option is specified.

Tape and Disk Second Copy Fields

Many of the files on disk and tape are duplicated: a second copy of the file is stored on the same device. The Second Copy fields indicate whether the two copies are consistent using the following entries:

Good	The second copy is considered usable. The time stamp and/or vintage of the second copy matches the first, and its status bits mark it as a good file.
Inconsistent	The time stamp or vintage of the file is inconsistent with the first copy, or the status bits mark it as a bad file. Follow normal escalation procedures.
Inaccessible	The second copy of the file could not be accessed. Media failure is the most probable cause for this. Follow normal escalation procedures.

UPDATE FILE Section

The top half of page 1 of the form displays information pertaining to software field-update files (‘‘patches’’).

Creation (GMT) Tape and (GMT) Disk	When the update file was originally created, in Greenwich Mean Time (GMT). Note that this is *not* the time at which the update file was written to the MSS device.
Old-Version Tape and Disk	The software version for which the update was created.
Old-Identifier Tape and Disk	Which previous update file this update file expected to find stored in the MSS when it was applied.
New-Identifier Tape and Disk	Uniquely identifies the current update file.

SOFTWARE VERSION Section

This section at the bottom of page 1 of the output form displays information related to the current software-load module stored in memory and in the MSS.

Memory Resident	Version number of the RAM-resident load module.
Tape Resident	Version number of the tape-resident load module.
Tape Second Copy	See Second Copy remarks above.
Disk Resident	Version number of the disk-resident load module.

Disk Second Copy	See Second Copy remarks above.
Update-identifier	This uniquely identifies the update file, if any, that has been applied to memory.
Update-state	The status of the software field-update (''patch'') file:
	none in memory
	No software update has been applied to memory.
	immediate partially applied
	A software update failed in the process of being applied. Check the validity of the update file that was sent. Check also the hardware error log for tape errors, and follow standard maintenance procedures.
	all immediate applied deferred pending
	A valid update file was received by the switch, and all update files marked for immediate application were applied. This message indicates that there are additional files in the update file whose application has been deferred until a system reset of a required level takes place.
	deferred partially applied
	Application of the deferred files of a software update was attempted and failed. Check the validity of the update file that was sent. Check also the hardware error log for tape errors, and follow standard maintenance procedures.
	entirely applied to memory
	All files in a software update have been successfully applied.

TRANSLATION DATE Section

This section at the top of page 2 displays information related to the translation files as stored in memory and the MSS.

Memory Resident	Date and time marked on the tape or disk when translation data was last read from the MSS into memory. This is stored in SPE memory and is not modified by changes to translation data. A save translation will update this date. If "Date invalid" is displayed, the timestamp does not contain the expected information.
Tape Resident	The last date and time that translation data was saved to tape. This date is read from tape and appears blank if the tape is not installed.

Tape Second Copy	See Second Copy remarks above.
Disk Resident	The last date and time that translation data was saved to disk. This date is read from disk and appears blank if the disk is not installed.
Disk Second Copy	See Second Copy remarks above.

SYSTEM CONFIGURATION Section

This section of page 2 pertains to size of the memory configuration. All fields should display large except when the tape indicates the presence of a `coredump`.

ANNOUNCEMENT DATE Section

This section at the bottom of page 2 displays data pertaining to the recorded announcement files.

Tape Resident	The last date and time that announcement data was saved to tape. This date is read from the tape.
Tape Second Copy	The last date and time that announcement data was saved to tape. This date is read from the second copy of the file on the tape.
Disk Resident	The last date and time that announcement data was saved to disk. This date is read from disk and appears blank if the disk is not installed.
Disk Second Copy	The last date and time that announcement data was saved to disk. This date is read from the second copy of the file on the disk.

COMPATIBILITY INDEX Section

This section on page 3 displays data pertaining to the compatibility index, which is used to determine what types of software updates can be applied to a system running this software load.

Memory Resident	The compatibility index of the software version in memory.
Tape Resident	The compatibility index of the software version on tape.
Disk Resident	The compatibility index of the software version on disk.

The following display shows a typical result when **list configuration software-version** is entered on a simplex system. On a duplicated system the

fields under SPE-B should display the same entries as the SPE-A fields if all files are consistent.

```
list configuration software-version              Page   1

                          SOFTWARE VERSIONS
                     SPE-A                   SPE-B
         UPDATE FILE
Creation (GMT) Tape: none
         (GMT) Disk: none
   Old Version Tape: none
               Disk: none
Old Identifier Tape: none
               Disk: none
New Identifier Tape: none
               Disk: none
    SOFTWARE VERSION
    Memory Resident: DG3r01.06.0.01.0
      Tape Resident: DG3r01.06.0.01.0
   Tape Second Copy: good
      Disk Resident: DG3r01.06.0.01.0
   Disk Second Copy: good
  Update Identifier: none
       Update State: none in memory

       press CANCEL to quit --  press NEXT PAGE to continue
```

```
list configuration software-version             Page   2

                            SOFTWARE VERSIONS
                       SPE-A                        SPE-B
     TRANSLATION DATE
    Memory Resident: 10:00 pm  SAT APR 11, 1992
      Tape Resident: 2:00 am  SAT APR 11, 1992
    Tape Second Copy: good
      Disk Resident: 10:00 pm  SAT APR 11, 1992
    Disk Second Copy: good

SYSTEM CONFIGURATION
    Memory Resident: large
      Tape Resident: large
      Disk Resident: large

    ANNOUNCEMENT DATE
      Tape Resident: 11:38 am  FRI MAR 27, 1992
   Tape Second Copy: 11:38 am  FRI MAR 27, 1992
      Disk Resident: 10:09 pm  SAT APR 11, 1992
    Disk Second Copy: 10:09 pm  SAT APR 11, 1992
```

```
                                SOFTWARE VERSIONS
                        SPE-A                        SPE-B
   COMPATIBILITY INDEX
      Memory Resident: 8.3
        Tape Resident: 8.3
        Disk Resident: 8.3
```

The following display shows a typical result when **list config soft mem** is entered on a system with duplicated SPE while the B carrier SPE is active.

```
list configuration software-version memory-resident   Page 1   SPE B

                            SOFTWARE VERSIONS
                     SPE_A                        SPE_B
         UPDATE FILE
Creation (GMT) Tape:                              n/a
         (GMT) Disk:                              n/a
   Old Version Tape:                              n/a
               Disk:                              n/a
Old Identifier Tape:                              n/a
               Disk:                              n/a
New Identifier Tape:                              n/a
               Disk:                              n/a
    SOFTWARE VERSION
    Memory Resident:                              DG3r01.06.1.00.0
      Tape Resident:                              n/a
   Tape Second Copy:                              n/a
      Disk Resident:                              none
   Disk Second Copy:                              n/a
  Update Identifier:                              none
       Update State:                              none in memory

          press CANCEL to quit --  press NEXT PAGE to continue
```

```
list configuration software-version memory-resident    Page 2   SPE B

                              SOFTWARE VERSIONS
                   SPE_A                        SPE_B
    TRANSLATION DATE
  Memory Resident:                            12:10 pm THU JUN 4, 1992
    Tape Resident:                             n/a
 Tape Second Copy:                             n/a
    Disk Resident:                             n/a
 Disk Second Copy:                             n/a

SYSTEM CONFIGURATION
  Memory Resident:                             large
    Tape Resident:                             n/a
    Disk Resident:                             n/a

   ANNOUNCEMENT DATE
    Tape Resident:                             n/a
 Tape Second Copy:                             none
    Disk Resident:                             n/a
 Disk Second Copy:                             none



  press CANCEL to quit --  press NEXT PAGE to continue
```

```
list configuration software-version memory-resident   Page 3  SPE B

                              SOFTWARE VERSIONS
                     SPE_A                        SPE_B
 COMPATIBILITY INDEX
    Memory Resident:                             8.4
      Tape Resident:                             n/a
      Disk Resident:                             n/a



Command successfully completed
```

List Disabled-MOs

list disabled-MOs [print | schedule]

This command displays a list of the maintenance objects that have been disabled with the **disable MO**, **disable all**, or **disable MO-all** command (not available to craft logins). as well as whether or not the command has been run. Use **display disabled-tests** for numbers of tests that have been disabled.

Output

Maintenance Name	Type of maintenance object(s) disabled. "ALL" is displayed if all MOs are either enabled or disabled.
Location	The physical location (cabinet-carrier-[slot-circuit]) of the maintenance objects. Blank when "ALL" is displayed under Maintenance Name.
Status	Whether the MOs displayed are enabled or disabled.

The following display shows a typical result when **list disabled-MOs** is entered and no MOs are currently disabled.

```
list disabled-MOs

                    DISABLED MAINTENANCE OBJECT INFORMATION

               Maintenance Name     Location      Status

               ALL                                Enabled


Command successfully completed
```

List Fiber-Link

list fiber-link [print | schedule]

This command displays a list of all fiber links in the system. The list is a summary of data entered on the fiber link form (**add, display, change**, or **remove fiber-link**).

Output

FIBER LINK #	The administered number used to identify the fiber link (1 to 27).
TYPE	The types of circuit packs that constitute endpoint 1 and endpoint 2 of the fiber link. (ei or sni).
A-PNC LOC	The physical locations (cabinet-carrier-slot number) of the circuit packs that constitute the endpoints.
B-PNC LOC	In a system with duplicated PNC, the physical location (cabinet-carrier-slot number) of the circuit packs that constitute the endpoints of the link in the B-PNC.
DS1 CONV	Whether or not an endpoint of the link is remotely located by means of a DS1C Converter Complex.

The following display shows a typical result when **list fiber** is entered on a system with duplicated PNC and 5 EPNs, one of which is DS1C remoted.

```
list fiber-link                                          SPE A
                        FIBER LINK ADMINISTRATION

FIBER     - - - ENDPOINT 1- -    - - -ENDPOINT 1- -   DS1
LINK #    TYPE  A-PNC   B-PNC    TYPE  A-PNC  B-PNC   CONV
                LOC     LOC             LOC    LOC

1         ei   01E01   01D01     sni   01E02  01D02    n
2         ei   02A01   02B02     sni   02E02  02D02    n
3         ei   03A01   03B02     sni   01E20  01D20    n
4         ei   04A01   04B02     sni   02E02  02D20    n
5         ei   05A01   05B02     sni   02E03  02D03    y
6         sni  01E13   01D13     sni   02E13  02D13    n
7         sni  01E09   01D09     sni   02E09  02D09    n
8         sni  01E14   01D14     sni   02E14  02D14    n
9         ei   06A01   06B02     sni   01E03  01D03    n

Command Successfully Completed
```

List History

list history [print | schedule]

The list history command generates a log listing of the most recent data-affecting administration and maintenance commands successfully completed.

Administration data commands change translation data. Maintenance data commands change state information. For example, **change station** would be classed as a data command, whereas **display station** would not.

All information in the transaction log is saved on tape as translation data when the "save translation" command is performed (LIFO order). A system reset of level 3 or higher (COLD 1 and reboots) saved translations and the transaction log are read from tape. In this way, the translation data and the data in the transaction log will remain compatible.

The translation log is written to tape as translation data when the save translation command is executed.

Translation data is time stamped when saved on tape. This time stamp is noted when translation is loaded from tape and included in all recent change history reports.

When a user requests a recent change history report, there could be other users concurrently issuing data commands and altering the contents of the transaction log. Therefore, if the user pages the entire way through the report, the oldest entries in the transaction log may have been overwritten by data commands issued by these other users. Should this occur, the final entries of the report will show the data commands which have been issued by these other users since the recent change history report was originally requested.

Use of the maintenance command "set time" to alter the system clock could make it look as if the recent change history report is not in true LIFO order.

A maximum of 250 commands are stored in the transaction log.

Output

NOTE:
The date listed in the header, refers to the last date on which a reset level 3 (COLD-1 restart) or greater took place. *This date is not updated* when translation is saved manually by command, or automatically by scheduled daily maintenance. Thus, it is usually *not* the date of the current translations.

```
Date of Loaded Translation:
```

Date	The date the command was issued. Format "mm/dd" where "mm" is the month and "dd" is the day.
Time	The time the command was issued. Format "hh:mm" where "hh" is the hour and "mm" is the minute.
Port	The port field indicates the port type to which the user was connected when the command was issued.

Port Type	List History Display
EPN Maintenance Board Port	MAINT
System Access Port	SYS-PORT
Maintenance Board Port	SYSAM-LCL
Remote Maintenance Board Port	SYSAM-RMT

Login — The login of the user performing the data command; for example "craft."

Actn — The first word (verb) of the command, specifying the operation to be performed. This field is truncated after four characters to allow enough space for objects and qualifiers. Four characters is enough to uniquely identify each action.

Object — The second phrase of the command specifying the particular thing being acted upon by the command.

NOTE:
Where the object is multiple words in length, only the first word will be displayed in the object field. All succeeding words will be treated as qualifiers. This field is truncated after twelve characters to allow enough space for qualifiers. Twelve characters is enough to uniquely identify each object.

Qualifier — One or more qualifiers which specify the characteristics of the action/object pair. This field is truncated after 31 characters to keep information for a command on a single line.

The following display shows a typical result when **list history** is entered.

```
list history                                  Page 1      SPE A

                              HISTORY

          Date of Loaded Translation: 12:10pm Thu Jun 4, 1992

 Date  Time Port      Login   Actn  Object       Qualifier

 6/05 14:55 SYSAM-LCL craft   enab  test-number  5
 6/05 14:54 SYSAM-LCL craft   set   vector       f
 6/05 14:31 SYSAM-LCL craft   rese  system       1
 6/05 14:29 SYSAM-LCL craft   set   vector       f
 6/05 14:27 SYSAM-LCL craf    disa  synchronizat
 6/05 14:26 SYSAM-LCL craft   enab  synchronizat
 6/05 14:20 SYSAM-LCL craft   enab  synchronizat
 6/05 14:19 SYSAM-LCL craft   disa  synchronizat
 6/05 14:19 SYSAM-LCL craft   clea  port         1c0308
 6/05 14:19 SYSAM-LCL craft   mark  port         1c0308
 6/05 14:18 SYSAM-LCL craft   clea  firmware-cou 3d21
 6/05 14:18 SYSAM-LCL craft   busy  pnc-standby
 6/05 14:16 SYSAM-LCL craft   clea  errors
 6/05 14:08 SYSAM-LCL craft   rel   trunk        1


  press CANCEL to quit --  press NEXT PAGE to continue
```

List ISDN-Testcall

list isdn-testcall [print | schedule]

The list isdn-testcall command displays the ISDN-PRI trunks that are currently in use for outgoing ISDN test calls.

Output

B-Channel	The trunk group number and member number of the trunk in use.
Start Time	Day of the month, hour and minute when the test call began.
Duration	Expected duration, in minutes, of the test call.
M/T Port	Cabinet, carrier, slot and circuit number of the port on the Maintenance/Test circuit pack in use for the outgoing test call.

The following display shows a typical result when **list isdn-testcall** is entered.

```
list isdn-testcall

                            ISDN-PRI TESTCALLS

      B-Channel    Start Time      Duration    M/T Port

      078/001      25/14:36        120         1B1102


Command successfully completed
```

List Marked-Ports

list marked-ports [print | schedule]

The list marked-ports command displays all of the ports that have been marked unusable with the mark port command.

Output

Port	The physical location (cabinet-carrier-slot-port circuit) of the marked port.
Board-Type	The type of circuit pack with the marked port.

```
list marked-ports

                    MARKED-PORT INFORMATION


        Port        Board-Type

        1C0101      DIG-BD
        1C0102      DIG-BD


Command successfully completed
```

List Measurements DS1

list measurements ds1 UUCSS [print | schedule]
list measurements ds1-log UUCSS [print | schedule]
list measurements ds1-fac UUCSSf [log | summary] [print | schedule]

The list measurements ds1 and list measurements ds1-log commands provide performance measurements on a DS-1 link. The **ds1** option provides a summary report while the **ds1-log** option provides a detailed report.

The performance measurements of a DS-1 link indicate the quality of the DS-1 physical interface between the system and a far end system.

The list measurements **ds1-fac** command provides link performance measurements on a DS1 Converter facility.

The DS1 Converter Complex consists of two DS1Cs connected by one to four DS1 facilities. This complex allows the distance between two port networks to

extend up to 100 miles, thereby extending the range of the optical fiber link within limited bandwidth (96 channels). A DS1C Complex can be used in a direct connectivity configuration or a Center Stage Switch configuration. The DS1 converters may be connected to an Expansion Interface(EI) or a Switch Node Interface(SNI) via a metallic connection.

Parameters

UUCSS	The location of a DS1 circuit pack.
UUCSS	The location of a DS1 converter facility where *UUCSS* is the location of the circuit pack and *f* is a letter (a-d) designating one of the four DS1 facilities.

Examples

list measurements ds1 2a18
list measurements ds1-log 2e01a
list measurements ds1-facility summary 2e01d schedule

Output

The following field descriptions pertain to the summary reports accessed by **list measurements ds1** and **list measurements ds1-facility summary**.

Counted Since:	The start time and date when the associated measurement counters were cleared, or when the DS1C circuit pack or facility was administered.
Number of Seconds Elapsed Into Current 15-min Interval:	The number of seconds from the beginning of the current 15-minute interval. This field has a value from 0 to 900.
Total of Valid 15-min Intervals in Past 24-hr Period:	The total number of 15-minute intervals in the past 24-hour period that contain valid data. This field has a value from 0 to 96.
Category	The following four fields report data form the error counters.
Errored Seconds	The value of the errored seconds counter for the specified 15-minute interval. This field has a value from 0 to 900 or N/A if the data for the 15-minute interval is invalid.

Bursty Err Secs	The value of the bursty errored seconds counter for the specified 15-minute interval. This field has a value from 0 to 900 or N/A if the data for the 15-minute interval is invalid.
Severely Err Secs	The value of the severely errored seconds counter for the specified 15-minute interval. This field has a value from 0 to 900 or N/A if the data for the 15-minute interval is invalid.
Failed Seconds	The value of the failed seconds counter for the specified 15-minute interval. This field has a value from 0 to 900 or N/A if the data for the 15-minute interval is invalid.
Worst 15-Min Interval	The date(Date), end time(Time), and error count (Count; from 0 to 900 in increments of four) of the 15-minute interval in the previous 24-hour period that contains the maximum value for each of the four error categories (errored seconds, bursty errored seconds, severely errored seconds, and failed seconds).
Total of 24-Hour Count	The sum of all valid 15-minute counts for the previous 24-hour period for each of the four error categories. This field has a value from 0 to 65535.
Current 15-Minute Interval	The error count for the current (incomplete) 15-minute interval for each of the four error categories. This field has a value from 0 to 899 or N/A if the data for the current 15-minute interval is invalid.

The following field descriptions pertain to the detailed reports accessed by the **list measurements ds1-log** and **list measurements ds1-facility log** commands.

Counted Since:	The start time and date when the associated measurement counters were cleared or the DS1C circuit pack was administered.
Date	The date of the 15-minute interval.
Time	The time of the 15-minute interval.
Errored seconds	The value of the errored seconds counter for the specified 15-minute interval. This field has a value from 0 to 900 or N/A if the data for the 15-minute interval is invalid.
Bursty err secs	The value of the bursty errored seconds counter for the specified 15-minute interval. This field has a value from 0 to 900 or N/A if the data for the 15-minute interval is invalid.

Severely err secs	The value of the severely errored seconds counter for the specified 15-minute interval. This field has a value from 0 to 900 or N/A if the data for the 15-minute interval is invalid.
Failed seconds	The value of the failed seconds counter for the specified 15-minute interval. This field has a value from 0 to 900 or N/A if the data for the 15-minute interval is invalid.
Valid interval	This field indicates whether the data for the specified 15-minute interval is valid. Data is considered valid when a count for that 15-minute interval. If the field has a value of ‘‘y’’, the data for the four error categories is valid; otherwise, the data is invalid. Data is considered valid when a count for that 15-minute interval is retrieved and none of the following invalid conditions occur. Data is invalid if a system warm start or a system cold start occurred during the interval, if the DS1C circuit pack was not inserted during the interval, if the system time was changed during the interval, or if the system was too busy to respond to a poll request for the interval.

The following output examples show all of the four different DS1 reports.

```
list measurements ds1 2a19                              SPE A

Switch Name:                    Date: 1:25 pm  THU APR 16, 1992

           DS-1 Link Performance Measurements Summary Report

    Counted Since: 1:20 pm  THU APR 16, 1992
    Number of Seconds Elapsed Into Current 15-min Interval: 323
    Total of Valid 15-min Intervals in Past 24-hr Period:   0

                                                  Total of  Current
                      Worst 15-Min Interval      24-hr     15-Min Int
    Category           Date     Time     Count     Count     Count

Errored Seconds         4/16     13:20       0         0         4
Bursty Err Secs         4/16     13:20       0         0         4
Severely Err Secs       4/16     13:20       0         0         0
Failed Seconds          4/16     13:20       0         0         0



Command successfully completed
```

```
list measurements ds1-facility summary 2e01a                    SPE A

Switch Name:                           Date: 1:26 pm  THU APR 16, 1992

           DS1C Link Performance Measurements Summary Report

    Counted Since: 10:50 am  THU APR 16, 1992
    Number of Seconds Elapsed Into Current 15-min Interval: 375
    Total of Valid 15-min Intervals in Past 24-hr Period:   10

                                                  Total of    Current
                       Worst 15-Min Interval       24-hr     15-Min Int
    Category          Date     Time     Count      Count     Count

Errored Seconds        4/16     10:50       0          0           0
Bursty Err Secs        4/16     10:50       0          0           0
Severely Err Secs      4/16     10:50       0          0           0
Failed Seconds         4/16     10:50       0          0           0



Command successfully completed
```

```
list measurements ds1-log 2a19                              SPE A

Switch Name:                          Date: 1:26 pm  THU APR 16, 1992

          DS-1 Link Performance Measurements Detailed Log Report

    Counted Since: 1:20 pm  THU APR 16, 1992

                    ERRORED   BURSTY     SEVERELY   FAILED   VALID
    DATE    TIME    SECOND    ERR SECS   ERR SECS   SECONDS INTERVAL

    4/16   13:05        0         0          0          0      y
    4/16   13:20        0         0          0          0      y









Command successfully completed
```

```
list measurements ds1-facility log 2e01a                  SPE A

Switch Name:                      Date: 1:26 pm  THU APR 16, 1992

          DS1C Link Performance Measurements Detailed Log Report

    Counted Since: 10:50 am  THU APR 16, 1992

                    ERRORED   BURSTY     SEVERELY   FAILED  VALID
    DATE    TIME    SECOND    ERR SECS   ERR SECS   SECONDS INTERVAL

    4/16   11:05        0         0          0          0      y
    4/16   11:20        0         0          0          0      y
    4/16   11:35        0         0          0          0      y
    4/16   11:50        0         0          0          0      y
    4/16   12:05        0         0          0          0      y
    4/16   12:20        0         0          0          0      y
    4/16   12:35        0         0          0          0      y
    4/16   12:50        0         0          0          0      y
    4/16   13:05        0         0          0          0      y
    4/16   13:20        0         0          0          0      y

Command successfully completed
```

List PMS-Down

list pms-down [start-time][stop-time][print]

This command lists all events that have meaning to the Property Management System (PMS) that have occurred while the link between the switch and the PMS was down. For example, any room status codes entered by hotel housekeeping staff during a time of PMS outage would be shown in this report.

Parameters

start-time	The starting time in 24-hour notation from which events are to be listed.
stop-time	The time in 24-hour notation up to which events are to be listed.

Output

Extension	The extension associated with the reported event.
Event	The PMS event that was reported to the switch, but which could not be sent to the PMS.
Reason	The reason that the event could not be reported by the switch to the PMS.
Time	The time at which the event was reported.

The following example shows a typical result when **list pms-down** is entered.

```
list pms-down

                 PROPERTY MANAGEMENT SYSTEM ACTIVITY

Extension    Event                Reason                 Time

 402     from room, code 1    PMS link out of service    7:00am
 405     from stn, code 1     PMS link out of service    9:00am
 411     check in, complete   PMS link out of service    9:30am
 411     PBX enabled MWL      PMS link out of service   12:00am
 450     from room, code 1    PMS reject                12:05am
```

List Sys-Link

list sys-link [print | schedule]

The list sys-link displays all of the system links. The location, link type and channel number, link state, current path status, faulted path status, and last recorded fault, if any, are displayed for each system link. See SYS-LINK in Chapter 9, "Maintenance Object Repair Procedures" for details.

Output

Location	The physical location of the far endpoint associated with the system link (cabinet-carrier-slot-circuit).
Link Type/Channel	The type of system-link and the processor channel number of the link (if there is one). System links include the following (see MO SYS-LINK): Expansion Archangel Links (EAL), Indirect Neighbor Links (INL), Processor Gate Control links (PGC), PRI signaling links (PRI), System Port links (SAP), Remote Neighbor links (RNL), Local Neighbor links (LNL), X25 adjunct links. Processor channel numbers range from 1 to 128.
State	Whether the system link is "up" or "down."
Current Path	This field specifies the status of the current path. This field displays "none" if the link is down or "present" if the current path is functional.
Faulted Path	This field shows whether the link has experienced a fault and been switched to another path. "Present" indicates that the link has been faulted at least once. "None" is displayed if the link has not gone down. "Default" is displayed if the default faulted path is being used.
Last Fault Recorded	The date and time that the most recent fault on the link took place.

The following display shows a typical result when **list sys-link** is entered on a system with 5 PNs and PNC duplication.

```
list sys-link                                        Page   1   SPE A

                      SYSTEM LINKS INFORMATION

Location  Link Type/  State  Current    Faulted   Last Fault
          Channel            Path       Path      Recorded

02A0101   EAL         up     present    present   12/30/1991 14:18
02B0201   EAL         up     present    none
03A0101   EAL         up     present    present   12/30/1991 12:56
03B0201   EAL         up     present    none
04A0101   EAL         up     present    present   12/30/1991 14:18
04B0201   EAL         up     present    none
05A0101   EAL         up     present    present   12/30/1991 12:56
05B0201   EAL         up     present    none
01E0201   LNL         up     present    none
01D0201   LNL         up     present    none
01E2001   RNL         up     present    none
02E0201   RNL         up     present    present   12/30/1991 14:18
02E0301   RNL         up     present    present   12/30/1991 14:18
02E2001   RNL         up     present    none

   press CANCEL to quit -- press NEXT PAGE  to continue
```

List Testcalls

list testcalls detail | summary

[grp group#] [to-grp group#]

[mem member#] [to-mem member#]

[port UUCSSpp] [result resultID| not-result resultID]

[count #] [print | schedule]

The list testcalls command generates reports of measurements made by the Automatic Transmission Measurement System (ATMS). ATMS makes test calls over analog trunks and compares performance measurements to administered thresholds in order to verify satisfactory transmission.

ATMS, the operation of this command, and the measurement reports are described in "Automatic Transmission Measurement System (ATMS)" in Chapter 6, "Additional Maintenance Procedures".

Mark Port

mark port UUCSSpp

The mark port command will identify a port as unusable by normal call processing. The port will be able to be tested, etc. but calls will not be attempted through the port. The marking of a port is saved as part of translation. The port can be restored to service by using the clear port command.

For more information see "Common Input Parameters" and "Common Output Fields" at the beginning of this chapter.

Monitor BCMS

monitor bcms split split# | system system# | skill skill#

The monitor bcms command displays output for agents and splits summarizing the Basic Call Management System (BCMS) condition. This on-line status report is automatically updated every 30 seconds or on demand by pressing UPDATE. The command is canceled by pressing CANCEL which results in termination of the login. Three display options are available: split, system and skill.

Parameters

split — This specifies display of status information for one particular split (ACD hunt group). The qualifier is followed by an ACD hunt group number (split number) that identifies the split to the switch.

system — This specifies display of split queue status as well as cumulative split information for all splits measured by BCMS. The qualifier is followed by ACD hunt group numbers (split numbers) separated by spaces and/or split number ranges separated by a hyphen ("-").

skill — This specifies display of status information for one particular skill group. The qualifier is followed by a skill number that identifies the group.

Examples

monitor bcms split 1
monitor bcms system 1 5 7 8 9
monitor bcms system 1-15

Output for the System Option

Date	The current date and time which is updated every 30 seconds or when the UPDATE key is pressed.
SPLIT	The name of the split being reported, if no name is administered then the split extension is displayed in the form 'EXTxxxxx". Splits are displayed in split number order. This field is translation data.
CALLS WAIT	The number of calls currently waiting in this split's queue. If any of these calls are Direct Agent Calls, the field will be preceded by an asterisk. This field is real-time status data.
OLDEST CALL	The amount of time that the oldest call has waited in queue. This field is real-time status data.
AVG ANSW SPEED	The average time required for an answer in this split during the current period, including time in queue and time ringing at the agent's voice terminal. Intraflow calls (those that overflow from one ACD split to another split) will not have queue time from previous splits included in the average. The calculation is Total Answer Time/Total Automatic Call Distribution (ACD) Calls. This is measurement data and includes only those calls that have completed.
AVAIL AGENT	The number of agents in this split currently available to receive an Automatic Call Distribution (ACD) call from this split. This field is real-time status data.
# ABAND	The number of calls that have abandoned during the current period. This field is measurement data.
AVG ABAND TIME	The average time abandoned calls waited in queue before abandoning during the current period. The calculation is Total Abandon Time/Total Calls Abandoned. This field is measurement data and includes only those calls that have completed (terminated).

# ACD	The number of Automatic Call Distribution (ACD) calls handled by this split during the current period. This includes calls that intraflow into the split. This field is measurement data.
AVG TALK	The average talk time for Automatic Call Distribution (ACD) calls handled by this split during the current period. This does not include ring time at the agents' voice terminal. The calculation is Total ACD Talk Time/Number of ACD Calls. This field is measurement data and includes only those calls that have completed (terminated).
AVG AFTER CALL	The average After Call Work (ACW) time for Automatic Call Distribution (ACD) calls handled by this split during the current period. ACD calls with no ACW time are included in the average. Time spent on direct incoming or outgoing calls while in ACW will not be included in the average. The calculation is (Total ACW Time - Total ACW Incoming Time - Total ACW Outgoing Time)/Total ACD Calls. This field is measurement data and includes only those calls that have completed (terminated).

The following display shows a typical result when **monitor bcms system** is entered.

```
monitor bcms system                                        Page   1 of   1
                                BCMS SYSTEM STATUS

                        Date:   14:02 THU OCT 17 1991

                         AVG                     AVG                   AVG
        CALLS  OLDEST   ANSW  AVAIL    #     ABAND   #    AVG    AFTER
SPLIT   WAIT    CALL   SPEED  AGENT  ABAND   TIME   ACD   TALK   CALL

Service   3    1:03     :45     0      3      :30   20    2:30   1:25
Sales     5     :33     :15     0     11      :45   36    1:32    :35
```

Output for the Split Option

Split:	The number of the split requested. This field is translation data.
Split Name:	The name of the split requested. If no name exists the split extension is displayed in the form ''EXT xxxxx''. This field is translation data.
Date:	The current date and time which is updated every 30 seconds or when the UPDATE key is pressed.
Calls Waiting:	The number of calls currently waiting in this split's queue. If any of these calls are Direct Agent Calls, the field will be preceded by an asterisk. This field is real-time status data.
Oldest Call:	The time in minutes:seconds that the current oldest call has waited in this split's queue. This field is real-time status data.
Staffed:	The number of agents currently logged into this split. This field is real-time status data.
Avail	The number of agents currently available to receive an Automatic Call Distribution (ACD) call in this split. Agents are in either the Auto-in or Manual-in work modes and are not currently on a call. If the agent is on another split's call or in After Call Work (ACW) for another split, this agent is not considered available and will not be recorded here. This field is real-time status data.
ACD	The number of agents in this split currently on an Automatic Call Distribution (ACD) call for this split. This includes ACD calls that are being handled by this split that arrive as coverage from another split. This field also includes outbound calls (Outgoing Call Manager) that are distributed through the ACD. Note that if an agent puts an ACD call on hold, but does not enter another state (for example, the agent does not enter the AVAIL state), the agent will still be seen as in the ACD state. This field is real-time status data.
ACW	The number of agents in this split currently in After Call Work (ACW) split. This field is real-time status data.
AUX	The number of agents in this split currently in AUX work for this split. If an agent is on another split's call or in After Call Work (ACW) for another split, this agent is not considered in AUX work and will not be recorded here. This field is real-time status data.

Extn	The number of agents in this split currently on non-ACD (Automatic Call Distribution) calls, either incoming or outgoing directly to/from their extensions. If the agents are also in After Call Work (ACW) or AUX they will be recorded as Extn rather than ACW or AUX. This field is real-time status data.
OtherSplit	The number of agents in this split on another split's call or in After Call Work (ACW) for another split. Only used if agents belong to multiple splits. This field is real-time status data.
AGENT	The name of the agent associated with the extension. If no name exists this field will be left blank. This field is translation data.
EXT	The agent's extension. This field is translation data.
STATE	The current state of the agent for this split. This possible states are Avail, ACD, ACW, AUX, Extn In, Extn Out, OtherSplit, and Unstaff. If an agent is staffed, the agent must also be in one of the above states. This field is real-time status data.
TIME	The clock time at which the agent entered the current state. This field is real-time status data.
ACD CALLS	The number of Automatic Call Distribution (ACD) calls (inbound and outbound), that the agent has completed for this split during the current period (half hour or hour). The maximum number of calls is 255, and if this maximum is exceeded, 255 is displayed. This field is measurement data.
EXTN IN CALLS	The number of non-ACD incoming calls that the agent has received and completed during the current period. The maximum number of calls displayed is 255. This field is measurement data.
EXTN OUT CALLS	The number of outgoing non-ACD (Automatic Call Distribution) calls that the agent has completed during the current period. The maximum number displayed is 255. This field is measurement data.

The following display shows a typical result when **mon bcms spl 1** is entered.

```
monitor bcms split 1                                Page   1 of   1   SPE A
                       BCMS SPLIT (AGENT) STATUS

        Split: 1
   Split Name: hunt group 1               Date:   9:02 TUE OCT 22 1991
Calls Waiting:    0
  Oldest Call: 0:00

0=Staffed   0=Avail  0=ACD   0=ACW   0=AUX   0=Extn       0=OtherSplit

AGENT         EXT      STATE      TIME       ACD     EXTN IN  EXTN OUT
                                              CALLS     CALLS     CALLS
```

Monitor Health

monitor health

The monitor health command displays the same information as the **status health** command and updates the display automatically every minute. The command is terminated by pressing Cancel. When the command is canceled, the management terminal login is dropped. See **status health** for a description of the fields displayed.

Monitor Security Violations

monitor security-violations [print]

The monitor security-violations command displays the following information about failed attempts to access the system: the time of the violation, the login entered, and the port accessed during the failed login attempt. For remote access violations, the trunk group number, member, and extension are also shown. A total of 16 entries are maintained for each type of access. The report is automatically updated every 30 seconds until the command is canceled by pressing CANCEL. Unlike some other monitor commands, canceling does not cause the terminal to be logged off.

Output

Date	The date of the security violation given as MM/DD.
Time	The time of the logged security violation given as HH:MM.
Login	The login ID that was entered as part of the violation attempt.

SYSTEM MANAGEMENT VIOLATIONS

Port Type	The type of port through which the login violation was attempted: SYS-PORT A dial-in connection to a system port. MAINT A physical connection to the G3-MT terminal connector on an EPN maintenance circuit pack. SYSAM-LCL A physical connection to the ACTIVE terminal connector on the SYSAM circuit pack in a PPN control carrier. SYSAM-RMT A connection to the Remote Access Port (RAP) on the SYSAM circuit pack. This port is usually accessed by dialing in and is reserved for use by INADS.
Ext	The extension assigned to the data module that was used to attempt the failed login. If a data module was not used (as in the case of dedicated EIA connections, for example) the field is blank.

REMOTE ACCESS VIOLATIONS

TG No.	The trunk group that carried the incoming remote access attempt (remote access violations only).
Mbr	The trunk group member number associated with the trunk from which the remote access attempt terminated (remote access violations only).
Ext	The extension used to access the RAP (remote access violations only).

The following display was produced by entering "monitor security-violations".

```
monitor security-violations                                          SPE A

                           SECURITY VIOLATIONS STATUS
                                                Date:   9:12 MON DEC 30 1991
  SYSTEM MANAGEMENT VIOLATIONS                     REMOTE ACCESS VIOLATIONS

Date   Time  Login  Port Type   Ext      Date   Time   TG No.
Mbr  Ext
12/30  09:12 init   SYSAM-LCL           12/30  12:42  80      1    1111
12/30  09:12 init   SYSAM-LCL
12/30  09:12 init   SYSAM-LCL
```

Monitor System

monitor system view1 | view2

The monitor system command displays a page of output summarizing the condition of the system. Attendant and maintenance status fields are updated every minute, and traffic status is updated hourly until the command is canceled with the CANCEL key. When the command is canceled, the terminal is logged off.

Two displays are available. "View1" displays attendant, maintenance, and traffic status. The "view2" report contains everything the "view1" report does, except hunt group measurements are omitted from the traffic status section. These forms contain simplified high-level information from which a basic picture of the system's health can be drawn.

Parameters

View1	This specifies a form that includes attendant status, maintenance status, measurements of trunk groups, hunt groups, and the attendant group for the last hour, and time of day.
View2	This form is the same as View1 form except that the last hour's hunt group measurements are omitted,

Output

Console no.	The identifying number of the attendant console.
Activated:	The attendant console is in service. An attendant console is considered activated if its handset/headset is plugged in, it is not busied out, and the system is in day service and the console is a day or day/night or principle console, or the system is in night service and the console is a night or day/night console.
Deactivated:	The attendant console is not in service. The attendant console is considered deactivated if it does not meet the previous activated conditions.
# of alarms for trunks	The total number of existing minor and major alarms on trunk ports.
# of alarms for other resources	The total number of existing minor and major alarms on all maintainable objects in the system except trunks and stations.
INADS has been informed?	Whether alarms been reported and acknowledged by INADS. When Alarm Origination is not enabled, or if there are no active alarms, this field displays ''n''.
Measurement Hour	The starting time of the period for which the measurement was taken. For example, if the measurement hour is shown as 1800, it means the traffic status data displayed is for the time period from 6 PM to 7 PM (The measurement is taken on an hourly basis).
Grp no	A number between 1 and the maximum trunk group number or maximum hunt group number in the system.
Grp dir	Group direction: incoming, outgoing or two way.
Calls qued	Total calls that arrived and were placed in the queue for trunk groups.
Calls aban	Total calls that were abandoned by the caller.

%Out blkg: The ratio of outgoing calls that are not carried (due to overload conditions) on a trunk group to the outgoing calls offered.

% Time ATB: The percentage of time within the polling interval that all trunks in the trunk group were unavailable for use.

Time of day The current time of day acquired from the system.

The following display shows a typical result when **mon sys view1** is entered.

```
monitor system view1

            ATTENDANT STATUS                      MAINTENANCE STATUS

               Console no.
               # of alarms for trunks: 4
     Activated: 1                            # of alarms for stations: 2
   Deactivated:                             # of alarms for other res: 1
                                              INADS has been informed? n


                            TRAFFIC STATUS
                         Measurement Hour: 1800

     Trunk Group Measurement              Hunt groups Measurement

(4 grps with highest %time ATB)    (4 grps with highest # of qued calls)
    Grp no: 78                                      Grp no: 16
   Grp dir:                                     Calls queued: 2
Calls queued: 1                                     Calls aban: 1
 %Out blkg:                                 Attendant Group Measurement
 %Time ATB:                               Calls qued: 1     Calls aban: 0


                                                 19:07 G3-MT DEC 31 1988


                  - press CANCEL to quit -
```

The following display shows a typical result when **mon sys view2** is entered.

```
monitor system view2
                ATTENDANT STATUS                    MAINTENANCE STATUS

                   Console no.
                # of alarms for trunks: 4
    Activated: 1 2 3 4 5 6                  # of alarms for stations: 2
  Deactivated: 7 8                         # of alarms for other res: 1
                                             INADS has been informed? n


TRAFFIC STATUS  Measurement Hour: 1800
          Trunk Group Measurement
(4 grps with highest %time ATB)
    Grp no: 78
   Grp dir:
Calls qued: 1
 %Out blkg:
 %Time ATB:
          Attendant Group Measurement
Calls qued: 1     Calls aban: 0
                                                 19:07 G3-MT DEC 31 1988
                 - press CANCEL to quit -
```

Monitor Traffic

monitor traffic trunk-groups [group#]
monitor traffic hunt-groups

The monitor traffic command shows the current load on specified trunk and hunt groups and the length of time that the oldest call in the group has been waiting.

Parameters

trunk-groups	The trunk group report displays the number of calls in the queue waiting to be serviced for each trunk group. The total number of members in the group and the number of members active on calls are displayed for comparative analysis. Only administered trunk groups up to a maximum of 60 are displayed. You can specify the starting trunk group. For example, if you enter 5, trunk groups from group 5 up are displayed.
hunt-groups	The hunt-group report is similar to the trunk-group report. In addition to the information contained in the trunk-group report, this report displays how long the oldest call in each group's queue has been waiting. The display is updated every minute. refreshed. Fields are blank for unadministered hunt groups.

Output

#	Group number for the trunk or hunt group.
S	The size (number of members administered) of each trunk or hunt group.
A	The number of members in a group that are active on a call. This does not include members which have been busied out.
Q	The length of the queue administered for a group.
W	The number of calls waiting in the group queue to be serviced.
LCIQ	The longest call in queue (LCIQ) indicates the time in seconds the oldest call in the hunt group queue has been waiting to be serviced.

The following display shows a typical result when **mon tr hu** is entered.

```
monitor traffic hunt-groups

                              HUNT GROUP STATUS     22:49 G3-MT DEC 31 1988
          #   S   A   Q   W   LCIQ            #   S    A   Q   W  LCIQ

          1   15  10  10  0   20              17
          2                                   18
          3                                   19
          4                                   20
          5                                   21
          6                                   22
          7                                   23
          8                                   24  10   5   0   0   10
          9                                   25
          10                                  26
          11                                  27
          12                                  28
          13                                  29
          14                                  30
          15                                  31
          16                                  32
(#: Group;  S: Grp Size;  A: Active Members;  Q: Q Length;  W: Calls Waiting)
(LCIQ: Longest Call In Queue in seconds
```

The following display shows a typical result when **mon tr tr** is entered.

```
monitor traffic trunk-groups

                              TRUNK GROUP STATUS     22:49 G3-MT DEC 311988
    #  S  A  Q  W    #  S  A  Q  W    #  S  A  Q  W    #  S  A  Q  W


    1  15 10 0  0
    2  22 21 10 10
    9  31 12 20 0
    65 5  5  10 8
    99 12 0  0  0


(#: Group;  S: Grp Size;  A: Active Members;  Q: Q Length;  W: Calls Waiting)
```

Monitor Trunk

monitor trunk group# / member#

This command displays the same information as the **status trunk** command and updates the data automatically every minute or on demand. To manually update the display, press UPDATE (f6 on most terminals). Press CANCEL to cancel the command. Unlike some monitor commands, the terminal login is not dropped when you cancel the command.

Input parameters and screen output are the same as those for **status trunk**.

Recycle Carrier

recycle carrier UUC

The recycle carrier command turns power off, then back on, on a specific carrier. When a power unit is replaced in a carrier, this command must be entered to restart the power on that carrier. The following carriers cannot be recycled:

- PPN Control Carrier (active or standby)
- Switch Node Carrier
- EPN Control Carrier
- Any carrier holding an active Tone-Clock or an active Expansion Interface circuit pack

CAUTION:
When a port carrier is recycled, all ports and adjuncts supported by circuit packs on that carrier undergo a service outage.

CAUTION:
Never recycle power to a carrier containing DEFINITY AUDIX TN566/TN2169 circuit packs without first shutting down the AUDIX system. Doing so can damage AUDIX software. Follow instructions on the TN566/TN2169 faceplate (these also appear under ADXDP-PT in Chapter 9, "Maintenance Object Repair Procedures"*). On G3r V1 systems, the TN566/TN2169 may appear as a TN746 with a vintage greater than 50.*

For more information see "Common Input Parameters" and "Common Output Fields" at the beginning of this chapter.

Release Commands

release board UUCSS
release maintenance-name [address]

Release commands release specified maintenance objects from the maintenance busyout state and puts them back into service, assuming the health of the component(s) permits. Hardware tests specific to the maintenance object are performed to verify that it is functioning.

For each maintenance object, the release command is entered in the same fashion as the associated busyout command, except that the word **release** is

entered instead of **busyout**. See the description of the related busyout command for details of command syntax.

If a release command is entered for an object that is not busied out, the command will abort. Some release commands trigger recovery actions by the system, such as the refresh of a standby PNC or SPE. See the description of the related busyout command for details of command execution and interactions.

Parameters

Input parameters consist of specifying the location, if required, of the given maintenance object. Use the same format as that used for the related busyout command.

Examples

release board 01c11
release data-module 310
release tone-clock 2a
release ds1-fac 02e01a
release fiber-link 13
release standby-spe

Output

The identity of the maintenance object and the result of command execution is displayed on a screen form similar to the related busyout screen. When the command aborts or fails, an error code indicating the reason is displayed. See "Common Abort and Fail Codes" at the beginning of this chapter.

The following display shows a typical result when **release board 01c07** is entered.

```
release board 01C07

                              COMMAND RESULTS

Port       Maintenance Name  Alt. Name    Result   Error Code

01C07      ANL-BD                         PASS
01C0701    ANL-LINE          5409         PASS
01C0702    ANL-LINE          5416         PASS
01C0703    ANL-LINE          5421         PASS




Command successfully completed
```

Reset Board

reset board UUCSS [repeat #]

CAUTION:
This command can be service disrupting and may cause extraneous alarms. Effects of a reset vary depending upon the type of object being reset and upon whether the component is duplicated. Consult the section in Chapter 9, "Maintenance Object Repair Procedures" *on the relevant maintenance object for details.*

When a port circuit pack is specified, the reset board command performs a software reset of every administered port on the circuit pack. All ports must be busied out before the port circuit pack is reset.

On Critical Reliability systems (duplicated PNC), reset of an Expansion Interface, Switch Node Interface, Switch Node Clock, or DS1 Converter circuit pack on the active PNC is not permitted. Standby components must first be busied out before entering the reset.

Cabinet number and repeat both default to 1. For more information see "Common Input Parameters" and "Common Output Fields" at the beginning of this chapter.

Reset Disk

reset disk [C]

This command resets the disk device, queries the device for ID, size and other information, and initiates self-testing by the device. Upon successful completion, all alarms on that disk are cleared and the device is returned to service.

The cabinet is always **1** and need not be entered. On systems with duplicated SPEs only, carrier **a** or **b** must be entered.

Failure of the reset command places the disk in the uninstalled state. All system access to the disk, including demand testing, is prevented except for demand resets.

When the host-adapter is busied out, only the demand busyout and test commands are permitted on the attached disk. Reset, release, scheduled and periodic testing and other system software access are blocked. In this case, the host-adapter must first be released before the disk can be released.

When the host-adapter is taken out of service due to test or reset failures, and becomes uninstalled, the disk is also placed in the uninstalled state and all access by system software, including resets, is blocked.

Reset Fiber-Link

reset fiber-link fiber# [a-pnc | b-pnc]

CAUTION:
The reset fiber-link command is destructive on standard and high reliability systems (simplex PNC), and may cause an entire port network to be removed from service.

This command resets the Expansion Interface and/or Switch Node Interface circuit packs that are endpoints of a specified fiber link, dropping the link in the process.

A fiber link must be busied out before being reset. To busyout a fiber on critical reliability systems, the fiber must be on the standby PNC and the standby PNC must first be busied out. See **busyout fiber-link** for associated interactions.

The **list fiber-link** command displays a list of fiber links and their locations.

Parameters

fiber#	The administered number of the fiber link (1-27). On critical reliability systems (duplicated PNC), this number designates a fiber link pair; the following qualifier specifies which fiber in the pair is to be reset.
a-pnc, b-pnc	On critical reliability systems (duplicated PNC), this distinguishes between the two fibers in a duplicated pair. On systems with simplex PNC this is always a-pnc and need not be specified.

Examples

Simplex PNC: reset fiber-link 1
Duplex PNC: reset fiber-link 1

Reset Host-Adapter

reset host-adapter C

This command resets and initializes the host-adapter circuit on the MSSNET circuit pack. Upon successful completion, the host-adapter is put into service and all alarms active for that host-adapter circuit are cleared.

The cabinet is always 1 and need not be specified. Carrier a or b must be specified only on systems with duplicated SPEs.

This command will abort if any other MSS operation has already begun.

Failure of this command will place the host-adapter in the uninstalled state, preventing all maintenance testing, including demand testing, of the failed host-adapter. The reset must pass to put the host-adapter back into service.

When the host-adapter is taken out of service due to failures of its tests, or fails a reset and becomes uninstalled, the attached tape and disk are also placed in the uninstalled state and all access by system software, maintenance tests and commands including reset are blocked from execution.

Reset Maintenance

reset maintenance UUC

This command performs a reset on a specified maintenance circuit pack. Specifying cabinet 1 resets the PPN SYSAM circuit pack on the selected carrier, dropping any remote or local logins. Specifying cabinets 2 through 22 resets the EPN maintenance circuit pack in the 'a' carrier of the specified cabinet, dropping any local login to that circuit pack.

The cabinet number defaults to 1. The carrier must be specified only for PPNs with duplicated SPEs.

Reset Packet-Interface

reset packet-interface C [S]

CAUTION:
Resetting a packet interface is disruptive under the following conditions:

- On all standard reliability systems (simplex SPE)
- When SPEs in a duplicated system are locked, or handshake is down, and the active packet interface is reset.
- When the standby SPE in a duplicated system has a state of health lower than the active, and the active packet interface is reset.

CAUTION:
In the above cases, call service throughout the system is disrupted, the terminal is logged off and all EPNs are unavailable during the reset interval. A minor alarm is logged against the circuit pack to be reset. This lowers the state of health of the associated SPE and may cause a spontaneous SPE interchange in duplicated systems.

This command resets and initializes the packet interface circuit pack hardware and firmware. The actual sequence of operation depends on the type and status of the SPEs.

When an active packet interface is reset, its links are dropped and reassigned to the remaining in-service packet interface circuit packs. These links are not migrated back to the packet interface after the reset. A level 2 (Cold-2) or greater system restart is required to redistribute the links equally among all active packet interfaces, including the one that was reset.

Simplex SPE

For standard reliability systems the specified packet interface circuit pack is simply reset. Failure of the reset can lead to the circuit pack being placed in the out-of-service state. When a packet interface is out of service, scheduled, periodic, error and demand testing of the circuit pack is prevented and it is not used for links. The circuit pack returns to the in-service state upon passing the reset. A level 2 (Cold-2) or greater system restart is then performed to distribute the links equally among the available packet interface circuit packs.

Duplicated SPE Standby Packet Interface

Reset of a packet interface on the standby SPE does not disrupt service and results in a reset of all packet interfaces on the standby SPE. The following conditions are necessary:

- Handshake communication is up.
- The SPE carriers are not locked with the SPE-Select switches.

The following sequence occurs:

1. Memory shadowing is turned off.
2. All standby packet interfaces are reset.
3. If the reset succeeds, shadowing is turned on, memory refresh initiated, and the packet is put into the standby state.
4. If the reset fails, the circuit pack is put into the out-of-service state, lowering the standby SPE's state-of-health.

Duplicated SPE Active Packet Interface

Standby SPE available

When a packet interface on the active SPE of a duplicated system is specified, a spontaneous SPE interchange is first performed by the system, assuming that:

- The SPE carriers are not locked with the SPE-Select switches.

- Handshake communication is up.
- The state of health of the standby SPE is not lower than that of the active.

If these conditions are met, the interchange places the active SPE into the standby state, and then all standby packet interfaces are reset as in the above case. Links are not disrupted, but due to the interchange transient calls are dropped and the terminal is logged off.

Standby SPE not available

If any of the three conditions listed above are not met, an SPE interchange is prevented and the active packet interface is reset, resulting in disruption of all links associated with the circuit pack (see the Caution above). When the interchange is prevented by lower state of health of the standby, the standby packet interfaces are also reset according to the sequence listed above.

Parameters

C, CS	The cabinet is always 1 and need not be specified. Carrier a or b must be specified only for duplicated SPEs. The slot number (1-3) designates one of the dedicated PKT-INTFC slots on the PPN control carrier and defaults to the lowest-numbered slot with a packet interface installed in it.

Reset PNC Interchange

reset pnc interchange [override-and-lock]

NOTE:
This command does not work like other reset commands. Instead of resetting or initializing hardware, a PNC interchange is executed. Before entering this command, look at the states of health of the two PNCs with **status pnc**.

This command executes a PNC interchange on a Critical Reliability system (duplicated PNC). The standby PNC becomes active and assumes control of active call processing, and the active goes to standby. If the health of the standby PNC is the same as or better than that of the active, no service disruption takes place; all stable calls and links are preserved. Some unstable calls may drop.

Both demand and spontaneous PNC interchanges are prevented by the following conditions:

- The standby PNC is busied out.
- The PNCs are locked by means of the **set pnc lock** or **reset PNC override-and-lock** commands.

- For five minutes after a spontaneous PNC interchange, or for 30 seconds after a demand interchange, an anti-thrashing mechanism prevents subsequent interchanges unless the override-and-lock option is used.
- If the state of health of the standby PNC is worse than that of the active, the command will abort unless the override-and-lock option is used.
- If the standby PNC has not completed a global refresh since it was last initialized or released, the reset will abort unless the override-and -lock option is used.

Note the following caution regarding the use of the override-and-lock option.

See **status pnc** for details of how to obtain and interpret the states of health and other current information about the PNCs. For a more complete explanation of PNC duplication and interchanges, see PNC-DUP in Chapter 9, "Maintenance Object Repair Procedures".

Parameters

interchange	"interchange" (without a preceding hyphen) must be specified on the command line.
override-and-lock	This option is also used to override the anti-thrashing mechanism. Subsequent PNC interchanges are prevented, regardless of changes in the states health of the PNCs. Double call setup still takes place; each call is set up on both PNCs. To unlock the PNCs, use **set pnc unlock**.

CAUTION:
This option forces execution of the interchange regardless of the state of health of the standby, possibly disrupting service.

Output

One of the following messages is displayed:

```
Command successfully completed
```

If the reset pnc interchange command is unsuccessful due to the state of health of the standby Port Network Connectivity, operation of anti-thrashing, or the following message will be displayed:

```
Interchange of pnc failed;
try again using the 'override-and-lock' identifier
```

See the preceding caution regarding use of the override-and-lock option. If the reset pnc interchange command is unsuccessful due to a busyout of the standby PNC, the following message will be displayed:

```
Must release port network connectivity first
```

!**reset pnc interchange [override-and-lock]**

NOTE:
This command does not work like other reset commands. Instead of resetting or initializing hardware, a PNC interchange is executed. Before entering this command, look at the states of health of the two PNCs with **status pnc**.

This command executes a PNC interchange on a Critical Reliability system (duplicated PNC). The standby PNC becomes active and assumes control of active call processing, and the active goes to standby. If the health of the standby PNC is the same as or better than that of the active, no service disruption takes place; all stable calls and links are preserved. Some unstable calls may drop.

Both demand and spontaneous PNC interchanges are prevented by the following conditions:

- The standby PNC is busied out.
- The PNCs are locked by means of the **set pnc lock** or **reset PNC override-and-lock** commands.
- For five minutes after a spontaneous PNC interchange, or for 30 seconds after a demand interchange, an anti-thrashing mechanism prevents subsequent interchanges unless the override-and-lock option is used.
- If the state of health of the standby PNC is worse than that of the active, the command will abort unless the override-and-lock option is used.
- If the standby PNC has not completed a global refresh since it was last initialized or released, the reset will abort unless the override-and -lock option is used.

Note the following caution regarding the use of the override-and-lock option.

See **status pnc** for details of how to obtain and interpret the states of health and other current information about the PNCs. For a more complete explanation of PNC duplication and interchanges, see PNC-DUP in Chapter 9, "Maintenance Object Repair Procedures".

Parameters

interchange	"interchange" (without a preceding hyphen) must be specified on the command line.
override-and-lock	This option is also used to override the anti-thrashing mechanism. Subsequent PNC interchanges are prevented, regardless of changes in the states health of the PNCs. Double call setup still takes place; each call is set up on both PNCs. To unlock the PNCs, use **set pnc unlock**.

CAUTION:
This option forces execution of the interchange regardless of the state of health of the standby, possibly disrupting service.

Output

One of the following messages is displayed:

```
Command successfully completed
```

If the reset pnc interchange command is unsuccessful due to the state of health of the standby Port Network Connectivity, operation of anti-thrashing, or the following message will be displayed:

```
Interchange of pnc failed;
try again using the 'override-and-lock' identifier
```

See the preceding caution regarding use of the override-and-lock option. If the reset pnc interchange command is unsuccessful due to a busyout of the standby PNC, the following message will be displayed:

```
Must release port network connectivity first
```

Reset Port-Network

reset port-network PN# level [1 | 2]

CAUTION:
A reset of level 2 is destructive, causing all calls and application links on the specified EPN to drop. EPN resets are described under EXP-PN in Chapter 9, "Maintenance Object Repair Procedures"*.*

This command resets a specified port network to a specified level. This does not cause an interchange on a system with duplicated PNC. The command will not execute on the PPN, or on an EPN whose fiber link to the PPN or CSS is down.

Parameters

PN#	Port network number Use **list cabinet** to find the PN number(s) associated with a given cabinet.
level 1 | 2	Reset level 1 (WARM restart) is used to restart an EPN that is still fully or partially in service. All stable calls are preserved, and full service is restored within 35 seconds. Reset level 2 (COLD restart) results in reset, removal, and reinsertion of all EPN circuit packs. It is used to recover an EPN that has been taken out of service. Level 2 restarts should take less than two minutes. All calls and application links with an endpoint in the EPN are dropped. If two level 2 resets within an hour fail to return the EPN to service, EPN Emergency Transfer is invoked. (EPN Emergency Transfer will already be in effect if the link to the EPN has been down for more than one minute).

Examples

reset port-network 10 level 2

Output

Port The PN number of the reset EPN.

For more information see "Common Abort and Fail Codes" and "Common Output Fields" at the beginning of this chapter. The following display shows a typical result when **reset port-network 4 lev 1** is entered

```
reset port-network 4 level 1

                                  TEST RESULTS

Port      Maintenance Name  Alt. Name  Test No.  Result  Error Code

04        EXP-PN                       956       PASS



Command Successfully Completed
```

Reset SPE-Standby

reset spe-standby level# [tape]

This resets the standby Switch Processing Element (SPE) on a system with duplicated SPEs to a specified level. The command is increasingly destructive as the reset level increases.

On a system with disk and tape devices, the reset is executed using the boot image stored on disk unless a reset of level 4 (reboot) with the "tape" qualifier is requested.

During the reset, the standby SPE is taken out of service for several minutes. The progress of the reset can be monitored with the **status spe** command.

During a reset of any level, memory shadowing is turned off. After the reset completes, memory shadowing is automatically restored and a memory refresh of the standby takes place. The standby is not fully in service until the refresh is complete.

Reset spe-standby invokes initialization of the standby in the same fashion as low level maintenance. The reset level requested will not be escalated by software. The level requested will always be the level that is performed.

Any reset of the standby SPE turns off shadowing, leaving the standby SPE unrefreshed. It may take several minutes before the standby is available for service.

Parameters

level# This specifies the level of reset to be executed, from 1 to 5:

Tape	Recovery
1	Warm Restart
2	Cold-2
3	Cold-1
4	Reboot
5	Extended Reboot

Tape Valid only for a reset of level 4, this specifies a reboot using the boot image stored on tape instead of disk.

Output

The message: `Command successfully completed` indicates that the reset has been initiated. Execution and recovery can take several minutes.

Reset System

reset system [level# | interchange] [disk | tape] [contention-override]

CAUTION:
All system resets (except planned interchanges) are service affecting, with higher levels being increasingly destructive. Some resets may take up to one half hour to complete (see Chapter 4, "Initialization and Recovery"*). Certain conditions may result in a higher reset level than the one requested. Unless you are experienced with resetting a system, follow normal escalation procedures.*

NOTE:
reset system interchange, used to switch control of the system from an active SPE to the standby, is discussed separately under its own heading.

This command resets a Switch Processing Element (SPE) at a specified level that is increasingly disruptive as the reset level increases. These effects are described in Chapter 4, "Initialization and Recovery". *All system resets (except reset system interchange) are disruptive and terminate the G3-MT login.*

When the command is entered, the MSS devices are checked to see if they are currently in use. If any command or maintenance process that accesses the MSS is in progress, the reset is denied and a message is displayed. In this case, the "contention-override" option is required to force the reset. This check prevents aborting of a **save translation** or other MSS process.

If the vector bit is set to trigger a core dump for the specified reset level, a copy of system memory is first written to the primary MSS device. The system then clears the vector and proceeds with the request. If the vector is set for an active SPE core dump for reset level 1 a reset level 2 will be performed to recover the Packet Interface links. See the **get vector** command.

System software will generally not escalate a demand system reset to a higher level. There are certain conditions that result in a higher level reset than that requested. These include the following:

- The vector is set to trigger a core dump on the active SPE in the event of a level 1 reset.
- A PNC interchange is already in progress.
- A change in translation administration is in progress.

Reset levels greater than 1 turn off shadowing in a duplicated system, and leave the standby SPE in an unrefreshed condition for several minutes.

Parameters

Level — Reset levels are numbered as shown in the following table. The execution times listed are *approximations*.

Approximate Recovery Time for System Resets (min:sec)

Level	Recovery	2,400 lines		5,000 lines		15,000 lines	
		Tape	Disk	Tape	Disk	Tape	Disk
1	Warm Restart	:10	:10	:10	:10	:10	:10
2	Cold-2	1:00	1:00	2:00	2:00	4:00	4:00
3	Cold-1	3:00	2:00	5:00	3:00	11:00	7:00
4	Reboot	12:00	4:00	15:00	6:30	23:00	11:00
5	Extended Reboot	15:00	7:00	18:00	10:00	25:00	15:00

Interchange — See **reset system interchange**

Health-override — See **reset system interchange**

Disk — Valid only for reset level 4, this specifies use of the boot image stored on disk for the reboot. Disk is the default device.

Tape — Valid only for reset level 4, this specifies use of the boot image stored on tape for the reboot.

Contention-override — Contention control aborts the reset system command if any other command is currently running. The **contention-override** option forces other processes to abort, allowing the reset to proceed.

Examples

reset system 1
reset system 4 tape contention-override

Output

Once this command is entered, it may not be canceled. The screen will display the results of various initialization tests, as described in Chapter 4, "Initialization and Recovery". If the reset command is successful the user will be logged off (except for **reset system interchange**). Several conditions may prevent a requested reset. If the reset fails and the message displayed is not self-explanatory, use **status spe** to determine what caused the failure.

Reset System Interchange

reset system interchange [health-override][contention-override]

CAUTION:
Although this command is normally not disruptive, certain conditions may escalate the interchange to a higher reset level.

This command is used to switch control from the currently active SPE to the standby. This type of interchange is called a planned, soft, demand or requested interchange. Interchanges caused by hardware faults or the SPE-Select hardware switches are called spontaneous or hard interchanges. Planned interchanges are discussed under:

— "SPE Duplication" in Chapter 1, "Maintenance Architecture"

— "Executing a Planned SPE Interchange" in Chapter 5, "Responding to Alarms and Errors"

— STBY-SPE in Chapter 9, "Maintenance Object Repair Procedures"

This operation is not disruptive if the state of health of the standby SPE is "functional". If this condition is not met, system software will normally abort a requested interchange. When this is the case, the **health-override** option can be specified to try to force a *spontaneous* (hard) interchange.

CAUTION:
Use of health-override may cause serious service disruption.

Once a planned interchange has been initiated, it cannot be aborted with the CANCEL key.

A **reset system interchange** command will abort for the following reasons:

- If the standby SPE is down
- If the SPEs are locked by means of the SPE-Select switches
- If communication to the standby SPE is not possible (handshake is down)
- If shadowing to the standby SPE is not turned on
- If the standby SPE is not fully refreshed
- If the State-of-Health of the standby is not "functional"
- There is an SCD dual-port RAM failure
- If there is any Mass Storage System activity
- If Packet Interface link migration fails
- If a minor or major alarm is logged against the standby SPE's SYSAM or Packet Interface circuit packs

- If the standby SPE is busied out

The destructiveness of an interchange that fails depends on how far the interchange proceeds before it fails. A non-destructive recovery should occur if an interchange is aborted before link migration has started. If the interchange fails after link migration has started, the system will perform a WARM restart to recover.

The SPE-Select switches located on the Duplication Interface circuit packs override any demand maintenance activities. If the SPEs are locked by means of these hardware switches, an interchange cannot take place until the switches are unlocked.

If a planned interchange aborts or fails, an error will be logged against SYSTEM, signaling that the expected interchange has not occurred. In this case, the reset may be escalated by software. This condition is described in *Failure of Planned Interchange* in Chapter 5, "Responding to Alarms and Errors".

If **reset system interchange override** is specified while a PNC interchange is occurring, a spontaneous (hard) SPE interchange will occur which results in a Cold restart. After the restart, the active PNC will be the one that was being switched into before the restart.

If a requested SPE interchange fails, an error conveying additional information about the failure will be logged against the SYSTEM maintenance object.

Parameters

health-override	If a planned (demand) interchange fails for any of the previously listed reasons, this option can be specified to try to force a switch to occur. This option causes the active SPE's state of health to be downgraded as much as possible in order to allow a spontaneous (hard) switch to occur. However, if the standby SPE's state of health is still not better than that of the active, or if the SPEs are locked, the interchange will still not occur.
contention-override	Due to contention control, **reset system interchange** aborts if any other command is currently running. Use of this option overrides contention control and forces the command to execute regardless of whether other commands are currently running.

Output

Once this command is entered, it may not be canceled. The screen will display the results of various initialization tests, as described in Chapter 4, "Initialization and Recovery". Several conditions can prevent a requested interchange. If the interchange fails and the message displayed is not self-explanatory, use **status spe** to determine what caused the failure. "Executing a Planned SPE Interchange" in Chapter 5, "Responding to Alarms and Errors" and STBY-SPE in Chapter 9, "Maintenance Object Repair Procedures" contain useful information for troubleshooting interchange failures, The following display shows a typical result when **reset sys int** is entered while a save operation is currently running.

```
reset system interchange                                    SPE A



              Unable to interchange due to MSS activity.
```

Reset Tape

reset tape [C]

This command resets the tape circuit pack, queries the device for ID, size and other information, initiates self testing of the device, and rewinds the tape. If

successful, all alarms active for the tape device are cleared and the device is put back in service.

This command will abort if any other MSS operation has already begun.

Failure of the reset command will place the tape in the uninstalled state, preventing all maintenance testing including demand testing of the failed tape as well as all system access to the failed tape except for this reset command.

When the host-adapter is busied out, only the busyout and test commands are permitted on the tape in that carrier. Reset, release, scheduled and periodic testing and other system software access are blocked. The host-adapter must be released before the tape can be released.

When the host-adapter is taken out-of-service due to test failures, or fails a reset and becomes uninstalled, the tape on the same carrier is also placed in the uninstalled state. All access to that tape by system software, including maintenance tests, resets and other commands are blocked from execution.

Parameters

C The cabinet is always 1 and need not be entered. Carrier a or b must be specified only for systems with duplicated SPE.

Examples

Simplex SPE:	**reset tape**
Duplicated SPE:	**reset tape a**

For more information see "Common Output Fields" at the beginning of this chapter.

Restore Announcements

restore announcements [disk | tape]

This command copies stored announcement data from the specified MSS device to the announcement board. On a duplicated system, data is always copied from the device on the active SPE.

NOTE:
The restore command can take up to 40 minutes to complete. Avoid pressing the ENTER key on the keyboard during this time, since doing so will cause the result messages to be lost.

The command is not executed if any of the following conditions is present:

- An announcement data module and a system port data module have not been administered.
- The announcement data module port is out of service or already in use (for example, performing an announcement playback).
- An integrated announcements session is in progress or the circuit pack is currently being uploaded or downloaded. Announcements cannot be save or restored after the restore announcements command has started. Tape is specified and a tape cartridge is not in the tape drive.
- A system port is not available.
- The MSS is in use by either another user or by maintenance.
- An announcement file does not exist on the specified device, or is corrupted.

In case of a failure of the restore command, you must make sure the announcement file is completely copied to the announcement circuit pack. The system will continually attempt to download the circuit pack at 10 minute intervals until either a download is successful, announcements are recorded, or a download is initiated from the terminal. In case of a hardware or firmware error, an error will be logged, pointing to the source of trouble. Maintenance software will invoke tests to diagnose and attempt to correct the problem. If maintenance software fails to correct the problem, an alarm is raised.

If a system crash or spontaneous SPE interchange takes place, the restore operation will fail, leaving the announcement circuit pack without a valid announcement file. To remedy this, repeat the restore command on the newly active SPE.

NOTE:
Until announcements are completely copied to the announcement circuit pack, calls will not be connected to any announcements on the announcement circuit pack.

When the announcement circuit pack is inserted or reset, an automatic download of the announcement file is performed.

Parameters

disk	This specifies copying the announcement data stored on the disk device. Disk is the default device.
tape	This specifies copying the announcement data stored on the tape device.

Output

Processor	The SPE from whose MSS device the announcement data was copied.
Command Completion Status	This field indicates the results of the command execution an gives a self-explanatory reason for any failures.
Error Code	A number indicating whether the announcement file was successfully restored to the announcement board: 0 = The restore was successful. 1 = The restore failed.

The following display shows a typical result when **restore announcements** is entered.

```
restore announcements                      Page   1 of   1   SPE A

                       RESTORE ANNOUNCEMENTS

 Processor  Command Completion Status                Error Code

 SPE-A      Success                                      0
```

Restore Disk

restore disk **[active | standby] [spe-a | spe-b] [both | either] [incremental | full]**

This command copies all information from the tape device in the specified SPE to the disk device on the same carrier. Defaults are a full restore and, if the SPE is duplicated, both SPEs.

NOTE:
The restore command can take up to 1 hour to complete. Avoid pressing the ENTER key on the keyboard during this time, since doing so will cause the result messages to be lost.

Parameters

spe-a	This specifies a restore from the A carrier tape device to the A carrier disk device.
spe-b	This specifies a restore from the B carrier tape device to the B carrier disk device.
active	This specifies a restore on the active SPE.
standby	This specifies a restore on the standby SPE.
both	This specifies a restore on both SPEs. If the MSS on either SPE is inaccessible, the restore will abort on both SPEs.
either	This specifies a restore on both SPEs. If the standby SPE is inaccessible, the active SPE only will be restored.
incremental	This specifies that all data on tape marked "good" that has a date newer than the date on the disk be copied to the disk from the tape.
full	This specifies that all data be copied to the disk regardless of the dates and the status of the data (e.g., "good" or "bad").

Examples

restore disk
restore disk active incremental

Output

The outcomes are displayed for each SPE.

Processor	This identifies the processor carrier that was backed up (SPE-A or SPE-B).
Command Completion Status	This field displays one of various self-explanatory messages indicating the success or failure of the command.

The following display shows a typical result when **restore disk** is entered.

```
restore disk

                    RESTORE DISK

Processor     Command Completion Status

SPE-A         Success
SPE-B         Success


Command Successfully Completed
```

Resume Hardware-Group

resume hardware-group

In the course of execution of a **test hardware-group** command, it may be desirable to halt the test temporarily or permanently. This is accomplished by either the **cancel hardware-group** command for a background test, or by pressing Cancel for a foreground test. **Resume hardware-group** enables you to restart the hardware group test at the point where it was canceled. This capability is not available if another hardware group test has been started. The status of a hardware group test can be obtained with **status hardware-group**.

When **test hardware-group all-ports** is canceled, the internally generated port translations for previously untranslated ports are removed. If **resume hardware-group** is then entered, only customer-administered ports will then be tested. **resume** does *not* reinstate the port translations that were removed by cancellation of the test.

Output

When a test that was executing in the background is resumed, a success message is displayed. When a test that was executing in the foreground is resumed, test results are displayed.

Save Announcements

save announcements **[active | standby | spe-a | spe-b | both | either] [disk | tape]**

CAUTION:
*Do not execute **save announcements** if there is an unresolved problem with the HOST-ADAPTR maintenance object. Save translations should not*

be done to a tape or disk device with unresolved problems. Doing so may destroy a good copy of the files.

CAUTION:
The option to save announcements to only one SPE in a duplicated system should be used with care since it causes two inconsistent versions to exist in storage.

CAUTION:
The save command can take up to 40 minutes to complete. Avoid pressing ENTER *during this time since doing so will cause the result messages to be lost.*

The save announcements command copies announcement data from the TN750B Integrated Announcement circuit pack to the Mass Storage System (MSS). Default devices are the disk in a disk/tape system, and the devices in both SPEs in a duplicated system. Other options are available as described below.

Save announcements writes two identical copies of the announcement data to each specified device. Each copy bears the same time-stamp, (the time at which the first copy was written). Each copy is also marked with the state of the copy ("good" or "bad").

Execution of this command requires the presence of a TN750B circuit pack and an administered announcement data module and associated system port.

The command is disallowed or aborts if:

- An announcement data module and system port data module are not administered.
- The announcement data module port is out of service or already in use.
- No announcements are on the board.
- An integrated announcements session is in progress.
- The board is currently being uploaded or downloaded.
- The tape drive is specified and no tape is in the tape drive or the tape is write-protected.
- No system access port is available.
- The MSS is in use by another user or by maintenance.
- The specified device or SPE is not in service.
- The standby SPE is specified and shadowing is not enabled.

A user cannot record announcements while a save announcements command is in progress. However, 15 channels are still available for announcement playback (one is reserved for uploading and downloading).

When MSS devices on both SPEs in a duplicated system are specified, **save announcements** will save data from the announcement board to the active and standby devices in parallel. The status of each save operation is reported separately. If one save operation fails, the save to the other device continues. Thus, the data is not lost. In this case, announcement date is inconsistent between the two devices. In case of a failure due to hardware faults or spontaneous SPE interchange, the user must make the announcement files on the two MSS devices consistent.

If a hardware failure occurs during a save announcements operation, software will log a hardware error. Maintenance software will invoke tests to diagnose and attempt to correct the problem. If corrective action fails, an alarm is raised against the ANNOUNCE maintenance object. Follow procedures recommended under ANNOUNCE in Chapter 9, "Maintenance Object Repair Procedures".

If a good copy of the announcement file is not available on the MSS, the **restore announcements** command can not be executed until after a successful **save announcements** is completed. The announcements on the board are still accessible and usable.

Parameters

active	This option specifies writing to the specified device in the currently active SPE.
standby	This option specifies writing to the specified device in the standby SPE.
spe-a	This option specifies writing to the specified device in the SPE on the A carrier.
spe-b	This option specifies writing to the specified device in the SPE on the B carrier.
both	This option specifies writing to the specified device in each SPE concurrently. A failure in accessing either device causes the entire operation to fail and neither device is written to.
either	This option specifies writing to the specified device in both SPEs concurrently. If there is a failure in accessing one of the devices, the announcement data will still be written to the other one.
disk	This option specifies writing to the disk drive. Disk is the default device.
tape	This option specifies writing to the tape drive.

Examples

save announcements
save announcements active disk
save announcements standby tape
save announcements spe-a disk

Output

Processor	The SPE(s) to which announcement data was written (SPE-A or SPE-B).
Command Completion Status	The result of command execution, with a self-explanatory message explaining any failure or abort.
Error Code	Each device holds two copies of the announcements file. This field indicates whether both copies on the device were successfully stored: 2 = Both copies of the file were saved. 1 = One copy was saved and one failed. 0 = Neither copy was saved.

The following display shows a typical result when **save announcements** is entered on a system with simplex SPE.

```
save announcements                              Page   1 of   1   SPE A

                        SAVE ANNOUNCEMENTS

 Processor  Command Completion Status             Error Code

 SPE-A      Success                                   2
```

Save Translation

save translation **[active | standby | spe-a | spe-b | both | either] [disk | tape]**

NOTE:
The save command can take up to 15 minutes to complete. Avoid pressing the ENTER key on the keyboard during this time, since doing so will cause the result messages to be lost.

All translation data is kept in volatile system memory during normal operation. In the event of a power outage or certain system failures, data in memory is lost. The save translation command allows the user to store on disk or tape the translation data currently in memory. This operation can be executed as part of scheduled background maintenance or on demand. The defaults are to save to disk and, on a system with duplicated SPEs, to both SPEs.

CAUTION:
Save translation should not be executed if there is an unresolved problem with the HOST-ADAPTR maintenance object. Save translations should not be done to a TAPE or DISK device with unresolved problems. Doing so may destroy a good copy of the files.

CAUTION:
On systems with duplicated SPEs, the capability to save translation to only one SPE should be used with extreme caution since it results in the two SPEs having inconsistent translation data in storage.

The save translation cannot be executed if translation data is being changed by an administration command.

Parameters

spe-a	This specifies saving translation data to the MSS device on the SPE in carrier A only.
spe-b	This specifies saving translation data to the MSS device on the SPE in carrier B only.
active	This specifies saving translation data on the active SPE only.
standby	This specifies saving translation data on the standby SPE only.
both	This specifies saving translation data on both SPEs concurrently (the default). The command will fail if the specified device on either SPE is inaccessible, and neither device will be saved to.
either	This specifies saving translation data on both SPEs. If the standby is inaccessible, the save will still be done on the active SPE.
disk	This specifies saving translation data to the disk drive. Disk is the default device.
tape	This specifies saving translation data to the tape drive.

Examples

save translation disk
save translation either tape

Output

Results are displayed for each SPE.

Processor	This identifies the SPE to which translation data was saved (SPE-A or SPE-B).
Command	One of the following results is displayed:

Completion Status	`Success`
	`Disk device is out of service`
	`Tape device is out of service`

The following display shows a typical result of entering **save translation** on a duplex system.

```
save translation

                          SAVE TRANSLATION

Processor    Command     Completion Status

SPE-A        Success
SPE-A        Success

Command Successfully Completed
```

Set PNC

set pnc lock | unlock

On Critical Reliability systems (duplicated PNC), **set pnc lock** locks the active port network connectivity in the active state. PNC interchanges will be prevented and the active port network connectivity will remain active regardless of its state of health. Duplicate call setup will still take place, though the standby is not available for service. This condition can also be initiated by the **reset pnc interchange override-and-lock** command. You can tell if the PNC is locked by looking at the `Software Locked?` field on the **status pnc** screen. (The `Interchange Disabled?` field refers to the antithrashing mechanism.)

Set pnc unlock releases the lock and enables subsequent interchanges to take place.

If the health of the active pnc has degraded to worse than that of the standby pnc, unlocking the active port network connectivity can cause an immediate PNC interchange This condition can be foreseen by use of **status pnc**.

System restarts remove a PNC lock.

CAUTION:
If the active PNC experiences problems while in the locked state, service disruptions may occur that would ordinarily be avoided by PNC interchange.

Parameters

lock	PNC interchanges will be prevented, and the active port network connectivity will be locked on-line.
unlock	Releases the PNC lock.

Set Signaling-Group

set signaling-group group#

The set signaling-group command sets the secondary D-Channel in the specified signaling group to be the primary D-Channel. The primary D-Channel becomes the secondary D-Channel. A signaling group is a collection of B-channels signaled for by a designated single D-channel or set of D-channels over an ISDN-PRI link.

Parameters

group# The signaling group identifier is an administered number assigned to each signaling group.

Set SNC

set snc UUCSS [override]

This command sets which switch node clock (SNC) circuit pack in a given switch node carrier is active.

NOTE:
This command is valid only on a High Reliability system with a Center Stage Switch (duplicated SPE, simplex PNC). In this configuration, SNCs are duplicated on each switch node carrier.

Parameters

override This qualifier will force execution of the set command regardless of the health of the standby SNC circuit pack.

Set Synchronization

set synchronization UUC [SS]

This command sets a specific DS1 trunk or tone-clock circuit pack as the reference source for system synchronization signals. It is permitted only after synchronization has been disabled with **disable synch**. Any administered DS1 trunk or *active* tone-clock may be entered with the set command. The DS1 or tone-clock will remain the synchronization reference until either the set command specifies another circuit pack, or **enable synchronization**is entered.

After an **enable synchronization**, the administered primary or secondary synchronization source will become the synchronization reference. If no primary or secondary source is administered, an active tone-clock will be used as the synchronization reference.

See SYNCH in Chapter 9 for details.

Parameters

UUCSS The location of the DS1 Interface or Tone-Clock circuit pack selected to provide the reference timing signals for system synchronization. The location of a DS1 trunk is entered as UUCSS. The location of a tone-clock, which must be active, is entered as UUC. UU represents the cabinet number, C the carrier letter, and SS the slot number.

Set TDM

set tdm port-network PN# bus a | b [override]

This command determines which of the paired TDM buses (A or B) on a port network will carry the control channel and dedicated tone time slots. Each port network has a 512 time-slot TDM bus configured as two separate 256 time-slot buses. This division allows for duplication of control channels and time slots dedicated for use by system tones. On power-up, the control channel is carried on the A bus, and the tone time slots are carried on the B bus. Execution of this command puts both the control channel and the tone time slots on the specified bus.

Under extremely heavy traffic load, tone time slots on the bus that is not currently carrying the tones may be used for call processing. Use of the override command under these conditions will cause calls to be dropped.

See TDM-BUS in Chapter 9 for details.

Parameters

PN# The Port Network number of the TDM bus to be set. **List cabinet** displays port network numbers for a given cabinet.

bus One of the paired TDM buses, a or b.

override This option forces the setting of a bus which is out of service or a bus whose dedicated tone time slots are in use by call processing.

CAUTION:
Use of this option disrupts service.

Examples

set tdm port-network 2 bus a

Set Time

set time

This command brings up a form showing the current day, date, month, year and time kept by the system clock. These entries can be edited to update the system time. The second field is set to zero whenever the time on the clock is altered. If no new entries are made, system time remains unchanged.

Input Form

An input form with the following fields is displayed. The current time, or default time will be displayed in the fields.

Day of the Week:	Valid entries are Monday through Sunday.
Day of the Month:	1-31 are valid entries. A check for leap year is also made.
Month:	January through December.
Year:	The year must be saved as translation data and passed to the kernel whenever kernel memory is corrupted (system reboot or cold I restart), or the data is changed.
Hour:	0-23 are valid entries.
Minute:	0-59 are valid entries.
Second:	This field is reset automatically and cannot be altered.

```
set time                                                    Page 1 of 1
                              DATE AND TIME
        DATE

            Day of the Week: _________      Month: _________
           Day of the Month: __              Year: ____

        TIME
                       Hour: __            Second:
                     Minute: __
```

Set Tone-Clock

set tone-clock UUC [override]

On port networks with duplicated Tone-Clocks, this command is used to select which of the two Tone-Clock circuit packs is to be active.

In EPNs, the A-carrier Tone Clock is the *preferred* Tone-Clock. It is always active unless a failure, maintenance testing, or use of this set command has caused an interchange to the B-carrier Tone-Clock. If you have used this command during a maintenance session, set the EPN Tone-Clock back to the A carrier when you are finished, assuming it is healthy. Tone-Clock interchanges executed by scheduled daily maintenance cause the standby to become active for 20 seconds and then interchange back to whichever Tone-Clock was originally active.

Cabinet number defaults to 1.

Parameters

override — This qualifier forces execution of the set command regardless of the health of the Tone-Clock circuit pack.

CAUTION:
Use of this option is destructive to an entire port network for EPNs and for the entire system for PPN Tone-Clocks.

Examples

set tone-clock 01c override
set tone-clock a

Set Vector

set vector reset-level# [spe-standby | spe-active | spe-maint | spe-smm]

The set vector command specifies the reset levels which will activate a core dump. When a designated reset occurs, a current copy of the system's memory is stored on the disk device, allowing the information to be examined later for troubleshooting purposes.

To force an immediate core dump, set the appropriate bit using this command and then execute **reset system** of the corresponding level, *but* be aware of possible disruption as a result of the reset.

CAUTION:
Note that level 1 (WARM) resets may result in a more destructive level 2 (COLD2) reset for certain settings of the vector.

CAUTION:
Service is disrupted whenever an active SPE is performing a core dump.

Execution

The following actions are taken in response to the vector settings listed below when a designated reset takes place. In all cases after a core dump has been performed, the vector will be cleared.

Simplex SPE

When a system restart occurs on a system with simplex (SPE) with the corresponding vector bit set, the core dump is written to the primary MSS device. Once the core dump is written, the vector is cleared and the restart is performed. When a WARM restart (reset system 1) is performed and the vector is set for WARM restarts, a COLDII is executed after the WARM restart in order to recover the packet interface circuit pack. Packet interface recovery is necessary due to delays of writing the core dump.

Duplicated SPE Options

spe-active	The active SPE will perform a core dump. When a WARM restart (reset system 1) is performed and the vector is set for WARM restarts, a COLDII is executed after the WARM restart in order to recover the packet interface circuit pack. This packet interface recovery is necessary due to the delays of writing the core dump
spe-standby	The standby SPE will perform a core dump after its memory has been refreshed. When a WARM restart (reset system 1) is performed and the vector is set for WARM restarts, a COLDII is executed after the WARM restart in order to recover the packet interface circuit pack. This packet interface recovery is necessary due to the delays of refreshing the standby processor.
spe-maint	The standby SPE will perform a core dump without refreshing its memory first. This option is the default on a duplicated system.
spe-smm	The standby SPE will perform a core dump. This allows a dump of the Standby Maintenance Monitor (SMM) when the standby SPE is experiencing problems. If an interchange occurs after the standby (spe-smm) SPE vector has been set, a core dump will not be performed on either the new active SPE or the new standby SPE regardless of the level of restart that occurs. However, if another interchange occurs making the new active SPE the standby SPE once again, a core dump on the standby SPE will occur if the standby restarts at the appropriate level.

Feature Interactions

In a simplex SPE system, service will be disrupted while a core dump is being written to the primary Mass Storage System device. In addition, service will continue to be disrupted until the software is restarted at an appropriate level. These "disruption" times will vary depending upon the particular switch configuration.

If a core dump file already exists, a subsequent core dump will overwrite it.

If the disk is not accessible, a core dump cannot be executed.

A core dump file can overwrite other files on tape. Caution must be exercised when generating a core dump on tape.

The vector will be cleared when a system restart of the proper level is performed regardless of whether the core is actually dumped.

If handshake is down in a duplicated system, while spe-active, spe-standby, or spe-maint is set, the active vector will be set, but the standby vector will retain its former value. This could lead to different vectors on the active and standby SPEs. **Set vector** should be reentered after handshake is back up. (Setting spe-smm while handshake is down returns an error message.) If handshake is up, the selected vector (active or standby) will be set and the other cleared.

If an interchange occurs after the spe-smm vector has been set, a subsequent restart will not trigger a core dump. However, if *another* interchange occurs, a core dump on the standby SPE will take place in response to a reset of the appropriate level on the standby.

Parameters

condition — A hexadecimal value representing the combination of reset levels (1-4) that are enabled to initiate a core dump, as illustrated in the following table.

Core Dump Vector Values

Vector Value	Reset Levels	Vector Value	Reset Levels
0	none	8	4
1	1	9	1, 4
2	2	a	2, 4
3	1, 2	b	1, 2, 4
4	3	c	3, 4
5	1, 3	d	1, 3, 4
6	2, 3	e	2, 3, 4
7	1, 2, 3	f	1, 2, 3, 4

Reset Level	Common Name
1	Warm Restart
2	Cold-2 Restart
3	Cold-1 Restart
4	Reboot

spe-standby — This is the default for duplicated systems. If a restart of a designated level occurs on the active SPE and the corresponding vector bit is set, a core dump will be taken on the standby SPE after the standby SPE has performed a refresh of memory.

spe-active — On duplicated systems, a restart on the active SPE will cause a core dump to be taken on the active SPE.

CAUTION:
*A core dump performed with the **spe-active** option causes a service disruption.*

spe-maint — On a duplicated system, if a restart of a designated level occurs on the active SPE, a core dump will be taken on the standby SPE without a refresh of its memory first.

spe-smm — On a duplicated system, if a restart of a designated level occurs on the standby SPE, a core dump will be taken on the standby SPE. This can be useful to debug Standby Maintenance Monitor (SMM) problems.

Status Access-Endpoint

status access-endpoint extension [print]

This command displays the operational of a non-signaling port on a DS1 interface or on an analog tie trunk circuit pack.

Output

Extension	The extension number of the specified port.
Port	The physical location (cabinet-carrier-slot-circuit) of the port.
Communication Type	The type of communication supported by the channel: 56k-data, 64k-data, or voice-band-data.
Service State	The operational status of the access-endpoint channel: in-service/idle, out-of-service, maintenance-busy or disconnected.
Connected Ports	The location of any facility/endpoint to which this access-endpoint is connected.

The following display shows a typical result when **status access-endpoint 2300** is entered.

```
status access-endpoint 2300                                SPE A

                  ACCESS END-POINT STATUS

                     Extension: 2300
                          Port: 02B0905
            Communication Type: 56k-data

                 Service State: disconnected

               Connected Ports:
```

Status Administered-Connection

status administered-connection adm-conn# [print]

This commands displays the operational status of an administered connection. To view administrative information for administered connections, use **list administered-connection** and **display administered-connection**.

Parameters

adm-conn#	The number (1-128) of the administered connection as assigned during administration.

Output

Connection Number:	The number assigned to the administered connection.
Enabled?	Whether the administered connection is enabled.
Originator:	The extension of the access or data endpoint that originates the connection.
Destination:	The destination address used to route the administered connection.
Connection State:	The current status of the administered connection as follows: `connected` = A connection between the originating and destination endpoints is currently active. `restored` = The connection has been restored. The session may or may not have been preserved. `failed` = The connection failed due to either an administrative error such as a wrong number or a service-blocking condition such as barring of outgoing calls. Recovering from such a failure requires manual intervention. No further attempt is made by the system to re-establish the administered connection until the **change administered-connection** command is executed. If the failure was caused by a transient condition, you may be able to re-establish the connection by first disabling and then re-enabling the connection via the "Enable?" field on the **change administered connection** form. (The **enable admin** and **disable admin** *commands* affect only maintenance processes).

Connection State: *(cont'd.)*	The cause of the failure is reported as an ISDN cause value that is recorded in the error log. Refer to the Hardware Error Log Table for ADM-CONN in Chapter 9 to identify failure causes. `waiting to retry` = The system is waiting between attempts to restore the connection. The amount of time between attempts to restore is administered on the administered connections form. Check the contents of the Failure Cause field for information about why the administered connection failed. attempting to connect/attempting to restore = These are transitional states during which an attempt is made to connect or restore the administered connection. If an administered connection remains in this state for longer than 1 minute, disable and then re-enable the connection. If the problem still persists, or if the administered connection has retried a number of times with "administered connection origination attempt timed out" reported in the Failure Cause field, then make sure that the originating data module is connected and the destination access endpoint is not out-of-service. `not scheduled` = The administered connection is enabled but is not scheduled to be active at the current time.
Failure Cause:	This field displays a self-explanatory message indicating the reason for a current state of ''attempting to connect,'' ''attempting to restore,'' or ''failed.'' If the administered connection should be active but is not connected, then this field shows the most recent reason for failure. See also the above description of "Connection State: failed".
Number of Retries:	The number of consecutive failed attempts to establish the connection.
Auto Restorable?	When an administered connection fails, the system can automatically attempt to restore the connection. This field indicates whether this capability is activated on the administered connections administration form.

The following display shows a typical result when **status administered-conn 3** is entered. In this example, destination is another switch, and the destination number consists of a trunk access code (512) and extension (26001).

```
status administered-connection 3                    page 1 of 1

                ADMINISTERED-CONNECTION STATUS

                Connection Number: 3
                          Enabled? y
                       Originator: 71001
                      Destination: 51226001

                 Connection State: connected
                    Failure Cause:
                Number of Retries:
                  Auto Restorable? y
```

Status Attendant

status attendant console# [print]

The status attendant command displays the operational state of the specified attendant console. This information can help in trouble diagnosis and in locating facilities to which the attendant console is connected.

Parameters

console# An identifying number (1-28) assigned to each attendant.

Output

Console Number	An identifying number (1-28) assigned to each attendant.
Port	The location of the associated port.
Service State	In-service/idle, in-service/active, out of service, or disconnected.
Usage State	Idle or active.
Maintenance Busy State	Whether the port is undergoing maintenance testing.
Connected Ports	Locations of ports to which the attendant is connected.

The following display shows a typical result when **status attendant 1** is entered:

```
status attendant 1

                          ATTENDANT STATUS

 Console Number: 1             Service State: in-service/night service
           Port: 01C1106      Maintenance Busy? no

Connected Ports:


Command successfully completed
```

Status BRI-Port

status bri-port UUCSSpp [print]

The status bri-port command displays the service state, maintenance state and layer 1 state of an ISDN-BRI port. Also displayed on this form is information on the point-to-point signaling links carried over the port. For more information, see BRI-PORT in Chapter 9.

Output

An extra section describing how to interpret the results of this command follows the screen display.

Port	The location of the ISDN-BRI port.
Service State	Whether the ISDN-BRI port is ‘‘in-service’’ or ‘‘out-of-service.’’
Maintenance Busy?	Whether maintenance testing is currently being performed on the port.
Layer 1 State	The operational state of the physical connection (Layer 1) of the ISDN link carried over the port: `activated` = Layer 1 frames are being passed between the port and BRI endpoints. `pend-activation` = The port is in service, the layer 1 interface device is turned on and layer 1 frames are being sent from the port, but the BRI endpoints are not responding. `deactivated` = The layer 1 interface device on the BRI has been turned off due to the port being out of service.
TEI Value	The Terminal Endpoint Identifier (TEI) is a layer 2 addressing parameter used by the switch to exchange information with BRI endpoints over the point-to-point signaling link. The TEI is a number from 1 to 127.

Layer2 State	The operational state of the point-to-point signaling link (Layer 2): `assigned` = The link is currently in the AWAIT_EST (Await Establish) state at layer 2. If the BRI endpoint supports TEI allocation procedures, those procedures have been successfully executed and a TEI has been assigned to the endpoint by the switch. `established` = The link is in the MF_EST_NORM (Multi-Frame Established Normal) state at layer 2. The switch has successfully started the link and is now capable of exchanging layer 3 frames with the endpoint. If the endpoint does not support SPID initialization procedures, the voice extension of the endpoint associated with the link is also displayed. This is the normal state for a link in a point-to-point wiring configuration. `L3-established` = The link is in the MF_EST_NORM state at layer 2 and SPID initialization procedures have been successfully completed. The voice extension of the endpoint associated with the link is also displayed. This is the normal state for a link in a multi-point wiring configuration. `hyperactive` = Traffic on this link has exceeded the threshold and the link has been suspended.
Endpt Extension	The extension of the voice/data endpoint associated with the link. This field is blank if the link is not in the `established` or `L3-established` state.
Endpt SPID	The SPID (Service Profile Identifier) administered for the voice/data endpoint. This field is blank if the link is not in the `established` or `L3-established` state.
Service SPID?	If the link is associated with the Service SPID this field displays `yes` and the Endpoint Extension field is blank. Otherwise this field is blank. Service SPID is a feature used by service technicians to check building wiring between the switch and the BRI endpoint.

The following display shows a typical result when **status bri-port** is entered.

```
status bri-port 1c1701                          Page 1 of   1   SPE A
                              STATUS BRI-PORT

             Port: 01C1701
    Service State: in-service
Maintenance Busy?: no
    Layer 1 State: activated

    TEI Value  Layer2 State   Endpt Extension  Endpt SPID  Service SPID?

Link1   64     13-established      1010           1010

Link2

Link3
```

Interpreting Results of BRI-Port Status Reports

The following tables will help to interpret results of the **status bri-port** command. Find the combination of output field values contained in your report and follow the recommendations for the type of endpoint connected to the port

Table 8-6. Interpreting BRI-Port Status Reports

Error Type	Aux Data	Associated Test	Alarm Level	On/Off Board	Test to Clear Value
ASAI, BRI	0-126	Assigned	blank	blank	This is a transitory state for BRI endpoints and ASAI adjuncts. The switch is attempting to establish the link. 1. Check the endpoint and wiring by following the SPID Facility Test Procedure described in the BRI-SET section of Chapter 9.

Continued on next page

Table 8-6. Interpreting BRI-Port Status Reports — *Continued*

Error Type	Aux Data	Associated Test	Alarm Level	On/Off Board	Test to Clear Value
ASAI, BRI *(cont'd.)*	0-126	Assigned	blank	blank	2. Repeat **status bri-port** to determine that the Layer 2 state of the signaling link is either **L3-Established** (for ASAI adjuncts and BRI endpoints supporting MIM initialization) or `Established` (for fixed TEI BRI endpoints and automatic TEI BRI endpoints not supporting MIM initialization). If it is not, follow normal escalation procedures. (A MIM or management information message is a level-3 message that conveys management and maintenance information between a communications system and a BRI terminal.)

Continued on next page

Table 8-6. Interpreting BRI-Port Status Reports — *Continued*

Error Type	Aux Data	Associated Test	Alarm Level	On/Off Board	Test to Clear Value
ASAI	0-63	Established	blank	blank	This is a transitory state for ASAI adjuncts. ASAI signaling is connected at Layer 2 but the Layer 3 Restart procedure has not been completed between switch and adjunct. 1. Check the adjunct by following the recommended repair procedures of the manufacturer. 2. Repeat **status bri-port** and determine whether the L2 state of the signaling link is L3-Established. If it is not, follow normal escalation procedures.
BRI	0-126	Established	ext#	blank	This is the normal state for non-MIM initializing, fixed, and automatic TEI BRI endpoints.

Continued on next page

Table 8-6. Interpreting BRI-Port Status Reports — *Continued*

Error Type	Aux Data	Associated Test	Alarm Level	On/Off Board	Test to Clear Value
BRI, ASAI	64-126	Established	blank	blank	This is a transitory state for automatic TEI BRI endpoints that support MIM initialization. 1. Verify that SPID administration on the switch and the endpoint are consistent. Repeat **status bri-port** to determine whether the Layer 2 state of the signaling link is `L3-Established`. 2. Try replacing the endpoint. Repeat **status bri-port** to determine whether the Layer 2 state of the signaling link is `L3-Established`. If it is not, follow normal escalation procedures.
BRI	64-126	L3-Established	ext#	blank	This is the normal state for automatic TEI BRI endpoints that support MIM initialization.
BRI, ASAI	64-126	L3-Established	blank	yes	A demand SPID Facility Test is in progress on the port, and the link is not currently associated with a BRI endpoint. See SPID Facility Test Procedures described in the BRI-SET section of Chapter 9.

Continued on next page

Table 8-6. Interpreting BRI-Port Status Reports — *Continued*

Error Type	Aux Data	Associated Test	Alarm Level	On/Off Board	Test to Clear Value
BRI	64-126	L3-Established	ext#	yes	A demand SPID Facility Test is in progress on the port, and the link is associated with an endpoint on the port. See SPID Facility Test Procedures described in the BRI-SET section of Chapter 9.
BRI	0-126	L3-Established	blank	blank	An invalid SPID is assigned to link. 1. Change the SPID value in the BRI endpoint to match the SPID administered to the BRI endpoint on the port. Repeat **status bri-port** to determine whether the Layer 2 state of the signaling link is `L3-Established`. If it is not, follow normal escalation procedures.

Continued on next page

Table 8-6. Interpreting BRI-Port Status Reports — *Continued*

Error Type	Aux Data	Associated Test	Alarm Level	On/Off Board	Test to Clear Value
BRI	0-126	L3-Assigned	ext#	blank	This is a transitory state for BRI endpoints that support MIM initialization. 1. Wait 5 seconds and repeat the command. If the state has not changed, continue with Step 2. 2. Make sure SPID administration on the switch and endpoint are consistent. Repeat **status bri-port** to determine whether the Layer 2 state of the signaling link is `L3-Established`. If it is not, go to Step 3. 3. Try replacing the endpoint. Repeat **status bri-port** to determine whether the Layer 2 state of the signaling link is `L3-Established`. If it is not, follow normal escalation procedures.

Continued on next page

Table 8-6. Interpreting BRI-Port Status Reports — *Continued*

Error Type	Aux Data	Associated Test	Alarm Level	On/Off Board	Test to Clear Value
BRI	0-126	L3-Assigned	ext#	yes	This is a transitory state for BRI endpoints that support MIM initialization when a SPID Facility Test has been used to initialize the station. 1. Wait 5 seconds and repeat the command. If the state has not changed continue with Step 2. 2. Make sure SPID administration on the switch and endpoints are consistent. Repeat **status bri-port** to determine whether the Layer 2 state of the signaling link is `L3-Established`. If it is not, go to Step 3. 3. Try replacing the endpoint. Repeat **status bri-port** to determine whether the Layer 2 state of the signaling link is `L3-Established`. If it is not, follow normal escalation procedures.

Continued on next page

Table 8-6. Interpreting BRI-Port Status Reports — *Continued*

Error Type	Aux Data	Associated Test	Alarm Level	On/Off Board	Test to Clear Value
ASAI BRI	0-126	Hyperactive	ignore	ignore	Link has sent too many messages per unit time. Signaling has been suspended. After 60 seconds, the system attempts to put the link into service. If a link remains in this state while there is no activity at the BRI endpoint, take the following steps: 1. Make sure SPID administration on the switch and endpoints are consistent. Repeat **status bri-port** to determine whether the Layer 2 state of the signaling link is `L3-Established`. If it is not, go to Step 2. 2. Try replacing the endpoint. Repeat **status bri-port** to determine whether the Layer 2 state of the signaling link is `L3-Established`. If it is not, follow normal escalation procedures.
ASAI	0-126	L3-Restarting	ext#		The switch has sent a Restart message to the adjunct but has not yet received a Restart Acknowledgment message from the adjunct.

Continued on next page

Table 8-6. Interpreting BRI-Port Status Reports — *Continued*

Error Type	Aux Data	Associated Test	Alarm Level	On/Off Board	Test to Clear Value
ASAI	0-126	L3-Restarted	ext#		After receiving a Restart Acknowledgment message, the switch has sent a Heartbeat message to the adjunct and is waiting for a response.
ASAI	0-126	L3-Established	ext#		This is the normal state for ASAI adjunct.

Status Cabinet

status cabinet UU [print]

This command displays the operational status and attributes of the specified cabinet. The output screen displays configuration information for each carrier, connectivity and alarm information for each port network or switch node, and the emergency transfer status of the cabinet.

The cabinet number defaults to 1.

Output

Carrier Location	The cabinet number and carrier letter of each carrier in the cabinet.
PN/SN Number	The Port Network number (1-22) or Switch Node number (1 or 2) of the indicated carrier.
Carrier Type	The type of the indicated carrier: processor, port, expansion-control, switch-node, dup-sw-node or not-used.
Cabinet Type	One of the following types: MCC Multicarrier cabinet SCC Single carrier cabinet S75XE System 75 (pre-R1V4) single carrier XE cabinet blank The cabinet type could not be determined.
PN/SN	Each Port Network and Switch Node located in the cabinet is identified by its PN number or its SN number and PNC designation (A or B).
Connectivity Status	**For PNs** connectivity status refers to the availability of the Expansion Archangel Link (EAL) and Indirect Neighbor Link (INL) to the carrier for both active and standby PNCs (if duplicated). Possible values are: up EAL and INL are both available. down EAL and INL are both unavailable. near-end The EAL is available and the INL is unavailable. far-end The INL is available and the EAL is unavailable. blank In the standby column, this means PNC is not duplicated. **For SNs** connectivity status indicates circuit pack insertion on the Switch Node as follows: up At least one switch node interface circuit pack in the Switch Node is inserted. down There are no switch node interface circuit packs inserted on the Switch Node. blank In the active column, this indicates that the Switch Node carrier is currently the standby in a critical reliability system. In the standby column, this indicates that the Switch Node carrier is currently active (whether or not PNC is duplicated).

Emergency Transfer	The location of the circuit pack containing the emergency transfer select switch (EPN maintenance or SYSAM). In PPN cabinets with duplicated SPEs, there are two such circuit packs. In this case, if the standby Emergency Transfer Select switch is changed while handshake is down, switch setting displayed will be incorrect until handshake comes back up.
Select Switch	The current setting of the emergency transfer switch:
	on — Emergency transfer has been manually activated.
	off — Emergency transfer is being manually prevented.
	auto+ — The cabinet is controlling emergency transfer and it is currently activated.
	auto- — The cabinet is controlling emergency transfer it is not currently activated.
	unavail — The current setting of the emergency transfer switch is not available.
PN/SN	Each Port Network and Switch Node located in the cabinet is identified by its PN number or its SN number and PNC designation (A or B).
Mj, Mn, Wn	The number of major, minor and warning alarms currently logged against the Port Network or Switch Node.

The following display shows a typical result when **status cabinet 1** is entered.

```
status cabinet 1

CABINET CONFIGURATION STATUS            CABINET CONNECTIVITY STATUS

Carrier   PN/SN   Carrier      Cabinet  PN/SN     Connectivity Status
Location  Number  Type         Type                Active    Standby

01A       PN 1    processor    MCC      PN 1         up        up
01B       PN 1    processor             SN 1  B-PNC            up
01C       PN 1    port                  SN 1  A-PNC  up
01D       SN 1    dup-sw-node
01E       SN 1    switch-node


CABINET EMERGENCY TRANSFER             CABINET ALARM STATUS

Emergency    Select                    PN/SN       Mj  Mn  Wn
Transfer     Switch                    PN 1         0   2   1

  01A         off                      SN 1  B-PNC  0   0   0
  01B         off                      SN 1  A-PNC  0   0   0
```

Status CDR-Link

status cdr-link [print]

The status cdr-link command displays the status of the call detail recording (CDR) links. If a link is down, the report includes the number of times the switch has tried to re-establish the link.

The CDR link is the physical link that the SPE uses to send call detail records to an output device such as a Call Detail Recording Utility (CDRU). CDR links use System Ports which are described in the PDATA-PT section of Chapter 9. A system may have up to two CDR links, a primary and a secondary. See PRI-CDR in Chapter 9.

Output

The following information is displayed for both the Primary and Secondary CDR links, whether or not both are used.

Link State	The operational status of the link as follows:	
	up	The link is established and is capable of supporting the application. This is the normal operational state.
	down	The link is physically down.
	extension not administered	An extension number for the output device has not been assigned on the CDR system parameters form.
Number of Retries	The number of times the switch has tried to set up the link.	
Maintenance Busy	Whether the link is busied out for testing.	

The following is an example of the fields contained on the output form.

```
status cdr-link                                        SPE A

                          CDR LINK STATUS

                   Primary                  Secondary

      Links state: up                       extension not administered

 Maintenance Busy? no
```

Status Data-Module

status data-module extension [print]

This command displays internal software states of a specified data-module port. It is useful for diagnosis and locating facilities to which the data module is connected.

Output

Data Ext/Sta Ext for Stn DM	The data module's extension number. For DTDMs, the connected station extension is shown instead.
Port/Channel Number	The location of the port connected to the data module. For data channels, the channel number is shown instead.
Service State	The operational state of the data-module:
	in-service/idle — The data module is connected but not in use.
	in-service/active — The data module is connected and in use.
	out-of-service — The data module has been removed from service.

If the specified port is administered as a system port, the following fields will be displayed at the bottom of the screen. See PDATA-PT in Chapter 9 for more information.

CF Destination Ext	The call-forwarding destination, if any, of the port.
Maintenance Busy	Whether the port is busied out for testing.
Connected Ports	Locations of ports to which the data module is currently connected.
Associated PDATA Port	The location of a port on a TN553 Packet Data Line circuit pack to which this data-module port is connected.
Service State	The operational state of the associated PDATA port.
Maintenance Busy	Whether the PDATA port is busied out for testing.

The following display shows a typical result when **status data-module 301** is entered.

```
status data-module 301

                              DATA MODULE STATUS

Data Ext/Stn Ext for Stn DM: 301          Service State: out-of-service
        Port/Channel Number: 01C1103   Maintenance Busy? no
         CF Destination Ext:

            Connected Ports:
```

The following display shows a typical result when **status data-module 5451** is entered and extension 5451 is a system port.

```
status data-module 301

                              DATA MODULE STATUS

Data Ext/Stn Ext for Stn DM: 5451       Service State: in-service/active
        Port/Channel Number: 01D0601     Maintenance Busy? no
         CF Destination Ext:

            Connected Ports: 04B0402




            Associated PDATA Port: 01D0501
                    Service State: in-service/active
                 Maintenance Busy? no
```

Status Hardware-Group

status hardware-group [print]

Summary information on the active or last hardware group tests will be displayed. This display includes the number and percentage of maintenance objects tested, the percentage of tests passed/failed/aborted, the time elapsed since initiating the hardware group test, the specific hardware group test command (see test hardware-group command) initiated, and the state (active/canceled/complete) of the hardware-group test.

Output

Hardware Group Command State:	The state of a hardware-group command: active: testing is in progress; canceled: testing has been canceled; complete the command has completed and there is no testing going on.
Number of MOs Tested:	The number of MOs in the specified group (refer to test hardware-group command) that have had been tested by the current hardware-group command. This includes all MOs that were either actually tested or were aborted due to resource contention.
Total Number of MOs to be Tested:	The total number of MOs in the group that was specified in the "test hardware-group" command.
Percent Complete:	A ratio of the number of MOs completed and the total number of MOs to test in the command.
Elapsed Test Time:	The duration of the hardware-group test. If a test was canceled and then restarted this time excludes the cancel period. If the hardware-group command has finished it will indicate the length of time it took to complete the command. The time is displayed in the HH:MM:SS format where HH is hours, MM is minutes, and SS is seconds.
Repetition Number	The number of iterations that have been completed corresponding to the 'repeat' or the 'continuously' option.
Percentage of Tests Passed:	The percentage of tests that passed.
Percentage of Tests Failed:	The percentage of tests that failed.
Percentage of Tests Aborted:	The percentage of tests that were aborted.
Command:	The hardware-group action object and qualifiers that were entered.
Test sequence:	This will display either short or long.
Test repetition:	This will display either continuously or the keyword repeat along with the repeat value entered.
Output options:	This will display the selections that were chosen on the input form: auto-page, background, or failures.

Hardware options: This will display the selections that were chosen on the input form, (all-ports or SPE-interchange).

The following display shows a typical result when **status hardware-group** is entered.

```
status hardware-group                                    page 1 of 1
                           HARDWARE GROUP STATUS

                   Hardware Group Command State:   active
                           Number of MOs Tested:    11070
               Total Number of MOs to be Tested:    12300
                               Percent Complete:       90%
                 Elapsed Test Time (hr:min:sec):  4:15:30
                              Repetition Number:        1
                     Percentage of Tests Passed:       82%
                     Percentage of Tests Failed:       11%
                    Percentage of Tests Aborted:        7%

                          ENTERED HARDWARE GROUP Command

          Command: test hardware-group system
    Test sequence: short
  Test repetition: repeat 3
   Output Options: failures
 Hardware Options: SPE-interchange
```

Status Health

status health [print]

The status health command displays a summary of current conditions throughout the system that are critical to service. **Monitor health** displays the same screen and updates it automatically.

Parameters

print	Sends output to a printer connected to the terminal and to the screen

Output

Major	Number of major alarms logged up to 2000
Minor	Number of minor alarms logged up to 2000
Warning	Number of warning alarms logged up to 2000
Trunks	Number of busied-out trunks
Stations	Number of busied-out stations
Others	Number of busied-out maintenance objects, excluding trunks and stations
Static	Percentage of CPU time currently dedicated to high priority items such as the operating system, rounded to the nearest whole number
SM	Percentage of CPU time currently dedicated to system management or periodic and scheduled maintenance, rounded to the nearest whole number If a large amount of periodic or scheduled maintenance testing is being performed, this number can be high without affecting service.
CP	Percentage of CPU time currently dedicated to call processing, rounded to the nearest whole number Call processing has priority over system management and will draw occupancy from the SM or IDLE categories.
Idle	Percentage of CPU time currently idle and available for use, rounded to the nearest whole number
Active SPE	Always A for a simplex SPE, otherwise: A or B — The currently active SPE locked — The SPE is locked by the SPE-Select switches on the Duplication Interface circuit packs. auto — The switches are set to allow the system control of active SPE selection.

Active PNC	Always A for a simplex PNC, otherwise:	
	A-PNC or B-PNC	The currently active PNC
	locked	The PNC is locked via the **set pnc** command.
	auto	The system is controlling selection of the active PNC.
Duplicated?	Whether the SPE and PNC are duplicated	
SPE Power	Current source of power to the PPN	
	commercial	The SPE is currently powered by the normal external power source.
	backup	The SPE is currently powered by the backup batteries. This is usually due to a failure of the external power source.
Time Source	The current source of timing signals used for system synchronization	
	For systems with a Stratum 3 clock:	
	external	Normal operating condition
	internal	Another source besides the Stratum 3 clock, such as a Tone-Clock circuit pack, is providing the master timing signal.
	For systems with Stratum 4 timing:	
	primary	The primary administered timing source
	secondary	The secondary administered timing source
	local	Another source besides the administered ones, such as a Tone-Clock circuit pack, is providing the master timing signal.
# Logins	Number of current users	
Cab	Cabinet number	
	Cabinet numbers can be related to port network numbers with the **list cabinet** command.	

Emerg Trans

The current setting of the switches on the SYSAM and EPN Maintenance circuit packs that control Emergency Transfer

See EMG-XFER in Chapter 9. For a PPN cabinet with duplicated SPEs, settings for both SYSAM circuit packs are displayed; `auto` is then abbreviated to `a`, and `off` to `of`. If the Emergency Transfer switch setting on a standby SYSAM is changed while handshake is down, this field will display the prior value until handshake is restored.

`auto -`	Emergency Transfer is under system control and is not currently activated (normal operating state).
`auto +`	Emergency Transfer is under system control and is in effect.
`on`	Emergency Transfer has been manually activated. This setting should only be in effect during an emergency.
`off`	Emergency Transfer is manually prevented from occurring. This setting should only be in effect when a technician is on site.
`n.a.`	The setting of the switch in this EPN is not available to the switch. The Expansion Archangel Link may be down.

Mj, Mn, Wn — Number of Major, Minor or Warning alarms associated with the cabinet

An asterisk indicates that the number exceeds 99.

PNC — Current Port Network Connectivity (PNC) status for each of the port networks in the cabinet

When multiple port networks exist within a cabinet, Carriers A, B, and C are listed first and separated from Carriers D and E by a slash (e.g. up/up).

- `up` — Both the Expansion Archangel Link (EAL) and the Indirect Neighbor Link (INL, if applicable) are available.
- `dn` — Both EAL and INL (if applicable) are not available.
- `ne` — (Near End) The EAL is available but the INL is not available.
- `fe` — (Far End) The INL is available but the EAL is not available.
- `up/up` — When two port networks share a cabinet, the port network in carriers A, B, and C is listed first and separated from the one in carriers D and E by a slash.

Time of Day — Current system time

The following display shows a typical result when **status health** is entered on a system with 3 cabinets.

```
 status health
 SPE: A/Auto    B/functional         OCC:  ST:  9%   Cp: 25%  Sm: 10%  Idl:66%
 PNC: A-PNC/Auto B-PNC/functional   ALARM:Maj:  0   Min:  2   Wrn:  9
 Pwr: Comm   Sync:local   Logins:4   BUSYOUTS:Trk:  0   Stn:  0   Oth:  0

 Cab  EmTr  Mj  Mn  Wn  PNC  Cab  EmTr  Mj  Mn  PNC  Cab EmTr  Mj  Mn  Wn  PNC
 1    off   0|  7|  0   up
 2    off   0|  0|  4   up
 3    nia   0|  2|  0   up                                        -Press CANCEL to
quit -   9:33 THU APR 16 :1993
```

Feature Interactions

In a High or Critical Reliability System, if the standby SPE Emergency Transfer Select Switch is changed and the handshake is down, the displayed Emerg Trans field will be incorrect until the handshake comes up again.

Status ISDN-Testcall

status isdn-testcall group# / member# [print]

Examples

status isdn-testcall 78/1 print

This command displays the progress of an outgoing ISDN-PRI test call on the trunk specified. The tested ISDN-PRI B-channel port number, bit error rate, number of bits transmitted, block error rate, number of blocks transmitted, start time, duration specified, duration of test call and reason of termination are displayed on the status form.

If the bit error rate or block error rate is greater than zero, the ISDN-PRI trunk "may" be in a troubled state. Based on the statistical information displayed on the terminal, it can be decided to take the ISDN trunk out of service. This is subjective data because the ISDN trunk may be used for data or voice. If the trunk is used for data and the rates are high, the trunk should be taken out of service. If the trunk is used for voice, the trunk may not have to be taken out of service. High rates may also be due to some type of power hit on the line.

Output

Port	This field specifies the physical address of the ISDN-PRI B-channel.
Bit Error Rate	The measured bit error count according to the comparison of the sent and received bit pattern. The number is displayed in scientific notation.
Number of Bits	The number of bits generated. The number is displayed in scientific notation.
Block error Rate	The measured block error count according to the comparison of the sent and received bit pattern. The number is displayed in scientific notation.
Number of Blocks	The number of blocks generated. The number is displayed in scientific notation.
Start Time	The time the test call started (dd/hh:mm).
Duration Specified	The duration specified in minutes for how long the test call should run. Valid durations are 1-120 (minutes) or blank (to indicate the default amount of minutes was used to run the test).
Duration of Test	The duration specified in minutes for how long the test call has been running. A blank indicates that the default amount of time was used to run the test.
Reason of Termination	The reason of termination indicates why the test call has terminated. Valid reasons of termination are "finished," "canceled,""overflow," "no bits," "transmission," "internal fail," "data corrupt," and "in progress." A termination reason of "finished" means the test finished in the specified time. A termination reason of "canceled" means the test call has been canceled with the "clear isdn-testcall" command. A reason of "overflow" denotes that the bits transmitted have overflowed buffer allocation. A reason of "no bits" means that no bits have been received because the ISDN-PRI test call circuit connection is bad. A reason of "transmission" means there has been a data transmission interruption, probably caused from a power hit. A termination reason of "internal fail" specifies that there is an internal error on the Maintenance/Test circuit pack. A reason of "in progress" means the test is still running and a reason of "data corrupt" is used for any other error condition.

The following display shows a typical result when **status isdn-t 80/1** is entered.

```
status isdn-testcall 80/1                          Page 1 of   1   SPE A
                              ISDN TESTCALL STATUS

       Bit   Number Block Number                   Duration Reason
       Error Of     Error Of     Start    Duration  Of      Of
Port   Rate  Bits   Rate  Blocks Time     Specified Test    Termination

1B1401 0EE0  4EE7   0EE0  6EE2   25/12:36   120     100     in progress
```

Status Journal-Link

status journal-link wakeup-log | pms-log [print]

This command displays the operational status of a wakeup-log or a pms-log printer link. If the link is down, the number of times the switch has tried to re-establish the link will be shown.

A journal printer is used to document automatic wake-up events, emergency access to attendant events and, if the Property Management System is not functional, housekeeping events. When the system includes two printers, one is for the housekeeping events and the other is used for automatic wake-up events and emergency access events.

Parameters

wakeup-log	The printer that handles automatic wakeup events, emergency access events and scheduled reports.
pms-log	The printer that handles housekeeping events while the PMS is down.
print	This qualifier sends output to a printer connected to the terminal and to the screen.

Examples

status journal-link wakeup-log
status journal-link pms-log print

Output

Link State	The operational status of the link as follows:	
	up	The link is established and is capable of supporting the application. This is the normal operational state.
	down	The link is physically down.
	extension not administered	An extension number for the printer has not been assigned on the hospitality system parameters.
Maintenance Busy	Whether there is any maintenance testing being performed upon the link.	

The following display shows a typical result when **status journal-link wakeup-log** is entered.

```
status journal-link wakeup-log                          SPE A

                            JOURNAL LINK STATUS

          Link State: down
   Number of retries: 1
    Maintenance Busy? no
```

Status Link

status link link# [print]

The status link command displays the operational status associated with a specified X.25 link. If you know the physical Packet Gateway port number, but not the link number, use **status pgate-port** to access the same information.

Adjunct Applications supported over X.25 connections include:

- AUDIX
- Calling Party Billing Number (CPN/BN or ISDN Gateway)
- CMS
- DCS
- Gateway Channels for DCS over ISDN-PRI
- Message Server

For details regarding these adjuncts and their administration, see *DEFINITY Communications System Generic 3 V2 Implementation,* 555-230-653.

The following terms are used in the descriptions of the output fields:

Link	A synchronous connection between the switch and an adjunct or another switch. The link consists of three protocol levels described below. The entire link is identified by a link number (1-16) which is specified on the **change communications-interface links** form.
Level 1	The physical connection between a local port on a PGATE board and the corresponding hardware at the other end (for example, a PI board on a G3i, an SCP board on Audix, or a PGATE board on another G3r). There may be several Level 1 components between these two endpoints (for example, modems, DS1 facilities, cables, etc.).
Level 2	The logical protocol that allows data communication between these two endpoints. BX.25 specifies that this be the LAPB (Link Access Protocol on the B-channel) protocol. Frames are sent at Level 2. Establishment of the protocol requires one end to send a SABM (Set Asynchronous Balanced Mode) frame and the other to respond with a UA (User Acknowledgment) frame. Both sides send SABMs until they receive a UA, at which time Level 2 is up and the Link Status field indicates "restarting". Restarting should be a temporary condition, since the link is unusable until Level 3 comes up. Level 3 should come up quickly after the establishment of Level 2.

Level 3	The logical protocol that allows multiplexing of many channels onto one Level 2 link. BX.25 specifies the X.25 data phase protocol. Packets are sent at Level 3 and are included in Level 2 frames. This protocol is established after Level 2 when one end sends a Restart packet and the other end replies with a Restart Confirm packet. The Link Status field indicates "connected" when Level 3 is up.
Processor channel	One of the 128 channels that connect the SPE to ports communicating with adjuncts or other switches over the BX.25 links. A single link may utilize up to 64 processor channels. The link number (1-16), the Level 3 processor channel number (1-128), and the name of the associated adjunct (dcs, audix, and so on) using the channel are administered on the communication-interface processor-channel form which can be accessed with **display** and **change** commands.
Hop channel	Used in DCS, a hop channel allows a remote switch to communicate with another switch (or an adjunct) through an intermediary switch (called the tandem switch). The hop channel connects a channel on one link to a different channel on another link to form an extended connection that allows the joined endpoints to function as if they were directly connected. In this way each machine in the DCS network can have processor channel connections to every other machine without requiring a direct link with every other machine.

Parameters

link# The number (1-16) used to identify a specific link.

Output

Data Extension	The extension of the packet gateway port.
Port Location	The physical location of the packet gateway port (cabinet-carrier-slot-circuit).
Service State	One of the following service states is displayed: **in-service/idle**: The circuit pack has been inserted by system software and the port has initialized properly, but Level 3 protocol is not established. **in-service/active**: The circuit pack has been inserted by system software, the port has initialized properly, and Level 3 protocol is established. **out-of-service**: Either the port is busied out or the circuit pack is absent.
Maintenance Busy?	Whether or not the Packet Gateway port is busied out for maintenance testing.
Connected to	The port that connects to the link. The port can be specified by destination digits or by an extension number entered in the ''Connected To'' field on the **change communication-interface link** form.
AC	This field is displayed when the extension displayed in the ''Connected To'' field is part of an administered connection. The following information is given: ■ Administered connection number ■ Status of the administered connection: ''Connected'', ''Disconnected'', or ''Disabled'' ■ Extension type: ''Orig'' for an originating extension; ''Dest'' for a destination extension The status command searches for the first occurrence of the Connected Data Module as an originator or destination of an AC. If the same AC is administered twice (with different numbers), the lower numbered one is disabled and the higher numbered one is enabled. In such a case, the command will find the lower one and display it as not connected even though the link may be up on the higher one.

Link Number	The link number (1-16) specified on the command line.
Link Id	A descriptive string assigned by the user. This is ordinarily the name of the application or adjunct connected to the link.
Link Status	One of the following states is displayed: **connected**: A Level 3 connection with the other end is established. **disconnected**: A Level 2 connection with the other end is not established. **restarting**: A Level 2 connection with the other end is established and the Level 3 connection is being attempted.
Active Channels	The number of logical channels active on this link.
Service State	The service state of the PDM listed in the ‘‘Connected to’’ field: ‘‘in-service/active,’’ ‘‘in-service/idle,’’ or ‘‘out-of-service.’’

The following fields represent values of counters read from the Packet Gateway circuit pack. These counters are not initialized when the circuit pack is inserted. To get reliable values for these, use **clear link** and wait about 15 minutes.

CRC Check (receive)	The number of frames received with a bad Cyclic Redundancy Check. Excessive errors of this type indicate noise on the link, which is usually caused by a Level 1 problem. If this is the case, try testing and replacing the various Level 1 components in the connection or the circuit pack at the far end of the link. Look also at the error counters for the far-end circuit pack. If the near-end CRC Check or Invalid Frame counters are increasing, the far-end should report an increasing number of retransmitted frames. If this is the case, the problem probably lies in the connecting facilities.
Invalid Frame (receive)	The number of frame errors received from the far end of the link. Diagnostics for this counter are the same as those for "CRC Check (receive)" described above.
Information Frame (retransmit)	The number of Level two information frames that have been retransmitted due to errors or missing messages. A high value in this field usually means noise is being introduced on the link, causing the data within the information to be changed; therefore, when the cyclic redundancy check (CRC) is performed by the receiver it will not agree with the CRC sent with the message. Excessive errors of this type indicate noise, usually caused by a Level 1 problem. Try testing and replacing, if necessary, both the various Level 1 components in the connection and the circuit pack. Look also at the error counters on the far-end circuit pack. If the CRC check or Invalid Frame counters are increasing on the far-end, the near-end should report an increasing number of retransmitted frames. If this is the case, then the problem probably lies in the connecting facilities.

Level 2 link reset (receive)	This value indicates the number of times the Level 2 protocol has been reset by the far end. A non-zero value indicates one of the following: ■ Noise is being introduced on the link and a reset has been requested. See ‘‘Information Frame (retransmit).’’ ■ If this counter increases without the link coming up, and the near end’s transmitted resets are increasing also, there may be a one-way connection (incoming only). ■ If the near end’s resets transmitted count is not increasing, the near end may not be accepting the reset request. Busyout and release the link. ■ Translations are not correct. One side must act as a DTE and the other as a DCE. Try changing the administration of the near end to the opposite of its current definition on the X.25 data module form.
Level 2 link reset (transmit)	The number of times the Level 2 protocol has been reset by the near end. A non-zero value may indicate any of the following: ■ Noise is being introduced on the link, causing a reset. (See "Invalid Frame (receive)" above. ■ The link has been taken down by the near end, resulting in the far end continuously sending SABMs while waiting for the near end to reply ■ The far end has faulty translations, causing it to fail to respond to the I-frames received. ■ The connections to the far end are faulty.
Level 3 restart packet (receive)	The number of "Level 3 link reset" messages received by the switch. These packets are received when the connected application decides to reset and restart the communication channel. This counter is meaningful only if there are no Level 2 problems. If Level 2 is functioning correctly, non-zero values may indicate a malfunctioning adjunct, or slow packet transmission at the switch end causing the adjunct’s timers to expire.

Level 3 restart packet (transmit)	The number of "Level 3 link reset" messages transmitted by the switch. These are transmitted when the switch decides to reset and restart the communication channel. This counter is meaningful only if there are no Level 2 problems. If Level 2 is functioning correctly, non-zero values may indicate that the adjunct is not responding to the messages in time, causing the timers on the switch to expire.
PROCESSOR/ HOP CHANNEL STATUS	For each channel, the type of the channel (p for processor, h for hop), the channel number (1-128), and the channel's status is given as follows: + For hop channels, this indicates that connectivity is established through this switch. For processor channels, this indicates that the session level protocol (which uses Level 3) is established, and application messages can be transferred. Level 3 must be up for this to occur. *For the DCS gateway application*, a + does not mean that end-to-end communication is established. The local SPE does not interpret gateway data as it does data from other applications. Instead the data is retransmitted over a TSC (temporary signaling connection) carried on a PRI D-channel. Such a processor channel can be up regardless of the status of the corresponding TSC. Messages received by the gateway application for a TSC that is not established are silently dropped. - The SPE could not establish a connection to the specified channel on the PGATE circuit pack. This is always the case when link Level 3 is not up. If Level 3 is up, check for errors on PGATE-BD, PGATE-PT, or other related maintenance objects (SYSLINK, PKT-INT or PKT-BUS). SYSLINK procedures should indicate whether there are any other objects to check. Note that a hop channel is associated with two links; "-" is displayed unless Level 3 is up on both links.

PROCESSOR/ HOP CHANNEL STATUS (continued)

* On a processor channel, Level 3 is established but the session Level protocol is not. This will be the case immediately after Level 3 is established on the link. The channel should come up ("+") within 30 seconds. (This status is not valid for a hop channel).

If Level 3 is established on a link, and other channels on the link are up, down channels may indicate:

- Port translations (local and remote port numbers) do not match. (For each end, the local port specification must match the opposite end's remote port specification).
- Distant components of the channel's logical connectivity may be faulty. The down channel may hop to another channel at the far-end switch, or at another, more distant, switch. If the link to which the channel is hopped is down (at the far-end switch) the channel will not come up. All links on the path between the two ultimate endpoints must be up for the channel to come up. Therefore, this condition could come and go because of actions taking place on a distant machine.

If all sessions on the link are down, the following may be indicated:

- Either or both of the two problems mentioned above may be present for each processor channel on the link.
- If all of the processor channels terminate on the same machine, (they are not hopped elsewhere), there may be problems with the far-end machine's software. First busyout and release the link. If that fails, restart the far end's software.

The following display shows a typical result when **status link 1** is entered.

```
status link 1                                          Page   1 of   1
                        LINK/PGATE PORT STATUS

  Data Extension: 4011                     Link Number: 1
   Port Location: 01C0301                 Link Id: audixA
   Service State: in-service/active      Link Status: in-service
Maintenance Busy? n                     Active Channels: 0
   Connected To: 12C0308  PDMODULE     Service State: in-service/active
               AC: 1 Connected/Orig

                                 ERROR COUNTERS
             CRC Check (receive): 0
         Invalid Frame (receive): 0  Information Frame (retransmit): 0
    Level 2 link reset (receive): 0  Level 2 link reset (transmit): 0
Level 3 restart packet (receive): 0  Level 3 restart packet (transmit):0

                          PROCESSOR/HOP CHANNEL STATUS
  P001+ H005+ H001+
```

Status Logins

status logins [print]

This command will display information about all of the users that are currently logged into the system. This information will contain their login names, location of physical access, and their currently executing command.

The screen does not automatically update, and is a reflection of the system at the time the request was made. Users may have logged off, or on, or the command may have finished executing while the information is being displayed. These updates will not be reflected until the next execution of the command.

The command will take a snapshot of the commands that the users on the system are currently executing. Because of timing, the command could be terminated by the time this command finishes displaying the list (i.e. the active command may not be accurate).

Output

Login information is displayed with one line of data for each user.

Login Id — This field shows the login ID of the user that is currently logged into the system. The value of "LOGIN" means that the terminal is connected to that port and the login prompt is displayed, but no user is currently logged on. An asterisk in the login ID field identifies your login.

Type — This identifies the type of connection that is associated with the login session. Following are the list of possible values for this field:

Login Type	Description
SYS-PORT	A modem or data-module originated connection dialed into a port on a Data Line circuit pack and interfaced to the system by a Packet Gateway circuit pack.
MAINT	A direct cable connection to the G3-MT port of an EPN Maintenance circuit pack.

Login Type	Description
SYSAM-LCL	A direct cable connection to the SYSAM-LCL G3-MT port on the System Access and Maintenance circuit pack in the active processor carrier.
SYSAM-RMT	A dialed-in (or out) connection to the SYSAM-RMT port on the System Access and Maintenance circuit pack in the active processor carrier. Also known as the RAP.
SYS-PTR	A system printer that is currently active. The login will be the ID of the user who requested the print job.

Location — The physical location at which the user or printer is connected into the switch. For MAINT, SYSAM-LCL, and SYSAM-RMT this value will be the maintenance circuit pack location. For SYS-PORT this will be the address of the port to which the customer's terminal is connected. For SYS-PTR this is the address of the printer port.

Aux — This field gives additional location information. For MAINT, SYSAM-LCL, and SYSAM-RMT this field contains the port network number of the maintenance board. For SYS-PORT and SYS-PTR this indicates the Data Line port.

Active Command — This field displays the currently executing command, entered by the user logged into the system at the specified location. If the user has no command currently executing, then the field is empty.

The following display shows a typical result when **status logins** is entered.

```
status logins

                            USER LOGIN INFORMATION

 Login Type      Location Aux       Active Command

*craft SYSAM-LCL 01A      01        status logins
 cust  SYS-PORT  01c1101  01c1203   add station next
 inads SYSAM-RMT 01A      01
 LOGIN MAINT     02A      03
 craft SYS-PTR   02a0702  01c1204   list stations


Command successfully completed
```

Status Packet-Interface

status packet-interface [print]

The status packet-interface command displays the status of all packet-interface circuit packs in the system along with link information. The service state is displayed for both active and standby packet-interface circuit packs. Link status information including total, active and failed links are displayed for active packet-interface circuit packs only.

If there are no standby packet interface circuit packs, or if the standby is inaccessible (due to handshake failure, incomplete memory refresh, or locking of the SPEs) the standby packet-interface circuit packs will be in the uninstalled state.

When a packet-interface circuit pack is out-of-service or uninstalled, it is not used to establish and maintain links. When the circuit pack returns to in-service status, new links are again assigned to it.

For simplex SPE systems, information for only the A carrier packet-interface is displayed. For duplicated SPE systems, if the standby is inaccessible because of handshake failure or locking of carriers, the standby packet-interface circuit packs will be in the uninstalled state.

Output

Separate columns identify each packet interface circuit pack slot. Service state is displayed for both active and standby packet-interface circuit packs. Dashes in output fields for the standby SPE indicate that link information is not applicable to standby packet-interface circuit packs.

Location	The packet-interface cabinet, carrier and circuit pack position number.
Service State	One of the following states is displayed: "in-service", "out-of-service" or "uninstalled". The "standby" state is used in place of "in-service" for standby packet-interface circuit packs.
Total links	The total number of links.
Active links	The number of links that are in use.
Failed links	The number of links that failed to be established. These links are in a recovery state and not active. The failures can arise from problems in the packet-interface, EI or center stage hardware. The number of failed links is the number of total links minus the number of active links.

The following display shows a typical result when **status packet-interface** is entered.

```
status packet-interface

                    PACKET INTERFACE STATUS

     Location:       01A1              01A2              01A3
Service State:       in-service        uninstalled       uninstalled

  Total Links:       32                 -                 -
 Active Links:       32                 -                 -
 Failed Links:       0                  -                 -


     Location:       01B1              01B2              01B3
Service State:       standby           uninstalled       uninstalled

  Total Links:       -                 -                 -
 Active Links:       -                 -                 -
 Failed Links:       -                 -                 -
```

Status Periodic-Scheduled

status periodic-scheduled [print]

The status periodic-scheduled command displays summary information on currently active and recently completed background testing. Periodic tests are run every hour, and scheduled tests are run daily. Starting and stopping times, and other parameters for daily scheduled testing are administered on the **change system parameters maintenance** form.

Output

Percentage Complete	The ratio of the number of maintenance objects tested to the total number of maintenance objects tested during a cycle. For periodic tests, the ratio is for the current cycle, if active; or for the last completed cycle if not. For scheduled tests, the ratio is for the last completed cycle.
System Critical	System critical resources are those whose health affects the entire system such as the processor. These are always tested first.
Shared Resource	Shared resources are those that are used by many users, such as trunks. These are tested after system critical resources.
Single User	Single User resources are those whose health affects only one user, such as voice stations.
Pre-SCHEDULED MAINTENANCE	The system can be administered to perform interchanges of duplicated components and backup of data to disk before daily scheduled maintenance begins. This is pre-scheduled maintenance and is administered on the **change system-parameters maintenance** form.

The following display shows a typical result when **status periodic-scheduled** is entered.

```
status periodic-scheduled


               MO           Current   Current    Previous Cycle   Rate of
               Type         Cycle %   Cycle      Duration         Completed
                            Complete  Active?    (hr:min:sec      Cycles

PERIODIC     System Critical   80%       y        00:00:48         1.0/hr
MAINTENANCE  Shared Resource  100%       n        00:00:43         1.0/hr
             Single User      100%       n        00:00:48         1.0/hr

             Total                                 00:01:57

       Start Time of Current or Previous Cycle: 11/19/13:34:36

Pre-SCHEDULED MAINTENANCE   n        00:08:15

SCHEDULED    System Critical  100%       n        00:02:15          1.0/day
MAINTENANCE  Shared Resource  100%       n        00:03:16          1.0/day
             Single User      100%       n        00:20:05          1.0/day

             Total                                 00:25:36

       Start Time of Current or Previous Cycle: 11/18/22:00
```

Status PGATE-Port

status pgate UUCSSpp [print]

The status pgate-port command displays the operational status of a a specified Packet Gateway port. Such ports support the connection of X.25 adjunct applications to the system. If the technician knows the X.25 link number associated with the connection, but not the port number, then the "status link" command may be used to access exactly the same information.

Adjunct Applications supported over X.25 connections include:

- AUDIX
- Calling Party Billing Number (CPN/BN or ISDN Gateway)
- CMS
- DCS
- Gateway Channels for DCS over ISDN-PRI
- Message Server

See *DEFINITY Communications System Generic 3 V2 Implementation,* 555-230-653, for details. Status information provided by the command is restricted to the switch hardware and extends no further than the Packet Gateway circuit pack port.

The screen output for this command is the same as that for the **status link** command.

Status PMS-Link

status pms-link [print]

The status pms-link command displays the status of the property management system interface link. If the link is up, whether or not a data base swap is taking place between the switch and PMS, will be shown. If the link is down, the number of times the switch has tried to set up the link will be shown.

A property management system (PMS) is a stand alone computer system which can be integrated with the switch to enhance the service capability for a hotel/motel.

Output

Physical Link State	Up, down, or extension not administered will be displayed. The PMS link is considered administered only if an extension is given in the system hospitality form.
Protocol State	
Maintenance Busy	Whether there is any maintenance testing being performed upon the link.

The following display shows a typical result when **status pms-link** is entered.

```
status pms-link

                            PMS LINK STATUS

        Physical Link State: extension not administered
             Protocol State:


           Maintenance Busy?
```

Status PNC

status pnc [print]

The status pnc command displays a summary of conditions on the active and standby Port Network Connectivities. If the PNC is not duplicated, the screen displays blanks in the PNC-B and other duplication-related fields.

Output

Most fields on this screen display blanks when the PNC is not duplicated.

Duplicated?	Whether or not the system has a duplicated PNC (Critical Reliability option).
Software Locked?	On a system with duplicated PNC, whether the PNCs are locked by means of the **set pnc lock** or **reset pnc override-and-lock** commands. When this field displays "yes", spontaneous or demand PNC interchanges are not possible. To enable interchanges, use the **set pnc unlock** command.
Standby Busied?	On a system with duplicated PNC, whether or not the standby PNC is busied out with the **busy pnc** command. Interchanges are prevented when the standby is busied out.
Direct Connect?	Whether the system uses direct-connect connectivity or a center stage switch.
Standby Refreshed?	On a duplicated system, this field indicates whether the standby PNC has completed a global refresh of duplicated call setup after being released from a busyout, or after a system reset.

NOTE:
This field does not indicate if a partial unrefresh has taken place in response to a problem on the standby. Only a "functional" state of health on the standby (all zeros in the state of health vector) guarantees that the standby's call setup matches completely that of the active.

Interchange Disabled?	This field displays "yes" when the anti-thrashing mechanism is in effect, preventing PNC interchanges. This is the case for 5 minutes after a spontaneous PNC interchange, and for 30 seconds after a demand interchange. The **reset pnc interchange override-and-lock** command overrides antithrashing. This field does not indicate whether a PNC interchange is currently prevented by a software lock, by insufficient state of health of the standby, or by busyout of the standby.

In a duplicated system, each PNC has a separate entry for the following fields, representing conditions for only that particular PNC.

Mode	This field displays "active" or "standby", depending on whether or not that PNC controls active call processing.
State of Health	On a system with duplicated PNC, the state of health of each PNC. For the standby PNC, service effects mentioned below are those that would occur if that PNC were to become active via an interchange. Functional: the indicated PNC has no service disrupting alarms against it. The state of health vector is all zeros, and call setup on the standby PNC matches that of the active. Partially functional: the health of the PNC is less than perfect. The source and severity of the problem is indicated by the state of health vector (Inter-PN and Inter-SN Indexes). Whenever the standby's state of health is partially functional, duplicated call setup on the standby probably does not match that on the active. Not functional: Expansion Archangel Links to all EPNs are down on this PNC. No service is possible to any EPNs via this PNC.

Inter PN Index, Inter SN Index

The Inter-PN and Inter-SN Indexes form the state of health vector, which is used to track and compare the states of health of both PNCs. The fields making up the indexes are two digit numbers separated by periods (.), with each field representing a different class of faults. The fault class fields are arranged in order of decreasing importance from left to right. In other words, each field in the index supersedes the following fields in determining which PNC is healthiest. The Inter-PN Index contains five fields (XX.XX.XX.XX.XX), and the Inter-SN Index has two (XX.XX). The Inter-PN Index reports faults in connectivity between port networks and supersedes the Inter-SN Index, which reports faults in connectivity between switch nodes. (The Inter-SN Index is only meaningful for systems with a center stage switch having 2 switch nodes, each of which is duplicated).

The meaning of each fault class field is given in Table 8-7. A zero entry indicates that there are no such faults reported. Higher numbers indicate increasing number of faults. All zeros indicates perfect state of health. Unless the PNCs are locked, the active PNC's state of health should always be equal to or better than the standby's. (Otherwise, the system would perform a spontaneous interchange.)

After a PNC-related alarm is cleared, the system performs a partial refresh of the standby PNC. The corresponding fault class field is not updated to reflect the improved state of health until the refresh is done. The state of health indexes will not agree with the current alarm status during this period.

Inter SN Index: FC_SNIL. FC_SNIHW

Table 8-7. PNC State of Health—Fault Classes

Fault Class	Priority	Description	MOs
FC_EAL	1	Number of PNs with EALs down	EXP-PN
FC_INL	2	Number of PNs with LINL, RINL, or EI-SNI neighbor link faults	EXP-PN SN-CONF
FC_HW	3	Number of PNs affected by hardware faults in a link having an EI as an endpoint (Endpoints can be determined with **list fiber-link**.)	EXP-INTF SN-CONF FIBER-LK SNI-BD DS1C-BD
FC_PER	4	Number of PNs affected by SNI peer link faults for SNIs connected to EIs	SNI-PEER
FC_DS1	5	Number of PNs affected by DS1C facility faults	DS1FAC
FC_SNIL	6	Number of inter-switch-node fibers affected by peer or neighbor link faults	SNI-PEER
FC_SNIHW	7	Number of inter-switch-node fibers affected by hardware faults	SN-CONF SNI-BD FIBER-LK

Major Alarms, Minor Alarms, Warning Alarms	The number of major, minor, or warning alarms logged against DS1C-BD, SNI-BD, SNC-BD, EXP-INTF, FIBER-LK, DS1C-FAC, SNC-LINK, SN-CONF, SNC-REF, SYNCH, and SNI-PEER on the indicated PNC.
Switch Node Locations	The locations of all Switch Nodes comprising the indicated PNC.

The following display shows a typical result when **status pnc** is entered on a system with a single switch node CSS and duplicated PNC.

```
status pnc
                         PORT NETWORK CONNECTIVITY

                               Duplicated? yes
                           Software Locked? no
                            Standby Busied? no
                            Direct Connect? no
                          Standby Refreshed? yes
                       Interchange Disabled? no

            A-PNC                                   B-PNC

            Mode: active                            Mode: standby
 State of Health: functional            State of Health: functional
  Inter PN Index: 00.00.00.00.00         Inter PN Index: 00.00.00.00.00
  Inter SN Index: 00.00                  Inter SN Index: 00.00
    Major Alarms: 0                        Major Alarms: 0
    Minor Alarms: 0                        Minor Alarms: 0
  Warning Alarms: 0                      Warning Alarms: 0
    SN Locations: 01E                      SN Locations: 01D
```

Status Port-Network

status port-network [PN#] [print]

This command displays the operational status and attributes of the user specified Port Network and several of its key components, including expansion interface circuit pack(s), TDM busses, tone-clock circuit packs, and the packet bus.

Blank will be displayed for tdm bus, tone-clock and packet bus fields if the link to the EPN is down or if that information is otherwise unavailable.

Port network number defaults to 1.

If the Expansion Archangel Link to the specified Port Network is not available, tdm bus, tone clock, and packet bus fields will be blank.

Output

PN	The Port Network number associated with the Port Network for which status is being displayed.
Major Alarms	The number of major alarms logged against the Port Network that is being displayed.
Minor Alarms	The number of minor alarms logged against the Port Network that is being displayed.
Warning Alarms	The number of warning alarms logged against the Port Network that is being displayed.
Carrier Locs	The cabinet and carrier locations of each carrier in the Port Network.
PNC Status	Active (and Standby if PNC is duplicated) Port Network Connectivity (PNC) status for the specified port network is displayed. The PNC Status of a port network is determined by the availability of the Expansion Archangel Link (EAL) and Indirect Neighbor Link (INL) to the port network. A status of "up" denotes that the EAL and INL are both available. A status of "down" is displayed when the EAL and INL are both unavailable. When the EAL is available, but the INL is unavailable, a status of "near-end" is displayed. A status of "far-end" is displayed when the INL is available and the EAL is unavailable. When the EAL is unavailable (far-end), tone clock, tdm bus, and packet bus information will be blank.
FIBER-LINK	This field displays the fiber-link number associated with all fiber links having an Expansion Interface circuit pack endpoint residing in the specified Port Network. The fiber connectivity side will also be displayed (i.e. "A-PNC" or "B-PNC").
Endpoints	The physical position of each Expansion Interface board that is an endpoint for a fiber link in the specified Port Network is displayed as "UUcSS." "UU" represents the cabinet number, "c" represents the carrier, and "SS" represents the slot position. The simplex PNC configuration will display only one Expansion Interface pair, while the duplex PNC configuration will display two Expansion Interface pairs separated by a hyphen (-). If blanks are displayed it means the endpoints could not be retrieved by software.
Mode	The mode is the current role of the link. A mode of "active" means the link is providing normal circuit and control functions for the Port Network. A mode of "standby" means the link is part of a duplicated system and is ready to perform its functions but is not active. If blanks are displayed it means that PNC is not duplicated, or the mode could not be retrieved from software.

TDM Bus	The TDM bus identifier associated with the Port Network is displayed. The TDM bus ("a" or "b") specifies which half of the TDM bus is being displayed.
Service State	The operational state of the TDM bus. A TDM bus service state of "in" means the bus is in normal operation. A TDM bus service state of "out" means the bus has failed certain maintenance tests and has been taken out of service, or the maintenance object has been demand busied out.
Control Channel	This field shows whether the TDM bus has the control channel on it ("y"/"n"). Only one TDM bus of a TDM bus pair on each Port Network can have the control channel on it at a given time. If the system does not contain an EPN, blanks appear in this field.
Dedicated Tones	This field shows whether the TDM bus has the system tones on it ("y"/"n"). Only one TDM bus of a TDM bus pair can have system tones on it at a given time. If the system does not contain an EPN, blanks appear in this field.
TONE/CLOCK	The location of the tone-clock circuit packs in the specified Port Network. The location is represented using the cabinet and carrier where the tone-clock resides (e.g. 1a, 1b, 2a, 2b, etc.).
Service State	This field represents the operational state of the tone-clock circuit pack. A service state of "in" means the tone-clock has been installed and is in normal operation. A service state of "out" means that the tone-clock is out of service and has failed certain maintenance tests.
System Clock	This field shows which tone-clock circuit pack supplies the system clock for that port network by displaying the mode of the tone-clock. An "active" mode means that the tone-clock supplies the system clock. Only one tone-clock in each Port Network can have a mode of "active" at any given time. A "standby" mode means the tone-clock is part of a duplicated clock system and is ready to supply the system clock, but is not currently "active." A "down" mode means the tone-clock is not operational.
System Tones	This field shows which tone-clock circuit pack supplies the system tones for that port network by displaying the mode of the tone-clock. An "active" mode means that the tone-clock supplies the system tones. Only one tone-clock in each Port Network can have a mode of "active" at any given time. A "standby" mode means the tone-clock is part of a duplicated clock system and is ready to supply system tones, but is not currently "active." A "down" mode means the tone-clock is not operational.
PKT	This field contains the Packet Bus identifier, which is the same as the Port Network number.

Service State	This field represents the operational state of the packet bus. A service state of "in" means the packet bus has been installed and is in normal operation. A service state of "out" means that the packet bus is out of service and has failed certain maintenance tests, or the maintenance object has been demand busied out. A service state of "reconfig" means that the Maintenance/Test circuit pack has swapped one or more signal leads because of lead faults detected during testing (Duplex System Only). A service state of "open lds" means the Maintenance/Test circuit pack query was run and open bus leads were found. A service state of Blanks in this field means the system does not have the Packet Bus feature optioned.
Major Alarms	Whether major alarms are logged against the packet bus that is being displayed ("y" or "n").
Minor Alarms	Whether minor alarms are logged against the packet bus that is being displayed ("y" or "n").
Bus Faults	This field indicates the number of faulty bus leads, where a fault is defined as either shorted to another lead or stuck at some value. This field may take on any integer value between 0 and 24. The field contains a blank if the Maintenance/Test circuit pack is not present or has been taken out of service.
Open Bus Leads	This field indicates the number of bus leads that have an open circuit between the Maintenance/Test circuit pack and bus terminator. This information is determined by testing performed on the bus leads; bus leads test open as a result of physical damage to the backplane or the backplane's connectors, or because a bus terminator is missing. This field may contain integer values between 0 and 24. This field contains a blank if the Maintenance/Test circuit pack is not present or has been taken out of service.

The following display shows a typical result when **status port-network 2** is entered.

```
status port-network 2
                              PORT NETWORK STATUS

    Major   Minor   Warning  Carrier  PNC  Status   FIBER-
PN  Alarms  Alarms  Alarms   Locs   Active Standby  LINK   Endpoints   Mode

2     1       4       2      02A      up      up    2 A-PNC 02A01-01E03 active
                             02B                    2 B-PNC 02B01-01D03 standby
                             02C
                             02D


TDM   Service Control Dedicated              TONE/ Service  System    System
Bus    State  Channel   Tones                CLOCK State    Clock     Tones

 A     In       y         n                  02A   In       Active    Active
 B     In       n         y                  02B   Out      Standby   Standby

               Service     Major   Minor   Bus    Open Bus
           PKT  State       Alarms  Alarms  Faults  Leads

           2    out           n       n       0       0
```

Status PRI-Endpoint

status pri-endpoint extension [print]

This command applies only to G3 V2 systems only. The status pri-endpoint command displays internal software state information which can help in diagnosis or locating facilities with which a PRI endpoint is communicating. Status information for each of the B-channels making up the PRI endpoint and some overall PRI endpoint information is displayed.

Output

Extension	The extension of the PRI endpoint.
Width	The number of B-channels associated with the specified PRI endpoint.
Signaling Group ID	The ID number of the signaling group which handles the signaling for the ports in the specified PRI endpoint.
Originating Auto Restoration	Whether the auto restore feature is enabled. The auto restore feature restores calls originated from this PRI endpoint in the case of network failure.
B-Channels Active	The number of B-channels active on a call.
B-Channels Idle	The number of B-channels in the in-service/idle state.
Port	Port locations (cabinet-carrier-slot-circuit) for each of the B-channels that make up the PRI endpoint.
Service State	One of the following service states is displayed for each B-channel: in-service/active in-service/idle out-of-service-NE out-of-service-FE maint-NE/active maint-FE/active maint-NE/idle maint-FE/idle NE (Near End) and FE (Far End) refer to which end of the B-channel has placed the facility in its current state. NE indicates the switch. FE indicates the PRI terminal adapter or any device that terminates the D-channel signaling on the facility.
Test In Progress	Whether there is any maintenance testing being performed on the port.
Connected Port	The location of the port (cabinet-carrier-slot-circuit) connected to each of the B-channels active on a call.

The following display shows a typical result when **status pri-endpoint 2250** is entered and the PRI endpoint on extension 22501 is assigned B-channels on port circuits 1 through 6 on the circuit pack in cabinet 1, carrier C, slot 20. In the example, ports 1 to 3 are connected on an active call to ports 13 to 15 of the

circuit pack in cabinet 1, carrier C, slot 19. Ports 4 and 5 of the are idle. Port 6 is out of service and background maintenance is testing the port. PRI endpoint equipment can initiate or receive a call on any one or more of the B-channels making up the PRI endpoint. The listing may continue on to the next page, in which case the user is prompted to press NxtPg to continue the display.

```
status pri-endpoint 22501                            page 1 of 1

                           PRI-ENDPOINT STATUS

                     Extension: 22501                     Width: 6
          Signaling Group ID: 3             B-Channels Active: 3
Originating Auto Restoration? n               B-Channels Idle: 2

Port       Service State          Test In Progress    Connected Port

01C2001    in-service/active             n            01C1913
01C2002    in-service/active             n            01C1914
01C2003    in-service/active             n            01C1915
01C2004    in-service/idle               n
01C2005    in-service/idle               n
01C2006    out-of-service-NE             y



Command Successfully Completed
```

Status Processor-Channel

status processor-channel channel# [print]

The status processor-channel command displays the status of the specified processor channel and the values of its various counters. A processor channel is one of 128 logical channels associated with an SCI link. Each processor channel terminates in the switch processing element with a session.

Parameters

channel number	The processor channel number (1-128).

Output

Channel Number	The processor channel number 1-128.
Channel Status	The state that the channel is in: 1-16. The following describes the various channel states:
Reset Count	The number of times that the reset has been issued for this channel.
Message Buffer Number	The number of message buffers currently allocated for communications on this channel.
Link Number	The physical BX.25 interface link, 1-16, associated with the channel.
Retransmission Count	The number of times that message retransmission has occurred.

The following display shows a typical result when **status processor-channels 1** is entered.

```
status processor-channels 1

                     PROCESSOR CHANNEL STATUS

                  Channel Number: 1
                  Channel Status: 11: Administered but not connected
                     Reset Count: 0
           Message Buffer Number: 0
                     Link Number: 3
            Retransmission Count: 0
```

Status Signaling-Group

status signaling-group group# [print]

This command displays the service state, type, port location, and of the primary and secondary D-Channels within an ISDN-PRI signaling group. A signaling group is a set of B-channels signaled for by a designated single D-channel or combination of D-channels.

Parameters

group# An administered number associated with each signaling group.

Output

Group ID: An administered number from 1 to 666 that identifies the signaling group.

Type: See ISDN-SGRP in Chapter 9, "Maintenance Object Repair Procedures" for more information about group types.

- facility associated signaling: All members are carried on a single DS-1 facility. Facility-associated signaling groups support only simplex D-channel configuration.
- non-facility associated signaling: Members can include trunks on several different DS-1 facilities. The DS-1 facility is identified across the ISDN-PRI using an explicit facility identifier. A single D-channel on one of the facilities is used to signal for all members. In a duplex configuration, a second D-channel is assigned to act as a backup in case the primary signaling channel fails.

Group State: The operational state of D-channel providing signaling for the group: `in-service` or `out-of-service`. In duplex configurations, this field displays `in-service` if either D-channel is functioning.

The following information is given for both primary and secondary D-channels, if any.

Link: The number of the link carrying the D-channel.

Port: The location of the port carrying the D-channel.

Level 3 State: The operational state of the primary and secondary D-channels:

in-service	The D-channel is functioning.
standby	The link is established but the D-channel is not currently being used for layer 3 signaling.
wait	This is a transitional state in the process of progressing to the in-service state. The switch has sent an ISDN SERVICE message requesting establishment of layer 3 communications, and is awaiting a SERVICE ACKNOWLEDGE message from the far end to put the D-channel into service.
maintenance busy	The D-channel is no longer in the multiple-frame-established state at layer 2. When an active D-channel in a duplex signaling group fails, it is placed into this state and an interchange to the standby D-channel takes place. When layer 3 signaling is re-established over the new D-channel, the failed D-channel is moved from this state to out-of-service and restarted. If the link is successfully re-established, it is put into the standby state.
manual-out-of-service	The link carrying the D-channel has been busied out by command.
out-of-service	The D-channel is down.
no-link	A link has not been administered for this D-channel on the signaling-group form.

The following display shows a typical result when **status signaling-group 1** is entered.

```
status signaling-group 1                        Page 1 of   1   SPE A
                         STATUS SIGNALING-GROUP


        Group ID: 1
            Type: facility associated signaling
     Group State: in-service


                           Primary D-Channel


   Link: 1      Port: 01C1924    Level 3 State: in-service


                          Secondary D-Channel


   Link:        Port:            Level 3 State:
```

Status SPE

status spe [print]

The status spe command displays a page of output summarizing the condition of the active and standby (if the system is duplicated) SPE(s) in the system. If the SPEs are not duplicated, the fields in the standby SPE column will be blank.

Output

Duplicated?	This field specifies whether the system is a duplex SPE system ("yes" or "no").
SPE Selected:	If the system is a duplex SPE system, this field displays which SPE is locked active by the position of the duplication interface circuit pack Select-switches. If "spe a locked active" is displayed, then the SPE in cabinet 1 and carrier A has been locked active (both duplication interface circuit pack switches are switched left). If "spe b locked active" is displayed, then the SPE in cabinet 1 and carrier B has been locked active (both duplication interface circuit pack switches are switched right). If "auto" is displayed, it means the switches are in any other combination of positions besides both left or both right. If blanks are displayed, the system is not a duplex SPE system (there are no duplication interface boards).
Standby Busied?	This field specifies whether the standby SPE is busied out ("yes" or "no"). Blanks are displayed if the system is not a duplex SPE system.
Standby Refreshed?	This field specifies whether the standby SPE's memory has been completely refreshed ("yes" or "no"). Blanks are displayed if the system is not a duplex SPE system.
Standby Shadowing:	This field specifies whether the standby SPE's memory is currently being updated when changes are made to the active SPE's memory ("on" or "off"). Blanks are displayed if the system is not a duplex SPE system.
Standby Handshake:	This field specifies whether the software running on the standby SPE's duplication interface board is communicating to the software on the active SPE's duplication interface board ("up" or "down"). Blanks are displayed if the system is not a duplex SPE system.

Recent Spontaneous Interchange?	This field specifies whether a spontaneous interchange has occurred within the last hour. If this field displays "yes," a spontaneous interchanges has occurred within the last hour. If the field displays "no" a spontaneous interchange has not occurred within the last hour, or a technician has purposely reset this field in the software. Immediately following a spontaneous interchange, the field is set to "yes." While the field displays "yes," the health of the standby SPE can never be better than "partially functional," and an interchange can not occur unless the health of the active SPE drops below "partially functional." Recent interchange mode can be cleared by either **test spe-standby long** or **busyout spe-standby**. This condition clears automatically one hour after the interchange occurred. This field will be blank in a simplex SPE system.
Mode:	The mode is the current role of the SPE. "`active`" indicates that this SPE is controlling the network and providing services for the system. `standby` indicates that this SPE is part of a duplicated system and is not currently active. Blanks indicate that the system has a simplex SPE.
Select Switch:	This field shows the position of the SPE Select-switch on the duplication interface circuit pack. The Select-switch can be in three different positions. A position of "spe a" means the switch is switched left. A position of "spe b" means the switch is switched right. A position of "auto" means the switch is in the center position. "unavail" means the duplication interface circuit pack has been removed (the board has been unseated). Blanks mean that the system is not duplicated and there is no Select-switch due to there being no duplication interface boards.
Major Alarms:	The number of major alarms logged against the SPE are displayed in this field. Blanks in the standby fields mean that the system is not duplicated and a standby SPE does not exist. The category **spe** may be entered on the **display alarms** or **display errors** forms to view all alarms or errors logged against SPE maintenance objects.
Minor Alarms:	The number of minor alarms logged against the SPE are displayed in this field. Blanks in the standby side mean that the system is not duplicated and a standby SPE does not exist. The category **spe** may be entered on the **display alarms** or **display errors** forms to view all alarms or errors logged against SPE maintenance objects.

Warning Alarms:	The number of warning alarms logged against the SPE are displayed in this field. Blanks in the standby side mean that the system is not duplicated and a standby SPE does not exist. The category **spe** may be entered on the **display alarms** or **display errors** forms to view all alarms or errors logged against SPE maintenance objects.
State of Health:	On a duplicated SPE system, these fields each display one of the following states of health for each SPE: "functional," "partially functional," "not refreshed," or "not functional". If the system has a simplex SPE, the state of health fields for both the active and the standby SPEs will display nothing. A health of "functional" means that the SPE has no service disrupting alarms. A health of "partially functional" means that the health of the SPE has been degraded (possibly service disrupting). A health of "not functional" means that the associated SPE is not cycling at all (no service). A health of "not refreshed" means that the standby SPE's memory has not been refreshed with the active SPE's memory, but it is otherwise healthy and cycling correctly.
Tape State:	This field represents the operational state of the tape device. A service state of "in-service" means the tape has been installed and is in normal operation. A service state of "out-of-service" means that the tape is out of service and has failed certain maintenance tests. A state of "maintenance-busy" means the tape is busied out. Blanks mean the tape device is not installed or the system has a simplex SPE.
Disk Present?	If a disk device resides on the SPE this field will display "yes," otherwise, the field will display "no." A blank in the SPE-B side indicates the system has a simplex SPE.
Disk State:	This field represents the operational state of the disk device. A service state of "in-service" means the disk has been installed and is in normal operation. A service state of "out-of-service" means that the disk is out of service and has failed certain maintenance tests. A state of "maintenance-busy" means the disk is busied out. Blanks are displayed on the SPE-B side when the system is not duplicated.

The following display shows a typical result when **status spe** is entered on a duplicated system

.

```
status spe                                                          page 1 of 1
                                 PROCESSOR COMPLEX

                                   Duplicated? yes
                                 SPE Selected: auto
                               Standby Busied? no
                            Standby Refreshed? yes
                            Standby Shadowing: on
                            Standby Handshake: up
              Recent Spontaneous Interchange? no

                  SPE-A                                   SPE-B

            Mode: active                            Mode: standby
   Select Switch: auto                     Select Switch: auto
    Major Alarms: 0                         Major Alarms: 0
    Minor Alarms: 0                         Minor Alarms: 0
  Warning Alarms: 0                       Warning Alarms: 0
 State of Health: functional            State of Health: functional
      Tape State: in-service                 Tape State: in-service
    Disk Present? yes                       Disk Present? yes
      Disk State: in-service                  Disk State: in-service
```

Status SP-Link

status sp-link [print]

This command displays a summary of the operational state of the system printer link.

Output

Link State:	The operational state of the link:	
	up	A call is currently set up to the system printer.
	down	The link is administered but a call is not currently set up to the printer.
	extension not administered	An extension has not been administered for the system printer on the features-related system parameters form.
Number of Retries:	The number of times the switch has tried to establish the link since a request to set it up has been received. This field is displayed only when the link is down. The maximum value displayed is 999.	
Maintenance Busy?	Whether maintenance testing is being performed on the system printer link. A blank is displayed if the system printer link is not administered.	

The following display shows a typical result when **status sp-link** is entered.

```
status sp-link                                              SPE A

                       SYSTEM PRINTER LINK STATUS

        Link State: down
 Number of Retries: 0
  Maintenance Busy? no
```

Status Station

status station extension [print]

The status station command displays internal software state information for diagnosis. This command can help locate facilities to which the station is communicating.

Output

Type	The type of equipment administered for the extension.
Extension	The extension number specified on the command line.
Port	The location of the port assigned to the station.
Call Park	Whether the station has a call parked.
Ring Cut Off Activated	Whether ring cut-off is activated.
CF Destination Ext	The extension of the call forwarding destination.
Message Waiting	The location of any active messages for the station: `AUDIX`, `PMS` or `AP-SPE`. The field is blank if no messages are waiting.
Connected Ports	Locations of ports currently connected to the station.
Agent Logged In	Numbers of hunt groups that the agent is currently logged into. A maximum of three groups is displayed.
On ACD Call?	Whether the agent is currently on an ACD call.
Work Mode	Work mode of each hunt group that an agent is logged into.
Service State	The service stat of the station: in-service/on-hook, in-service/off-hook, out-of-service, or disconnected.
Maintenance Busy?	Whether maintenance is currently testing the object.
SAC Activated	Whether send-all-calls is activated.
User Cntrl Restr	Which, if any, restrictions are placed on the individual terminal: total — The station cannot originate or receive calls. stat-stat — The station cannot originate or receive calls to other stations. outward — The station cannot originate calls to the public network. terminate — The station cannot receive calls. none
Group Cntrl Restr	Whether the station is restricted as part of a restricted group. Values are the same as for the above field, `User Cntrl Restr`.

AWU Call at	If an automatic wakeup call is scheduled, this field displays the time scheduled for the call.
DND	Status of the do not disturb feature.
Room Status	Whether a room is `occupied`, `vacant`, or a `non-guest room`.

The following display shows a typical result when **status station 1002** is entered.

```
status station 1002

                           GENERAL STATUS

             Type: 7405D           Service State: in-service/on-hook
        Extension: 1002               Maintenance Busy? no
             Port: 01C0702               SAC Activated? no
      Call Parked? no                 User Cntrl Restr: none
  Ring Cut Off Act? no               Group Cntrl Restr: none
CF Destination Ext:
   Message Waiting:
   Connected Ports:


             ACD STATUS                        HOSPITALITY STATUS
    Agent Logged In   Work Mode           AWU Call At:
                                                  DND: not activated
                                          Room Status: non-guest room

       On ACD Call? no
```

Status Switch-Node

status switch-node SN# [print]

This command displays the operational status and attributes of the user specified switch node. The operational status of the active and standby switch node Clock(SNC) circuit packs for the switch node are displayed along with any alarms logged against the specified switch node.

Parameters

SN number	Normally switch node 1 is located in the PPN cabinet, and switch node 2, if present, is located in the nearest EPN cabinet. The switch node number defaults to 1.

Output

A line of information is displayed for each switch node carrier.

Switch Node	The switch node number, 1 or 2. If the PNC is duplicated, the A and B PNCs are each reported separately.
Location	The physical position of the switch node carrier represented as "UUc". Where "UU" represents the cabinet number and "c" represents the carrier. The simplex PNC configuration will display only one switch node location, while the duplex PNC configuration will display the active and standby switch node locations.
Mode	The mode is the current role of the switch node carrier. A mode of "active" means the SN is providing normal circuit and control functions for PNC. A mode of "standby" means the SN is ready to become active, but is currently not active. If blanks are displayed it means that PNC is not duplicated.
Major Alarms	The number of major alarms logged against the switch node carrier that is being displayed.
Minor Alarms	The number of minor alarms logged against the switch node carrier that is being displayed.
Warning Alarms	The number of warning alarms logged against the switch node carrier that is being displayed.
Active SNC Location	The physical position of the active switch node Clock circuit pack, per administration, represented as "UUcSS." "UU" represents the cabinet number, "c" represents the carrier, and "SS" represents the slot position. If an SNC is administered but not inserted, "no board" will be displayed.
Standby SNC Location	The physical position of the standby switch node Clock circuit pack, per administration, represented as "UUcSS." "UU" represents the cabinet number, "c" represents the carrier, and "SS" represents the slot position. Blanks will be displayed if there is no standby switch node Clock for a given switch node. If an SNC is administered but not inserted, "no board" will be displayed.

The following display shows a typical result when **status switch-node** is entered.

```
status switch-node 1                                              page 1 of 1

                                switch node STATUS

                                Major   Minor   Warning  Active SNC  Standby SNC
Switch Node  Location  Mode     Alarms  Alarms  Alarms   Location    Location

 1  A-PNC      01E     active    0       0       0      01E10       01E12
 1  B-PNC      01D     standby   0       1       2      01D10       01D12
```

Status Synchronization

status synchronization [print]

The status synchronization command displays the location of the DS1 or tone-clock circuit pack that is used for an on-line synchronization reference.

The synchronization subsystem provides error free digital communication between the switch and other PBXs, COs, or customer premise equipment. The subsystem is made up of system components involved in synchronization: TDM bus clock, DS1 trunk board, maintenance and administration software resident in the SPE.

Output

Stratum Level	The type of synchronization implemented in the system: 3 or 4.
Maintenance Name	The type of the circuit pack providing the timing reference: TONE-BD, DS1-BD OR STRAT-3.
Physical Location	The board location of the selected DS1 or tone-clock circuit pack. This includes the cabinet-carrier-slot for a DS1 or the cabinet-carrier for a tone-clock.
Switching Capability	Whether the on-line reference for synchronization can be switched. Enabled and Disabled are used to describe the current capacity for reference switching.
Excessive Reference Switching	This field gives a high-level description of how many times the synchronization reference has been switched. If excessive reference switching is taking place, (SYNC error 1793 is at threshold), this field displays Yes. No is displayed otherwise.

The following display shows a typical result when **status synchronization** is entered.

```
status synchronization

                          SYNCHRONIZATION STATUS

                Stratum Level:4
              Maintenance Name: UDS1-BD      Physical Location: 01D08
          Switching Capability: Enabled
Excessive Reference Switching: No
```

Status Sys-link

status sys-link UUCSSpp [channel channel#] [print]

The status sys-link command displays status data for a specified system link. The report includes the type and operational state of the link, the associated processor channel, if any, active alarms and path status, and a list of all hardware components making up the link's path. If in addition to the current path a faulted path exists, the components making up the faulted path are displayed on page 2 of the report.

Parameters

UUCSSpp	The link is specified by giving the location of the port associated with the link.
channel#	If the link is an X.25 link (to an adjunct or another switch), you must specify a processor channel number (1-128) associated with the link.

Examples

status sys-link 1e0201
status sys-link 1c17 channel 2

Output

Location	The location of the port associated with the system link (cabinet-carrier-slot-circuit).
Type/Chan	The type of system-link and the channel number of the link (for X.25 links) as follows: EAL Expansion Archangel Link INL Indirect Neighbor Link (Center Stage Switch) PGC Packet Gateway Call-Control Link PRI ISDN-PRI signaling Link SAP System Access Port Link X25 X.25 Link to an adjunct or DCS
Alarms	The highest level of alarm currently logged against the components making up the link.
Current Path	The operational status of the current path: none The link is down. present The current path displayed below is valid.
Faulted Path	The status of the faulted path, if any: present The path of the link has been faulted at least once. none There is no record of the link having gone down. default The default faulted path is being used.
Last Fault	The date and time at which the most recent fault occurred.
State	Whether the system link is "up" or "down."
Current Hardware Path	The location, maintenance name, and alarm information for each hardware component making up the current path of the link. The path begins at the Packet Interface in the SPE and terminates at the circuit path that terminates the other end of the link.
Faulted Hardware Path	If the link encounters a fault, the system will reroute it if possible over an alternate route. If this has taken place, the faulted path is displayed on page 2 of the report. The location, maintenance name, and alarm information for each hardware component making up the most recent faulted path is shown.

The following display shows a typical result when **status sys-link 2a0101** is entered. In the following case, the link encountered a fault and recovered by

switching to a different inter-switch-node fiber.

```
status sys-link 2a0101                                  Page   1 of   2   SPE A
     Location: 02A0101       Type/Chan: EAL             Alarms: none
 Current Path: present    Faulted Path: present    Last Fault: 12/30/1991 14:18
        State: up
                              Current Hardware Path

             Maintenance                            Maintenance
 Location    Name       Alarms            Location    Name       Alarms

 01A1        PKT-INT    none
 PN 01       PKT-BUS    none
 01E01       EXP-INTF   none
 1 A-PNC     FIBER-LK   none
 01E02       SNI-BD     none
 01E09       SNI-BD     none
 7 A-PNC     FIBER-LK   none
 02E09       SNI-BD     none
 02E02       SNI-BD     none
 2 A-PNC     FIBER-LK   none
 02A01       EXP-INTF   none
```

```
status sys-link 2a0101                              Page   2 of   2   SPE A
     Location: 02A0101       Type/Chan: EAL           Alarms: none
 Current Path: present    Faulted Path: present  Last Fault: 12/30/1991 14:18
        State: up
                              Faulted Hardware Path
             Maintenance                                     Maintenance
 Location    Name       Alarms               Location    Name       Alarms

 01A1        PKT-INT    none
 PN 01       PKT-BUS    none
 01E01       EXP-INTF   none
 1 A-PNC     FIBER-LK   none
 01E02       SNI-BD     none
 01E13       SNI-BD     none
 6 A-PNC     FIBER-LK   none
 02E13       SNI-BD     none
 02E02       SNI-BD     none
 2 A-PNC     FIBER-LK   none
 02A01       EXP-INTF   none
```

Status Trunk

status trunk group# [/ member#] [print]

The status trunk command displays information about the operational status of a single trunk or of all members of a trunk group. You can also use it to locate facilities with which the trunk is communicating.

The **monitor trunk** command displays the same information and updates the screen automatically every minute or on demand.

Parameters

group#/member#	If you enter a trunk group number without a member number, then information for all members of that group is displayed as shown in the second screen shown below. If you enter a trunk group and a member number separated by a slash (/), then information for only that member, including some additional fields, is displayed as shown in the first screen shown below. If you enter a group number followed by only a slash (/), then the system defaults to member number 1 and displays the member report.

Examples

status trunk 78
status trunk 80/2 print

Output

Trunk Group/Member	Group and member numbers of specified trunks.
Port	The location of the port associated with the trunk.
Signaling Group ID	For ISDN trunks, the number of the signaling group to which the trunk group belongs. For other trunk types, the field is blank.
Connected Ports	Locations of ports currently connected to the trunk.
Service State	One of the following states is displayed: in-service/active, in-service/idle, out-of-service, out-of-service-NE (Near End), out-of-service-FE (Far End), maint-NE/active, maint-FE/active, maint-NE/idle, maint-FE/idle, pending-in-service, pending-maint, or disconnected. NE (Near End) and FE (Far End) refer to which end of the trunk has placed the facility in its current state. Explanations of these service states for each type of trunk appear in the maintenance object descriptions in Chapter 9, "Maintenance Object Repair Procedures".
Maintenance Busy	Whether maintenance testing is currently being performed upon the trunk.
CA-TSC State	The status of the call-associated temporary signaling connection, if any. A TSC is a temporary connection set up to pass call information over ISDN-PRI signaling links.

The following display shows a typical result when **status trunk 20/1** is entered.

```
status trunk 20/1
                                TRUNK STATUS

Trunk Group/Member: 020/001                     Service State: in-service/idle
              Port: 01D0801                Maintenance Busy? no
Signaling Group ID: 1                          CA-TSC State: none
   Connected Ports:
```

The following display shows a typical result when **status trunk 1** is entered for a trunk group with two members.

```
status trunk 1

                        TRUNK GROUP STATUS

Member   Port      Service State     Mtce Busy  Connectd Ports
01/01    01A0101   in-service/idle    no        01A0501  02B0607
01/02    04A0702   in-service/idle    no        04C0604
```

Status TSC-Administered

status tsc-administered signaling-group# [/tsc-index] [print]

This command displays the operational status of temporary signaling connections (TSCs) administered for a specified signaling group.

Examples

status tsc-administered 1
status tsc-administered 1/2 print

Parameters

signaling-group#	An administered number associated with each signaling group.
tsc-index	A number associated with each TSC in a signaling group.

Output

TSC Index	The administered TSC index (1-759).
TSC State	A state of "inactive" means that the administered TSC is not functioning (i.e. D-Channel out-of-service, or disabled, etc.). A state of "active" indicates that the administered TSC is up and user information can be exchanged end-to-end. A state of "pending-inactive" shows that the TSC is being released. A state of "pending-active" means that the TSC is about to come up.
Establish	This field pertains to the switch responsible for the origination of the administered TSC. A state of "as-needed" shows that the TSC is established on an as needed basis. A state of "permanent" shows that the TSC is permanently established.
Enabled	"Y" indicates that the administered TSCs have been enabled.
Congested	A congested state indicates that the network cannot handle the receipt of USER INFORMATION messages for the administered TSC. "Yes" indicates that the administered TSC is congested. "No" indicates that the administered TSC is not congested. "Clear" indicates that TSC was congested during its active period and the congestion has been cleared.

The following display shows a typical result when **status tsc-administered 1/1** is entered.

```
status tsc-administered 1/1
                 ADMINISTERED NON-CALL-ASSOCIATED TSC STATUS

TSC        TSC
Index      State            Establish     Enabled     Congested

1          inactive         as-needed     yes         no
```

Status TTI

status tti [print]

This command displays the operational status of the Terminal Translation Initialization (TTI) background maintenance task. The TTI Background maintenance task is activated by enabling the TTI feature on the system-parameters features administration form. See *DEFINITY Communications System Generic 3 V2 Implementation,* 555-230-653.

Output

TTI Background Task State:	One of the following:
	`generating TTI ports`
	`removing TTI ports`
	`suspended`
	`not active`
	`completed - all ports translated`
	The last execution of the background task completed normally.
	`completed - some ports not trans`
	The task completed due to resource exhaustion with some ports left untranslated.

TTI State:	`off` The TTI feature is not enabled. `voice, data` The type of TTI ports that are being generated or removed
# of Boards Completed:	Number of TTI-supported circuit packs that have been processed by the background maintenance task. A "completed" circuit pack has either had all its unadministered ports translated as TTI ports or its TTI ports have been removed and are now unadministered ports.
# of Boards Left to Process:	Number of TTI-supported circuit packs that have not yet been processed by the background maintenance task.
Percent Complete:	A ratio of the of number of circuit packs completed to the total number.
Elapsed Time Since Task Started:	Elapsed time in hours:minutes:seconds since the TTI background task was started. This field is blank if the task is not active. If the task is completed or suspended, this field displays the elapsed time up to when the job finished or was suspended.

The following display shows a typical result when **status tti** is entered.

```
status tti
                                TTI STATUS
          TTI Background Task State:  completed - all ports translated
                            TTI State:  voice
              # of Boards Completed:  30
         # of Boards Left to Process:  0
                   Percent Complete:  100
    Elapsed Time since Task Started:  0 :0 :1
```

Test Access-Endpoint

test access-endpoint extension [short | long] [repeat#] [schedule]

This command applies only to G3 V2 systems.

The test pri-endpoint command performs hardware diagnostic tests on all port circuits associated with the specified access endpoint.

Output

Text results are displayed on a port-by-port and test-by-test basis with one line of data for each test run.

Maintenance Name	The type of maintenance object that is being busied out: `WAE-PORT` for wideband access endpoints, or `TIE-DS1` for single port access endpoints.

For more information, see "Common Input Parameters" and "Common Output Fields" at the beginning of this chapter. The following display shows a typical result when **test acc 22501 sh** is entered and B-channels of the endpoint are

assigned to port circuits 1 through 3 of the circuit pack in cabinet 1, carrier C, slot 20.

```
test access-endpoint 22502 short                    page 1 of 1

                             TEST RESULTS

Port      Maintenance Name  Alt. Name Test No. Result  Error Code

01C1101   WAE-PORT          22502       36     PASS
01C1102   WAE-PORT          22502       36     PASS
01C1103   WAE-PORT          22502       36     PASS
01C1104   WAE-PORT          22502       36     PASS
01C1105   WAE-PORT          22502       36     PASS
01C1106   WAE-PORT          22502       36     PASS





 Command Successfully Completed
```

Test Alarms

test alarms **[auto-page] [failures] [step]**

[short | long]

[repeat number | clear]

This command allows you to automatically test all hardware with active alarms in the alarm log. An input form is displayed on which you can specify which alarms and hardware to test. After completing the form, press Enter to execute the tests. Results are displayed on the standard test output form, and status information is displayed on the message line as the command progresses.

It is possible for several alarms to be logged against a single maintenance object, representing one or more different problems. In any case, the test alarms command tests each alarmed maintenance object once.

Parameters

auto-page — This option provides the ability to continue testing and displaying test results, by providing a new screen every time the G3-MT screen is filled with test results. The screen does not scroll to accommodate new results; instead a new screen is provided after the current screen fills up.

If the auto-page option is not specified, the G3-MT screen will not be refreshed once it is filled with test results and testing will stop until the user enters PAGE to continue or CANCEL to halt the testing.

failures — This requests that only the failures be displayed on the lower half of the screen. All passes will not be displayed on the output screen. Hardware failures as well as aborts, conflicts and EPN-down failures will be displayed on the lower half of the screen.

step — This option allows you to step to the next or previous alarm and bypass testing of the current alarm. When this option is specified, you are presented with the alarm information and prompted for a keyboard entry. You may enter CANCEL to abort the command, ENTER to test the currently displayed alarm, NEXT ALARM (function key) to move to the next alarm, PREV ALARM (function key) to move to the previous alarm. If this option is given, then the NEXT ALARM (function key) or PREV ALARM (function key) may be pressed at any time during command execution (even during test results). If the NEXT ALARM or PREV ALARM is pressed during a test, the test is aborted, testing of the current alarm stops, and the next alarm or previous alarm is displayed. If the first alarm is displayed, and the PREV ALARM is pressed, then the last alarm is displayed. If the last alarm is currently displayed, and the NEXT ALARM is requested, then the first alarm will be shown. With this option, you must press Cancel to terminate the command.

For more information see "Common Input Parameters" at the beginning of this chapter.

NOTE:
Using the **short clear** combination may not clear all alarms even if all tests pass.

Examples

test alarms sh r 3
test alarms long clear auto-page

Input Form

After the command is entered, an input form is displayed for selection of report options:

Alarm Types	Specify which types of active alarms you want to be tested by entering *y* or **n** in the Major, Minor and Warning fields.
Interval	This refers to the time period during which the alarms that you wish to test were logged. Enter **h** (last hour), **d** (last day), **w** (last week), or **a** (all). Interval defaults to all.
From To	You can specify a time period by start and end times. Enter month/day/hour:minute in the From and To fields. Leaving From blank will test active alarms starting with those logged one month ago. Leaving To blank will test alarms up to the present time.
Equipment Type	You can specify which hardware groups to test. The default is all hardware. ■ Cabinet: Specify a cabinet number form 1 to 22. ■ Port Network: Specify a port network number form 1 to 22. ■ Board Number: Specify a circuit pack with a UUCSS location. Cabinet number defaults to 1. ■ Port: Specify a port with a UUCSSpp location. Cabinet number defaults to 1. ■ Category: Specify an alarm category. See the list of categories at the beginning of this chapter. ■ Extension: Specify an extension number. ■ Trunk (group/member): Specify a trunk group or member.

```
test alarms repeat 1

                      HARDWARE TEST ALARM QUERY

        The following options control which alarms will be tested.

        ALARM TYPES
                    Major? y_         Minor? y_      Warning? y_

              REPORT PERIOD
                 Interval: _    From: __/__/__:__  To: __/__/__:__


        EQUIPMENT TYPE ( Choose only one, if any, of the following )

                             Cabinet: __
                        Port Network: __
                        Board Number: ____
                                Port: ______
                            Category: ________
                           Extension: _____
                 Trunk ( group/member ): __/__
```

Output

The responses, with normal output, will be displayed on a test-by-test basis with one line of data displayed for each test result. With the failures option only the tests that have failed will be displayed.

The following fields appear in the ALARM ENTRY section:

Port	The location of the alarmed object (cabinet-carrier-slot-circuit). This is the same identifier as used by the alarm log.
Maintenance Name	The logical name of the maintenance object which has been alarmed.
On Board	Whether the fault detected is on the associated circuit pack, or an off board element connected to the circuit pack.
Alt Name	An alternate means of identifying the maintenance object. See the description of alternate names at the beginning of this chapter.
Alarm Type	Major, Minor, or Warning. This is an indicator to the seriousness of the alarm raised.
Service State	RDY (ready for service), OUT (out of service), or IN (in service). This is the current service state of the station and trunk ports shown.

Ack	Whether or not INADS has acknowledged the alarm.
Date Alarmed	Day, hour, and minute of alarm.
Alarm Count	This field shows the count of the current alarm entry over total number of alarms to be tested.

For explanations of fields in the TEST RESULTS section, see "Common Output Fields" at the beginning of this chapter.

The following output example assumes that only one alarm is in the alarm log and it is on the circuit pack in cabinet 1, carrier c, slot 7. The command entered was "test alarms" and the query form was left empty by simply pressing ENTER and accepting the defaults.

```
test alarms short repeat 1
                                ALARM ENTRY

Port    Maintenance  On     Alt    Alarm  Svc    Ack?  Date      Alarm
        Name         Board? Name   Type   State        Alarmed   Count

01C07   ANL-BD       y           MAJOR           n    08/31/20:34 1/10

                                TEST RESULTS

Port       Maintenance Name  Alt. Name    Test No.  Result   Error Code

01C07        ANL-BD                          51                PASS
01C07        ANL-BD                          52                PASS

Command successfully completed
```

Test Analog-testcall

test analog-testcall	**trunk group# / member# | port UUCSSpp | board UUCSS [full | supervision | no-selftest | no-return-loss | no-st-or-rl] [repeat #] [schedule]**

The test analog-testcall command causes the Automatic Transmission Measurement System (ATMS) to originate a test calls over analog trunks. ATMS collects performance measurements on the test call and compares them to administered thresholds. Detail and summary reports of these measurements are generated with the **list testcalls** command.

You can specify testing of an entire trunk group or an individual trunk using either group/member addresses or port and circuit pack location. The type of test call, the number of the testing line on the far-end switch and various other parameters must be administered on the trunk group form before the command can execute.

ATMS, the operation of this command, and the measurement reports are described in *Automatic Transmission Measurement System (ATMS)* in Chapter 6, "Additional Maintenance Procedures".

Test Board

test board UUCSS [short | long] [repeat # **| clear] [schedule]**

The test board command will validate that the board exists at the specified location. Based on the logical type (e.g., Analog, Digital, Hybrid, etc.) of board a series of tests will be executed. Each individual test will exercise diagnostics on the board and then return results of the test along with any possible error codes.

Destructive long tests on a Switch Node Interface (SNI) board are not allowed unless the board has been busied out.

For more information see "Common Input Parameters" and "Common Output Fields" at the beginning of this chapter.

The following display shows a typical result when **test board 1D07** is entered and slot 1D07 hods a Digital Line circuit pack with 7 ports administered.

```
test board 1d07 short                                        SPE B

                              TEST RESULTS

Port      Maintenance Name  Alt. Name Test No. Result  Error Code

01D07     DIG-BD                       52       PASS
01D0701   DIG-LINE          5401       16       PASS
01D0701   DIG-LINE          5401       17       PASS
01D0702   PDMODULE          5460       17       PASS
01D0703   PDMODULE          5461       17       ABORT       5
01D0704   PDMODULE          5444       17       ABORT       5
01D0705   DIG-LINE                     16       ABORT       1392
01D0705   DIG-LINE                     17       ABORT       1392
01D0706   DIG-LINE          Attd2      16       PASS
01D0706   DIG-LINE          Attd2      17       PASS
01D0707   DIG-LINE          Attd1      16       PASS
01D0707   DIG-LINE          Attd1      17       PASS

Command Successfully Completed
```

Test CDR-Link

test cdr-link primary | secondary

[short | long] [repeat number | clear] [schedule]

The test cdr-link command validates that a call detail recording link has been administered and established.

Parameters

primary | secondary — A system may have up to two CDR links: a primary that is normally used and a secondary that serves as a backup in case the primary fails. This qualifier specifies which link to test. Primary is the default.

For more information see "Common Input Parameters" and "Common Output Fields" at the beginning of this chapter.

Test Customer-Alarm

test customer-alarm UUC [short | long] [repeat # | clear] [schedule]

The test customer-alarm command performs hardware diagnostic tests on the leads of the SYSAM or EPN Maintenance circuit pack in a specified cabinet. These leads are connected to customer equipment and provide a means of alerting the system administrator and INADS when that equipment fails. The alarm is activated when a relay on the connected equipment is closed for one minute.

The cabinet default is 1. The carrier need be specified only for PPNs with duplicated SPEs.

Test Data-Module

test data-module extension [short | long] [repeat # | clear] [schedule]

The test data-module command performs hardware diagnostic tests on a data module or a data channel. Test results are determined by the interface to the digital switch-data line port, digital line port, or network control data channel.

Test Disk

test disk [C] [short | long] [repeat # | clear] [schedule]

The test disk command performs a series of tests on the disk circuit pack and the disk media itself.

The cabinet is always 1 and need not be entered. Carrier a or b must be specified only for duplicated SPEs.

This command will abort if any other MSS operation has already begun.

Failure of the disk test may result in the disk being taken out of service. In this state, access to the disk by all system software except maintenance is blocked.

When the host-adapter is taken out of service due to test or reset failures and becomes uninstalled, the disk is also placed in the uninstalled state and all access by system software, maintenance tests, commands (including resets) is blocked.

Test DS1-Facility

test ds1-facility UUCSSf [short | long | external loopback] [repeat #] [schedule]

The test ds1-facility command performs a series of tests on the specified facility. Each individual test will exercise diagnostics on the facility and then return results of the test along with any possible error codes.

The **long** test is destructive and is not allowed unless the facility has been busied out.

Parameters

UUCSSf	A DS1 facility is specified by the location of the DS1 Converter circuit pack and a letter from **a** to **d** corresponding to the four facilities connected to the circuit pack.
external loopback	This specifies a destructive test that sends a test pattern to an external device and returns it for comparison to the original. You must first configure the external device to loop back the signal. See DS1-FAC and DS1C-BD in Chapter 9, "Maintenance Object Repair Procedures".

Examples

test ds1-facility 04a01d
test ds1-facility 03a01a sh c

Test DS1-Loop

test ds1-loop location [cpe-loopback-jack-test-begin [number-of-bits bit-pattern] | far-csu-loopback-test-begin | one-way-span-test-begin | end-loopback/span-test | inject-single-bit-error | ds1/csu-loopback-tests]

test ds1-loop - For TN464F or TN767E or later suffix DS1 Interface circuit packs, this command is used for loopback and one-way span testing of the DS1 span.

The test ds1-loop command will validate that the board exists at the specified location, that the board is a TN464F or TN767E or later suffix DS1 Interface board, and that the G3 Version of the switch software is V3 or later. Based on the command parameter, a long-duration loopback/span test or series of short-duration loopback tests will be executed.

Long-duration loopback test execute for an extended period of time until the system technician terminates it. Short-duration loopback tests return the result of the test to the screen when finished executing. The "**list measurements ds1 summary**" command should be used to monitor the status of a long-duration loopback/span test.

Logins with the following service levels may execute this command: craft, inads, init, super-user or logins with Maintain Switch Circuit Packs permissions enabled.

EXAMPLES

test ds1-loop 01c08
test ds1-loop 10c03 cpe-loopback-jack
test ds1-loop 10c03 cpe
test ds1-loop 10c03 end
test ds1-loop 02d12 fa
test ds1-loop 02d12 inj

Defaults

The default for the command is ds1/csu-loopback-tests.

Parameters

location	A "location" represents the physical position of the board to be tested. For G3V3 Standard cabinets a location is entered as "UUcSS" where "UU" represents the cabinet number, "c" represents the carrier, and "SS" represents the slot position. A single digit cabinet (1 - 9) may be entered with or without a leading zero (0).
cpe-loopback-jack-test-begin	For TN464F or TN767E or later suffix DS1 boards, this will cause a long-duration loopback test to be setup through the Customer Premises Equipment (CPE) Loopback Jack. The command allows the user to specify a loop-up code for the CPE loopback jack if it differs from the default of Ox47F. This loop-up code is entered by specifying the number of bits in the loop-up code as well as the actual bit-pattern (in hexadecimal). The test will abort if the board has not been taken out of service via the "busyout" command.
far-csu-loopback-test-begin	For TN464F or TN767E or later suffix DS1 boards, this will cause a long-duration loopback test to be setup through the far-end Channel Service Unit (CSU). The test will abort if the board has not been taken out of service via the "busyout" command.
one-way-span-test-begin	For TN464F or TN767E or later suffix DS1 boards, this will begin execution of a long-duration one-way span test. The test will abort if the board has not been taken out of service via the "busyout" command.

end-loopback/span-test	For TN464F or TN767E or later suffix DS1 boards, this parameter terminates long-duration one-way span and loopback testing.
inject-single-bit-error	For TN464F or TN767E or later suffix DS1 boards, this parameter causes a single bit error to be sent within an active framed 3-in-24 test pattern used in long-duration loopback and span testing.
ds1/csu-loopback-tests	For TN464F or TN767E or later suffix DS1 boards, this parameter will execute the following loopback tests: DS1 Board LoopBack, CSU Module Equipment LoopBack, and CSU Module Repeater LoopBack. These tests are performed sequentially for a short duration each, and individual PASS/FAIL/ABORT test results are reported following each test.

OUTPUT

The responses will be displayed on a test-by-test basis with one line of data displayed for each test result.

Port	The port address (cabinet-carrier-slot-circuit) of the maintenance object that is being tested.
Maintenance Name	The type of maintenance object that is being tested.
Alt. Name	The alternate means of identifying the maintenance object.
Test No	The actual test that is being executed.
Result	The result of the individual test - "PASS," "ABORT," "FAIL," "NO BOARD," "DISABLED," "EXTRA BD".
Error Code	A system-generated number that tells why the release failed or aborted. A detailed list of the codes according to "Test No." is provided for each MO.

For the following output example, assume that the board in cabinet 1, carrier c, slot 7 is a TN767E DS1 board. The command that was entered was "test ds1-loop 1c07".

```
test ds1-loop 01C07 ds1/csu-loopback-tests

                                  TEST RESULTS

 Port     Maintenance Name  Alt. Name Test No. Result         Error Code

  01C07     DS1-BD                      1209     PASS
  01C07     DS1-BD                      1210     PASS
  01C07     DS1-BD                      1211     PASS





Command Successfully Completed
```

FEATURE INTERACTIONS

Loopback or span tests will not be allowed on DS1 boards unless the board has been busied out.

Only one of the CPE Smart Jack, far-end CSU, one-way span, or DS1/CSU loopback tests may be active at any given time on a DS1 span.

Test Duplication-Interface

test duplication-interface [short | long] [repeat # | clear] [schedule]

The test duplication-interface command performs hardware diagnostic tests on the system's dupint circuit packs and interconnecting cable (DUPINT and DUP-CHL maintenance objects). Testing is under control of the active SPE. See descriptions of these maintenance objects in Chapter 9, "Maintenance Object Repair Procedures" for more details.

The DUP-CHL maintenance object is associated with both active and standby DUPINT boards and the interconnecting cable. The DUPINT maintenance object is associated with the active dupint board. There are five tests for the DUPINT maintenance object and an additional eight tests for the DUP-CHL maintenance object.

When testing the active and standby dupint circuit packs and the interconnection cable for an active SPE carrier, duplication channel components are only tested in one direction. By performing an SPE interchange, the duplication channel components can be tested in the other direction for complete testing. Further testing of the standby dupint board can also be done through the SPE-down

Command Interface with carriers locked. This interface can be used for general testing of the standby SPE when the SPE handshake is not functioning.

The duplication-interface test is invalid for an SPE simplex system. For SPE duplex systems, the presence of both DUPINT boards is assumed. In duplex SPE systems, any DUPINT communication failures will give FAIL or ABORT results on the output screen.

Loss of handshake between active and standby SPEs prevents testing of standby SPE components unless the SPE-down interface is used.

The **long** test sequence is destructive and requires that **busyout spe-standby** be executed first.

Output

Port	The physical address of the maintenance object that is being tested. For DUPINT the address is the cabinet (1) and carrier (A or B) of the active SPE. For DUP-CHL, the address is the cabinet and carrier of the standby SPE.
Maintenance Name	The type of maintenance object that is being tested.
Alt. Name	Not applicable.
Test No.	The number of the test being executed.
Result	An indicator as to whether the test failed, passed or was aborted.
Error Code	A numerical description of why the test failed or was aborted.

The following display shows a typical result when **test duplication-interface** is entered and A is the active carrier of a duplicated SPE system.

```
test duplication-interface

                              TEST RESULTS

Port  Maintenance Name  Alt. Name  Test No.    Result   Error Code

01B       DUPINT                     979      PASS
01A       DUP-CHL                    980      PASS
01A       DUP-CHL                    874      PASS
01A       DUP-CHL                    875      PASS
01A       DUP-CHL                    876      PASS

Command Successfully Completed
```

Test EDA-External-Device-Alrm

test eda-external-device-alrm all | physical location [repeat number | clear][schedule]

This test will perform hardware diagnostic tests on an individual external-device-alarm port or on all external-device-alarm ports.

The **test eda-external-device-alrm** command performs a hardware diagnostic test on all administered external device alarms if all is entered. If an administered external device alarm port is entered, the test external-device-alarm command performs a hardware diagnostic test on that port. The test PASSES if the external device is not reporting an external device alarm and FAILS if the external device is reporting an external device alarm. If the technician specifies the port it must be administered as an external device alarm port on a maintenance board or on an analog line port carrier board.

Defaults

The default for this command is a repeat of 1.

Parameters

physical location

In addition to entering the word "physical" the system technician must specify the physical location. For an administered external device alarm analog line port, a "physical location" represents the physical position of the port to be tested and is entered as "**UUcSSpp**" where "**UU**" represents the cabinet number (1-MAX_CABS), "**c**" represents the carrier, "**SS**" represents the slot position, and "**pp**" represents the circuit.

Since the "maintenance board" alarm connections connect to control carrier boards that are in unnumbered slots, the standard port format cannot be used to designate these alarm connections. The special ports **UUmajor** and **UUminor** are used designate the major or minor maintenance board alarm connection for cabinet **UU**.

NOTE:
The major/minor designation specifies the pair of wires, not the alarm level associated with the connection (*i.e.* the "major" port can be administered as a major, minor or warning alarm and the "minor" port can be administered as a major, minor or warning alarm).

The "all" location is used to test all administered external device alarm ports on analog line boards and maintenance boards.

repeat number

The "number" specifies how many times the “test physical location” is to be repeated. "Number" may be any integer between 1 and 100.

clear

This option causes the test sequence (short or long) to repeat until the alarm (if one exists against the maintenance object) is cleared or a single test in the sequence fails. If no alarms are registered against the maintenance object then the test sequence will be exercised only once.

schedule

When the "schedule" option is specified, the command is validated and then a scheduling form is displayed to allow the technician to schedule execution of the command. The command is then placed in the command queue and is executed at the specified time. The information displayed by the command is sent to the system printer instead of the screen. Refer to the Report Scheduler and System Printer feature specifications [1] for more details.

Examples

test eda-external-device-alrm all
test eda-external-device-alrm all schedule
test eda-external-device-alrm physical 1major r 10
test eda-external-device-alrm physical 2c1101 c

Output

For the following output example the command that was entered was "**test external-device-alarm all**":

```
test eda-external-device-alrm all

                              TEST RESULTS

  Port      Maintenance Name  Alt. Name Test No. Result           Error Code

  03major   EXT-DEV           CMS1      120      PASS
  03A2102   EXT_DEV           CMS2      120      FAIL
  01major   EXT-DEV           UPS1      120      PASS
  01minor   EXT-DEV           UPS1      120      PASS
  01c1201   EXT-DEV           UPS1      120      PASS
  03A2101   EXT_DEV           CC temp   120      PASS
  01c1202   EXT-DEV           Audix1    120      PASS
  03minor   EXT-DEV           Audix2    120      FAIL
  04major   EXT-DEV           unknown   120      FAIL









Command successfully completed
```

The responses will be displayed on a test-by-test basis with one line of data displayed for each test result.

Field definitions:

Port	The port address (cabinet-carrier-slot-circuit) of the maintenance object that is being tested.
Maintenance Name	The type of maintenance object that is being tested.
Alt. Name	The alternate means of identifying the maintenance object. This is an administered more descriptive name of the external device alarm
Test No	The actual test that is being executed.
Result	The result of the individual test -"PASS", "ABORT", "FAIL", "NO BOARD", "DISABLED", "EXTRA BD".
Error Code	A system-generated number that tells why the release failed or aborted. A detailed list of the codes according to "Test No." is provided for each MO.

Test Environment

test environment UU [short | long] [repeat # | clear] [schedule]

The test environment command performs hardware diagnostic tests of the environment monitoring and control, and emergency transfer functions of a specified cabinet. This command tests both PPN and EPN cabinets. Circuit packs involved are the SYSAM (PPN) EPN Maintenance, and tone/clock (for the ring generator test.

CAUTION:

*The **long** test recycles power on all port circuit pack carriers and is destructive. It does not recycle power on active or standby PPN or EPN control carriers or switch node carriers. When a port carrier is recycled, all service and links to ports on the carrier are dropped. If a carrier containing an active EI or tone-clock is recycled, all service to that cabinet will be disrupted.*

There are nine Maintenance Objects involved in this test:

EMG-XFER	POWER
AC-POWER	DC-POWER
CARR-POW	CABINET
RING-GEN	CUST-ALARM
EXT-DEV	

Note that although the CUST-ALARM maintenance object is part of the environment functionality, it is not actually tested using the 'test maintenance' command. See 'test customer-alarm' for details on testing this particular MO.

Output

The following display shows a typical result when **test environment 1** is entered in order to test the PPN cabinet.

```
test environment 1

                                  TEST RESULTS

Port   Maintenance Name  Alt. Name   Test No.  Result  Error Code

01        POWER                       5        PASS
01        AC-POWER                    78       PASS
01E       CARR-POW                    127      PASS
01D       CARR-POW                    127      PASS
01A       CARR-POW                    127      PASS
01B       CARR-POW                    127      PASS
01C       CARR-POW                    127      PASS
01        EMG-XFER                    124      PASS
01        CABINET                     122      PASS
01        EXT-DEV                     120      PASS
01        RING-GEN                    117      PASS
01        RING-GEN                    118      PASS


Command Successfully Completed
```

The following display shows a typical result when **test environment 2** is entered and cabinet 2 is a single carrier cabinet.

```
test environment 2

                                  TEST RESULTS

Port   Maintenance Name  Alt. Name    Test No.  Result  Error Code

04     DC-POWER                        79       PASS
04     EMG-XFER                        124      PASS
04     EXT-DEV                         120      PASS
04     RING-GEN                        117      PASS
04     RING-GEN                        118      PASS

Command Successfully Completed
```

Test Fiber-Link

test fiber-link link# **[a-pnc | b-pnc] [short | long] [repeat # | clear] [schedule]**

The test fiber-link command will validate that the optical fiber connection between switch node interfaces (SNI) and expansion interfaces (EI), or a combination thereof, are administered. If the fiber link is administered, a series of hardware diagnostic tests will be performed on the specified fiber link. The test results along with any possible error codes are displayed on the G3-MT. The long test sequence includes destructive tests. All destructive tests abort unless the fiber link is first busied out. The short test sequence is non-destructive and can be performed regardless of whether the fiber link is busied out.

A fiber link is a connection between port networks (PNs), switch nodes (SNs), or between a PN and the Center Stage Switch (CSS). This connection is comprised of a bi-directional optical fiber connection (optionally extended via a DS1 Converter Complex), with each end terminated on either an Expansion Interface (EI) or a Switch Node Interface (SNI). Fiber links provide the medium for circuit and packet connections between PNs and for communication between the SPE and Expansion PNs (EPNs) for the CSS.

The **long** sequence includes destructive tests and requires that the fiber link be busied out first. When a fiber is busied out, all calls over that fiber are dropped.

clear firmware-counters clears the firmware counters of specified SNI, SNC or DS1C circuit packs, or of an the entire PNC (A or B).

Parameters

link#	The number associated with a fiber link or fiber link pair (on duplicated PNCs). **List fiber-link** displays the location of endpoints for each fiber link.
a-pnc | b-pnc	On Critical Reliability systems (duplicated PNC) this identifier is used to distinguish between the two fibers of a duplicated fiber pair.

Examples

Simplex PNC:
test fiber-link 1 l schedule
test fiber-link 10 sh r 25 sch

Duplicated PNC:
test fiber-link 1 a-pnc schedule
test fiber-link 03 b-pnc sh r 3

Output

Port — On Critical Reliability systems (duplicated PNC) there are two fibers associated with every fiber link number. A-PNC and B-PNC distinguish one from the other.

The following display shows a typical result when **test fiber-link 1 b-pnc** is entered.

```
test fiber-link 1 b-pnc                                    SPE B

                                  TEST RESULTS

Port      Maintenance Name  Alt. Name Test No. Result  Error Code

1 B-PNC   FIBER-LK                    777      PASS
1 B-PNC   FIBER-LK                    759      PASS
1 B-PNC   FIBER-LK                    989      PASS
1 B-PNC   FIBER-LK                    237      PASS
1 B-PNC   FIBER-LK                    238      PASS


Command Successfully Completed
```

Test Hardware-Group

test hardware-group **[system | carrier UUC | cabinet UU | port-network PN# | pnc a-pnc | b-pnc | board UUCSS | spe] [print | schedule]**

This command runs a series of demand maintenance tests on all hardware in a specified group: a carrier, cabinet, port network, PNC (A or B), SPE, circuit pack or the entire system. The tests executed vary depending on the options chosen and types of hardware in the group. Some tests are run concurrently to speed execution, so test results for several maintenance objects may be intermixed.

All tests run by **test hardware-group** are non-destructive for both the long and short options. The tests run on a given maintenance object may not be the same as those run by individual demand test sequences (for example, **test board long**).

A hardware-group command running in the foreground can be aborted by pressing Cancel or by entering **cancel hardware-group** at another terminal. The cancel command must be used for a test running in the background. You can restart a canceled hardware-group test at the point it left off by entering **resume hardware-group**. Hardware group tests started with the all-ports or spe-interchange options can be resumed, but they will not always test every port that originally would have been tested.

Feature Interactions

Test hardware-group	Only one "test hardware-group" command can be active at any given time.
TTI	If the test hardware-group command is issued with the all-ports option while the TTI background task is active, some unadministered ports may not be tested. In addition, active alarms on line ports may be cleared by this task. The status tti command may be used to determine the state of the TTI background task.
Add Station	If the add station command is entered for an untranslated port at the same time as it is being tested by the test hardware-group command with the all-ports option, the request to add station will fail and the following message will be displayed: `Object in use; please try later`
Trunk Administration	If an attempt is made to add an unadministered trunk port to a trunk group at the same time as it is being tested because of the test hardware-group command with the all-ports option, the request will fail and the following message will be displayed: `Object in use; please try later`
Save Translation	If the test hardware-group command is issued with the all-ports option when a translation save operation is active, some unadministered ports may not be tested. All other hardware will be tested normally.
Hardware Alarms	When a hardware error is detected by the test hardware-group command the hardware goes through the standard escalation strategy. Alarms will be raised on hardware that manifest hard errors. This alarming strategy is the same, regardless of whether the ports are translated or not.
System Interaction	The performance of test hardware-group is affected by call processing traffic, administration activity, choice of the short or long option, whether the all-ports option was chosen, whether the spe-interchange option was chosen, and other demand maintenance activity.

Scheduled and Periodic maintenance	When a test hardware-group command is entered, all activity related to scheduled background maintenance, periodic background maintenance, and data audits is suspended for the duration of the execution of the test hardware-group command. When a test hardware-group command is canceled or when the test hardware-group command completes, all suspended periodic, scheduled, and data audits background maintenance activity will be restarted where it left off.
Demand Testing of SPE Components	When a test hardware-group command is entered with the SPE-interchange option, demand tests of SPE components may abort while the interchange is in progress.

Parameters

All maintenance objects included in the specified hardware group are tested, including all circuit packs and ports. When a cabinet or larger entity is specified, environmental MOs are tested (see **test environment**).

Examples

test hardware-group system
test hardware-group port-network 11
test hardware-group pnc a-pnc
test hardware-group board 01c07
test hardware-group spe

Form Input

When you enter the command, an input form is displayed upon which you can specify certain options.

Test sequence	Specify the short or long test sequence. The **long** sequence is more comprehensive and is not destructive.
Test Repetition	Specify **repeat** to enter a number of times that the entire test sequence is to be repeated. Specify **continuously** to cause the test sequence to be repeated until the command is canceled.
count	When the previous field is set to **repeat**, specify the number of repetitions here.

Auto-page?	Specifying **y** causes a whole new screen to be displayed automatically whenever the screen fills up with results. This option is incompatible with the background option. If you do not specify the auto-page option, once the screen fills with results, testing will stop until you press Page or Cancel. Specifying **print** on the command line automatically engages auto-page.
Background?	Specifying **y** causes the tests to run in the background, freeing up the terminal for other tasks. Error results are logged in the error log but not displayed on the screen. This option is incompatible with the auto-page and "continuously" options.
Failures?	Specifying **y** causes only failure results to be displayed on the screen.
All-ports?	Specifying **y** causes testing of all customer-translated line and trunk ports and, for the following circuit packs, untranslated ports as well:

Table 8-8. Circuit Packs with Hardware-Group Testing of Untranslated Ports

TN#	Description	TN#	Description
TN413	Digital Line [G3r V2]	TN753	Direct-Inward-Dial Trunk
TN417	Auxiliary Trunk [G3r V2]	TN754	Digital Line
TN429	DIOD Trunk [G3r V2]	TN754	Digital Line
TN436	DID Trunk [G3r V2]	TN760C	Tie Trunk
TN437	Tie Trunk [G3r V2]	TN762	Hybrid Line
TN438	Central Office Trunk [G3r V2]	TN762B	Data Line
TN439	Tie Trunk [G3r V2]	TN763C	Auxiliary Trunk
TN447	Central Office Trunk [G3r V2]	TN769	Analog Line with Message Waiting
TN458	Tie Trunk [G3r V2]	TN784	Digital Line
TN459	DID Trunk [G3r V2]	TN785	16 Port Analog Line
TN465	Central Office Trunk [G3r V2]	TN2135	Italian 16 Port Analog Line [G3r V2]
TN467	8 port Analog line [G3r V2]	TN2136	Digital Line [G3r V2]
TN468	16 port Analog line [G3r V2]	TN2138	Central Office Trunk [G3r V2]
TN479	16 port Analog line [G3r V2]	TN2139	Direct Inward Dialing Trunk [G3r V2]
TN497	Tie Trunk [G3r V2]	TN2140	Tie Trunk [G3r V2]
TN556	ISDN BRI Line	TN2144	Analog Line [G3r V2]
TN735	MET Line	TN2146	Direct Inward Dialing Trunk [G3r V2]
TN742	8 port Analog Line	TN2147	Central Office Trunk [G3r V2]
TN746	16 port Analog line	TN2149	Analog Line [G3r V2]
TN747B	Central Office Trunk	TN2180	16 port Analog line [G3r V2]

SPE-interchange? Specifying **y** causes the system to perform a planned SPE interchange so that both SPEs can be fully tested.

```
test hardware-group system                                Page 1 of 1


                TEST HARDWARE-GROUP SELECTIONS

     Select the desired options for the specified test.

                    Test sequence: short
                Test repetition: repeat_____  count: 1_


              OUTPUT OPTIONS:                HARDWARE OPTIONS:

               Auto-page? n                        All-ports? n
              Background? n                 SPE-interchange? n
                Failures? n
```

Output

When the test is run in the foreground, test results are displayed in the normal format. In addition, the message line displays a running count of the number of maintenance objects already tested, the total number included in the tests, percent completed and repetition count.

The following display shows a typical result when **test hardware-group system** is entered.

```
test hardware-group system

                                  TEST RESULTS

Port       Maintenance Name  Alt. Name  Test No.   Result  Error Code

01C07      ANL-BD                        51         PASS
01C07      ANL-BD                        52         PASS
01C0703    ANL-LINE          5444        35         PASS
01C0702    ANL-LINE          5447        35         PASS
01C0703    ANL-LINE          5444        48         PASS
01C0701    ANL-LINE          5401        35         FAIL    1000
01C0702    ANL-LINE          5447        48         PASS
01C0703    ANL-LINE          5444        36         PASS
01C0702    ANL-LINE          5447        36         PASS
01C0701    ANL-LINE          5401        48         FAIL    1000
01C0701    ANL-LINE          5401        36         PASS


Testing system, 68 of 342 (19%) MOs tested for repetition 1
```

Test Host-Adapter

test host-adapter [C] [short | long] [repeat # | clear] [schedule]

The test host-adapter command performs a series of tests on the host-adapter portion of the specified MSSNET circuit pack. This command will abort if any other MSS operation has already begun.

Failure of the host-adapter test may result in disabling access to the host-adapter by all system software except maintenance. Such a failure of the host-adapter also denies access to the related tape and disk until the host-adapter is fully in service.

The cabinet is always **1** and need not be entered. Carrier **a** or **b** must be specified only for systems with duplicated SPEs.

Test INADS-Link

test inads-link

The test inads-link command makes a call over the SYSAM-RMT (or RAP) port on the SYSAM circuit pack to verify the THE INTEGRITY of the INADS alarm notification process. The test will abort if an alarm report to INADS is pending or in progress, or if alarm origination is disabled on the maintenance system parameters screen. The test waits 2 minutes before executing to allow a remote technician to log off and free the SYSAM-RMT port. (A technician logged in at the SYSAM-LCL connection, a system port, or an EPN Maintenance connection need not log off).

When the call is answered by INADS, the system sends a test alarm message. INADS acknowledges receipt of the message and creates a trouble ticket. The trouble ticket is closed immediately and `INADS LINK TEST` is entered in the description field. If an alarm is raised while the test call is up, the system does not send an alarm report over the existing link. The normal retry mechanism is followed: an attempt to make a alarm report call to INADS takes place 7 minutes later.

The "Maintain Process Circuit Packs" field must be set to yes on the login permissions form to enable execution of **test inads-link**.

No alarms are raised by execution of this command, and attendant alarm and acknowledgment lamp states are not be changed. The test will not execute during periodic or scheduled maintenance runs.

Test ISDN-Testcall

test isdn-testcall group#/member# [minutes #] [schedule]

The test isdn-testcall command starts an outgoing ISDN-PRI test call using the asynchronous method.

Only one ISDN trunk in each port network can be tested at one time. The maximum number of asynchronous outgoing test calls That can be run simultaneously depends on the number of Maintenance/Test circuit packs in the system.

For more information, see Test #258 under ISDN-TRK in Chapter 9, "Maintenance Object Repair Procedures".

Parameters

group#/member#	Specify the trunk over which to originate the test call.
minutes #	Specify the duration of the test call in minutes from 1 to 120. The duration defaults to 8.4 or 9.6 seconds.

For more information see "Common Input Parameters" at the beginning of this chapter.

Examples

test isdn-testcall 78/2 minutes 10

Output

Result	PASS	The test call was successfully initiated.
	ABORT	Resources were not available (for example, a B-channel or Maintenance/Test circuit pack).
	FAIL	An outgoing test call could not be initiated.

Test Journal-Printer

test journal-printer pms-log | wakeup-log **[short | long] [repeat number| clear] [schedule]**

The test journal-printer command performs hardware diagnostics on the link between the switch and a specified journal printer link to either the PMS-log printer or the wakeup-log printer.

Parameters

One of the two journal printers must be specified:

pms-log	This specifies the link to the Property Management System printer, whose maintenance name is PMS-PRNT.
wakeup-log	This specifies the wakeup-log printer, whose maintenance name is JNL-PRNT.

Output

Maintenance Name	PMS-PRNT designates the PMS-log printer. JNL-PRNT designates the wakeup-log printer.

Background maintenance activity on a link can interfere with testing and recovery of a particular component of the link. For example, as part of a test, maintenance software may busy out a component of the link, causing the link to drop. The system may then perform frequent attempts to re-establish the link. This can delay recovery of the component, since it must be idle for certain tests to take place. Busying out the link will prevent the system from these attempts to set up the link. Remember that a busyout will tear down a link if it is not already down.

Test LED

test led	**[all | cabinet UU | port-network PN# | switch-node SN# | a-pnc | b-pnc]**
	[repeat #]

This command verifies that a specified cabinet, port network, PNC or switch node is recognized by the system. It is also useful for identifying a port network, cabinet, or PNC (A or B).

When **test led** is entered, the red, green and yellow circuit pack LEDs are turned on until all administered carriers in the specified group have been lit for 2 seconds. They are then turned off in the same order in which they came on. The cycle can be repeated a number of times with the **repeat** option. Once all of the repeat cycles are completed, all affected LEDs are restored to reflect their current status.

Test Link

test link link [short | long] [repeat | clear] [schedule]

This command verifies that the specified link is administered and performs a series of tests on the link.

Parameters

Port — Each link is identified by a number (1-16) assigned on the Communication-Interface Links form. **Display communication-interface links** shows the location and identification of each link.

Output

Port — The location of the port on a Packet Gateway circuit pack associated with the link being tested.

The following display shows a typical result when **test link 1 long** is entered.

```
test link 1 long                                              SPE B

                            TEST RESULTS

Port      Maintenance Name  Alt. Name Test No. Result   Error Code

01C2001   PGATE-PT          5464      610      ABORT       1000
01C2001   PGATE-PT          5464      611      ABORT       1000
01C2001   PGATE-PT          5464      599      ABORT       1005
01C2001   PGATE-PT          5464      613      PASS
01C2001   PGATE-PT          5464      614      ABORT       1
01C2001   PGATE-PT          5464      976      FAIL        2
01C2001   PGATE-PT          5464      977      FAIL


Command Successfully Completed
```

Test Maintenance

test maintenance [C] [short | long] [repeat # | clear] [schedule]

The test maintenance command performs hardware diagnostic tests on a the SYSAM (PPN) and EPN Maintenance circuit packs.

On the SYSAM, this command tests system maintenance, ACTIVE and STANDBY terminal ports, and the SYSAM refresh, dual port RAM, system reset and sanity timer functions. On the SYSAM, the long test sequence resets the circuit pack, terminating any local or remote SYSAM logins. To see if the last two tests pass, you must log in again. The Outpulse Relay Test and the Analog Loop Around Test are not run on the standby SYSAM in a duplicated SPE.

On EPN Maintenance circuit packs, the G3-MT interface, EI link, reset and sanity functions are tested. The long test resets the EPN Maintenance circuit pack, causing a local EPN Maintenance login to drop.

The cabinet number defaults to 1. Carrier **a** or **b** must be specified only for PPN cabinets with duplicated SPEs.

Output

The following display shows a typical result when **test maintenance a** is entered.

```
test maintenance

                      TEST RESULTS

Port    Maintenance Name  Alt. Name   Test No.    Result   Error Code

01A      SYSAM                         911        PASS
01A      SYSAM                         913        PASS
01A      SYSAM                         915        PASS


Command Successfully Completed
```

The following display shows a typical result when **test maintenance 2** is entered.

```
test maintenance 2

                                 TEST RESULTS

Port      Maintenance Name  Alt. Name Test No. Result  Error Code

02A       MAINT                       106      PASS
02A       MAINT                       229      PASS
02A       MAINT                       303      PASS
02A       MAINT                       854      PASS
02A       MAINT                       337      PASS

Command Successfully Completed
```

Test Mass-Storage

test mass-storage [C] [short | long] [repeat | clear] [schedule]

This command performs tests on each of the three components of the Mass Storage System (MSS): the host adapter circuit on the MSSNET circuit pack, the tape circuit pack and the disk circuit pack. Each of the three objects is tested using the same sequence used when individual components are tested separately.

This command will abort if any other mass-storage operation has already begun.

Failure of the host-adapter test may result in the disabling of periodic and scheduled testing of the failed host-adapter and the related tape and disk. Failure of a tape or disk test may result in the disabling of periodic and scheduled testing of the component.

The cabinet is always **1** and need not be entered. Carrier **a** or **b** must be specified only for systems with duplicated SPEs.

The following display shows a typical result when **test mass-storage a** is entered.

```
test mass-storage

                         TEST RESULTS

Port      Maintenance Name  Alt. Name Test No. Result  Error Code

01A       H-ADAPTR                    822      PASS
01A       H-ADAPTR                    823      PASS
01A       H-ADAPTR                    824      PASS
01A       H-ADAPTR                    825      PASS
01A       TAPE                        809      PASS
01A       TAPE                        812      PASS
01A       TAPE                        813      PASS
01A       TAPE                        814      PASS
01A       TAPE                        815      PASS
01A       DISK                        809      PASS
01A       DISK                        812      PASS
01A       DISK                        813      PASS
01A       DISK                        814      PASS
01A       DISK                        815      PASS

Command Successfully Completed
```

Test Memory

test memory CSS [short | long] [repeat # | clear] [schedule]

This command performs hardware diagnostic tests on any or all Memory circuit packs in the specified carrier. All tests in both sequences are non-destructive.

The short test takes about 2 minutes to complete. The long test on a single circuit pack takes about 2 1/2 minutes. The long test takes an additional 2 minutes on circuit pack 1 for the Checksum Test.

Parameters

CSS The cabinet is always 1 and need not be specified. Carrier a or b must be specified only for duplicated SPEs. You can specify one of the Memory circuit pack slots (1-4) on the PPN control carrier. If the slot is not specified, all memory circuit packs are tested.

Output

`NOT ASSIGNED` indicates that the specified slot is not administered.

Test Modem-Pool

test modem-pool group# [/member#] [short | long] [repeat #] [schedule]

This command performs hardware diagnostic tests on the ports in a specified modem pool.

Parameters

group#/member# Each modem pool member is identified by a group number (1-63) and a member number (1-32) assigned during administration. Specifying only the group tests all members of a group. The meaning of an individual member depends on what type of modem pool is present:

— Each member of a Combined Modem Pool consists of an external modem and data module connected to pair of ports: an analog port on a TN742 or TN746 Analog Line circuit pack and a digital port on a TN754 Digital Line circuit pack. In this case, the standard ANL-LINE and DIG-LINE test are run.

— Each member of an Integrated Pooled Modem group is a TN758 Pooled Modem circuit pack containing two conversion resources, or pairs of analog and digital ports. In this case the sequence of tests for MODEM-PT are run.

Output

The following display shows a typical result when **test modem-pool 1/1** is entered.

```
test modem-pool 1/1

                                TEST RESULTS

Port    Maintenance Name  Alt. Name   Test No.     Result   Error Code

01C1201      MODEM-PT                    98          PASS
01C1201      MODEM-PT                    99          PASS
01C1203      MODEM-PT                    98          PASS
01C1203      MODEM-PT                    99          PASS

Command Successfully Completed
```

Test MSSNET

test mssnet C [short | long][repeat |clear][schedule]

The test mssnet command runs a series of diagnostic tests on the MSSNET circuit pack. Tests are run on both maintenance objects located on the MSSNET circuit pack: host-adapter (H-ADAPTR) and switch control (SW-CTL).

Parameters

C	The cabinet is always 1 and need not be entered. The carrier, a or b, must be specified in a duplicated SPE system.
clear	The clear option does not provide a useful function for this command. MSSNET is used only as a command object to run tests of the MSSNET circuit pack. Failures of circuits on the MSSNET board cause alarms against H-ADAPTR and SW-CTL. Individual demand tests of those maintenance objects should be used to clear associated alarms.

Output

The following display shows a typical result when **test mssnet 1a** is entered.

```
test mssnet 1a                                                    SPE A

                                  TEST RESULTS

  Port     Maintenance Name  Alt. Name Test No. Result      Error Code

  01A       H-ADAPTR                    822      PASS
  01A       H-ADAPTR                    823      PASS
  01A       H-ADAPTR                    824      PASS
  01A       H-ADAPTR                    825      PASS
  01A       SW-CTL                      92       PASS


Command Successfully Completed
```

Test Packet-Interface

test packet-interface [CSS] [short | long] [repeat # |clear] [schedule]

This command performs hardware diagnostic tests on any or all of the packet interface circuit packs in a specified carrier. Tests performed include local memory checksum tests, loop-around tests, and checks of failure counters.

The Maintenance Loop-Around Test (#886) is included in the test sequences of *active* packet-interface circuit packs only. The Active-Standby Peer Link Test (#888) is included in the test sequences of the *standby* packet-interface circuit packs only.

If the packet-interface circuit pack is in the "out-of-service" or "uninstalled" states, no demand tests as well as scheduled, periodic and error tests will run. See also **reset packet-interface** and **status packet-interface**.

Parameters

CSS The cabinet is always 1 and need not be entered. The carrier, a or b, must be entered only for duplicated SPEs. Slot number ranges from 1 to 3, corresponding to the dedicated PKT-INTFC slots on the control carrier. If omitted, all Packet Interface circuit packs on the specified carrier are tested.

Test PKT

test pkt port-network PN# [short | long] [repeat # | clear] [schedule]

This command tests the packet bus on a specified port network. For more information see "Common Input Parameters" and "Common Output Fields" at the beginning of this chapter.

Test PMS-Link

test pms-link [short | long] [repeat # | clear] [schedule]

The test pms-link command tests the specified property management system link by checking to see if the link is accessible and then performing a reset on the link. Background maintenance activity on a link can interfere with maintenance activity on a particular component of the link. For example, maintenance software may busy out a link component, causing the link to drop. Frequent attempts by the system to re-establish the link can then delay the recovery of the component, since the component must be idle for certain tests to take place. Busying out the link will prevent the system from these attempts to set up the link. Remember that a busyout will tear down a link if it is not already down.

Test Port

test port UUCSSpp [short | long] [repeat # | clear] [schedule]

The test port command performs hardware diagnostic tests on an individual port circuit specified in the command line. In most cases, tests are performed on hardware connected to the port. For more information see "Common Input Parameters" and "Common Output Fields" at the beginning of this chapter.

Test PRI-Endpoint

test pri-endpoint extension [short | long] [repeat#] [schedule]

This command applies only to G3 V2 systems.

The test pri-endpoint command performs hardware diagnostic tests on all port circuits (B-channels) that are associated with the specified PRI endpoint.

Output

The following display shows a typical result when **test pri 22501 sh** is entered and B-channels of the endpoint are assigned to port circuits 1 through 3 of the circuit pack in cabinet 1, carrier C, slot 20.

```
test pri-endpoint 22501 short                          page 1 of 1

                            TEST RESULTS

Port      Maintenance Name  Alt. Name Test No. Result   Error Code

01C2001   PE-BCHL           22501       36     PASS
01C2001   PE-BCHL           22501       255    PASS
01C2001   PE-BCHL           22501       256    PASS
01C2001   PE-BCHL           22501       257    PASS
01C2002   PE-BCHL           22501       36     PASS
01C2002   PE-BCHL           22501       255    PASS
01C2002   PE-BCHL           22501       256    PASS
01C2002   PE-BCHL           22501       257    PASS
01C2003   PE-BCHL           22501       36     PASS
01C2003   PE-BCHL           22501       255    PASS
01C2003   PE-BCHL           22501       256    PASS
01C2003   PE-BCHL           22501       257    PASS


Command Successfully Completed
```

Test Processor

test processor [C] [short | long] [repeat # | clear] [schedule]

The test processor command performs hardware diagnostic tests on a specified processor circuit pack.

Test Signaling-Group

test signaling-group group#[short | long] [repeat# | clear][schedule]

The test signaling-group validates the administration of a signaling group and runs a series of diagnostic tests on it.

An ISDN-PRI signaling group is a set of B-channels whose signaling messages are carried together on a designated D-channel or set of D-channels.

Parameters

group# An administered number associated with each signaling group.

Test SPE-Standby

test spe-standby [short | long] [repeat # | clear][schedule]

This command is valid only on systems with duplicated SPE. The test spe-standby command performs hardware diagnostic tests on each component of the standby Switch Processing Element (SPE). This command is also used with the long option to remove a standby from recent interchange mode. The sequence begins with testing of the STBY-SPE maintenance object to determine the availability of the standby SPE. The following tests are run on STBY-SPE:

1. Standby SPE status query
2. Standby SPE handshake test
3. Standby SPE time of day comparison (standby in synch with active)
4. Standby SPE configuration matchup test

The last test is run only in the long sequence. After the above sequence, tests of each component on the standby SPE are run.

Testing the standby SPE does not affects the availability of the standby SPE for service only in that execution of the long sequence takes the standby out of recent interchange mode.

Output

The following display shows a typical result when **test spe-standby** is entered.

```
test spe-standby                                  Page   1   SPE B

 TEST RESULTS

Port      Maintenance Name  Alt. Name Test No. Result   Error Code

01A       STBY-SPE                    855      PASS
01A       STBY-SPE                    919      PASS
01A       STBY-SPE                    858      PASS
01A       DISK                        809      PASS
01A       DISK                        812      PASS
01A       DISK                        813      PASS
01A       DISK                        814      PASS
01A       DISK                        815      PASS
01A       TAPE                        809      PASS
01A       TAPE                        812      PASS
01A       TAPE                        813      PASS
01A       TAPE                        814      PASS
01A       TAPE                        815      PASS
01A       H-ADAPTR                    822      PASS
01A       H-ADAPTR                    823      PASS

press CANCEL to quit --  press NEXT PAGE to continue
```

```
test spe-standby                                    Page   2   SPE B

                           TEST RESULTS

Port      Maintenance Name  Alt. Name Test No. Result     Error Code

01A       H-ADAPTR                    824      PASS
01A       H-ADAPTR                    825      PASS
01A       PROCR                       896      PASS
01A       PROCR                       897      PASS
01A       PROCR                       899      PASS
01A       PROCR                       900      PASS
01A       SYSAM                       911      PASS
01A       SYSAM                       913      PASS
01A       SYSAM                       912      PASS
01A       SYSAM                       915      PASS
01A2      MEM-BD                      906      PASS
01A2      MEM-BD                      907      PASS
01A2      MEM-BD                      908      PASS
01A1      MEM-BD                      906      PASS
01A1      MEM-BD                      907      PASS

press CANCEL to quit --  press NEXT PAGE to continue
```

```
test spe-standby                                PAGE 3      SPE B

 TEST RESULTS

Port      Maintenance Name  Alt. Name Test No. Result     Error Code

01A1      MEM-BD                      908      PASS
01A       SW-CTL                      92       PASS
01A1      PKT-INT                     887      PASS
01A1      PKT-INT                     888      PASS


Command Successfully Completed
```

Test SP-Link

test sp-link [short | long][schedule]

The test sp-link command validates administration of the system printer link and runs a series of diagnostic tests on it.

The system printer link is used by the switch to send print jobs to an external printer. The link is created by administering the system printer extension and setting up a call to the system printer.

Output

The following display shows a typical result when **test sp-link** is entered.

```
test sp-link                                              SPE A

                                 TEST RESULTS

Port      Maintenance Name  Alt. Name Test No. Result    Error Code

          SYS-PRNT                    215      PASS
          SYS-PRNT                    213      PASS



Command Successfully Completed
```

Test Station

test station extension [short | long] [repeat # | clear] [schedule]

The test station command performs hardware diagnostic tests on an individual port circuit assigned to the extension specified on the command line. Tests are performed on hardware connected to the port.

Output

The following display shows a typical result when **test station 5423** is entered.

```
test station 5423

                                    TEST RESULTS

Port      Maintenance Name  Alt. Name   Test No.   Result   Error Code

02B0504   ANL-LINE           5423       35         PASS
02B0504   ANL-LINE           5423       48         PASS
02B0504   ANL-LINE           5423       36         PASS


Command Successfully Completed
```

Test Stored-Data

test stored-data [short | long] [repeat # | clear] [schedule]

The test stored-data command performs a set of consistency checks of the boot images and translation data on tape and disk. In particular, software vintage numbers and translation time stamps are compared.

The short test sequence includes only inter-device tests. These include a tape-to-tape, disk-to-disk and two tape-to-disk tests for SPE duplex systems with tape and disk devices on both carriers. The long test sequence includes up to four intra-device consistency checks, one for each device. Another check of the system boot source is included in the long sequence.

For SPE simplex systems, only one tape-to-disk inter-device test and two intra-device consistency checks along with the boot source check are run. The other tests simply do not appear in the short or long test sequences.

The lack of the optional disks does not affect which tests are run. For both SPE simplex systems and SPE duplex systems, aborts are returned for those tests which require a disk.

This command will abort if any other MSS operation has already begun.

If translations have been saved to disk since the last time the disk was backed up to tape (a normal situation during work sessions), tests executed by this command will fail.

Test Switch-Control

test switch-control [C] [short | long] [repeat # | clear] [schedule]

The test switch-control command performs hardware diagnostic tests of the PPN Archangel, or SW-CTL circuit, on a specified MSSNET circuit pack. The PPN Archangel is responsible for transmitting messages back and forth between the SPE and the port circuit packs. For the short test of the active PPN Archangel, a loop-around test and a Control Channel test are performed. For the short test of the standby PPN Archangel, only the loop-around test is performed.

The long test includes a reset. When applied to the active PPN Archangel, this momentarily prevents call origination from stations or trunks connected to ports in the PPN. It is non-destructive for existing calls.

Long

C	The cabinet is always **1** and need not be entered. Carrier **a** or **b** must be specified only for systems with duplicated SPEs.
long	This will execute a more comprehensive and longer version of the diagnostic tests. When applied to the active PPN Archangel, this momentarily prevents call origination from stations or trunks connected to ports in the PPN. It is non-destructive for existing calls.

Test Synchronization

test synchronization [short | long] [repeat # | clear] [schedule]

The test synchronization command checks the timing synchronization source and updates circuit packs with the correct synchronization parameters. The tone-clocks, DS1s, and EIs are sent down-link messages to place them in the correct synchronization configuration given the current on-line synchronization reference.

The synchronization subsystem provides error-free digital communication between the switch and other PBXs, COs, or customer premises equipment. The subsystem is made up of the TDM bus clock, DS1 trunk circuit packs, and maintenance and administration software resident in the SPE.

Parameters

long	Both long and short sequences run Test #417. If Stratum 3 synchronization is administered, an additional non-destructive test (#649) is run by the long sequence.

Test Sys-Link

test sys-link UUCSSpp [channel #] [current | faulted]
[short | long][repeat # | clear] [schedule]

The test sys-link command will validate the existence of the specified link and run diagnostic tests on the hardware path that comprises the system link. If the "current" or "faulted" option is specified, tests are run on all hardware objects that comprise the specified link. If "current" or "faulted" is not specified, only the end-to-end sys-link connection will be tested.

The hardware path that comprises a system link consists of up to 21 hardware components that affect the behavior of the link. The number of components of a given system link hardware path depends on the system configuration and type of system link. The following links are examples of system links: Expansion Archangel Links (EAL), Indirect Neighbor Links (INL), Processor Gate Control links (PGC), PRI signaling links (PRI), System Access Port links (SAP), X.25 adjunct links (X25).

Parameters

UUCSSpp	The location of the port associated with the system link.
channel number	The processor channel (1 to 128) associated with an X.25 adjunct link to be tested.
current	This specifies testing of the current hardware path of the system link.
faulted	This specifies testing of the hardware path of the system link as it was constituted when a fault last caused the link to go down. For more information see "Common Input Parameters" at the beginning of this chapter.

Examples

test sys-link 2e0201 current l schedule
test sys-link 2e0201 faulted r 10
test sys-link 1c1701 channel 3 r 10

Output

The following display shows a typical result when **test sys-link 1e0201 current** is entered.

```
test sys-link 1e0201 current                          Page   1   SPE A

                                  TEST RESULTS

  Port      Maintenance Name  Alt. Name Test No. Result      Error Code

  01E0201   SYS-LINK          LNL       985      PASS
  01A1      PKT-INT                     886      PASS
  01A1      PKT-INT                     887      PASS
  PN 01     PKT-BUS                     572      PASS
  PN 01     PKT-BUS                     573      PASS
  01E01     EXP-INTF                    237      PASS
  01E01     EXP-INTF                    238      PASS
  01E01     EXP-INTF                    240      PASS
  01E01     EXP-INTF                    241      PASS
  01E01     EXP-INTF                    589      PASS
  01E01     EXP-INTF                    316      PASS
  1 A-PNC   FIBER-LK                    777      PASS
  1 A-PNC   FIBER-LK                    759      PASS
  1 A-PNC   FIBER-LK                    237      PASS
  1 A-PNC   FIBER-LK                    238      PASS

               press CANCEL to quit -- press NEXT PAGE to continue
```

Test Tape

test tape [C] [short | long] [repeat # | clear] [schedule]

The test tape command performs a series of tests on the tape circuit pack and tape cartridge. The standard cartridge used for backups of the disk is compatible with this test. The tape cartridge is rewound and a specific portion of the tape is used for test reads and writes. Tapes used for core dumps have an incompatible file system and should not be used for this test.

The cabinet is always **1** and need not be entered. Carrier **a** or **b** must be specified only for systems with duplicated SPEs.

This command will abort if any other MSS operation has already begun.

Failure of the tape test may result in the tape being placed in an out-of-service state. In this state, access to the tape by all system software except maintenance is blocked.

When the host-adapter is taken out of service due to failures of its tests, or fails a reset and becomes uninstalled, the tape is also placed in the uninstalled state and all access by system software, maintenance tests and commands including reset are blocked from execution.

Tapes used for core dumps have an incompatible file systems and cannot be tested by this command.

Test TDM

test tdm port-network PN# [short | long] [repeat # | clear] [schedule]

The test tdm command performs hardware diagnostic tests on the time slots of the specified TDM bus. Both halves ("a" and "b") of the TDM bus are tested.

Test Tone-Clock

test tone-clock UUC [short | long] [repeat # | clear] [schedule]

The test tone/clock command performs hardware diagnostic tests on the three maintenance objects on a specified tone/clock circuit pack: TONE-BD, TONE-GEN, TDM-CLK.

Test Trunk

test trunk group# [/ member#] [short | long] [repeat # | clear] [schedule]

The test trunk command performs hardware diagnostic tests on an entire trunk group or an individual trunk group member, depending on the options entered.

Test TSC-Administered

test tsc-administered signaling-group# / tsc-index [repeat#] [schedule]

The test tsc-administered command runs diagnostic tests on any type of administered Temporary Signaling Connections (TSCs) on a signaling group. A Switched services request to run the TSC heartbeat test is also performed.

Upgrade Software

Simplex:

upgrade software to-version

[version-override] [save-translation | no-translation]

Duplex:

upgrade software to-version

[call-override] [no-interchange] [version-override]

[preserve-calls | no-calls] [save-translation | no-translation]

This command is a single user command; that only **status** commands may be executed while this command is running; all other commands will be blocked.

Simplex: In a simplex system this command will result in translation being saved to the primary device, followed by a reboot of the processor with loading of the new software and translation data, and any field updates from the primary MSS device. When completed, service is restored.

Duplex: In a duplicated SPE system, the upgrade software command will save translation, reboot the standby SPE with new software from its primary MSS device, load translations, apply any field updates, initiate an interchange of the SPE's, and begin providing service to the system. Normally the interchange of the SPEs will result in minimal service disruption. In cases where the new software load is incompatible with the existing load, the system may perform a service-disrupting reboot. See "Software Updates" in Chapter 6, "Additional Maintenance Procedures".

Parameters

to-version	This qualifier identifies the software version. This qualifier is checked against the data on the MSS device to verify that the correct software version is being loaded and that the software version is the same or newer that the version in memory.
no-interchange	This option is only available in duplicated systems and provides the technician the ability to reboot the standby processor with the software on the standby primary MSS device, apply any field-updates and yet have the standby SPE remain the standby. The duplex default is to interchange the processors, upon a successful boot of the standby SPE.
call-override	This option is only available in duplicated systems and allows the command to continue, even if the command will result in a reset level 2 of the processor. Normally, the command would print an error message if it was able to determine if the reset was necessary. This reset would cause all calls in the system to be dropped.
version-override	This option allows the command to continue if the version specified is older than the version in memory. This would normally result in the command aborting because the upgrade is not moving to a newer version of the software. If the version-override option is used and the version on the primary MSS device is older than the current version in memory then the save translation step will be skipped.
save-translation	This option will override the internal system and save translation. The switch will not save translation if the version in memory is newer than the version to be booted. With this option the translation will be saved regardless of the software version.
no-translation	This option will cause the system not to save translation. When the upgrade is from an older to a newer release, the system will save translation , even if the translation is incompatible between the two particular releases. There may be rare occasions when there may be this incompatibility and therefore this option will keep the translation from being saved on the new version.

preserve-calls — The system may automatically not preserve calls because of the compatibility index, which signals a potential memory mismatch across the processors. Compatibility index major numbers must be identical, and the minor must either be identical or greater going forward for the upgrade to automatically be call preserving. This option will override the software determination of call preservation, and force the memory from the active to be sent to standby processor in an attempt to preserve calls. This option should be used with care, because attempting to preserve calls when the internal memory layout is not compatible will result in processor escalation to an eventual reboot.

Examples

Duplex
upgrade software DG3v02.03.0.01.0
upgrade software DG3v02.03.0.01.0 no-interchange no-translation
upgrade software DG3v02.03.0.01.0 call-override version-override

Input

Due to the complexity of this command and the options available, the system will display the following screen and ask for input (ENTER or CANCEL) from the user to either proceed with the command or to cancel the request.

The following display shows a typical result when **upgrade software DGv01.02.1.13.0** is entered on a system with simplex SPE:

```
upgrade software DG3v01.02.1.13.0


 This upgrade software command will result in the following actions:

      From software version: DG3v01.02.1.13.0
        To software version: DG3v01.03.4.13.0

      Save CURRENT translation to MSS? yes



Press ENTER to continue or CANCEL to abort the command
```

The following display shows a typical result when **upgrade software DG3v01.02.1.13.0** is entered on a system with duplicated SPE.

```
upgrade software DG3v01.02.1.13.0


 This upgrade software command will result in the following actions:

      From software version: DG3v01.02.1.13.0
        To software version: DG3v01.03.4.13.0

      From compatibility index: 2.2
        To compatibility index: 2.2

      Save CURRENT translation to both active and standby MSS? yes

      Attempt to preserve calls across interchange? yes



Press ENTER to continue or CANCEL to abort the command
```

If the user presses ENTER, then the command will proceed. If, however, the user presses the CANCEL key then the command will be terminated.

Output

NOTE:
After initiating an **upgrade software**, do not touch the keyboard while waiting for the command to execute. Entering a carriage return will cause the progress and diagnostic messages to be lost. If the upgrade is successful, `Command successfully completed` is *not* displayed. Instead, the terminal is logged off the system and must be logged in again.

As the command progresses, results of each step are displayed with corresponding error codes. The entire process takes about 10 minutes. While the system is saving translations the following progress message is displayed and updated every 10 seconds:

```
Maximum remaining translation save time: 03 mins 20 secs
```

A success or failure result will be displayed. If the following message appears, system software is corrupted; follow normal escalation procedures.

```
Error encountered; can't complete request
```

Simplex SPE

The following display shows a typical result when **upgrade software** is executed on a system with a simplex SPE.

```
upgrade software

                              UPGRADE RESULTS


 Upgrade Step                                Results       Error Code

 disable maintenance                         PASS
 save translation                            PASS
 reboot processor                            PASS
```

Upgrade Step — Each step in the upgrade execution is displayed after it occurs:

1. disable maintenance: This step prevents periodic maintenance from interfering with the upgrade (similar to the **disable all** command).
2. save translation: Saves a copy of the current translation to the primary MSS device
3. reboot processor: Reboots the processor, causing a temporary service outage.
4. If the upgrade is successful, `Command successfully completed` is *not* displayed. Instead, the terminal is logged off the system and must be logged in again.

Results — This displays whether the step was successful or not. Possible values are: PASS, FAIL, or SKIPPED. SKIPPED only occurs for the save translation step when the current version is newer than the version on the primary MSS device, causing this step to be bypassed.

Error Code — If a step fails, this field displays a code indicating the reason according to Table 8-9:

Table 8-9. Upgrade Software Error Codes—Simplex SPE

Upgrade Step	Error Code	Description
Disable maintenance	6	Internal software error
Save translation	6	Internal software error
	7	Storage device currently in use
	8	Tape/disk access failure
	9	Internal translation data is corrupted
	10	Storage device has corrupted translation
	2000	The save was not completed in the allotted time
	6	Internal software error
Reboot processor	11	Could not load the boot image from the storage device
	12	Could not reboot the processor

Duplicated SPE

The following display shows a typical result when **upgrade software** is entered on a system with duplicated SPE.

```
upgrade software

                              UPGRADE RESULTS


 Upgrade Step                                Results       Error Code

 disable maintenance                         PASS
 save translation                            PASS
 busyout standby processor                   PASS
 translation load and reboot standby         PASS
 change memory shadow bounds                 PASS
 release standby processor                   PASS
 refresh standby memory                      PASS
 request an SPE interchange                  PASS
```

Upgrade Step — Each step in the upgrade execution is displayed after it occurs:

1. disable maintenance: This prevents periodic maintenance from interfering with the upgrade (similar to the **disable all** command).
2. save translation: save a copy of the current translation to the primary MSS device
3. busyout standby processor: This busies out the standby SPE, preventing spontaneous interchanges while the new software load is booted on the standby processor. This also turns off memory shadowing from active memory to the standby.
4. translation load and reboot standby: This causes the standby processor to load the boot image and translation on its primary device. The SPE remains standby, and starts running the Standby Maintenance Monitor (SMM).
5. change memory shadow bounds: This adjusts the range of memory transmitted from the active to the standby SPE to include only the information pertaining to active calls so as to preserve stable calls across the interchange.
6. release standby processor: This releases the standby SPE from busyout, allowing resumption of handshake and memory shadowing, with transfer of active call status to the standby.
7. refresh standby memory: The system waits for refresh to complete and reports the result.
8. request an SPE interchange: An interchange is executed into the standby SPE with the new load. If this step succeeds, the terminal is logged off. Otherwise, a failure code is returned.
9. If the upgrade is successful, `Command successfully completed` is *not* displayed. Instead, the terminal is logged off the system and must be logged in again.

Results — Result of the execution of the corresponding step: PASS, FAIL, or SKIPPED. SKIPPED occurs only for the save translation step when the current version is newer than the version on the primary MSS device.

Error Code — If a step fails, this field displays a code indicating the reason according to Table 8-10:

Table 8-10. Upgrade Software Error Codes—Duplicated SPE

Upgrade Step	Error Code	Description
disable maintenance	6	Internal software error
save translation	6	Internal software error
	7	Storage device currently in use
	8	Tape/disk access failure
	9	Internal translation data is corrupted
	10	Storage device has corrupted translation
	2000	The save was not completed in the allotted time
busyout standby processor	6	Internal software error
	2010	Standby is already busied out
translation load and reboot standby	1	Could not create software processes on the standby
	2	Not all processes on the standby were able to start
	3	Standby LMM detected hardware failures on processor complex
	4	Software update file on standby corrupted
	5	Translation on standby was not able to load correctly
	6	Internal software error
	2000	The load and reboot was not completed in the allotted time, or communication with the standby was corrupted
	2500	Internal software error with standby communication
change memory shadow bounds	6	Internal software error
	2500	Internal software error with standby communication

Continued on next page

Table 8-10. Upgrade Software Error Codes—Duplicated SPE — *Continued*

Upgrade Step	Error Code	Description
release standby processor	6	Internal software error
	2011	Standby processor was not busied out.
refresh standby memory	6	Internal software error
	2000	The refresh of the standby was not completed in the allotted time
request an SPE interchange	6	Internal software error
	2000	The load and reboot was not completed in the allotted time, or communication with the standby was corrupted
	2300	Communication failure with standby resulted in interchange failure
	2360	LMM attempt to interchange processors failed
	2500	Internal software error with standby communication

Feature Interactions

System Restarts

An upgrade causes in a system restart. For a complete description of effects, see "Software Updates" in Chapter 6, "Additional Maintenance Procedures".

Error and Alarm Log

Error and alarm logs are cleared.

Busy Outs

Maintenance objects that have been busied out by command are released during the reboot or interchange. If the upgrade command is canceled, all busyouts are preserved.

Multi-User Contention

While the upgrade command is executing, all other administration and maintenance commands except **status** reports are blocked.

Periodic and Scheduled Maintenance

Periodic and scheduled maintenance are suspended while the upgrade command is processing.

Command History Log

Unlike other commands, the upgrade software command is logged into the history log *before* it completes, prior to the save translation step. A record of the upgrade is saved on the new active SPE.

Alarm Origination

To prevent reporting of alarms generated by the upgrade, alarm origination is suspended during the execution of the command. After a successful interchange on a system with duplicated SPE, alarm origination remains suspended for approximately 5 minutes, or until the newly active SPE is ready to begin normal maintenance.

Enable All

All previously disabled maintenance objects are re-enabled following the upgrade. If the command is canceled, disables are preserved.

Maintenance Object Repair Procedures

9

WARNING:
Before working on the switch, be sure you are thoroughly familiar with the precautions listed at the beginning of Chapter 5, "Responding to Alarms and Errors".

This chapter contains information required for accurate interpretation of the Alarm Log, efficient maintenance testing, and speedy repair of alarmed MOs. The following details are provided for each MO, if applicable:

- Alarm levels
- Hardware errors associated with the MO
- The associated test that caused the errors
- Test sequences
- Test descriptions
- Error code descriptions
- Recommended maintenance procedures

The same tests run by the system during periodic, scheduled, and analysis testing are available to the technician by command. Depending upon results, these tests increment and decrement the error counters that generate alarms, as described in Chapter 1, "Maintenance Architecture". Thus, if an alarm was raised by a transient problem that is no longer active, the alarm can be resolved quickly by running the appropriate tests the correct number of times. Note that some test commands may trigger test sequences for more than one MO.

The MOs are arranged alphabetically under their names as they appear in the alarm log. Page numbers begin with the first letter of the MO.

XXX-BD is a set of common tests used by certain circuit packs that share the generic hardware that interfaces with the TDM Bus. The circuit packs included in the XXX-BD category are listed in the beginning of the XXX-BD (Common Port Circuit Pack) Maintenance documentation section.

Alarms: Order of Investigation

Table 9-1 provides a list of alarms against maintenance objects based on the relative importance of the alarms. The order proceeds all the way down each column before moving to the next column.

Depending on the failure type, this ordering may or may not be helpful with the analysis of multiple alarms. Failures of certain maintenance objects such as a Center Stage Switch component or a Tone-Clock circuit pack may cause OFF-BOARD alarms against other maintenance objects. For those failures, it may be necessary to analyze several alarms to locate the failed component.

Table 9-1. Recommended Order of Alarm Investigation

PROCR	MAJOR	TONE-PT	MAJOR	PROCR	MINOR
MEM-BD	MAJOR	DTMR-PT	MAJOR	MEM-BD	MINOR
SYSAM	MAJOR	GPTD-PT	MAJOR	SYSAM	MINOR
SW-CTL	MAJOR	PGATE-PT	MAJOR	PKT-BUS*	MINOR
PKT-BUS*	MAJOR	S-SYN-PT	MAJOR	PKT-INT	MINOR
PKT-INT	MAJOR	ANNOUNCE	MAJOR	H-ADAPTR	MINOR
TAPE	MAJOR	CLSFY-PT	MAJOR	EXP-INTF†	MINOR
EXP-INTF†	MAJOR	ASAI-ADJ	MAJOR	SNI-BD†	MINOR
SNI-BD†	MAJOR	MAINT	MAJOR	FIBER-LK†	MINOR
FIBER-LK†	MAJOR	CUST-ALM	MAJOR	SNI-PEER†	MINOR
SNI-PEER†	MAJOR	DC-POWER	MAJOR	SNC-BD†	MINOR
SNC-BD†	MAJOR	INADS	MAJOR	SNC-LINK†	MINOR
SNC-REF†	MAJOR	CABINET	MAJOR	SN-CONF†	MINOR
SN-CONF†	MAJOR	EMG-XFER	MAJOR	DS1C-BD†	MINOR
DS1C-BD†	MAJOR	CO-BD	MAJOR	DS1-FAC†	MINOR
DS1-FAC†	MAJOR	DID-BD	MAJOR	DISK	MINOR
EXP-PN†	MAJOR	ISDN-TRK	MAJOR	TAPE	MINOR

Continued on next page

Table 9-1. Recommended Order of Alarm Investigation — *Continued*

TDM-CLK	MAJOR	CO-DS1	MAJOR	STO-DATA	MINOR
TDM-BUS	MAJOR	DID-DS1	MAJOR	TDM-CLK	MINOR
RING-GEN	MAJOR	TIE-DS1	MAJOR	TDM-BUS	MINOR
CARR-POW	MAJOR	CO-TRK	MAJOR	PKT-BUS‡	MINOR
PKT-BUS‡	MAJOR	DID-TRK	MAJOR	SYNC	MINOR
SYNC	MAJOR	TIE-TRK	MAJOR	STRAT-3	MINOR
STRAT-3	MAJOR	ADM-CONN	MAJOR	POWER	MINOR
EXT-DEV	MAJOR	AUX-TRK	MAJOR	DC-POWER	MINOR
DUPINT	MAJOR	BRI-BD	MAJOR	CABINET	MINOR
DUP-CHL	MAJOR	BRI-DAT	MAJOR	DUPINT	MINOR
STBY-SPE	MAJOR	ABRI-PORT	MAJOR	DUP-CHL	MINOR
SPE-SELE	MAJOR	BRI-SET	MAJOR	STBY-SPE	MINOR
TONE-BD	MAJOR	ANL-NE-L	MAJOR	TTR-LEV	MINOR
TONE-BD	MINOR	AUX-TRK	MINOR	DS1C-BD†	WARNING
TONE-PT	MINOR	BRI-BD	MINOR	DS1-FAC†	WARNING
DTMR-PT	MINOR	MODEM-BD	MINOR	DISK	WARNING
GPTD-PT	MINOR	MODEM-PT	MINOR	TAPE	WARNING
DETR-BD	MINOR	DT-LN-BD	MINOR	STO-DATA	WARNING
PGATE-BD	MINOR	PDATA-BD	MINOR	TDM-CLK	WARNING
PGATE-PT	MINOR	PDATA-PT	MINOR	TDM-BUS	WARNING
S-SYN-BD	MINOR	M/T-BD	MINOR	SYNC	WARNING
S-SYN-PT	MINOR	M/T-ANA	MINOR	STBY-SPE	WARNING
ANN-BD	MINOR	M/T-DIG	MINOR	SPE-SELE	WARNING
ANN-PT	MINOR	M/T-PKT	MINOR	TONE-BD	WARNING
CLSFY-BD	MINOR	PDMODULE	MINOR	TONE-PT	WARNING
CLSFY-PT	MINOR	TDMODULE	MINOR	DTMR-PT	WARNING
ASAI-ADJ	MINOR	ANL-BD	MINOR	PKT-BUS‡	WARNING
MAINT	MINOR	ANL-LINE	MINOR	GPTD-PT	WARNING
CUST-ALM	MINOR	ANL-NE-L	MINOR	DETR-BD	WARNING

Continued on next page

Table 9-1. Recommended Order of Alarm Investigation — *Continued*

EXT-DEV	MINOR	ANL-16-L	MINOR	PGATE-BD	WARNING
JNL-PRNT	MINOR	DIG-BD	MINOR	PGATE-PT	WARNING
CDR-LNK	MINOR	DIG-LINE	MINOR	TIE-BD	WARNING
PMS-LNK	MINOR	HYB-BD	MINOR	TIE-TRK	WARNING
PMS-PRNT	MINOR	HYB-LINE	MINOR	CO-TRK	WARNING
PRI-CDR	MINOR	DAT-LINE	MINOR	DID-TRK	WARNING
SEC-CDR	MINOR	AUX-BD	MINOR	ADM-CONN	WARNING
SYS-PRNT	MINOR	OPS-LINE	MINOR	AUX-BD	WARNING
SYS-LINK	MINOR	MET-BD	MINOR	AUX-TRK	WARNING
DS1-BD	MINOR	MET-LINE	MINOR	MODEM-BD	WARNING
UDS1-BD	MINOR	SVC-SLOT	MINOR	DT-LN-BD	WARNING
ISDN-TRK	MINOR	MEM-BD	WARNING	PDATA-PT	WARNING
ISDN-LNK	MINOR	SYSAM	WARNING	S-SYN-BD	WARNING
ISDN-SGR	MINOR	SW-CTL	WARNING	CLSFY-PT	WARNING
CO-DS1	MINOR	PKT-BUS*	WARNING	ASAI-ADJ	WARNING
DID-DS1	MINOR	PKT-INT	WARNING	MIS	WARNING
TIE-DS1	MINOR	H-ADAPTR	WARNING	CUST-ALM	WARNING
CO-TRK	MINOR	EXP-INTF†	WARNING	JNL-PRNT	WARNING
DID-TRK	MINOR	SNI-BD†	WARNING	CDR-LNK	WARNING
TIE-BD	MINOR	FIBER-LK†	WARNING	PMS-LNK	WARNING
TIE-TRK	MINOR	SNI-PEER†	WARNING	PMS-PRNT	WARNING
ADM-CONN	MINOR			PRI-CDR	WARNING
SEC-CDR	WARNING	M/T-DIG	WARNING	HYB-LINE	WARNING
SYS-PRNT	WARNING	M/T-PKT	WARNING	OPS-LINE	WARNING
SYS-LINK	WARNING	PDMODULE	WARNING	MET-BD	WARNING
AC-POWER	WARNING	TDMODULE	WARNING	MET-LINE	WARNING
EMG-XFER	WARNING	CUST-ALM	WARNING		
DS1-BD	WARNING	BRI-BD	WARNING		
UDS1-BD	WARNING	BRI-PORT	WARNING		

Continued on next page

Table 9-1. Recommended Order of Alarm Investigation — *Continued*

ISDN-TRK	WARNING	BRI-SET	WARNING
ISDN-LNK	WARNING	ANL-BD	WARNING
ISDN-SGR	WARNING	ANL-LINE	WARNING
CO-DS1	WARNING	ANL-NE-L	WARNING
DID-DS1	WARNING	ANL-16-L	WARNING
TIE-DS1	WARNING	DIG-BD	WARNING
M/T-BD	WARNING	DIG-LINE	WARNING
M/T-ANA	WARNING	HYB-BD	WARNING

* If the PKT-BUS is located in the PPN. Such an error can affect service throughout the system.

† A failure of one or more Center Stage Switch (CSS) Maintenance Objects (EXP-INTF, SNI-BD, SNI-PEER, FIBER-LK, SNC-BD, SNC-REF, SN-CONF, DSIC-BD, and DS1-FAC) may cause alarms against other Center Stage Switch Maintenance Objects. All on-board CSS alarms should be investigated first. Then, all off-board alarms for CSS components should be investigated together to determine the source of the problem.

‡ If the PKT-BUS alarm is in and EPN. Such an error will affect service for endpoints on that port network.

Test Number Index

Table 9-2 shows each demand test available to the technician, the maintenance objects upon which the test is run, and the sequence, short and/or long, during which it is run.

Table 9-2. TEST #161 Loop Around Test

Test No.	Short/ Long	Maintenance Objects
3	S,L	CO-TRK
5	S,L	POWER
6	L	CO-TRK DID-TRK TIE-TRK AUX-TRK TIE-DS1 CO-DS1 DID-DS1

Continued on next page

Table 9-2. TEST #161 Loop Around Test — *Continued*

Test No.	Short/ Long	Maintenance Objects
		OPS-LINE ANL-LINE ANL-NE-LINE HYB-LINE MET-LINE ANL-16-LINE S-SYN-PT DAT-LINE ISDN-TRK
7	L	TIE-DS1 CO-DS1 DID-DS1 OPS-LINE ANL-16-LINE S-SYN-PT DAT-LINE ISDN-TRK
9	L	AUDIX-PT DIG-LINE PDMODULE TDMODULE M/T-ANL M/T-DIG
11	L	AUDIX-PT DIG-LINE
13	S	M/T-ANL M/T-DIG
	L	AUDIX-PT DIG-LINE PDMODULE TDMODULE M/T-ANL M/T-DIG
16	S,L	AUDIX-PT DIG-LINE
17	S,L	AUDIX-PT DIG-LINE PDMODULE TDMODULE
33	L	CO-TRK DID-TRK TIE-TRK AUX-TRK
35	S	DID-TRK ANL-LINE ANL-NE-LINE ANL-16-LINE
	L	DID-TRK ANL-LINE ANL-NE-LINE MET-LINE ANL-16-LINE
36	S,L	CO-TRK DID-TRK TIE-TRK AUX-TRK TIE-DS1 CO-DS1 DID-DS1 OPS-LINE ANL-LINE ANL-NE-LINE ANL-16-LINE DAT-LINE ISDN-TRK
40	S,L	TONE-PT
41	S,L	TONE-PT
42	S,L	DTMR-PT GPTD-PT CLSFY-PT
43	S,L	DTMR-PT GPTD-PT CLSFY-PT
46	S,L	TONE-BD
47	L	ANL-LINE ANL-NE-LINE

Continued on next page

Table 9-2. TEST #161 Loop Around Test — *Continued*

Test No.	Short/ Long	Maintenance Objects
48	S,L	ANL-LINE ANL-NE-LINE ANL-16-LINE
50	L	AUDIX-BD ANL-BD ANL-BD DIG-BD HYB-BD CO-BD DID-BD AUX-BD TIE-BD DETR-BD CLSFY-BD MODEM-BD MET-BD DS1-BD UDS1-BD ANN-BD ANL-BD S-SYN-BD DT-LN-BD BRI-BD NMI-BD M/T-BD
51	S,L	ANL-BD ANL-BD ANL-BD
52	S	AUDIX-BD ANL-BD ANL-BD DIG-BD HYB-BD CO-BD DID-BD AUX-BD TIE-BD DETR-BD CLSFY-BD TONE-BD MODEM-BD MET-BD ANL-BD S-SYN-BD DT-LN-BD PDATA-BD BRI-BD NMI-BD PGATE-BD M/T-BD
	L	AUDIX-BD ANL-BD ANL-BD DIG-BD HYB-BD CO-BD DID-BD AUX-BD TIE-BD DETR-BD CLSFY-BD TONE-BD MODEM-BD MET-BD DS1-BD UDS1-BD ANN-BD ANL-BD S-SYN-BD DT-LN-BD PDATA-BD BRI-BD NMI-BD PGATE-BD M/T-BD
53	L	TONE-BD
56	L	HYB-LINE MET-LINE
57	L	HYB-LINE MET-LINE
58	L	HYB-LINE
59	S,L	HYB-LINE
60	S,L	HYB-LINE MET-LINE
61	S,L	HYB-LINE MET-LINE
62	S,L	HYB-LINE MET-LINE

Continued on next page

Table 9-2. TEST #161 Loop Around Test — *Continued*

Test No.	Short/ Long	Maintenance Objects
73	S,L	TIE-TRK
74	S,L	TIE-TRK
78	S,L	AC-POWER
79	S,L	DC-POWER
90	L	TONE-PT
92	S,L	SW-CTL
93	L	SW-CTL
94	S,L	SW-CTL
96	L	MODEM-PT
97	L	MODEM-PT
98	S,L	MODEM-PT
99	S,L	MODEM-PT
106	S,L	MAINT
114	S,L	AUX-TRK
115	S,L	CUST-ALM
117	S,L	RING-GEN
118	S,L	RING-GEN
120	S,L	EXT-DEV
122	S,L	CABINET
124	S,L	EMG-XFER
127	S,L	CARR-POW
136	S,L	TIE-DS1
138	S,L	DS1-BD UDS1-BD
139	S,L	DS1-BD UDS1-BD
140	S,L	DS1-BD UDS1-BD
141	S,L	DS1-BD UDS1-BD
142	S,L	DS1-BD UDS1-BD
143	S,L	DS1-BD UDS1-BD

Continued on next page

Table 9-2. TEST #161 Loop Around Test — *Continued*

Test No.	Short/ Long	Maintenance Objects
144	S,L	DS1-BD UDS1-BD
145	S,L	DS1-BD UDS1-BD
146	S,L	DS1-BD UDS1-BD
148	S,L	TDM-CLK
149	S,L	TDM-CLK
150	S,L	TDM-CLK
151	S,L	TDM-CLK
161	L	ANL-16-LINE
163	L	S-SYN-PT
164	S,L	S-SYN-PT
165	S,L	S-SYN-PT
166	S,L	S-SYN-PT
167	S,L	S-SYN-PT
168	S,L	S-SYN-PT
169	S,L	S-SYN-PT
171	S,L	DAT-LINE
175	L	PDMODULE TDMODULE
205	L	ANN-PT
206	S,L	ANN-PT
208	L	ANN-BD
209	S,L	ANN-BD
210	S,L	ANN-BD
211	S,L	ANN-BD
212	S,L	ANN-BD
213	S	SYS-PRNT
	L	JRNL-LNK PMS-LINK CDR-LNK SYS-PRNT

Continued on next page

Table 9-2. TEST #161 Loop Around Test — *Continued*

Test No.	Short/ Long	Maintenance Objects
215	S	JRNL-LNK PMS-LINK CDR-LNK SYS-PRNT
	L	JRNL-LNK PMS-LINK CDR-LNK SYS-PRNT
220	S,L	ANL-BD ANL-BD
222	S,L	ANN-PT
228	L	MAINT
229	S,L	MAINT
237	S,L	EXP-INTF
238	S,L	EXP-INTF
240	S,L	EXP-INTF
241	S,L	EXP-INTF
242	L	EXP-INTF
244	S,L	EXP-INTF
255	S,L	ISDN-TRK
256	S,L	ISDN-TRK
257	S,L	ISDN-TRK
258	L	ISDN-TRK
270	S	BRI-PORT ABRI-PORT
	L	M/T-ANL M/T-DIG M/T-PKT BRI-PORT ABRI-PORT
294	S,L	TDM-BUS
296	S,L	TDM-BUS
297	S,L	TDM-BUS
303	S,L	MAINT
306	L	MAINT
312	S,L	OPS-LINE
314	S,L	CO-DS1
316	S,L	EXP-INTF
337	S,L	MAINT
417	S,L	SYNC

Continued on next page

Table 9-2. TEST #161 Loop Around Test — *Continued*

Test No.	Short/ Long	Maintenance Objects
421	L	TAPE-DATA
558	S,L	PDATA-PT
565	S,L	M/T-DIG
566	S,L	M/T-ANL M/T-DIG
567	S,L	M/T-PKT
572	S,L	PKT-BUS
573	L	PKT-BUS
574	S,L	TDM-CLK
589	S,L	EXP-INTF
595	L	PDATA-BD BRI-BD NMI-BD PGATE-BD
596	L	PDATA-BD BRI-BD PGATE-BD
597	L	PGATE-BD
598	S,L	PGATE-BD
599	L	PGATE-PT
600	S,L	PGATE-BD
601	S,L	PGATE-BD
602	S,L	PDATA-PT
603	S,L	PDATA-PT
610	L	PGATE-PT
611	L	PGATE-PT
613	S,L	PGATE-PT
614	S,L	PGATE-PT
617	L	BRI-PORT
618	L	BRI-PORT ABRI-PORT
619	L	BRI-PORT
620	S,L	BRI-PORT ABRI-PORT
621	S,L	BRI-PORT ABRI-PORT
622	S,L	BRI-PORT ABRI-PORT

Continued on next page

Table 9-2. TEST #161 Loop Around Test — *Continued*

Test No.	Short/ Long	Maintenance Objects
623	L	BRI-PORT ABRI-PORT
624	L	BRI-PORT ABRI-PORT
625	L	BRI-PORT ABRI-PORT
626	S,L	BRI-SET ASAI-ADJ
627	L	BRI-SET
628	S,L	BRI-SET ASAI-ADJ
629	S,L	BRI-SET
630	S,L	BRI-SET
636	S,L	ISDN-SGRP
637	S,L	ISDN-SGRP
639	S,L	ISDN-SGRP
643	S,L	ISDN-LNK
649	S,L	STRAT-3
755	S,L	SNI-BD
756	L	SNI-BD
757	L	SNI-BD
759	S,L	SNI-BD SNC-BD
760	L	SNC-BD
767	S,L	SNI-BD
777	S,L	SNI-BD SNC-BD
778	S,L	SNC-BD
779	S,L	SNC-BD
788	L	DS1C-BD
789	L	DS1C-BD
790	L	DS1C-BD
795	S,L	DS1C-BD
809	S,L	DISK TAPE
810	S,L	DISK TAPE

Continued on next page

Table 9-2. TEST #161 Loop Around Test — *Continued*

Test No.	Short/ Long	Maintenance Objects
811	L	DISK TAPE
812	S,L	DISK TAPE
813	S,L	DISK TAPE
814	S,L	DISK TAPE
815	S,L	DISK TAPE
820	L	H-ADAPTR
822	S,L	H-ADAPTR
823	S,L	H-ADAPTR
824	S,L	H-ADAPTR
825	S,L	H-ADAPTR
854	S,L	MAINT
855	S,L	STBY-SPE
858	S,L	STBY-SPE
865	L	DUPINT
866	L	DUPINT
867	L	DUPINT
868	L	DUPINT
869	L	DUP-CHL
870	L	DUPINT
871	L	DUP-CHL
872	L	DUP-CHL
873	L	DUP-CHL
874	S,L	DUP-CHL
875	S,L	DUP-CHL
876	S,L	DUP-CHL
884	L	PKT-INT
885	L	PKT-INT
887	S,L	PKT-INT

Continued on next page

Table 9-2. TEST #161 Loop Around Test — *Continued*

Test No.	Short/ Long	Maintenance Objects
888	S,L	PKT-INT
895	L	PROCR
896	S,L	PROCR
897	S,L	PROCR
899	S,L	PROCR
900	S,L	PROCR
902	L	MEM-BD
903	L	MEM-BD
906	S,L	MEM-BD
907	S,L	MEM-BD
908	S,L	MEM-BD
909	L	SYSAM
910	L	SYSAM
911	S,L	SYSAM
912	S,L	SYSAM
913	S,L	SYSAM
915	S,L	SYSAM
916	L	SYSAM
917	L	SYSAM
919	S,L	STBY-SPE
920	L	STBY-SPE
939	L	ISDN-LNK
949	S,L	DS1C-BD
963	S,L	M/T-ANL
976	S,L	PGATE-PT
977	L	PGATE-PT
979	S,L	DUPINT
980	S,L	DUP-CHL

Continued on next page

Table 9-2. TEST #161 Loop Around Test — *Continued*

Test No.	Short/ Long	Maintenance Objects
985	S,L	SYS-LINK
989	S,L	SNI-BD

Maintenance Object Repair Procedures
ABRI-PORT to AUX-TRK

A

ABRI-PORT (ASAI ISDN-BRI Port)

MO Name As It Appears In Alarm Log	Alarm Level	Initial System Technician Command To Run (a)	Full Name of MO
ABRI-PORT (b)	MAJ/MIN/WRN (b)	test port UUCSSpp l	ASAI ISDN-BRI Port

a. UU is the universal cabinet number (1 for PPN, 2 - 44 for EPNs). C is the carrier designation (A, B, C, D, or E). SS is the number of the slot in which the circuit pack resides (01 to 21). pp is the two digit port number (01, 02, ...).

b. The alarm level for ABRI ports may be administered using the **set options** command. The alarm level can be set independently for Off-Board and On-Board alarms to WARNING, MINOR, or MAJOR for all ABRI ports in the system.

Refer to BRI-PORT (ISDN-BRI Port) Maintenance documentation for repair procedures.

AC-POWER for AC-Powered Systems

MO Name As It Appears In Alarm Log	Alarm Level	Initial System Technician Command To Run (a)	Full Name of MO
AC-POWER	WARNING	test environment *UU*	AC Power

a. *UU* is the universal cabinet number (1 for PPN, 2 - 44 for EPNs).

DEFINITY Generic 3r systems support two different cabinet types: multicarrier and single carrier. Single carrier cabinets are used only for EPNs. Both cabinet types may be powered by either AC or DC external power source. Environmental maintenance differs according to cabinet type and external power supply. Refer to the following table to determine which maintenance object documentation to use for environmental maintenance.

Cabinet Type	Power Source	Environmental Maintenance Objects
Single carrier (EPN)	AC or DC	DC-POWER (all environmental maintenance)
Multicarrier	AC	AC-POWER for AC-powered systems (external power source) POWER for AC-powered systems (battery backup) CARR-POW (carrier port power supply) CABINET (temperature and fan sensors)
Multicarrier	DC	CARR-POW (carrier port power supply) CABINET (temperature and fan sensors)

The AC-POWER maintenance object represents external AC power provided to the cabinet from a wall outlet in a multicarrier cabinet system. AC power is supplied from the wall outlet to the Power Distribution Unit (PDU), and is then distributed to the various Carrier Port Power Units. The Battery Charger, if present, monitors AC power at fuse F5. Refer to the CARR-POW of this chapter for illustrations showing the location and functions of each fuse.

Nominal Power Holdover

AC-powered multicarrier cabinets can be equipped with three 48V batteries and a battery charger to provide backup power in case external power is interrupted. Battery backup is optional on AC-powered cabinets powered by an AT&T Uninterruptible Power Supply (UPS), and required on those that are not. Battery backup, or Nominal Power Holdover, is described in the POWER section of this chapter.

Hardware Error Log Entries and Test to Clear Values

AC Power Error Log Entries

Error Type	Aux Data	Associated Test	Alarm Level	On/Off Board	Test to Clear Value
0*	0	Any	Any	Any	test environment *UU* sh r 1
513	Any	AC Power Query Test (#78)	WARNING	OFF	test environment *UU* sh r 1

* Run the Short Test Sequence first. If all tests pass, run the Long Test Sequence. Refer to the appropriate test description and follow the recommended procedures.

System Technician-Demanded Tests: Descriptions and Error Codes

Always investigate tests in the order presented in the table below when inspecting errors in the system. By clearing error codes associated with the *AC Power Query Test*, for example, you may also clear errors generated from other tests in the testing sequence.

Order of Investigation	Short Test Sequence	LongTest Sequence	D/ND*
Battery & Battery Charger Query Test (#5) (a)	X	X	ND
AC Power Query Test (#78)	X	X	ND
Power Unit Query Test (carrier E) (#127) (b)	X	X	ND
Power Unit Query Test (carrier D) (#127) (b)	X	X	ND
Power Unit Query Test (carrier A) (#127) (b)	X	X	ND
Power Unit Query Test (carrier B) (#127) (b)	X	X	ND

Order of Investigation	Short Test Sequence	LongTest Sequence	D/ND*
Power Unit Query Test (carrier C) (#127) (b)	X	X	ND
Emergency Transfer Query Test (#124) (c)	X	X	ND
Cabinet Temperature Query Test (#122) (d)	X	X	ND
External Alarm Lead Query Test (#120) (e)	X	X	ND
Analog Ring Generator Initialization Test (#117) (f)	X	X	ND
Analog Ring Generator Query Test (#118) (f)	X	X	ND

* D = Destructive; ND = Nondestructive

Notes:

a. Refer to POWER (Battery & Battery Charger) section for a description of this test.

b. Refer to CARR-POW (Carrier Port Power Unit) section for a description of this test.

c. Refer to EMG-XFER (Emergency Transfer) section for a description of this test.

d. Refer to CABINET (Cabinet Sensors) section for a description of this test.

e. Refer to EXT-DEV (External Alarm Lead) section for a description of this test.

f. Refer to RING-GEN (Analog Ring Generator) section for a description of this test.

AC Power Query Test (#78)

This test queries the SYSAM in the PPN or the EPN Maintenance circuit pack in an EPN multicarrier cabinet system for the status of AC power to the cabinet. In a DC-powered system, this test should never fail.

Table 9-3. TEST #78 Power Query Test

Error Code	Test Result	Description/ Recommendation
1000	ABORT	System resources required to run this test are not available. 1. Retry the command at 1 minute intervals a maximum of 5 times. 2. If the test continues to abort, escalate the problem.
100 2000	ABORT	Response to the test request was not received within the allowable time period. 1. Retry the command at 1 minute intervals a maximum of 5 times. 2. If the test continues to ABORT with error code 2000, check for system powering problems with the A carrier (PPN or EPN). Look for and resolve all AC-POWER and CARR-POW alarms in a multicarrier cabinet system or DC-POWER alarms in a single carrier cabinet system. Then, repeat the test. 3. If the test continues to ABORT with a 2000 error code, check for and resolve all SYSAM errors in a PPN or MAINT (EPN Maintenance circuit pack) errors in an EPN. Then, repeat the test. 4. If the test continues to ABORT with a 2000 error code, then escalate the problem.
2029 2319 2320 2500	ABORT	Internal System Error 1. Retry the command at 1 minute intervals a maximum of 5 times. 2. If the test continues to abort, escalate the problem.

Continued on next page

Table 9-3. TEST #78 Power Query Test — *Continued*

Error Code	Test Result	Description/ Recommendation
1	FAIL	The cabinet is currently without AC power. 1. Check for AC at the wall outlet. a. If there is no AC power at the wall outlet, then the problem is not with the system itself. Power must be restored to the wall outlet. b. If there is AC power at the wall outlet, then there could be a problem with the Battery or Battery chargers. Resolve all alarms logged against POWER (Battery & Battery Charger), and rerun the test. If the test still fails, the fuse F5 may have blown. Replace fuse F5 (see the preceding figures), and rerun the test. If the test still fails, then the SYSAM or the EPN Maintenance circuit pack may be incorrectly reporting the problem. Resolve all alarms against these MOs, and rerun the test. There are failures that can occur on the SYSAM and EPN Maintenance circuit pack that *will not* be detected by their respective maintenance, but which will cause many, if not all, environment tests to fail. If more than two environment tests are failing, the suspect circuit pack, depending on the system configuration, should be replaced and the test rerun. If the test still fails, then escalate the problem.
100	FAIL	The cabinet is currently without AC power, and AC Power maintenance is in the middle of timing the NPH interval. 1. Follow the repair steps outlined above for error code 1.
	PASS	The SYSAM in the PPN or the EPN MAINT (Maintenance) circuit pack in an EPN has reported that the cabinet has AC power. If there is no AC power at the wall outlet, then look for and resolve all alarms against the appropriate MO listed.

AC-POWER for DC-Powered Systems

MO Name As It Appears In Alarm Log	Alarm Level	Initial System Technician Command To Run (a)	Full Name of MO
AC-POWER	WARNING	test environment *UU*	AC Power

a. *UU* is the universal cabinet number (1 for PPN, 2 - 44 for EPNs).

NOTE:
In a DC-powered multicarrier cabinet, the AC-POWER maintenance object exists, but serves no functional purpose. Because the system cannot determine the type of external power used, the AC-POWER test should always pass or abort. The maintenance strategy for power components in DC cabinets is described in the CARR-POW section of this chapter.

DEFINITY Generic 3r systems support two different cabinet types: multicarrier and single carrier. Single carrier cabinets are used only for EPNs. Both cabinet types may be powered by either AC or DC external power source. Environmental maintenance differs according to cabinet type and external power supply. Refer to the following table to determine which maintenance object documentation to use for environmental maintenance.

Cabinet Type	Power Source	Environmental Maintenance Objects
Single carrier (EPN)	AC or DC	DC-POWER (all environmental maintenance)
Multicarrier	AC	AC-POWER for AC-powered systems (external power source) POWER for AC-powered systems (battery backup) CARR-POW (carrier port power supply) CABINET (temperature and fan sensors)
Multicarrier	DC	CARR-POW (carrier port power supply) CABINET (temperature and fan sensors)

Hardware Error Log Entries and Test to Clear Values

AC Power Error Log Entries					
Error Type	**Aux Data**	**Associated Test**	**Alarm Level**	**On/Off Board**	**Test to Clear Value**
0*	0	Any	Any	Any	test environment UU sh r 1
513	Any	AC Power Query Test (#78)	WARNING	OFF	test environment UU sh r 1

* Run the Short Test Sequence first. If all tests pass, run the Long Test Sequence. Refer to the appropriate test description and follow the recommended procedures.

System Technician-Demanded Tests: Descriptions and Error Codes

Always investigate tests in the order presented in the table below when inspecting errors in the system. By clearing error codes associated with the *AC Power Query Test*, for example, you may also clear errors generated from other tests in the testing sequence.

Order of Investigation	Short Test Sequence	Long Test Sequence	D/ND*
Battery & Battery Charger Query Test (#5) (a)	X	X	ND
AC Power Query Test (#78)	X	X	ND
Power Unit Query Test (carrier E) (#127) (b)	X	X	ND
Power Unit Query Test (carrier D) (#127) (b)	X	X	ND
Power Unit Query Test (carrier A) (#127) (b)	X	X	ND
Power Unit Query Test (carrier B) (#127) (b)	X	X	ND
Power Unit Query Test (carrier C) (#127) (b)	X	X	ND
Emergency Transfer Query Test (#124) (c)	X	X	ND
Cabinet Temperature Query Test (#122) (d)	X	X	ND
External Alarm Lead Query Test (#120) (e)	X	X	ND
Analog Ring Generator Initialization Test (#117) (f)	X	X	ND
Analog Ring Generator Query Test (#118) (f)	X	X	ND

Notes:

a. Refer to POWER (Battery and Battery Charger) section for a description of this test.

b. Refer to CARR-POW (Carrier Port Power Unit) section for a description of this test.

c. Refer to EMG-XFER (Emergency Transfer) section for a description of this test.

d. Refer to CABINET (Cabinet Sensors) section for a description of this test.

e. Refer to EXT-DEV section for a description of this test.

f. Refer to RING-GEN (Analog Ring Generator) section for a description of this test.

AC Power Query Test (#78)

This test is not valid for DC-powered cabinet, and should always abort or pass.

Table 9-4. TEST #78 Power Query Test

Error Code	Test Result	Description/ Recommendation
1000	ABORT	System resources required to run this test are not available.
100 2000	ABORT	Response to the test request was not received within the allowable time period.
2029 2319 2320 2500	ABORT	Internal System Error 1. Retry the command at 1 minute intervals a maximum of 5 times. 2. If the test continues to abort, escalate the problem.
Any	FAIL	The SYSAM in a PPN or the EPN Maintenance circuit pack in an EPN is incorrectly reporting an AC power problem. If this test fails, there is a problem with the SYSAM OR EPN Maintenance circuit pack. Replace the suspect circuit pack and run the test again. If the test continues to fail, then follow normal escalation procedures.
	PASS	Since this test is invalid for DC-powered cabinets, this result simply indicates that the SYSAM or EPN Maintenance circuit pack is handling this test properly.

ADM-CONN (Administered Connection)

MO Name As It Appears In Alarm Log	Alarm Level	Initial System Technician Command To Run (a)	Full Name of MO
ADM-CONN	MAJOR	status administered-connection N	Administered Connection
ADM-CONN	MINOR	status administered-connection N	Administered Connection
ADM-CONN	WARNING	status administered-connection N	Administered Connection

a. where N is an appropriate Administered Connection number indicated in the PORT field of the Alarm or Error Log.

An administered connection provides an end-to-end connection between two access endpoints or data-modules on either the same or different switches. The connection is automatically established when it is administered and scheduled to be active.

An error is logged whenever an administered connection fails or cannot be established. Failures to establish generate an error whether they occur on an initial try a retry, a fast retry, a redial or an auto-restoration. A failed connection generates an error whether or not the connection is subsequently reestablished by fast retry, redial, or auto restoration.

An alarm is logged when an administered connection cannot be established either initially or after failure of a connection. Both the alarm level (none to major) and a failure threshold can be administered for each administered connection. An alarm is raised when either of the following occurs:

- The number of consecutive failed attempts to establish a connection reaches the administered threshold.
- Software determines that failure to establish a connection is due to a mistake in administration (see note *a* of the following table).

Hardware Error Log Entries and Test to Clear Values

Table 9-5. Administered Connection Error Log Entries

Error Type	Aux Data	Associated Test	Alarm Level	On/Off Board	Test to Clear Value
0 (h)	Any	None	Any	OFF	None
1 (a,b)	Any	None	Any	OFF	None
2 (c)	Any	None	Any	OFF	None
6 (d)	Any	None	Any	OFF	None
16 (a)	Any	None	Any	OFF	None
17 (e)	Any	None	Any	OFF	None
18 (f)	Any	None	Any	OFF	None
21 (d)	Any	None	Any	OFF	None
22 (a,g)	Any	None	Any	OFF	None
28 (a,b)	Any	None	Any	OFF	None
29 (h)	Any	None	Any	OFF	None
31 (d)	Any	None	Any	OFF	None
34 (i)	Any	None	Any	OFF	None
38 (j)	Any	None	Any	OFF	None
41 (j)	Any	None	Any	OFF	None
42 (i)	Any	None	Any	OFF	None
43 (n)	Any	None	Any	OFF	None
44 (i)	Any	None	Any	OFF	None
50 (a,k)	Any	None	Any	OFF	None
52 (a,l)	Any	None	Any	OFF	None
54 (l)	Any	None	Any	OFF	None
58 (i)	Any	None	Any	OFF	None
65 (a,m)	Any	None	Any	OFF	None
66 (a,m)	Any	None	Any	OFF	None
69 (a,m)	Any	None	Any	OFF	None
81 (n)	Any	None	Any	OFF	None

Continued on next page

Table 9-5. Administered Connection Error Log Entries — *Continued*

Error Type	Aux Data	Associated Test	Alarm Level	On/Off Board	Test to Clear Value
82 (o)	Any	None	Any	OFF	None
88 (a,p)	Any	None	Any	OFF	None
91 (n)	Any	None	Any	OFF	None
95 (n)	Any	None	Any	OFF	None
96 (n)	Any	None	Any	OFF	None
97 (n)	Any	None	Any	OFF	None
98 (n)	Any	None	Any	OFF	None
99 (n)	Any	None	Any	OFF	None
100 (n)	Any	None	Any	OFF	None
102 (f)	Any	None	Any	OFF	None
111 (n)	Any	None	Any	OFF	None
127 (d)	Any	None	Any	OFF	None

For all ADM-CONN errors:

All of the above errors have no specific test associated with them, and except for errors 17 and 127 are valid only for administered connections established over ISDN-PRI facilities. Error 127 is valid for administered connections established over non-ISDN facilities or between two endpoints on the same switch.

The following Aux Data apply to all errors:

1 Establishment of administered connection failed.

2 An active administered connection failed; the switch is attempting to reestablish via auto restoration.

3 Auto restoration failed.

4 An active administered connection failed; the switch is attempting to reestablish via fast retry.

5 Fast retry failed.

Notes:

a. These errors are typically associated with administration problems and are not expected to be of a temporary nature. Therefore, the administered connection is not retried and the failure is alarmed immediately. The alarm threshold specified by the customer is ignored.

b. The address of the destination endpoint is: an unassigned number (1), has an invalid number format (28), or is restricted from terminating calls due to Class of Restriction (''Access Denied''). Verify that the destination address is correct and that the destination endpoint is administered. The destination endpoint is not administered on the switch where this error is logged.

c. A request has been made to use a transit network or common carrier that cannot be accessed. Check the routing pattern used by this administered connection and verify that the inter-exchange carrier specified is correct.

d. The exact failure cause is unknown or has been mapped to one of these values. If this is not a temporary condition, try reversing the direction of the Administered Connection (i.e., originate the administered connection from the destination switch). This may yield another failure cause; if not, and if this condition persists, follow normal escalation procedures.

e. The destination endpoint is not available. Check the status of the destination endpoint at the far-end switch. *The status for the destination endpoint will not be available on the switch where this error is logged.* At the far end, use **status access-endpoint** or **status data-module** to see whether the endpoint is busy, out-of-service or otherwise unavailable.

f. This switch sent an ISDN message to another switch, which either did not respond (18) or did not respond within the allotted time (102). This could be due to link failure or congestion or outage at the other switch. If this is not a temporary condition, follow normal escalation procedures.

g. The address of the destination endpoint has changed. Verify that the new address is correct and change the administered connection accordingly. *The destination endpoint will not be administered on the switch where this error is logged.*

h. If this is not a temporary condition, follow normal escalation procedures.

i. These errors indicate that a resource (for example, a circuit or bearer capability) required by the administered connection is not presently available. If this is not a temporary condition, follow normal escalation procedures.

j. A network failure (38) or temporary failure (41) has occurred. Error Log entries for other maintenance objects (for example, DS1-BD or ISDN-LNK) may indicate a local problem. If not, and if this condition persists, follow normal escalation procedures.

k. A request to use a network service has been denied because the service has not been purchased. Check the routing pattern used by this administered connection and verify that the service type is correct. If the

service type appears correct, check with the customer or network provider or both to determine what services have been purchased by the customer.

l. These errors indicate that outgoing calls may be barred on the originating switch (52) or that incoming calls may be barred on the destination switch (54). To restore an AC failure, issue the **status administered connection** command for current AC state (observe the retry count.) If the AC state is ‘‘failed,’’ then verify and correct the AC Administration Form.

m. The requested bearer capability (65), channel type (66), or facility (69) is not implemented or is unknown to the network. Check the address of the destination endpoint and the routing pattern used by this Administered Connection, and verify that they are correct and available. If no problem is found, follow normal escalation procedures.

n. These errors indicate that an ISDN protocol error has occurred. If this is not a temporary condition, follow normal escalation procedures.

o. If this is not a temporary condition, follow normal escalation procedures.

p. The destination endpoint (or some intermediate facility) is not compatible with the originating endpoint. Check the BCC fields of the routing pattern used by this Administered Connection. Also, check whether or not the originating and destination endpoints are compatible (for example, the originating access endpoint is voice-grade data, and the destination access endpoint is 64k data).

ADX16D-B (16 Port AUDIX Circuit Pack)

MO Name As It Appears In Alarm Log	Alarm Level	Initial System Technician Command To Run (a)	Full Name of MO
ADX16D-B	MINOR	test board UUCSS sh	AUDIX Circuit Pack
ADX16D-B	WARNING	test board UUCSS sh	AUDIX Circuit Pack

a. *UU* is the universal cabinet number (1 for PPN, 2 - 44 for EPNs). *C* is the carrier designation (A, B, C, D, or E). *SS* is the number of the slot in which the circuit pack resides (01 to 21).

The ADX16D-B maintenance object represents a TN566/TN2169 Definity AUDIX circuit pack combination (sometimes called Embedded AUDIX) operating in 16 port mode digital (DP). For circuit-pack-level problems, see XXX-BD. Port-level maintenance is covered by ADX16D-P.

On G3rV1 systems, the TN566/TN2169 combination operating in control-link mode appear to the system as a TN746 Analog Line circuit pack with vintage greater than 50. The maintenance strategy for ports on the TN566 operating in control-link mode is described in ADXCL-PT.

DEFINITY AUDIX consists of two circuit packs that occupy 5 slots on a port carrier. The tests described in this manual apply only to switch-side maintenance which tests circuit pack components related to the TDM bus interface. The AUDIX system has an extensive maintenance strategy of its own that is described in *DEFINITY AUDIX System Maintenance*, 585-300-110.

ADXCL-BD (AUDIX Circuit Pack)

MO Name As It Appears In Alarm Log	Alarm Level	Initial System Technician Command To Run (a)	Full Name of MO
ADXCL-BD	MINOR	test board UUCSS sh	AUDIX Circuit Pack
ADXCL-BD	WARNING	test board UUCSS sh	AUDIX Circuit Pack

a. *UU* is the universal cabinet number (1 for PPN, 2 - 44 for EPNs). *C* is the carrier designation (A, B, C, D, or E). *SS* is the number of the slot in which the circuit pack resides (01 to 21).

The ADXCL-BD maintenance object represents a TN566/TN2169 Definity AUDIX circuit pack combination (sometimes called Embedded AUDIX) operating in control-link (CL) mode. For circuit-pack-level problems, see XXX-BD. Port-level maintenance is covered by ADXCL-PT.

On G3rV1 systems, the TN566/TN2169 combination operating in control-link mode appear to the system as a TN746 Analog Line circuit pack with vintage greater than 50. The maintenance strategy for ports on the TN566 operating in control-link mode is described in ADXCL-PT.

DEFINITY AUDIX consists of two circuit packs that occupy 5 slots on a port carrier. The tests described in this manual apply only to switch-side maintenance which tests circuit pack components related to the TDM bus interface. The AUDIX system has an extensive maintenance strategy of its own that is described in *DEFINITY AUDIX System Maintenance*, 585-300-110.

ADX16D-P (16-Port AUDIX Digital Port)

MO Name As It Appears In Alarm Log	Alarm Level	Initial System Technician Command To Run (a)	Full Name of MO
ADX16D-P	MINOR	test port UUCSSpp l	AUDIX Digital Port
ADX16D-P	WARNING	test port UUCSSpp sh	AUDIX Digital Port

a. *UU* is the universal cabinet number (1 for PPN, 2 -44 for EPNs). *C* is the carrier designation (A, B, C, D, or E). *SS* is the number of the slot in which the circuit pack resides (01 to 21). *pp* is the two digit port number (01, 02, ...).

CAUTION:
Never do any of the following without first shutting down AUDIX:

- Remove DEFINITY AUDIX circuit packs
- Recycle power to a carrier containing DEFINITY AUDIX circuit packs
- Remove power to a carrier or cabinet containing DEFINITY AUDIX circuit packs

CAUTION:
Doing so can damage AUDIX software. Follow instructions on the TN566/TN2169 faceplate (these also appear below).

The ADX16D-P maintenance object represents a port on a TN566/TN2169 DEFINITY AUDIX circuit pack (sometimes called Embedded AUDIX) operating in digital-port (DP) mode. (On G3r V1 systems this maintenance object appears as AUDIX-PT). For circuit-pack-level problems (ADX17D-B), see XXX-BD.

The maintenance strategy for ports on the TN566 operating in control-link mode is described in ADXCL-PT. On G3r V1 systems, TN566/TN2169 DEFINITY AUDIX circuit packs operating in control-link mode appear to the system as a TN746 Analog Line circuit pack with vintage greater than 50.

The tests described in this manual apply only to switch-side maintenance which tests circuit pack components related to the TDM bus interface. The AUDIX system has an extensive maintenance strategy of its own that is described in *DEFINITY AUDIX System Maintenance*, 585-300-110.

AUDIX is a full-service voice messaging system that allows switch users and outside callers to write, edit, send, and forward voice messages. It resides on a

combined pair of circuit packs: the TN566 Multifunction Board (MFB) and the TN2169 Alarm Board (ALB). Because of its size this combination occupies 5 slots, but only one slot is functional as far as the switch is concerned. The other 4 slots are seen by the switch as ‘‘AUDIX-reserved’’ slots (or ADX16-RES.)

In 16 Port DP mode the TN566 pack supports up to 16 voice ports, each with a primary information channel and a secondary information channel. Ports are administered in increments of two. When a call to a station with an AUDIX login is not answered, AUDIX answers the call using one of the available voice ports.

Unlike other AUDIX systems, DEFINITY AUDIX is not an adjunct.

Shutting Down DEFINITY AUDIX

Always shut down the AUDIX system before removing the TN566/TN2169 or removing or recycling power to it.

1. When AUDIX is shut down, the LCD display on the faceplate will display `E_SHUT`, `M_SHUT` or `386_DEAD`.
2. If one of the above is not displayed, press the `BOOT/SHUTDOWN` button on the AUDIX faceplate and wait for `M_SHUT` to be displayed steadily. (The display will flash while the disk spins down).
3. You can now safely remove (or recycle power to) the AUDIX circuit packs.
4. To restart AUDIX from the `SHUT` service state, press the `BOOT/SHUTDOWN` button.

Hardware Error Log Entries and Test to Clear Values

DEFINITY AUDIX Digital Port Error Log Entries					
Error Type	**Aux Data**	**Associated Test**	**Alarm Level**	**On/Off Board**	**Test to Clear Value**
0*	0	Any	Any	Any	test port UUCSSpp sh r 1
1(a)	40987	None	WARNING	OFF	
1(b)	1 to 20	None	WARNING	OFF	
15(c)	Any	None			
18(d)	0	busyout port UUCSSpp	WARNING	OFF	release port UUCSSpp
23(e)	0	None	WARNING	OFF	
130(f)		None	WARNING	ON	test port UUCSSpp sh
257(g)	40971	None			
513(h)	Any	None			
1537(i)	40968	None	WARNING	OFF	
1793		Voice & Ctrl. Local Loop TEST (#13)	MIN/ WRN†	ON	test port UUCSSpp l r 3
2049		NPE Crosstalk Test (#9)	MIN/ WRN†	ON	test port UUCSSpp l r 3
2305(j)	40967	None			
3840(k)	40965	None			
3840(l)	41029	None			

* Run the Short Test Sequence first. If all tests pass, run the Long Test Sequence. Refer to the appropriate test description and follow the recommended procedures.

† Minor alarms on this MO may be downgraded to Warning alarms based on the values used in the **set options** command.

Notes:

a. The user may experience a noisy port or link. This is an off-board problem that is detected by the port circuit. If this problem exists, replace the circuit pack (see precaution at the beginning of this section). Once the problem is resolved, the alarm is retired after a predetermined amount of time.

b. At least 15 off-board problems have been detected with the link to the voice port. When an error with the link is detected, an on-board counter is incremented.

   The user could experience a noisy port or link. This is an off-board problem that is detected by the port circuit. If this problem exists, replace the circuit pack (see precaution at the beginning of this section). Once the problem is resolved, the alarm is retired after a predetermined amount of time.

c. This is an internal type error that occurs when an audit request fails.

d. The port is busied-out by command. You can release the port via the **release port** UUCSSpp command.

e. The circuit pack is administered but not physically installed. The alarm will clear when a circuit pack is inserted.

f. The circuit pack has been removed or has been insane for more than 21 minutes. To clear the error, reinsert or replace the AUDIX circuit pack (see precaution at the beginning of this section).

g. Something is interfering with transmitting to the voice port. This is usually an on-board problem and can be ignored if no user complaints are received.

h. AUDIX is not available to the switch, possibly due to a busyout on the AUDIX system. Check out the AUDIX system referring *DEFINITY AUDIX System Maintenance*, 585-300-110. if necessary.

i. An in-line maintenance error has generated an off-board warning due to some problem with the link to the voice port. This can be ignored if no user complaints are received. If the problem persists, replace the circuit pack (see precaution at the beginning of this section). Once the problem is resolved, the alarm is retired after a certain period of time.

j. The link between the circuit pack and the voice port is successfully reset. No craft action is necessary.

k. No voice ports are connected to the DEFINITY AUDIX circuit pack. No maintenance action is required.

l. The message buffer in the circuit pack is full.

System Technician-Demanded Tests: Descriptions and Error Codes

Always investigate tests in the order presented in the table below when you are inspecting errors in the system. By clearing error codes associated with the *Voice and Control Channel Local Loop Around Test* for example, you may also clear errors generated from other tests in the testing sequence.

Order of Investigation	Short Test Sequence	LongTest Sequence	D/ND*
Voice and Control Channel Local Loop Around Test (#13)		X	ND
NPE Crosstalk Test (#9)		X	ND

* D = Destructive; ND = Nondestructive

NO-OP Tests

The maintenance strategy for DEFINITY AUDIX emulates the one for DIG-LINE. The tests listed below apply only to DIG-LINE and not to DEFINITY AUDIX. These are referred to as *NO-OP* tests, and they always return PASS.

- Electronic Power Feed Test (#11)
- Station Lamp Updates Test (#16)
- Station (Digital) Audits Test (#17)
- Digital Terminal Remote Loop Around Test (1201)

NPE Crosstalk Test (#9)

One or more Network Processing Elements (NPEs) reside on each circuit pack with a TDM Bus interface. The NPE controls port connectivity and gain, and it provides conferencing functions on a per-port basis. The NPE Crosstalk Test verifies that this port's NPE channel talks on the selected time slot and that it never crosses over to time slots reserved for other connections. If the NPE is not working correctly, one-way and noisy connections may be observed. This test is part of a port's Long Test Sequence, and it takes about 20 to 30 seconds to complete. Crosstalk testing is performed on both the primary information channel (voice) and on the secondary information channel (data) associated with each DEFINITY AUDIX port. If this test fails on either channel, the voice port is taken out-of-service.

Table 9-6. TEST #9 NPE Crosstalk Test

Error Code	Test Result	Description/ Recommendation
1	ABORT	During testing of the primary information channel, system resources may not have been available. Also, the port may have been busy during the test. 1. Check the port status. Use the **display port UUCSSpp** command to determine the voice port extension of the port. Use the **status station** command to determine the service state of the port. If the service state indicates that the port is in use, the port is unavailable for this test. You must wait until the port is idle. 2. If the port status is idle, retry the command at 1-minute intervals a maximum of 5 times. 3. If the test continues to abort, escalate the problem.
2	ABORT	System resources may not have been available, or the port may have been busy during the test. 1. Check if port is being used. Retry the command after 1 minute. 2. If the test continues to abort after 5 attempts, escalate the problem.

Continued on next page

Table 9-6. TEST #9 NPE Crosstalk Test — *Continued*

Error Code	Test Result	Description/ Recommendation
1000	ABORT	System resources required to run this test are not available. The port may be in use. Use the **display port UUCSSpp** command to determine the voice port extension of the port. Use the **status station** command to determine the service state of the port. If the service state indicates that the port is in use, the port is unavailable for certain tests. (Refer to the “Status” commands section in Chapter 8, "Maintenance Commands", for a full description of all possible states.) You must wait until the port is idle before retesting. 1. If the port status is idle, retry the command at 1-minute intervals a maximum of 5 times. 2. If the test continues to abort, escalate the problem.
1001	ABORT	System resources required to run this test are not available. 1. Retry the command at 1-minute intervals a maximum of 5 times. 2. If the test continues to abort, escalate the problem.
1002	ABORT	The system could not allocate time slots for the test. The system may be under heavy traffic conditions, or it may have time slots out-of-service due to TDM-BUS errors. Refer to TDM-BUS (TDM Bus) Maintenance to diagnose any active TDM-BUS errors. 1. If system has no TDM-BUS errors, and if it is not handling heavy traffic, repeat the test at 1-minute intervals a maximum of 5 times. 2. If the test continues to abort, escalate the problem.

Continued on next page

Table 9-6. TEST #9 NPE Crosstalk Test — *Continued*

Error Code	Test Result	Description/ Recommendation
1003	ABORT	The system could not allocate a tone receiver for the test. The system may be oversized for the number of Tone Detectors present, or some Tone Detectors may be out-of-service. 1. Look for TTR-LEV errors in the Error Log. If present, refer to TTR (TTR Level) Maintenance documentation. 2. Look for TONE-PT errors in the Error Log. If present, refer to TONE-PT (Tone Generator) Maintenance documentation. 3. If neither condition exists, retry the command at 1-minute intervals a maximum of 5 times. 4. If the test continues to abort, escalate the problem.
1004	ABORT	The port was put in use during the test. The test has been aborted. Use the **display port UUCSSpp** command to determine the voice port extension of the port. Use the **status station** command to determine the service state of the port. If the service state indicates that the port is in use, the port is unavailable for certain tests. (Refer to descriptions of the **status** commands in Chapter 8, "Maintenance Commands" for explanations of all possible states.) You must wait until the port is idle before retesting.
1020	ABORT	Test disabled via background testing. Use the **status station** command to determine when the voice port is available for testing.
2000	ABORT	Response to the test request was not received within the allowable time period. 1. Retry the command at 1-minute intervals a maximum of 5 times. 2. If the test continues to abort, escalate the problem.

Continued on next page

Table 9-6. TEST #9 NPE Crosstalk Test — *Continued*

Error Code	Test Result	Description/ Recommendation
1 2	FAIL	The Network Processing Element (NPE) of the tested port was found to be transmitting in error. This causes noisy and unreliable connections. Failure code 1 indicates that the Crosstalk test failed on the primary channel. Failure code 2 indicates that the Crosstalk test failed on the secondary channel. 1. Replace the circuit pack (see precaution at the beginning of this section).
	PASS	The port is using its allocated time slots correctly. 1. To be sure that this is not an intermittent problem, repeat this test up to a maximum of 10 times to make sure it continues to pass. 2. If complaints still exist, examine the connections.

Voice and Control Channel Local Loop Test (#13)

This test checks the information and control channels between the Switch Processing Element (SPE) and the DEFINITY AUDIX port circuit. The SPE sends a message to loop around both the information and control channels for the port. First, the primary information (voice) channel loop back test is run. The test is performed by sending a digital count from the Tone-Clock circuit pack on the primary information channel time slot and receiving the same digital count with a general purpose Tone Detector.

While the primary information channel is still looped around, the Control Channel Loop Around Test is performed. This test involves sending four different transparent patterns to the on-board microprocessor which loops them back. The looped back patterns are compared to the originals to check for data integrity.

The Loop Around Test for the secondary information (data) channel is then performed. This test is the same as the primary information channel loop around test.

Next, a Conference Test is implemented for the primary information channel. This test is the same as Conference Test #6.

Only one value (Pass, Fail, or Abort) is generated as a result of the four tests run. If any test fails or aborts, the sequence is stopped.

Table 9-7. TEST #13 Voice and Control Channel Local Loop Test

Error Code	Test Result	Description/ Recommendation
	ABORT	Internal System Error 1. Retry the command at 1-minute intervals a maximum of 5 times. 2. If the test continues to abort, escalate the problem.
1000	ABORT	System resources required to run this test are not available. The port may be in use. Use the **display port UUCSSpp** command to determine the voice port extension of the port. Use the **status station** command to determine the service state of the port. If the service state indicates that the port is in use, the port is unavailable for certain tests. (Refer to **status** commands in Chapter 8, "Maintenance Commands" for explanations of all possible states.) You must wait until the port is idle before retesting. 1. If the port status is idle, retry the command at 1-minute intervals a maximum of 5 times. 2. If the test continues to abort, escalate the problem.
1001	ABORT	System resources required to run this test are not available. 1. Retry the command at 1-minute intervals a maximum of 5 times. 2. If the test continues to abort, escalate the problem.
1002	ABORT	The system could not allocate time slots for the test. The system may be under heavy traffic conditions, or it may have time slots that are out-of-service due to TDM-BUS errors. Refer to TDM-BUS (TDM Bus) Maintenance to diagnose any active TDM-BUS errors. 1. If the system has no TDM-BUS errors, and if it is not handling heavy traffic, repeat the test at 1-minute intervals a maximum of 5 times. 2. If the test continues to abort, escalate the problem.

Continued on next page

Table 9-7. TEST #13 Voice and Control Channel Local Loop Test — *Continued*

Error Code	Test Result	Description/ Recommendation
1003	ABORT	The system could not allocate a tone receiver for the test. The system may be oversized for the number of Tone Detectors present, or some Tone Detectors may be out-of-service. 1. Look for TTR-LEV errors in the Error Log. If present, refer to TTR-LEV (TTR Level) Maintenance documentation. 2. Look for TONE-PT errors in the Error Log. If present, refer to TONE-PT (Tone Generator) Maintenance documentation. 3. If neither condition exists, retry the command at 1-minute intervals a maximum of 5 times. 4. If the test continues to abort, escalate the problem.
1004	ABORT	The port was put in use during the test. The test has been aborted. Use the **display port UUCSSpp** to determine the voice port extension of the port. Use the **status station** command to determine the service state of the port. If the service state indicates that the port is in use, the port is unavailable for certain tests. (Refer to the “Status” commands section in Chapter 8, "Maintenance Commands", for a full description of all possible states.) You must wait until the port is idle before retesting. 1. Retry the command at 1-minute intervals a maximum of 5 times. 2. If the test continues to abort, and if the port is not in use, escalate the problem.
2000	ABORT	Response to the test request was not received within the allowable time period. 1. Retry the command at 1-minute intervals a maximum of 5 times. 2. If the test continues to abort, escalate the problem.

Continued on next page

Table 9-7. TEST #13 Voice and Control Channel Local Loop Test — *Continued*

Error Code	Test Result	Description/ Recommendation
2100	ABORT	Could not allocate the necessary system resources to run this test. 1. Rerun the test at 1-minute intervals a maximum of 5 times. 2. If the test continues to abort, escalate the problem.
7	FAIL	Conference Test failed on the primary channel. In some cases, users may not notice a disruption in service. In extreme cases, the conferencing feature may not work at all.
14	FAIL	The primary voice channel is not transmitting properly. User impact may range from no noticeable effect to loss of use of this port.
15	FAIL	The control channel between the processor and DEFINITY AUDIX circuit pack is not transmitting properly. User impact may range from no noticeable effect to loss of use of this port. This failure could also be disruptive to other users.
16	FAIL	The secondary voice channel is not transmitting properly. User impact may range from no noticeable effect to loss of use of this port.

Continued on next page

Table 9-7. TEST #13 Voice and Control Channel Local Loop Test — *Continued*

Error Code	Test Result	Description/ Recommendation
None	FAIL	The test failed for reasons external to the DEFINITY AUDIX circuit pack. 1. Run circuit pack tests to check the Tone Generator circuit pack and the Tone Detector circuit pack by using the **test board UUCSS s** command. 2. Resolve any problems that are detected on the Tone Generator circuit pack or Tone Detector circuit pack. 3. If the Tone Generator and Tone Detector circuit packs are functioning properly, and if the test still fails, replace the DEFINITY AUDIX circuit pack (see precaution at the beginning of this section).
	PASS	Voice and Control Channel Local Loop test passed. All channels are transmitting properly. 1. To be sure that this is not an intermittent problem, repeat this test up to 10 times and see if it continues to pass. 2. If complaints still exist, examine the connections.

ADXCL-PT (AUDIX Analog Line/Control Link)

MO Name As It Appears In Alarm Log	Alarm Level	Initial System Technician Command To Run (a)	Full Name of MO
ADXCL-PT	MINOR	test port UUCSSpp l	AUDIX Analog Line/ Control Link
ADXCL-PT	WARNING	test port UUCSSpp sh	AUDIX Analog Line/ Control Link

a. *UU* is the universal cabinet number (1 for PPN, 2 - 44 for EPNs). *C* is the carrier designation (A, B, C, D, or E). *SS* is the number of the slot in which the circuit pack resides (01 to 21). *pp* is the two digit port number (01, 02, ...).

CAUTION:
Never do any of the following without first shutting down AUDIX:

- *remove DEFINITY AUDIX circuit packs*
- *recycle power to a carrier containing DEFINITY AUDIX circuit packs*
- *remove power to a carrier or cabinet containing DEFINITY AUDIX circuit packs*

CAUTION:
Doing so can damage AUDIX software. Follow instructions on the TN566/TN2169 faceplate (these also appear below).

The ADXCL-PT maintenance object represents a port on a TN566/TN2169 DEFINITY AUDIX circuit pack (sometimes called Embedded AUDIX) that is operating in control-link (CL) mode. On G3r V1 systems, a TN566/TN2169 of vintage *n* operating in control-link mode appears to the switch as a TN746 Analog Line circuit pack with vintage "50 + *n*." For circuit-pack-level problems (ADXCL-BD or ANL-16-BD), see XXX-BD. For port-level problems with DEFINITY AUDIX operating in digital-port mode, see ADXDP-PT.

The tests described in this manual apply only to switch-side maintenance which tests circuit pack components related to the TDM bus interface. The AUDIX system has an extensive maintenance strategy of its own that is described in *DEFINITY AUDIX System Maintenance*, 585-300-110.

AUDIX is a full-service voice messaging system that allows switch users and outside callers to write, edit, send, and forward voice messages. It resides on a

combined pair of circuit packs: the TN566 Multifunction Board (MFB) and the TN2169 Alarm Board (ALB). Because of its size this combination occupies 5 slots, but only one slot is functional as far as the switch is concerned. The other 4 slots are seen by the switch as ‘‘AUDIX-reserved’’ slots (or ADXCL-RS.)

In CL mode the TN566 pack supports up to 16 voice ports. When a call to a station with an AUDIX login is not answered, AUDIX answers the call using one of the available voice ports.

Unlike other AUDIX systems, DEFINITY AUDIX is not an adjunct.

Shutting Down DEFINITY AUDIX

Always shut down the AUDIX system before removing the TN566/TN2169 or removing or recycling power to it.

1. When AUDIX is shut down, the LCD display on the faceplate will display `E_SHUT`, `M_SHUT` or `386_DEAD`.
2. If one of the above is not displayed, press the `BOOT/SHUTDOWN` button on the AUDIX faceplate and wait for `M_SHUT` to be displayed steadily. (The display will flash while the disk spins down).
3. You can now safely remove (or recycle power to) the AUDIX circuit packs.
4. To restart AUDIX from the `SHUT` service state, press the `BOOT/SHUTDOWN` button.

Hardware Error Log Entries and Test to Clear Values

DEFINITY AUDIX Analog Line/Control Link Error Log Entries

Error Type	Aux Data	Associated Test	Alarm Level	On/Off Board	Test to Clear Value
0*	0	Any	Any	Any	test port UUCSSpp sh r 1
1(a)	40977	none			
18	0	busyout station *extension*>	WRN	ON	release station *extension*
23(b)	0	none	WRN	OFF	
130(c)		None	WRN	ON	test port UUCSSpp sh
257(d)	40973	none			
513(e)	Any	None			
1025(f)		Loop Around Test (#161)	MIN/ WRN†	ON	test port *UUCSSpp* l r 2
1281		Conference Test (#7)	MIN/ WRN†	ON	test port *UUCSSpp* l r 2
1537		NPE Crosstalk Test (#6)	MIN/ WRN†	ON	test port *UUCSSpp* l r 2

* Run the Short Test Sequence first. If all tests pass, run the Long Test Sequence. Refer to the appropriate test description and follow the recommended procedures.

† Minor alarms on this MO may be downgraded to Warning alarms based on the values used in the **set options** command.

Notes:

a. This is an in-line error and can only be resolved over time. This indicates that no terminal equipment was present when ringing was attempted. Execute the short **test port** UUCSSpp command.

b. The circuit pack has been logically administered but not physically installed. The alarm will be cleared when the circuit pack is installed.

c. The circuit pack has been removed or has been insane for more than 11 minutes. To clear the error, reinsert or replace the circuit pack.

d. This is an in-line error and can only be resolved over time. This error indicates that ringing voltage is absent. If only one Analog circuit pack in the system has this problem, then replace the circuit pack. If only Analog circuit packs on a particular carrier have this error, then the ringing

generator may not be connected to this carrier. If Analog circuit packs on many carriers have this error, then it is probably a problem with the ringing generator.

e. AUDIX is not available to the switch. Check the AUDIX system, referring to *DEFINITY AUDIX System Maintenance*, 585-300-110 when necessary.

f. The TDM bus is out of service. See the TDM-BUS section.

System Technician-Demanded Tests: Descriptions and Error Codes

Always investigate tests in the order presented in the table below when you are inspecting errors in the system. By clearing error codes associated with the *Loop Around Test #161* for example, you may also clear errors generated from other tests in the testing sequence.

Order of Investigation	Short Test Sequence	LongTest Sequence	D/ND*
Loop Around Test (#161)		X	ND
Conference Test (#7)		X	ND
NPE Crosstalk Test (#6)		X	ND

* D = Destructive; ND = Nondestructive

NO-OP Tests

The maintenance strategy for DEFINITY AUDIX emulates the one for ANL-16-L. The tests listed below apply only to ANL-16-L and not to DEFINITY AUDIX. These are referred to as *NO-OP* tests, and they always return PASS.

- Battery Feed Test (#35)
- Audits and Updates Test (#36)
- Station Present Test (#48)

Tests 36 and 48 ABORT when AUDIX is not running.

NPE Crosstalk Test (#6)

One or more Network Processing Elements (NPEs) reside on each circuit pack with a TDM Bus interface. The NPE controls port connectivity and gain, and provides conferencing functions on a per-port basis. The NPE Crosstalk Test verifies that this port's NPE channel talks on the selected time slot and never crosses over to time slots reserved for other connections. If the NPE is not working correctly, one-way and noisy connections may be observed. This test is part of the long test sequence and takes about 25 seconds to complete.

Table 9-8. TEST #6 NPE Crosstalk Test

Error Code	Test Result	Description/ Recommendation
	ABORT	Could not allocate the necessary system resources to run this test. 1. Retry the command at 1-minute intervals a maximum of 5 times. 2. If the test continues to abort, escalate the problem.
1000	ABORT	System resources required to run this test are not available. The port may be busy with a valid call. Use the **display port UUCSSpp** command to determine the station extension. Use the **status station** command to determine the service state of the port. If the service state indicates that the port is in use, the port is unavailable for certain tests. (Refer to the "Status" commands section in Chapter 8, "Maintenance Commands", for a full description of all possible states.) You must wait until the port is idle before retesting. 1. If the port status is idle, retry the command at 1-minute intervals a maximum of 5 times. 2. If the test continues to abort, escalate the problem.
1001	ABORT	Could not allocate the necessary system resources to run this test. 1. Retry the command at 1-minute intervals a maximum of 5 times. 2. If the test continues to abort, escalate the problem.

Continued on next page

Table 9-8. TEST #6 NPE Crosstalk Test — *Continued*

Error Code	Test Result	Description/ Recommendation
1002	ABORT	The system could not allocate time slots for the test. The system may be under heavy traffic conditions or it may have time slots out-of-service due to TDM-BUS errors. Refer to TDM-BUS Maintenance documentation to diagnose any active TDM-BUS errors. 1. If system has no TDM-BUS errors and is not handling heavy traffic, repeat test at 1-minute intervals a maximum of 5 times. 2. If the test continues to abort, escalate the problem.
1003	ABORT	The system could not allocate a tone receiver for the test. The system may be oversized for the number of Tone Detectors present or some Tone Detectors may be out-of-service. 1. Look for TTR-LEV errors in the Error Log. If present, refer to TTR-LEV (TTR Level) Maintenance documentation. 2. Look for TONE-PT errors in the Error Log. If present, refer to TONE-PT (Tone Generator) Maintenance documentation. 3. If neither condition exists, retry the test at 1-minute intervals a maximum of 5 times. 4. If the test continues to abort, escalate the problem.
1004	ABORT	The port was seized by a valid call during the test. The test has been aborted. Use the **display port UUCSSpp** command to determine the station extension. Use the **status station** command to determine the service state of the port. If the service state indicates that the port is in use, the port is unavailable for certain tests. (Refer to the “Status” commands section in Chapter 8, "Maintenance Commands", for a full description of all possible states.) You must wait until the port is idle before retesting. 1. Retry the command at 1-minute intervals a maximum of 5 times. 2. If the test continues to abort and the port is not in use, escalate the problem.

Continued on next page

Table 9-8. TEST #6 NPE Crosstalk Test — *Continued*

Error Code	Test Result	Description/ Recommendation
1005	ABORT	This condition indicates that the test is not applicable when the analog port is used in a combined modem pool. This error can be ignored.
1018	ABORT	Test disabled via administration. 1. To enable the test for the particular analog station being tested, enter the **change station <extension>** command and change the "Test?" field on the Station Form from "n" to "y."
2000	ABORT	Response to the test request was not received within the allowable time period.
2012	ABORT	System could not respond to this request.
2100	ABORT	Could not allocate the necessary system resources to run this test. 1. Retry the command at 1-minute intervals a maximum of 5 times. 2. If the test continues to abort, escalate the problem.
Any	FAIL	The NPE of the tested port was found to be transmitting in error. This causes noisy and unreliable connections. 1. Replace the circuit pack.
	PASS	The port is correctly using its allocated time slots. User-reported troubles on this port should be investigated by using other port tests, by examining station wiring, or by examining the station.

Conference Circuit Test (#7)

One or more NPEs reside on each circuit pack with a TDM Bus interface. The NPE controls port connectivity and gain, and provides conferencing functions on a per-port basis. The Conference Circuit Test verifies that the NPE channel for the port being tested can correctly perform the conferencing function. The NPE is instructed to listen to several different tones and conference the tones together. The resulting signal is then measured by a Tone Detector port. If the level of the tone is within a certain range, the test passes.

Table 9-9. TEST #7 Conference Circuit Test

Error Code	Test Result	Description/ Recommendation
	ABORT	Could not allocate the necessary system resources to run this test. 1. Retry the command at 1-minute intervals a maximum of 5 times. 2. If the test continues to abort, escalate the problem.
1000	ABORT	System resources required to run this test are not available. The port may be busy with a valid call. Use the **display port UUCSSpp** command to determine the station extension. Use the **status station** command to determine the service state of the port. If the service state indicates that the port is in use, then the port is unavailable for certain tests. (Refer to the “Status” commands section in Chapter 8, "Maintenance Commands", for a full description of all possible states.) You must wait until the port is idle before retesting. 1. If the port status is idle, then retry the command at 1-minute intervals a maximum of 5 times. 2. If the test continues to abort, escalate the problem.

Continued on next page

Table 9-9. TEST #7 Conference Circuit Test — *Continued*

Error Code	Test Result	Description/ Recommendation
1004	ABORT	The port was seized by a valid call during the test. The test has been aborted. Use the **display port UUCSSpp** command to determine the station extension. Use the **status station** command to determine the service state of the port. If the service state indicates that the port is in use, then the port is unavailable for certain tests. (Refer to the “Status” commands section in Chapter 8, "Maintenance Commands", for a full description of all possible states.) You must wait until the port is idle before retesting. 1. Retry the command at 1-minute intervals a maximum of 5 times. 2. If the test continues to abort and the port is not in use, escalate the problem.
1018	ABORT	Test disabled via administration. This only applies to analog stations. 1. To enable the test for the particular analog station being tested, enter the **change station <extension>** command and change the “Test?” field on the Station Form from “n” to “y.”
2000	ABORT	Response to the test request was not received within the allowable time period.
2100	ABORT	Could not allocate the necessary system resources to run this test. 1. Retry the command at 1-minute intervals a maximum of 5 times. 2. If the test continues to abort, escalate the problem.
Any	FAIL	The NPE of the tested port did not conference the tones correctly. This causes noisy and unreliable connections. 1. Replace the circuit pack.
	PASS	The port can correctly conference multiple connections. User-reported troubles on this port should be investigated by using other port tests and by examining station, trunk, or external wiring.

Loop Around Test (#161)

Each Analog port consists of an NPE for port connectivity and gain and conferencing functionality. This test is designed to check the on-board transmission capabilities of the NPE on the analog port. A Tone Detector and a Tone Generator talk and listen on the same pair of time slots as the Analog Port. The Analog Port is then instructed to go into loop around mode (see the following below). The test passes if the signal measured by the Tone Detector is within acceptable limits. For the TN566, gain has been artificially reduced to be within tolerances required by switch tone level measurements.

Table 9-10. TEST #161 Loop Around Test

Error Code	Test Result	Description/ Recommendation
	ABORT	Could not allocate the necessary system resources to run this test. 1. Retry the command at 1-minute intervals a maximum of 5 times. 2. If the test continues to abort, escalate the problem.
1000	ABORT	System resources required to run this test are not available. The port may be busy with a valid call. Use the **display port UUCSSpp** command to determine the station extension. Use the **status station** command to determine the service state of the port. If the service state indicates that the port is in use, then the port is unavailable for certain tests. (Refer to the “Status” commands section in Chapter 8, "Maintenance Commands", for a full description of all possible states.) You must wait until the port is idle before retesting. 1. If the port status is idle, then retry the command at 1-minute intervals a maximum of 5 times. 2. If the test continues to abort, escalate the problem.
1002	ABORT	The system could not allocate time slots for the test. The system may be under heavy traffic conditions or it may have time slots out-of-service due to TDM-BUS errors. Refer to TDM-BUS (TDM Bus) Maintenance documentation to diagnose any active TDM-BUS errors. 1. If system has no TDM-BUS errors and is not handling heavy traffic, repeat test at 1-minute intervals a maximum of 5 times. 2. If the test continues to abort, escalate the problem.

Continued on next page

Table 9-10. TEST #161 Loop Around Test — *Continued*

Error Code	Test Result	Description/ Recommendation
1003	ABORT	The system could not allocate a tone receiver for the test. The system may be oversized for the number of Tone Detectors present or some Tone Detectors may be out-of-service. 1. Look for TTR-LEV errors in the Error Log. If present, refer to the TTR-LEV (TTR Level) Maintenance documentation. 2. Look for TONE-PT errors in the Error Log. If present, refer to the TONE-PT (Tone Generator) Maintenance documentation. 3. If neither condition exists, retry the test at 1-minute intervals a maximum of 5 times. 4. If the test continues to abort, escalate the problem.
1004	ABORT	The port was seized by a valid call during the test. The test has been aborted. Use the **display port UUCSSpp** command to determine the station extension. Use the **status station** command to determine the service state of the port. If the service state indicates that the port is in use, then the port is unavailable for certain tests. (Refer to the “Status” commands section in Chapter 8, "Maintenance Commands", for a full description of all possible states.) You must wait until the port is idle before retesting. 1. Retry the command at 1-minute intervals a maximum of 5 times. 2. If the test continues to abort and the port is not in use, escalate the problem.
1018	ABORT	Test disabled via administration. To enable the test for the particular analog station being tested, enter the **change station <extension>** command and change the ‘‘Test?’’ field on the Station Form from ‘‘n’’ to ‘‘y.’’
2000	ABORT	Response to the test request was not received within the allowable time period.

Continued on next page

Table 9-10. TEST #161 Loop Around Test — *Continued*

Error Code	Test Result	Description/ Recommendation
2100	ABORT	Could not allocate the necessary system resources to run this test. 1. Retry the command at 1-minute intervals a maximum of 5 times. 2. If the test continues to abort, escalate the problem.
	FAIL	The reflective Loop Around Test failed. This causes noisy or unreliable connections or other users calling this port may hear an echo. 1. Replace the circuit pack.
	PASS	The port is able to provide an analog transmission path to the station equipment. User-reported troubles on this port should be investigated by using other port tests, by examining station wiring, or by examining the station.

ADXDP-BD (AUDIX Circuit Pack)

MO Name As It Appears In Alarm Log	Alarm Level	Initial System Technician Command To Run (a)	Full Name of MO
ADXDP-BD	MINOR	test board UUCSS sh	AUDIX Circuit Pack
ADXDP-BD	WARNING	test board UUCSS sh	AUDIX Circuit Pack

a. *UU* is the universal cabinet number (1 for PPN, 2 - 44 for EPNs). *C* is the carrier designation (A, B, C, D, or E). *SS* is the number of the slot in which the circuit pack resides (01 to 21).

The ADXDP-BD maintenance object represents a TN566/TN2169 DEFINITY AUDIX circuit pack (sometimes called Embedded AUDIX) operating in digital-port (DP) mode. (On G3r V1 systems this maintenance object is AUDIX-BD). For circuit-pack-level problems, see XXX-BD. Port-level problems are covered by ADXDP-PT.

On G3r V1 systems, TN566/TN2169 DEFINITY AUDIX circuit packs operating in control-link mode appear to the system as a TN746 Analog Line circuit pack with vintage greater than 50. The maintenance strategy for ports on the TN566 operating in control-link mode is described in ADXCL-PT.

DEFINITY AUDIX™ consists of two circuit packs that occupy 5 slots on a port carrier. The tests described in this manual apply only to switch-side maintenance which tests circuit pack components related to the TDM bus interface. The AUDIX system has an extensive maintenance strategy of its own that is described in *DEFINITY AUDIX System Maintenance*, 585-300-110.

ADXDP-PT (AUDIX Digital Port)

MO Name As It Appears In Alarm Log	Alarm Level	Initial System Technician Command To Run (a)	Full Name of MO
ADXDP-PT	MINOR	test port UUCSSpp l	AUDIX Digital Port
ADXDP-PT	WARNING	test port UUCSSpp sh	AUDIX Digital Port

a. *UU* is the universal cabinet number (1 for PPN, 2 - 44 for EPNs). *C* is the carrier designation (A, B, C, D, or E). *SS* is the number of the slot in which the circuit pack resides (01 to 21). *pp* is the two digit port number (01, 02, ...).

CAUTION:
Never do any of the following without first shutting down AUDIX:

- *Remove DEFINITY AUDIX circuit packs*
- *Recycle power to a carrier containing DEFINITY AUDIX circuit packs*
- *Remove power to a carrier or cabinet containing DEFINITY AUDIX circuit packs*

CAUTION:
Doing so can damage AUDIX software. Follow instructions on the TN566/TN2169 faceplate (these also appear below).

The ADXDP-PT maintenance object represents a port on a TN566/TN2169 DEFINITY AUDIX circuit pack (sometimes called Embedded AUDIX) operating in digital-port (DP) mode. (On G3r V1 systems this maintenance object appears as AUDIX-PT). For circuit-pack-level problems (ADXDP-BD), see XXX-BD.

The maintenance strategy for ports on the TN566 operating in control-link mode is described in ADXCL-PT. On G3r V1 systems, TN566/TN2169 DEFINITY AUDIX circuit packs operating in control-link mode appear to the system as a TN746 Analog Line circuit pack with vintage greater than 50.

The tests described in this manual apply only to switch-side maintenance which tests circuit pack components related to the TDM bus interface. The AUDIX system has an extensive maintenance strategy of its own that is described in *DEFINITY AUDIX System Maintenance*, 585-300-110.

AUDIX is a full-service voice messaging system that allows switch users and outside callers to write, edit, send, and forward voice messages. It resides on a combined pair of circuit packs: the TN566 Multifunction Board (MFB) and the TN2169 Alarm Board (ALB). Because of its size this combination occupies 5

slots, but only one slot is functional as far as the switch is concerned. The other 4 slots are seen by the switch as ‘‘AUDIX-reserved’’ slots (or ADXDP-RS.)

In DP mode the TN566 pack supports up to 8 voice ports, each with a primary information channel and a secondary information channel. Ports are administered in increments of two. When a call to a station with an AUDIX login is not answered, AUDIX answers the call using one of the available voice ports.

Unlike other AUDIX systems, DEFINITY AUDIX is not an adjunct.

Shutting Down DEFINITY AUDIX

Always shut down the AUDIX system before removing the TN566/TN2169 or removing or recycling power to it.

1. When AUDIX is shut down, the LCD display on the faceplate will display `E_SHUT`, `M_SHUT` or `386_DEAD`.
2. If one of the above is not displayed, press the `BOOT/SHUTDOWN` button on the AUDIX faceplate and wait for `M_SHUT` to be displayed steadily. (The display will flash while the disk spins down).
3. You can now safely remove (or recycle power to) the AUDIX circuit packs.
4. To restart AUDIX from the `SHUT` service state, press the `BOOT/SHUTDOWN` button.

Hardware Error Log Entries and Test to Clear Values

DEFINITY AUDIX Digital Port Error Log Entries					
Error Type	**Aux Data**	**Associated Test**	**Alarm Level**	**On/Off Board**	**Test to Clear Value**
0*	0	Any	Any	Any	test port UUCSSpp sh r 1
1(a)	40987	None	WARNING	OFF	
1(b)	1 to 20	None	WARNING	OFF	
15(c)	Any	None			
18(d)	0	busyout port UUCSSpp	WARNING	OFF	release port UUCSSpp
23(e)	0	None	WARNING	OFF	
130(f)		None	WARNING	ON	test port UUCSSpp sh
257(g)	40971	None			
513(h)	Any	None			
1537(i)	40968	None	WARNING	OFF	
1793		Voice & Ctrl. Local Loop Test (#13)	MIN/WRN†	ON	test port UUCSSpp l r 3
2049		NPE Crosstalk Test (#9)	MIN/WRN†	ON	test port UUCSSpp l r 3
2305(j)	40967	None			
3840(k)	40965	None			
3840(l)	41029	None			

* Run the Short Test Sequence first. If all tests pass, run the Long Test Sequence. Refer to the appropriate test description and follow the recommended procedures.

† Minor alarms on this MO may be downgraded to Warning alarms based on the values used in the **set options** command.

Notes:

a. The user may experience a noisy port or link. This is an off-board problem that is detected by the port circuit. If this problem exists, replace the circuit pack (see precaution at the beginning of this section). Once the problem is resolved, the alarm is retired after a predetermined amount of time.

b. At least 15 off-board problems have been detected with the link to the voice port. When an error with the link is detected, an on-board counter is incremented.

   The user could experience a noisy port or link. This is an off-board problem that is detected by the port circuit. If this problem exists, replace the circuit pack (see precaution at the beginning of this section). Once the problem is resolved, the alarm is retired after a predetermined amount of time.

c. This is an internal type error that occurs when an audit request fails.

d. The port is busied-out by command. You can release the port via the **release port** UUCSSpp command.

e. The circuit pack is administered but not physically installed. The alarm will clear when a circuit pack is inserted.

f. The circuit pack has been removed or has been insane for more than 21 minutes. To clear the error, reinsert or replace the AUDIX circuit pack (see precaution at the beginning of this section).

g. Something is interfering with transmitting to the voice port. This is usually an on-board problem and can be ignored if no user complaints are received.

h. AUDIX is not available to the switch, possibly due to a busyout on the AUDIX system. Check out the AUDIX system referring *DEFINITY AUDIX System Maintenance*, 585-300-110, if necessary.

i. An in-line maintenance error has generated an off-board warning due to some problem with the link to the voice port. This can be ignored if no user complaints are received. If the problem persists, replace the circuit pack (see precaution at the beginning of this section). Once the problem is resolved, the alarm is retired after a certain period of time.

j. The link between the circuit pack and the voice port is successfully reset. No craft action is necessary.

k. No voice ports are connected to the DEFINITY AUDIX circuit pack. No maintenance action is required.

l. The message buffer in the circuit pack is full.

System Technician-Demanded Tests: Descriptions and Error Codes

Always investigate tests in the order presented in the table below when you are inspecting errors in the system. By clearing error codes associated with the *Voice and Control Channel Local Loop Around Test* for example, you may also clear errors generated from other tests in the testing sequence.

Order of Investigation	Short Test Sequence	LongTest Sequence	D/ND*
Voice and Control Channel Local Loop Around Test (#13)		X	ND
NPE Crosstalk Test (#9)		X	ND

* D = Destructive; ND = Nondestructive

NO-OP Tests

The maintenance strategy for DEFINITY AUDIX emulates the one for DIG-LINE. The tests listed below apply only to DIG-LINE and not to DEFINITY AUDIX. These are referred to as *NO-OP* tests, and they always return PASS.

- Electronic Power Feed Test (#11)
- Station Lamp Updates Test (#16)
- Station (Digital) Audits Test (#17)

NPE Crosstalk Test (#9)

One or more Network Processing Elements (NPEs) reside on each circuit pack with a TDM Bus interface. The NPE controls port connectivity and gain, and it provides conferencing functions on a per-port basis. The NPE Crosstalk Test verifies that this port's NPE channel talks on the selected time slot and that it never crosses over to time slots reserved for other connections. If the NPE is not working correctly, one-way and noisy connections may be observed. This test is part of a port's Long Test Sequence, and it takes about 20 to 30 seconds to complete. Crosstalk testing is performed on both the primary information channel (voice) and on the secondary information channel (data) associated with each DEFINITY AUDIX port. If this test fails on either channel, the voice port is taken out-of-service.

Table 9-11. TEST #9 NPE Crosstalk Test

Error Code	Test Result	Description/ Recommendation
1	ABORT	During testing of the primary information channel, system resources may not have been available. Also, the port may have been busy during the test. 1. Check the port status. Use the **display port UUCSSpp** command to determine the voice port extension of the port. Use the **status station** command to determine the service state of the port. If the service state indicates that the port is in use, the port is unavailable for this test. You must wait until the port is idle. 2. If the port status is idle, retry the command at 1-minute intervals a maximum of 5 times. 3. If the test continues to abort, escalate the problem.
2	ABORT	System resources may not have been available, or the port may have been busy during the test. 1. Check if port is being used. Retry the command after 1 minute. 2. If the test continues to abort after 5 attempts, escalate the problem.

Continued on next page

Table 9-11. TEST #9 NPE Crosstalk Test — *Continued*

Error Code	Test Result	Description/ Recommendation
1000	ABORT	System resources required to run this test are not available. The port may be in use. Use the **display port UUCSSpp** command to determine the voice port extension of the port. Use the **status station** command to determine the service state of the port. If the service state indicates that the port is in use, the port is unavailable for certain tests. (Refer to the “Status” commands section in Chapter 8, "Maintenance Commands", for a full description of all possible states.) You must wait until the port is idle before retesting. 1. If the port status is idle, retry the command at 1-minute intervals a maximum of 5 times. 2. If the test continues to abort, escalate the problem.
1001	ABORT	System resources required to run this test are not available. 1. Retry the command at 1-minute intervals a maximum of 5 times. 2. If the test continues to abort, escalate the problem.
1002	ABORT	The system could not allocate time slots for the test. The system may be under heavy traffic conditions, or it may have time slots out-of-service due to TDM-BUS errors. Refer to TDM-BUS (TDM Bus) Maintenance to diagnose any active TDM-BUS errors. 1. If system has no TDM-BUS errors, and if it is not handling heavy traffic, repeat the test at 1-minute intervals a maximum of 5 times. 2. If the test continues to abort, escalate the problem.

Continued on next page

Table 9-11. TEST #9 NPE Crosstalk Test — *Continued*

Error Code	Test Result	Description/ Recommendation
1003	ABORT	The system could not allocate a tone receiver for the test. The system may be oversized for the number of Tone Detectors present, or some Tone Detectors may be out-of-service. 1. Look for TTR-LEV errors in the Error Log. If present, refer to TTR (TTR Level) Maintenance documentation. 2. Look for TONE-PT errors in the Error Log. If present, refer to TONE-PT (Tone Generator) Maintenance documentation. 3. If neither condition exists, retry the command at 1-minute intervals a maximum of 5 times. 4. If the test continues to abort, escalate the problem.
1004	ABORT	The port was put in use during the test. The test has been aborted. Use the **display port UUCSSpp** command to determine the voice port extension of the port. Use the **status station** command to determine the service state of the port. If the service state indicates that the port is in use, the port is unavailable for certain tests. (Refer to descriptions of the **status** commands in Chapter 8, "Maintenance Commands" for explanations of all possible states.) You must wait until the port is idle before retesting.
1020	ABORT	Test disabled via background testing. Use the **status station** command to determine when the voice port is available for testing.
2000	ABORT	Response to the test request was not received within the allowable time period. 1. Retry the command at 1-minute intervals a maximum of 5 times. 2. If the test continues to abort, escalate the problem.

Continued on next page

Table 9-11. TEST #9 NPE Crosstalk Test — *Continued*

Error Code	Test Result	Description/ Recommendation
1 2	FAIL	The Network Processing Element (NPE) of the tested port was found to be transmitting in error. This causes noisy and unreliable connections. Failure code 1 indicates that the Crosstalk test failed on the primary channel. Failure code 2 indicates that the Crosstalk test failed on the secondary channel. 1. Replace the circuit pack (see precaution at the beginning of this section).
	PASS	The port is using its allocated time slots correctly. 1. To be sure that this is not an intermittent problem, repeat this test up to a maximum of 10 times to make sure it continues to pass. 2. If complaints still exist, examine the connections.

Voice and Control Channel Local Loop Test (#13)

This test checks the information and control channels between the Switch Processing Element (SPE) and the DEFINITY AUDIX port circuit. The SPE sends a message to loop around both the information and control channels for the port. First, the primary information (voice) channel loop back test is run. The test is performed by sending a digital count from the Tone-Clock circuit pack on the primary information channel time slot and receiving the same digital count with a general purpose Tone Detector.

While the primary information channel is still looped around, the Control Channel Loop Around Test is performed. This test involves sending four different transparent patterns to the on-board microprocessor which loops them back. The looped back patterns are compared to the originals to check for data integrity.

The Loop Around Test for the secondary information (data) channel is then performed. This test is the same as the primary information channel loop around test.

Next, a Conference Test is implemented for the primary information channel. This test is the same as Conference Test #6.

Only one value (Pass, Fail, or Abort) is generated as a result of the four tests run. If any test fails or aborts, the sequence is stopped.

Table 9-12. TEST #13 Voice and Control Channel Local Loop Test

Error Code	Test Result	Description/ Recommendation
	ABORT	Internal System Error 1. Retry the command at 1-minute intervals a maximum of 5 times. 2. If the test continues to abort, escalate the problem.
1000	ABORT	System resources required to run this test are not available. The port may be in use. Use the **display port UUCSSpp** command to determine the voice port extension of the port. Use the **status station** command to determine the service state of the port. If the service state indicates that the port is in use, the port is unavailable for certain tests. (Refer to **status** commands in Chapter 8, "Maintenance Commands" for explanations of all possible states.) You must wait until the port is idle before retesting. 1. If the port status is idle, retry the command at 1-minute intervals a maximum of 5 times. 2. If the test continues to abort, escalate the problem.
1001	ABORT	System resources required to run this test are not available. 1. Retry the command at 1-minute intervals a maximum of 5 times. 2. If the test continues to abort, escalate the problem.
1002	ABORT	The system could not allocate time slots for the test. The system may be under heavy traffic conditions, or it may have time slots that are out-of-service due to TDM-BUS errors. Refer to TDM-BUS (TDM Bus) Maintenance to diagnose any active TDM-BUS errors. 1. If the system has no TDM-BUS errors, and if it is not handling heavy traffic, repeat the test at 1-minute intervals a maximum of 5 times. 2. If the test continues to abort, escalate the problem.

Continued on next page

Table 9-12. TEST #13 Voice and Control Channel Local Loop Test — *Continued*

Error Code	Test Result	Description/ Recommendation
1003	ABORT	The system could not allocate a tone receiver for the test. The system may be oversized for the number of Tone Detectors present, or some Tone Detectors may be out-of-service. 1. Look for TTR-LEV errors in the Error Log. If present, refer to TTR-LEV (TTR Level) Maintenance documentation. 2. Look for TONE-PT errors in the Error Log. If present, refer to TONE-PT (Tone Generator) Maintenance documentation. 3. If neither condition exists, retry the command at 1-minute intervals a maximum of 5 times. 4. If the test continues to abort, escalate the problem.
1004	ABORT	The port was put in use during the test. The test has been aborted. Use the **display port UUCSSpp** to determine the voice port extension of the port. Use the **status station** command to determine the service state of the port. If the service state indicates that the port is in use, the port is unavailable for certain tests. (Refer to the “Status” commands section in Chapter 8, "Maintenance Commands", for a full description of all possible states.) You must wait until the port is idle before retesting. 1. Retry the command at 1-minute intervals a maximum of 5 times. 2. If the test continues to abort, and if the port is not in use, escalate the problem.

Continued on next page

Table 9-12. TEST #13 Voice and Control Channel Local Loop Test — *Continued*

Error Code	Test Result	Description/ Recommendation
2000	ABORT	Response to the test request was not received within the allowable time period. 1. Retry the command at 1-minute intervals a maximum of 5 times. 2. If the test continues to abort, escalate the problem.
2100	ABORT	Could not allocate the necessary system resources to run this test. 1. Rerun the test at 1-minute intervals a maximum of 5 times. 2. If the test continues to abort, escalate the problem.

Continued on next page

Table 9-12. TEST #13 Voice and Control Channel Local Loop Test — *Continued*

Error Code	Test Result	Description/ Recommendation
7	FAIL	Conference Test failed on the primary channel. In some cases, users may not notice a disruption in service. In extreme cases, the conferencing feature may not work at all.
14	FAIL	The primary voice channel is not transmitting properly. User impact may range from no noticeable effect to loss of use of this port.
15	FAIL	The control channel between the processor and DEFINITY AUDIX circuit pack is not transmitting properly. User impact may range from User impact may range from no noticeable effect to loss of use of this port. This failure could also be disruptive to other users.
16	FAIL	The secondary voice channel is not transmitting properly. User impact may range from no noticeable effect to loss of use of this port.
None	FAIL	The test failed for reasons external to the DEFINITY AUDIX circuit pack. 1. Run circuit pack tests to check the Tone Generator circuit pack and the Tone Detector circuit pack by using the **test board UUCSS s** command. 2. Resolve any problems that are detected on the Tone Generator circuit pack or Tone Detector circuit pack. 3. If the Tone Generator and Tone Detector circuit packs are functioning properly, and if the test still fails, replace the DEFINITY AUDIX circuit pack (see precaution at the beginning of this section).
	PASS	Voice and Control Channel Local Loop test passed. All channels are transmitting properly. 1. To be sure that this is not an intermittent problem, repeat this test up to 10 times and see if it continues to pass. 2. If complaints still exist, examine the connections.

ALARM-PT (ALARM PORT)

MO Name As It Appears In Alarm Log	Alarm Level	Initial System Technician Command To Run (a)	Full Name of MO
ALARM-PT	MIN	test port UUCSSpp l	Alarm-Port
ALARM-PT	WRN	test port UUCSSpp sh	Alarm-Port

a. UU is the universal cabinet number (1 for PPN, 2 -44 for EPNs). C is the carrier designation (A, B, C, D, or E). SS is the number of the slot in which the circuit pack resides (01 to 21). pp is the two digit port number (01, 02, ...).

The Alarm Port Maintenance Object provides on-board maintenance for an analog line port that is administered as an external device alarm port. Test are provided to verify the analog line ports ability to detect an external device alarm. The External Device Alarm (EXT-DEV) Maintenance Object is used for the off-board external device alarm.

Hardware Error Log Entries and Test to Clear Values

8-Port Analog Line Error Log Entries					
Error Type	**Aux Data**	**Associated Test**	**Alarm Level**	**On/Off Board**	**Test to Clear Value**
0*	0	Any	Any	Any	test port UUCSSpp sh r 1
15 (a)	Any	Audits and Updates Test (#36)			
18	0	busy-out station *extension*	WARNING	OFF	release station *extension*
130 (b)		None	WARNING	ON	test port UUCSSpp sh
769		Battery Feed Test (#35)	MINIOR	ON	test port UUCSSpp sh r 2

* Run the Short Test Sequence first. If all tests pass, run the Long Test Sequence. Refer to the appropriate test description and follow the recommended procedures.

Notes:

a. This is a software audit error that does not indicate any hardware malfunction. Run Short Test Sequence and investigate errors (if any).

b. This error type indicates that the circuit pack has been removed or has been insane for more than 11-minutes. To clear the error, reinsert or replace the circuit pack.

System Technician-Demanded Tests: Descriptions and Error Codes

Always investigate tests in the order presented in the table below when inspecting errors in the system. By clearing error codes associated with the *Battery Feed Test*, for example, you may also clear errors generated from other tests in the testing sequence.

Order of Investigation	Short Test Sequence	LongTest Sequence	D/ND*
Battery Feed Test (#35)	X	X	ND
Station Status and Translation Audits and Updates Test (#36)	X	X	ND

* D = Destructive; ND = Nondestructive

Battery Feed Test (also called Port Diagnostic Test) (#35)

The battery feed chip provides power to the telephone equipment, signaling, rotary dial pulsing, transmission, and balance. This test checks the signaling and switchhook capabilities of the battery feed chip by terminating the port, applying battery, and trying to detect a current.

Table 9-13. TEST #35 Battery Feed Test

Error Code	Test Result	Description/ Recommendation
	ABORT	Could not allocate the necessary system resources to run this test. 1. Retry the command at 1-minute intervals a maximum of 5 times. 2. If the test continues to abort, escalate the problem.
1000	ABORT	System resources required to run this test are not available. The port may be reporting an external device alarm. 1. Enter **test external-device-alarm port UUCSSpp** to determine if the port is reporting an EXT-DEV failure before retesting. 2. When the port has no EXT-DEV failure, retry the command at 1-minute intervals up to 5 times. 3. If the test continues to abort, escalate the problem.
1004	ABORT	The port received an EXT-DEV failure during the test. The test has been aborted. 1. Enter **test external-device-alarm port UUCSSpp** to determine if the port is reporting an EXT-DEV failure before retesting. 2. When the port has no EXT-DEV failure, retry the command at 1-minute intervals up to 5 times. 3. If the test continues to abort, escalate the problem.

Continued on next page

Table 9-13. TEST #35 Battery Feed Test — *Continued*

Error Code	Test Result	Description/ Recommendation
2000	ABORT	Response to the test request was not received within the allowable time period.
2100	ABORT	Could not allocate the necessary system resources to run this test. 1. Retry the command at 1-minute intervals a maximum of 5 times. 2. If the test continues to abort, escalate the problem.
	FAIL	The port's battery feed chip is unable to supply sufficient power to sense the external device alarm. This may occur when the test is performed at the same time that the external device contact closure occurred. 1. Enter **test external-device-alarm port UUCSSpp** to determine if the port is reporting an EXT-DEV failure before retesting. Wait until the port has no EXT-DEV failure before retesting 2. If the test continues to fail with a new circuit pack, escalate the problem.
	PASS	The port's battery feed chip is able to provide power to the external device alarm to detect contact closure.

Station Status and Translation Audits and Updates Test (#36)

For an analog line port that is administered as an external alarm, this test is limited to updating the software with the switchhook state.

Table 9-14. TEST #36 Station Status and Translation Audits and Updates Test

Error Code	Test Result	Description/ Recommendation
	ABORT	Could not allocate the necessary system resources to run this test. 1. Retry the command at 1-minute intervals a maximum of 5 times. 2. If the test continues to abort and the port is not in use, escalate the problem.
1004	ABORT	The port received an EXT-DEV failure during the test. The test has been aborted. 1. Enter **test external-device-alarm port UUCSSpp** to determine if the port is reporting an EXT-DEV failure before retesting. 2. When the port has no EXT-DEV failure, retry the command at 1-minute intervals up to 5 times. 3. If the test continues to abort, escalate the problem.
1006	ABORT	This port has been busied out by command. 1. Look in the Error Log for Error Type 18 (port busied out) for this port. If this error is present, then release the port with the **release port UUCSSpp** command and run the test again. 2. If the test continues to abort, escalate the problem.
2000	ABORT	Response to the test request was not received within the allowable time period.
2100	ABORT	Could not allocate the necessary system resources to run this test. 1. Retry the command at 1-minute intervals a maximum of 5 times. 2. If the test continues to abort, escalate the problem.

Continued on next page

Table 9-14. TEST #36 Station Status and Translation Audits and Updates Test — *Continued*

Error Code	Test Result	Description/ Recommendation
1	FAIL	This failure does not indicate a hardware problem. The switchhook audit failed, this condition may occur when the audit is performed at the same time that the terminal equipment goes off-hook. 1. Enter **test external-device-alarm port UUCSSpp** to determine if the port is reporting an EXT-DEV failure before retesting. Wait until the port has no EXT-DEV failure before retesting 2. When the port has no EXT-DEV failure, retry the command at 1-minute intervals up to 5-times. 3. If the test continues to fail, escalate the problem.
7	FAIL	The translation update failed. This does not indicate a hardware problem but may be an internal software error.
	PASS	The software and the port processor have the same status.

ANL-16-L (16-Port Analog Line)

MO Name As It Appears In Alarm Log	Alarm Level	Initial System Technician Command To Run (a)	Full Name of MO
ANL-16-L	MIN	test port UUCSSpp l	16-Port Analog Line
ANL-16-L	WRN	test port UUCSSpp sh	16-Port Analog Line

a. UU is the universal cabinet number (1 for PPN, 2 -44 for EPNs). C is the carrier designation (A, B, C, D, or E). SS is the number of the slot in which the circuit pack resides (01 to 21). pp is the two digit port number (01, 02, ...).

NOTE:
On G3r V1 systems, TN566/TN2169 DEFINITY AUDIX circuit packs operating in control-link mode appear to the system as a TN746 Analog Line circuit pack. To see if this is the case, enter **list config board UUCSS**. If the vintage is less than 49, the circuit pack is a TN746. If the vintage is *49 + n*, the circuit pack is a TN566 of vintage *n*. The maintenance strategy for ports on the TN566 operating in control-link mode is described in the section on ADXCL-PT, (AUDIX Analog Line/Control Link).

The circuit packs listed below each provide 16 analog line ports for single-line voice terminals. The table indicates which circuit packs are equipped with lightning protection so that they can be used for off-premises (out-of -building) stations, which ones support the neon message waiting lamp feature, and which ones are supported by G3r V1 systems. G3r V2 systems support all of them.

16-Port Analog Line Circuit Packs

Circuit Pack	Off-Premises	Neon	G3r V1
TN468			
TN468B	y		
TN479			
TN746		y	y
TN746B	y	y	y
TN2135	y		
TN2144	y		
TN2149	y		
TN2180	y		

No maintenance of the terminal connected to the 16-Port Neon Analog Line circuit pack is performed, except to determine whether or not the terminal is connected. Failures of the neon message waiting lamp power and the common ringing application circuitry are reported as part of common port circuit pack errors; see errors 1281 and 1793 in the XXX-BD section of this chapter.

Ringing Caused by Maintenance Testing

Test #48 may cause some terminal equipment to ring briefly during daily maintenance. If this ringing is disturbing the customer or the terminal equipment, it should be disabled in the `Tests` field of the **change station** extension form. Be aware that this action will also disable Tests #6, 7, 161 and 35.

Hardware Error Log Entries and Test to Clear Values

NOTE:
On G3r V1 systems, TN566/TN2169 DEFINITY AUDIX circuit packs operating in control-link mode appear to the system as a TN746 Analog Line circuit pack. To see if this is the case, enter **list config board UUCSS**. If the vintage is less than 49, the circuit pack is a TN746. If the vintage is *49 + n*, the circuit pack is a TN566 of vintage *n*. The maintenance strategy for ports on the TN566 operating in control-link mode is described in ADXCL-PT for

16-Port Analog Line Error Log Entries

Error Type	Aux Data	Associated Test	Alarm Level	On/Off Board	Test to Clear Value
0*	0	Any	Any	Any	test port UUCSSpp sh r 1
1(a)	40960 40975 40977	none			
15(b)	Any	Audits and Updates Test (#36)			
18	0	busy-out station *extension*	WRN	ON	release station *extension*
130(c)		None	WRN	ON	test port UUCSSpp sh
257(d)	40973	none			
513(e)		Station Present Test (#48)	WRN	OFF	test port UUCSSpp sh r 2
769		Battery Feed Test (#35)	MIN/ WRN†	ON	test port UUCSSpp sh r 2
1025		Loop Around Test (#161)	MIN/ WRN†	ON	test port UUCSSpp l r 2
1281		Conference Test (#7)	MIN/ WRN†	ON	test port UUCSSpp l r 2
1537		NPE Crosstalk Test (#6)	MIN/ WRN†	ON	test port UUCSSpp l r 2

* Run the Short Test Sequence first. If all tests pass, run the Long Test Sequence. Refer to the appropriate test description and follow the recommended procedures.

† Minor alarms on this MO may be downgraded to Warning alarms based on the values used in the **set options** command.

Notes:

a. These are in-line errors and can only be resolved over time.

- 40960 Indicates that too many simultaneous incoming ringing attempts were made on this board. Only 4 ports on a board may ring simultaneously. A 5th incoming call will cause an inline error from the board.
- 40975 indicates that the terminal equipment was on-hook when ring-tip was detected during ringing. This usually indicates a failure in the terminal equipment or the type of terminal has a low ringer impedance. Call the terminal equipment and verify that the terminal rings. If the terminal doesn't ring, then replace it. Otherwise, issue the **test port UUCSSpp** command, and follow the procedure for Test #48.
- 40977 indicates that no terminal equipment was connected when ringing was attempted. Run the short test via the **test port UUCSSpp** command, and follow the procedure for the results of Test #48.

b. This is a software audit error that does not indicate any hardware malfunction. Run Short Test Sequence and investigate associated errors (if any).

c. This error type indicates that the circuit pack has been removed or has been insane for more than 11-minutes. To clear the error, reinsert or replace the circuit pack.

d. This is an in-line error and can only be resolved over time. This error indicates that ringing voltage is absent. If only one Analog circuit pack in the system has this problem, then replace the circuit pack. If only Analog circuit packs on a particular carrier have this error, then the ringing generator may not be connected to this carrier. If Analog circuit packs on many carriers have this error, then it is probably a problem with the ringing generator.

e. Test #48 may cause some terminal equipment to ring briefly during daily maintenance. If this disturbs the customer or the terminal equipment, be disabled by setting the `Tests` field on the **change station** extension form to n. On some software releases, this will also disable Tests #6, 7, 161, and 35.

System Technician-Demanded Tests: Descriptions and Error Codes

Always investigate tests in the order presented in the table below when inspecting errors in the system. By clearing error codes associated with the *Battery Feed Test,* for example, you may also clear errors generated from other tests in the testing sequence.

Order of Investigation	Short Test Sequence	LongTest Sequence	D/ND*
Battery Feed Test (#35)	X	X	ND
Station Present Test (#48)	X	X	ND
Loop Around Test (#161)		X	ND
Conference Test (#7)		X	ND
NPE Crosstalk Test (#6)		X	ND
Station Status and Translation Audits and Updates Test (#36)	X	X	ND

* D = Destructive; ND = Nondestructive

NPE Crosstalk Test (#6)

One or more Network Processing Elements (NPEs) reside on each circuit pack with a TDM Bus interface. The NPE controls port connectivity and gain, and provides conferencing functions on a per-port basis. The NPE Crosstalk Test verifies that this port's NPE channel talks on the selected time slot and never crosses over to time slots reserved for other connections. If the NPE is not working correctly, one-way and noisy connections may be observed. This test is usually part of the long test sequence and takes about 20 to 30 seconds to complete

Table 9-15. TEST #6 NPE Crosstalk Test

Error Code	Test Result	Description/ Recommendation
	ABORT	Could not allocate the necessary system resources to run this test. 1. Retry the command at 1-minute intervals a maximum of 5 times. 2. If the test continues to abort, escalate the problem.
1000	ABORT	System resources required to run this test are not available. The port may be busy with a valid call. This result is also reported for the system's Music-on-Hold port when it is off-hook, which it usually is. 1. Enter **display port** UUCSSpp to determine the station's extension. Enter **status station** extension to determine the service state of the port. If the port is in use, it will be unavailable for certain tests. (Refer to Chapter 8, "Maintenance Commands", for a description of service states.) Wait until the port is idle before retesting. 2. When the port is idle, retry the command at 1-minute intervals up to 5 times. 3. If the test continues to abort, escalate the problem.
1001	ABORT	Could not allocate the necessary system resources to run this test. 1. Retry the command at 1-minute intervals a maximum of 5 times. 2. If the test continues to abort, escalate the problem.

Continued on next page

Table 9-15. TEST #6 NPE Crosstalk Test — *Continued*

Error Code	Test Result	Description/ Recommendation
1002	ABORT	The system could not allocate time slots for the test. The system may be under heavy traffic conditions or it may have time slots out-of-service due to TDM-BUS errors. Refer to TDM-BUS Maintenance documentation to diagnose any active TDM-BUS errors. 1. If system has no TDM-BUS errors and is not handling heavy traffic, repeat test at 1-minute intervals a maximum of 5 times. 2. If the test continues to abort, escalate the problem.
1003	ABORT	The system could not allocate a tone receiver for the test. The system may be oversized for the number of Tone Detectors present or some Tone Detectors may be out-of-service. 1. Look for TTR-LEV errors in the Error Log. If present, refer to TTR-LEV (TTR Level) Maintenance documentation. 2. Look for TONE-PT errors in the Error Log. If present, refer to TONE-PT (Tone Generator) Maintenance documentation. 3. If neither condition exists, retry the test at 1-minute intervals a maximum of 5 times. 4. If the test continues to abort, escalate the problem.
1004	ABORT	The port was seized by a valid call during the test. The test has been aborted. Use the **display port UUCSSpp** command to determine the station extension. Use the **status station** command to determine the service state of the port. If the service state indicates that the port is in use, then the port is unavailable for certain tests. (Refer to Chapter 8, "Maintenance Commands", for a description of all possible states.) You must wait until the port is idle before retesting. 1. Retry the command at 1-minute intervals a maximum of 5 times. 2. If the test continues to abort and the port is not in use, escalate the problem.

Continued on next page

Table 9-15. TEST #6 NPE Crosstalk Test — *Continued*

Error Code	Test Result	Description/ Recommendation
1005	ABORT	This condition indicates that the test is not applicable when the analog port is used in a combined modem pool. This error can be ignored.
1018	ABORT	Test disabled via administration. 1. To enable the test for a particular station being tested, enter **change station** extension and set the `Test?` field on the station form to `y`.
2000	ABORT	Response to the test request was not received within the allowable time period.
2100	ABORT	Could not allocate the necessary system resources to run this test. 1. Retry the command at 1-minute intervals a maximum of 5 times. 2. If the test continues to abort, escalate the problem.
Any	FAIL	The NPE of the tested port was found to be transmitting in error. This will cause noisy and unreliable connections. 1. Replace the circuit pack.
	PASS	The port is correctly using its allocated time slots. User-reported troubles on this port should be investigated by using other port tests, by examining station wiring, or by examining the station.

Conference Circuit Test (#7)

One or more Network Processing Elements (NPEs) reside on each circuit pack with a TDM Bus interface. The NPE controls port connectivity and gain, and provides conferencing functions on a per-port basis. The Conference Circuit Test verifies that the NPE channel for the port being tested can correctly perform the conferencing function. The NPE is instructed to listen to several different tones and conference the tones together. The resulting signal is then measured by a Tone Detector port. If the level of the tone is within a certain range, the test passes.

Table 9-16. TEST #7 Conference Circuit Test

Error Code	Test Result	Description/ Recommendation
	ABORT	Could not allocate the necessary system resources to run this test. 1. Retry the command at 1-minute intervals a maximum of 5 times. 2. If the test continues to abort, escalate the problem.
1000	ABORT	System resources required to run this test are not available. The port may be busy with a valid call. This result is also reported for the system's Music-on-Hold port when it is off-hook, which it usually is. 1. Enter **display port** UUCSSpp to determine the station's extension. Enter **status station** extension to determine the service state of the port. If the port is in use, it will be unavailable for certain tests. (Refer to Chapter 8, "Maintenance Commands", for a description of service states.) Wait until the port is idle before retesting. 2. When the port is idle, retry the command at 1-minute intervals up to 5 times. 3. If the test continues to abort, escalate the problem.

Continued on next page

Table 9-16. TEST #7 Conference Circuit Test — *Continued*

Error Code	Test Result	Description/ Recommendation
1004	ABORT	The port was seized by a valid call during the test. The test has been aborted. Use the **display port UUCSSpp** command to determine the station extension. Use the **status station** command to determine the service state of the port. If the service state indicates that the port is in use, then the port is unavailable for certain tests. (Refer to Chapter 8, "Maintenance Commands", for a description of all possible states.) You must wait until the port is idle before retesting. 1. Retry the command at 1-minute intervals a maximum of 5 times. 2. If the test continues to abort and the port is not in use, escalate the problem.
1018	ABORT	Test disabled via administration. This only applies to analog stations. To enable the test for a particular station, enter **change station** extension and set the `Test?` field on the Station Form to `y`.
2000	ABORT	Response to the test request was not received within the allowable time period.
2100	ABORT	Could not allocate the necessary system resources to run this test. 1. Retry the command at 1-minute intervals a maximum of 5 times. 2. If the test continues to abort, escalate the problem.
Any	FAIL	The NPE of the tested port did not conference the tones correctly. This will cause noisy and unreliable connections. 1. Replace the circuit pack.
	PASS	The port can correctly conference multiple connections. User-reported troubles on this port should be investigated by using other port tests and by examining station, trunk, or external wiring.

Battery Feed Test (also called Port Diagnostic Test) (#35)

The battery feed chip provides power to the telephone equipment, signaling, rotary dial pulsing, transmission, and balance. This test checks the signaling and switchhook capabilities of the battery feed chip by terminating the port, applying battery and detecting the resulting current.

For the TN746B, Test #35 does not actually run and instead always returns PASS. Test #35 operates in the normal manner for TN746.

Table 9-17. TEST #35 Battery Feed Test

Error Code	Test Result	Description/ Recommendation
	ABORT	Could not allocate the necessary system resources to run this test. 1. Retry the command at 1-minute intervals a maximum of 5 times. 2. If the test continues to abort, escalate the problem.
1000	ABORT	System resources required to run this test are not available. The port may be busy with a valid call. This result is also reported for the system's Music-on-Hold port when it is off-hook, which it usually is. 1. Enter **display port UUCSSpp** to determine the station's extension. Enter **status station** extension to determine the service state of the port. If the port is in use, it will be unavailable for certain tests. (Refer to Chapter 8, "Maintenance Commands", for a description of service states.) Wait until the port is idle before retesting. 2. When the port is idle, retry the command at 1-minute intervals up to 5 times. 3. If the test continues to abort, escalate the problem.

Continued on next page

Table 9-17. TEST #35 Battery Feed Test — *Continued*

Error Code	Test Result	Description/ Recommendation
1004	ABORT	The port was seized by a valid call during the test. The test has been aborted. Use the **display port UUCSSpp** command to determine the station extension. Use the **status station** command to determine the service state of the port. If the service state indicates that the port is in use, then the port is unavailable for certain tests. (Refer to Chapter 8, "Maintenance Commands", for a description of all possible states.) You must wait until the port is idle before retesting. 1. Retry the command at 1-minute intervals a maximum of 5 times. 2. If the test continues to abort and the port is not in use, escalate the problem.
1005	ABORT	This condition indicates that the test is not applicable when the analog port is used in a combined modem pool. This error can be ignored.
1018	ABORT	Test disabled via administration. To enable the test for a particular station, enter **change station** extension and set the `Test?` field on the Station Form to `y`.
1392	ABORT	This port is currently a TTI port and the test will not execute on it. 1. Verify that the port is a TTI port using either the **display port** command (the display shows that the port is a TTI port) or the **list config** command (the display shows a `t` for the port). 2. If either **list config** or **display port** indicate that the port is *not* a TTI port, escalate the problem. If both commands indicate that the port is a TTI port, the abort is correct for the test, and no action is necessary.
2000	ABORT	Response to the test request was not received within the allowable time period.

Continued on next page

Table 9-17. TEST #35 Battery Feed Test — *Continued*

Error Code	Test Result	Description/ Recommendation
2100	ABORT	Could not allocate the necessary system resources to run this test. 1. Retry the command at 1-minute intervals a maximum of 5 times. 2. If the test continues to abort, escalate the problem.
	FAIL	The port's battery feed chip is unable to supply sufficient power to the terminal equipment. This may occur when the test is performed at the same time that the terminal goes off-hook. 1. Use **status station** to determine when the port is available for testing. When the port becomes available for testing, retry the command at 1-minute intervals a minimum of 5 times. If the test continues to fail, replace the circuit pack. 2. If the test continues to fail with the new circuit pack, follow normal escalation procedures.
	PASS	The port's battery feed chip is able to provide power to the station equipment to detect on-/off-hook, but may not be able to supply power for touch-tones. If touch-tones are inoperative on this station, then replace the circuit pack because this port is inoperative. User-reported troubles on this port should be investigated by using other port tests, by examining station wiring, or by examining the station.

Station Status and Translation Audits and Updates Test (#36)

This test updates the Analog port's message lamp state (if it has one) and translations (such as station type, dial type, network connection) with information kept in the software. The software is updated with the switchhook state reported by the port processor. When the ringer is in the off state, this test also turns off the station's ringer to prevent constant ringing caused by defective hardware

Table 9-18. Test #36 Station Status and Translation Audits and Updates

Error Code	Test Result	Description/ Recommendation
	ABORT	Could not allocate the necessary system resources to run this test. 1. Retry the command at 1-minute intervals a maximum of 5 times. 2. If the test continues to abort, escalate the problem.
1004	ABORT	The port was seized by a valid call during the test. The test has been aborted. Use the **display port UUCSSpp** command to determine the station extension. Use the **status station** command to determine the service state of the port. If the service state indicates that the port is in use, then the port is unavailable for certain tests. (Refer to Chapter 8, "Maintenance Commands", for a description of all possible states.) You must wait until the port is idle before retesting. 1. Retry the command at 1-minute intervals a maximum of 5 times. 2. If the test continues to abort and the port is not in use, escalate the problem.
1005	ABORT	This condition indicates that the test is not applicable when the analog port is used in a combined modem pool. This error can be ignored.

Continued on next page

Table 9-18. Test #36 Station Status and Translation Audits and Updates — *Continued*

Error Code	Test Result	Description/ Recommendation
1006	ABORT	This port has been busied out by command, or taken out-of-service by the failure of the NPE Crosstalk Test. 1. Look in the Error Log for Error Type 18 (port busied out) for this port. If this error is present then release the port with the **release station** extension command, and run the test again. 2. Look in the Error Log for Error Type 1025 (NPE Crosstalk Test failed) for this port. If this error is present, then investigate the errors associated with the NPE Crosstalk Test (#6) first. 3. If the test continues to abort, escalate the problem.
2000	ABORT	Response to the test request was not received within the allowable time period.
2100	ABORT	Could not allocate the necessary system resources to run this test. 1. Retry the command at 1-minute intervals a maximum of 5 times. 2. If the test continues to abort, escalate the problem.
1	FAIL	This does not indicate a hardware problem. The switchhook audit failed. The other updates were not performed because of this failure. This may occur when the audit is performed at the same time that the terminal equipment goes off-hook. Use the **status station** command to determine when the port is available for testing. 1. When the port becomes available for testing, retry the command at 1-minute intervals a maximum of 5 times. 2. If the test continues to fail, escalate the problem.
5	FAIL	This does not indicate a hardware problem. However, there may be an internal software error. The message waiting lamp update failed. The translation and ringer updates were not performed because of this failure.

Continued on next page

Table 9-18. Test #36 Station Status and Translation Audits and Updates — *Continued*

Error Code	Test Result	Description/ Recommendation
7	FAIL	The translation update failed. This does not indicate a hardware problem. However, there may be an internal software error. The ringer update was not performed because of this failure.
8	FAIL	This does not indicate a hardware problem. However, there may be an internal software error. The ringer update failed. 1. Retry the command at 1-minute intervals a maximum of 5 times. 2. If the test continues to fail, escalate the problem.
	PASS	The software and the port processor have the same status. User-reported troubles on this port should be investigated by using other port tests, by examining station wiring, or by examining the station.

Station Present Test (also called Ringing Application Test) (#48)

This test applies momentary ringing voltage to the terminal equipment and monitors resulting current flow to determine whether terminal equipment is connected to the port.

This test may cause some terminal equipment to ring briefly during daily maintenance. If this ringing disturbs the customer or the terminal equipment, you can disable it via the Tests field on the **change station** form. However, on some software releases Tests #6, 7, 161, and 35 will also be disabled

Table 9-19. TEST #48 Station Present Test

Error Code	Test Result	Description/ Recommendation
	ABORT	Could not allocate the necessary system resources to run this test. 1. Retry the command at 1-minute intervals a maximum of 5 times. 2. If the test continues to abort, escalate the problem.
1000	ABORT	System resources required to run this test are not available. The port may be busy with a valid call. Use the **display port UUCSSpp** command to determine the station extension. Use the **status station** command to determine the service state of the port. If the service state indicates that the port is in use, then the port is unavailable for certain tests. (Refer to Chapter 8, "Maintenance Commands", for a description of all possible states.) You must wait until the port is idle before retesting. 1. If the port status is idle, then retry the command at 1-minute intervals a maximum of 5 times. 2. If the test continues to abort, escalate the problem.

Continued on next page

Table 9-19. TEST #48 Station Present Test — *Continued*

Error Code	Test Result	Description/ Recommendation
1004	ABORT	The port was seized by a valid call during the test. The test has been aborted. Use the **display port UUCSSpp** command to determine the station extension. Use **status station** to determine the service state of the port. If the service state indicates that the port is in use, then the port is unavailable for certain tests. (Refer to Chapter 8, "Maintenance Commands", for a description of all possible states.) You must wait until the port is idle before retesting. 1. Retry the command at 1-minute intervals a maximum of 5 times. 2. If the test continues to abort and the port is not in use, escalate the problem.
1005	ABORT	This condition indicates that the test is not applicable when the analog port is used in combination with a CP9530 curdles set. This error can be ignored.
1008	ABORT	The port is the system's Music-on-Hold port and it is currently off-hook, which is its usual condition.
1008	ABORT	Could not allocate a ringing circuit. Either all the ringing circuits are in use or the ringing generator is defective or it is not wired correctly. 1. Retry the command at 1-minute intervals a maximum of 5 times. 2. If the test continues to abort, look for RING-GEN errors in the Error Log. If an ABORT 1008 occurs for this test on other circuit packs as well, then the ringing generator may be defective or is not wired correctly (see errors for RING-GEN). If it doesn't occur on other ports, then all four ring phases are in use.
1018	ABORT	Test disabled via administration. To enable the test for a particular analog station, enter **change station** extension and set the `Test?` field on the Station Form to `y`.

Continued on next page

Table 9-19. TEST #48 Station Present Test — *Continued*

Error Code	Test Result	Description/ Recommendation
2000	ABORT	Response to the test request was not received within the allowable time period.
2100	ABORT	Could not allocate necessary system resources to run this test. 1. Retry the command at 1-minute intervals a maximum of 5 times. 2. If the test continues to abort, escalate the problem.
	FAIL	The terminal equipment is not connected to the circuit pack. Some terminal equipment such as modems may fail even when connected properly. 1. The set may be defective. Check it and replace if necessary. 2. Check all of the wiring between the station equipment and the switch. Then run the test again. 3. If the test fails again, look for RING-GEN errors in the Error Log. If present, refer to the RING-GEN section. If no RING-GEN errors are present, then disable the test using the **change station** extension command and entering ‘‘n’’ for the Test field. Note that this action will also disable Tests #6, 7, 161, and 35 on this port.
	PASS	The station is connected properly to the switch. This test may also pass if no terminal equipment is connected and the terminal is located very far from the switch. User-reported troubles on this port should be investigated by using other port tests, by examining station wiring, or by examining the station.

Loop Around Test (#161)

Each Analog port consists of:

— A Network Processing Element (NPE) for port connectivity and gain, and conferencing functionality

— A codec which converts the digital signals of the TDM Bus to analog signals

— A battery feed chip which provides power to the telephone set for signaling, dial pulsing, transmission, and balance

This test is designed to check the on-board transmission capabilities of the NPE, the codec, and the battery feed chip of the analog port. A Tone Detector and a Tone Generator talk and listen on the same pair of time slots as the Analog Port. The Analog Port is then instructed to go into loop around mode (see Figure 9-1 below). The test passes if the signal measured by the Tone Detector is within acceptable limits.

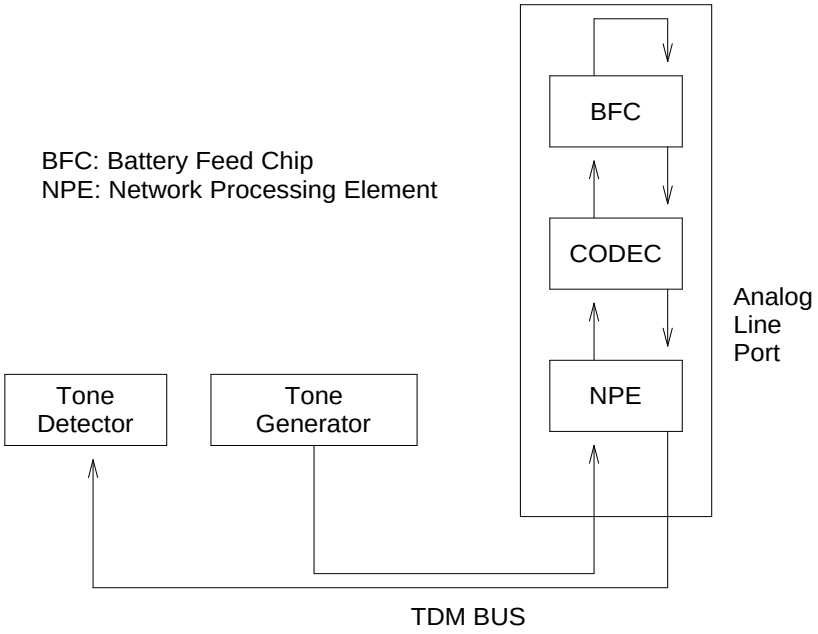

Figure 9-1. Analog Loop Around Test

Table 9-20. TEST #161 Loop Around Test

Error Code	Test Result	Description/ Recommendation
	ABORT	Could not allocate the necessary system resources to run this test. 1. Retry the command at 1-minute intervals a maximum of 5 times. 2. If the test continues to abort, escalate the problem.
1000	ABORT	System resources required to run this test are not available. The port may be busy with a valid call. Use the **display port UUCSSpp** command to determine the station extension. Use the **status station** command to determine the service state of the port. If the service state indicates that the port is in use, then the port is unavailable for certain tests. (Refer to Chapter 8, "Maintenance Commands", for a description of all possible states.) You must wait until the port is idle before retesting. 1. If the port status is idle, then retry the command at 1-minute intervals a maximum of 5 times. 2. If the test continues to abort, escalate the problem.
1002	ABORT	The system could not allocate time slots for the test. The system may be under heavy traffic conditions or it may have time slots out-of-service due to TDM-BUS errors. Refer to TDM-BUS (TDM Bus) Maintenance documentation to diagnose any active TDM-BUS errors. 1. If system has no TDM-BUS errors and is not handling heavy traffic, repeat test at 1-minute intervals a maximum of 5 times. 2. If the test continues to abort, escalate the problem.

Continued on next page

Table 9-20. TEST #161 Loop Around Test — *Continued*

Error Code	Test Result	Description/ Recommendation
1003	ABORT	The system could not allocate a tone receiver for the test. The system may be oversized for the number of Tone Detectors present or some Tone Detectors may be out-of-service. 1. Look for TTR-LEV errors in the Error Log. If present, refer to the TTR-LEV (TTR Level) Maintenance documentation. 2. Look for TONE-PT errors in the Error Log. If present, refer to the TONE-PT (Tone Generator) Maintenance documentation. 3. If neither condition exists, retry the test at 1-minute intervals a maximum of 5 times. 4. If the test continues to abort, escalate the problem.
1004	ABORT	The port was seized by a valid call during the test. The test has been aborted. Use the **display port UUCSSpp** command to determine the station extension. Use the **status station** command to determine the service state of the port. If the service state indicates that the port is in use, then the port is unavailable for certain tests. (Refer to Chapter 8, "Maintenance Commands", for a description of all possible states.) You must wait until the port is idle before retesting. 1. Retry the command at 1-minute intervals a maximum of 5 times. 2. If the test continues to abort and the port is not in use, escalate the problem.
1005	ABORT	This test is not run on ports administered as External Alert, Announcement or combined modem pool ports. This error can be ignored.
1018	ABORT	Test disabled via administration. To enable the test for a particular station, enter **change station** extension and set the `Test?` field on the Station Form to `y`.

Continued on next page

Table 9-20. TEST #161 Loop Around Test — *Continued*

Error Code	Test Result	Description/ Recommendation
2000	ABORT	Response to the test request was not received within the allowable time period.
2100	ABORT	Could not allocate the necessary system resources to run this test. 1. Retry the command at 1-minute intervals a maximum of 5 times. 2. If the test continues to abort, escalate the problem.
	FAIL	The reflective Loop Around Test failed. This will cause noisy or unreliable connections or other users calling this port may hear an echo. 1. Replace the circuit pack.
	PASS	The port is able to provide an analog transmission path to the station equipment. User-reported troubles on this port should be investigated by using other port tests, by examining station wiring, or by examining the station.

ANL-BD (Analog Line Circuit Pack)

MO Name in Alarm Log	Alarm Level	Initial Command To Run (a)	Full Name Of MO
ANL-BD	MIN	test board UUCSS sh	8-Port Analog Line Circuit Pack
ANL-BD	WRN	test board UUCSS sh	8-Port Analog Line Circuit Pack
ANL-BD	MIN	test board UUCSS sh	8-Port Neon Analog Line Circuit Pack
ANL-BD	WRN	test board UUCSS sh	8-Port Neon Analog Line Circuit Pack
ANL-BD	MIN	test board UUCSS sh	16-Port Neon Analog Line Circuit Pack
ANL-BD	WRN	test board UUCSS sh	16-Port Neon Analog Line Circuit Pack

a. UU is the universal cabinet number (1 for PPN, 2 - 44 for EPNs). C is the carrier designation (A, B, C, D, or E). SS is the number of the slot in which the circuit pack resides (01 to 21).

Refer to XXX-BD (Common Port Circuit Pack) Maintenance documentation for circuit pack level errors. See also ANL-LINE (8-Port Analog Line), ANL-NE-L (8-Port Neon Analog Line), and ANL-16-L (16-Port Neon Analog Line) Maintenance documentation for related line information.

ANL-LINE, ANL-NE-L (8-Port Analog Line)

MO Name As It Appears In Alarm Log	Alarm Level	Initial System Technician Command To Run (a)	Full Name of MO
ANL-LINE	MIN	test port UUCSSpp l	8-Port Analog Line
ANL-LINE	WRN	test port UUCSSpp sh	8-Port Analog Line
ANL-NE-L	MIN	test port UUCSSpp l	8-Port Neon Analog Line
ANL-NE-L	WRN	test port UUCSSpp sh	8-Port Neon Analog Line

a. UU is the universal cabinet number (1 for PPN, 2 -44 for EPNs). C is the carrier designation (A, B, C, D, or E). SS is the number of the slot in which the circuit pack resides (01 to 21). pp is the two digit port number (01, 02, ...).

The 8-port Analog Line circuit packs,

TN712 TN467 [G3r V2] TN411 [G3rV2]

TN742 TN443 [G3r V2]

TN769 TN443 [G3r V2]

each provide eight ports for single-line, on or off-premises analog endpoints such as analog voice terminals, queue warning level lamps, recorded announcements, dictation machines, PAGEPAC. paging equipment, external alerting devices, modems, facsimile machines and AUDIX voice ports. Only the TN769 supports a neon message waiting lamp. [1]

Test #48 may cause some terminal equipment to ring briefly during daily maintenance, which may disturb the customer or the terminal equipment. Test #47 may cause a false alarm when the port is connected to certain off-premises equipment, non-voice terminal equipment, or loop equipment. In either case, the tests can be disabled by entering **n** in the ‘‘Tests’’ field on the **change station <extension>** form. Be aware that this will disable Tests 6, 35, 47 and 48.

No maintenance of the terminal connected to the 8-Port Analog Line circuit pack or 8-Port Neon Analog Line circuit pack is performed, except to determine whether or not the terminal is connected. Failures of the common ringing application circuitry and the neon message waiting lamp power (ANL-NE-L only) are reported as errors 1281 and 1793 against XXX-BD (Common Port Circuit Pack).

1. PAGEPAC is a registered trademark of Harris Corporation, Dracon Division

Hardware Error Log Entries and Test to Clear Values

8-Port Analog Line Error Log Entries

Error Type	Aux Data	Associated Test	Alarm Level	On/Off Board	Test to Clear Value
0*	0	Any	Any	Any	test port UUCSSpp sh r 1
1 (a)	40960 40977 40975	None			
15 (b)	Any	Audits and Updates Test (#36)			
18	0	busy-out station *extension*	WARNING	OFF	release station *extension*
130 (c)		None	WARNING	ON	test port UUCSSpp sh
257 (d)		Station Present Test (#48)	WARNING	OFF	test port UUCSSpp sh r 3
513		Battery Feed Test (#35)	MIN/WRN**	ON	test port UUCSSpp sh r 2
769 (e)		Loop Around and Conference Test (#47)			test port UUCSSpp l r 3
1025		NPE Crosstalk Test (#6)	MIN/WRN**	ON	test port UUCSSpp l r 3
1281 (f)					
1793 (f)					

* Run the Short Test Sequence first. If all tests pass, run the Long Test Sequence. Refer to the appropriate test description and follow the recommended procedures.

† Minor alarms on this MO may be downgraded to Warning alarms based on the values used in the **set options** command.

Notes:

a. These are in-line errors that can only be resolved over time.

- 40960 Indicates that too many simultaneous incoming ringing attempts were made on this board. Only 4 ports on a board may ring simultaneously. A 5th incoming call will cause an inline error from the board.
- 40975 indicates that the terminal equipment was on-hook when ring-tip was detected during ringing. This usually indicates a failure in the terminal equipment or the type of terminal has a low ringer

impedance. Call the terminal equipment and verify that the terminal rings. If the terminal doesn't ring, then replace it. Otherwise, issue the **test port UUCSSpp** command, and follow the procedure for Test #48.

- 40977 indicates that no terminal equipment was connected when ringing was attempted. Run the short test via the **test port UUCSSpp** command, and follow the procedure for the results of Test #48.

b. This is a software audit error that does not indicate any hardware malfunction. Run Short Test Sequence and investigate errors (if any).

c. This error type indicates that the circuit pack has been removed or has been insane for more than 11-minutes. To clear the error, reinsert or replace the circuit pack.

d. Test #48 may cause some terminal equipment to ring briefly during daily maintenance. If this ringing is disturbing the customer or the terminal equipment, it should be disabled via the **change station** extension command. However, on some releases of the software, this will disable Tests #6, 47, and 35 as well as Test #48.

e. Test #47 may cause a false alarm when the port is connected to off-premises equipment, some non-voice terminal equipment, and some loop equipment. If this causes a false alarm, then disable the test by changing the Tests field of the **change station** command to ''no.''

f. Refer to XXX-BD (Common Port Circuit Pack) Maintenance documentation.

System Technician-Demanded Tests: Descriptions and Error Codes

Always investigate tests in the order presented in the table below when inspecting errors in the system. By clearing error codes associated with the *Battery Feed Test*, for example, you may also clear errors generated from other tests in the testing sequence.

Order of Investigation	Short Test Sequence	LongTest Sequence	D/ND*
Battery Feed Test (#35)	X	X	ND
Station Present Test (#48)	X	X	ND
NPE Crosstalk Test (#6)		X	ND
Loop Around and Conference Test (#47)		X	ND
Station Status and Translation Audits and Updates Test (#36)	X	X	ND

* D = Destructive; ND = Nondestructive

NPE Crosstalk Test (#6)

One or more Network Processing Elements (NPEs) reside on each circuit pack with a TDM Bus interface. The NPE controls port connectivity and gain, and provides conferencing functions on a per-port basis. The NPE Crosstalk Test verifies that this port's NPE channel talks on the selected time slot and never crosses over to time slots reserved for other connections. If the NPE is not working correctly, one-way and noisy connections may be observed. This test is usually only part of a port's Long Test Sequence and takes about 20 to 30 seconds to complete

Table 9-21. TEST #6 NPE Crosstalk Test

Error Code	Test Result	Description/ Recommendation
1000	ABORT	System resources required to run this test are not available. The port may be busy with a valid call. This result is also reported for the system's Music-on-Hold port when it is off-hook, which it usually is. 1. Enter **display port UUCSSpp** to determine the station's extension. Enter **status station** extension to determine the service state of the port. If the port is in use, it will be unavailable for certain tests. (Refer to Chapter 8, "Maintenance Commands", for a description of service states.) Wait until the port is idle before retesting. 2. When the port is idle, retry the command at 1-minute intervals up to 5 times. 3. If the test continues to abort, escalate the problem.
1001	ABORT	Could not allocate the necessary system resources to run this test. 1. Retry the command at 1-minute intervals a maximum of 5 times. 2. If the test continues to abort, escalate the problem.

Continued on next page

Table 9-21. TEST #6 NPE Crosstalk Test — *Continued*

Error Code	Test Result	Description/ Recommendation
1002	ABORT	The system could not allocate time slots for the test. The system may be under heavy traffic conditions or it may have time slots out-of-service due to TDM-BUS errors. Refer to TDM-BUS (TDM Bus) Maintenance documentation to diagnose any active TDM-BUS errors. 1. If system has no TDM-BUS errors and is not handling heavy traffic, repeat test at 1-minute intervals a maximum of 5 times. 2. If the test continues to abort, escalate the problem.
1003	ABORT	The system could not allocate a tone receiver for the test. The system may be oversized for the number of Tone Detectors present or some Tone Detectors may be out-of-service. 1. Look for TTR-LEV errors in the Error Log. If present, refer to TTR-LEV (TTR Level) Maintenance documentation. 2. Look for TONE-PT errors in the Error Log. If present, refer to TONE-PT (Tone Generator) Maintenance documentation. 3. If neither condition exists, retry the test at 1-minute intervals a maximum of 5 times. 4. If the test continues to abort, escalate the problem.
1004	ABORT	The port was seized by a valid call during the test. The test has been aborted. Use the **display port UUCSSpp** command to determine the station extension. Use the **status station** command to determine the service state of the port. If the service state indicates that the port is in use, then the port is unavailable for certain tests. (Refer to Chapter 8, "Maintenance Commands", for a description of all possible states.) You must wait until the port is idle before retesting. 1. Retry the command at 1-minute intervals a maximum of 5 times. 2. If the test continues to abort and the port is not in use, escalate the problem.

Continued on next page

Table 9-21. TEST #6 NPE Crosstalk Test — *Continued*

Error Code	Test Result	Description/ Recommendation
1005	ABORT	This code indicates that this test is not applicable in the current configuration. This code will result under either of the following conditions: 1. The analog port is used in a combined modem pool. 2. The circuit pack is one of the following: — TN742 vintages 13,14 and 15 — TN769 vintages 3,4 and 5
1018	ABORT	Test disabled via administration. To enable the test for a particular station, enter **change station** extension and set the `Test?` field on the Station Form to `y`.
1020	ABORT	The test did not run due to a previously existing error on the specific port or a more general circuit pack error. 1. Examine Error Log for existing errors against this port or the circuit pack and attempt to diagnose the previously existing error.
2000	ABORT	Response to the test request was not received within the allowable time period.
2100	ABORT	Could not allocate the necessary system resources to run this test. 1. Retry the command at 1-minute intervals a maximum of 5 times. 2. If the test continues to abort, escalate the problem.

Continued on next page

Table 9-21. TEST #6 NPE Crosstalk Test — *Continued*

Error Code	Test Result	Description/ Recommendation
Any	FAIL	The NPE of the tested port was found to be transmitting in error. This will cause noisy and unreliable connections. 1. Replace the circuit pack.
	PASS	The port is correctly using its allocated time slots. User-reported troubles on this port should be investigated by using other port tests, by examining station wiring, by examining the station, and by ensuring that the terminal is correctly translated as off-premises or on-premises. **NOTE:** This test always passes for circuit packs TN712 prior to vintage 14 and TN742 prior to vintage 6.

Battery Feed Test (also called Port Diagnostic Test) (#35)

The battery feed chip provides power to the telephone equipment, signaling, rotary dial pulsing, transmission, and balance. This test checks the signaling and switchhook capabilities of the battery feed chip by terminating the port, applying battery, and trying to detect a current.

Table 9-22. TEST #35 Battery Feed Test Results

Error Code	Test Result	Description/ Recommendation
	ABORT	Could not allocate the necessary system resources to run this test. 1. Retry the command at 1-minute intervals a maximum of 5 times. 2. If the test continues to abort, escalate the problem.
1000	ABORT	System resources required to run this test are not available. The port may be busy with a valid call. This result is also reported for the system's Music-on-Hold port when it is off-hook, which it usually is. 1. Enter **display port UUCSSpp** to determine the station's extension. Enter **status station** extension to determine the service state of the port. If the port is in use, it will be unavailable for certain tests. (Refer to Chapter 8, "Maintenance Commands", for a description of service states.) Wait until the port is idle before retesting. 2. When the port is idle, retry the command at 1-minute intervals up to 5 times. 3. If the test continues to abort, escalate the problem.

Continued on next page

Table 9-22. TEST #35 Battery Feed Test Results — *Continued*

Error Code	Test Result	Description/ Recommendation
1004	ABORT	System resources required to run this test are not available. The port may be busy with a valid call. Use the **display port UUCSSpp** command to determine the station extension. Use the **status station** command to determine the service state of the port. If the service state indicates that the port is in use, then the port is unavailable for certain tests. (Refer to Chapter 8, "Maintenance Commands", for a full description of all possible states.) You must wait until the port is idle before retesting. 1. Retry the command at 1-minute intervals a maximum of 5 times. 2. If the test continues to abort and the port is not in use, escalate the problem.
1005	ABORT	This code indicates that this test is not applicable in the current configuration. This code results under either of the following conditions: 1. The analog port is used in a combined modem pool. 2. The circuit pack is one of the following: — TN742 vintages 13,14 and 15 — TN769 vintages 3,4 and 5
1018	ABORT	Test disabled via administration. To enable the test for a particular station, enter **change station** extension and set the `Test?` field on the Station Form to `y`.
1392	ABORT	This port is currently a TTI port and the test will not execute on it. 1. Verify that the port is a TTI port using either the **display port** command (the display shows that the port is a TTI port) or the **list config** command (the display shows a `t` for the port). 2. If either **list config** or **display port** indicate that the port is *not* a TTI port, escalate the problem. If both commands indicate that the port is a TTI port, the abort is correct for the test, and no action is necessary.

Continued on next page

Table 9-22. TEST #35 Battery Feed Test Results — *Continued*

Error Code	Test Result	Description/ Recommendation
2000	ABORT	Response to the test request was not received within the allowable time period.
2100	ABORT	Could not allocate the necessary system resources to run this test. 1. Retry the command at 1-minute intervals a maximum of 5 times. 2. If the test continues to abort, escalate the problem.
	FAIL	The port's battery feed chip is unable to supply sufficient power to the terminal equipment. This may occur when the test is performed at the same time that the terminal equipment goes off-hook. 1. Use **status station** to determine when the port is available for testing. When the port becomes available for testing, retry the command at 1-minute intervals a minimum of five times. 2. If the test continues to fail, replace the board. 3. If the test continues to fail, escalate the problem.
	PASS	The port's battery feed chip is able to provide power to the station equipment to detect on-/off-hook. However, the battery feed chip may still be unable to provide power for touch-tones. If tones are heard when buttons are pressed, then the battery feed chip is functioning correctly; otherwise, replace the circuit pack because this port is defective. User-reported troubles on this port should be investigated by using other port tests, by examining station wiring, by examining the station, and by ensuring that the terminal is correctly translated as off-premises or on-premises. **NOTE:** This test always passes for circuit packs TN712 prior to vintage 14 and TN742 prior to vintage 6.

Station Status and Translation Audits and Updates Test (#36)

This test updates the analog port's message lamp state (if it has one) and translations (such as station type, dial type, network connection) with information kept in the software. The software is updated with the switchhook state reported by the port processor. When the ringer is in the off state, this test also turns off the station's ringer to prevent constant ringing caused by defective hardware.

Table 9-23. TEST #36 Station Status and Translation Audits and Updates Test

Error Code	Test Result	Description/ Recommendation
	ABORT	Could not allocate the necessary system resources to run this test.
1004	ABORT	System resources required to run this test are not available. The port may be busy with a valid call. Use the **display port UUCSSpp** command to determine the station extension. Use the **status station** command to determine the service state of the port. If the service state indicates that the port is in use, then the port is unavailable for certain tests. (Refer to Chapter 8, "Maintenance Commands", for a full description of all possible states.) You must wait until the port is idle before retesting. 1. Retry the command at 1-minute intervals a maximum of 5 times. 2. If the test continues to abort and the port is not in use, escalate the problem.
1005	ABORT	This code indicates that this test is not applicable in the current configuration. This code will result under either of the following conditions: 1. The analog port is used in a combined modem pool. 2. The circuit pack is one of the following: — TN742 vintages 13,14 and 15 — TN769 vintages 3,4 and 5

Continued on next page

Table 9-23. TEST #36 Station Status and Translation Audits and Updates Test — *Continued*

Error Code	Test Result	Description/ Recommendation
1006	ABORT	This port has been busied out by command or taken out-of-service by the failure of the NPE Crosstalk Test. 1. Look in the Error Log for Error Type 18 (port busied out) for this port. If this error is present, then release the port with the **release station** extension command and run the test again. 2. Look in the Error Log for Error Type 1025 (NPE Crosstalk Test failed) for this port. If this error is present, then investigate the errors associated with the NPE Crosstalk Test (#6) first. 3. If the test continues to abort, escalate the problem.
2000	ABORT	Response to the test request was not received within the allowable time period.
2100	ABORT	Could not allocate the necessary system resources to run this test. 1. Retry the command at 1-minute intervals a maximum of 5 times. 2. If the test continues to abort, escalate the problem.
1	FAIL	This does not indicate a hardware problem. The switchhook audit failed, and the other updates were not performed because of this failure. This condition may occur when the audit is performed at the same time that the terminal equipment goes off-hook. Use the **status station** command to determine when the port is available for testing. 1. When the port becomes available for testing, retry the command at 1-minute intervals a maximum of 5 times. 2. If the test continues to fail, escalate the problem.

Continued on next page

Table 9-23. TEST #36 Station Status and Translation Audits and Updates Test — *Continued*

Error Code	Test Result	Description/ Recommendation
5	FAIL	This does not indicate a hardware problem but may indicate an internal software error. The message waiting lamp update failed. The translation and ringer updates were not performed because of this failure.
7	FAIL	The translation update failed. The ringer update was not performed because of this failure. This does not indicate a hardware problem but may be an internal software error.
8	FAIL	This does not indicate a hardware problem but may be an internal software error. The ringer update failed. 1. Retry the command at 1-minute intervals a maximum of 5 times. 2. If the test continues to fail, escalate the problem.
	PASS	The software and the port processor have the same status. User-reported troubles on this port should be investigated by using other port tests, by examining station wiring, by examining the station, and by ensuring that the terminal is correctly translated as off-premises or on-premises. **NOTE:** This test always passes for circuit packs TN712 prior to vintage 14 and TN742 prior to vintage 6.

Loop Around and Conference Test (#47)

Each Analog Port consists of

- A Network Processing Element (NPE) for port connectivity and gain, and conferencing functionality
- A codec which converts the digital signals of the TDM Bus to analog signals
- A battery feed chip which provides power to the telephone set for signaling, dial pulsing, transmission, and balance.

This test is designed to check the on-board transmission capabilities of the NPE, the codec, and the battery feed chip of the Analog Port. A Tone Detector and a Tone Generator talk and listen on the same pair of time slots as the Analog Port. The Analog Port is then instructed to go into loop around mode (see Figure 9-2 below). The test passes if the signal measured by the Tone Detector is within acceptable limits.

The Conference Circuit Test verifies that the NPE channel for the port being tested can correctly perform the conferencing function. Test #47 also tests the operation of the port conference circuits in the NPE for three and four parties. In addition, a test is run to measure noise. The NPE is instructed to listen to several different tones and conference the tones together. The resulting signal is then measured by a Tone Detector port. If the level of the tone is within a certain range, the test passes.

The noise test is performed by filtering out the tone, and then measuring inherent port noise.

NOTE:
This Loop Around Test is sensitive to the length of the loop, the equipment in the loop, or the equipment terminating the loop, such as off-premises stations. If this test is causing a false alarm, then disable the test by changing the Tests field to ‘‘no’’ using the **change station** command for this station.

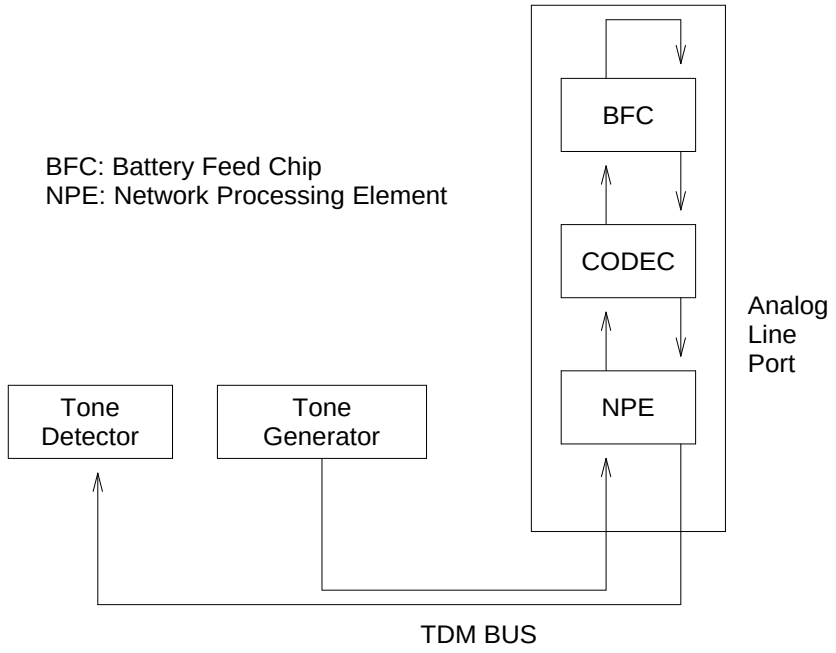

Figure 9-2. Analog Loop Around and Conference Test

Table 9-24. TEST #47 Loop Around and Conference Test

Error Code	Test Result	Description/ Recommendation
	ABORT	Could not allocate the necessary system resources to run this test. 1. Retry the command at 1-minute intervals a maximum of 5 times. 2. If the test continues to abort, escalate the problem.
1000	ABORT	System resources required to run this test are not available. The port may be busy with a valid call. This result is also reported for the system's Music-on-Hold port when it is off-hook, which it usually is. 1. Enter **display port UUCSSpp** to determine the station's extension. Enter **status station** extension to determine the service state of the port. If the port is in use, it will be unavailable for certain tests. (Refer to Chapter 8, "Maintenance Commands", for a description of service states.) Wait until the port is idle before retesting. 2. When the port is idle, retry the command at 1-minute intervals up to 5 times. 3. If the test continues to abort, escalate the problem.
1002	ABORT	The system could not allocate time slots for the test. The system may be under heavy traffic conditions or it may have time slots out-of-service due to TDM-BUS errors. Refer to TDM-BUS (TDM Bus) Maintenance documentation to diagnose any active TDM-BUS errors. 1. If system has no TDM-BUS errors and is not handling heavy traffic, repeat test at 1-minute intervals a maximum of 5 times. 2. If the test continues to abort, escalate the problem.

Continued on next page

Table 9-24. TEST #47 Loop Around and Conference Test — *Continued*

Error Code	Test Result	Description/ Recommendation
1003	ABORT	The system could not allocate a tone receiver for the test. The system may be oversized for the number of Tone Detectors present or some Tone Detectors may be out-of-service. 1. Look for TTR-LEV errors in the Error Log. If present, refer to TTR-LEV (TTR Level) Maintenance documentation. 2. Look for TONE-PT errors in the Error Log. If present, refer to TONE-PT (Tone Generator) Maintenance documentation. 3. If neither condition exists, retry the test at 1-minute intervals a maximum of 5 times. 4. If the test continues to abort, escalate the problem.
1004	ABORT	The port has been seized for a valid call during the conference or noise test. 1. If the circuit pack is a TN742 of vintage 10 or less, this test is not valid. Otherwise, proceed with step 2. 2. When the port is available for testing, retry the command at 1-minute intervals a maximum of 5 times. 3. If the test continues to abort and the port is not in use, escalate the problem.
1005	ABORT	This code indicates that this test is not applicable in the current configuration. This code will result under either of the following conditions: 1. The analog port is used in a combined modem pool. 2. The circuit pack is one of the following: — TN742 vintages 13,14 and 15 — TN769 vintages 3,4 and 5

Continued on next page

Table 9-24. TEST #47 Loop Around and Conference Test — *Continued*

Error Code	Test Result	Description/ Recommendation
1018	ABORT	Test disabled via administration. To enable the test for a particular station, enter **change station** extension and set the `Test?` field on the Station Form to `y`.
1392	ABORT	This port is currently a TTI port and the test will not execute on it. 1. Verify that the port is a TTI port using either the **display port** command (the display shows that the port is a TTI port) or the **list config** command (the display shows a `t` for the port). 2. If either **list config** or **display port** indicate that the port is *not* a TTI port, escalate the problem. If both commands indicate that the port is a TTI port, the abort is correct for the test, and no action is necessary.
2000	ABORT	Response to the test request was not received within the allowable time period.
2100	ABORT	Could not allocate the necessary system resources to run this test. 1. Retry the command at 1-minute intervals a maximum of 5 times. 2. If the test continues to abort, escalate the problem.

Continued on next page

Table 9-24. TEST #47 Loop Around and Conference Test — *Continued*

Error Code	Test Result	Description/ Recommendation
7	FAIL	The Conference Test or the Noise Test failed. This will cause noisy or unreliable connections or other users calling this port may hear an echo. 1. Disconnect the terminal equipment from the circuit pack at the cross-connect and run the test again. 2. If the test fails again, then replace the circuit pack and reconnect the terminal equipment. If however the test passes the second time, then the terminal equipment connected to the port affected the test results; in this case, if all other tests pass or abort, and the station is operating properly, ignore the results of test #47 Failures of Test #47 will not cause an alarm. If however other tests fail, then investigate those errors. User-reported troubles with this port should be investigated by using other port tests, by examining station wiring, and by examining the station to ensure that it is correctly translated as off-premises or on-premises.

Continued on next page

Table 9-24. TEST #47 Loop Around and Conference Test — *Continued*

Error Code	Test Result	Description/ Recommendation
13	FAIL	The reflective loop around with gain set to low and the 600-ohm balance failed. This will cause noisy or unreliable connections.
14	FAIL	The reflective loop around with gain set to high and the RC balance failed. This will cause noisy or unreliable connections.
15	FAIL	The non-reflective Loop Around Test failed. Other users calling this port may hear an echo. See the preceding procedure for a failure with Error Code 7. **NOTE:** If the Reflective Loop Around Test fails for all ports on a circuit pack, a -5 volt power problem is indicated. If a TN736 or TN752 power unit circuit pack is present, the 631DB AC power unit or the 676B DC power unit may be defective. (The 631DB DC power unit is used in a medium cabinet powered by an AC source. The 645B DC power source is used in a medium cabinet powered by a DC power source.) The system may contain either a TN736 or a TN752 power unit circuit pack OR a 631DB power unit, *but not both types of power units.* To investigate problems with a 631DB AC power source, refer to CARR-POW (Carrier Port Power Unit for AC-Powered Systems) Maintenance documentation. To investigate problems with a 645B DB power source, refer to CARR-POW (Carrier Port Power Unit for DC-Powered Systems) Maintenance documentation.

Continued on next page

Table 9-24. TEST #47 Loop Around and Conference Test — *Continued*

Error Code	Test Result	Description/ Recommendation
	PASS	The port is able to provide an analog transmission path to the station equipment. User-reported troubles on this port should be investigated by using other port tests, by examining station wiring, by examining the station, and by ensuring that the terminal is correctly translated as off-premises or on-premises. **NOTE:** This test always passes for circuit packs TN712 prior to vintage 14 and TN742 prior to vintage 6.

Station Present Test (also called Ringing Application Test) (#48)

This test provides a burst of ringing current to the terminal equipment and detects that current flows. This test is to ascertain whether or not terminal equipment is connected to the port.

This test may cause some terminal equipment to ring briefly during daily maintenance. If this ringing is disturbing the customer or the terminal equipment, it should be disabled using the Tests field of the station administration screen. However, on some releases of the software, this action will disable Tests #6, 47, and 35 as well as Test #48.

Table 9-25. TEST #48 Station Present Test

Error Code	Test Result	Description/ Recommendation
	ABORT	Could not allocate the necessary system resources to run this test. 1. Retry the command at 1-minute intervals a maximum of 5 times. 2. If the test continues to abort, escalate the problem.
1000	ABORT	System resources required to run this test are not available. The port may be busy with a valid call. This result is also reported for the system's Music-on-Hold port when it is off-hook, which it usually is. 1. Enter **display port UUCSSpp** to determine the station's extension. Enter **status station** extension to determine the service state of the port. If the port is in use, it will be unavailable for certain tests. (Refer to Chapter 8, "Maintenance Commands", for a description of service states.) Wait until the port is idle before retesting. 2. When the port is idle, retry the command at 1-minute intervals up to 5 times. 3. If the test continues to abort, escalate the problem.

Continued on next page

Table 9-25. TEST #48 Station Present Test — *Continued*

Error Code	Test Result	Description/ Recommendation
1004	ABORT	System resources required to run this test are not available. The port may be busy with a valid call. Use the **display port UUCSSpp** command to determine the station extension. Use the **status station** command to determine the service state of the port. If the service state indicates that the port is in use, then the port is unavailable for certain tests. (Refer to Chapter 8, "Maintenance Commands", for a full description of all possible states.) You must wait until the port is idle before retesting. 1. Retry the command at 1-minute intervals a maximum of 5 times. 2. If the test continues to abort and the port is not in use, escalate the problem.
1005	ABORT	This code indicates that this test is not applicable in the current configuration. This code will result under either of the following conditions: 1. The analog port is used in a combined modem pool. 2. The circuit pack is one of the following: — TN742 vintages 13,14 and 15 — TN769 vintages 3,4 and 5
1008	ABORT	Could not allocate a ringing circuit for one of the following reasons: (1) all the ringing circuits are in use, or (2) the ringing generator is defective, or (3) it is not wired correctly. 1. Retry the command at 1-minute intervals a maximum of 5 times. 2. If the test continues to abort, look for RING-GEN errors in the Error Log. If an ABORT 1008 occurs for Test #48 on other circuit packs as well, then the ringing generator may be defective or not wired correctly. If it does not occur on other ports, then that circuit pack is currently using all four ringing phases.
1018	ABORT	Test disabled via administration. To enable the test for a particular station, enter **change station** extension and set the `Test?` field on the Station Form to `y`.

Continued on next page

Table 9-25. TEST #48 Station Present Test — *Continued*

Error Code	Test Result	Description/ Recommendation
2000	ABORT	Response to the test request was not received within the allowable time period.
2100	ABORT	Could not allocate the necessary system resources to run this test. 1. Retry the command at 1-minute intervals a maximum of 5 times. 2. If the test continues to abort, escalate the problem.
	FAIL	The terminal equipment is not connected to the circuit pack or the ringing generator may have failed. Some terminal equipment such as modems may fail even when connected properly. 1. The set may be defective. Check it and replace if necessary. 2. Check all of the wiring between the station equipment and the switch. Then run the test again. 3. If the test fails again, look for RING-GEN errors in the Error Log. If present, refer to the RING-GEN section. If no RING-GEN errors are present, then disable the test using the **change station** extension command and entering ‘‘n’’ for the Test field. Note that this action will also disable Tests #6, 7, 161, and 35 on this port.
	PASS	The station is connected properly to the switch. This test may also pass if no terminal equipment is connected and the terminal is located very far from the switch. User-reported troubles on this port should be investigated by using other port tests, by examining station wiring, or by examining the station.

ANN-BD (Announcement Circuit Pack)

MO Name As It Appears In Alarm Log	Alarm Level	Initial System Technician Command To Run (a)	Full Name of MO
ANN-BD	MINOR	test board UUCSS l	Announcement Circuit Pack
ANN-BD	WARNING	test board UUCSS l	Announcement Circuit Pack

a. UU is the universal cabinet number (1 for PPN, 2 - 44 for EPNs). C is the carrier designation (A, B, C, D, or E). SS is the number of the slot in which the circuit pack resides (01 to 21).

The TN750 Announcement circuit pack digitally stores and plays back recorded announcements. Announcements are played back by call processing as part of a calling feature such as announcements on hunt group calls. The TN750 contains 16 announcement ports each of which can play any recorded announcement. The circuit pack also has one Data Line Circuit Port (port 17). for uploading and downloading announcement files to and from the system's disk and tape devices. For errors associated with port 17, refer to DAT-LINE (Data Line Circuit Port). For errors associated with ports 1-16 refer to ANN-PT (Announcement Port).

The Announcement circuit pack contains two processors. One, called the Angel, controls the overall circuit pack and communicates with the switch via the control channel on the TDM Bus. The second, called the Speech Processor, controls speech memory and announcements. Digital speech is converted from its TDM-bus form to an internal-storage form for recording and back again for playbacks. For this process, it uses a board-mounted 140AY device with 16 channels (1 for each Announcement Port).

NOTE:
TN750C is required if your system will have multiple announcement boards. To use multiple announcement boards, you must have G3V4 software, and at least one TN750C (up to ten are allowed). Only one TN750A/B may be present in the system when a TN750C is used. The announcements from a TN750A/B can be saved and restored to a TN750C — but once the announcements are recorded onto a TN750C, they are not backward compatible with the TN750A/B.

Essential Service Information

You should have an understanding of the following principles before attempting work on the TN750 Announcement circuit pack.

- The Announcement circuit pack retains all integrated announcements *as long as the circuit pack has power*. Announcements are preserved through a software reset (**reset board** command), but they are lost when the circuit pack is unseated. (Unseating is generally not recommended unless replacement is necessary.)
- Whenever new announcements are recorded on the circuit pack, save them on disk as soon as possible to ensure that they will not be lost due to a disruption. Periodic saves to tape provide further backup if the disk files are lost or corrupted. This is also accomplished when the entire disk is backed up.

  NOTE:
  Unlike translations, announcements are never saved automatically by the system. so you must do it manually.

- The **save announcements** command replaces the announcement files on disk or tape with those in Announcement circuit pack speech memory. Take care not to inadvertently destroy a valid file on tape or disk with this command.
- The **restore announcements** command replaces Announcement circuit pack speech memory with announcement files on the disk or tape. Take care not to inadvertently destroy valid announcements on the circuit pack by restoring from a device that does not contain a current announcement file.
- Whenever the Announcement circuit pack is replaced, you must re-record announcements or restore them from disk or tape. Otherwise, the circuit pack will be unavailable to call processing service.
- If the circuit pack's speech memory is corrupted, announcements should *not* be saved (for example, when the Announcement Checksum Test (#209) fails or announcements sound corrupted when played back). This can ruin a good announcement file on disk or tape, and potentially cause errors and alarms on any circuit pack to which the saved file is downloaded. If, however, the customer does not have a valid announcement file on tape or disk, You may wish to save announcements in an effort to try to retain those which are not corrupted.

Announcement Administration

A brief description of integrated announcement administration is given below to aid in troubleshooting the Announcement circuit pack and its ports. In many cases, it will be necessary to record, play back, delete, save or restore announcements as part of maintenance procedures. For a complete description of integrated announcement administration, refer to the following manuals:

- *DEFINITY Communications System Generic 3 V2 Implementation,* 555-230-653

- *DEFINITY Communications System Generic 3r Administration Quick Reference*, 555-230-661
- *DEFINITY Communications System Generic 1 and Generic 3 Voice Terminal Operations*, 555-230-701
- *DEFINITY Communications System Generic 3 V2 Traffic Reports*, 555-230-511

Announcement Session

The recording, playing back, and deleting of announcements is called an announcement session. The station used must have a class of service (COS) that includes console permissions. To enter an announcement session, go off-hook on the station and enter the Announcement Feature Access Code (FAC) administered on the Feature Access Codes form. You should now hear dial tone. Enter the extension of the announcement to be recorded, deleted, or played back. You should again hear dial tone. To record an announcement, press 1, record after the tone, and hang up when done. To play back an announcement, press 2. Announcements can also be played back by simply calling the announcement extension associated with them. To delete an announcement, press 3, and confirmation tone will be given if the delete was successful.

Saving and Restoring Announcements

Integrated announcements on the TN750 Announcement circuit pack can be uploaded to the system tape or disk with the **save announcements** command. Likewise, integrated announcements can be downloaded to the Announcement circuit pack with the **restore announcements** command. Both commands require a free System Port, an announcement data module administered on the Announcement circuit pack and, if saving to tape, a non-write protected tape cartridge in the tape drive. Typical announcement uploads or downloads take 30 to 45 minutes, depending on system traffic.

The system automatically attempts to download to the Announcement circuit pack 5 minutes after it is inserted. This automatic download procedure may be aborted or preempted by any of the following:

- An announcement is recorded within 10 minutes of circuit pack insertion.
- An announcement download is invoked sooner with the **restore announcements** command.
- An announcement data module is not administered or is busy.
- A System Access Port is not available.
- There is no tape is in the system when saving to tape.
- The tape or disk does not have a valid announcement file.

NOTE:
Unlike translations, announcements are not automatically saved during scheduled maintenance.

Precaution for TN750 (no suffix)

If the Announcement circuit pack number is TN750 with no suffix, it is susceptible to the following problem. Announcements can become corrupted when one executes the following sequence of events:

1. Fill the circuit pack with recorded announcements.
2. Delete the last few announcements recorded.
3. Re-record the announcements deleted.

When this happens, error type 0 is logged in the Error Log and the Announcement Checksum Test (#209) will fail. The TN750B does not have this problem, but it will not correct an announcement file that has been corrupted by a TN750. If the announcement file becomes corrupted, the only solution is to re-record all announcements via the following procedure:

1. Remove the announcement circuit pack.
2. Re-insert the announcement circuit pack.
3. Before the system automatically restores the announcement file from disk, record at least one announcement to prevent the automatic download. The rest of the announcements can be re-recorded at present or when time permits.
4. Execute **save announcements**.

Error Log Entries and Test to Clear Values

Table 9-26. Announcement Circuit Pack Error Log Entries

Error Type	Aux Data	Associated Test	Alarm Level	On/Off Board	Test to Clear Value
0*	0	Any	Any	Any	test board UUCSS sh r 1
1(a)	0	Circuit pack removed or SAKI Test (#53)	MINOR	ON	
2(n)		None			
14(b)	1-128	Announcement Checksum Test (#209)			
18	0	busy-out board UUCSS	WARNING	OFF	release board UUCSS
23(c)	0	None	WARNING	OFF	
125(d)		None	MINOR	ON	
217(m)	0	None	WARNING	OFF	
257	65535	Control Channel Test (#52)	MINOR	ON	test board UUCSS l r 20
257(e)	Any	None			
267(m)	0	None	WARNING	OFF	
513(f)	Any	None			
1025(g)	4363	NPE Audit Test (#50)			test board UUCSS l
1281(h)	17699	None			
1538(i)	Any	None	MINOR	ON	
1793		Angel-SP Handshake Test (#208)	MINOR	ON	test board UUCSS l r 3
	17680	In-line Error			
2049(j)(k)		Clock Match Inquiry Test (#212)	MINOR	ON	test board UUCSS sh r 3
	17674	In-line Error			

Continued on next page

Table 9-26. Announcement Circuit Pack Error Log Entries — *Continued*

Error Type	Aux Data	Associated Test	Alarm Level	On/Off Board	Test to Clear Value
2305		140AY Loop Around Test (#210)	MINOR	ON	test board UUCSS sh r 3
2561		Super Frame Match Inquiry Test (#211)	MINOR	ON	test board UUCSS sh r 3
	17676	In-line Error			
2817		Announcement Checksum Test (#209)	MINOR	ON	test board UUCSS sh r 3
	17682	In-line Error			
	17699(j)	In-line Error			
3840(l)	Any	None			
3999 (n)	Any	None			

* Run the Short Test Sequence first. If all tests pass, run the Long Test Sequence. Refer to the appropriate test description and follow the recommended procedures.

Notes:

a. This error indicates the circuit pack totally stopped functioning or it was physically removed from the system.

NOTE:
The alarm will be logged about 11 minutes after the circuit pack has been removed or when the SAKI Test (#53) fails.

If the circuit pack is not in the system, insert a circuit pack (in the same slot as the error indicates) to resolve this error. If the circuit pack is in the system and the red LED is on, refer to *Red LED without Associated Alarm* in Chapter 7, "LED Indicators".

b. This error is logged whenever the Announcement Checksum Test (#209) fails. The Aux Data indicates the identifying number of the first defective announcement found. This number corresponds to the announcement numbers on the announcement administration form. The extension associated with the announcement can be determined with the **display**

announcement command. This error always appears in conjunction with Error Type 2817. Follow the procedures for Error Type 2817 to troubleshoot Error Type 14.

c. The circuit pack has been logically administered but not physically installed. The alarm will be cleared when the circuit pack is installed.

d. A wrong circuit pack is inserted in the slot where this circuit pack is logically administered. To resolve this problem, either remove the wrong circuit pack and insert the logically administered circuit pack OR use the **change circuit-pack** command to readminister this slot to match the circuit pack inserted.

e. This error indicates transient communication problems with this circuit pack. This error is not service-affecting and no action is required.

f. This error, when reported with Aux Data in the range of 4352 to 4358, indicates the circuit pack has reported a hardware failure on the circuit pack. The circuit pack should be replaced.

WARNING:
Replacing the circuit pack will result in loss of integrated announcements. See Essential Service Information above.

g. This error is not service-affecting and no action is required.

h. The Speech Processor (SP) found one or more faulty memory locations in the speech main memory (SMM). Whenever this error is logged, error 2817 will also be logged (Note j), causing maintenance to run the Announcement Checksum Test (#209) to determine if the bad memory location is used by an announcement.

i. The hyperactive circuit pack is out-of-service and may exhibit one or more of the following symptoms:

   1. The tests run on the ports of this circuit pack are returning with a NO-BOARD.
   2. A busy-out/release of the circuit pack has no affect on test results.
   3. A **list configuration** command shows that the circuit pack and ports are properly installed.

   The system will try to restore the circuit pack within 15 minutes. If the error recurs after 15 minutes, then replace the circuit pack. (Refer to *Replacing Circuit Packs* in Chapter 5, "Responding to Alarms and Errors".)

j. This error is logged in conjunction with Error Type 1281, Aux Data 17699 (Note h). Since that error means that a defective speech memory location was found, the announcement checksum error is also logged, causing the Announcement Checksum Test (#209) to run. This test determines whether the defective memory location has corrupted any recorded

announcements. If the Checksum Test passes, the faulty memory location is not currently being used; the Speech Processor will then mark the location as faulty to prevent future announcements from using it.

NOTE:
As memory locations are marked faulty, the amount of available memory decreases, lowering the amount of announcement time available on the circuit pack.

k. It is possible for a marginal Tone-Clock circuit pack to cause this error against the ANN-BD without alarming the TONE-BD. Replacing the Tone-Clock circuit pack may clear up this error. See the FAIL case in the Clock Match Inquiry Test (#212).

l. This error is not service-affecting and no action is required.

m. Errors 217 and 267 indicate that there is more than one TN750 Announcement circuit pack inserted in the system. Remove the alarmed circuit pack.

n. Check the Class of Restriction (COR) administered for the Data Line extension assigned to the TN750 for uploading and downloading announcements. The extension can be found by using **list data-module**.

o. Error type 3999 indicates that the circuit pack sent a large number of control channel messages to the switch within a short period of time. If error type 1538 is also present, then the circuit pack was taken out-of-service due to hyperactivity. If error type 1538 is not present, then the circuit pack has not been taken out-of-service, but it has generated 50% of the messages necessary to be considered hyperactive. This may be completely normal during heavy traffic periods. However, if this error type is logged when the circuit pack is being lightly used, it may indicate a problem with the circuit pack or the equipment attached to it.

System Technician-Demanded Tests: Descriptions and Error Codes

Always investigate tests in the order presented in the table below when inspecting errors in the system. By clearing error codes associated with the *Control Channel Loop Around Test*, for example, you may also clear errors generated from other tests in the testing sequence.

Order of Investigation	Short Test Sequence	LongTest Sequence	D/ND*
Control Channel Loop Around Test (#52) †		X	ND
Angel-Speech Processor (SP) Handshake		X	ND
Test (#208)			
Clock Match Inquiry (#212)	X	X	ND
Super Frame Match Inquiry (#211)	X	X	ND
140AY Loop Around Test (#210)	X	X	ND
Announcement Checksum Test (#209)	X	X	ND
Network Processor Element (NPE) Audit			
Test (#50) †		X	ND
SAKI Test (#53) †		X	D

* D = Destructive; ND = Nondestructive

† For results of these tests, see the XXX-BD section.

Angel-Speech Processor Handshake Test (#208)

This test checks the integrity of the communication link between the two processors on the Announcement circuit pack.

CAUTION:
Failure of this test indicates that the Speech Processor is insane and results in the loss of all integrated announcements on the circuit pack.

Table 9-27. TEST #208 Angel-Speech Processor (SP) Handshake Test

Error Code	Test Result	Description/ Recommendation
2000	ABORT	Response to the test request was not received within the allowable time period. If Error Type 1538 is present in the Error Log, follow the maintenance strategy recommended for this Error Type.
2100	ABORT	Could not allocate the necessary system resources to run this test.
	ABORT	Internal System Error 1. Retry the command at 1-minute intervals a maximum of 5 times. 2. If the test continues to abort, escalate the problem.

Continued on next page

Table 9-27. TEST #208 Angel-Speech Processor (SP) Handshake Test — *Continued*

Error Code	Test Result	Description/ Recommendation
	FAIL	The circuit pack cannot be used. Announcement speech memory is cleared when this test fails. When the problem has been resolved, announcements must be re-recorded or downloaded to the circuit pack. Refer to *Essential Service Information* above. 1. Reset the circuit pack via the **reset board UUCSS** command and then run this test again. If the test continues to fail, replace the circuit pack. 2. If there are recurring alarms on this circuit pack caused by this test failing, replace the circuit pack *even if step 1 works.* **WARNING:** *Replacing the circuit pack will result in loss of integrated announcements. See Essential Service Information above.*
	PASS	The communications link between the two processors on the Announcement circuit pack is functioning properly. User-reported troubles on this circuit pack should be investigated using other circuit pack and port tests. Refer to ANN-PT (Announcement Port) Maintenance documentation for a description of the port tests.

Announcement Checksum Test (#209)

Associated with every recorded announcement is a checksum. In this test, the Speech Processor calculates a global checksum covering the entire announcements file and compares it to a stored one. If the global checksums are not consistent, then the maintenance system requests the SP to check each individual announcement's checksum.

If the comparison of any announcement's checksum fails, then the total number of defective announcements found is reported. The test failure is associated with an error type 14 in the Error Log. The aux data gives the identifying number of the first defective announcement found. This number and the extension assigned to the announcement are listed on the **display announcement** command.

Table 9-28. TEST #209 Announcement Checksum Test

Error Code	Test Result	Description/ Recommendation
1023	ABORT	There are no announcements currently recorded on the circuit pack.
1024	ABORT	This abort code indicates any of the following: ■ An announcement upload or download is in progress. ■ An announcement upload or download was requested while the test was running. ■ A recording session was in progress. ■ A recording session was initiated in while this test was running.

Continued on next page

Table 9-28. TEST #209 Announcement Checksum Test — *Continued*

Error Code	Test Result	Description/ Recommendation
		If an announcement upload or download is in progress, **status data-module** extension should show that the announcement data port (17) is connected to a Data Line Port that is part of a System Port, and the tape or disk should be active. (To determine the extension of the announcement data module, use the **list data-module** command.) See also *Locked Announcement Circuit Pack* at the end of this table. 1. Wait until the cause of the abort finishes and run the test again. Upload or download can take up to 45 minutes to complete. A recording session is finished as soon as the station that was making the recording is placed on-hook. 2. If the test continues to abort, and a recording session or upload/download is not in progress, escalate the problem.
2000	ABORT	Response to the test request was not received within the allowable time period. If Error Type 1538 is present in the Error Log, follow the maintenance strategy recommended for this Error Type.
2100	ABORT	Could not allocate the necessary system resources to run this test.
	ABORT	Internal System Error 1. Retry the command at 1-minute intervals a maximum of 5 times. 2. If the test continues to abort, escalate the problem.

Continued on next page

Table 9-28. TEST #209 Announcement Checksum Test — *Continued*

Error Code	Test Result	Description/ Recommendation
1-256	FAIL	The error code for this result gives the total number of defective announcements found in speech memory. If the circuit pack is a TN750 with no suffix, see *Precaution for TN750 (no suffix)* in the introduction to the ANN-BD section. **NOTE:** Since announcements are stored digitally, it is possible for the Announcement Checksum Test to fail and still have all announcements sound uncorrupted. When an individual announcement fails the Checksum Test, always listen to the announcement before taking any action. If the announcement sounds corrupted, then re-record it or delete it. An announcement can be played back by dialing the extension associated with the announcement number. Use the **display announcement** command to find identifying numbers and extensions od announcements. 1. Look at the aux data for error type 14 in the Error Log to determine the number of the first defective announcement encountered. Play back the announcement and re-record or delete it if it sounds corrupted. If the FAIL code for this test was greater than 1, there is more than one corrupted announcement. To get the numbers of the others, you must re-record or delete the first one and then rerun this test. 2. If after deleting and re-recording all defective announcements, the checksum test still fails, then reset the circuit pack using the **reset board UUCSS** command and run this test again. 3. If the test continues to fail, reseat the circuit pack and restore announcements (this can take up to 40 minutes). Any announcements recorded since the last **save announcements** will be lost, and must be re-recorded. Then run this test again. 4. If the test continues to fail, replace the circuit pack. **WARNING:** *Replacing the circuit pack will result in loss of integrated announcements. See Essential Service Information above.*

Table 9-28. TEST #209 Announcement Checksum Test — *Continued*

Error Code	Test Result	Description/ Recommendation
	PASS	All recorded announcements checksum correctly, indicating that the speech main memory is functioning properly. User-reported troubles on this circuit pack should be investigated using other circuit pack and port tests. Refer to ANN-PT (Announcement Port) Maintenance documentation for a description of the port tests.

Locked Announcement Circuit Pack

The Announcement circuit pack can exhibit a rare "locked" condition that renders two of its ports unusable by software. One of these ports is the record port, thus preventing any recording of announcements or execution of the **save/restore announcements** commands. Software does not have any way of detecting this condition and will attempt to use the ports.

When the circuit pack is in this state, the following symptoms will be observed:

- When attempting to record an announcement, you will hear the proper record tone, but the announcement will not record. This will not be apparent until an attempt is made to play the announcement back.
- Performing a **test board long** will yield the following abort codes:
  - Test #206 aborts on ports 1 and 9 with code 1024.
  - Test #205 aborts on ports 1 and 9 with code 2000.
  - Tests #209 and #210 abort with code 1024.
- The **save/restore announcements** commands will time out with: `Error encountered, can't complete request`

The Announcement circuit pack lock-up can be cleared remotely by performing a soft reset to the circuit pack with the following sequence of commands:

1. **busy-out board UUCSS** (this command will drop all calls to the Announcement circuit pack)
2. **reset board UUCSS**
3. **release board UUCSS**

140AY Loop Around Test (#210)

This test checks the integrity of the record channel on the Announcement circuit pack (Announcement Port 1). The main function of the 140AY device is to accept Pulse Code Modulation (PCM)/Adaptive Differential Pulse Code Modulation (ADPCM) samples and compress/expand the samples using ADPCM. This test connects a Tone Generator to one port (Announcement Port 1, the recording port), and a Tone Detector to another port (Announcement Port 9). A tone is generated by the Tone Generator on the first port and looped through the 140AY device to the second port. The Tone Detector then responds with a tone present/absent message. The 140AY Loop Around Test is repeated at three different speech compression rates.

Since this test involves sending a tone through two different ports, the Playback Speech Memory Array (PSMA) Test (#206) [see ANN-PT (Announcement Port) Maintenance documentation for a description of this test] is run on the two ports first to make sure that they are working properly.

Table 9-29. TEST #210 140AY Loop Around Test

Error Code	Test Result	Description/ Recommendation
1-3	ABORT	Response to the test request was not received within the allowable time period. The error code indicates at which speech compression rate the test aborted (1 being the first rate tested, 3 being the last). 1. Retry the command at 1-minute intervals a maximum of 5 times. 2. If the test continues to abort, escalate the problem.
10	ABORT	The Playback Speech Memory Array (PSMA) Test (#206) failed on Announcement Port 1.
90	ABORT	The Playback Speech Memory Array (PSMA) Test (#206) failed on Announcement Port 9. 1. Refer to ANN-PT Maintenance documentation, Test #206.
1000	ABORT	System resources required to run this test are not available. This test needs Announcement Ports 1 and 9 to run. One of the ports may be in use on a valid call. 1. Retry the command at 1-minute intervals a maximum of 5 times. 2. If the test continues to abort and Ports 1 and 9 are not in use, escalate the problem.

Continued on next page

Table 9-29. TEST #210 140AY Loop Around Test — *Continued*

Error Code	Test Result	Description/ Recommendation
1002	ABORT	The system could not allocate time slots for the test. The system may be under heavy traffic conditions or it may have time slots out-of-service due to TDM-BUS errors. Refer to TDM-BUS (TDM Bus) Maintenance documentation to diagnose any active TDM-BUS errors. 1. If system has no TDM-BUS errors and is not handling heavy traffic, repeat test at 1-minute intervals a maximum of 5 times. 2. If the test continues to abort, escalate the problem.
1003	ABORT	The system could not allocate a tone receiver for the test. The system may be oversized for the number of Tone Detectors present or some Tone Detectors may be out-of-service. 1. Look for TTR-LEV errors in the Error Log. If present, refer to the TTR-LEV (TTR Level) Maintenance documentation. 2. Look for TONE-PT errors in the Error Log. If present, refer to the TONE-PT (Tone Generator) Maintenance documentation. 3. If neither condition exists, retry the test at 1-minute intervals a maximum of 5 times. 4. If the test continues to abort, escalate the problem.
1007	ABORT	The Announcement circuit pack thinks that Port 1 or Port 9 is busy. 1. Retry the command at 1-minute intervals a maximum of 5 times. 2. If the test continues to abort, follow the Announcement Port maintenance procedures for Ports 1 and 9. 3. If the Announcement Ports pass all their tests, escalate the problem.

Continued on next page

Table 9-29. TEST #210 140AY Loop Around Test — *Continued*

Error Code	Test Result	Description/ Recommendation
1024	ABORT	Announcement circuit pack blocked the test because an announcement download is in progress. If an announcement download is in progress, a **status data-module** announcement data extension command should show that the announcement data port is connected to a Data Line Port that is part of a System Access Port, and the tape drive should be active (to determine the extension of the announcement data module, use the **list data-module** command). See also *Locked Announcement Circuit Pack* at the end of the table for Test #209. 1. Wait until download is finished (can take up to 45 minutes), and then run the test again. 2. If the test continues to abort and there is no download in progress, escalate the problem.
2000	ABORT	Response to the test request was not received within the allowable time period. If Error Type 1538 is present in the Error Log, follow the maintenance strategy recommended for this error type.
2007	ABORT	The Announcement circuit pack thinks that Port 1 or Port 9 is busy. 1. Retry the command at 1-minute intervals, a maximum of 5 times. 2. If the test continues to abort, follow the Announcement Port maintenance procedures for Ports 1 and 9. 3. If the Announcement ports pass all their tests, escalate the problem.
2100	ABORT	Could not allocate the necessary system resources to run this test.
	ABORT	Internal System Error 1. Retry the command at 1-minute intervals a maximum of 5 times. 2. If the test continues to abort, escalate the problem.

Continued on next page

Table 9-29. TEST #210 140AY Loop Around Test — *Continued*

Error Code	Test Result	Description/ Recommendation
1-3	FAIL	Test failed. The error code indicates at which speech compression rate the test actually failed (1 being the first rate tested, 3 being the last). 1. Reset the circuit pack via the **reset board UUCSS** command and then run this test again. If the test continues to fail, replace the circuit pack. 2. If there are recurring alarms on this circuit pack caused by this test failing, replace the circuit pack even if step 1 works (see Warning). **WARNING:** *Replacing the circuit pack will result in loss of integrated announcements. See* Essential Service Information *above.*
	PASS	The record channel on the Announcement circuit pack is functioning properly. User-reported troubles on this circuit pack should be investigated using other circuit pack and port tests. Refer to ANN-PT (Announcement Port) Maintenance documentation for a description of the port tests.

Super Frame Match Inquiry Test (#211)

The super frame is a means by which the Speech Processor (SP) synchronizes with the 140AY device on the Announcement circuit pack. If the super frame is not synchronized, the SP will not be able to properly process record/playback requests. Both the SP and the hardware generate a super frame pulse. When these two pulses are out of synch, the SP sets a flag to indicate the mismatch. When this test is run, the state of this flag is returned.

Table 9-30. TEST #211 Super Frame Match Inquiry

Error Code	Test Result	Description/ Recommendation
2000	ABORT	Response to the test request was not received within the allowable time period. If Error Type 1538 is present in the Error Log, follow the maintenance strategy recommended for this Error Type.
2100	ABORT	Could not allocate the necessary system resources to run this test.
	ABORT	Internal System Error 1. Retry the command at 1-minute intervals a maximum of 5 times. 2. If the test continues to abort, escalate the problem.
	FAIL	Test failed. Announcement playbacks should sound corrupted. 1. Reset the circuit pack via the **reset board UUCSS** command and then run this test again. If the test continues to fail, replace the circuit pack (see Warning). 2. If there are recurring alarms on this circuit pack caused by this test failing, replace the circuit pack even if step 1 works (see Warning). **WARNING:** *Replacing the circuit pack will result in loss of integrated announcements. See Essential Service Information above.*
	PASS	The Speech Processor can properly process record/playback requests. User-reported troubles on this circuit pack should be investigated using other circuit pack and port tests. Refer to ANN-PT (Announcement Port) Maintenance documentation for a description of the port tests.

Clock Match Inquiry Test (#212)

This test determines the state of the clock-generating circuitry on the Announcement circuit pack. This circuitry is used to control various pieces of hardware such as the 140AY device, and to synchronize the Announcement circuit pack with the TDM clock carried on the port network's backplane.

Table 9-31. TEST #212 Clock Match Inquiry Test

Error Code	Test Result	Description/ Recommendation
2000	ABORT	Response to the test request was not received within the allowable time period. If Error Type 1538 is present in the Error Log, follow the procedure for that error.
2100	ABORT	Could not allocate the necessary system resources to run this test.
	ABORT	Internal System Error 1. Retry the command at 1-minute intervals a maximum of 5 times. 2. If the test continues to abort, escalate the problem.

Continued on next page

Table 9-31. TEST #212 Clock Match Inquiry Test — *Continued*

Error Code	Test Result	Description/ Recommendation
	FAIL	The ANN-BD may be defective or the Active Tone-Clock circuit pack (TONE-BD) in the same Port Network may be marginal. Announcements recorded or played back while the clock circuitry is not functioning properly will sound distorted. 1. Reset the Announcement circuit pack via the **reset board UUCSS** command and then run this test again. If the test continues to fail, proceed to Step 2 or 3, whichever applies. 2. **If this port network has duplicated Tone-Clocks:** Determine the Active TONE-BD in this Port Network via the **status port-network 1** command. Make the Standby Tone-Clock circuit pack active via the **set tone-clock UUC** command. Rerun the test. If the test passes, then replace the now Standby Tone-Clock circuit pack. If the test continues to fail, replace the ANN-BD circuit pack. **WARNING:** *Replacing the Announcement circuit pack results in loss of integrated announcements. See Essential Service Information above. See TONE-BD for Tone-Clock replacement instructions.*

Continued on next page

Table 9-31. TEST #212 Clock Match Inquiry Test — *Continued*

Error Code	Test Result	Description/ Recommendation
		3. **If the port network has a single Tone-Clock:** Replace the ANN-BD. Rerun the test. If the test continues to fail, then replace the Tone-Clock circuit pack located in the same Port Network as the ANN-BD. **WARNING:** *Replacing the PPN Tone-Clock circuit pack in a Standard Reliability system (simplex SPE) will cause COLD 2 reset (service outage). Replacing a simplex EPN Tone-Clock will cause an EPN reset with service outage to that EPN. See How to Replace a Tone-Clock Circuit Pack in the TONE-BD section of this chapter. Replacing the ANN-BD will result in loss of integrated announcements. See Essential Service Information above.* 4. If failures of this test continue to raise alarms, replace the circuit pack even if the previous steps were successful.
	PASS	Announcement playbacks should have clear sound quality. Investigate user-reported troubles on this circuit pack using the other circuit pack and port tests. Refer to the ANN-PT (Announcement Port) section for descriptions of the port tests.

ANN-PT (Announcement Port)

MO Name As It Appears In Alarm Log	Alarm Level	Initial System Technician Command To Run (a)	Full Name of MO
ANN-PT	MINOR	test port UUCSSpp l	Announcement Port
ANN-PT	WARNING	test port UUCSSpp l	Announcement Port

a. UU is the universal cabinet number (1 for PPN, 2 - 44 for EPNs), C is the carrier designation (A, B, C, D, or E), and SS is the number of the slot in which the circuit pack resides (01 to 21). pp is the two digit port number (01, 02, ...)

The TN750 Announcement circuit pack is a service circuit pack that provides a customer with an integrated means for recording announcements that can be played back on demand by call processing as part of a calling feature (that is, announcements on hunt group calls). There are 16 Announcement Ports on the Announcement circuit pack. Each port can play any integrated announcement, independently of the other ports. In addition to the 16 Announcement Ports, the Announcement circuit pack also has one Data Line Circuit Port (Port 17). The Data Line Circuit Port is used for uploading/downloading the announcement memory to/from the system tape or disk devices. If there are any errors associated with Port 17, refer to DAT-LINE (Data Line Circuit Port) Maintenance documentation. If there are any errors associated with the circuit pack, refer to ANN-BD (Announcement Circuit Pack) Maintenance documentation.

The Announcement circuit pack has two processors on it. The first processor, or Angel, controls the circuit pack, and communicates with the switch via the control channel on the TDM Bus. The second processor, or Speech Processor (SP), controls the speech memory and announcements. Digital speech is converted from its TDM Bus form to an internal storage form (for recording) and vice versa (for playbacks) by the 140AY device on the circuit pack, which has 16 channels (1 for each Announcement Port).

Essential Service Information

There are a number of important basic principles that should be understood before undertaking work on the Announcement circuit pack. These are described in *Essential Service Information* near the beginning of the ANN-BD section of this chapter.

Although Announcement Port 5 and Data Line Circuit Port 17 on the Announcement circuit pack are logically two separate ports, they are physically the same port. Therefore, if one of the ports is in use, the other one will be busy. Also, if Announcement Port 5 is out-of-service, the Data Line Circuit Port will be taken out-of-service. However, if the Data Line Circuit Port is out-of-service, the Announcement Port will remain in-service.

The following topics which pertain to ANN-PT are also discussed in the ANN-BD section:

- Announcement Administration
- Announcement Session
- Uploading and Downloading Announcements

Hardware Error Log Entries and Test to Clear Values

Table 9-32. Announcement Port Error Log Entries

Error Type	Aux Data	Associated Test	Alarm Level	On/Off Board	Test to Clear Value
0*	0	Any	Any	Any	test port UUCSSpp sh r 1
1		Playback Speech Memory Array (PSMA) Test (#206)	MINOR	ON	test port UUCSSpp sh r 3
18	0	The port was busied out.	WARNING	OFF	release port UUCSSpp
130(a)		None	WARNING	ON	test port UUCSSpp sh
257		Channel Administration Memory Array (CAMA) Test (#205)	MINOR	ON	test port UUCSSpp l r 3
	17667	In-line error			
513		140AY Channel Sanity Inquiry Test (#222)	MINOR	ON	test port UUCSSpp sh r 3
	17684	In-line error			
769(b)		None			

* Run the Short Test Sequence first. If all tests pass, run the Long Test Sequence. Refer to the appropriate test description and follow the recommended procedures.

Notes:

a. This error type indicates that the circuit pack has been removed or has been insane for more than 11-minutes. To clear the error, reinsert or replace the circuit pack.

b. This error is logged and the port is alarmed when an alarm is raised on the Announcement circuit pack because of a faulty condition with a common circuit pack resource. Any one of the following alarmed errors on the Announcement circuit pack will cause this error to be logged against the Announcement Port: 1793, 2049, 2305, 2561. Follow the ANN-BD

(Announcement Circuit Pack) Maintenance documentation to resolve these alarms. When the corresponding circuit pack alarm is cleared, this alarm will clear.

System Technician-Demanded Tests: Descriptions and Error Codes

Always investigate tests in the order presented in the table below when inspecting errors in the system. By clearing error codes associated with the *Channel Administration Memory Array (CAMA) Test,* for example, you may also clear errors generated from other tests in the testing sequence.

Order of Investigation	Short Test Sequence	LongTest Sequence	D/ND*
Channel Administration Memory Array (CAMA) Test (#205)		X	ND
Playback Speech Memory Array (PSMA) Test (#206)	X	X	ND
140AY Channel Sanity Inquiry Test (#222)	X	X	ND

* D = Destructive; ND = Nondestructive

Channel Administration Memory Array (CAMA) Test (#205)

This test is a memory device that stores information used to control the 140AY device. The Angel asynchronously feeds the CAMA with the control information. During the CAMA test, the Angel writes patterns into the CAMA, reads them back, and verifies that they match. If the patterns do not match, the test fails. This test is run periodically by the switch maintenance and by the Announcement circuit pack in the background.

Table 9-33. TEST #205 Channel Administration Memory Array (CAMA) Test

Error Code	Test Result	Description/ Recommendation
1000	ABORT	System resources required to run this test are not available. The port may be in use on a valid call. 1. Retry the command at 1-minute intervals a maximum of 5 times. 2. If the test continues to abort, and the circuit pack is not in use, escalate the problem.
2000	ABORT	Response to the test request was not received within the allowable time period. See *Announcement Board Locked Condition* at the end of this section on ANN-PT for more information.
2100	ABORT	Could not allocate the necessary system resources to run this test.
	ABORT	Internal System Error 1. Retry the command at 1-minute intervals a maximum of 5 times. 2. If the test continues to abort, escalate the problem.

Continued on next page

Table 9-33. TEST #205 Channel Administration Memory Array (CAMA) Test — *Continued*

Error Code	Test Result	Description/ Recommendation
	FAIL	Test failed. Announcements played back on this port may sound corrupted. 1. Reset the circuit pack via the **reset board UUCSS** command and then run this test again. If the test continues to fail, replace the circuit pack (see Warning). 2. If there are recurring alarms on this port caused by this test failing, replace the circuit pack even if Step 1 works. **WARNING:** *Replacing the circuit pack will result in loss of integrated announcements. Refer to Essential Service Informationnear the beginning of the section on ANN-BD in this chapter.*
	PASS	This test verifies that the Angel processor can properly set up this port for playbacks. User-reported troubles on this circuit pack should be investigated using other port and circuit pack tests. (Refer to ANN-BD Maintenance documentation for a description of the circuit pack tests.)

Playback Speech Memory Array (PSMA) Test (#206)

The PSMA test checks the integrity of a playback channel's interface to the speech memory and the TDM Bus. The Speech Processor has an internal buffer that contains a specific 256-byte sequence. During this test, the byte sequence is ''played'' through the 140AY device onto the TDM Bus. A General Purpose Tone Detector is used to confirm that the proper sequence was played. *This test is very important.* It is the only test that actually checks an Announcement Port's ability to play back an announcement on the TDM Bus. If the test fails, the Tone Detector will return the number of bytes that did not match the expected sequence. The larger the number, the more severe the problem is with that port. If this test fails, announcements played over this port should sound corrupted.

It is the only test that actually checks an Announcement Port's ability to play back an announcement on the TDM Bus. If the test fails, the Tone Detector will return the number of bytes that did not match the expected sequence. The larger the number, the more severe the problem is with that port. If this test fails, announcements played over this port should sound corrupted.

Table 9-34. TEST #206 Playback Speech Memory Array (PSMA) Test

Error Code	Test Result	Description/ Recommendation
1000	ABORT	System resources required to run this test are not available. The port may be in use on a valid call. 1. Retry the command at 1-minute intervals a maximum of 5 times. 2. If the test continues to abort and the pack is not in use, escalate the problem.
1002	ABORT	The system could not allocate time slots for the test. The system may be under heavy traffic conditions or it may have time slots out-of-service due to TDM-BUS errors. Refer to TDM-BUS (TDM Bus) Maintenance documentation to diagnose any active TDM-BUS errors. 1. If system has no TDM-BUS errors and is not handling heavy traffic, repeat test at 1-minute intervals a maximum of 5 times. 2. If the test continues to abort, escalate the problem.

Continued on next page

Table 9-34. TEST #206 Playback Speech Memory Array (PSMA) Test — *Continued*

Error Code	Test Result	Description/ Recommendation
1003	ABORT	The system could not allocate a tone receiver for the test. The system may be oversized for the number of Tone Detectors present or some Tone Detectors may be out-of-service. 1. Look for TTR-LEV errors in the Error Log. If present, refer to TTR-LEV (TTR Level) Maintenance documentation. 2. Look for TONE-PT errors in the Error Log. If present, refer to TONE-PT (Tone Generator) Maintenance documentation. 3. If neither condition exists, retry the test at 1-minute intervals a maximum of 5 times. 4. If the test continues to abort, escalate the problem.
1024	ABORT	Announcement circuit pack blocked the test because an announcement download is in progress. If an announcement download is in progress, a **status data-module** announcement data extension command should show that the announcement data port is connected to a System Access Port, and the tape drive should be active. (To determine the extension of the announcement data module, use the **list data-module** command.) See *Announcement Board Locked Condition* at the end of this section on ANN-PT for more information. 1. Wait until download is finished (could take a maximum of 45 minutes), and then run the test again. 2. If the test continues to abort and there is no download in progress, escalate the problem.

Continued on next page

Table 9-34. TEST #206 Playback Speech Memory Array (PSMA) Test — *Continued*

Error Code	Test Result	Description/ Recommendation
2000	ABORT	Response to the test request was not received within the allowable time period.
2100	ABORT	Could not allocate the necessary system resources to run this test.
	ABORT	Internal System Error 1. Retry the command at 1-minute intervals a maximum of 5 times. 2. If the test continues to abort, escalate the problem.
1 to 254	FAIL	Test failed. The error code indicates the number of byte count errors found by the Tone Detector. 1. Reset the circuit pack via the **reset board UUCSS** command and then run this test again. If the test continues to fail, replace the circuit pack (see Warning). 2. If there are recurring alarms on this port caused by this test failing, replace the circuit pack even if Step 1 works. **WARNING:** *Replacing the circuit pack will result in loss of integrated announcements. Refer to Essential Service Information near the beginning of the section on ANN-BD in this chapter.*

Continued on next page

Table 9-34. TEST #206 Playback Speech Memory Array (PSMA) Test — *Continued*

Error Code	Test Result	Description/ Recommendation
255	FAIL	Test failed. The Announcement Port and the Tone Detector never synchronized. Check for active GPTD-PT errors, and refer to GPTD-PT (General Purpose Tone Detector Port) Maintenance documentation to diagnose them first. 1. If there are no active GPTD-PT errors, reset the circuit pack via the **reset board UUCSS** command and then run this test again. If the test continues to fail, replace the circuit pack (see Warning). 2. If there are recurring alarms on this port caused by this test failing, replace the circuit pack even if Step 1 works (see Warning). **WARNING:** *Replacing the circuit pack will result in loss of integrated announcements. Refer to Essential Service Information near the beginning of the section on ANN-BD in this chapter.*
	PASS	This port can cleanly play announcements. User-reported troubles on this pack should be investigated using other port and circuit pack tests. Refer to ANN-BD (Announcement Circuit Pack) Maintenance documentation for a description of the circuit pack tests.

140AY Channel Sanity Inquiry Test (#222)

The Angel keeps a sanity status bit for each of the 16 channels on the 140AY device. This test queries the Angel to determine the status for a particular channel. If a channel is insane, that implies that announcements cannot be played back on that channel

Table 9-35. TEST #161 Loop Around Test

Error Code	Test Result	Description/ Recommendation
2000	ABORT	Response to the test request was not received within the allowable time period.
2100	ABORT	Could not allocate the necessary system resources to run this test.
	ABORT	Internal System Error 1. Retry the command at 1-minute intervals a maximum of 5 times. 2. If the test continues to abort, escalate the problem.
	FAIL	Test failed. Announcements cannot be played back over this port. 1. Reset the circuit pack via the **reset board UUCSS** command and then run this test again. If the test continues to fail, replace the circuit pack (see Warning). 2. If there are recurring alarms on this port caused by this test failing, replace the circuit pack even if Step 1 works (see Warning). **WARNING:** *Replacing the circuit pack will result in loss of integrated announcements. Refer to Essential Service Information near the beginning of the section on ANN-BD in this chapter.*
	PASS	Announcements can be played back over this port. User-reported troubles on this pack should be investigated using other port and circuit pack tests. Refer to the ANN-BD (Announcement Circuit Pack) Maintenance documentation for a description of the circuit pack tests.

Announcement Board Locked Condition

a. The Announcement circuit pack can exhibit a condition that does not allow recording.

   If the circuit pack gets locked into this state (this is an extremely rare condition), two of the Announcement Ports on the circuit pack (one of which is the record port) will be unusable by software. Also, **save/restore announcements** will not work since the record port looks busy to the circuit pack. Note that software does not have any way of knowing this and will attempt to use the ports.

   If the circuit pack is locked into this state, the following symptoms will be observed:

   1. When attempting to record an announcement, users will hear the proper record tone, but the announcement will not record (they will not know it until the announcement is played back).
   2. Performing a **test board long** when the circuit pack is in this state will yield the following abort codes:
      - Ports 1 AND 9 abort Test 206 with code 1024.
      - Ports 1 AND 9 abort Test 205 with code 2000.
      - Board level Tests 209 and 210 abort with code 1024.
   3. The **save/restore announcements** command will time out with:

      `Error encountered, can't complete request`

   The Announcement circuit pack lock-up can be cleared remotely by performing a soft reset to the circuit pack:

   - **busy-out board** UUCSS (this command will drop all calls in progress on the Announcement circuit pack).
   - Reset circuit pack using the **reset board UUCSS** command.
   - Release board using the **release board UUCSS** command.

ANNOUNCE

MO Name As It Appears In Alarm Log	Alarm Level	Initial System Technician Command To Run (a)	Full Name of MO
ANNOUNCE	none	none	ANNOUNCEMENT

The Announcement MO logs an error in the hardware error log when either of the following occurs:

- A **save announcement** or **restore announcement** command does not complete successfully.
- The system fails to restore announcements from tape or disk at boot time.

Figure 9-3 illustrates connections between the Announcement circuit pack and the system. To save or restore announcements, an ANNOUNCEMENT Data Extension must be administered, and at least one System Port must be in the *in-service/idle* state.

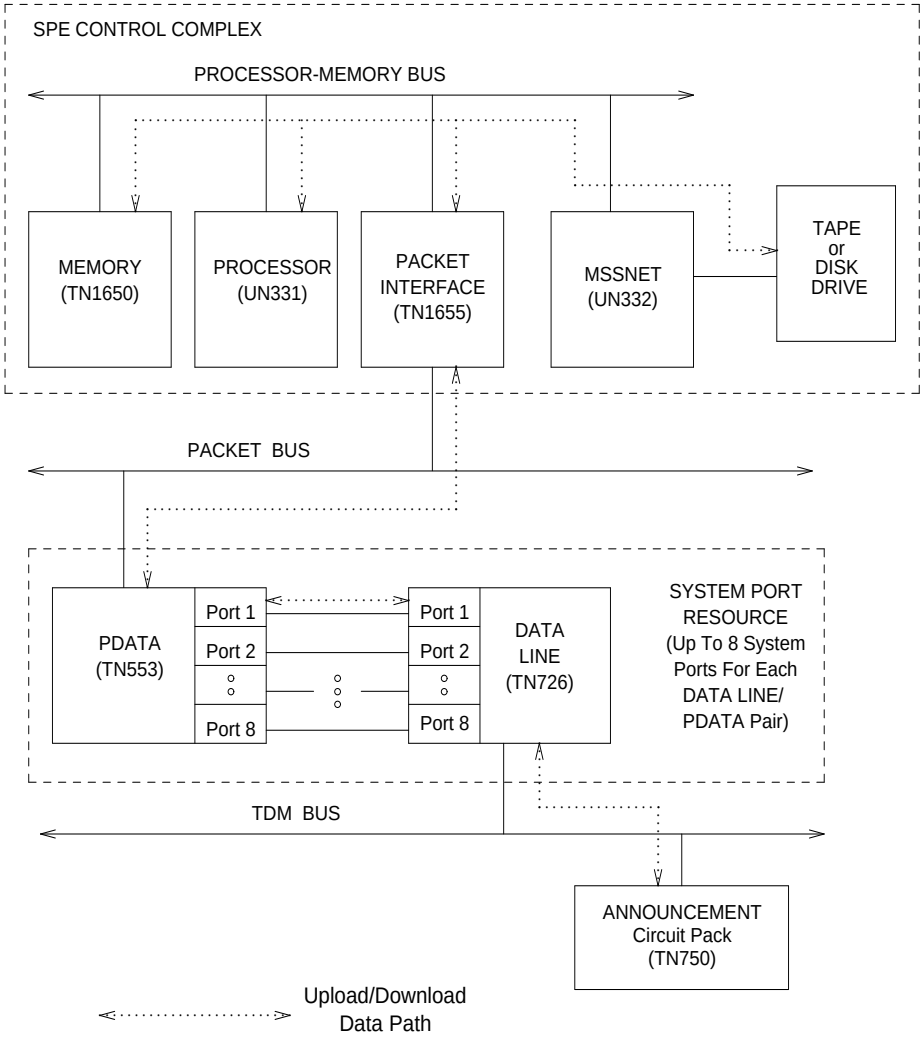

Figure 9-3. Announcements Upload/Download Connectivity

Hardware Error Log Entries

Table 9-36. ANNOUNCE Error Log Entries

Error Type	Aux Data	Associated Test	Alarm Level	On/Off Board	Test to Clear Value
1(a)(f)	any	None			
257(b)(f)	any	None			
513(c)(f)	0	None			
769(d)(f)	0	None			
1025(e)(f)	any	None			

Notes:

a. Error occurred while saving announcements. (See Table 9-37 in the next section for an explanation of aux data and recommended repair actions.)

b. Error occurred while saving announcements to the standby SPE. (See the table in the next section for an explanation of aux data and recommended repair actions.)

c. User pressed the CANCEL key while announcement was being saved by the active SPE.

d. User pressed the CANCEL key while announcement was being saved by the standby SPE.

e. Error occurred while restoring announcements. (See Table 9-37 in the next section for an explanation of aux data and recommended repair actions.)

f. The PORT field for this error displays which SPE was active when the error occurred.

ANNOUNCE Error Code Aux Data

Table 9-37. ANNOUNCE Aux Data and Repair Actions

Aux Data	Description/ Recommendation
30001 through 30054	Disk/Tape errors Check and resolve DISK/TAPE errors and alarms
32001	Internal system error Check other ANNOUNCE errors and take corrective action. If there are no other ANNOUNCE errors, do the following: 1. Retry the command at two-minute intervals a maximum of three times. 2. If the **save/restore announcement** command fails, escalate the problem.
32002	Announcement circuit pack in use. 1) Retry the command at two-minute intervals a maximum of three times. 2) If the **save/restore announcement** command fails, escalate the problem.
32003	Announcement port in use. 1) Wait for all Announcement ports to become available. 2) Enter the **save/restore announcement** command.
32004	No announcements on board. There are no announcements recorded on the Announcement circuit pack. The **save announcement** command is not allowed to prevent the destroying of the announcement file on tape.
32005	Integrated announcement board not present. The Announcement circuit pack is not inserted, or it is defective. 1. Enter the **list config** command to check for the presence of the board in the system. 2. If the Announcement circuit pack is present, use the **test board UUCSS** command to check the status of the Announcement circuit pack.

Continued on next page

Table 9-37. ANNOUNCE Aux Data and Repair Actions — *Continued*

Aux Data	Description/ Recommendation
32006	Announcement Data Module not available. 1. Use the **status data-module** command to check the status of the Announcement Data Module.
32007	Announcement data module out of service. 1. Use the **status data-module** command to check the status of the Announcement Data Module.
32008	Announcement data being saved or loaded. 1. Retry the command at two-minute intervals a maximum of three times. 2. If the **save/restore announcement** command fails, escalate the problem.
32009	No System Port is available, i.e., none are administered, or all are busy. (A System Port is required to save or restore announcements.) 1. Use **add data-module** to administer a System Port if none is administered. 2. If System Ports are administered, use the **status data-module** command to check the status of all System Ports. At least one System Port should be in the in-service/idle state.
32010 32013	System Port not administered or unavailable. (A System Port is required to save or restore announcements.) 1. Use **add data-module** to administer a System Port if none is administered. 2. If System Ports are administered, use the **status data-module** command to check the status of all System Ports. At least one System Port should be in the in-service/idle state.
32012	Required Announcement Data Module not administered. 1. Add an Announcement Data Module and repeat the command.

ASAI-ADJ (Adjunct-Switch Application Interface)

MO Name As It Appears In Alarm Log	Alarm Level	Initial System Technician Command To Run (a)	Full Name of MO
ASAI-ADJ	MAJ/ MIN/ WRN (a)	test station *extension* l	Adjunct-Switch Application Interface

a. The alarm level for ASAI adjunct ports may be administered using the **set options** command. The alarm level can be set independently for Off-Board and On-Board alarms to WARNING, MINOR, or MAJOR for all ASAI adjunct ports in the system.

Refer to the BRI-SET (ISDN-BRI Set) section of this chapter.

AUDIX-BD (AUDIX Circuit Pack)

MO Name As It Appears In Alarm Log	Alarm Level	Initial System Technician Command To Run (a)	Full Name of MO
AUDIX-BD	MINOR	test board UUCSS sh	AUDIX Circuit Pack
AUDIX-BD	WARNING	test board UUCSS sh	AUDIX Circuit Pack

a. *UU* is the universal cabinet number (1 for PPN, 2 - 44 for EPNs). *C* is the carrier designation (A, B, C, D, or E). *SS* is the number of the slot in which the circuit pack resides (01 to 21).

The AUDIX-BD maintenance object represents a TN566/TN2169 DEFINITY AUDIX circuit pack combination (sometimes called Embedded AUDIX) operating in digital-port (DP) mode on a G3r V1 system. (On G3r V2 systems this maintenance object is ADXDP-BD). For circuit-pack-level problems, see XXX-BD. Port-level problems are covered by ADXDP-PT.

On G3r V1 systems, the TN566/TN2169 combination operating in control-link mode appear to the system as a TN746 Analog Line circuit pack with vintage greater than 50. The maintenance strategy for ports on the TN566 operating in control-link mode is described in ADXCL-PT.

DEFINITY AUDIX consists of a combination of 2 circuit packs that occupy 5 slots on a port carrier. The tests described in this manual apply only to switch-side maintenance which tests circuit pack components related to the TDM bus interface. The AUDIX system has an extensive maintenance strategy of its own that is described in *DEFINITY AUDIX System Maintenance*, 585-300-110.

AUDIX-PT (AUDIX Port)

MO Name As It Appears In Alarm Log	Alarm Level	Initial System Technician Command To Run (a)	Full Name of MO
AUDIX-PT	MINOR	test port UUCSSpp l	AUDIX Port
AUDIX-PT	WARNING	test port UUCSSpp sh	AUDIX Port

a. *UU* is the universal cabinet number (1 for PPN, 2 - 44 for EPNs). *C* is the carrier designation (A, B, C, D, or E). *SS* is the number of the slot in which the circuit pack resides (01 to 21). *pp* is the two digit port number (01, 02, ...).

The AUDIX-PT maintenance object represents a port on a TN566/TN2169 DEFINITY AUDIX circuit pack (sometimes called Embedded AUDIX) operating in digital-port (DP) mode on a G3r V1 system. The AUDIX-PT maintenance strategy is covered in ADXDP-PT, which is the name for the maintenance object in G3r V2 systems. For circuit-pack-level problems (AUDIX-BD), see XXX-BD.

The maintenance strategy for ports on the TN566 operating in control-link mode is described in ADXCL-PT. On G3r V1 systems, TN566/TN2169 DEFINITY AUDIX circuit packs operating in control-link mode appear to the system as a TN746 Analog Line circuit pack with vintage greater than 50.

AUX-BD (Auxiliary Trunk Circuit Pack)

MO Name As It Appears In Alarm Log	Alarm Level	Initial System Technician Command To Run (a)	Full Name of MO
AUX-BD	MIN	test board UUCSS sh	Auxiliary Trunk Circuit Pack
AUX-BD	WRN	test board UUCSS sh	Auxiliary Trunk Circuit Pack

a. *UU* is the universal cabinet number (1 for PPN, 2 - 44 for EPNs). *C* is the carrier designation (A, B, C, D, or E). *SS* is the number of the slot in which the circuit pack resides (01 to 21).

Refer to XXX-BD (Common Port Circuit Pack) Maintenance documentation for circuit pack level errors. See also AUX-TRK (Auxiliary Trunk) Maintenance documentation for related trunk information.

AUX-TRK (Auxiliary Trunk)

MO Name As It Appears In Alarm Log	Alarm Level	Initial System Technician Command To Run (a)	Full Name of MO
AUX-TRK	MAJOR (b)	test port UUCSSpp l	Auxiliary Trunk
AUX-TRK	MINOR	test port UUCSSpp l	Auxiliary Trunk
AUX-TRK	WARNING	test port UUCSSpp sh	Auxiliary Trunk

a. *UU* is the universal cabinet number (1 for PPN, 2 - 44 for EPNs). *C* is the carrier designation (A, B, C, D, or E). *SS* is the number of the slot in which the circuit pack resides (01 to 21). *pp* is the two digit port number (01, 02, ...).

b. A Major alarm on a trunk indicates that alarms on these trunks are not downgraded by the **set options** command and that at least 75 percent of the trunks in this trunk group are alarmed.

The TN763B/C/D and TN417 Auxiliary Trunk circuit packs are used to provide ports for the following features: music-on-hold, loudspeaker paging (voice and coded chimes), dictation, automated wake-up with AUDICHRON. Recorder/Announcer, and recorded announcements. (Audichron is a registered trademark of Audichron Corporation.) G3r V1 systems support only the TN763 series. TN763 through TN763C circuit packs support mu-law companding. TN417 circuit packs support A-law companding. TN763D can support either companding mode and defaults to mu-law on initialization. Companding modes are administered on the country-options system-parameters screen. See *DEFINITY Communications System Generic 3 V2 Implementation,* 555-230-653.

Music-on-Hold is administered via the Feature-Related System Parameters Form. Loudspeaker paging can be administered via the **change paging loudspeaker** or **add trunk-group** [Customer-Provided Equipment (CPE)] commands. The **change paging loudspeaker** command is used for system-provided paging; the **add trunk group** command is used for access to otherwise-provided (CPE) paging. The translation for code chiming is administered by the **change paging code-calling-ids** command. Recorded announcement and dictation are administered by the **add trunk-group** (CPE) command. Automatic wake-up is administered by the **change system-parameters hospitality** command and uses all four ports on a TN763B Auxiliary Trunk circuit pack.

Music-on-Hold provides audible feedback to a held, parked, or otherwise split-away party indicating that the call is still connected. The feedback can be customer-furnished music, a recorded message, or other audible indication. Since the Music-on-Hold port is always busy, some of its port tests will always abort.

The Loudspeaker Paging feature provides voice and/or code calling chime paging. If multiple paging zones are provided at a customer's premises, the Loudspeaker Paging feature gives a user the option of paging to a particular zone or to all zones. If a zone is being used for one type of page, it may not be used at that time for the other one.

For system-provided zone paging, each zone needs an Auxiliary Trunk and a 278A or 89A Control Unit with associated amplifier. When voice and coded chime paging are both provided, they can share the same hardware. In addition, music can be connected to the Control Unit to broadcast music whenever the amplifiers are not being used for loudspeaker paging.

An Auxiliary Trunk circuit pack contains four ports and uses DTMF (dual tone multi-frequency) signaling. A different hardware interface between the switch and the auxiliary equipment is used for the four types of signaling that the Auxiliary Trunk circuit pack supports.

The interface used for the DEFINITY Communications System loudspeaker paging consists of the following three pairs:

- The Tip-Ring (T-R) pair used for voice transmission.
- The S (S-S1) pair that carries answer supervision and/or make busy information.
- The SZ (SZ-SZ1) pair that provides the external equipment with a seizure indication.

The interface used for recorded announcement, dictation, and other loudspeaker paging consists of the following two pairs:

- The Tip-Ring (T-R) pair used for voice transmission.
- The S (S-S1) pair that carries answer supervision and/or make busy information.

The interface used for Music-on-Hold consists of one pair:

- The Tip-Ring (T-R) pair used for voice transmission.

The interface, used for automatic wake-up using an Audichron recorder/announcer unit, consists of the following two pairs:

- The Tip-Ring (T-R) pair used for voice transmission.
- The S (S-S1) pair that carries the synchronization signal.

Hardware Error Log Entries and Test to Clear Values

Table 9-38. Auxiliary Trunk Error Log Entries

Error Type	Aux Data	Associated Test	Alarm Level	On/Off Board	Test to Clear Value
0*	0	Any	Any	Any	test port UUCSSpp sh r 1
1(a)	57481	None			
1(b)	57782				
15(c)	Any	Audit Update Test (#36)			
18	0	busyout port UUCSSpp	WARNING	OFF	release port UUCSSpp
130(d)		None	WARNING	ON	test trunk <grp>/<mbr> sh
769(b)	57482	None			
257		Hybrid/Conference	MIN/WRN**	ON	test port UUCSSpp l r 3
		Circuit Test (#33)			
513		NPE Crosstalk Test (#6)	MIN/WRN**	ON	test port UUCSSpp l r 3
1025		Diagnostic Test—Auxiliary Trunk Test (#114)	WARNING	ON	test port UUCSSpp sh r 3

* Run the Short Test Sequence first. If all tests pass, run the Long Test Sequence. Refer to the appropriate test description and follow the recommended procedures.

** Major or Minor alarms on this MO may be downgraded to Warning alarms based on the values used in the **set options** command.

Notes:

a. Error Type 1 with Aux Data 57481 indicates a port fault. Use an empty port if one is available until the circuit pack can be replaced.

b. Error Type 1 or 769 with Aux Data 57482 indicates a fault on signaling lead, which is an off-board error. This error should only occur with loudspeaker paging. If the trunk is being used for another application

other than loudspeaker paging, check that the administration is correct. Otherwise, check the wiring to the external equipment connected to the Auxiliary Trunk and check the external equipment.

c. This is a software audit error that does not indicate any hardware malfunction. Run Short Test Sequence and investigate associated errors (if any).

d. This error type indicates that the circuit pack has been removed or has been insane for more than 11-minutes. To clear the error, reinsert or replace the circuit pack.

System Technician-Demanded Tests: Descriptions and Error Codes

Always investigate tests in the order presented in the table below when inspecting errors in the system. By clearing error codes associated with the *Loop Around and Conference Test,* for example, you may also clear errors generated from other tests in the testing sequence.

Order of Investigation	Short Test Sequence	LongTest Sequence	D/ND*
Loop Around and Conference Test (#33)		X	ND
NPE Crosstalk Test (#6)		X	ND
Diagnostic Test (#114)	X	X	ND
Audit Update Test (#36)	X	X	ND

* D = Destructive; ND = Nondestructive

NPE Crosstalk Test (#6)

One or more Network Processing Elements (NPEs) reside on each circuit pack with a TDM Bus interface. The NPE controls port connectivity and gain, and provides conferencing functions on a per-port basis. The NPE Crosstalk Test verifies that this port's NPE channel talks on the selected time slot and never crosses over to time slots reserved for other connections. If the NPE is not working correctly, one-way and noisy connections may be observed. This test is part of a port's Long Test Sequence and takes about 20 to 30 seconds to complete.

Table 9-39. TEST #6 NPE Crosstalk Test

Error Code	Test Result	Description/ Recommendation
	ABORT	Could not allocate the necessary system resources to run this test. 1. Retry the command at 1-minute intervals a maximum of 5 times. 2. If the test continues to abort, escalate the problem.
1000	ABORT	System resources required to run this test are not available. The port may be busy with a valid call. Use the **display port UUCSSpp** command to determine the trunk group/member number of the port. Use the **status trunk** command to determine the service state of the port. If the service state indicates that the port is in use, then the port is unavailable for certain tests. (See Chapter 8, "Maintenance Commands", for a full description of all possible states.) You must wait until the port is idle before retesting. 1. If the port status is idle, then retry the command at 1-minute intervals a maximum of 5 times. 2. If the test continues to abort, escalate the problem.
1001	ABORT	Could not allocate the necessary system resources to run this test. 1. Retry the command at 1-minute intervals a maximum of 5 times. 2. If the test continues to abort, escalate the problem.

Continued on next page

Table 9-39. TEST #6 NPE Crosstalk Test — *Continued*

Error Code	Test Result	Description/ Recommendation
1002	ABORT	The system could not allocate time slots for the test. The system may be under heavy traffic conditions or it may have time slots out-of-service due to TDM-BUS errors. Refer to TDM-BUS (TDM Bus) Maintenance documentation to diagnose any active TDM-BUS errors. 1. If system has no TDM-BUS errors and is not handling heavy traffic, repeat test at 1-minute intervals a maximum of 5 times. 2. If the test continues to abort, escalate the problem.
1003	ABORT	The system could not allocate a tone receiver for the test. The system may be oversized for the number of Tone Detectors present or some Tone Detectors may be out-of-service. 1. Look for TTR-LEV errors in the Error Log. If present, refer to TTR-LEV (TTR Level) Maintenance documentation. 2. Look for TONE-PT errors in the Error Log. If present, refer to TONE-PT (Tone Generator) Maintenance documentation. 3. If neither condition exists, retry the test at 1-minute intervals a maximum of 5 times. 4. If the test continues to abort, escalate the problem.
1004	ABORT	The port was seized by a valid call during the test. The test has been aborted. Use the **display port UUCSSpp** command to determine the trunk group/member number of the port. Use the **status trunk** command to determine the service state of the port. If the service state indicates that the port is in use, then the port is unavailable for certain tests. (See Chapter 8, "Maintenance Commands", for a full description of all possible states.) You must wait until the port is idle before retesting. 1. Retry the command at 1-minute intervals a maximum of 5 times. 2. If the test continues to abort and the port is not in use, escalate the problem.

Continued on next page

Table 9-39. TEST #6 NPE Crosstalk Test — *Continued*

Error Code	Test Result	Description/ Recommendation
2000	ABORT	Response to the test request was not received within the allowable time period. 1. Retry the command at 1-minute intervals a maximum of 5 times. 2. If the test continues to abort, escalate the problem.
2020	ABORT	The test did not run due to a previously existing error on the specific port or a more general circuit pack error. 1. Examine Error Log for existing errors against this port or the circuit pack and attempt to diagnose the previously existing error.
2100	ABORT	Could not allocate the necessary system resources to run this test. 1. Retry the command at 1-minute intervals a maximum of 5 times. 2. If the test continues to abort, escalate the problem.
Any	FAIL	The Network Processing Element (NPE) of the tested port was found to be transmitting in error. This will cause noisy and unreliable connections. This problem may be caused by defective Tone Detectors. 1. Test all Tone-Clock circuit packs, and resolve any errors on these circuit packs before any action is taken on the Auxiliary Trunk circuit pack. Then, repeat the test. 2. If the test fails again, replace the Auxiliary Trunk circuit pack.
	PASS	The port is correctly using its allocated time slots. User-reported troubles on this port should be investigated using other port tests and examining station, trunk, or external wiring.

Loop Around and Conference Test (#33)

This test checks the reflective loop around and conference capabilities of an Auxiliary Trunk port circuit. The test uses 404-Hz, 1004-Hz, and 2804-Hz tones. Each tone is separately transmitted through the loop and checked. All of these tests are performed on-board.

Table 9-40. TEST #33 Loop Around and Conference Test

Error Code	Test Result	Description/ Recommendation
	ABORT	Could not allocate the necessary system resources to run this test. 1. Retry the command at 1-minute intervals a maximum of 5 times. 2. If the test continues to abort, escalate the problem.
1000	ABORT	System resources required to run this test are not available. The port may be busy with a valid call. Use the **display port UUCSSpp** command to determine the trunk group/member number of the port. Use the **status trunk** command to determine the service state of the port. If the service state indicates that the port is in use, then the port is unavailable for certain tests. (See Chapter 8, "Maintenance Commands", for a full description of all possible states.) You must wait until the port is idle before retesting. 1. If the port status is idle, then retry the command at 1-minute intervals a maximum of 5 times. 2. If the test continues to abort, escalate the problem.

Continued on next page

Table 9-40. TEST #33 Loop Around and Conference Test — *Continued*

Error Code	Test Result	Description/ Recommendation
1004	ABORT	The port was seized by a valid call during the test. The test has been aborted. Use the **display port UUCSSpp** command to determine the trunk group/member number of the port. Use the **status trunk** command to determine the service state of the port. If the service state indicates that the port is in use, then the port is unavailable for certain tests. (See Chapter 8, "Maintenance Commands", for a full description of all possible states.) You must wait until the port is idle before retesting. 1. Retry the command at 1-minute intervals a maximum of 5 times. 2. If the test continues to abort and the port is not in use, escalate the problem.
2100	ABORT	Could not allocate the necessary system resources to run this test. 1. Retry the command at 1-minute intervals a maximum of 5 times. 2. If the test continues to abort, escalate the problem.

Continued on next page

Table 9-40. TEST #33 Loop Around and Conference Test — *Continued*

Error Code	Test Result	Description/ Recommendation
7	FAIL	The conference capabilities of the port failed. 1. If no service problems exist on the port, continue to use the port until the circuit pack can be replaced.

Continued on next page

Table 9-40. TEST #33 Loop Around and Conference Test — *Continued*

Error Code	Test Result	Description/ Recommendation
129	FAIL	The reflective 404-Hz tone test failed, no transmission was detected to or from the port. The problem may be off-board.

Continued on next page

Table 9-40. TEST #33 Loop Around and Conference Test — *Continued*

Error Code	Test Result	Description/ Recommendation
131	FAIL	The reflective 1004-Hz tone test failed. No transmission was detected to or from the port. The problem may be off-board.
133	FAIL	The reflective 2804-Hz tone test failed. No transmission was detected to or from the port. The problem may be off-board. 1. To make sure the problem is on-board, disconnect the port from the auxiliary equipment and retry test. 2. If the test fails, replace the circuit pack. Otherwise, if the test passed after disconnecting the port from the auxiliary equipment, the problem is off-board. Check the wiring and connections to the auxiliary equipment and retry the test after reconnecting the port to the auxiliary equipment. If the test fails, check the auxiliary equipment. See the preceding procedure for a failure with Error Code 7. **NOTE:** If the Loop Around and Conference Test fails for all ports on a circuit pack, a -5 volt power problem is indicated. If a TN736 or TN752 power unit circuit pack is present, the 631DB AC power unit or the 676B power unit may be defective. (The 631DB power unit is used in a medium cabinet powered by an AC source. The 645B power unit is used in a medium cabinet powered by a DC power source.) The system may contain either a TN736 or a TN752 power unit circuit pack OR a 631DB power unit, *but not both types of power units.* To investigate problems with the 631DB power unit, refer to CARR-POW (Carrier Port Power Unit for AC-Powered Systems) Maintenance documentation. To investigate problems with the 645B power unit, refer to CARR-POW (Carrier Port Power Unit for DC-Powered Systems) Maintenance documentation.
	PASS	Loop Around and Conference Test is successful. This port is functioning properly.

Audit Update Test (#36)

This test will send updates of the Auxiliary Trunk port translation for all ports on the Auxiliary Trunk circuit pack that have been translated. The update is non-disruptive and guards against possible corruption of translation data contained on the circuit pack. No response message is expected from the circuit pack once it receives translation updates. The port translation data includes:

- Trunk type
- DTMF time slot
- Termination R/RC
- Gain, high/low
- End-to-end signaling, tone, and pause duration
- Trunk state, idle/active/unavailable
- Companding mode (A-law or mu-law) [G3r V2

Table 9-41. TEST #36 Audit Update Test

Error Code	Test Result	Description/ Recommendation
	ABORT	Could not allocate the necessary system resources to run this test. 1. Retry the command at 1-minute intervals a maximum of 5 times. 2. If the test continues to abort, escalate the problem.
1006	ABORT	Port is in out-of-service state as a result of being busied out. This audit cannot be run. 1. Retry the command once the port is in service (that is, **release port UUCSSpp** command has been run).
2100	ABORT	Could not allocate the necessary system resources to run this test.
	FAIL	Internal System Error 1. Retry the command at 1-minute intervals a maximum of 5 times. 2. If the test continues to fail, escalate the problem.
	PASS	This test passed. Translation information was successfully updated on the circuit pack.

Diagnostic Test—Auxiliary Trunk Test (#114)

The system software sends a message to the on-board microprocessor to operate a relay in the port circuit. If ground is detected, the test passes.

Table 9-42. TEST #114 Diagnostic Test—Auxiliary Trunk Test

Error Code	Test Result	Description/ Recommendation
	ABORT	Could not allocate the necessary system resources to run this test. 1. Retry the command at 1-minute intervals a maximum of 5 times. 2. If the test continues to abort, escalate the problem.
1000	ABORT	System resources required to run this test are not available. The port may be busy with a valid call. Use the **display port UUCSSpp** command to determine the trunk group/member number of the port. Use the **status trunk** command to determine the service state of the port. If the service state indicates that the port is in use, then the port is unavailable for certain tests. (See Chapter 8, "Maintenance Commands", for a full description of all possible states.) You must wait until the port is idle before retesting. 1. If the port status is idle, then retry the command at 1-minute intervals a maximum of 5 times. 2. If the test continues to abort, escalate the problem.
1004	ABORT	The port was seized by a valid call during the test. The test has been aborted. Use the **display port UUCSSpp** command to determine the trunk group/member number of the port. Use the **status trunk** command to determine the service state of the port. If the service state indicates that the port is in use, then the port is unavailable for certain tests. (See Chapter 8, "Maintenance Commands", for a full description of all possible states.) You must wait until the port is idle before retesting. 1. Retry the command at 1-minute intervals a maximum of 5 times. 2. If the test continues to abort and the port is not in use, escalate the problem.

Continued on next page

Table 9-42. TEST #114 Diagnostic Test—Auxiliary Trunk Test — *Continued*

Error Code	Test Result	Description/ Recommendation
2100	ABORT	Could not allocate the necessary system resources to run this test. 1. Retry the command at 1-minute intervals a maximum of 5 times. 2. If the test continues to abort, escalate the problem.
	FAIL	This test failed to detect ground. 1. Try the test once more. 2. If the test fails again, replace circuit pack.
	PASS	This test passed. Ground was detected.

Maintenance Object Repair Procedures
BRI-BD to BRI-SET

B

BRI-BD (ISDN-BRI Line Circuit Pack)

MO Name As It Appears in Alarm Log	Alarm Level	Initial System Technician Command to Run (a)	Full Name of MO
BRI-BD	MAJOR	test board UUCSS l	ISDN-BRI Line Circuit Pack
BRI-BD	MINOR	test board UUCSS l	ISDN-BRI Line Circuit Pack
BRI-BD	WARNING	test board UUCSS sh	ISDN-BRI Line Circuit Pack
LGATE-BD	MAJOR	test board UUCSS l	Ethernet Multi-Function Board
LGATE-BD	MINOR	test board UUCSS l	Ethernet Multi-Function Board
LGATE-BD	WARNING	test board UUCSS sh	Ethernet Multi-Function Board

a. UU is the universal cabinet number (1 for PPN, 2 -44 for EPNs). C is the carrier designation (A, B, C, D, or E). SS is the number of the slot in which the circuit pack resides (01 to 21). pp is the two digit port number (01, 02, ...).

CAUTION:

A detailed flowchart for isolating and resolving Packet Bus faults is included in Chapter 9, "Maintenance Object Repair Procedures", "Packet Bus Fault Isolation and Correction.'' This flowchart, along with the other information presented in the chapter, can help in resolving problems that involve more than a single station or circuit pack. Whenever the repair procedures for this Maintenance Object refer to Packet Bus and/or Packet Control maintenance, be sure to reference Chapter 9, "Maintenance Object Repair Procedures", "Packet Bus Fault Isolation and Correction'' in addition to the relevant MO documentation.

This section relates to the TN556 ISDN BRI, TN2198 ISDN BRIU, TN566 Ethernet, Call Viser ASAI (LGATE)-Ethernet Multi-Function (MFB) boards.

The TN566 LGATE MFB provides DEFINITY with the interface to Adjunct-Switch Application Interface (ASAI) and AT&T adjuncts (for example, CONVERSANT® Voice System). This circuit pack contains 12 ports for line circuit interface (although only 8 are usable by the switch), each of which operates with 2 B-Channels and 1 D-Channel as specified in the AT&T ISDN-BRI Specification. In this context, the term "ISDN-BRI port" is used to refer to ports on the TN566 MFB circuit pack which are connected to ASAI or AT&T adjuncts. The TN566 LGATE MFB is handled by the switch software as if it is an ISDN BRI compatible board and all maintenance actions referring to ASAI and AT&T adjunct Links in this section apply.

The TN556 and TN2198 ISDN-BRI Lines are a packet port circuit pack that provides access to ISDN-BRI endpoints. The ISDN-BRI Line circuit packs supports 12 ports, each of which provides access to ISDN stations. Voice and circuit-switched data from the ISDN stations are carried on the Time Division Multiplex (TDM) Bus. Signaling is carried over the Packet Bus.

LEDS

The ISDN-BRI Line circuit pack performs extensive initialization tests and lights both the red and green LEDS during the initialization testing. See Chapter 7, "LED Indicators", ''LED Interpretation'' for more details on circuit pack status LEDs.

Hardware Error Log Entries and Test to Clear Values

Table 9-43. BRI-BD Error Log Entries

Error Type	Aux Data	Associated Test	Alarm Level	On/Off Board	Test to Clear Value
0*	0	Any	Any	Any	test board UUCSS sh r 1
1(a)	Any	None	MINOR	ON	
18(b)	0	busyout board UUCSS	WARNING	OFF	release board UUCSS
23(c)	0	None	WARNING	OFF	
257(d)	65535	Control Channel Loop Test (#52)	MINOR	ON	test board UUCSS r 20
513(e)	4352 to 4357				
769(f)	4358				
1025(g)	4363	NPE Audit Test (#50)			
1293 to 1294 (h)	46088 to 46096	SAKI Sanity Test (#534)	MINOR	ON	See footnote (h)
1537 to 1538 (i)	46082		MINOR	ON	
1793 (j)	46080		MINOR	ON	
1794 (j)	46094		MINOR	ON	
1795 (j)	46085		MINOR	ON	
2306 (j)		LANBIC Receive Parity Error Counter Test (#595)			
3330 (k)	46083		MINOR	OFF	

Continued on next page

Table 9-43. BRI-BD Error Log Entries — *Continued*

Error Type	Aux Data	Associated Test	Alarm Level	On/Off Board	Test to Clear Value
3840 (l)	4096 to 4101				
3843 (m)	46097				
3999 (n)	Any	None			

* Run the Short Test Sequence first. If all tests pass, run the Long Test Sequence. Refer to the appropriate test description and follow the recommended procedures.

Notes:

a. This error indicates the circuit pack totally stopped functioning or it was physically removed from the system.

NOTE:
The alarm is logged approximately 11 minutes after the circuit pack has been removed and/or SAKI Sanity Test (#53) fails.

If the circuit pack is not in the system, insert a circuit pack (in the same slot as the error indicates) to resolve this error. Or, if the circuit pack is in the system and the red LED is on, then follow the instructions for “Red (alarm)” in the “Control and Port Circuit Pack Status LEDs” section in Chapter 7, "LED Indicators", “LED Interpretation.” (Also, refer to the “Handling Common Port Circuit Packs” section in Chapter 5, "Responding to Alarms and Errors", “Routine Maintenance Procedures.”)

b. This circuit pack has been busied out via the **busyout board UUCSS** command.

c. Port(s) has(have) been administered on this circuit pack but the circuit pack is not physically present.

d. This error indicates transient communication problems between the switch and this circuit pack. Execute the **test board UUCSS** command and refer to the repair procedures for the Control Channel Loop Around Test (#52).

e. An on-board hardware failure has been detected by the circuit pack.

The reported aux data values correspond to the following detected errors:

4352	External RAM error
4353	Internal RAM error
4355	ROM Checksum error
4357	Instruction set error

Reset the circuit pack by executing the **busyout board UUCSS** and **reset board UUCSS** commands. When it is reset, the circuit pack executes a set of tests to detect the presence of any of the above faults. The detection of one of these errors during initialization causes the circuit pack to lock-up and appear insane to the system. See the repair procedure in footnote (a) for error type 1.

f. This error is reported by the circuit pack when it detects a program logic error. While no action is required, this error may lead to errors of other types being reported against this circuit pack.

g. This error is reported by the circuit pack when it cannot update NPE memory and read it back. This error type can be ignored, but may lead to errors of other types being reported against this circuit pack.

h. A critical hardware failure has been detected on the circuit pack. Reset the circuit pack via the **busyout board UUCSS** and **reset board UUCSS** commands. If the Circuit Pack Restart Test (#594) passes, then the on-board circuitry is healthy. Retire the alarm via the **test board UUCSS long clear** command. If the Circuit Pack Restart Test (#594) fails, replace the circuit pack.

   The reported error types correspond to the following detected errors:

1293	On-board auxiliary processor insane
1294	Internal memory access error

i. These error types are reported when the following errors are detected:

1537	Frame overrun at Packet Bus interface. This condition may be caused by an on-board fault or by faulty data received on one of the circuit pack's external ports. If any of the ports on this circuit pack are alarmed, refer to the repair procedures for those maintenance objects.
1538	Circuit packet is hyperactive; that is, it is flooding the switch with messages sent over the control channel. The circuit pack is taken out-of-service when a threshold number of these errors is reported to the switch. Clear the alarm via the following commands: **busyout board UUCSS**, **reset board UUCSS**, **test board UUCSS long clear**, **release board UUCSS**. If the error recurs within 10 minutes, then replace the circuit pack.

j. These errors indicate that the circuit pack is having problems transmitting data to the Packet Bus.

1793	Parity errors are detected when transmitting data to the Packet Bus.
1794	Overflow of Packet Bus transmit buffers has occurred.
1795	Circuit pack cannot find end of frame when transmitting to Packet Bus. Clear the alarm via the following commands: **busyout board UUCSS**, **reset board UUCSS**, **test board UUCSS long clear**, **release board UUCSS**. If the error recurs within 10 minutes, then replace the circuit pack.
2306	This error occurs when the circuit pack detects an error in a received frame from the packet bus. These errors are most likely caused by a packet bus problem, but may be due to a circuit pack fault.An invalid Link Access Procedure Data (LAPD) frame error occurs if the frame contains a bad Cyclical Redundancy Checking (CRC), is greater than the maximum length, or violates the link level protocol.When bus parity errors are reported, the LANBIC Receive Parity Error Counter Test (#595) should be performed to determine if the condition had cleared. Refer to the PKT-BUS Maintenance documentation to determine if the problem is isolated to this circuit pack or if the problem is caused by Packet Bus faults.

k. A critical failure has been detected in the Packet Bus interface of the circuit pack. This failure may be due to either a Packet Bus fault or an on-board fault. If the Packet Bus is alarmed, refer to the PKT-BUS section and the Packet Bus Fault Isolation and Recovery section of the

Maintenance documentation for recommended repair procedures. The probability of this error being related to Packet bus problems increases with the number of ISDN-BRI circuit packs displaying this error.

If the Packet Bus is not alarmed, reset the circuit pack via the **busyout board UUCSS** and **reset board UUCSS** commands. If the Circuit Pack Restart Test (#594) passes, then the on-board circuitry is healthy. Retire the alarm via the **test board UUCSS long clear** command. If the Circuit Pack Restart Test (#594) fails, replace the circuit pack. If the problem persists after complying with the above instructions, then follow normal escalation procedures.

l. These errors are not service-affecting. No action is required. These errors are reported by the circuit pack when it receives a bad control channel message from the switch. The auxiliary data identifies the following error events:

4096	Bad major heading
4097	Bad port number
4098	Bad data
4099	Bad sub-qualifier
4100	State inconsistency
4101	Inconsistent downlink message

m. This error is not service-affecting. No action is required.

3843 Bad translation RAM detected, but call continues by using another translation location.

n. This error indicates that the circuit pack sent a large number of control channel messages to the switch in a short period of time.

3999 If error type 1538 is also present, then the circuit pack was taken out-of-service due to hyperactivity.

If error type 1538 was not present, then the circuit pack has not been taken out-of-service, but has generated 50% of the messages necessary to be considered hyperactive. This may be normal during heavy traffic periods. If traffic is light it may indicate a problem with the circuit pack or the equipment attached to it.

System Technician-Demanded Tests: Descriptions and Error Codes

Always investigate tests in the order presented in the following tables when inspecting errors in the system. By clearing error codes associated with the *Control Channel Loop Around Test,* for example, you may also clear errors generated from other tests in the testing sequence.

Order of Investigation	ShortTest Sequence	LongTest Sequence	D/ND*
Control Channel Loop-Around Test (#52)	X	X	ND
NPE Audit Test (#50)		X	ND
LANBIC Receive Parity Error Counter Test (#595)		X	ND

* D = Destructive; ND = Nondestructive

NPE Audit Test (#50)

Refer to the repair procedure described in the XXX-BD (Common Port Circuit Pack) Maintenance documentation as NPE Audit Test (#50).

Control Channel Loop Around Test (#52)

Refer to the repair procedure described in the XXX-BD (Common Port Circuit Pack) Maintenance documentation as Control Channel Loop Around Test (#52).

SAKI Sanity Test (#53)

Refer to the repair procedure described in the XXX-BD (Common Port Circuit Pack) Maintenance documentation as SAKI Sanity Test (#53).

LANBIC Receive Parity Error Counter Test (#595)

This test is destructive.

The test reads and clears the LANBIC Receive Parity Error Counter on the circuit pack. This counter is incremented by the circuit pack when it detects a parity error in data received from the Packet Bus.

These errors may be indicative of a circuit pack problem, Packet Bus problem, or a problem with another circuit pack on the bus. This test is useful for verifying the repair of the problem.

Table 9-44. TEST #595 LANBIC Receive Parity Error Counter Test

Error Code	Test Result	Description/ Recommendation
2000	ABORT	Response to the test was not received from the circuit pack within the allowable time period. 1. If the test aborts repeatedly a maximum of five times, reset the circuit pack via the **busyout board UUCSS** and **reset board UUCSS** commands. 2. If the test aborts again, replace the circuit pack.

Continued on next page

Table 9-44. TEST #595 LANBIC Receive Parity Error Counter Test — *Continued*

Error Code	Test Result	Description/ Recommendation
2100	ABORT	Could not allocate the necessary system resources to run this test.
2012	ABORT	Internal System Error. 1. Retry the command at one-minute intervals a maximum of five times. 2. If the test continues to fail, escalate the problem.
1-10	FAIL	The circuit pack is still detecting errors of this type. The error code indicates the value of the on-board error counter. 1. Retry the command at one-minute intervals a maximum of five times. 2. If the test continues to fail, verify the validity of the Packet Bus. Run the Packet Bus maintenance test with the **test pkt P long** command. If any Packet Bus tests fail, refer to the PKT-BUS (Packet Bus) Maintenance documentation for recommended repair procedures. 3. If the Packet Bus test passes, check the validity of the circuit pack. Execute a test that involves data transmission onto the Packet Bus. For example, the BRI may use the connectivity tests of the port-level maintenance object (BRI-PORT) by executing the **test port UUCSSpp** command. Refer to the repair procedures for the executed test if it fails. Otherwise, proceed to the next step. 4. Other circuit packs on the Packet Bus may be the cause of the parity error. Use the **display errors** command to check the Error Log for other circuit packs that are alarmed. If any alarms are present for the other circuit packs, retire those alarms also. Then, rerun the LANBIC Receive Parity Error Counter Test (#595) on this circuit pack.
	PASS	No errors detected by circuit pack.

BRI-DAT (ISDN-BRI Data Module)

MO Name As It Appears in Alarm Log	Alarm Level	Initial System Technician Command to Run	Full Name of MO
BRI-DAT	WARNING(a)	test data-module	ISDN-BRI Stand-alone Data Module

a. The alarm level for ASAI or AT&T adjuncts may be administered using the **set options** command. The alarm level can be set independently for Off-Board and On-Board alarms to WARNING, MINOR, or MAJOR for all ASAI adjuncts in the system.

Refer to BRI-SET (ISDN-BRI Set) section of this chapter.

BRI-PORT (ISDN-BRI Port), ABRI-PORT (ASAI ISDN-BRI Port)]

MO Name As It Appears in Alarm Log	Alarm Level	Initial System Technician Command to Run (a)	Full Name of MO
BRI-PORT	MINOR	test port PCSSpp l	ISDN-BRI Port
BRI-PORT	WARNING	test port PCSSpp sh	ISDN-BRI Port
ABRI-PORT	MAJOR (b),(c)	test port PCSSpp l	ASAI ISDN-BRI Port
ABRI-PORT	WARNING(b),(c)	test port PCSSpp l	ASAI ISDN-BRI Port
ATT-PORT	MAJOR (b), (c)	test port PCSSpp l	AT&T Adjunct ISDN-BRI Port
ATT-PORT	WARNING (b), (c)	test port PCSSpp l	AT&T Adjunct ISDN-BRI Port
LGATE-PT	MAJOR (b), (c)	test port PCSSpp l	Ethernet ASAI Port
LGATE-PT	WARNING (b), (c)	test port PCSSpp l	Ethernet ASAI Port
ATTE-PT	MAJOR (b), (c)	test port PCSSpp l	Ethernet AT&T Adjunct Port
ATTE-PT	WARNING (b), (c)	test port PCSSpp l	Ethernet AT&T Adjunct Port

a. UU is the universal cabinet number (1 for PPN, 2 -44 for EPNs). C is the carrier designation (A, B, C, D, or E). SS is the number of the slot in which the circuit pack resides (01 to 21). pp is the two digit port number (01, 02, ...).

b. The alarm level for ASAI and AT&T adjunct ports may be administered using the **set options** command. The alarm level can be set independently for Off-Board and On-Board alarms to WARNING, MINOR, or MAJOR for all ASAI and AT&T adjunct ports in the system.

c. All alarming for an ASAI and AT&T adjunct and OFF-BOARD alarming for an ASAI or AT&T port is disabled if the ASAI or AT&T adjunct asks the switch to suspend maintenance. When this occurs, an error and a WARNING alarm is logged against the ASAI or AT&T adjunct. The Hardware Error and Alarm Logs should be checked to see if the adjunct has disabled alarming.

NOTE:
Some of the information in this section is reserved for future use.

CAUTION:
A detailed flowchart for isolating and resolving Packet Bus faults is included in Chapter 9, "Maintenance Object Repair Procedures", "Packet Bus Fault Isolation and Correction." This flowchart, along with the other information presented in the chapter, can help in resolving problems that involve more than a single station or circuit pack. Whenever the repair procedures for this Maintenance Object refer to Packet Bus and/or Packet Control maintenance, be sure to reference Chapter 9, "Maintenance Object Repair Procedures", "Packet Bus Fault Isolation and Correction" in addition to the relevant MO documentation.

WARNING:
If a significant Packet Bus failure occurs, errors and alarms may not be logged as expected for BRI-PORT/ABRI-POR/ATT-PORT/LGATE-PT/ATTE-PT. Conditions under which this occurs are detailed in the "Maintenance of the Packet Bus" section of Chapter 9, "Maintenance Object Repair Procedures", "Packet Bus Fault Isolation and Correction."

The TN566 LGATE MFB provides DEFINITY with the interface to Adjunct-Switch Application Interface (ASAI) and AT&T adjuncts (for example, CONVERSANT®. Voice System). The circuit pack contains 12 ports of line circuit interface (although only 8 are usable by the switch), each of which operates with two B-channels (referred to as B1 and B2 throughout this section) and one D-channel as specified in the AT&T ISDN-BRI Specification. In this context, the term "ISDN-BRI port" is used to refer collectively to ports on the TN566 circuit pack which are connected to ASAI or AT&T adjuncts.

The TN556 and TN2198 ISDN-BRI Line circuit packs provide DEFINITY with the interface to ISDN-BRI end points, Adjunct-Switch Application Interface (ASAI) and AT&T adjuncts (for example, CONVERSANT®. Voice System). The circuit packs contain 12 ports of line circuit interface, each of which operates with two B-channels (referred to as B1 and B2 throughout this section) and one D-channel as specified in the AT&T ISDN-BRI Specification. In this context, the term "ISDN-BRI port" is used to refer collectively to ports on the TN556 an TN2198 circuit packs which are connected to either BRI endpoints, ASAI or AT&T adjuncts.

For BRI endpoints, each B-channel may support voice or circuit-switched data and may be circuit-switched simultaneously. The B-channels are not used on ports connected to ASAI or AT&T adjuncts. The D-channel is used for conveying signaling between the switch and a BRI endpoint(s), ASAI or AT&T adjunct. Each ISDN-BRI D-channel is connected to the switch processor and the ISDN-BRI port through the Packet Control circuit pack and the Packet Bus.

ISDN-BRI endpoints are available in various configurations. All endpoints require the D-channel to convey signaling information to the switch. Only one B-channel is required for a voice-only set or a stand-alone data module (BRI-DAT). A voice and data-capable set requires both B-channels (one for voice and one for data). Therefore, each TN556 or TN2198 port can support either two voice-only sets, two stand-alone data modules (BRI-DAT), or one voice and data-capable set. Only a single ASAI or AT&T adjunct may be connected to an ISDN-BRI port. Multiple adjuncts per line are not supported.

The following figure illustrates the physical connection (solid line) between an ISDN-BRI Port and its associated ISDN-BRI set(s). Each physical connection allows for two B-channels and one D-channel. Each ISDN-BRI circuit pack can support up to 12 of these *physical* connections to different voice and voice/data sets or ASAI or AT&T adjuncts. On a TN2198 each ISDN-BRI circuit pack can support up to 12 *physical* connections to a NT1 which in turn connects to 2 terminals.

This section covers the maintenance documentation for ISDN-BRI ports. Some of the results of maintenance testing of ISDN-BRI ports may be affected by the health of the ISDN-BRI Line circuit pack (BRI-BD), BRI endpoint (BRI-SET), or ASAI adjunct (ASAI-ADJ/LGATE-AJ/LGATE-AJ) or AT&T adjunct (ATT-ADJ/ATTE-AJ). These interactions should be kept in mind when investigating the cause of ISDN-BRI port problems. For more information on the circuit pack and endpoints, refer to the BRI-BD (ISDN-BRI Line Circuit Pack) Maintenance documentation, the BRI-SET (ISDN-BRI Endpoint) Maintenance documentation, and ASAI-ADJ (Adjunct-Switch Application Interface) Maintenance documentation, ATT-ADJ (AT&T Adjunct) Maintenance documentation, LGATE-AJ (Ethernet Adjunct-Switch Application Interface) Maintenance documentation, ATTE-AJ (Ethernet AT&T Adjunct) Maintenance documentation.

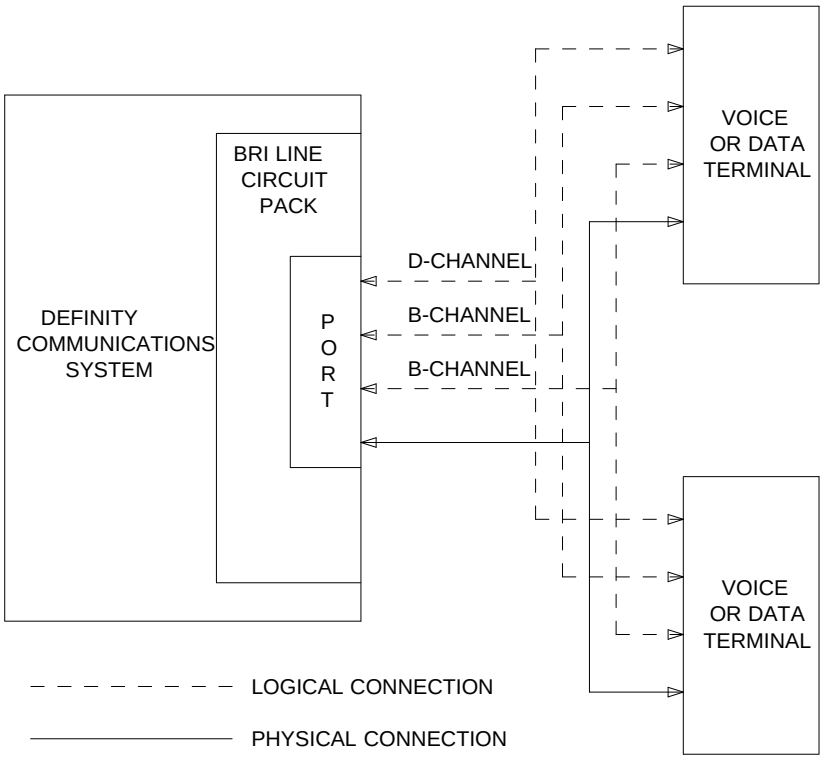

Figure 9-4. ISDN-BRI Port Interactions

Hardware Error Log Entries and Test to Clear Values

Table 9-45. ISDN-BRI Port Error Log Entries

Error Type	Aux Data	Associated Test	Alarm Level BRI-PORT	Alarm Level ABRI-PORT ATT-PORT LGATE-PT ATTE-PT	On/Off Board	Test to Clear Value
0*	0	Any	Any	Any	Any	test port PCSSpp sh r 1
1(a)	(a)	Level 1 Status Inquiry (#621)	WRN	MAJ/MIN/WRN†	OFF	test port PCSSpp sh r 2
18		busyout port PCSSpp	WRN		OFF	release port PCSSpp
130(b)			WRN		ON	test port PCSS sh
257(c)	(c)	EPF Inquiry (#622)	WRN	MAJ/MIN/WRN†	OFF	test port PCSSpp sh r 1
513(d)	(d) 46222	none	(d)	(d)	ON	
769(e)	0	none	WRN	MAJ	OFF	
1281(f)		NPE Crosstalk (#617)	MIN/WRN†		ON	test port PCSSpp l r 2
1537(g)	46210	CRC Error Counter (#623)	WRN	MAJ/MIN/WRN†	OFF	
1793(h)		BRI Port Local TDM Loop Around (#619)	MIN/WRN†		ON	test port PCSSpp l r 2
3841(i)	46208	None				
3842(j)	0	None				
3843(k)	0	None				
3844(l)	46223	None				

Continued on next page

Table 9-45. ISDN-BRI Port Error Log Entries — *Continued*

Error Type	Aux Data	Associated Test	Alarm Level BRI-PORT	Alarm Level ABRI-PORT ATT-PORT LGATE-PT ATTE-PT	On/Off Board	Test to Clear Value
3845(m)		None				
3846(n)	TEI	None				
3847(o)	0	None				

* Run the Short Test Sequence first. If all tests pass, run the Long Test Sequence. Refer to the appropriate test description and follow the recommended procedures.

† Major and Minor alarms on this MO may be downgraded to Warning alarms based on the value used in the set options command.

Notes:

a. This error occurs when the Level 1 Status Inquiry fails or when the BRI circuit pack detects that Level 1 has been deactivated on the port. The aux data field contains one of the following values:

- blank - this indicates that the Level 1 Status Inquiry failed.
- 32773 - this is a message from the BRI-LINE circuit pack indicating Level 1 has been deactivated.

Refer to the repair procedures for Test #621.

b. This error type indicates that the circuit pack has been removed or has been insane for more than 11 minutes. To clear the error, replace or reinsert the circuit pack.

c. This error occurs when the EPF Status Inquiry fails due to an overcurrent condition or when the BRI-LINE circuit pack detects that the EPF is in an over current condition. The aux data field contains one of the following values:

- blank - this indicates that the EPF Status Inquiry failed due to an overcurrent condition.
- 40988 - this indicates that the BRI-LINE circuit pack has detected an overcurrent condition and has turned the EPF off.

Execute the Short Test Sequence and see the repair procedures for Test #622.

d. This error indicates that the circuit pack is having problems transmitting data to the Packet Bus, thus affecting the conveyance of signaling information over the D-channel. With Aux Data 46222, this error occurs when the Packet Bus transmit buffers overflow. This condition probably indicates a hardware problem. The BRI-PORT Alarm Level for the error with Aux Data 46222 is ‘‘MIN/WRN,’’ and the ABRI-PORT/ATT-PORT/LGATE-PT/ATTE-PT Alarm Level is ‘‘MAJ/MIN/WNR.’’ With Aux Data 0, this error occurs whenever the Packet Bus transmit FIFO buffers overflow. This condition can be caused by an on-board hardware problem as well as by problems on the Packet Bus that disrupt the BRI circuit pack’s ability to transmit data onto the Packet Bus. Use troubleshooting procedures for both on-board hardware problems and potential off-board Packet Bus problems. See the PKT-BUS MO section in this chapter as well as Chapter 9, "Maintenance Object Repair Procedures", ‘‘Packet Bus Fault Isolation and Correction’’ for more details on Packet Bus troubleshooting procedures. The BRI-PORT Alarm Level for the error with Aux Data 0 is ‘‘MINOR,’’ and the ABRI-PORT/ATT-PORT/LGATE-PT/ATTE-PT Alarm Level is ‘‘MAJOR.’’

e. This error occurs when the NPE Crosstalk Test (#617) fails. Run the Long Test Sequence and pay particular attention to the results of Test #617.

f. This error occurs when broadcast signaling links associated with this port have too much link establishment related traffic. This could occur if an endpoint on this port is sending link establishment traffic on a port level broadcast link or if there are Level 1 problems on the port. Check the error logs for Level 1 errors. If Level 1 problems exist, follow the repair procedures listed for test #621. Software will suspend activity to this port for 75 minutes when the port is alarmed due to this error (note that service suspension does not occur if the port is an ABRI-PORT/LGATE-PT/ATTE-PT/ATT-PORT). If this problem persists, replace the endpoint or endpoints associated with this port. If replacing the endpoints does not fix the problem, follow normal escalation procedures.

g. This error occurs when the port receives an invalid frame over the D-channel. When CRC errors exceed five within 15 minutes, the port is taken out of service for five seconds. If five more CRC errors are received within 15 minutes of the first set of five errors, the port is taken out of service for one minute. If five more CRC errors are received within 15 minutes of the last five, the port is taken out of service for 15 minutes.

   This error is most likely due to a problem with the wiring to the set or adjunct, interference on the wiring due to a noise source, or no termination (an open circuit). It usually does not indicate a problem with the circuit pack.

   - Check the wiring to the endpoints or the adjunct.

- If the problem persists, replace the endpoints or adjuncts, or escalate the problem.

h. This error occurs when the BRI Port Local TDM Loop Around

Test (#619) fails. Run the Long Test Sequence and pay particular attention to the results of Test #619.

There are no Test to Clear Values for the following error types. The error types are simply provided as additional data that may prove useful while troubleshooting.

i. This error occurs when a Layer 1 Transmission error is detected for the port. Run the Long Test Sequence and pay particular attention to the results of the Layer 1 Transmission Error Counter Test (#624).

j. A BRI port supports up to three Terminal Endpoint Identifiers (TEIs). This error occurs when the switch receives a request for a fourth TEI on a port. Check the number of endpoints administered for this port.

k. This error occurs when an SPID initialization request is made from an endpoint and the switch determines that the SPID value is invalid or is a duplicate of another SPID that is already initialized at Layer 3 on the port. Check the administration of the endpoints.

l. This error occurs when the circuit pack detects an overflow of its receive buffers. Run the Long Test Sequence and pay particular attention to the results of the Receive First In First Out (FIFO) Overflow Error Counter Test (#625).

m. This error occurs when the BRI Port Local LAN Loop Around Test (#618) fails. Run the Long Test Sequence and pay particular attention to the results of Test #618.

n. This error most likely occurs when the Terminal Endpoint Identifier (TEI) administered for the ASAI or AT&T endpoint does not match the TEI administered in the ASAI or AT&T adjunct. Check the switch administration of the TEI against that of the adjunct and make sure that both are using the same TEI.

o. Indicates that sets on the port do not support Layer 3 initialization. Consult the Service Set documentation.

System Technician-Demanded Tests: Descriptions and Error Codes

Always investigate tests in the order presented in the following tables when inspecting errors in the system. By clearing error codes associated with the *NPE Crosstalk Test*, for example, you may also clear errors generated from other tests in the testing sequence.

Order of Investigation	Short Test Sequence	Long Test Sequence	D/ND*
NPE Crosstalk Test (#617)		X	D
BRI Port Local LAN Loop Around Test (#618)		X	D
BRI Port Local TDM Loop Around Test (#619)		X	D
Electronic Power Feed Restoral Test (#620)	X	X	ND
Level 1 Status Inquiry Test (#621)	X	X	ND
Electronic Power Feed Inquiry Test (#622)	X	X	ND
CRC Error Counter Test (#623)		X	ND
Layer 1 Transmission Error Counter Test (#624)		X	ND
Receive FIFO Overflow Error Counter Test (#625)		X	ND
Clear Error Counters (#270)	X	X	ND

* D = Destructive; ND = Nondestructive

NOTE:
The NPE Crosstalk Test and the BRI Port Local TDM Loop Around Test are not executed for ABRI-PORT/ATT-PORT/LGATE-PT/ATTE-PT.

NPE Crosstalk Test (#617)

This test is destructive.

One or more NPEs reside on each circuit pack with a TDM Bus interface. The NPE controls port connectivity and gain, and provides conferencing functions on a per port basis. The NPE Crosstalk Test verifies that this port's NPE channel talks on the selected time slot and never crosses over to time slots reserved for other connections. If the NPE is not working correctly, one-way and noisy connections may be observed. This test is part of a port's Long Test Sequence and takes approximately 20 to 30 seconds to complete. Crosstalk testing is performed on both B-channels (B1 and B2) associated with a BRI port. If this test fails on either channel, any endpoints connected to the port are taken out-of-service.

This test is not executed for ABRI-PORT/ATT-PORT/LGATE-PT/ATTE-PT because the B-channels associated with the port are not used by ASAI or AT&T adjuncts

Table 9-46. TEST #617 NPE Crosstalk Test

Error Code	Test Result	Description/ Recommendation
1000	ABORT	System resources required to run this test are not available. The port may be busy with a valid call. Use the **display port PCSSpp** command to determine the station extension or trunk group/member number of the port. Use the **status bri-port PCSSpp** command to determine the service state of the port. If the service state indicates that the port is in use, then the port is unavailable for certain tests. (Refer to the "Status Commands'' section in Chapter 8, "Maintenance Commands", for a full description of all possible states.) Wait until the port is idle before retesting. 1. If the port status is idle, then retry the command at one-minute intervals a maximum of five times. 2. If the test continues to abort, escalate the problem.

Continued on next page

Table 9-46. TEST #617 NPE Crosstalk Test — *Continued*

Error Code	Test Result	Description/ Recommendation
1004	ABORT	The port has been seized by a user for a valid call. Use the **status station** command for the station associated with this port and determine when the port is available for testing. 1. Retry the command at one-minute intervals a maximum of five times. 2. If the test continues to abort and the port is not in use, escalate the problem.
1005	ABORT	This test is not valid for this type of translation. Ports administered as “ASAI” or “ADJK” can not run this test, because the B channels associated with the port are not used by ASAI or AT&T Adjunct Links. This is a normal condition.
2012	ABORT	Internal System Error.
2100	ABORT	Could not allocate the necessary resources to run this test. 1. Retry the command at one-minute intervals a maximum of five times. 2. If the test continues to abort, escalate the problem.
1 2	FAIL	The NPE of the tested port was found to be transmitting in error. This causes noisy and unreliable connections. Error code 1 indicates that the NPE Crosstalk Test failed on Channel B1. Error code 2 indicates that the NPE Crosstalk Test failed on Channel B1. Replace circuit pack.
	PASS	The port is correctly using its allocated time slots. 1. To be sure that this is not an intermittent problem, repeat this test a maximum of 10 times to make sure it continues to pass. 2. If complaints still exist, examine the station, connections, and wiring.

BRI Port Local LAN Loop Around Test (#618)

This test is destructive.

This test, which verifies the connectivity of a BRI port across the LAN Bus, executes only if the port is out-of-service. The test aborts if calls associated with the port are in-progress. Failures of this test indicate either on-board faults associated with the BRI-PORT hardware on the circuit pack, or problems with the LAN Bus, which is used to form connectivity between the switch and the BRI-PORT.

The dotted lines in the following figure show how a Loop Around Test is performed across the Packet Bus for the D-channel.

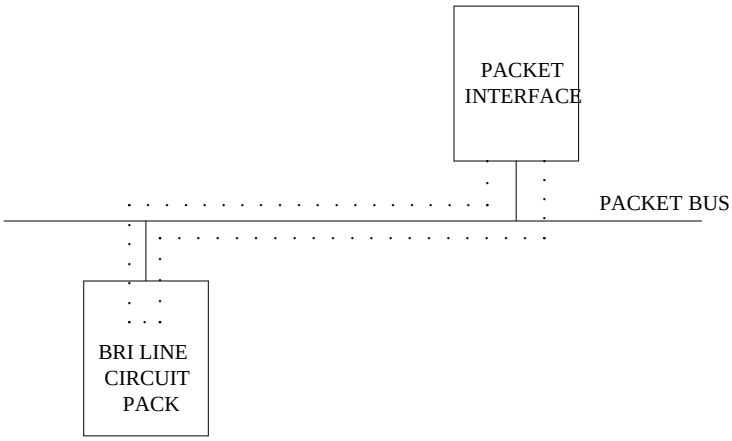

Figure 9-5. Path of the BRI Port Local LAN Loop Around

Table 9-47. BRI Port Local LAN Loop Around

Error Code	Test Result	Description/ Recommendation
1015	ABORT	The port is not in the out-of-service state. 1. Display the BRI Port Status form via the **status bri-port PCSSpp** command to determine which stations or adjuncts are on this port. 2. Use the extension shown on this form in the **status station** command to determine if the station or adjunct is in use. 3. If it is in use, wait until it is idle, and then busyout the port (using the **busyout port PCSSpp** command) to place it in the out-of-service state and repeat this test. **WARNING:** *Since the "busyout" command is destructive, execution of this command prior to the port being idle causes all calls associated with BRI endpoints and all transactions associated with ASAI or AT&T adjuncts on the port to be torn down. Note that third party calls established by an ASAI or AT&T adjunct remain connected even though the port is taken out-of-service.*
1139	ABORT	The Packet Bus in the port network is out-of-service. 1. Follow the repair procedures for the Packet Bus. 2. After completing Step 1, execute the **test port long PCSSpp** command, and review the results of the BRI Port Local LAN Loop Around Test to verify the repair.
1141	ABORT	The PKT-CTRL is out-of-service. 1. Follow the repair procedures for the PKT-CTRL. 2. After completing Step 1, execute the **test port long PCSSpp** command, and review the results of the BRI Port Local LAN Loop Around Test to verify the repair.

Continued on next page

Table 9-47. BRI Port Local LAN Loop Around — *Continued*

Error Code	Test Result	Description/ Recommendation
1144	ABORT	The PPN Packet Bus is out-of-service. 1. Follow the repair procedures for the Packet Bus. 2. After completing Step 1, execute the **test port long PCSSpp** command, and review the results of the BRI Port Local LAN Loop Around Test to verify the repair.
2012	ABORT	Internal System Error.
2100	ABORT	Could not allocate the necessary system resources to run this test. 1. Retry the command at one-minute intervals a maximum of five times. 2. If the test continues to abort, escalate the problem.
	FAIL	The Loop Around Test has failed. 1. If the test fails repeatedly, attempt to reset the circuit pack if the other ports on the board are not in use. Reset the circuit pack by issuing the **busyout board PCSS** and the **reset board PCSS** commands. 2. If the test fails again, execute **test pkt P** on the G3MT terminal. If this fails, follow failure procedures in PKT-BUS section. 3. If tests executed in Step 2 pass, the problem is local to the BRI board. Replace the circuit pack.
	PASS	The BRI Port Local LAN Loop Around Test has passed.

BRI Port Local TDM Loop Around Test (#619)

This test is destructive.

This test verifies the connectivity of a BRI port across the TDM Bus. It aborts if calls associated with the port are in progress. Failure of this test indicates an on-board fault associated with the port hardware on the circuit pack.

This Loop Around Test runs a series of individual tests on the two B-channels (B1 and B2) associated with the port. It is a collection of the following:

- A Loop Around Test across the TDM Bus for B1.
- A Conference Circuit Test for B1.
- A Loop Around Test across the TDM Bus for B2.
- A Conference Circuit Test for B2.

The tests are run in the above order. If one fails, the remaining tests in the sequence are not executed. An error code is returned at that point.

This test is not executed for ABRI-PORT/ATT-PORT/LGATE-PT/ATTE-PT because the B-channels associated with the port are not used by ASAI or AT&T adjuncts.

The dotted lines in the following figure show how a Loop Around Test is performed for the B-channels. The figure shows a terminal connected to a BRI line board using a TN556. If a TN2198 is used the terminal would be connected to a NT1, and the NT1 to the BRI board.

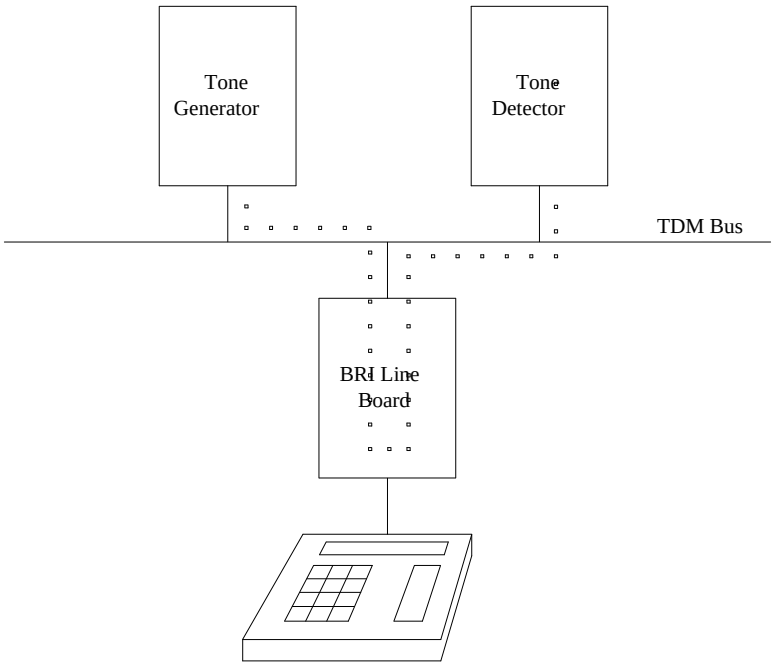

Figure 9-6. Path of the BRI Port Local TDM Loop Around

Table 9-48. BRI Port Local TDM Loop Around

Error Code	Test Result	Description/ Recommendation
1000	ABORT	The system resources required to run this test are not available. The port may be busy with a valid call. Use the **display port PCSSpp** command to determine the station extension or trunk group/member number of the port. Use the **status bri-port PCSSpp** command to determine the service state of the port. If the service state indicates that the port is in use, then the port is unavailable for certain tests. (Refer to the “Status Commands’’ section in Chapter 8, "Maintenance Commands", for a full description of all possible states.) Wait until the port is idle before retesting. 1. If the port is idle, then retry the command at one-minute intervals a maximum of five times. 2. If the test continues to abort, escalate the problem.
1002	ABORT	The system could not allocate time slots for the test. The system may be under heavy traffic conditions or it may have time slots out-of-service due to TDM-BUS errors. Refer to TDM-BUS (TDM Bus) Maintenance documentation to diagnose any active TDM Bus errors. 1. If the system has no TDM-BUS errors and is not handling heavy traffic, repeat test at one-minute intervals a maximum of five times. 2. If the test continues to abort, escalate the problem.
1003	ABORT	The system could not allocate a tone receiver for the test. The system may be oversized for the number of Tone Detectors present or some Tone Detectors may be out-of-service. 1. Look for TTR-LEV errors in the Error Log. If present, refer to TTR-LEV (TTR Level) Maintenance documentation. 2. Look for TONE-PT errors in the Error Log. If present, refer to TONE-PT (Tone Generator) Maintenance documentation. 3. If neither condition exists, retry the test at one-minute intervals a maximum of five times. 4. If the test continues to abort, escalate the problem.

Continued on next page

Table 9-48. BRI Port Local TDM Loop Around — *Continued*

Error Code	Test Result	Description/ Recommendation
1004	ABORT	The port has been seized by a user for a valid call. Use the **status station** command for the station associated with this port and determine when the port is available for testing. 1. Retry the command at one-minute intervals a maximum of five times. 2. If the test continues to abort and the port is not in use, escalate the problem.
1005	ABORT	This test is not valid for this type of translation. Ports administered as “ASAI” or “ADJK” can not run this test, because the B channels associated with the port are not used by ASAI or AT&T Adjunct Links. This is a normal condition.
2000	ABORT	Response to the test was not received from the BRI-LINE circuit pack within the allowable time period. 1. If this result occurs repeatedly, attempt to reset the circuit pack if the other ports are not in use. Reset the circuit pack by issuing the **busyout board PCSS** and the **reset board PCSS** commands. 2. If this result occurs again, replace the circuit pack.
2012	ABORT	Internal System Error.
2100	ABORT	Could not allocate the necessary resources to run this test. 1. Retry the command at one-minute intervals a maximum of five times. 2. If the test continues to abort, escalate the problem.
2103	ABORT	The system could not make the conference connection for the test. 1. Retry the command at one-minute intervals a maximum of five times. 2. If the test continues to abort, escalate the problem.

Continued on next page

Table 9-48. BRI Port Local TDM Loop Around — *Continued*

Error Code	Test Result	Description/ Recommendation
1 2	FAIL	As stated previously, this test runs a TDM Loop Around Test on each B-channel. This indicates that the loop around failed on one of the channels. Error Code 1 indicates that the TDM Loop Around Test failed on B1. Error Code 2 indicates that the TDM Loop Around Test failed on B2.
7 8	FAIL	As stated previously, this test runs a Conference Circuit Test on each B-channel. A failure here indicates that one of these conference tests failed; Error Code 7 means that the test failed on B1; Error Code 8 means that the test failed on B2. 1. If the test fails repeatedly, attempt to reset the circuit pack if the other ports on the circuit pack are not in use. Reset the circuit pack by issuing the **busyout board PCSS** and the **reset board PCSS** commands. 2. If the test fails again, replace the circuit pack.
	PASS	The BRI Port Local TDM Loop Around Test has passed.

Electronic Power Feed Restoral Test (#620)

This test attempts to restore the Electronic Power Feed (EPF) on an ISDN-BRI port twice. In this test, the processor requests that the EPF be turned on for a given port. An attempt is made to turn on the power unit to the station or adjunct. If no current is being drawn by a station, this probably indicates that the station is not connected. No current being drawn by an adjunct is the normal condition. If an overcurrent condition is sensed (that is, too much current is being drawn), this condition may indicate a short in the wiring to the endpoint or adjunct. Depending on what condition is sensed, a message is returned stating that either the EPF was turned on successfully with no problems or that an overcurrent condition is sensed. This response is reported by the Electronic Power Feed Inquiry (#622), which follows in the testing sequence. EPF Restoral is attempted again by this test five seconds later. This test always passes for the TN2198 because it has no EPF. This test will always abort when run on the TN566.

Table 9-49. TEST #620 Electronic Power Feed Restoral

Error Code	Test Result	Description/ Recommendation
1005	ABORT	This test is not valid for this port type. The TN566 does not have an electronic power feed, and the test will abort.
2012	ABORT	Internal System Error. 1. Retry the command at one-minute intervals a maximum of five times. 2. If the test continues to abort, escalate the problem.
	PASS	The EPF Test passed. The message to turn on the power feed to the station or the adjunct was successfully sent to the port. 1. Although this test should not return a fail result, after running this test, the Error Log should be checked for any entries with error type 257 to examine the real results of this test. 2. An error type of 257 in the Error Log indicates some problem with the power to the station or the adjunct. Check for a short in the wiring, a damaged jack, a defective voice terminal or adjunct, or an incorrect type of terminal.

Level 1 Status Inquiry Test (#621)

This test determines the state of the transmission facility of a BRI port at the physical layer (that is, Level 1). Level 1 can be in one of three possible states: Activated, Pending Activation, or Deactivated.

The Activated state is the correct state for an ISDN-BRI port. In this state the Level 1 interface can communicate with the BRI endpoint or ASAI or AT&T adjunct administered on this port. This test passes if the state of Level 1 (L1) is Activated. This test also passes if software has taken this port out of service. See the description of the Level 1 ''Deactivated State'' below for more details.

The Pending Activation state indicates a problem with the endpoints or adjunct, the wiring to the sets or adjunct, or the BRI-LINE circuit pack. When in this state, the Level 1 interface is either not receiving any L1 framing from the endpoint or adjunct (Endpoint Idle), or it is communicating with the endpoint or adjunct but cannot transition to the Activated state (Endpoint Active).

The Deactivated state indicates a problem with the BRI-LINE circuit pack. When in this state, the Level 1 interface is idle and is not trying to communicate with the BRI endpoints or adjunct. When an ISDN-BRI port is placed in the out-of-service state, Level 1 is also put into the Deactivated state.Thiscouldbedue either to the system detecting a fault with the port or to a **busyout port PCSSpp** request This could be due either to the system detecting a fault with the port or to a **busyout port PCSSpp** request

Table 9-50. TEST #621 Level 1 Status Inquiry

Error Code	Test Result	Description/ Recommendation
1187	ABORT	The board, port or station may have been busied out by a technician. 1. Look in the Error Log for Error Type 18 (port busied out) for this port and BRI-BD (board busied out). If this error type is present for BRI-PORT only, then release the port via the **release port pp** command and run the test again. If the error is present for both BRI-BD and BRI-PORT, then release the board via the **release port PCSS** command and run the test again. **NOTE:** When you release a port, you release all ports associated with it. If certain ports still need to be busied out, use the **release port PCSSpp** command to busy them out. 2. Make sure the terminal is connected. 3. Retry the command at one-minute intervals a maximum of five times. 4. If the test continues to abort, escalate the problem.
2000	ABORT	Response to the test was not received from the circuit pack within the allowable time period. 1. If the test aborts repeatedly a maximum of five times, reset the circuit pack via the **busyout board PCSS** and **reset board PCSS** commands. 2. If the test aborts again, replace the circuit pack.
2012	ABORT	Internal System Error.
2100	ABORT	Could not allocate the necessary system resources to run this test. 1. Retry the command at one-minute intervals a maximum of five times. 2. If the test continues to fail, escalate the problem.

Continued on next page

Table 9-50. TEST #621 Level 1 Status Inquiry — *Continued*

Error Code	Test Result	Description/ Recommendation
1	FAIL	Received a status of Level 1 Pending Activation-Endpoint Idle which indicates a problem with the BRI endpoint or ASAI or AT&T adjunct, the wiring to the endpoint or adjunct, or the ISDN-BRI port. For the TN2198, received a status of Level 1 Pending Activation. U interface down, which indicates a problem with a connection between the switch and the NT1. **NOTE:** An NT1 is a 2-to-4 wire converter that is used to connect 4-wire AT&T terminals to a 2-wire TN2198 circuit pack. The NT1 also has status lamps to determine the health of the unit. 1. For the TN556, verify that an end point is connected to the port. If an endpoint is connected to the port then proceed to step 2. For the TN2198 verify that the connections are good between the switch and the NT1. Verify that the NT1 has power. 2. As necessary, check and repair the wiring between the circuit pack and the endpoint or adjunct. If a TN2198 is used the set must have been plugged in for at least 15 seconds before it will stabilize. Execute the **test port PCSSpp** command, and review the results of the Level 1 Status Inquiry Test to verify the repair. If this test is still failing, proceed to Step 3. 3. For BRI endpoints, replace the BRI endpoint(s) connected to the port or the NT1 if a TN2198 is used. For ASAI or AT&T adjuncts, follow the recommended repair procedures of the manufacturer for link communication problems. For the NT1, follow the manufacturers repair procedures. Then execute the **test port PCSSpp** command and review the results of the Level 1 Status Inquiry Test to verify repair. If this test is still failing, proceed to Step 4. 4. Escalate the problem to the next tier.

Continued on next page

Table 9-50. TEST #621 Level 1 Status Inquiry — *Continued*

Error Code	Test Result	Description/ Recommendation
2	FAIL	For the TN556 or TN566, received a status of Level 1 Pending Activation-Endpoint Active which indicates a problem with the BRI endpoint or ASAI or AT&T adjunct, the wiring to the endpoint or adjunct, or the ISDN-BRI port. For the TN2198, received a status of Level 1 Pending Activation. U interface up S/T interface down, which indicates a problem with the NT1 or the wiring between the NT1 and the BRI endpoint (S/T interface). 1. As necessary, check and repair the wiring between the circuit pack and the endpoint or adjunct. Execute the **test port PCSSpp** command, and review the results of the Level 1 Status Inquiry test to verify the repair. If this test is still failing, proceed to Step 2. 2. For BRI endpoints, try replacing the BRI endpoint(s) connected to the port. For ASAI or AT&T adjuncts, follow the recommended repair procedures of the manufacturer for link communication problems. For the NT1, follow the recommended repair procedures of the manufacturer. Then execute the **test port PCSSpp** command, and review the results of the Level 1 Status Inquiry test to verify repair. If this test is still failing, proceed to Step 3. 3. Escalate the problem to the next tier.

Continued on next page

Table 9-50. TEST #621 Level 1 Status Inquiry — *Continued*

Error Code	Test Result	Description/ Recommendation
3	FAIL	Received a status of Level 1 Deactivated; the port is out-of-service. 1. Issue the **status bri-port PCSSpp** command to verify that the service state of the port is out-of-service. If the service state of the port is not out-of-service, escalate the problem to the next tier. Otherwise, proceed to Step 2. 2. If the port has been placed out-of-service via the **busyout port PCSSpp** command, try releasing the port by executing the **release port PCSSpp** command. Then issue the **test port long PCSSpp** command, and review the results of Level 1 Status Inquiry test. If this test is still failing, proceed to Step 3. 3. After executing the **test port long PCSSpp** command, review the results of all the tests. Follow the repair procedures for any tests that fail. Verify repair of the problem by executing the **test port PCSSpp** command and by determining that the Level 1 Status test passes. If the test continues to fail for this reason, proceed to Step 4. 4. Escalate the problem to the next tier.
4	FAIL	For the TN2198 only: Received a status of Level 1 Pending Activation, the NT1 has a loss of power indicating a problem with the NT1. 1. For the NT1 follow the manufacturers recommended repair procedures. 2. Execute the **test port PCSSpp** command, and review the results of the Level 1 Status Inquiry test to verify the repair. If the test is still failing proceed to Step 3. 3. Escalate the problem to the next tier.
	PASS	This test indicates that Level 1 is activated, or that software has taken the port out of service.

Electronic Power Feed Inquiry (#622)

This test queries the BRI-LINE circuit pack for the status of the Electronic Power Feed (EPF) supplied to a BRI endpoint or an ASAI or AT&T adjunct. If the EPF is on and no overcurrent condition exists, this test passes. All other states are not normal and indicate a problem with the endpoint or adjunct, the wiring to the endpoint or adjunct, or the BRI-LINE circuit pack. This test is not run on the TN566 circuit pack or the TN2198 and will always return a pass for the TN2198. The TN566 has no power feeds.

Table 9-51. Electronic Power Feed Inquiry

Error Code	Test Result	Description/ Recommendation
1005	ABORT	This test is not valid for this port type. Ports on the TN566 can not run this test because this board does not have an electronic power feed.
2000	ABORT	Response to the test was not received from the circuit pack within the allowable time period. 1. If the test aborts repeatedly a maximum of five times, reset the circuit pack via the **busyout board PCSS** and **reset board PCSS** commands. 2. If the test aborts again, replace the circuit pack.

Continued on next page

Table 9-51. Electronic Power Feed Inquiry — *Continued*

Error Code	Test Result	Description/ Recommendation
2012	ABORT	Internal System Error.
2100	ABORT	Could not allocate the necessary system resources to run this test. 1. Retry the command at one-minute intervals a maximum of five times. 2. If the test continues to abort, escalate the problem.
1	FAIL	The BRI-LINE circuit pack reports that it has detected an overcurrent condition and has turned off the EPF. 1. As necessary, check and repair the wiring between the circuit pack and the endpoint or adjunct. Check the endpoints and replace one or both sets if the sets are drawing too much current. Execute the **test port PCSSpp** command and review the results of the EPF Inquiry Test to verify the repair. If this test is still failing, proceed to Step 2. 2. Execute the **test port PCSSpp** command, and review the results of the Level 1 Status Inquiry Test. If this test is also failing, then follow the repair procedure for the Level 1 Status Inquiry Test. Otherwise, escalate this problem to the next tier.
	PASS	The Electronic Power Feed Inquiry Test reports that the EPF is on.

Layer 1 Transmission Error Counter Test (#624)

This test reads and clears the BRI port's Layer 1 Transmission error counter maintained on the BRI-LINE circuit pack. This counter is incremented by the circuit pack when it detects a Layer 1 transmission problem. The test passes if the value of the counter is 0 (that is, the error is cleared). If the counter is not zero, the test fails, and the value of the counter is displayed in the Error Code field.

This error is most likely due to a problem with the wiring or the endpoint or adjunct (verify that the wiring meets the configuration rules defined in *DEFINITY Communications System Generic 1 and Generic 3i Wiring*, 555-204-111. It does not indicate a problem with the ISDN-BRI circuit pack. This test is useful for verifying the repair of the problem.

Table 9-52. TEST #624 Layer 1 Transmission Error Counter Test

Error Code	Test Result	Description/ Recommendation
2000	ABORT	Response to the test was not received from the circuit pack within the allowable time period. 1. If the test aborts repeatedly a maximum of five times, reset the circuit pack via the **busyout board PCSS** and **reset board PCSS** commands. 2. If the test aborts again, replace the circuit pack.
2012	ABORT	Internal System Error.
2100	ABORT	Could not allocate necessary system resources to run test. 1. Retry the command at one-minute intervals a maximum of five times. 2. If the test continues to fail, escalate the problem.

Continued on next page

Table 9-52. TEST #624 Layer 1 Transmission Error Counter Test — *Continued*

Error Code	Test Result	Description/ Recommendation
value	FAIL	The BRI-LINE circuit pack is still detecting errors of this type. The Error Code field contains the value of this counter. 1. Retry the command at one-minute intervals a maximum of five times. 2. If the test continues to fail, review the results of other tests in the Long Test Sequence. Pay particular attention to the results of the Level 1 Status Inquiry test. Follow repair procedures for any of the executed tests if they fail. Otherwise, go to the next step. 3. If the tests for the endpoints or adjunct pass and the Layer 1 Transmission Error Counter Test continues to fail, check the wiring to the endpoints or adjunct. If the wiring appears to be fine, escalate the problem.
	PASS	The Layer 1 Transmission error counter was read correctly and has a value of 0.

Receive FIFO Overflow Error Counter Test (#625)

This test reads and clears the BRI port's Receive FIFO Overflow error counter maintained on the BRI-LINE circuit pack. This counter is incremented by the circuit pack when it detects an overflow of its receive buffers. The test passes if the value of the counter is 0 (that is, the error is cleared). If the counter is non-zero, the test fails, and the value of the counter is displayed in the Error Code field.

This error can occur if signaling frames are being received from the Packet Bus at a rate sufficient to overflow the receive buffers on the circuit pack for a port OR if a hardware fault is causing the receive buffers not to be emptied properly by the circuit pack. This test is useful for verifying the repair of the problem.

Table 9-53. TEST #625 Receive FIFO Overflow Error Counter Test

Error Code	Test Result	Description/ Recommendation
2000	ABORT	Response to the test was not received from the circuit pack within the allowable time period. 1. If the test aborts repeatedly a maximum of five times, reset the circuit pack via the **busyout board PCSS** and **reset board PCSS** commands. 2. If the test aborts again, replace the circuit pack.

Continued on next page

Table 9-53. TEST #625 Receive FIFO Overflow Error Counter Test — *Continued*

Error Code	Test Result	Description/ Recommendation
2012	ABORT	Internal System Error.
2100	ABORT	Could not allocate the necessary system resources to run this test. 1. Retry the command at one-minute intervals a maximum of five times. 2. If the test continues to fail, escalate the problem.
value	FAIL	The BRI-LINE circuit pack is still detecting errors of this type. The Error Code field contains the value of this counter. 1. Retry the command at one-minute intervals a maximum of five times. 2. If the test continues to fail, run the Long Test Sequence and pay particular attention to the Loop Around Tests (#618 and #619). See the repair procedures for the executed test if it fails. Otherwise, go to the next step. 3. Replace the circuit pack.
	PASS	The Receive FIFO Overflow error counter was read correctly and has a value of 0.

Clear Error Counters Test (#270)

This test is not an actual test in the strict sense of the word. There are various error counters associated with each BRI-PORT/ABRI-PORT/ATT-PORT/LGATE-PT/ATTE-PT. This test clears those counters and triggers the auditing of Terminal Endpoint Identifier (TEI) values and layer 3 reinitialization. This test is used only to send messages to the BRI-PORT/ABRI-PORT/ATT-PORT/LGATE-PT/ATTE-PT and, therefore, should neither abort nor fail

Table 9-54. TEST #270 Clear Error Counters

Error Code	Test Result	Description/ Recommendation
Any	ABORT	This test should never abort.
Any	FAIL	This test should never fail. 1. Retry the command at one-minute intervals a maximum of five times. 2. If the test continues to fail, escalate the problem.
	PASS	The message to clear the error counters of the BRI-Port/ABRI-Port/ATT-PORT/LGATE-PT/ATTE-PT has been sent.

BRI-SET, ASAI-ADJ, BRI-DAT

MO Name As It Appears in Alarm Log	Alarm Level	Initial System Technician Command to Run (a)	Full Name of MO
BRI-SET BRI-DAT	WARNING(b)	test station extension l, test data-module extension	ISDN-BRI Set
ASAI-ADJ	MAJOR(b)	test station extension	ASAI-Adjunct
ASAI-ADJ	MAJOR(b)	test data-module extension	ASAI-Adjunct
ASAI-ADJ	WARNING(c)	test data-module extension	ASAI-Adjunct
ATT-ADJ	MAJOR(b)	test station extension	AT&T-Adjunct
ATT-ADJ	MAJOR(b)	test station extension	AT&T-Adjunct
ATT-ADJ	WARNING(c)	test station extension	AT&T-Adjunct
LGATE-AJ	MAJOR(b)	test station extension	Ethernet ASAI-Adjunct
LGATE-AJ	MAJOR(b)	test station extension	Ethernet ASAI-Adjunct
LGATE-AJ	WARNING(c)	test station extension	Ethernet ASAI-Adjunct
ATTE-AJ	MAJOR(b)	test station extension	Ethernet AT&T-Adjunct
ATTE-AJ	MAJOR(b)	test station extension	Ethernet AT&T-Adjunct
ATTE-AJ	WARNING(c)	test station extension	Ethernet AT&T-Adjunct

a. UU is the universal cabinet number (1 for PPN, 2 -44 for EPNs). C is the carrier designation (A, B, C, D, or E). SS is the number of the slot in which the circuit pack resides (01 to 21). pp is the two digit port number (01, 02, ...).

b. The alarm level for ASAI and AT&T adjuncts may be administered using the **set options** command. The alarm level can be set independently for Off-Board and On-Board alarms to WARNING, MINOR, or MAJOR for all ASAI and AT&T adjuncts in the system.

c. Alarming for an ASAI and AT&T adjuncts is disabled if the adjunct asks the switch to suspend maintenance. When this occurs, an error and a WARNING alarm are logged against the endpoint. Busying out and releasing the ASAI station or ADJLK station will clear the alarm.

CAUTION:

A detailed flowchart for isolating and resolving Packet Bus faults is included in Chapter 9, "Maintenance Object Repair Procedures", "Packet Bus Fault Isolation and Correction." This flowchart, along with the other information

presented in the chapter, can help in resolving problems that involve more than a single station or circuit pack. Whenever the repair procedures for this Maintenance Object refer to Packet Bus and/or Packet Control maintenance, be sure to reference Chapter 9, "Maintenance Object Repair Procedures", "Packet Bus Fault Isolation and Correction" in addition to the relevant MO documentation.

WARNING:

If a significant Packet Bus failure occurs, errors and alarms may not be logged as expected for BRI-SET/BRI-DAT/ASAI-ADJ/ATT-ADJ/LGATE-AJ/ATTE-AJ. Conditions under which this occurs are detailed in the "Maintenance of the Packet Bus" section of Chapter 9, "Maintenance Object Repair Procedures", "Packet Bus Fault Isolation and Correction."

The TN566 ESAI MFB provides DEFINITY with an Ethernet interface to Adjunct-Switch Application Interface (ASAI) and AT&T adjuncts (for example, CONVERSANT® Voice System). This circuit pack contains 8 ports of line circuit interface, each of which operates with two B-channels (referred to as B1 and B2 throughout this section) and one D-channel as specified in the AT&T ISDN-BRI Specification. In this context, the term ``ISDN-BRI port'' is used to refer collectively to ports on the TN566 MFB circuit pack which is connected to ASAI or AT&T adjuncts. The TN566 ESAI MFB is handled by switch software as it is an ISDN BRI compatible board and all maintenance actions referring to ASAI and AT&T Adjunct Links in this section apply.

In G3iV1.1-286 and G3iV2-386, two types of ISDN-BRI endpoints may be connected to ISDN-BRI (ISDN Basic Rate Interface Line) TN556 and TN2198 circuit packs: ISDN-BRI station endpoints, ASAI (Adjunct-Switch Application Interface) and AT&T adjuncts (for example CONVERSANT® Voice System). These circuit packs contain 12 ports of line circuit interfaces, each of which operates at 192 kilobits per second (kbps) with two B-channels and one D-channel as specified in the AT&T ISDN-BRI specification (PUB 801-802-100). For BRI endpoints, each B-channel may support voice or circuit-switched data and may be circuit-switched simultaneously. The B-channels are not used by ASAI or AT&T adjuncts. The D-channel is used for conveying signaling between the switch and a BRI endpoint(s) or ASAI or AT&T adjuncts. Each ISDN-BRI D-channel is connected to the switch processor and the ISDN-BRI port through the PKT-CTRL (Packet Control) and the PKT-BUS (Packet Bus).

ISDN-BRI endpoints come in a number of configurations. All endpoints require the D-channel to convey signaling information to the switch. A voice-only set requires only one B-channel. A voice and data-capable set requires both

B-channels (one for voice and one for data). Therefore, each TN556 port can support either two voice-only sets or one voice and data-capable set. Only a single ASAI or AT&T adjunct may be connected to an ISDN-BRI port. Multiple adjuncts per line are not supported.

The following figure illustrates the physical connection (solid line) between an ISDN-BRI Circuit Pack and a voice or voice/data set. Each physical connection allows for two B-channels, as stated above, plus one D-channel. Each ISDN-BRI circuit pack can support up to 12 of these PHYSICAL connections to different voice and voice/data sets or ASAI and AT&T adjuncts.

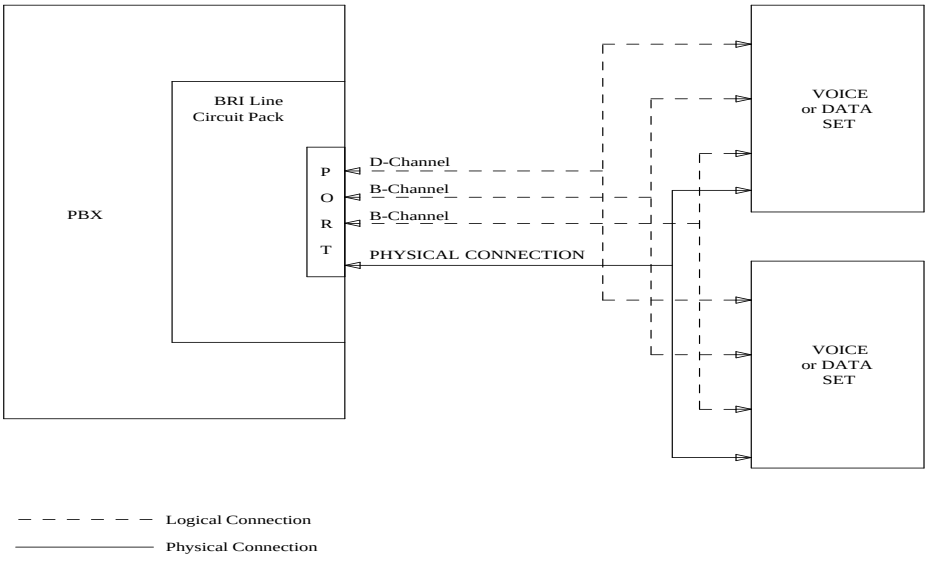

Figure 9-7. ISDN-BRI Set Interactions

This section contains the ISDN-BRI Set, ASAI Adjunct and AT&T Adjunct Maintenance documentation. Some of the results of maintenance testing of the ISDN-BRI Set or the ASAI and AT&T Adjunct may be affected by the health of the ISDN-BRI circuit pack and Port. These interactions should be kept in mind when investigating the cause of ISDN-BRI Set problems.

Hardware Error Log Entries and Test to Clear Values

Table 9-55. BRI-SET/ASAI-ADJ Error Log Entries

Error Type	Aux Data	Associated Test	Alarm Level BBRI-SET	Alarm Level ASAI-ADJ ASAI-ADJ ATT-ADJ LGATE-AJ ATTE-AJ	On/Off Board	Test to Clear Value
0*	0	Any	Any	Any	Any	test BRI-SET or ASAI-ADJ ATT-ADJ ESIA-ADJ EATT_ADJ
2(a)	2-10 2	None				
18	0	busyout station ext	WARNING	MAJOR/ WARNING†	OFF	release station <ext>
130(b)			WRN		ON	test port PCSS sh
257(c)	Any	BRI Layer 3 Query (#629)	WARNING	MAJOR/ WARNING†	OFF	test station ext r 2 test data-module ext r 2
351(d)	0	None		WARNING	OFF	busyout and release station
513(e)	0	None				
769(f)	0	None	WARNING	MAJOR	OFF	
2561 (g)	0	None				
2562-2566(h)	0	None				
2567 (o)	0	None				
2568 (p)	0	None				

Continued on next page

Table 9-55. BRI-SET/ASAI-ADJ Error Log Entries — *Continued*

Error Type	Aux Data	Associated Test	Alarm Level BBRI-SET	Alarm Level ASAI-ADJ ASAI-ADJ ATT-ADJ LGATE-AJ ATTE-AJ	On/Off Board	Test to Clear Value
2817(i)	0	XID Test (#628)	WARNING	MAJOR/ WARNING†	OFF	test station ext r 2 test data-module ext r 2
3073(j)	0	BRI Remote Loop Back (#627)	WARNING		OFF	test station ext l r 2 test data-module ext l r 2
3329 (k)	Any	Signaling Link Status (626)	WARNING	MAJOR/ WARNING†	OFF	
3584	0,1	None				
3585-3839(i)	0	None				
3840-4095 (m) (n)	0	None				

* Run the Short Test Sequence first. If all tests pass, run the Long Test Sequence. Refer to the appropriate test description and follow the recommended procedures.

† Major alarms on this MO may be downgraded to Warning alarms based on the value used in the set options command.

Notes:

a. Errors of this type indicate violations of the ISDN-BRI signaling protocol; timers associated with certain Layer 3 messages have expired before a required response was received. In the following table, the aux data field indicates which timer has just expired. (For more information, refer to the AT&T ISDN-BRI Specification.)

Aux Data	Timer Type
2	First T303 (SETUP timer)
3	Second T303 (SETUP timer)
4	T305 (DISConnect timer)
5	First T308 (RELease timer)
6	Second T308 (RELease timer)
10	T316 (RESTart timer)
12	T309 (Layer 2 Failure timer)
16	TM100 (Management Information Message timer 1)
17	TM200 (Management Information Message timer 2)
102	TASAI (ASAI Routing Timer)

The switch sent a message to the endpoint which did not respond in the allotted time. This can happen occasionally due to failure of the point-to-point signaling link or because of a problem in the BRI endpoint or ASAI adjunct or AT&T adjunct. Execute the **test station extension sh** command and pay particular attention to the results of the BRI Layer 3 Query Test (#629). If this test fails, follow the repair procedure for Test #629.

b. This error type indicates that the circuit pack has been removed or has been insane for more than 11 minutes. To clear the error, replace or reinsert the circuit pack.

c. This error occurs when the endpoint does not respond to the service state query message sent to the adjunct or the endpoint. This error causes an alarm to be raised. The alarm is retired when the switch receives a response to the service state query to the endpoint or the adjunct.

For BRI endpoints, the Aux Data field for this error contains ‘‘0.’’ When it occurs, execute the **test station extension sh** command and pay particular attention to the results of the BRI Layer 3 Query Test (#629). If this test fails, follow the repair procedure for Test #629.

When this error occurs for an ASAI or AT&T adjunct, the Aux Data field indicates the state of the ASAI link or AT&T link and whether an invalid response or no response was received to the query from the switch, as shown in the following table:

Aux Data	ASAI Link State	Error
102	13-restarting	No response to RESTART message
104	13-restarting	Invalid response to RESTART message
152	13-restarted	No response to Layer 3 query
154	13-restarted	Invalid response to Layer 3 query
202	13-established	No response to Layer 3 query
204	13-established	Invalid response to Layer 3 query

(See "Status BRI-Port" in Chapter 8, "Maintenance Commands", for an explanation of the ASAI link states.)

For ASAI or AT&T adjuncts, the switch automatically queries the adjunct every two minutes (and therefore the Layer 3 Query Test is not executed for ASAI or AT&T adjuncts via a command issued from the G3MT terminal). While alarmed for this error, the switch momentarily (for five seconds) takes the associated port out-of-service every 15 minutes. This action is taken in an attempt to stimulate recovery actions to be taken by the adjunct.

When this error occurs for an ASAI or AT&T adjunct, the service technician should:

1. Execute the **test station extension** command and pay particular attention to any tests which fail and perform the associated repair procedures for those tests.
2. Check the health of the adjunct by following the recommended repair procedures of the manufacturer of the adjunct if the preceding step does not resolve the problem.
3. The alarm condition persists and, if the above steps do not resolve the problem, follow normal escalation procedures.

d. This error and associated WARNING alarm are logged against an ASAI or AT&T endpoint when the adjunct has asked the switch to suspend Maintenance on the ASAI or AT&T endpoint. Busying out and releasing the ASAI station or ADJLK station will clear this alarm.

e. This error occurs when the endpoint sends more messages than the switch can handle. The switch suspends the reception of messages from the endpoint for a short period of time. There is no repair procedure for this error. If the condition persists, replace the endpoint.

f. This error occurs when the signaling link associated with a BRI endpoint has too much link establishment related traffic. This could occur if the signaling link is bouncing between assigned and established states. Software will suspend activity to this endpoint for 75 minutes when the endpoint is alarmed due to this problem (note that service suspension does not occur if the endpoint is an ASAI or AT&T adjunct). If this problem persists, replace the endpoint. If replacing the endpoint does not fix the problem, follow normal escalation procedures.

g. This error occurs when the ASAI-ADJ or ATT-ADJ or LGATE-AJ or ATTE-AJ message is not transmitted because the PKT-CTRL (Packet Control Circuit Pack) transmit buffers are exhausted. Frequent or persistent occurrence of these events may indicate a hardware problem or traffic overload on the PKT-CTRL, the signaling link, or the ASAI or AT&T adjunct. Attempt to resolve the problem by following the repair procedures for the PKT-CTRL. If these attempts fail, the problem should be escalated because re-engineering of the traffic on the PKT-CTRL, signaling link, or adjunct may be necessary.

h. This error occurs when the ASAI message is not transmitted because the transmit buffer for the ASAI link is full, causing the link to be flow controlled. Frequent or persistent occurrence of these events may indicate a hardware problem or traffic overload on the PKT-CTRL, the signaling link, or the ASAI or AT&T adjunct. Attempt to resolve the problem by following the repair procedures issued by the manufacturer of the adjunct. If these attempts fail, the problem should be escalated because re-engineering of the traffic on the PKT-CTRL, signaling link, or adjunct may be necessary.

i. This error indicates a problem with Layer 2 over the D-channel between the switch and the endpoint. When this error occurs, an alarm is raised against the station or adjunct. Execute the **test station extension short** command and pay particular attention to the results of the BRI XID Test (#628). If this test fails, follow the repair procedure for Test #628.

j. This error indicates a problem with the B-channel connection between the switch and the endpoint. When this error occurs, a warning alarm is raised against the endpoint. Execute the **test station extension l** command and pay particular attention to the results of the BRI Remote Loop Back Test (#627). If this test fails, follow the repair procedure for Test #627.

k. This error occurs whenever the point-to-point signaling link to the endpoint goes down (except when it goes down because either the PKT-CTRL or the PKT-BUS has failed or has been busied out by system technician). When this error occurs, an alarm is raised against the endpoint or adjunct. Execute the **test station extension short** command and pay particular attention to the results of the Signaling Link Status Test (#626). If this test fails, follow the repair procedure for Test #626. The alarm is retired when the signaling link is reestablished to the endpoint or adjunct.

l. Certain ASAI protocol-specific cause codes are logged by switch software. The cause code can be determined from the following formula:

If the error type is greater than 3712, then the ASAI cause code is equal to the error type minus 3712. This code was sent to the adjunct by the switch.

If the error type is less than 3712, then the ASAI cause code is equal to the error type minus 3584. This code was sent to the switch by the adjunct.

A description of the various ASAI cause values is contained in the "ASAI Cause Values" table that follows. This table also contains recommended system technician actions associated with the cause value. Further information can also be found in the AT&T ASAI Specification (AT&T PUB288-500-03). In addition, the Aux Data field of the Error Log entry contains additional diagnostic information additional diagnostic.

Table 9-56. ASAI CAUSE VALUES

Error Code	Test Result	Description/ Recommendation
0	Unrecognized ASAIProtocol Operation	Requested ASAI protocol operation is not implemented by the switch or adjunct. Aux Data field of Error Log entry contains protocol identifier for unrecognized operation. 1. Consult switch and adjunct documentation to determine which set of operations is supported by the switch and the adjunct. Adjunct administration turning off operations not implemented by the switch may resolve the problem. 2. If Step 1 does not resolve the problem, escalate to the next tier.
40	Resources not available	No available internal resources to service switch or adjunct request. System transaction capacity for adjunct or switch is exceeded. 1. Re-engineering of adjunct services my be required. If problem persists, escalate problem to the next tier.

Continued on next page

Table 9-56. ASAI CAUSE VALUES — *Continued*

Error Code	Test Result	Description/ Recommendation
63	SERVICE OR OPTION NOT AVAILABLE	Requested ASAI capability or resource is not available on the switch or adjunct. More than one adjunct may be contending for the same switch resources. Potential administration mismatch between the resource domains administered on the switch and those administered on the adjunct. 1. Verify that no overlapping administration of switch resources (e.g., requesting notifications on a single domain by multiple adjuncts or multiple adjuncts attempting to control a single call) exists across all adjuncts connected to the switch. If overlaps exist, then readminister the adjuncts to guarantee that each adjunct is associated with a unique set of switch resources. 2. If Step 1 does not resolve the problem, escalate to the next tier.
79	SERVICE OR OPTION NOT IMPLEMENTED	Requested service or option (or combination of selected options) is not supported (implemented) in switch or the adjunct. 1. Consult switch and adjunct documentation to determine ASAI service and options supported by both switch and adjunct. Readministration of the switch-administered capabilities (see Customer Optional Feature Form) or those of the adjunct may be necessary to correct the problem. 2. If Step 1 does not provide the set of desired services due to deficient implementation, escalate the problem to the next tier.

Continued on next page

Table 9-56. ASAI CAUSE VALUES — *Continued*

Error Code	Test Result	Description/ Recommendation
87	Internal switch audit	There is an inconsistency in switch data records. 1. There is no action needed since the switch has corrected the data inconsistency. 2. If a number of these errors continue to occur, then escalate to next tier.

m. Certain ISDN-BRI cause codes are logged by switch software. The cause code can be determined from the following formula:

If the error type is greater than 3968, then the ISDN-BRI cause code is equal to the error type minus 3968. This code was sent to the endpoint by the switch.

If the error type is less than 3968, then the ISDN-BRI cause code is equal to the error type minus 3840. This code was sent to the switch by the endpoint.

A description of the various ISDN-BRI cause values is contained in the "ISDN-BRI Cause Values" table that follows. This table also contains recommended system technician actions associated with the cause value. Further information can also be found in the AT&T ISDN-BRI Specification (AT&T PUB 801-802-100). In addition, the Aux Data field of the Error Log entry contains additional diagnostic information.

n. Error 3847 indicates that sets on the port do not support level 3 initialization. Consult the Set Service documentation

o. For the Error 2567 indicates that the version of ASAI is not supported, check version of the software running on the ASAI or AT&T adjunct.

Table 9-57. ISDN-BRI CAUSE VALUES

Error Code	Test Result	Description/ Recommendation
1		Requested channel is in use by another station on the BRI-PORT. (Not applicable for ASAI or AT&T adjuncts.) For BRI endpoints: 1. Try to originate a call to or from this port. 2. If the error persists, busy out and release the port. 3. If the problem still persists, replace stations on the port. 4. If the problem still persists, escalate to the next tier.
34	No circuit or channel available	A resource on the switch is unavailable for a call. For BRI endpoints: This cause value is not logged. For ASAI or AT&T Adjuncts: This condition means that there are no available trunks for an outgoing call request. 1. Verify that the adjunct is administered to support the trunk capabilities of the switch. 2. Investigate trunk group status by issuing **status trunk** commands from the SAT or by requesting a trunk group query or queries from the adjunct. 3. Perform trunk diagnostic procedures outlined in this manual. 4. If step 3 does not resolve the problem, escalate to the next tier.
42	Switch Equipment Congestion	Switch takes control to limit received traffic. For BRI endpoints: This cause value is not logged. For ASAI or AT&T Adjuncts: 1. See CallVisor protocol reference manual. 2. If step 1 does not resolve the problem, escalate to the next tier.

Continued on next page

Table 9-57. ISDN-BRI CAUSE VALUES — *Continued*

Error Code	Test Result	Description/ Recommendation
50	Requested Facility Not Subscribed	Requested facility is implemented, but not administered. Potential administration problem with endpoint or adjunct. For BRI endpoints: 1. Verify the switch administration of endpoint using either the **display station** or **display data-module** commands. 2. If Step 1 does not resolve the problem, refer to the endpoint's service manual and verify administration on the endpoint. 3. If Step 2 does not resolve the problem, escalate to the next tier. For ASAI adjuncts: 1. Display the Customer Optional Features Form (administration screen) on the switch to determine which ASAI capabilities are turned on in the switch. 2. Verify that the adjunct is administered to support the identical capabilities as the switch. If there is a mismatch in the administered capabilities, then readminister the switch and/or the adjunct to establish a consistent set of desired capabilities on both the switch and the adjunct. 3. If Step 2 does not resolve the problem, escalate to the next tier. For AT&T adjuncts: 1. Display the Customer Optional Features Form (administration screen) on the switch to determine if the AT&T adjunct is set enabled on in the switch. 2. If error type 2567 or 2568, verify the AT&T adjunct version, and readminister if needed. 3. If step 2 does not fix the problem, escalate to the next tier of support

Continued on next page

Table 9-57. ISDN-BRI CAUSE VALUES — *Continued*

Error Code	Test Result	Description/ Recommendation
58	Bearer Capability Not Presently Available	Requested bearer capability is implemented, but not administered. No B-channel administered. See recommendation 50 above.
65	Bearer Service Not Implemented	Requested service not implemented in switch or endpoint.
69	Requested Facility Not Implemented	Requested service not supported in switch or endpoint. 1. Consult switch and endpoint documentation to determine service support. 2. If Step 1 does not resolve the problem, escalate to the next tier.
81	Invalid CRV	An invalid CRV was sent by the adjunct. 1. This may indicate a CRV inconsistency between the switch and the adjunct. See the CallVisor protocol reference manual. 2. If step 1 does not resolve the problem, escalate to the next tier.

p. For Error 2568 indicates that the adjunct id is invalid, check the vender id or software running on the AT&T adjunct

q. System Technician-Demanded Tests:
Descriptions and Error Codes

When inspecting errors in the system and deciding which ones to address, always investigate errors associated with the circuit pack and port first. Clearing these error codes first may also clear errors generated against the endpoint. When all circuit pack and port errors have been cleared, and errors still exist against the endpoint, always investigate errors in the order they are presented in

the table below. By clearing error codes associated with the *Signaling Link Status Test,* for example, you may also clear errors generated from other tests in the testing sequence.

Order of Investigation	Short Test Sequence	Long Test Sequence	D/ND*
Signaling Link Status Test (#626)	X	X	ND
BRI XID Test (#628)	X	X	ND
BRI Layer 3 Query (#629)	X(a)	X(a)	ND
BRI Remote Loop Back (#627)		X(a)	ND
BRI Set Audits (#630)	X(a)	X(a)	ND
BRI Vendor ID Test (#631)		X(a)	ND
BRI Model/Vintage ID Test (#632)		X(a)	ND

* D = Destructive; ND = Nondestructive

Note:

a. Will execute the **test port long PCSSpp** command, and review the results of the BRI Port Local LAN Loop Around Test to verify the repair.

Signaling Link Status Test (#626)

This test determines the current status of the signaling link. This test passes if the link is ‘‘bound’’ to an endpoint and fails if the link is ‘‘not bound.’’

The definition of the term ‘‘bound’’ for a link depends upon the type of endpoint and may depend on the successful completion of procedures at both Layers 2 and 3 of the protocol. The definition of ‘‘bound’’ for each type of endpoint is as follows:

- **BRI endpoints administered for MIM (management information messages) initialization (multipoint):**

  NOTE:
  An MIM is a level 3 message that conveys management and maintenance information between a communications system and a BRI terminal.

  For endpoints of this type, the signaling link is ‘‘bound’’ when the link is connected at Layer 2 and the link has been associated with an endpoint, [that is, the endpoint has completed SPID initialization (L3 established)].

- **ASAI adjuncts and BRI endpoints not administered for MIM initialization (point-to-point):**

  For endpoints of this type, the signaling link is ‘‘bound’’ when the link is connected at Layer 2 (L2 established).

For all endpoint types, a signaling link becomes ‘‘unbound’’ when it is disconnected at Layer 2. For BRI endpoints supporting MIM initialization, a signaling link may also become ‘‘unbound’’ if a subsequent attempt to perform SPID initialization on a ‘‘bound’’ link fails, (that is, wrong SPID is entered into the endpoint by the user)

Table 9-58. TEST #626 Signaling Link Status Test

Error Code	Test Result	Description/ Recommendation
1139	ABORT	The Packet Bus in the port network is out-of-service. 1. Follow the repair procedures for the Packet Bus. 2. After completing Step 1, execute the **test port long PCSSpp** command, and review the results of the BRI Port Local LAN Loop Around Test to verify the repair.
1141	ABORT	The PKT-CTRL is out-of-service. 1. Refer to PKT-CTRL (Packet Control Circuit Pack) Maintenance documentation. 2. If Step 1 does not resolve the problem, escalate to the next tier.
1144	ABORT	The PPN Packet Bus is out-of-service. 1. Follow the repair procedures for the Packet Bus in the PPN. 2. After completing Step 1, execute the **test port long PCSSpp** command, and review the results of the BRI Port Local LAN Loop Around Test to verify the repair.

Continued on next page

Table 9-58. TEST #626 Signaling Link Status Test — *Continued*

Error Code	Test Result	Description/ Recommendation
1187	ABORT	The circuit pack, port or station may have been busied out by a technician. 1. Look in the Error Log for Error Type 18 (busied out) for BRI-BD, BRI-PORT, or BRI-SET. a. If this error type is present for BRI-SET only, then release the station via the **release station** b. If this error type is present for BRI-PORT and BRI-SET, then release the port via the **release port PCSSpp** command and run the test again. c. If the error is present for BRI-BD, BRI-PORT, and BRI-SET, then release the circuit pack via the **release port PCSSpp** command and run the test again. If the error is present for BRI-SET only, then release the circuit pack via the **release port PPCSS** command and run the test again. If the error is present for both BRI-BD and BRI-PORT, then release the circuit pack via the **release board PPCSS** command and run the test again. **NOTE:** When you release the circuit pack, you release all ports associated with it. If certain ports still need to be busied out, use the **release port PCSSpp** command to busy them out. 2. Make sure the terminal is connected. 3. Retry the command at one-minute intervals a maximum of five times. 4. If the test continues to abort, escalate the problem.

Continued on next page

Table 9-58. TEST #626 Signaling Link Status Test — *Continued*

Error Code	Test Result	Description/ Recommendation
2012	ABORT	Internal System Error.
2100	ABORT	Could not allocate the necessary system resources to run this test. 1. Retry the command at one-minute intervals a maximum of five times. 2. If the test continues to abort, escalate the problem.
1113	FAIL	The signaling link is not ''bound'' to the adjunct or endpoint. For BRI endpoints supporting MIM initialization, this error indicates that the endpoint has not been bound to a signaling link (that is, SPID initialization has not been completed). Since the signaling link associated with the endpoint is not identified until SPID initialization completes, this error does not imply that the signaling link is connected or disconnected at Layer 2 nor does it provide the status of TEI assignment for the endpoint. For ASAI adjuncts and BRI endpoints not supporting MIM initialization, this error indicates that the link is disconnected at Layer 2. Since the signaling link associated with the endpoint has been identified via administration, the link is only ''unbound'' from the endpoint when it is disconnected. 1. Execute the **status bri-port PCSSpp** command and refer to the associated procedures for this command contained in the BRI-PORT (ISDN-BRI Port) Maintenance documentation. 2. If the test continues to fail, escalate the problem.
	PASS	The signaling link is connected at Layer 2 and ''bound'' to the BRI endpoint or ASAI adjunct.

BRI Remote Loop Back Test (#627)

This test checks the integrity of a circuit switched B-channel connection between the switch and the endpoint.

In this test, the endpoint is put in the ‘‘maintenance busy’’ state to prevent the switch from issuing calls to the endpoint during the test. An application message containing a loop back activate request for the appropriate B-channel is sent to the endpoint. The endpoint responds with a loop back activated response. Maintenance then sends data to the endpoint over the B-channel under test. Since the B-channel is looped back at the endpoint, maintenance should receive the data that it sent. If no data is detected, the test fails. An application message containing a loop back deactivate request is then sent to the endpoint to terminate the remote loop back test. The endpoint responds with an MIM message containing a loop back deactivate response. Maintenance then releases the endpoint so that it is available to terminate calls.

This test is not executed for ASAI adjuncts because adjuncts do not support MIMs upon which this test is based.

Table 9-59. TEST #627 BRI Remote Loop Back

Error Code	Test Result	Description/ Recommendation
1000	ABORT	Could not seize the endpoint or B-channels for test. 1. Retry the command at one-minute intervals a maximum of five times. 2. If the test continues to abort, escalate the problem.
1005	ABORT	The endpoint’s MIMs Supported field is administered to ‘‘no.’’ 1. Use the **change station extension** command to change parameter only if the endpoint documentation reflects support for ISDN-BRI Management and Maintenance Procedures.

Continued on next page

Table 9-59. TEST #627 BRI Remote Loop Back — *Continued*

Error Code	Test Result	Description/ Recommendation
1113	ABORT	The signaling link between the switch and the endpoint is down. 1. Use the **test port PCSSpp long** command to clear any errors which prevent establishment of the signaling link. 2. Examine the results of the Signaling Link Status Test (#626) which is run as part of this command. If this test aborts or fails, follow the repair procedure for Test #626. 3. If the XID Test continues to abort, escalate the problem.
1139	ABORT	The Packet Bus in the port network is out-of-service. 1. Follow the repair procedures for the Packet Bus. 2. After completing Step 1, execute the **test port long PCSSpp** command, and review the results of the BRI Port Local LAN Loop Around Test to verify the repair.
1141	ABORT	The PKT-CTRL is out-of-service. 1. Refer to PKT-CTRL (Packet Control Circuit Pack) Maintenance documentation. 2. If Step 1 does not resolve the problem, escalate to the next tier.
1144	ABORT	The PPN Packet Bus is out-of-service. 1. Follow the repair procedures for the Packet Bus in the PPN. 2. After completing Step 1, execute the **test port long PCSSpp** command, and review the results of the BRI Port Local LAN Loop Around Test to verify the repair.

Continued on next page

Table 9-59. TEST #627 BRI Remote Loop Back — *Continued*

Error Code	Test Result	Description/ Recommendation
1187	ABORT	The circuit pack, port or station may have been busied out by a technician. 1. Look in the Error Log for Error Type 18 (busied out) for BRI-BD, BRI-PORT, or BRI-SET. a. If this error type is present for BRI-SET only, then release the station via the **release station** b. If this error type is present for BRI-PORT and BRI-SET, then release the port via **release port PCSSpp** command and run the test again. c. If the error is present for BRI-BD, BRI-PORT, and BRI-SET, then release the circuit pack via the **release port PCSSpp** command and run the test again. If the error is present for both BRI-BD and BRI-PORT, then release the circuit pack via the **release board PPCSS** command and run the test again. If the error is present for BRI-SET only, then release the circuit pack via the **release port PPCSS** command and run the test again. **NOTE:** When you release the circuit pack, you release all ports associated with it. If certain ports still need to be busied out, use the **release port PCSSpp** command to busy them out. 2. Make sure the terminal is connected. 3. Retry the command at one-minute intervals a maximum of five times. 4. If the test continues to abort, escalate the problem.
2012	ABORT	Internal System Error. 1. Retry the command at one-minute intervals a maximum of five times. 2. If the test continues to abort, escalate the problem.

Continued on next page

Table 9-59. TEST #627 BRI Remote Loop Back — *Continued*

Error Code	Test Result	Description/ Recommendation
2068	ABORT	The endpoint has rejected the switch sent application message. This indicates that the endpoint does not support the ISDN-BRI Management and Maintenance Procedure for Loop Back Testing. 1. Use the **change station extension** command and change the MIMs Supported field to ‘‘no.’’
2069	ABORT	The endpoint has returned an error response to the application message sent by the switch.
2100	ABORT	Could not allocate the necessary system resources to run this test. 1. Retry the command at one-minute intervals a maximum of five times. 2. If the test continues to abort, escalate the problem.

BRI XID Test (#628)

This test checks the D-channel connection between the SPE and the endpoint or adjunct.

In this test, a D-channel XID frame is sent to the endpoint or adjunct over the point-to-point signaling link. The test passes if the endpoint or adjunct responds with a Layer 2 XID-RESPONSE frame

This test must be administered to not run in the station administration form for ports on a TN566.

Table 9-60. TEST #628 BRI XID

Error Code	Test Result	Description/ Recommendation
1000	ABORT	The BRI-SET, ASAI-ADJ, ATT-ADJ, LGATE-AJ, ATTE-AJ is busy. The test cannot be executed at this time: 1. Pause momentarily (30 seconds) and re-execute at this time. 2. If this problem persists, escalate this problem. **NOTE:** A BRI-PORT can also be busy. When using this for BRI-PORT/ABRI-PORT tests, the words ‘‘BRI-SET, ASAI-ADJ, ATT-ADJ,’’ can be changed to ‘‘BRI-PORT, ABRI-PORT, ATT-ADJ.’’
1005	ABORT	The endpoint is not administered to support XID Testing. 1. If the endpoint documentation reflects support XID testing, use the **change station extension** command to change the XID Testing? field on the form to ‘‘yes.’’

Continued on next page

Table 9-60. TEST #628 BRI XID — *Continued*

Error Code	Test Result	Description/ Recommendation
1113	ABORT	The signaling link between the switch and the endpoint is down. 1. Use the **test port PCSSpp l** command to clear any errors which prevent establishment of the signaling link. 2. Examine the results of the Signaling Link Status Test (#626) which is run as part of this command. If this test aborts or fails, follow the repair procedure for Test #626. 3. If the XID test continues to abort, escalate the problem.
1139	ABORT	The Packet Bus in the port network is out-of-service. 1. Follow the repair procedures for the Packet Bus. 2. After completing Step 1, execute the **test port long PCSSpp** command, and review the results of the BRI Port Local LAN Loop Around Test to verify the repair.
1141	ABORT	The PKT-CTRL is out-of-service. 1. Refer to PKT-CTRL (Packet Control Circuit Pack) Maintenance documentation. 2. If Step 1 does not resolve the problem, escalate to the next tier.
1144	ABORT	The PPN Packet Bus is out-of-service. 1. Follow the repair procedures for the Packet Bus in the PPN. 2. After completing Step 1, execute the **test port long PCSSpp** command, and review the results of the BRI Port Local LAN Loop Around Test to verify the repair.

Continued on next page

Table 9-60. TEST #628 BRI XID — *Continued*

Error Code	Test Result	Description/ Recommendation
1187	ABORT	The circuit pack, port or station may have been busied out by a technician. 1. Look in the Error Log for Error Type 18 (busied out) for BRI-BD, BRI-PORT, or BRI-SET. a. If this error type is present for BRI-SET only, then release the station via the **release station** b. If this error type is present for BRI-PORT and BRI-SET, then release the port via **release port PCSSpp** command and run the test again. c. If the error is present for BRI-BD, BRI-PORT, and BRI-SET, then release the circuit pack via the **release port PCSSpp** command and run the test again. If the error is present for BRI-SET only, then release the circuit pack via the **release port PCSSpp** command and run the test again. If the error is present for both BRI-BD and BRI-PORT, then release the circuit pack via the **release board PPCSS** command and run the test again. **NOTE:** When you release the circuit pack, you release all ports associated with it. If certain ports still need to be busied out, use the **release port PCSSpp** command to busy them out. 2. Make sure the terminal is connected. 3. Retry the command at one-minute intervals a maximum of five times. 4. If the test continues to abort, escalate the problem.
2012	ABORT	Internal System Error.
2100	ABORT	Could not allocate the necessary system resources to run this test. 1. Retry the command at one-minute intervals a maximum of five times. 2. If the test continues to abort, escalate the problem.

Continued on next page

Table 9-60. TEST #628 BRI XID — *Continued*

Error Code	Test Result	Description/ Recommendation
2000	FAIL	The XID-RESPONSE message was not received from the endpoint. 1. Consult the endpoint documentation to determine if the Layer 2 XID and XID-RESPONSE messages are supported. If the documentation reflects no support for these messages, change XID Testing? field to ‘‘no’’ using the **change station extension** command. 2. If the endpoint supports these Layer 2 messages and the test continues to fail, assume the endpoint is defective and replace it. 3. If the test continues to fail, escalate the problem.
	PASS	The switch can successfully pass messages over the D-channel to the BRI endpoint.

BRI Layer 3 Query Test (#629)

This test is used to check the application layer communications between the switch and the endpoint or adjunct.

For BRI endpoints, an application message containing the appropriate endpoint service state is sent by the switch to the endpoint. The endpoint responds with an acknowledgment to the application message.

For ASAI and AT&T adjuncts, this test is not executed from the administration terminal. Rather, a query message is automatically sent by the switch every two minutes. Failure of the switch to receive a response to a query from the adjunct is logged in the Hardware Error Log

Table 9-61. TEST #629 BRI Layer 3 Query

Error Code	Test Result	Description/ Recommendation
1005	ABORT	The endpoint's MIMs Supported? field is administered to "no." 1. Use the **change station extension** command to change the parameter only if the endpoint documentation reflects support for ISDN-BRI Management and Maintenance Procedures.
1113	ABORT	The signaling link between the switch and the endpoint or adjunct is down. 1. Use the **test port PCSSpp long** command to clear any errors which prevent establishment of the signaling link. 2. Examine the results of Test #626, which is executed with the command. If this test aborts or fails, follow the repair procedure for the Signaling Link Status Test. 3. Escalate problem if BRI Layer 3 Query Test continues to abort.
1139	ABORT	The Packet Bus in the port network is out-of-service. 1. Follow the repair procedures for the Packet Bus. 2. After completing Step 1, execute the **test port long PCSSpp** command, and review the results of the BRI Port Local LAN Loop Around Test to verify the repair.

Continued on next page

Table 9-61. TEST #629 BRI Layer 3 Query — *Continued*

Error Code	Test Result	Description/ Recommendation
1141	ABORT	The PKT-CTRL is out-of-service. 1. Consult the repair procedure for PKT-CTRL (Packet Control Circuit Pack) Maintenance documentation. 2. If Step 1 does not resolve the problem, escalate to the next tier.
1144	ABORT	The PPN Packet Bus is out-of-service. 1. Follow the repair procedures for the Packet Bus in the PPN. 2. After completing Step 1, execute the **test port long PCSSpp** command, and review the results of the BRI Port Local LAN Loop Around Test to verify the repair.

Continued on next page

Table 9-61. TEST #629 BRI Layer 3 Query — *Continued*

Error Code	Test Result	Description/ Recommendation
1187	ABORT	The circuit pack, port or station may have been busied out by a technician. 1. Look in the Error Log for Error Type 18 (busied out) for BRI-BD, BRI-PORT, or BRI-SET. a. If this error type is present for BRI-SET only, then release the station via the **release station** b. If this error type is present for BRI-PORT and BRI-SET, then release the port via the **release port PCSSpp** command and run the test again. c. If the error is present for BRI-BD, BRI-PORT, and BRI-SET, then release the circuit pack via the **release port PCSSpp** command and run the test again. If the error is present for BRI-SET only, then release the circuit pack via the **release port PPCSS** command and run the test again. If the error is present for both BRI-BD and BRI-PORT, then release the circuit pack via the **release board PPCSS** command and run the test again. **NOTE:** When you release the circuit pack, you release all ports associated with it. If certain ports still need to be busied out, use the **release port PCSSpp** command to busy them out. 2. Make sure the terminal is connected. 3. Retry the command at one-minute intervals a maximum of five times. 4. If the test continues to abort, escalate the problem.
2012	ABORT	Internal System Error.
2100	ABORT	Could not allocate the necessary system resources to run this test. 1. Retry the command at one-minute intervals a maximum of five times. 2. If the test continues to abort, escalate the problem.

Continued on next page

Table 9-61. TEST #629 BRI Layer 3 Query — *Continued*

Error Code	Test Result	Description/ Recommendation
2068	ABORT	The endpoint has rejected the switch sent application message. This indicates that the endpoint does not support the ISDN-BRI Management and Maintenance Procedure for Endpoint Service Messages. 1. Use the **change station extension** command and change the MIMs Supported? field to ‘‘no.’’
2069	ABORT	The endpoint has returned an error response to the switch sent application message. 1. Retry the command at one-minute intervals a maximum of five times. 2. If the test continues to abort, escalate the problem.
2000	FAIL	No response is received from the endpoint or the adjunct. For BRI endpoints: 1. Consult the endpoint documentation to determine if ISDN-BRI Management and Maintenance Procedures are supported. If not supported, use the **change station extension** command to change the ‘‘MIMs Supported?’’ field to ‘‘no.’’ Use the **busyout station extension** and **release station extension** commands to busyout and release the endpoint to resolve any endpoint alarms resulting from failure of this test. 2. If the endpoint supports these procedures and the test continues to fail, assume the endpoint is defective and replace it.
	PASS	The endpoint has successfully responded to the switch’s application message.

BRI Set Audits Test (#630)

This is a series of two tests which are classified as audits. The switch sends messages to the BRI endpoint to perform the following tests:

- Ringer Audit - This audit insures that both the switch and the endpoint agree as to the current state of the endpoint's ringer.
- Lamps Audit - This audit insures that both the switch and the endpoint agree as to the current state of the endpoint's lamps.
- Call Activity Audit - This audit insures that the state of calls is consistent between the switch and the endpoint.

This test is not executed for ASAI or AT&T adjunct because adjuncts do not employ ringers or lamps, or establish calls on the B-channels associated with the BRI interface

Table 9-62. TEST #630 BRI Set Audits

Error Code	Test Result	Description/ Recommendation
1113	ABORT	The signaling link between the switch and the endpoint is down. 1. Use the **test port PCSSpp long** command to clear any errors which prevent establishment of the signaling link. 2. Examine the results of the Signaling Link Status Test (#626) which is run as part of this command. If this test aborts or fails, follow the repair procedure for Test #626. 3. If the BRI Set Audits test continues to abort, escalate the problem.
1139	ABORT	The Packet Bus in the port network is out-of-service. 1. Follow the repair procedures for the Packet Bus. 2. After completing Step 1, execute the **test port long PCSSpp** command, and review the results of the BRI Port Local LAN Loop Around Test to verify the repair.

Continued on next page

Table 9-62. TEST #630 BRI Set Audits — *Continued*

Error Code	Test Result	Description/ Recommendation
1141	ABORT	The PKT-CTRL is out-of-service. 1. Refer to PKT-CTRL (Packet Control Circuit Pack) Maintenance documentation. 2. If Step 1 does not resolve the problem, escalate to the next tier.
1144	ABORT	The PPN Packet Bus is out-of-service. 1. Follow the repair procedures for the Packet Bus in the PPN. 2. After completing Step 1, execute the **test port long PCSSpp** command, and review the results of the BRI Port Local LAN Loop Around Test to verify the repair.

Continued on next page

Table 9-62. TEST #630 BRI Set Audits — *Continued*

Error Code	Test Result	Description/ Recommendation
1187	ABORT	The circuit pack, port or station may have been busied out by a technician. 1. Look in the Error Log for Error Type 18 (busied out) for BRI-BD, BRI-PORT, or BRI-SET. a. If this error type is present for BRI-SET only, then release the station via the **release station** b. If this error type is present for BRI-PORT and BRI-SET, then release the port via the **release port PCSSpp** command and run the test again. c. If the error is present for BRI-BD, BRI-PORT, and BRI-SET, then release the circuit pack via the **release port PCSSpp** command and run the test again. If the error is present for both BRI-BD and BRI-PORT, then release the circuit pack via the **release board PPCSS** command and run the test again. **NOTE:** When you release the circuit pack, you release all ports associated with it. If certain ports still need to be busied out, use the **release port PCSSpp** command to busy them out. 2. Make sure the terminal is connected. 3. Retry the command at one-minute intervals a maximum of five times. 4. If the test continues to abort, escalate the problem.
2012	ABORT	Internal System Error.
2100	ABORT	Could not allocate the necessary system resources to run this test. 1. Retry the command at one-minute intervals a maximum of five times. 2. If the test continues to abort, escalate the problem.
	PASS	The switch has successfully executed the BRI station audits.

SPID Facility Test

This test is used to verify the wiring and operation of the signaling link between the switch and a endpoint or adjunct on a BRI interface. **This test is not executed from the administration terminal, but rather is executed by using a BRI test set equipped with a display.** The test set may replace the BRI set, ASAI or AT&T adjunct under test by plugging it into the same jack or by bridging it onto the wiring at some point between the switch and the endpoint (or adjunct), thereby creating a pseudo-BRI multipoint configuration.

When plugged into the port in this manner, the test set establishes a signaling link connection with the switch and attempts to complete SPID initialization by using the Service SPID administered for the system (see the System Maintenance Administration Form). If the test set displays the correct administered port address for the endpoint or adjunct under test, the test passes (see Service SPID Display, which follows). If after one-minute nothing is displayed on the test set, the test fails.

SPID Facility Test

Test Result	Description / Recommendation
FAIL	No response is received from the endpoint. 1. Check the physical wiring between the switch and the endpoint or adjunct. 2. If test continues to fail, escalate to the next tier.
FAIL	Display does not match administered port address for the endpoint or adjunct. 1. Change station administration for endpoint or adjunct to match displayed port address. 2. If test continues to fail, escalate the problem.
PASS	Display matches administered port address for the endpoint or adjunct. For BRI endpoints: 1. Verify that the SPID values administered in the switch and the endpoint are consistent. 2. If the SPID values are correct, replace the endpoint. 3. If test continues to fail, escalate the problem. For ASAI adjuncts: 1. Verify that the TEI values administered in the switch and the adjunct are consistent. 2. If the TEI values are correct, consult the recommended repair procedures of the manufacturer for the adjunct. 3. If test continues to fail, escalate the problem.

The abbreviations used in (Service SPID Display) have the following meanings:

P	port network (1,2, ...)
C	Carrier (A,B,C, ...)
SS	Slot (01, 02, ...)
pp	port (01-12)
ext	extension one and two (one through 99999)
SPID	service order profile identifier

Table 9-63. Service SPID Display

Restricted Service starting display column		8		14		25		31
PCSSpp	-	ext1	-	SPID111111	-	ext2	-	SPID222222
starting display column		8		14		25		31
PCSSpp	*	ext1	*	SPID111111	-	ext2	-	SPID222222
Bound to Second Endpoint Translation starting display column		8		14		25		31
PCSSpp	-	ext1	-	SPID111111	*	ext2	*	SPID222222

Maintenance Object Repair Procedures CABINET to CUST-ALM

C

CABINET (Cabinet Sensors)

MO Name As It Appears In Alarm Log	Alarm Level	Initial System Technician Command To Run (a)	Full Name of MO
CABINET	MAJOR	test environment *UU*	Cabinet Sensors
CABINET	MINOR	test environment *UU*	Cabinet Sensors

a. *UU* is the universal cabinet number (1 for PPN, 2 to 22 for EPNs).

NOTE:
The CABINET maintenance object is valid only for multicarrier cabinets. For information about environmental maintenance on single carrier cabinets, refer to DC-POWER.

The Cabinet Sensors maintenance object monitors cabinet temperature and fan rotation. Two different types of fan assemblies are found in G3 systems variable-speed and nonvariable-speed. This maintenance object applies to both types, but differences between the two must be noted when diagnosing alarms or repairing components.

The SYSAM circuit pack in the PPN cabinet and the EPN Maintenance circuit pack in a multicarrier EPN cabinet monitor a temperature sensor (S1) at the top of the cabinet and generate a major alarm if the exit air temperature exceeds 650C (1490F). Another temperature sensor in the top of the cabinet (S2) also monitors exit air temperature. If it exceeds 700C (1580F), the Power Distribution Unit turns off all cabinet power and invokes Emergency Transfer. Other sensors monitor fan

performance. These are described in the following sections on the different assemblies.

Each multicarrier cabinet is equipped with six fans designed to keep the cabinet temperature below 650C (1490F). The three fans located in the front of the cabinet draw in air and channel it upwards through a filter, through carriers A, B, and C and out the top of the cabinet. The three fans in the back of the cabinet draw in air and channel it down through a filter, through carriers D and E and out the bottom of the cabinet. In AC-powered systems, the fans obtain -48 VDC power from the OLS631 DB power unit, and 5 VDC from the OLS631DA power unit, both of which are located in carrier A. In DC-powered systems, the fans obtain -48 VDC power from the 645B power unit, and 5 VDC from the 644A power unit, also located in carrier A. In all PPN cabinets and in EPN cabinets on Critical Reliability systems, the B carrier can also provide power to the fans. Power is supplied over the following path:

1. From the power unit to the current limiter card (CFY1B)
2. Over a wiring harness from the A carrier to the power filter (not present with old fan assemblies)
3. From the power filter (if present) to the connector on the back of the fan assembly
4. By fan unit cables to the 2-pin power connectors on the fans

The repair procedures that follow rely on your ability to distinguish between high and low fan speeds by the sound of the fans. Experience will allow you to distinguish between the high and low pitches generated by high and low speeds. A thermometer is also required for some of the procedures that follow.

You will find one of two different fan assemblies and associated control hardware on G3r systems. New systems are equipped with variable-speed fans. In older or upgraded cabinets, you may find nonvariable-speed fans. See Table 9-8 on page C-8 and descriptions to determine which fan assembly is present in the cabinet you are working on.

CAUTION:
Replacement procedures and error code interpretation vary for the two different fan assemblies. Be sure you are consulting the proper section for the type of fans you are working on.

In making replacements, observe the following rules:

- New fan assemblies accept *only* variable-speed fans.
- Old fan assemblies accept either variable-speed or nonvariable-speed fans.
- Replace a fan assembly (carrier) *only* with a fan assembly of the same type (new for new, old for old).

Variable-Speed Fans

A variable-speed fan is identified by the following features (see Table 9-8 on page C-8):

- A fan and air filter assembly with product code ED-67077-30, Group 4 or greater, labeled on the front of the carrier
- A five-pin white connector mounted next to each fan on the fan assembly cover plate for speed control and alarm circuitry
- A two-pin black -48 V power connector to each fan
- A power filter (ED-1E554-30, G1 or G2) located in a metal box mounted behind the fans on the right-hand cable trough as you face the rear of the cabinet
- The AHD1 circuit pack and the two S4 sensors used with older fan assemblies are *not* present.

Each variable-speed fan contains integrated thermal speed control and alarm circuits that are isolated from the power circuit. The fans in the front of the cabinet are connected to an S3 negative temperature coefficient thermistor which monitors the exhaust air temperature above carrier position "C." (The thermistor for variable speed fans is about 1/2 inch long, Comcode: 406-606-020). The fans in the back of the cabinet are connected to another S3 thermistor which monitors the exhaust air in the power distribution unit. The speed of the fans varies continuously in response to exhaust temperatures detected by the S3 sensors. Minimum speed is reached at 250C or lower, and maximum speed at 500C or higher.

Alarm leads from each fan are tied together into a single lead which registers a minor alarm against CABINET whenever a fan's speed drops below a preset limit or fails altogether.

NOTE:
The front fans may run at a different speed than the rear fans since they are controlled by different sensors.

Nonvariable-Speed Fans

Nonvariable-speed fan and air filter assemblies, found on some upgraded cabinets, are identified by the following (see also Figure 9-8 on page C-8):

- Product code ED-67077 G1, G2 or G3, labeled on the front of the fan
- An AHD1 fan-speed circuit pack mounted on the left inner side of the fan assembly as you face the front of the cabinet.
- Black two-pin power connectors on the fans, similar to the variable-speed fans

- Nonvariable-speed fan assemblies do not have the white five-pin connectors or the power filter found in variable-speed assemblies.

The AHD1 circuit pack monitors two S3 positive temperature coefficient thermistors and two S4 sensors located in the air intake of the fan assembly to determine fan performance and air flow. (The thermistor for nonvariable speed fans is about 1 inch long, Comcode: 406-450-046). Whenever there is a 150C (270F) or greater difference between intake and exhaust air, *and* the air exhaust temperature is greater than 500C (1220F), the following sequence takes place:

- Fans are turned up to high speed.
- The AHD1 circuit pack reports an air flow problem.
- A minor alarm is logged against CABINET.

Replacing Variable-Speed Fans

This procedure applies to replacement of a variable-speed fan (KS-23912, L3) in a new type fan assembly (ED-67707-30, G4 or greater). Do *not* use a nonvariable-speed fan in this assembly.

1. If replacing a fan in the front of the cabinet, remove the white plastic fan assembly cover by pulling it outward. There is no cover on the rear fans; they are accessible simply by opening the rear cabinet doors.
2. *Connect the grounding wrist strap to yourself and the cabinet.* The fan alarm circuit can be damaged by ESD.
3. *First* disconnect the white 5-pin connector on the fan assembly.
4. Loosen and remove the retaining screw nearest the power connector on the defective fan.
5. *Then* disconnect the 2-pin black power plug on the fan.
6. Loosen and remove the other retaining screw on the fan.
7. Remove the fan from the fan assembly.
8. Position the new fan and insert the screw that is opposite the power connector.
9. *First* connect the 2-pin black power plug on the fan.
10. *Then* connect the white 5-pin connector on the fan assembly. Insert and tighten the retaining screws.
11. Replace the front fan cover, if removed.

Replacing the Fan Power Filter

The fan power filter (ED-1E554-30) is a metal box located behind the fans on the right-hand cable trough as you face the rear of the cabinet. It is not present with nonvariable-speed fan assemblies.

CAUTION:

The fan power filter can be replaced without powering down the cabinet. To avoid damage, you must use the following steps in the proper order. Note that the J2F/P2F connectors on the power filter must not be connected whenever connecting or disconnecting the J2/P2 connectors on the fan assembly.

1. Access the power filter through the rear cabinet doors.
2. *Connect the grounding wrist strap to yourself and the cabinet.* The fan alarm circuit can be damaged by ESD.
3. First disconnect cabinet local cable connector J2F from the P2F connector on top of the power filter.

   NOTE:
   Failure to disconnect the J2F connector on the filter *before* the J2 connector on the fan assembly can damage the fan alarm circuits.

4. Then disconnect cable connector J2 from the P2 connector on the fan assembly.
5. Loosen the power filter mounting screws using a 5/16" nut driver and remove the filter.
6. Connect the J2 cable connector of the replacement power filter to the P2 connector on the fan assembly.

   NOTE:
   Failure to connect the J2 connector on the fan assembly *before* proceeding with the following steps can damage the fan alarm circuits.

7. Mount the new power filter on the screws and tighten.
8. Connect cabinet local cable connector J2F to the P2F connector on the top of the power filter.
9. The fans should start rotating after a 4 second delay.

Replacing Nonvariable-Speed Fans

This procedure applies only to replacing a fan in a nonvariable-speed fan assembly that may be found in upgraded or older cabinets. A variable-speed fan maybe used in such an assembly.

First Determine Which Fans Are Defective

1. If any fan is *not* rotating, a more detailed inspection is required to determine why the fan has stopped operating. The fact that a fan is not spinning is not always proof that it is damaged. Since each front fan is electrically in parallel with a rear fan, an internal short circuit in one can prevent power from reaching the other.

   Remove the front fan assembly cover by pulling the cover outward. Remove the power connector from each inoperative front fan.

2. Determine if the front fan or the rear fan has failed:

   a. Test the front fan:

      Measure the input impedance between the (+) and (-) input terminals of the front fan with an ohmmeter. *Important: Attach the ''common'' lead of the ohmmeter to the fan's (-) input terminal and the ''ohms'' or ''+'' lead of the ohmmeter to the fan's (+) input terminal.*

      Follow the guidelines in the table below:

Input Impedance	Fan Analysis	Action	Next Step
2.0M < ohms < 20M	Good	None	Go to Step 2B
ohms < 2.0M	Short Circuit	Replace	Go to Step 3
ohms > 20M	Open Circuit	Replace	Go to Step 3

   b. Test the paired rear fan:

      From the front of the cabinet, use a voltmeter to measure the DC voltage across the two female contact pins in the wire-harness connector removed from the inoperative front fan in Step 1.

      Follow the guidelines in the table below:

Voltage	Fan Analysis	Action
VDC > 25 V	Good	AHD1 or front Fan has failed.
VDC < 25 V	Short Circuit	Replace fan and go to Step 3.

   1. To replace a front fan, remove the fan assembly cover by pulling the cover outward. To replace a rear fan, use a No. 10 slot screwdriver or 5/16" (8mm) wrench and remove the panel covering the fan assembly.
   2. Loosen and remove the retaining screw nearest the power plug on the defective fan.

DANGER:
48 V power is present on the fan plug.

3. Disconnect the power plug from the defective fan.
4. Loosen and remove the other retaining screw on the fan.
5. Remove the fan from the fan assembly.
6. Position the replacement fan and reconnect the fan power plug. If a variable-speed fan is used, leave the white 5-pin connector unconnected.
7. Secure the 5-pin connector out of the way so that it will not interfere with the fan blades.
8. Insert and tighten the retaining screws.
9. Replace the fan assembly cover or panel.

Replacing the AHD1 Circuit Pack

This procedure applies only to nonvariable-speed fan assemblies that may be found in older or upgraded cabinets.

1. Remove power from the system.
2. Remove the front fan assembly cover by pulling the cover outward.
3. Loosen and remove the retaining screw nearest the power plug on the front fan located to the extreme left.
4. Disconnect the power plug from the fan.
5. Loosen and remove the other retaining screw on the fan.
6. Remove the fan from the fan assembly.

CAUTION:
Do not touch components on the circuit pack! Resistors on the circuit pack are hot.

7. Lift the latch on the AHD1 circuit pack.
8. Using the latch as a handle, pull the circuit pack up and out of its holder.
9. Insert a replacement AHD1 circuit pack, and push down on the latch until the latch snaps in place.
10. Position the fan, and reconnect the fan power plug.
11. Insert and tighten the retaining screws.
12. Replace the fan assembly cover.
13. Restore power to the switch.

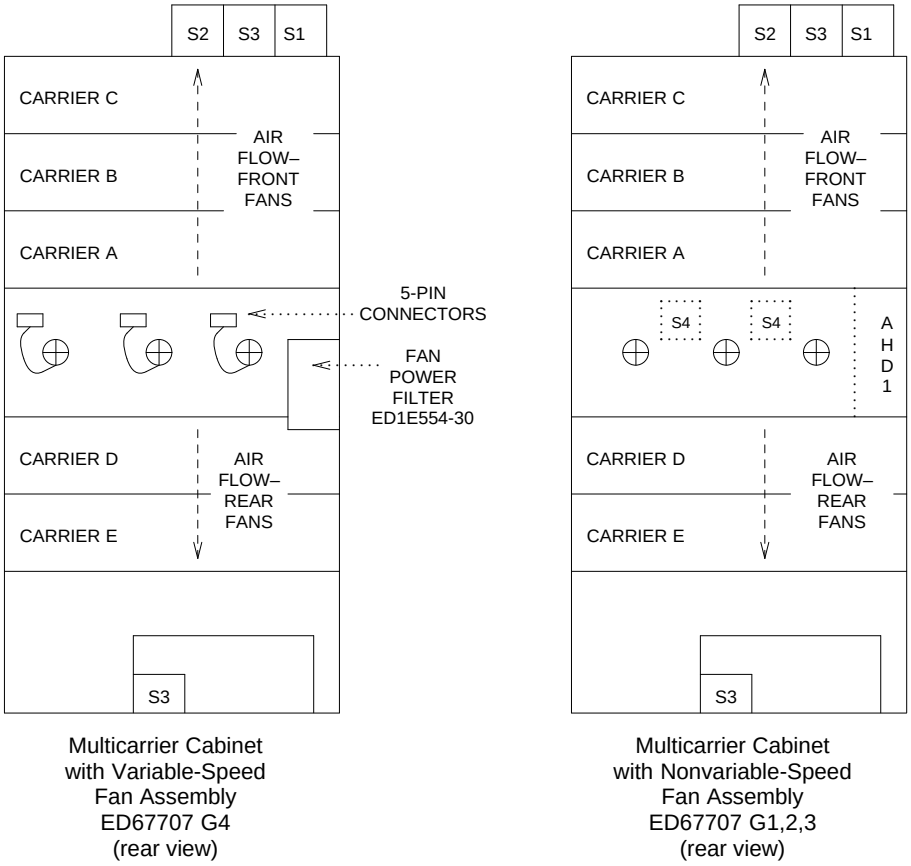

Multicarrier Cabinet with Variable-Speed Fan Assembly ED67707 G4 (rear view)

Multicarrier Cabinet with Nonvariable-Speed Fan Assembly ED67707 G1,2,3 (rear view)

Figure 9-8. CABINET Maintenance Object Components

Hardware Error Log Entries and Test to Clear Values

Cabinet Sensors Error Log Entries					
Error Type	**Aux Data**	**Associated Test**	**Alarm Level**	**On/Off Board**	**Test to Clear Value**
0*	0	Any	Any	Any	test environment *UU*
1	0 or 1	Cabinet Temperature Query (#122)	MINOR	ON	test environment *UU* s r 3
257	0 or 1	Cabinet Temperature Query (#122)	MAJOR	ON	test environment *UU* s r 3

System Technician-Demanded Tests: Descriptions and Error Codes

Always investigate tests in the order presented in the table below. By clearing error codes associated with one test, you may also clear errors generated from later tests in the sequence.

Order of Investigation	ShortTest Sequence	LongTest Sequence	D/ND*
Battery & Battery Charger Query Test (#5) (a)	X	X	ND
AC Power Query Test (#78) (b)	X	X	ND
OLS Query Test (carrier E) (#127) (c)	X	X	ND
OLS Query Test (carrier D) (#127) (c)	X	X	ND
OLS Query Test (carrier A) (#127) (c)	X	X	ND
OLS Query Test (carrier B) (#127) (c)	X	X	ND
OLS Query Test (carrier C) (#127) (c)	X	X	ND
Emergency Transfer Query Test (#124) (d)	X	X	ND
Cabinet Temperature Query Test (#122)	X	X	ND
External Alarm Lead Query Test (#120) (e)	X	X	ND
Analog Ring Generator Initial Test (#117)(f)	X	X	ND
Analog Ring Generator Query Test (#118) (f)	X	X	ND

a. See the POWER section in this chapter.

b. See the AC-POWER section in this chapter.

c. See the CARR-POW section in this chapter.

d. See the EMG-XFER section in this chapter.

e. See the EXT-DEV section in this chapter.

f. See the RING-GEN section in this chapter.

Cabinet Temperature Query Test (#122)

This test queries the SYSAM in a PPN or the EPN Maintenance circuit pack in an EPN for the status of the temperature and fan sensors in the cabinet. Note that a failure with error code 1 has different meanings for variable and nonvariable-speed fan assemblies.

Table 9-64. TEST #122 Cabinet Temperature Query Test

Error Code	Test Result	Description/ Recommendation
1000	ABORT	System resources required to run this test are not available. 1. Retry the command at 1 minute intervals a maximum of 5 times. 2. If the test continues to abort, escalate the problem.
2000	ABORT	Response to the test request was not received within the allowable time period. 1. Retry the command at 1 minute intervals a maximum of 5 times. 2. If the test continues to abort with error code 2000, check for power problems with the A carrier (PPN or EPN). Look for and resolve all AC-POWER and CARR-POW alarms in a multicarrier cabinet or DC-POWER alarms in a single carrier cabinet. Repeat the test. 3. If the test continues to abort with error code 2000, check for and resolve all SYSAM errors in a PPN or MAINT errors in an EPN. Repeat the test. 4. If the test continues to ABORT with error code 2000, escalate the problem.
2029 2319 2500	ABORT	Internal System Error 1. Retry the command at 1 minute intervals a maximum of 5 times. 2. If the test continues to abort, escalate the problem.

Continued on next page

Table 9-64. TEST #122 Cabinet Temperature Query Test — *Continued*

Error Code	Test Result	Description/ Recommendation
1	FAIL	**VARIABLE-SPEED FAN ASSEMBLIES:** One or more fans have stopped. *If none of the fans are running:* 1. Look for and resolve all alarms against CARR-POW for this cabinet. 2. Verify that 48 VDC is available to the fan power filter at the J2F local cable connector. The tolerable range for this measurement is -42.5 V to -52.5 V. There should be 48 VDC between the following pin pairs: 2/3, 8/9, 10/11. If -48 VDC is not present, replace the CFY1B current limiter card. If the fans still do not run, follow normal escalation procedures. 3. If there is 48 VDC at the power filter input, verify that there is 48 VDC at the power filter output **using the following procedure exactly to avoid damage to the fan alarm circuit**. Note that the J2F/P2F connectors on the power filter must be disconnected whenever connecting or disconnecting the J2/P2 connectors on the fan assembly. *First* disconnect connector J2F from P2F on the top of the filter. *Then* disconnect J2 from P2 on the fan assembly. Reconnect J2F to P2F on the filter. There should be 48 VDC between the following pin pairs on the J2 connector: 2/3, 8/9, 10/11. If not, replace the fan power filter using the procedure described previously. *Be sure to disconnect the J2F/P2F connector again before reconnecting the J2/P2.* If 48 VDC is present, the fans should have power. Make sure all power connectors are sound and making good contact. *Be sure to disconnect the J2F/P2F connector again before reconnecting the J2/P2.*

Continued on next page

Table 9-64. TEST #122 Cabinet Temperature Query Test — *Continued*

Error Code	Test Result	Description/ Recommendation
1	FAIL	*(Continued)* *If some of the fans are running and some are not:* 1. Replace the defective fans. If all fans can then be started, wait 5 minutes and rerun the test. If the test fails again, proceed to the next step below. *If all fans are running and the test fails with error code 1:* One or more fans may have a defective alarm circuit. *If all fans are running and the test fails with error code 1:* One or more fans may have a defective alarm circuit. 2. Remove all 6 white 5-pin connectors on the front and back of the fan assembly. This will cause all fans to run at high speed and the alarm to be cleared. If the alarm does not clear, the SYSAM (in a PPN) or EPN Maintenance circuit pack is incorrectly reporting the problem. Check for and resolve all errors against SYSAM or MAINT, and then rerun the test. 3. One at a time, replace the 5-pin connectors and check to see if the alarm recurs. Replace each fan whose reconnection causes a recurrence of the alarm.

Continued on next page

Table 9-64. TEST #122 Cabinet Temperature Query Test — *Continued*

Error Code	Test Result	Description/ Recommendation
1	FAIL	**NONVARIABLE-SPEED FAN ASSEMBLIES** (found on older or upgraded cabinets): The AHD1 circuit pack has reported an air flow problem. The temperature difference between the air intake and the air exhaust is at least 15 0C (27 0F) *and* the absolute temperature at the top of the cabinet is at least 50 0C (122 0F). The fans should be running at high speed. *If none of the fans are running*, then: 1. Look for and resolve all alarms against CARR-POW. 2. Verify that 48 VDC is available to the fan wiring harness connector between pin pairs 2/3, 8/9, 10/11. The tolerable range for this measurement is -42.5 V to -52.5 V. If 48 VDC is present and the fans are not running, replace the AHD1 circuit pack. If the fans still do not run, escalate the problem. If 48 VDC is not present, replace the CFY1B current limiter card. If the fans still do not run, escalate the problem. *If some fans are running and some not*, replace the defective fans, using the previously described procedure for nonvariable-speed fans. If all fans can then be started, wait five minutes and rerun the test. If the test fails again, proceed to the next step. *If all fans are running, but not at high speed*, measure the cabinet temperature at the air intake and the air exhaust at the top of the cabinet. a. If the 15 0C/50 0C criteria is met, there is a problem with either the AHD1 circuit pack or the fans. Replace the AHD1 circuit pack and/or the fans. If this succeeds in getting the fans to run at high speed, wait five minutes to give the cabinet time to cool down and rerun the test. If the problem persists, escalate the problem. b. If the 15 0C/50 0C criteria is not met, the SYSAM (in a PPN) or EPN Maintenance (in an EPN) circuit pack is incorrectly reporting this condition. Look for and resolve all errors on SYSAM or MAINT, and rerun the test. If the test still fails, escalate the problem.

Continued on next page

Table 9-64. TEST #122 Cabinet Temperature Query Test — *Continued*

Error Code	Test Result	Description/ Recommendation
1	FAIL	**NONVARIABLE-SPEED FAN ASSEMBLIES (Continued):** *If the fans are running at high speed*, check the following items, any of which could be restricting or redirecting air flow within the cabinet. 1. Check both filters. If a filter is dirty or clogged replace it or clean it with soap and water or a vacuum. 2. Make sure there is nothing other than circuit packs in the carrier slots that could be restricting the air flow. 3. Make sure there are no missing circuit pack faceplates or blanks. 4. The cabinet door must be closed for the fans to be able to properly cool the cabinet. 5. Wait five minutes to give the fans a chance to cool the cabinet. Rerun the test. If the tests still fails, proceed to the next step. *After checking the above conditions*, there should be nothing impeding the air flow, and the fans should be running at high speed. Check temperatures for the 15 0C/50 0C criteria. *If the 15 0C/50 0C criteria is present*, a temperature problem does exist and the fans at high speed should cool down the switch. Wait five minutes and rerun the test. If the test still fails, the ambient room temperature is probably too high, and the room should be cooled. *If the 15 0C/50 0C criteria does not exist*, one of the following is defective: — AHD1 circuit pack — fans — S3 sensors — S4 sensors Replace these items one at a time in the order listed, running the test after each replacement. If many environment tests are failing, suspect a problem undetected by maintenance on the SYSAM or EPN Maintenance circuit pack, depending on the cabinet type. Replace that circuit pack. If the problem persists, follow normal escalation procedures.

Continued on next page

Table 9-64. TEST #122 Cabinet Temperature Query Test — *Continued*

Error Code	Test Result	Description/ Recommendation
2	FAIL	The SYSAM or the EPN Maintenance circuit pack has reported a temperature problem due to the S1 sensor detecting a temperature of at least 650C (1490F). *The entire cabinet is in danger of being powered down if the temperature reaches 700C (1580F). If any of the fans are not running*, there should be a FAIL with error code 1 present. Follow procedures for that error code, noting the differences for variable and nonvariable-speed fan assemblies. *If the fans are running*, check the temperature at the top of the cabinet. *If the temperature is at least 650C (1490F)*, the ambient room temperature is too high and the fans cannot cool the system. Unless the room temperature is reduced, the system will shut down soon. *If the temperature at the top of the cabinet is less than 650C*, either the S1 sensor or the SYSAM or EPN Maintenance circuit pack is incorrectly reporting the problem. a. Look for and resolve any errors against SYSAM or MAINT and then rerun this test. If there are no such errors continue with the next step. b. Replace S1 sensor and rerun the test. If the test still fails, escalate the problem.
3	FAIL	Fan failures *and* temperature alarms have been reported. First resolve the fan failure (error code 1). This should also resolve the temperature alarm. (With nonvariable-speed fan assemblies, fan failures correspond to air flow problems).
	PASS	Temperature measurements and fan performance are satisfactory. If a problem has been reported, investigate under the appropriate FAIL case.

CARR-POW (Carrier Power Supply)

MO Name As It Appears In Alarm Log	Alarm Level	Initial System Technician Command To Run (a)	Full Name of MO
CARR-POW	MAJOR	recycle carrier *UUC*	Carrier Port Power Supply

a. *UU* is the universal cabinet number (1 for PPN, 2 -22 for EPNs), *C* is the carrier designation (A, B, C, D, or E). Recycle the carrier indicated by the PORT field in the alarm log.

CAUTION:
Recycling a carrier disrupts service dependent on circuit packs in the carrier.

DEFINITY Generic 3r systems support two different cabinet types: multicarrier and single carrier. Single carrier cabinets are used only for EPNs. Both cabinet types may be powered by either AC or DC external power source. Environmental maintenance differs according to cabinet type and external power supply. Refer to the following table to determine which maintenance object documentation to use for environmental maintenance.

Cabinet Type	Power Source	Environmental Maintenance Objects
Single carrier (EPN)	AC or DC	DC-POWER (all environmental maintenance)
Multicarrier	AC	AC-POWER for AC-powered systems (external power source) POWER for AC-powered systems (battery backup) CARR-POW (carrier port power supply) CABINET (temperature and fan sensors)
Multicarrier	DC	CARR-POW (carrier port power supply) CABINET (temperature and fan sensors)

The CARR-POW (Carrier Port Power Supply) maintenance object represents the pair of power supplies that supply +5V, -48V and -5 VDC power to each carrier in a multicarrier cabinet. In AC-powered cabinets, these are called Off Line Switches (OLS); in DC-powered cabinets, they are DC/DC converters.

Recycling Power Supplies

When a port carrier power supply problem is reported by hardware, the system can recycle the pair of power supplies in that carrier. When a carrier is recycled, both of its power supplies are turned off for two seconds and then turned back on. The system cannot recycle the power supplies on any of the following types carriers even if they are duplicated:

— PPN control carrier

— Expansion control carrier

— Switch node carrier

— Single-carrier cabinet

WARNING:
When a port carrier is recycled, all service dependent upon circuit packs in that carrier is disrupted.

Carrier Port Power Supplies—Multicarrier Cabinets

Code	System Power	Output (VDC)	Location
631DA	AC	+5	Left side
631DB	AC	-48/-5	Right side
644A	DC	+5	Left side
645B	DC	-48/-5	Right Side
TN755B		165	Slots 17 and 18
Also			
Supported:			
631WA/AR	AC	+5	Left side
631WB/BR	AC	-48	Right side
TN736	AC	-5	Used with 631
TN752	AC	165/-5	WA/WB or AR/AB

AC-Powered Cabinets

In AC powered cabinets, the Power Distribution Unit, or PDU (58890CE-1), distributes 120/208V AC from a wall outlet through a set of fuses (F1-F7) to the Off-Line Switchers (OLSs). (During emergency backup in a system so equipped, 144 VDC is supplied.) Each carrier in the cabinet is equipped with two OLSs; the 631OLS DA and the 631OLS DB, which together supply the required voltages to the carrier.

Loss of the 631OLS DB Carrier Port Power Supply in the active PPN control carrier drops the G3-MT login. In a system with duplicated SPEs, the active SPE should interchange to the standby SPE upon detection of a CARR-POW alarm. Figure 9-9 through Figure 9-12 below show the location and related power supplies of each fuse.

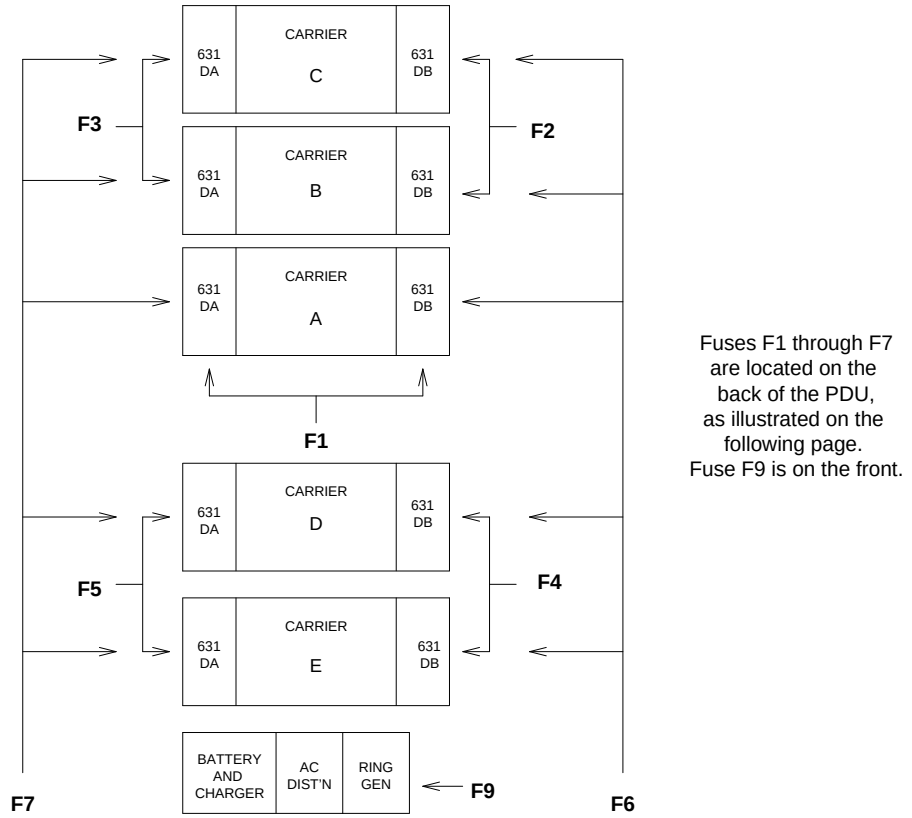

Figure 9-9. Fuse Assignments for AC-Powered Systems (PDU 58890CE-1)

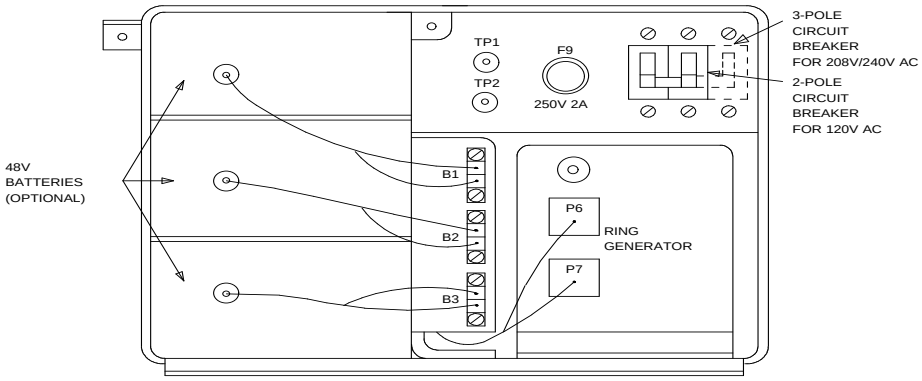

Figure 9-10. AC Power Distribution Unit J58890CE-1

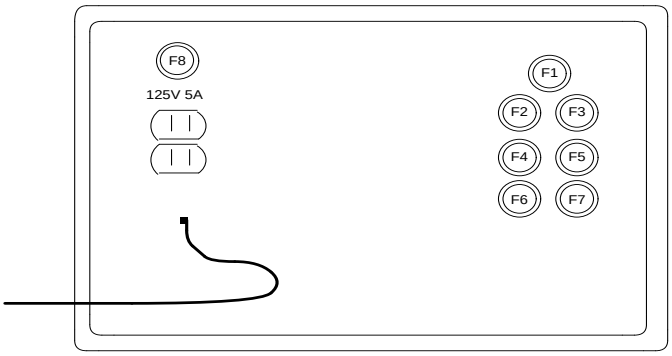

Figure 9-11. AC Power Distribution Unit J58890CE-1

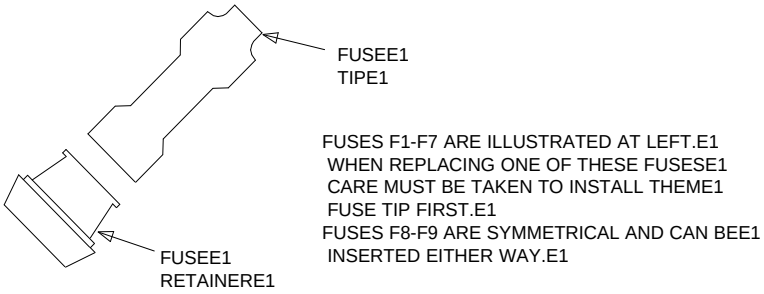

Figure 9-12. AC Power Distribution Unit J58890CE-1

DC-Powered Cabinets

In a DC-powered cabinet, the Power Distribution Unit (J58890CF-1, list 2 or list 3), distributes -48VDC voltage from an external device via circuit breakers to the carrier power supply units. The J58890CF-1, list 3 has six circuit breakers. The J58890CF-1, list 2 has 12 circuit breakers. (The list 2 PDU is an older unit that may be found in cabinets that have been upgraded to G3r.) Each carrier in the system is equipped with two power supplies, the 644A and the 645B, which together supply the required voltages to the carrier.

Loss of the 645B Carrier Port Power Supply in the active PPN control carrier will cause the G3-MT login to drop. In a system with duplicated SPEs, an SPE interchange should take place if a CARR-POW alarm is logged against the active control carrier. The following tables show which carriers are protected by each circuit breaker.

Circuit Breakers for DC-Powered Systems (PDU J58890CF-1, list 3

Circuit Breaker	Associated Carriers
CB1	Carrier A, both sides
CB2	Carriers B and C, right side
CB3	Carriers B and C, left side
CB4	Carriers D and E, right side
CB5	Carriers D and E, left side
CB6	Filter

Circuit Breakers for DC-Powered Systems (PDU J58890CF-1, list 2)

Circuit Breaker	Associated Carrier
CB1	Carrier A right side
CB2	Carrier B right side
CB3	Carrier C right side
CB4	Carrier D right side
CB5	Carrier E right side
CB6	Filter A
CB7	Filter B
CB8	Carrier A left side
CB9	Carrier B left side
CB10	Carrier C left side
CB11	Carrier D left side
CB12	Carrier E left side

On both units, the Ring Voltage Generator is protected by a fuse located next to the main circuit breaker on the front of the PDU.

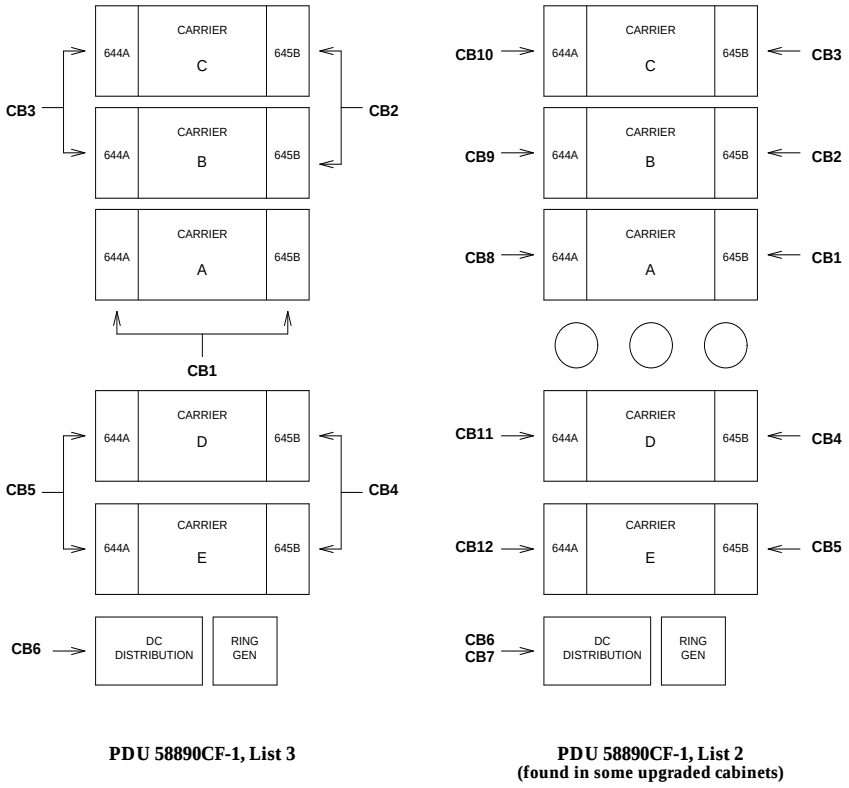

Figure 9-13. Circuit Breaker Assignments for DC-Powered Systems

The ringing voltage generator is protected by a fuse located next to the MAIN circuit breaker.

These two Power Distribution Units are illustrated on the following pages.

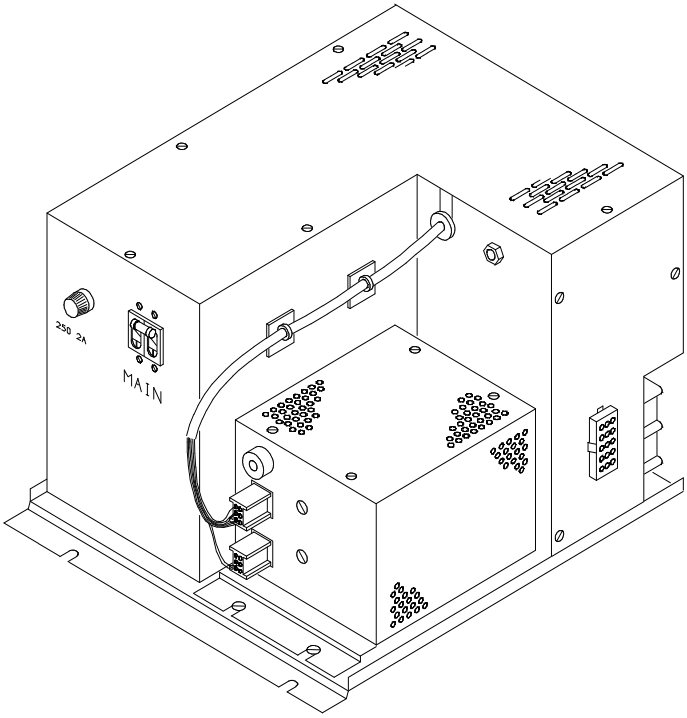

Figure 9-14. Multi-Carrier Cabinet DC Power Distribution Unit, Front View

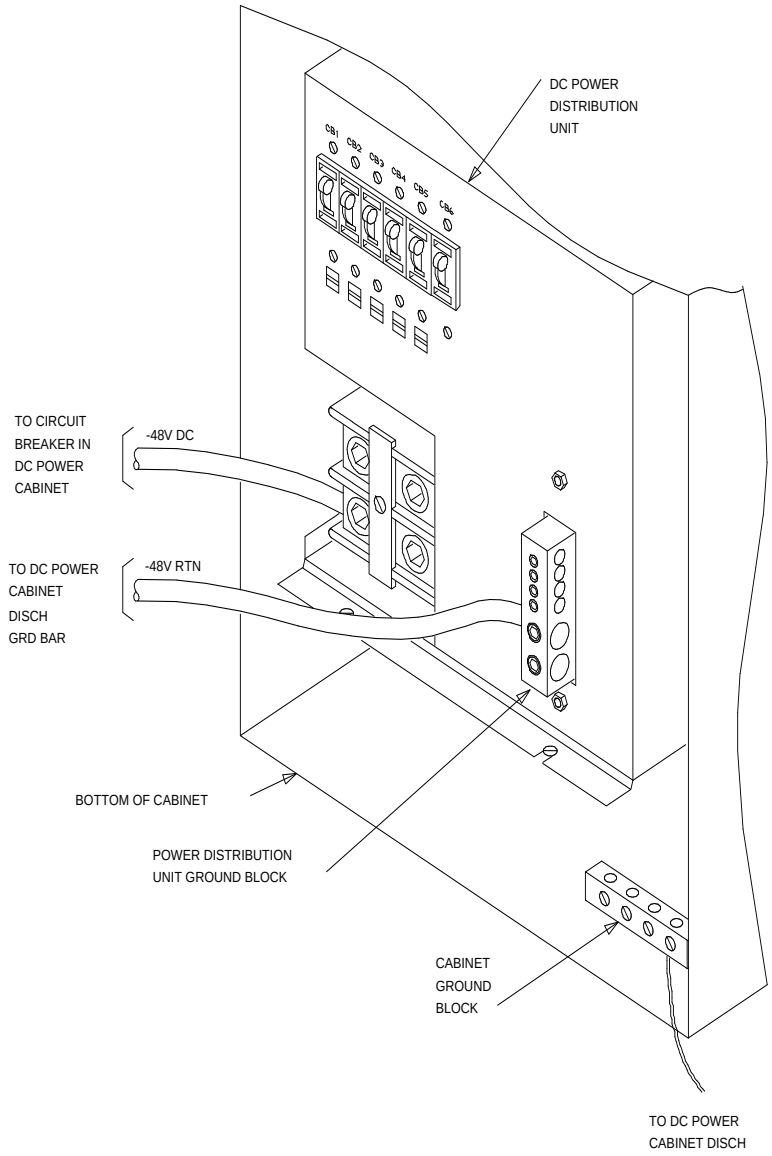

Figure 9-15. DC Power Distribution Unit 58890CF-1, list 3 (from rear of cabinet)

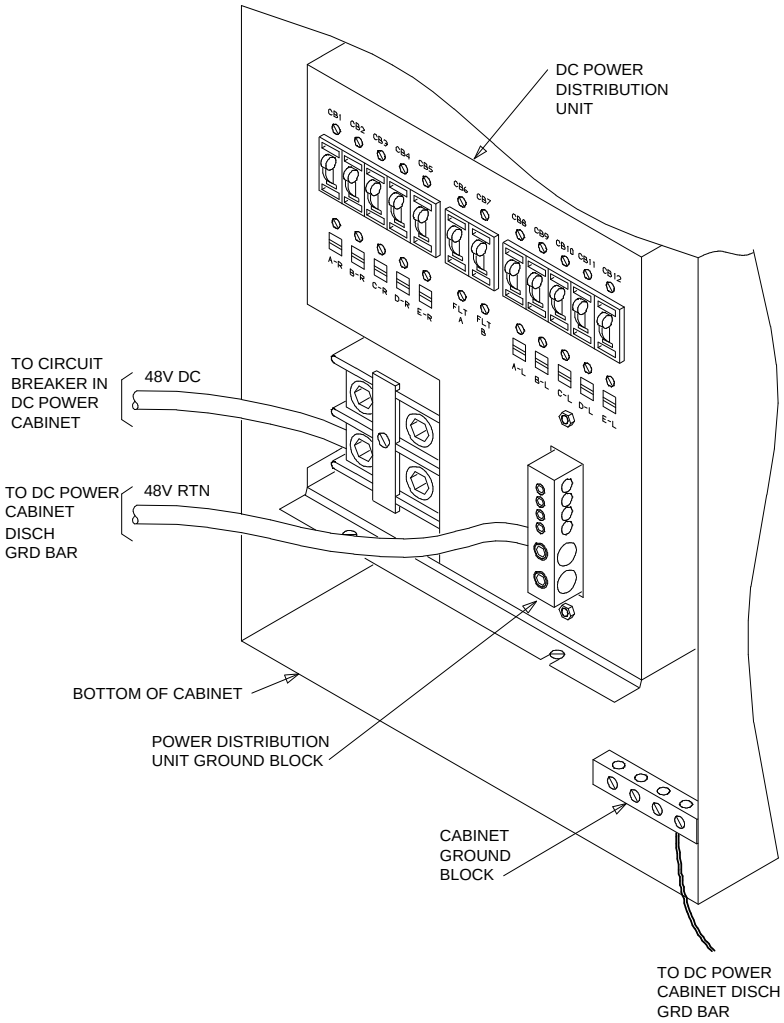

Figure 9-16. Power Distribution Unit 58890CF-1, list 2 for DC-Powered Cabinets (Found in some upgraded cabinets)

Neon Lamp Power

The system can also support neon message waiting lamps on analog telephones. Any carrier containing a TN769 Neon Analog Line circuit packs must also be supplied with 165 V from a TN755B power supply circuit pack. See the table above for other supported neon power circuit packs.

Replacing Carrier Port Power Supplies

WARNING:

Replacing an OLS will disrupt all service dependent on circuit packs in that carrier. If the carrier is a simplex control carrier, a total system outage will occur. If the carrier is a control carrier on a system with duplicated SPE, Follow the lock-and-power-down procedure described in Replacing SPE Circuit Packs in Chapter 5, "Responding to Alarms and Errors". If the carrier is an expansion control carrier, service to the EPN will be disrupted.

1. For OLS 645B, 631AR, and 631BR only, set the power switch to OFF.
2. Unplug the power cord.
3. Move the locking slide on the power unit to its leftmost position, and unlatch the locking lever.
4. Remove the power unit from the carrier.
5. For OLS 631AR and 631BR only:

   Before installing the replacement power unit in the carrier, turn the power unit on its side and operate rocker switches 1 through 4 on the dip switch as follows:

Switch	631AR Position	631BR Position
1	open	open
2	closed	closed
3	open	open
4	closed	open

In the open position, the side of the rocker opposite the number is down. In the closed position, the side of the rocker adjacent to the number is down.

1. Move the locking slide on the replacement power unit to the extreme left position and open the locking lever.
2. Insert the power unit into the carrier until some resistance is felt.
3. Lift the locking lever upward until it latches.
4. Move the locking lever slide on the power unit to the extreme right position.
5. Plug in the power cord.
6. For OLS 645B, 631AR, and 631BR only, set the power switch to ON.

Replacing TN736 Power Supply Circuit Packs

Replacing the circuit pack will interrupt the -5 volt supply to the carrier. This will cause all the analog circuit packs in the carrier to fail their loop around tests and may cause failures in circuit packs in the control complex. After the circuit pack has been replaced, look for alarms against these maintenance objects. If ANL-LINE alarms exist, then refer to Test #47 (Loop Around and Conference Test) in ANL-LINE maintenance documentation. For CO-TRK alarms, refer to Test #33 (Loop Around and Conference Test) in CO-TRK Maintenance documentation.

Hardware Error Log Entries and Test to Clear Values

Carrier Port Power Supply Error Log Entries

Error Type	Aux Data	Associated Test	Alarm Level	On/Off Board	Test to Clear Value
1(a)	0 or 1	OLS Query Test (#127)	MAJOR	ON	test environment *UU* r 2 recycle carrier *UUC*

Notes:

WARNING:
The OLS Recycle Test (#126) is destructive. For more information, refer to the description of this test.

a. Run the OLS Query Test (#127) first using the **test environment** UU**r 2** command. Then, if a carrier must be recycled to clear the CARR-POW alarm, use the **recycle carrier** UUC command to run the OLS Recycle Test (#126). The OLS Recycle Test (#126) is not included in either the long or short test sequences.

System Technician-Demanded Tests: Descriptions and Error Codes

Always investigate tests in the order presented in the table below when inspecting errors in the system. By clearing error codes associated with the *Battery & Battery Charger Query Test*, for example, you may also clear errors generated from other tests in the testing sequence.

Order of Investigation	ShortTest Sequence	LongTest Sequence	D/ND*
Battery & Battery Charger Query Test (#5) (a)	X	X	ND
AC Power Query Test (#78) (b)	X	X	ND
OLS Query Test (carrier E) (#127)	X	X	ND
OLS Query Test (carrier D) (#127)	X	X	ND
OLS Query Test (carrier A) (#127)	X	X	ND
OLS Query Test (carrier B) (#127)	X	X	ND
OLS Query Test (carrier C) (#127)	X	X	ND
OLS Recycle Carrier Test (#126)			D
Emergency Transfer Query Test (#124) (c)	X	X	ND
Cabinet Temperature Query Test (#122) (d)	X	X	ND
External Alarm Lead Query Test (#120) (e)	X	X	ND
Analog Ring Generator Initialization Test (#117) (f)	X	X	ND
Analog Ring Generator Query Test (#118) (f)	X	X	ND

* D = Destructive; ND = Nondestructive

Notes:

a. Refer to POWER (Battery & Battery Charger) section for a description of this test.

b. Refer to AC-POWER (AC Power) section for a description of this test.

c. Refer to EMG-XFER (Emergency Transfer) section for a description of this test.

d. Refer to CABINET (Cabinet Sensors) section for a description of this test.

e. Refer to EXT-DEV section for a description of this test.

f. Refer to RING-GEN (Analog Ring Generator) section for a description of this test.

OLS Recycle Test (#126)

This test is destructive.

This test removes power from the specified carrier and causes all circuit packs in the recycled carrier to be removed and inserted. These actions cause all calls originating or terminating on circuit packs in this carrier to be dropped. The pair of OLSs in the specified carrier is recycled. Both OLSs in the carrier are turned off for 2 seconds and then back on again. After the OLSs have been turned back on, the test queries the SYSAM in a PPN or the EPN Maintenance circuit pack in an EPN for the status of the pair of OLSs in the specified carrier. If both OLSs are on and functioning, then the test passes. If both OLSs are not on and functioning, the test fails, and BOTH OLSs are turned off.

Table 9-65. TEST #126 OLS Recycle Test

Error Code	Test Result	Description/ Recommendation
1000	ABORT	System resources required to run this test are not available. 1. Retry the command at 1 minute intervals a maximum of 5 times. 2. If the test continues to abort, escalate the problem.
1366	ABORT	Indicates that the Active Tone/Clock for the EPN is in requested carrier. 1. If duplicated Tone/Clock boards exist, issue the **set tone-clock** command to switch Tone/Clocks, otherwise the power cannot be recycled. 2. If the switch succeeds, rerun the test.
1367	ABORT	Indicates that the Active EI link for the EPN is in requested carrier. 1. If duplicated EIs exist, issue the **reset pnc interchange** command to switch EIs, otherwise the power cannot be recycled. 2. If the switch succeeds, rerun the test.
2000	ABORT	Response to the test request was not received within the allowable time period. 1. Retry the command at 1 minute intervals a maximum of 5 times. 2. If the test continues to abort, escalate the problem.

Continued on next page

Table 9-65. TEST #126 OLS Recycle Test — *Continued*

Error Code	Test Result	Description/ Recommendation
2029 2319 2320 2500	ABORT	Internal System Error 1. Retry the command at 1 minute intervals a maximum of 5 times. 2. If the test continues to abort, escalate the problem.
	FAIL	There is a problem with one or both OLSs on the recycled carrier. 1. Since the OLS Recycle Test failed, both OLSs in the recycled carrier should have been powered off by the system software. Both OLSs should be showing a red status LED, instead of a yellow one. Since the OLS Query Test is a subset of the OLS Recycle Test, the OLS Query Test (#127) should also fail. Run the OLS Query Test by using the **test environment UU** command where UU is the appropriate cabinet number. 2. If test #127 fails, follow the repair procedures described for Test #127.
	PASS	Both OLSs in the recycled carrier were found to be healthy by the SYSAM in a PPN or the EPN Maintenance circuit pack in an EPN after the OLSs were powered down and back up. If the status LEDs on both OLSs are not showing amber, then the SYSAM or the EPN MAINT (Maintenance) circuit pack may have incorrectly reported the state of the OLSs. Look for and resolve any alarms on these MOs.

Off-Line Switcher (OLS) Query Test (#127)

This test queries the SYSAM in a PPN or the EPN Maintenance circuit pack in an EPN for the status of the pair of OLSs in the specified carrier. If both OLSs are on and functioning, then the test passes. If both are not on and functioning, it fails.

Table 9-66. TEST #127 OLS Query Test

Error Code	Test Result	Description/ Recommendation
1000	ABORT	System resources required to run this test are not available. 1. Retry the command at 1 minute intervals a maximum of 5 times. 2. If the test continues to abort, escalate the problem.
2000	ABORT	Response to the test request was not received within the allowable time period. 1. Retry the command at 1 minute intervals a maximum of 5 time. 2. If the test continues to ABORT with error code 2000, check for system powering problems with the A carrier (PPN or EPN). Look for and resolve all AC-POWER and CARR-POW alarms in a multicarrier cabinet system or DC-POWER alarms in a single carrier cabinet system. Then, repeat the test. 3. If the test continues to ABORT with a 2000 error code, check for and resolve all SYSAM errors in the PPN or MAINT (EPN Maintenance circuit pack) errors in an EPN. Then, repeat the test. 4. If the test continues to ABORT with a 2000 error code, then escalate the problem.
2029 2500	ABORT	Internal System Error 1. Retry the command at 1 minute intervals a maximum of 5 times. 2. If the test continues to abort, escalate the problem.

Continued on next page

Table 9-66. TEST #127 OLS Query Test — *Continued*

Error Code	Test Result	Description/ Recommendation
	FAIL	AC POWERED SYSTEMS There is a problem with one or both OLSs on the tested carrier. 1. For each OLS that has all status LEDs OFF, check the AC input to the OLS at the OLS outlet. If there is no AC, then check the appropriate fuses for the affected OLS. If the fuses are blown out, replace the fuses. Use Figure 9-9 through Figure 9-12 to locate the appropriate fuses. If the fuses blow out again or AC does not show up at the OLS outlet, then there is probably a power wiring problem in the cabinet. Follow normal escalation procedures. 2. At this point AC should be present at the OLS outlet. Use the **recycle carrier UUC** command (where *UUC* is the appropriate cabinet and carrier) in an attempt to bring back the OLSs for this carrier. If the test passes, the trouble is cleared. If the test does not pass, one OLS or both, in the tested carrier is defective. If only one OLS is defective, then the status LEDs on the healthy OLS will light green for a moment. When the recycle test determines that both OLSs are defective, the software will turn off power to both the good and defective OLSs. This will cause the status LED(s) on the good OLS to light red. 3. Unplug both OLSs, and wait approximately 1 minute to allow the OLSs to cool down. Plug in the OLSs. If either OLS is operating properly (that is, the status LEDs show green), then replace the defective OLS(s). See OLS Replacement Procedures in this section.

Continued on next page

Table 9-66. TEST #127 OLS Query Test — *Continued*

Error Code	Test Result	Description/ Recommendation
	FAIL *(cont'd.)*	4. If the replaced OLS(s) still do not operate properly, then a circuit pack or a defective telephone connected to a circuit pack in the affected carrier could be causing an electrical load which is preventing the OLS from operating properly. Unseat all the circuit packs in the carrier, and reissue the **recycle carrier** command. a. If the recycle passes, then the OLSs are healthy, and the problem is with one of the circuit packs. Reinsert the circuit packs one at a time. If the status LED shows red after reinserting a circuit pack, then replace the defective circuit pack. If the status LED still shows red, then remove the amphenol connector on the back of the slot containing this circuit pack and reissue the **recycle carrier** command. If the status LED shows green, then the problem is with one of the telephones or the wiring to one of the telephones on this slot. If the status LED still shows red, then escalate the problem. b. If either OLS still shows a red status LED, then check for bent pins and cable placement in the affected carrier. There are failures that can occur on the SYSAM and EPN Maintenance circuit pack that *will not* be detected by their respective maintenance, but which will cause many, if not all, environment tests to fail. If many environment tests are failing, the suspect circuit pack, depending on the system configuration, should be replaced and the test rerun. If no other problems can be found, then escalate the problem.

Continued on next page

Table 9-66. TEST #127 OLS Query Test — *Continued*

Error Code	Test Result	Description/ Recommendation
	FAIL	DC POWERED SYSTEMS There is a problem with one or both port carrier power supplies on the tested carrier. 1. For each port carrier power supply that has all status LEDs OFF, check the DC input to the port carrier power supply at the port carrier power supply outlet (see Figure 9-14 through Figure 9-16). If there is no DC, then check the appropriate circuit breakers for the affected port carrier power supply. If the circuit breaker has tripped (that is, it is in the down position), reset the circuit breaker. If the circuit breaker trips again or DC is not present at the port carrier power supply outlet, then there is probably a power wiring problem in the cabinet. Follow normal escalation procedures. 2. At this point, DC should be present at the port carrier power supply outlet. Use the **recycle carrier UUC** command (where *UUC* is the appropriate cabinet and carrier) in an attempt to bring back the port carrier power supplies for this carrier. If the test passes, the trouble is cleared. If the test does not pass, one port carrier power supply, or both, in the tested carrier is defective. If only one port carrier power supply is defective, then the status LEDs on the healthy port carrier power supply will light green for a moment. When the recycle test determines that both port carrier power supplies are defective, the software will turn off power to both the good and defective port carrier power supplies. This will cause the status LED(s) on the good port carrier power supply to light red.

Continued on next page

Table 9-66. TEST #127 OLS Query Test — *Continued*

Error Code	Test Result	Description/ Recommendation
	FAIL *(cont'd.)*	3. Unplug both port carrier power supplies, and wait approximately 1 minute to allow the port carrier power supplies to cool down. Plug in the port carrier power supplies. If either port carrier power supply is operating properly (that is, the status LEDs show green), then replace the defective port carrier power supply(s). See "Replacing Carrier Port Power Supplies" on page C-28 above. 4. If the replaced port carrier power supply(s) still does(do) not operate properly, then a circuit pack or a defective telephone connected to a circuit pack in the affected carrier could be causing an electrical load which is preventing the port carrier power supply from operating properly. Unseat all the circuit packs in the carrier, and reissue the **recycle carrier** command.

Continued on next page

Table 9-66. TEST #127 OLS Query Test — *Continued*

Error Code	Test Result	Description/ Recommendation
	FAIL *(cont'd.)*	a. If the recycle passes, then the port carrier power supplies are healthy, and the problem is with one of the circuit packs. Reinsert the circuit packs one at a time. If the status LED shows red after reinserting a circuit pack, then replace the defective circuit pack. If the status LED still shows red, then remove the amphenol connector on the back of the slot containing this circuit pack and reissue the **recycle carrier** command. If the status LED shows green, then the problem is with one of the telephones or the wiring to one of the telephones on this slot. If the status LED still shows red, then escalate the problem. b. If either port carrier power supply still shows a red status LED, then check for bent pins and cable placement in the affected carrier. There are failures that can occur on the SYSAM and EPN Maintenance circuit pack that *will not* be detected by their respective maintenance, but which will cause many, if not all, environment tests to fail. If many environment tests are failing, the suspect circuit pack, depending on the system configuration, should be replaced and the test rerun. If no other problems can be found, then escalate the problem.

Continued on next page

Table 9-66. TEST #127 OLS Query Test — *Continued*

Error Code	Test Result	Description/ Recommendation
	PASS	AC POWERED SYSTEMS Both OLSs in the tested carrier were found to be healthy by the SYSAM in a PPN or the EPN Maintenance circuit pack in an EPN. If the status LEDs on both OLSs are not showing green, then the SYSAM or the EPN MAINT (Maintenance) circuit pack may have incorrectly reported the state of the OLSs. Look for and resolve any alarms on these MOs. DC POWERED SYSTEMS Both port carrier power supplies in the tested carrier were found to be healthy by the SYSAM in a PPN or the EPN Maintenance circuit pack in an EPN. If the status LEDs on both port carrier power supplies are not showing green, then the SYSAM or EPN MAINT (Maintenance) circuit pack may have incorrectly reported the state of the port carrier power supplies. Look for and resolve any alarms on these MOs.

CDR-LNK (Call Detail Recording Link)

MO Name As It Appears In Alarm Log	Alarm Level	Initial System Technician Command To Run	Full Name of MO
CDR-LINK	MINOR	test cdr [primary/secondary] l	CDR Link
CDR-LINK	WARNING	test cdr [primary/secondary]	CDR Link

Refer to the PRI-CDR/SEC-CDR (Primary and Secondary CDR Links) section for Call Detail Recording Link problems.

CLSFY-BD (Call Classifier Circuit Pack)

MO Name As It Appears In Alarm Log	Alarm Level	Initial System Technician Command To Run (a)	Full Name of MO
CLSFY-BD	MIN	test board UUCSS sh	Call Classifier Circuit Pack
CLSFY-BD	WRN	test board UUCSS sh	Call Classifier Circuit Pack

a. 4UU is the universal cabinet number (1 for PPN, 2 -22 for EPNs). C is the carrier designation (A, B, C, D, or E). SS is the number of the slot in which the circuit pack resides (01 to 21).

Refer to XXX-BD (Common Port Circuit Pack) Maintenance documentation for circuit pack level errors. See also Call Classifier Port (CLSFY-PT) Maintenance documentation for related port information.

CLSFY-PT (Call Classifier Port)

MO Name As It Appears In Alarm Log	Alarm Level	Initial System Technician Command To Run (a)	Full Name of MO
CLSFY-PT(a)	MAJOR	test port UUCSSpp sh	Call Classifier Port
CLSFY-PT	MINOR	test port UUCSSpp sh	Call Classifier Port
CLSFY-PT	WARNING	test port UUCSSpp sh	Call Classifier Port

a. UU is the universal cabinet number (1 for PPN, 2 -22 for EPNs). C is the carrier designation (A, B, C, D, or E). SS is the number of the slot in which the circuit pack resides (01 to 21). pp is the two digit port number (01, 02, ...).

The TN744 Call Classifier is a service circuit pack that provides specialized tone detection capabilities to support the Outbound Call Management (OCM) and Inbound Call Management (ICM) features. On G3r V2 systems, the TN744 also supports R2 Multifrequency Compelled signaling (R2-MFC) for incoming and outgoing features. R2-MFC is a flexible and robust signaling scheme used in international and national voice-switched networks. Outgoing R2-MFC is a method of transmitting address digits for an outgoing call. Incoming R2-MFC is a method of receiving address digits for an incoming call. The TN744 supports both A-law and mu-law companding.

The TN744 has eight ports (CLSFY-PTs), each capable of supporting call classification, touch-tone reception and MFC-tone generation and detection [G3r V2]. The CLSFY-PT maintenance object implements a set of tests designed to ensure proper operation of the Call Classifier.

Hardware Error Log Entries and Test to Clear Values

Call Classifier Port (CLSFY-PT) Error Log Entries					
Error Type	**Aux Data**	**Associated Test**	**Alarm Level**	**On/Off Board**	**Test to Clear Value**
1	any	Tone Detector Audit/Update Test (#43)	MAJOR/ MINOR(a)	ON	test port UUCSSpp r 2
18		busyout port	WARNING	OFF	release port UUCSSpp
257(b)	17666	Tone Detection Audit Update Test (#43)	MAJOR/ MINOR(a)	ON	test port UUCSSpp r 3
513(c)	any	Tone Detection Verification Test (#42)	MAJOR/ MINOR(a)	ON	test port UUCSSpp r 3

Notes:

a. There are two possible alarm levels for this error type: MAJOR and MINOR. A major alarm is raised if the total number of Call Classifier ports currently in-service is less than or equal to 1/2 of the administered threshold number. Otherwise, a minor alarm is raised. In either case, run the short test sequence on the alarmed port and follow the error code procedures for the individual tests.

   The in-service threshold number for alarming call classifier ports is administered using the **change system-parameters maintenance** command. For details, refer to Chapter 8, "Maintenance Commands".

b. The CLSFY-PT lost its translation. Testing the CLSFY-PT is sufficient to reload its translation. If testing the Call Classifier port does not clear the error, then the Call Classifier circuit pack containing the defective Call Classifier port should be replaced.

c. This error indicates the Call Classifier port is having problems detecting call classification tones or detecting and generating R2-MFC tones This is usually accompanied by failures of some incoming or outgoing calls. If this error type is persistently logged, then the Call Classifier circuit pack containing the defective CLSFY-PT should be replaced.

System Technician-Demanded Tests: Descriptions and Error Codes

Always investigate tests in the order presented in the following tables when inspecting errors in the system. By clearing error codes associated with the *Tone Detection Verification Test*, for example, you may also clear errors generated from other tests in the testing sequence.

Order of Investigation	ShortTest Sequence	LongTest Sequence	D/ND*
Tone Detection Verification Test(#42)	X	X	ND
Tone Detection Audit/Update Test(#43)	X	X	ND

* D = Destructive; ND = Nondestructive

Tone Detection Verification Test (#42)

This test checks the operation of the TN744 in touch-tone receiver, call classifier and R2-MFC modes. It verifies the circuit pack's ability to detect DTMF, ring back, busy reorder and modem answer tones and to generate and detect forward and backward MFC tones.

Table 9-67. TEST #42 Tone Detection Verification Test

Error Code	Test Result	Description/ Recommendation
none	ABORT	The system was not able to allocate all the resources needed for this test OR there was an Internal System Error.
1	ABORT	The system could not allocate all the resources needed to test the tones.
1001	ABORT	The system was unable to put the Call Classifier port in the appropriate mode to test it.
1002	ABORT	The system could not allocate time slots for the test connection. This situation could occur when the system is heavily loaded. If the system is not heavily loaded, then test the TDM-BUS via the **test tdm** command. Refer to TDM-BUS for details. 1. Retry the command at 1-minute intervals a maximum of 5 times. 2. If the test continues to abort, escalate the problem.
1003	ABORT	The system could not allocate a Tone-Clock for the test connection. This may be caused by a heavy load on the system or by a faulted Tone-Clock. 1. Check to see if there are any alarms against the Tone-Clock in the port network where the test aborted. If so refer to the recommended procedures for TONE-BD or TONE-PT. 2. If a new Tone-Clock has been inserted, allow about 1 minute for maintenance to run on the newly inserted circuit pack. 3. Retry the command at 1-minute intervals a maximum of 5 times. 4. If the test continues to abort, escalate the problem.

Continued on next page

Table 9-67. TEST #42 Tone Detection Verification Test — *Continued*

Error Code	Test Result	Description/ Recommendation
2000	ABORT	Call Classifier Circuit Pack's response to the test request was not received within the allowable time period. 1. Retry the command at 1-minute intervals a maximum of 5 times. 2. If the test continues to abort, escalate the problem.
2006	ABORT	This abort code indicates that the active Tone-Clock circuit pack or a Tone Detector circuit pack may not be functioning properly. On G3r V2 systems, this abort can also be caused by a mismatch between the companding mode administered for the system and that of the Tone Detector circuit pack. 1. [G3r V2] Make sure that the companding mode of the system matches that of the Tone Detector: mu-law for TN748; A-law for TN420. 2. Test the *active* Tone-Clock circuit pack in the port network with the **test tone-clock** UUC command and refer to the TONE-BD section for failures. 3. Retry the command at 1-minute intervals a maximum of five times. 4. If the test continues to abort, escalate the problem.
2100	ABORT	Could not allocate the necessary system resources to run this test. 1. Retry the command at 1-minute intervals a maximum of 5 times. 2. If the test continues to abort, escalate the problem.
1-3	FAIL	DTMF digits were not detected correctly. This may or may not impact reception of R2-MFC calls. 1. Run the short test sequence via the **test port UUCSSpp sh r 1** command. 2. If the problem persists, the system is still operating properly but capacity will be reduced. To restore performance to normal, replace the Call Classifier circuit pack containing the defective CLSFY-PT (Call Classifier Port).

Continued on next page

Table 9-67. TEST #42 Tone Detection Verification Test — *Continued*

Error Code	Test Result	Description/ Recommendation
102	FAIL	2225 Hz Modem Answer Tone was not detected correctly. This will impact call-classification operation. 1. Run the short test sequence via the **test port UUCSSpp sh r 1** command. 2. If the problem persists, the system can still operate properly but capacity will be reduced. In order to restore performance to normal, replace the Call Classifier circuit pack containing the defective port.
130	FAIL	Forward or Backward R2-MFC signals were not correctly generated or detected. This will impact R2-MFC calls. 1. Run the short test sequence via the **test port UUCSSpp sh r 1** command. 2. If the problem persists, the system can still operate properly but capacity will be reduced. In order to restore performance to normal, replace the Call Classifier circuit pack containing the defective port.
	PASS	Tone Detection Verification is successful. The Call Classifier Port is able to detect and generate all necessary tones.

Tone Detector Audit/Update Test (#43)

This test performs a sanity audit on the CLSFY-PT (Call Classifier Port).

Table 9-68. TEST #43 Tone Detector Audit/Update Test

Error Code	Test Result	Description/ Recommendation
none	ABORT	The system was not able to allocate all the resources needed for this test. 1. Wait 1 minute, and repeat the command a maximum of 5 times.
2000	ABORT	Response to the test request was not received within the allowable time period.
2100	ABORT	Could not allocate the necessary system resources to run this test. 1. Retry the command at 1-minute intervals a maximum of 5 times. 2. If the test continues to abort, escalate the problem.
	FAIL	Hardware audit failed. 1. Run the short test sequence via the **test port UUCSSpp sh r 1** command. 2. If the problem persists, the system is still operating properly but system capacity will be reduced. In order to restore system performance to normal, replace the Call Classifier circuit pack (CLSFY-BD) containing the defective Call Classifier Port.
	PASS	The Call Classifier Port has passed the sanity inquiry.

CO-BD (Central Office Trunk Circuit Pack)

MO Name As It Appears In Alarm Log	Alarm Level	Initial System Technician Command To Run (a)	Full Name of MO
CO-BD	MIN	test board UUCSS sh	Central Office Trunk Circuit Pack
CO-BD	WRN	test board UUCSS sh	Central Office Trunk Circuit Pack

a. UU is the universal cabinet number (1 for PPN, 2 -22 for EPNs). C is the carrier designation (A, B, C, D, or E). SS is the number of the slot in which the circuit pack resides (01 to 21).

Refer to XXX-BD (Common Port Circuit Pack) Maintenance documentation for circuit pack level errors. See also CO-TRK (CO Trunk) Maintenance documentation for related trunk information.

CO-DS1 (DS1 CO Trunk)

MO Name As It Appears In Alarm Log	Alarm Level	Initial System Technician Command To Run (a)	Full Name of MO
CO-DS1	MAJOR*	test trunk *group# member#* l	DS1 CO Trunk
CO-DS1	MINOR	test trunk *group# member#* l	DS1 CO Trunk
CO-DS1	WARNING	test trunk *group# member#*	DS1 CO Trunk

* A Major alarm on a trunk indicates that alarms on these trunks are not downgraded by the **set options** command and that at least 75 percent of the trunks in this trunk group are alarmed. For more information on the **set options** command, see Chapter 8, "Maintenance Commands".

NOTE:
Many trunk problems are caused by incorrect settings of parameters on the trunk group administration form. Settings must be compatible with the local environment and with parameter settings on the far-end. Refer to *DEFINITY Communications System Generic 3 V2 Implementation,* 555-230-653, for information on how to administer trunks. The Application Notes section of that book shows the correct settings for administrable timers and other parameters on a country-by-country basis.

A DS1 CO (central office) trunk provides a link for digitized voice or data communications between the system and a central office switch. There are two types of DS1 interfaces:

- 24 DS0 channels on a 1.544 Mbps link
- 31 DS0 channels + 1 framing channel on a 2.048 Mbps link
- 32-channel mode is supported only on TN464 circuit packs and on G3r V2 systems.

The DS1-CO maintenance object monitors and maintains a CO trunk port on either a TN767 DS1 Interface circuit pack or a TN464 UDS1 Interface circuit pack. Throughout this discussion, the term DS1 circuit pack applies to both. See DS1-BD and UDS1-BD in this chapter for more information about these circuit packs. The DS1 circuit pack supports low level CO trunk signaling interfaces for both ground-start and loop-start trunks. This maintenance strategy covers the in-line errors log, initialization tests, periodic tests, scheduled tests, demand tests, and alarm resolution and escalation.

Three trunk service states are specified by DS1 CO trunk maintenance:

out-of-service	The trunk is in a deactivated state and cannot be used for either incoming or outgoing calls.
in-service	The trunk is in an activated state and can be used for both incoming and outgoing calls.
disconnect (ready-for-service)	The trunk is in an activated state but can only be used for an incoming call.

Hardware Error Log Entries and Test to Clear Values

DS1 CO Trunk Error Log Entries					
Error Type	**Aux Data**	**Associated Test**	**Alarm Level**	**On/Off Board**	**Test to Clear Value**
0*	0	Any	Any	Any	test trunk <grp>/<mbr>
1(a)	57408				
1(a)	57487				
15(b)	Any	Port Audit and Update Test (#36)			
18(c)	0	busyout trunk <grp>/<mbr>	WARNING	OFF	release trunk <grp>/<mbr>
130(d)		None	WARNING	ON	test trunk <grp>/<mbr>
257(e)	57392				
513(f)	57393				
769(g)	57484				
1025		DS1 CO Dial Tone Seizure Test (#314)	MIN/ WRN**	OFF	test trunk <grp>/<mbr> r 2
1281		Conference Circuit Test (#7)	MIN/ WRN**	ON	test trunk <grp>/<mbr> l r 4
1537		NPE Crosstalk Test (#6)	MIN/ WRN**	ON	test trunk <grp>/<mbr> l r 3
1793(h)					test board UUCSS l
2562(i)	16665				
2817(j)	52992				
3840(k)		Port Audit and Update Test (#36)			

* Run the Short Test Sequence first. If all tests pass, run the Long Test Sequence. Refer to the appropriate test description and follow the recommended procedures.

† Major alarms on this MO may be downgraded to Warning alarms based on the value used in the set options command.

Notes:

a. Aux Data 57408—No tip ground is detected on an outgoing call.

   Aux Data 57487—PBX could not get ‘‘loop close’’ signal.

   The DS1 Interface circuit pack detected a hardware fault. These errors will cause the Dial Tone Test (#314) to run and are only considered a problem if the Dial Tone Test fails (in which case Error Type 1025 will also show up). In this case, the trunk may be put in the ready-for-service state (shown as ‘‘disconnected’’ by the status command), which allows only incoming calls. Run the Dial Tone Test (#314) and follow the procedures.

b. This is a software audit error that does not indicate any hardware malfunction. Run Short Test Sequence and investigate associated errors (if any).

c. System Technician has busied out the trunk to the out-of-service state. No calls can be made on this trunk except the Facility Access Test Call. For details on this feature, refer to the "Facility Test Calls" section in Chapter 6, "Additional Maintenance Procedures".

d. This error type indicates that the circuit pack has been removed or has been insane for more than 11 minutes. To clear the error, reinsert or replace the circuit pack.

e. The DS1 Interface circuit pack detects a hardware fault. Aux Data 57392 indicates no external release on PBX disconnect. Escalate the problem.

f. The DS1 Interface circuit pack detects a hardware fault. Aux Data 57393 indicates belated external release on PBX disconnect. Escalate the problem.

g. The DS1 Interface circuit pack detects a hardware fault. The Aux Data field contains the following error type:—57484, fault is detected on tip/ring. Escalate the error.

h. DS1 Interface circuit pack is out-of-service. Look for DS1-BD errors in the Hardware Error Log if the port is on a TN767 DS1 board. Look for UDS1-BD errors in the Hardware Error Log if the port is on a TN464 UDS1 board. Refer to the DS1-BD or UDS1-BD (DS1 Trunk Circuit Pack) Maintenance documentation for details.

i. Retry Failure error. This error is logged only. It is not a hardware failure and hence does not start any testing or generate any alarms. This error comes from call processing and is generated when a second attempt (retry) to seize an outgoing trunk fails.

j. Glare error. This error is logged only. It is not a hardware failure and hence does not start any testing or generate any alarms. This error is the result of a simultaneous seizure of a two-way trunk from both the near-end and the far-end. Attempt to place the call again. If the error persists, execute the Dial Tone Seizure Test (#314) and follow those procedures.

k. Port Audit and Update Test (#36) failed due to an internal system error. Enter the **status trunk** command to verify the status of the trunk. If the trunk is out-of-service, then enter the **release trunk** command to put it back into in-service. Retry the test command. If the test continues to abort, then escalate the problem.

System Technician-Demanded Tests: Descriptions and Error Codes

Always investigate tests in the order they are presented in the table below when inspecting errors in the system. By clearing error codes associated with the *NPE Crosstalk Test,* for example, you may also clear errors generated from other tests in the testing sequence.

Order of Investigation	ShortTest Sequence	LongTest Sequence	D/ND*
NPE Crosstalk Test (#6)		X	ND
Conference Circuit Test (#7)		X	ND
DS1 CO Trunk Seizure Test (#314)	X	X	ND
Port Audit and Update Test (#36)	X	X	ND

* D = Destructive; ND = Nondestructive

NPE Crosstalk Test (#6)

One or more Network Processing Elements (NPEs) resides on each circuit pack with a TDM Bus interface. (The TN464 UDS1 circuit pack has one SCOTCH-NPE chip instead of several NPE chips.) The NPE controls port connectivity and gain, and provides conferencing functions on a per-port basis. The NPE Crosstalk Test verifies that this port's NPE channel talks on the selected time slot and never crosses over to time slots reserved for other connections. If the NPE is not working correctly, one-way and noisy connections may be observed. This test is usually only part of a port's Long Test Sequence and takes about 20 to 30 seconds to complete.

Table 9-69. TEST #6 NPE Crosstalk Test

Error Code	Test Result	Description/ Recommendation
	ABORT	System resources required for this test are not available. 1. Retry the command at 1-minute intervals a maximum of 5 times. 2. If the test continues to abort, escalate the problem.
1000	ABORT	System resources required to run this test are not available. The port may be in use on a valid call. Use the **status station** or **status trunk** command to determine when the port is available for testing. 1. Retry the command at 1-minute intervals a maximum of 5 times. 2. If the test continues to abort, and the port is not in use, escalate the problem.
1001	ABORT	System resources required for this test are not available. 1. Retry the command at 1-minute intervals a maximum of 5 times. 2. If the test continues to abort, escalate the problem.

Continued on next page

Table 9-69. TEST #6 NPE Crosstalk Test — *Continued*

Error Code	Test Result	Description/ Recommendation
1002	ABORT	The system could not allocate time slots for the test. The system may be under heavy traffic conditions or it may have time slots out-of-service due to TDM-BUS errors. The **status health** command can be used to determine if the system is experiencing heavy traffic. Refer to the TDM-BUS (TDM Bus) Maintenance documentation to diagnose any active TDM-BUS errors. 1. If system has no TDM-BUS errors and is not handling heavy traffic, repeat test at 1-minute intervals a maximum of 5 times. 2. If the test continues to abort, escalate the problem.
1003	ABORT	The system could not allocate a tone receiver for the test. The system may be oversized for the number of Tone Detectors present or some tone detectors may be out-of-service. The **list measurements tone-receiver** command will display information on the system's tone receivers. 1. Look for TTR-LEV errors in the Error Log. If present, refer to TTR-LEV (TTR Level) Maintenance documentation. 2. Look for TONE-PT errors in the Error Log. If present, refer to TONE-PT (Tone Generator) Maintenance documentation. 3. If neither condition exists, retry the test at 1-minute intervals a maximum of 5 times. 4. If the test continues to abort, escalate the problem.
1004	ABORT	The port has been seized by a user for a valid call. Use the **status trunk** command to determine when the port is available for testing. 1. Retry the command at 1-minute intervals a maximum of 5 times. 2. If the test continues to abort, and the port is not in use, escalate the problem.

Continued on next page

Table 9-69. TEST #6 NPE Crosstalk Test — *Continued*

Error Code	Test Result	Description/ Recommendation
1020	ABORT	The test did not run due to a previously existing error on the specific port or a more general circuit pack error. 1. Examine Error Log for existing errors against this port or the circuit pack and attempt to diagnose the already existing error.
2000	ABORT	Response to the test request was not received within the allowable time period.
2100	ABORT	System resources required for this test are not available. 1. Retry the command at 1-minute intervals a maximum of 5 times. 2. If test continues to abort, escalate the problem.
	FAIL	The NPE of the tested port was found to be transmitting in error. This will cause noisy and unreliable connections. 1. Replace the circuit pack.
	PASS	The port is correctly using its allocated time slots. User-reported troubles on this port should be investigated using other port tests and examining station, trunk, or external wiring.

Conference Circuit Test (#7)

One or more Network Processing Elements (NPEs) reside on each circuit pack with a TDM Bus interface. (The TN464 UDS1 circuit pack has one SCOTCH-NPE chip instead of several NPE chips). The NPE controls port connectivity and gain, and provides conferencing functions on a per-port basis. The Conference Circuit Test verifies that the NPE channel for the port being tested can correctly perform the conferencing function. The NPE is instructed to listen to several different tones and conference the tones together. The resulting signal is then measured by a tone detector port. If the level of the tone is within a certain range, the test passes.

Table 9-70. TEST #7 Conference Circuit Test

Error Code	Test Result	Description/ Recommendation
	ABORT	System resources required for this test are not available. 1. Retry the command at 1-minute intervals a maximum of 5 times. 2. If the test continues to abort, escalate the problem.
1000	ABORT	System resources required to run this test are not available. The port may be in use on a valid call. Use the **status station** or **status trunk** command to determine when the port is available for testing.
1004	ABORT	The port has been seized by a user for a valid call. Use the **status station** or **status trunk** command to determine when the port is available for testing. 1. Retry the command at 1-minute intervals a maximum of 5 times. 2. If the test continues to abort, and the port is not in use, escalate the problem.
1018	ABORT	Test disabled via administration. This only applies to analog stations. 1. To enable test, set the Test field on the station administration screen for the particular analog station being tested to “y.” Use the **change station extension** command.

Continued on next page

Table 9-70. TEST #7 Conference Circuit Test — *Continued*

Error Code	Test Result	Description/ Recommendation
1020	ABORT	The test did not run due to a previously existing error on the specific port or a more general circuit pack error. 1. Examine Error Log for existing errors against this port or the circuit pack and attempt to diagnose the previously existing error.
2000	ABORT	Response to the test request was not received within the allowable time period.
2100	ABORT	System resources required for this test are not available. 1. Retry the command at 1-minute intervals a maximum of 5 times. 2. If the test continues to abort, escalate the problem.
	FAIL	The NPE of the tested port did not conference the tones correctly. This will cause noisy and unreliable connections. 1. Replace the circuit pack.
	PASS	The port can correctly conference multiple connections. User-reported troubles on this port should be investigated by using other port tests and by examining station, trunk, or external wiring.

Port Audit and Update Test (#36)

This test sends port level translation data from switch processor to the DS1 Interface circuit pack to assure that the trunk's translation is correct. Translation updates include the following data: trunk type (in/out), dial type, timing parameters, and signaling bits enabled. The port audit operation verifies the consistency of the current state of trunk kept in the DS1 Interface circuit pack and in the switch software.

Table 9-71. TEST #36 Port Audit and Update Test

Error Code	Test Result	Description/ Recommendation
	ABORT	Internal System Error 1. Retry the command at 1-minute intervals a maximum of 5 times. 2. If the test continues to abort, escalate the problem.
2000	ABORT	Response to the test request was not received within the allowable time period.
2100	ABORT	Could not allocate the necessary system resources to run this test.
	FAIL	Test failed due to internal system error. 1. Retry the command at 1-minute intervals a maximum of 5 times. 2. If test continues to fail, escalate the problem.
	PASS	Trunk translation has been updated successfully. The current trunk states kept in the DS1 Interface circuit pack and switch software are consistent. If the trunk is busied out, the test will not run but will return PASS. To verify that the trunk is in-service: 1. Enter the **status trunk** command to verify that the trunk is in-service. If the trunk is in-service, no further action is necessary. If the trunk is out-of-service, continue to step 2. 2. Enter the **release trunk** command to put the trunk back into in-service. 3. Retry the test command.

DS1 CO Dial Tone Seizure Test (#314)

DS1 CO Dial Tone Seizure Test checks the trunk's signaling capability provided by the DS1 Interface circuit pack. The maintenance software initiates the test by sending a ''seizure'' message to the DS1 Interface circuit pack and expects an ''active'' reply from the DS1 interface circuit pack. If the ''active'' message is received, then the test passes. If no message is received and the timer expires, the test is aborted. If the DS1 Interface circuit pack sends a ''reorder'' message back to maintenance software, then the test fails.

This test cannot be run on a trunk in any of the following conditions:

a. The trunk direction is administered as an incoming only trunk.

b. The trunk has been seized by a normal trunk call.

c. The trunk is administered with maintenance test disabled.

Table 9-72. TEST #314 DS1 CO Dial Tone Seizure Test

Error Code	Test Result	Description/ Recommendation
	ABORT	Internal System Error 1. Retry the command at 1-minute intervals a maximum of 5 times. 2. If the test continues to abort, escalate the problem.
1000	ABORT	System resources required to run this test are not available. The port may be in use on a valid call. Use the **status trunk** command to determine when the port is available for testing.
1004	ABORT	The port has been seized by a user for a valid call. Use the **status trunk** command to determine when the port is available for testing. 1. Retry the command at 1-minute intervals a maximum of 5 times. 2. If the test continues to abort, and the port is not in use, escalate the problem.
1005	ABORT	Test failed due to incompatible configuration administered in trunk group form. 1. Look at the trunk group administration form and see whether the trunk is incoming only, port 24 on a DS1 Interface with common control channel signaling, or an automatic CO type such as FX. Under any of these conditions this is a normal abort.

Continued on next page

Table 9-72. TEST #314 DS1 CO Dial Tone Seizure Test — *Continued*

Error Code	Test Result	Description/ Recommendation
1018	ABORT	Test has been disabled via administration. 1. Verify that the ''Maintenance Tests'' field on the Trunk Group Form is set to ''n.'' To enable the test, issue the **change trunk-group x** command where ''x'' equals the number of the trunk group to be tested. Then change the entry in the ''Maintenance Tests'' field on the form to ''y.'' 2. Repeat the test.
1020	ABORT	The DS1 Interface circuit pack is out-of-service. 1. Look for DS1-BD/UDS1-BD errors in the Hardware Error Log. If present, refer to the appropriate DS1-BD/UDS1-BD (DS1/UDS1 Trunk Circuit Pack) Maintenance documentation. 2. Retry the command. 3. If the test continues to abort, escalate the problem.
2000	ABORT	Response to the test request was not received within the allowable time period.
2100	ABORT	Could not allocate the necessary system resources to run this test. 1. Retry the command at 1-minute intervals for a maximum of 5 times. 2. If the test continues to abort, escalate the problem.

Continued on next page

Table 9-72. TEST #314 DS1 CO Dial Tone Seizure Test — *Continued*

Error Code	Test Result	Description/ Recommendation
	FAIL	The trunk cannot be seized for an outgoing call. 1. Verify that the Trunk Type field on the trunk administration screen form matches the trunk type administered on far end switch. 2. Look for DS1-BD/UDS1-BD errors in Hardware Error Log. If present, refer to the appropriate DS1-BD/UDS1-BD (DS1/UDS1 Trunk Circuit Pack) Maintenance documentation. 3. Retry the test at 1-minute intervals for a maximum of 5 times. 4. If the test continues to fail, escalate the problem.
	PASS	The trunk can be seized for an outgoing call.

CO-TRK (Analog CO Trunk)

MO Name As It Appears In Alarm Log	Alarm Level	Initial System Technician Command To Run (a)	Full Name of MO
CO-TRK	MAJOR (b)	test port UUCSSpp l	Analog CO Trunk
CO-TRK	MINOR	test port UUCSSpp l	Analog CO Trunk
CO-TRK	WARNING	test port UUCSSpp l	Analog CO Trunk

a. UU is the universal cabinet number (1 for PPN, 2 -22 for EPNs). C is the carrier designation (A, B, C, D, or E). SS is the number of the slot in which the circuit pack resides (01 to 21). pp is the two digit port number (01, 02, ...).

b. A MAJOR alarm on a trunk indicates that alarms on these trunks are not downgraded by the **set options** command and that at least 75% of the trunks in this trunk group are alarmed.

c. If ATMS testing is enabled, check the error log for ATMS errors 3840 and 3841. If the error log indicates that measurements exceeded acceptable thresholds, and no other trouble is found with **test trunk**, run the ATMS test call with **test analog-testcall port UUCSSpp full**.

NOTE:
Many trunk problems are caused by incorrect settings of parameters on the trunk group administration form. Settings must be compatible with the local environment and with parameter settings on the far-end. Refer to *DEFINITY Communications System Generic 3 V2 Implementation,* 555-230-653, for information on how to administer trunks. The Application Notes section of that book shows the correct settings for administrable timers and other parameters on a country-by-country basis.

Analog central office (CO) trunks are 2-wire analog lines to the CO which support both incoming and outgoing calls. CO trunk circuit packs have eight ports, each of which provides an interface between the 2-wire CO line and the 4-wire TDM bus. G3r V1.1 and V2 support the following CO trunk circuit packs:

TN438	TN2138
TN447	TN2147
TN465	TN2148
TN747	

For more information concerning which circuit packs are required for different environments and locales, see the Application Notes section of *DEFINITY Communications System Generic 3 V2 Implementation,* 555-230-653.

The following sequences show the interactions between the switch and the CO during call setup for both loop-start and ground-start trunks.

Loop Start Operation

Idle State: Tip = ground, Ring = CO Battery **Outgoing Call:**

1. PBX Off-Hook (Seize Message): Closes the Tip-Ring Loop

   CO Response: DC loop current + Dial tone

2. PBX On-Hook (Drop Message): Open Tip-Ring loop, no loop current

   CO Response: CO goes to idle state (see Note)

Incoming Call:

1. CO Applies Ringing Voltage

   PBX Response: Detect ringing current

2. PBX Off-Hook (Answer Message): Close loop

   CO Response: Trip ringing, provide loop current

3. PBX On-Hook (Drop Message): Open Tip-Ring loop, no loop current

   CO Response: CO goes to idle state (see Note)

NOTE:
CO does not normally provide an On-Hook (Disconnect) signal. Exceptions to this rule include Netherlands loop start and UK loop-calling guarded-clearing.

Ground Start Operation

Idle state: Tip = open, Ring = CO Battery **Outgoing Call:**

1. PBX Off-Hook (Seize Message): Places ground on Ring

   CO Response: Places ground on Tip

   PBX Response: Close the loop

   CO Response: Provide loop current

   PBX response: Dial out digits

2. PBX On-Hook first (Drop Message): Open the Tip-Ring Loop, no loop current

   CO Response: Open circuit on Tip

3. CO On-Hook first (Disconnect): Open circuit on Tip, no loop current

   PBX Response: Open Tip-Ring loop

Incoming Call:

1. CO Off-Hook (Seizure): CO applies ground on Tip and applies ringing voltage

   PBX Response: Make trunk busy for outgoing calls

2. CO Ringing: CO applies ringing voltage

   PBX Response: Detect ringing, ring destination

3. PBX Off-Hook (Answer Message): Close loop

   CO Response: Trip ringing, provide loop current

4. PBX On-Hook first (Drop Message): Open the Tip-Ring Loop, no loop current

   CO Response: Open circuit on Tip

5. CO On-Hook first (Disconnect): Open circuit on Tip, no loop current

Error Log Entries and Test to Clear Values

Table 9-73. CO Trunk Error Log Entries

Error Type	Aux Data	Associated Test	Alarm Level	On/Off Board	Test to Clear Value
0*	0	Any	Any	Any	test port *UUCSSpp* sh r 1
1 (a)	57347	None			
15 (b)	any	Port Audit Update Test (#36)			
18	0	busyout trunk	WARNING	OFF	release trunk *grp#/mbr#*
130(c)		None	WARNING	ON	test port *UUCSSpp* sh r 2
257 (a)	50176	None			
513 (a)	57364	None	MAJ/MIN/ WRN†	ON	
769 (a)	57392	None	MAJ/MIN/ WRN†	OFF	
1025 (e)	Any	Demand Diagnostic Test (#3)	MAJ/MIN/ WRN†	OFF	test port *UUCSSpp* sh r 2
1281 (e)	Any	Demand Diagnostic Test (#3)	MAJ/MIN/ WRN†	ON	test port *UUCSSpp* sh r 3
1537		Dial Tone Test (#0)	MAJ/MIN/ WRN†	OFF	test port *UUCSSpp* l r 2
1793		Loop Around and Conference Test (#33	MAJ/MIN/ WRN†	ON	test port *UUCSSpp* l r 3
2049		NPE Cross Talk Test (#6)	MAJ/MIN/ WRN†	ON	test port *UUCSSpp* l r 3
2561 (d)	57345	None			
2817 (a)	57360	None			
2817 (a)	57393	None			

Continued on next page

Table 9-73. CO Trunk Error Log Entries — *Continued*

Error Type	Aux Data	Associated Test	Alarm Level	On/Off Board	Test to Clear Value
2817 (d)	57484	Dial Tone Test(#0)	MAJ/MIN/ WRN	OFF	test port *UUCSSpp* l r 1
3073 (d)	57376	None			
3329 (d)	57408	None			
3329 (d)	57484	Dial Tone Test(#0)	MAJ/MIN/ WRN	OFF	test port *UUCSSpp* l r 1
3585 (d)	57424	None			
3840 (f)	8000	Transmission Tests (ATMS)(#844-848)		OFF	test analog-testcall
3841 (f)		Transmission Tests (ATMS)(#844-848)	MINOR	OFF	test analog-testcall

* Run the Short Test Sequence first. If all tests pass, run the Long Test Sequence. Refer to the appropriate test description and follow the recommended procedures.

† Major alarms on this MO may be downgraded to Warning alarms based on the value used in the set options command.

Notes:

a. These are in-line errors that have no specific test associated with them. Refer toTable 9-74 for an explanation and appropriate action.

b. This is a software audit error that does not indicate any hardware malfunction. Run Short Test Sequence and investigate associated errors (if any).

c. This error type indicates that the circuit pack has been removed or has been insane for at least 11 minutes. To clear the error, reinsert or replace the circuit pack.

d. Aux data 57345 — Single polarity ringing current

   Aux data 57376 — No loop current on incoming call

   Aux data 57408 — No tip ground detected on outgoing call

   Aux data 57424 — No loop current on outgoing call

   Aux data 57484 — No dial tone on outgoing call

   These errors will cause the Dial Tone Test (#0) to run and are only considered a problem if the Dial Tone Test fails (in which case Error Type 1537 will also show up). In this case, the trunk may be put in "Ready-for-Service" state (shown as "disconnected" by status command), which allows only incoming calls. Run the Dial Tone Test (#0) and follow its outlined procedures.

   If error count associated with this error type is very high (i.e., 255) and if Alarm Status on the Hardware Error Report is "n" (not alarmed), then the existence of this error type indicates that, despite the fact that many in-line error messages have been received, all Call Seizure Tests have passed. Problems at the CO may cause this condition rather than problems with the PBX.

e. These errors will be logged for all versions of the CO-TRK/CO-BD. However, no MINOR alarms will be generated for Central Office Trunks [TN747B] with vintages V8 or greater. Any failures received by this test will still be logged as Error type 1025/1281.

   Check for the use of MFT/Range extenders. If there are extenders present, and there are no other complaints or maintenance errors against this trunk, then there is a good chance that Test #3 failed due to excessive loop current and may be ignored.

f. Error 3840 indicates that test calls made by the Automatic Transmission Measurement System (ATMS) returned measurements in the unacceptable range. Error 3841 indicates measurements were in the marginal range. Use **list testcall detail** to examine the specific transmission parameters which are out of spec, and investigate the trunk for that kind of noise. If the noise is acceptable, then the AMTS thresholds administered on page 4 of the trunk group form should be changed.

Table 9-74. CO Trunk Errors with No Tests

Error Type	Aux Data	Error Description and Repair Action
1	57347	Port error. Ringing without ground. This error is detected on an incoming call on a ground-start CO trunk. The CO trunk circuit pack has not detected a Tip ground before ringing current is detected. This may indicate that the ground detector is not working. However, the call will be accepted. Busyout the affected port, and run a long test. Observe the test results. If any tests fail, refer to the description of the tests and the associated error codes. Release the port. If users continue to report troubles, check for other errors and make test calls to determine whether the problem should be escalated or referred to the CO.
257	50176	Battery reversal detected. This is usually caused by the CO (often seen with step-by-step and cross-bar offices in connection with outgoing calls). This is detected if the direction of the loop current changes from normal to reverse for at least 40 msec. Could occur if the trunk was just installed and for some reason the Tip and Ring wires were reversed at the PBX. If battery reversals occur during dialing, wrong numbers may result. Refer problem to CO. Ask them to remove the battery reversal option.
513	57364	Ground detector stuck active. After several occurrences, an on-board minor alarm is generated. Run the short test sequence. If test aborts with Error Code 1000, disconnect Tip and Ring and repeat short test. If test still aborts, replace circuit pack. If test passes, refer problem to CO. If any other error code is received, pursue that problem.
769	57392	CO not releasing after call is dropped from PBX end (TN747B), or the loop is not open after a disconnect (TN765). After several occurrences, an off-board (TN747B) or on-board (TN465) warning alarm is generated. Refer problem to CO.

Continued on next page

Table 9-74. CO Trunk Errors with No Tests — *Continued*

Error Type	Aux Data	Error Description and Repair Action
2561	57345	Single polarity ringing current. This error results from abnormal ringing current, but does not prevent the incoming call from being accepted. One cause could be that the reverse current detector associated with the port is failing. (Will not be detected by any tests.) Another cause could be that normal current is not detected. In this case, neither incoming nor outgoing calls can be completed, and the dial tone test will also fail. The last cause could be that certain types of noise are present on the CO line during the silent period of ringing. First check for other errors. If the count for this error is very high (255), and all tests pass, then either the reverse current detector is defective or the CO line is noisy. If the CO line is suspect, make Tip and Ring observations. If the line is determined to be noisy, refer the problem to the CO. If the reverse current detector is defective, ignore this error.
2817	57360	Ground but no ringing. This error occurs on an incoming call on a ground-start trunk. If ringing is not detected within 5 seconds of the Tip being grounded, the call is still accepted. If the CO is of the No. 5ESS. switch type, ringing delays of more than 5 seconds during heavy traffic are fairly common. Check for other errors.
2817	57393	On the TN465, the loop is opening too slowly after a disconnect. This error indicates an on-board problem, although the trunk may be functional. Check for other errors.

Continued on next page

Table 9-74. CO Trunk Errors with No Tests — *Continued*

Error Type	Aux Data	Error Description and Repair Action
3073	57376	No loop current on incoming call. The incoming destination has already answered and no loop current has been detected. If this is a hard fault, the dial tone test and all outgoing calls should also fail. Check for other errors.
3329	57408	Trunk error. No Tip ground detected on outgoing call. This error occurs when an attempt is made to seize a ground-start CO trunk for an outgoing call and Tip ground is not detected or the caller hangs up before Tip ground is detected. 1. Busyout the affected port, and run a long test. Observe the test results. If any tests fail, refer to the description of the tests and the associated error codes. Release the port. 2. If users continue to report troubles, check for other errors and make test calls to determine whether the problem should be escalated or referred to the CO. Busyout the affected port, and run a long test. If Dial Tone Test #0 passes, ignore this error. Release the port.
3585	57424	No loop current on outgoing call. This error occurs on attempt to seize a loop or ground-start trunk for an outgoing call. An error occurs if loop current is not detected or the caller hangs up before it is detected. Busyout the affected port, and run a long test. If CO Demand Diagnostic Test #3 passes and this error keeps occurring, refer problems to CO. Release the port.

System Technician-Demanded Tests: Descriptions And Error Codes

Always investigate tests in the order they are presented in the table below when inspecting errors in the system. By clearing error codes associated with the *NPE Crosstalk Test,* for example, you may also clear errors generated from other tests in the testing sequence.

Order of Investigation	Short Test Sequence	Long Test Sequence	D/ND*
NPE Crosstalk Test (#6)		X	ND
Dial Tone Test (#0)		X	ND
CO Demand Diagnostic Test (#3) (a)	X	X	ND
Loop Around and Conference Test (#33)		X	ND
Audit Update Test (#36)	X	X	ND
Transmission Test - ATMS (#844-848)	(b)	(b)	ND

* D = Destructive; ND = Nondestructive

a. A demand test of Diagnostic Test (#3) will always return a PASS indication for CO-TRK/CO-BD [TN747B] version 8 or greater. However, any errors produced as a result of this test will be logged and produce no alarms.

   If errors logged by test #3 are the only complaints against this trunk, then the system technician should check if MFT/Range Extenders are being used. If extenders are present, then there is a good chance that there is excessive loop current, which will cause Test #3 to log errors.

   However, all else being normal, these errors should not affect the customer.

b. The ATMS tests are not part of either test sequence. They are run either on demand with **test analog-testcall** or by the ATMS schedule.

Dial Tone Test (#0)

This test attempts to seize a port and checks for the return of a dial tone.

Table 9-75. TEST #0 Dial Tone Test

Error Code	Test Result	Description/ Recommendation
	ABORT	Could not allocate system resources to run this test. 1. Retry the command at 1-minute intervals a maximum of 5 times. 2. If the test continues to abort, escalate the problem.
1000	ABORT	System resources required to run this test are not available. The port may be busy with a valid call. Use the command **display port UUCSSpp** to determine the trunk group/member number of the port. Use the **status trunk** command to determine the service state of the port. If the service state indicates that the port is in use, then the port is unavailable for certain tests. You must wait until the port is idle before retesting. 1. If the port status is idle, then retry the command at 1-minute intervals a maximum of 5 times. 2. If the test continues to abort, escalate the problem.
1001	ABORT	Could not allocate the necessary system resources to run this test. 1. Retry the command at 1-minute intervals a maximum of 5 times. 2. If the test continues to abort, escalate the problem.
1002	ABORT	The system could not allocate time slots for the test. The system may be under heavy traffic conditions or it may have time slots out-of-service due to TDM-BUS errors. Refer to TDM-BUS (TDM Bus) Maintenance documentation to diagnose any active TDM-BUS errors. 1. If the system has no TDM-BUS errors and is not handling heavy traffic, repeat test at 1-minute intervals a maximum of 5 times. 2. If the test continues to abort, escalate the problem.

Continued on next page

Table 9-75. TEST #0 Dial Tone Test — *Continued*

Error Code	Test Result	Description/ Recommendation
1004	ABORT	The port has been seized by a user for a valid call. Use the **status trunk** command to determine when the port is available for testing. 1. Retry the command at 1-minute intervals a maximum of 5 times. 2. If the test continues to abort and the port is not in use, escalate the problem.
1005	ABORT	Trunk has been administered as incoming-only; dial tone can only be obtained on outgoing trunks. This is a normal condition.
1018	ABORT	Test has been disabled via administration. 1. Verify that the ‘‘Maintenance Tests?’’ field on the Trunk Group Form is set to ‘‘n.’’ To enable the test, issue the **change trunk-group x** command where ‘‘x’’ equals the number of the trunk group to be tested. Then change the entry in the ‘‘Maintenance Tests?’’ field on the form to ‘‘y.’’
2000	ABORT	Response to the test was not received within the allowable time period. 1. Retry the command at 1-minute intervals a maximum of 5 times. 2. If the test continues to abort, escalate the problem.

Continued on next page

Table 9-75. TEST #0 Dial Tone Test — *Continued*

Error Code	Test Result	Description/ Recommendation
	FAIL	Trunk was seized, but dial tone could not be detected. 1. Check for errors on TONE-BD or TONE-PT. Clear any errors found and repeat test. **NOTE:** If error has still not cleared, refer problem to CO. See the preceding procedure for a failure with Error Code 7. If the Dial Tone Test fails for all ports on a circuit pack, a -5 volt power problem is indicated. If a TN736 or TN752 power unit circuit pack is present, either the 631DB AC power unit or the 676B DC power unit may be defective. (The 631DB power unit is used in a medium cabinet powered by an AC source. The 645B power unit is used in a medium cabinet powered by a DC power source.) The system may contain a TN736 or TN752 power unit circuit pack OR a 631DB AC power unit, BUT NOT BOTH TYPES OF POWER UNITS. To investigate problems with a 631DB AC power unit, refer to CARR-POW (Carrier Port Power Unit for AC-Powered Systems) Maintenance documentation. To investigate problems with a 645B DC power unit, refer to CARR-POW (Carrier Port Power Unit for DC-Powered Systems) Maintenance documentation.

Continued on next page

Table 9-75. TEST #0 Dial Tone Test — *Continued*

Error Code	Test Result	Description/ Recommendation
2002	FAIL	Seizure portion of test failed due to hardware problem. Fault is usually caused by a disconnected trunk. 1. If the CO Demand Diagnostic Test (#3) also failed, display the Hardware Error Log. If the CO Demand Diagnostic Test failed because it could not detect ground (indicated by Error Type 1281 in the Hardware Error Log) AND Error Type 3329 or 3585 appears in the Hardware Error Log (with the same last occurred time as Error Type 1281 and 1537), replace the circuit pack. 2. Check trunk wiring to ensure good connection; repeat test if wiring correction made. 3. Locate another identical CO trunk and swap its wiring with one under test. Repeat test on both trunks and determine if problem follows trunk or remains at original port. If problem follows trunk, refer problem to CO. If problem remains at port, replace circuit pack and repeat test. 4. If replacing circuit pack does not clear failure, escalate the problem.
1009	PASS	Detected tone was not pure dial tone. No action required.
	PASS	Trunk was seized, and dial tone was detected. User-reported troubles on this port should be investigated by using other port tests and by examining trunk or external wiring.

CO Demand Diagnostic Test (#3)

For ground start trunks, port circuit pack relays are operated and checks are made to see if the port can detect and apply ground on the Tip lead. This test also verifies that there is no external ground on the Ring lead. In the absence of other failures, the circuit pack should be replaced only if this test fails with the CO line disconnected.

For the TN2147, this test also checks the on-board programmable transmission circuits that allow the circuit pack to support transmission characteristics of several different countries.

Table 9-76. TEST #3 CO Demand Diagnostic Test

Error Code	Test Result	Description/ Recommendation
	ABORT	Could not allocate system resources to run this test. 1. Retry the command at 1-minute intervals a maximum of 5 times. 2. If the test continues to abort, escalate the problem.
1000	ABORT	System resources required to run this test are not available. The port may be busy with a valid call. Use the **display port UUCSSpp** command to determine the trunk group/member number of the port. Use the **status trunk** command to determine the service state of the port. If the service state indicates that the port is in use, then the port is unavailable for certain tests. You must wait until the port is idle before retesting. 1. If the port status is idle, then retry the command at 1-minute intervals a maximum of 5 times. 2. If the test continues to abort, escalate the problem.
1004	ABORT	The port has been seized by a user for a valid call. Use the **status trunk** command to determine when the port is available for testing. 1. Retry the command at 1-minute intervals a maximum of 5 times. 2. If the test continues to abort and the port is not in use, escalate the problem.
1005	ABORT	Test inapplicable to present configuration. This is a normal condition.

Continued on next page

Table 9-76. TEST #3 CO Demand Diagnostic Test — *Continued*

Error Code	Test Result	Description/ Recommendation
1018	ABORT	Test has been disabled via administration. 1. For this test to run, the `Maintenance Tests?` field on the trunk group form must be set to n. The form is accessed with the change trunk-group grp# command.
2000	ABORT	Response to the request was not received within the allowable time period. 1. Retry the command at 1-minute intervals a maximum of 5 times. 2. If the test continues to abort, escalate the problem.

Continued on next page

Table 9-76. TEST #3 CO Demand Diagnostic Test — *Continued*

Error Code	Test Result	Description/ Recommendation
	FAIL	Failure to detect ground or faulty ground detected on Ring lead. Display the hardware errors for this trunk, to determine if the fault was on- or-off board. Look for Error Type 1025 or 1281 (if both appear in the Hardware Error Log, pick the most recent error). Error Type 1025 indicates a faulty ground detected on Ring lead (an off-board fault) and Error Type 1281 indicates failure to detect (internally generated) ground (an on-board fault). Faulty ground detected on Ring lead (Error Type 1025): **NOTE:** On TN747B vintage 8 and greater circuit packs, an incoming seizure during this test may cause it to fail with an off-board fault. 1. Repeat test. If test passes, ignore the original failure. If test aborts, follow the recommended procedures. 2. Repeat test with CO line removed. 3. If test fails, replace the circuit pack. 4. If test passes, refer problem to CO. Failure to detect ground (Error Type 1281): 1. Run the long test sequence. If the CO Demand Diagnostic Test fails, the Dial Tone Test (#0) fails with Error Code 2002, AND Error Type 3329 or 3585 appears in the Hardware Error Log (with the same last occurred time as Error Type 1281 and 1537), replace the circuit pack. 2. Repeat test with CO line removed. 3. If test fails, replace the circuit pack. 4. If test passes, the CO may be drawing too much current. Refer problem to CO.

Continued on next page

Table 9-76. TEST #3 CO Demand Diagnostic Test — *Continued*

Error Code	Test Result	Description/ Recommendation
	PASS	This test verifies that the port is able to apply ground for outgoing calls and detect ground for incoming calls; however, it does not provide information on whether a CO line is actually connected. User-reported troubles on this port should be investigated by using other port tests and by examining trunk or external wiring.

NPE Crosstalk Test (#6)

One or more Network Processing Elements (NPEs) reside on each circuit pack with a TDM Bus interface. The NPE controls port connectivity and gain, and provides conferencing functions on a per port basis. The NPE Crosstalk Test verifies that this port's NPE channel talks on the selected time slot and never crosses over to time slots reserved for other connections. If the NPE is not working correctly, one way and noisy connections may be observed. This test is usually only part of a port's long test sequence and takes approximately 20 to 30 seconds to complete.

Table 9-77. TEST #6 NPE Crosstalk Test

Error Code	Test Result	Description/ Recommendation
	ABORT	Could not allocate the necessary system resources to run this test. 1. Retry the command at 1-minute intervals a maximum of 5 times. 2. If the test continues to abort, escalate the problem.
1000	ABORT	System resources required to run this test are not available. The port may be busy with a valid call. Use the **display port UUCSSpp** command to determine the trunk group/member number of the port. Use the **status trunk** command to determine the service state of the port. If the service state indicates that the port is in use, then the port is unavailable for certain tests. You must wait until the port is idle before retesting. 1. If the port status is idle, then retry the command at 1-minute intervals a maximum of 5 times. 2. If the test continues to abort, escalate the problem.
1001	ABORT	Could not allocate the necessary system resources to run this test. 1. Retry the command at 1-minute intervals a maximum of 5 times. 2. If the test continues to abort, escalate the problem.
1002	ABORT	The system could not allocate time slots for the test. The system may be under heavy traffic conditions or it may have time slots out-of-service due to TDM-BUS errors. Refer to TDM-BUS (TDM-Bus) Maintenance documentation to diagnose any active TDM-BUS errors. 1. If system has no TDM-BUS errors and is not handling heavy traffic, repeat test at 1-minute intervals a maximum of 5 times. 2. If the test continues to abort, escalate the problem.

Continued on next page

Table 9-77. TEST #6 NPE Crosstalk Test — *Continued*

Error Code	Test Result	Description/ Recommendation
1003	ABORT	The system could not allocate a tone receiver for the test. The system may be oversized for the number of tone detectors present or some tone detectors may be out-of-service. 1. Look for TTR-LEV errors in the Error Log. If present, refer to TTR-LEV Maintenance documentation. 2. Look for TONE-PT errors in the Error Log. If present, refer to TONE-PT Maintenance documentation. 3. If neither condition exists, retry the test at 1-minute intervals a maximum of 5 times. 4. If the test continues to abort, escalate the problem.
1004	ABORT	The port was seized by a valid call during the test. The test has been aborted. Use the **display port UUCSSpp** command to determine the trunk group/member number of the port. Use the **status trunk** command to determine the service state of the port. If the service state indicates that the port is in use, then the port is unavailable for certain tests. You must wait until the port is idle before retesting.
2000	ABORT	Response to the test request was not received within the allowable time period.
2100	ABORT	Could not allocate the necessary system resources to run this test. 1. Retry the command at 1-minute intervals a maximum of 5 times. 2. If the test continues to abort, escalate the problem.
Any	FAIL	The NPE of the tested port was found to be transmitting in error. This will cause noisy and unreliable connections. 1. Replace the circuit pack.
	PASS	The port is correctly using its allocated time slots. User-reported troubles on this port should be investigated by using other port tests and by examining trunk or external wiring.

Loop Around and Conference Circuit Test (#33)

This test checks the reflective loop around and conference capabilities of a CO port circuit. The test uses 404-Hz, 1004-Hz, and 2804-Hz tones. Each tone is transmitted separately through the loop and checked.

Table 9-78. TEST #33 Loop Around and Conference Circuit Test

Error Code	Test Result	Description/ Recommendation
	ABORT	Could not allocate the necessary system resources to run this test.
7	ABORT	Conference Circuit Test aborted.
129 131 133	ABORT	Response to the test request was not received within the allowable time period. 1. Retry the command at 1-minute intervals a maximum of 5 times. 2. If test continues to abort, escalate the problem.
1000	ABORT	System resources required to run this test are not available. The port may be busy with a valid call. Use the **display port UUCSSpp** command to determine the trunk group/member number of the port. Use the **status trunk** command to determine the service state of the port. If the service state indicates that the port is in use, then the port is unavailable for certain tests. You must wait until the port is idle before retesting. 1. If the port status is idle, then retry the command at 1-minute intervals a maximum of 5 times. 2. If the test continues to abort, escalate the problem.
1002	ABORT	The system could not allocate time slots for the test. The system may be under heavy traffic conditions or it may have time slots out-of-service due to TDM-BUS errors. Refer to TDM-BUS Maintenance to diagnose any active TDM-BUS errors. 1. If system has no TDM-BUS errors and is not handling heavy traffic, repeat test at 1-minute intervals a maximum of 5 times. 2. If the test continues to abort, escalate the problem.

Continued on next page

Table 9-78. TEST #33 Loop Around and Conference Circuit Test — *Continued*

Error Code	Test Result	Description/ Recommendation
1003	ABORT	The system could not allocate a tone receiver for the test. The system may be oversized force. 1. Look for TTR-LEV errors in the Error Log. If present, refer to TTR-LEV Maintenance documentation. 2. Look for TONE-PT errors in the Error Log. If present, refer to TONE-PT Maintenance documentation. 3. If neither condition exists, retry the command at 1-minute intervals a maximum of 5 times. 4. If the test continues to abort, escalate the problem.
1004	ABORT	The port has been seized by a user for a valid call. Use the **status trunk** command to determine when the port is available for testing. 1. Retry the command at 1-minute intervals a maximum of 5 times. 2. If the test continues to abort and the port is not in use, escalate the problem.
2100	ABORT	Could not allocate the necessary system resources to run this test. 1. Retry the command at 1-minute intervals a maximum of 5 times. 2. If the test continues to abort, escalate the problem.

Continued on next page

Table 9-78. TEST #33 Loop Around and Conference Circuit Test — *Continued*

Error Code	Test Result	Description/ Recommendation
7, 129, 131, or 133	FAIL	The conference capabilities of the port failed (Error Code 7). The reflective 404-Hz Tone Test failed. No transmission was detected to or from the port (Error Code 129). The reflective 1004-Hz Tone Test failed. No transmission was detected to or from the port (Error Code 131). The reflective 2804-Hz Tone Test failed. No transmission was detected to or from the port (Error Code 133). 1. Check for errors on TONE-BD or TONE-PT. If errors, take appropriate actions. 2. If the Reflective Loop Around Test fails for all ports on a circuit pack, a -5 volt power problem is indicated. If a TN736 or TN752 power unit circuit pack is present, check the circuit pack for a red LED. If the red LED is on, then replace the appropriate power unit circuit pack. If neither the TN736 nor the TN752 power unit circuit pack is present then the 631DB AC power unit may be defective. The system may contain a TN736 or TN752 power unit circuit pack OR a 631DB AC power unit, BUT NOT BOTH TYPES OF POWER UNITS. **NOTE:** To investigate problems with a 631DB AC power source, refer to CARR-POW Maintenance documentation (for AC-Powered systems). 3. Rerun the test. 4. If the test fails again, replace the circuit pack.
	PASS	CO Trunk Loop Around and Conference Test is successful. User-reported troubles on this port should be investigated by using other port tests and by examining trunk or external wiring.

Port Audit Update Test (#36)

This test will send updates of the CO port translation for all ports on the circuit pack which have been translated. The update is non-disruptive and guards against possible corruption of translation data contained on the circuit pack. No response message is expected from the circuit pack once it receives translation updates. The port translation data includes: ground or loop start trunk, tone or rotary dialing trunk, rotary dialing inter-digit timing, network balance R/RC, and disconnect timing.

Table 9-79. TEST #36 Port Audit Update Test

Error Code	Test Result	Description/ Recommendation
	ABORT	Could not allocate the necessary system resources to run this test. 1. Retry the command at 1-minute intervals a maximum of 5 times. 2. If the test continues to abort, escalate the problem.
2100	ABORT	Could not allocate the necessary system resources to run the test.
	FAIL	Internal system error 1. Retry the command at 1-minute intervals a maximum of 5 times. 2. If test continues to fail, escalate the problem.
	PASS	This test passed. Translation information was successfully updated on the circuit pack. User-reported troubles on this port should be investigated by using other port tests and by examining trunk or external wiring. If the trunk is busied out, the test will not run, but will return PASS. To verify that the trunk is in-service: 1. Enter **status trunk** to verify that the trunk is in-service. If the trunk is in-service, no further action is necessary. If the trunk is out-of-service, continue to Step 2. 2. Enter **release trunk** command to put trunk back into in-service. 3. Retry the test command.

Transmission test (#844-848)

This test is not destructive.

These tests are run by the Automatic Transmission Measurement System (ATMS). They are not part of the long or short trunk test sequences. Instead, they are run on demand with the **test analog-testcall** command or as part of ATMS scheduled testing. For more information, see "Automatic Transmission Measurement System (ATMS)" in Chapter 6, "Additional Maintenance Procedures".

The test call is run from an analog port on a TN711 Maintenance/Test circuit pack. It attempts to seize a port and make a call to a terminating test line (TTL) on the trunk's far end. Transmission performance measurements are made and compared to administered thresholds. Errors are generated when results fall outside of ''marginal'' or ''unacceptable'' thresholds. Detail and summary measurement reports are obtainable via the **list testcalls** command.

Table 9-80. TEST #844-848 Transmission Test

Error Code	Test Result	Description/ Recommendation
1000	ABORT	System resources required to run this test are not available. The port may be busy with a valid call. Use the command **display port UUCSSpp** to determine the trunk group/member number of the port. Use the "status trunk" command to determine the service state of the port. If the service state indicates that the port is in use, then the port unavailable for this test. (Refer to section on "status" commands for a full description all possible states). You must wait until the port is idle before retesting. 1. If the port status is idle, then retry the command at 1 minute intervals for a maximum of 5 retries. 2. If the test continues to abort escalate the problem.
1001	ABORT	Could not allocate the necessary system resources to run this test. 1. Retry the command at 1 minute intervals for a maximum of 5 retries. 2. If the test continues to abort escalate the problem.

Continued on next page

Table 9-80. TEST #844-848 Transmission Test — *Continued*

Error Code	Test Result	Description/ Recommendation
1002	ABORT	The system could not allocate timeslots for the test. The system may be under heavy traffic conditions or it may have timeslots out of service due to TDM bus errors. Refer to TDM Bus Maintenance to diagnose any active TDM bus errors. 1. If system has no TDM bus errors and is not handling heavy traffic, repeat test at 1 minute intervals for a maximum of 5 retries. 2. If the test continues to abort escalate the problem.
1004	ABORT	The port has been seized by a user for a valid call. Use status trunk to determine when the port is available for testing. 1. Retry the command at 1 minute intervals for a maximum of 5 retries. 2. If the test continues to abort and the port is not in use, escalate the problem.
1005	ABORT	Trunk has been administered as incoming-only; transmission tests can only be run on outgoing trunks.
1115	ABORT	The near end test line on the TN771B board could not be allocated. 1. Verify that the TN771B board is in service and that port 1 of the board is administered and in service with the "status port" command. 2. Retry the command at 1 minute intervals for a maximum of 5 retries. 3. If the test continues to abort escalate the problem.
2000	ABORT	The test timed out while waiting for a response from the TN771B board 1. Retry the command at 1 minute intervals for a maximum of 5 retries. 2. If the test continues to abort escalate the problem.

Continued on next page

Table 9-80. TEST #844-848 Transmission Test — *Continued*

Error Code	Test Result	Description/ Recommendation
2012	ABORT	An internal software error occurred 1. Retry the command at 1 minute intervals for a maximum of 5 retries. 2. If the test continues to abort escalate the problem.
2053	ABORT	The test call could not be established, but no information on why is available. 1. Retry the command at 1 minute intervals for a maximum of 5 retries. 2. If the test continues to abort escalate the problem.
2056	ABORT	An error occurred while trying to obtain results from the TN771B board 1. Test the TN711 circuit packs. 2. If the test continues to abort escalate the problem.
1900	ABORT	The test completion message was not received from the TN771B board 1. Test the TN711 circuit packs. 2. If the test continues to abort escalate the problem.
1905	ABORT	Intercept tone detected from far end 1. Get the test line data from the "display trunk" screen and verify it with the far end. Dial the test number manually to see if the TTL is reached. If it is not, then either the number is wrong, or the far end is administered incorrectly. 2. If the test continues to abort escalate the problem.
1906	ABORT	Reorder tone detected from far end 1. See actions for error code 1905.
1907	ABORT	Other unexpected tone detected from far end 1. See actions for error code 1905.
1913	ABORT	Audible Ring detected from far end 1. See actions for error code 1905.

Continued on next page

Table 9-80. TEST #844-848 Transmission Test — *Continued*

Error Code	Test Result	Description/ Recommendation
1914	ABORT	Unidentified interrupted tone detected from far end 1. See actions for error code 1905.
1915	ABORT	Busy tone detected from far end 1. Since the test line at the far end was busy. The test should be retried. 2. if the test continues to abort, the problem is with the far end system.
1918	ABORT	Test progress tone not removed from far end (type 105 test line only) 1. The problem is with the far end system; The craft at the far end should test the test line (TN771B or ADFTC).
1919	ABORT	unexpected far end release 1. problem is with the far end system; The craft at the far end should test the test line (TN771B or ADFTC).
1920	ABORT	No response from far end 1. The problem is with the far end system; The craft at the far end should test the test line (TN771B or ADFTC).
1921	ABORT	No data returned from far end 1. The problem is with the far end system; The craft at the far end should test the test line (TN771B or ADFTC).
1922	ABORT	Steady, unidentifiable tone from far end 1. See actions for error code 1905.
1923	ABORT	Broadband energy detected from far end (such as voice or announcement) 1. See actions for error code 1905.
1924	ABORT	No test tone from far end 1. See actions for error code 1905.

Continued on next page

Table 9-80. TEST #844-848 Transmission Test — *Continued*

Error Code	Test Result	Description/ Recommendation
1938	ABORT	Near-end self test failed 1. Test the TN711 circuit packs. 2. If the test continues to abort escalate the problem.
1939	ABORT	Loss self-check at 0dBm at 1004 Hz failed 1. Test the TN711 circuit packs. 2. If the test continues to abort escalate the problem.
1940	ABORT	Far end noise self check failed 1. The problem is with the far end system; The craft at the far end should test the test line (TN771B or ADFTC).
1941	ABORT	High frequency singing return loss self check failed 1. Test the TN711 circuit packs. 2. If the test continues to abort escalate the problem.
1942	ABORT	Echo return loss self check failed 1. Test the TN711 circuit packs. 2. If the test continues to abort escalate the problem.
1943	ABORT	Singing return loss self check failed 1. Test the TN711 circuit packs. 2. If the test continues to abort escalate the problem.
1944	ABORT	Loss self check at -16 dBm at 1004 Hz failed 1. Test the TN711 circuit packs. 2. If the test continues to abort escalate the problem.
1945	ABORT	Loss self check at -16 dBm at 404 Hz failed 1. Test the TN711 circuit packs. 2. If the test continues to abort escalate the problem.
1946	ABORT	Loss self check at -16 dBm at 2804 Hz failed 1. Test the TN711 circuit packs. 2. If the test continues to abort escalate the problem.

Continued on next page

Table 9-80. TEST #844-848 Transmission Test — *Continued*

Error Code	Test Result	Description/ Recommendation
1947	ABORT	Noise with tone self check failed 1. Test the TN711 circuit packs. 2. If the test continues to abort escalate the problem.
	FAIL	Measured transmission performance was in the unacceptable range as administered on the trunk group form. Retrieve a measurement report via the **list testcalls** command. Make sure that ATMS thresholds are set properly on page 4 of the trunk group form. Besides the facility, test failures can be caused by faulty test lines or switch paths. If the measurements point to a facility problem, report the results to the trunk vendor.
8000	FAIL	Measured transmission performance was in the marginal range as administered on the trunk group form. This generally means that the trunk is usable but has an undesirable amount of noise or loss. If the user does not report unacceptable effects, it may not be necessary to take any action. Retrieve a measurement report via the **list testcalls** command. Make sure that ATMS thresholds are set properly on page 4 of the trunk group form.

CONFIG (System Configuration)

MO Name As It Appears In Alarm Log	Alarm Level	Initial System Technician Command To Run	Full Name of MO
CONFIG	none	none	System Configuration

The System Configuration maintenance object (MO) oversees logical insertion and removal of circuit packs in the system. When Switch Control detects that a circuit pack is present in a port slot, it informs System Configuration and System Configuration queries the circuit pack to determine the type and vintage of the circuit pack. Similarly, when Switch Control detects that a circuit pack has been removed from a port slot, it informs System Configuration.

There are no alarms or tests for System Configuration, but two types of errors are logged to the Hardware Error Log (see below).

Hardware Error Log Entries and Test to Clear Values

System Configuration Error Log Entries					
Error Type	**Aux Data**	**Associated Test**	**Alarm Level**	**On/Off Board**	**Test to Clear Value**
0*	0	none	none	N/A	none
1-119 (a)	0-21	none			
1001-1119 (b)	0-21	none			

* This error should not occur. It indicates that an attempt was made by software to raise an alarm against CONFIG without first logging a CONFIG error.

Notes:

a. This error indicates that a port circuit pack in the system did not respond to a circuit pack type inquiry. Follow the procedures outlined in (b) to determine if there is an error.

b. This error indicates that a port circuit pack in the system did not respond to a vintage inquiry.

As a result of either of these errors, a port circuit pack may be physically inserted in a port slot, but the system may not recognize its existence. The Aux Data field specifies the circuit pack's port-network number as indicated in the following table.

Converting Aux Data to Port-Network Number

Aux Data	Port-Network Number
0	1
1	2
2	3
3	4
4	5
5	6
6	7
7	8
8	9
9	10
10	11
11	12
12	13
13	14
14	15
15	16
16	17
17	18
18	19
19	20
20	21
21	22

The Error Type field specifies the carrier and slot location of the circuit pack that caused the error as indicated in Table 9-81. If the Error Type field is greater than 1000, subtract 1000 from the Error Type field before consulting the table.

If more than one CONFIG error is logged with an Aux Data of 1 at the same time, investigate any EXP-INTF (Expansion Interface) errors before proceeding. Once the port circuit pack location has been determined from Table 9-81, use the **list configuration all** command to determine if the circuit pack is inserted. If not, insert the pack. If the circuit pack has already been inserted but the error persists, replace the circuit pack

Table 9-81. Converting Error Types To Carrier Locations

Error Type	Carrier Location
1	a)
2	E01
3	E02
4	E03
5	E04
6	E05
7	E06
8	E07
9	E08
10	E09
11	E10
12	E11
13	E12
14	E13
15	E14
16	E15
17	E16
18	E17
19	E18
20	E19
21	E20
22	E00 (d)
23	a)
24	a)
25	(a)
26	(a)
27	A00 (e)
28	A01 (b)

Continued on next page

Table 9-81. Converting Error Types To Carrier Locations — *Continued*

Error Type	Carrier Location
29	A02
30	A03
31	A04
32	(a)
33	(a)
34	D01
35	D02
36	D03
37	D04
38	D05
39	D06
40	D07
41	D08
42	D09
43	D10
44	D11
45	D12
46	D13
47	D14
48	D15
49	D16
50	D17
51	D18
52	D19
53	D20
54	D00 (d)
55	(a)
56	A05

Continued on next page

Table 9-81. Converting Error Types To Carrier Locations — *Continued*

Error Type	Carrier Location
57	A06
58	A07
59	A08
60	A09
61	A10 (c)
62	A11
63	A12
64	(a)
65	(a)
66	B01
67	B02
68	B03
69	B04
70	B05
71	B06
72	B07
73	B08
74	B09
75	B10
76	B11
77	B12
78	B13
79	B14
80	B15
81	B16
82	B17
83	B18
84	B19

Continued on next page

Table 9-81. Converting Error Types To Carrier Locations — *Continued*

Error Type	Carrier Location
85	B20
86	B00 (d)
87	(a)
88	A13
89	A14
90	A15
91	A16
92	A17
93	A18
94	A19
95	A20
96	(a)
97	(a)
98	C01
99	C02
100	C03
101	C04
102	C05
103	C06
104	C07
105	C08
106	C09
107	C10
108	C11
109	C12
110	C13
111	C14
112	C15

Continued on next page

Table 9-81. Converting Error Types To Carrier Locations — *Continued*

Error Type	Carrier Location
113	C16
114	C17
115	C18
116	C19
117	C20
118	C00 (d)
119	(a)

Notes to Error Type Conversion Table:

a. These error types do not represent physical port circuit pack slots and are not logged against CONFIG.

b. If this error type occurs in the PPN, it refers to the A-Carrier Tone Generator circuit pack. If it occurs in any EPN, it refers to the circuit pack in slot A01.

c. If this error type occurs in the PPN, it refers to the B-Carrier Tone Generator circuit pack. If it occurs in any EPN, it refers to the circuit pack in slot A10.

d. Slots B00, C00, D00, and E00 refer to the *Service Slots* in the B, C, D, And E carriers.

e. In EPN A-Carriers, slot A00 is the Tone Generator slot.

CUST-ALM (Customer-Provided Alarming Device)

MO Name As It Appears In Alarm Log	Alarm Level	Initial System Technician Command To Run (a)	Full Name of MO
CUST-ALM	none	test customer-alarm UUC	Customer-Provided Alarming Device

a. where UUC is an appropriate cabinet number and carrier (duplicated SPE system only, that is, can be 1a or 1b).

The system provides customers a way to connect their own alarm indication device to a switch. The CUST-ALM maintenance object represents this customer-provided alarming device (CPAD).

The customer administers the level of alarm for which the CPAD will be activated via the **change system-parameter maintenance** form (CPE Alarm Activation Level field). The customer sets this field to: **none, warning, minor,** or

or **major** depending on the level of alarm at which the CPAD should be activated. When an alarm occurs of at least the level to which the CPAD is administered, the CPAD in the PPN and the EPN will be activated. The CPAD will also be activated within a cabinet whenever Emergency Transfer is invoked within that cabinet.

depending on the level of alarm at which the CPAD should be activated. When an alarm occurs of at least the level to which the CPAD is administered, the CPAD in the PPN and the EPN will be activated. The CPAD will also be activated within a cabinet whenever Emergency Transfer is invoked within that cabinet.

The CPAD is connected to the SYSAM in the PPN (in a duplicated SPE system, the CPAD is connected to both SYSAMs), and to the EPN Maintenance circuit pack in the EPN. The CUST-ALM maintenance object is not maintained by the system, and will not generate any alarms. If a problem is suspected with the CPAD, it may be tested using the **test customer-alarm** command, which will activate the device by closing the relay on either the SYSAM or the EPN Maintenance circuit pack (whichever is specified) for 1 minute. In a duplicated SPE system the CPAD on the PPN is connected to the SYSAM on both carrier A and carrier B, and the **test customer-alarm** command will close the relay on the active SYSAM. The repeat parameter may be used to close the relay for a longer length of time where the number of the repeat is the number of minutes for which the device will be activated (5 minutes is the suggested repeat value).

System Technician-Demanded Tests: Descriptions and Error Codes

The **test customer-alarm UUC** command is provided to allow a technician to check that the customer-provided alarming device is correctly installed and functional. It is recommended that this test be run at least once after both the switch and the customer alarm have been installed.

Customer-Provided Alarming Device Test (#115)

The Customer-Provided Alarming Device (CPAD) Test closes the relay that activates the CPAD for 1 minute only within the port network specified. If it takes longer than 1 minute to check that the CPAD has been activated, the Repeat field on the **test customer-alarm UUC** command can be used to close the relay for up to 99 minutes. Note that when the repeat option is used, the results for Test #115 come back immediately and, for each test that passed, the CPAD is kept on for that many minutes. The CPAD does not go off after 1 minute and then come back on. Instead, the CPAD is kept on continuously for the entire time. If the CPAD is being activated and deactivated in a flickering fashion, there is a problem with either the CPAD, or the SYSAM, or the EPN Maintenance circuit pack.

Table 9-82. TEST #115 Customer-Provided Alarming Device Test

Error Code	Test Result	Description/ Recommendation
Any	ABORT	Internal System Error 1. Retry the command at 1 minute intervals a maximum of 5 times. 2. If the test continues to abort, escalate the problem.

Continued on next page

Table 9-82. TEST #115 Customer-Provided Alarming Device Test — *Continued*

Error Code	Test Result	Description/ Recommendation
	PASS	The switch software successfully sent the request to the SYSAM or EPN Maintenance circuit pack to turn on the CPAD. The CPAD must be physically inspected to verify that it is working. If the CPAD is working but the customer has complained that the CPAD did not indicate a system alarm when it occurred, then check the administered alarm level for turning on the CPAD. This is on the **display system-parameter maintenance** form. Compare this level with the customer's specifications. If the level does not match the customer's specifications, change it using the **change system-parameter maintenance** form. If Test #115 passes, and the CPAD is not being activated, check the connection of the CPAD to the SYSAM or EPN Maintenance circuit pack. If the CPAD can be activated but cannot be deactivated, first check to make sure Emergency Transfer is not activated in the affected port network via the **status port-network** command. Emergency Transfer can be forced to manual OFF via the Emergency Transfer switch on the SYSAM or EPN Maintenance circuit pack. If Emergency Transfer is OFF and the CPAD still cannot be deactivated, check the administered levels for the CPAD via the **display system-parameter maintenance** form and compare against the alarm levels currently present in the system (**display alarms** command).

Maintenance Object Repair Procedures
DAT-LINE to DUPINT

D

DAT-LINE (Data Line Port)

MO Name As It Appears in Alarm Log	Alarm Level	Initial System Technician Command to Run (a)	Full Name of MO
DAT-LINE	MINOR	test port UUCSSpp l	Data Line Port
DAT-LINE	WARNING	test port UUCSSpp l	Data Line Port

a. UU is the universal cabinet number (1 for PPN, 2 -22 for EPNs). C is the carrier designation (A, B, C, D, or E). SS is the number of the slot in which the circuit pack resides (01 to 21). pp is the two digit port number (01, 02, ...).

The TN726 Data Line circuit pack has 8 ports, each of which supports an RS232 interface to asynchronous Customer Premises Equipment (CPE). Each of these ports and the equipment connected to it constitute a data line. For DT-LN-BD (Data Line Circuit Pack) errors, refer to the XXX-BD (Common Port Circuit Pack) maintenance documentation. Circuit pack-level errors should be looked at first since the usability of the ports depend on the health of the circuit pack.

Data Line ports are administered at the G3-MT terminal with the **add data-module** command. The data module type is *data-line*. The **list data-module** command will list all administered data modules in the system. See the PDATA-PT section for details on how Data Lines are used as System Ports.

The TN750 Announcement circuit pack also has one Data Line-type port on it. This Data Line port is used for saving and restoring announcements. For a

description of this feature and repair instructions for the TN750, refer to ANN-BD (Announcement Circuit Pack) maintenance documentation.

NOTE:
If the tests for the Data Line port in question pass, and user-reported complaints persist, there is probably an external problem. Test the asynchronous data unit (ADU), following the procedures outlined in *User Manual Z3A Asynchronous Data Unit*, 555-401-701. If the ADU appears to be working properly, next check the external wiring, and then check the customer equipment.

Hardware Error Log Entries and Test to Clear Values

Data Line Port Error Log Entries					
Error Type	**Aux Data**	**Associated Test**	**Alarm Level**	**On/Off Board**	**Test to Clear Value**
0*	0	Any	Any	Any	test port UUCSSpp sh r 1
1		Digital Loop Around Test (#171)	MINOR	ON	test port UUCSSpp s r 2
15(a)	Any	Audit Update Test (#36)			
18	0	Busyout port UUCSSpp	WARNING	OFF	rel port UUCSSpp
130 (b)		None	WARNING	ON	test port UUCSSpp sh
257		Conference Circuit Test (#7)	MINOR	ON	test port UUCSSpp l r 2
513		NPE Crosstalk Test (#6)	MINOR	ON	test port UUCSSpp l r 2
769(c)	40983	None			

* Run the Short Test Sequence first. If all tests pass, run the Long Test Sequence. Refer to the appropriate test description and follow the recommended procedures.

Notes:

a. This is a software audit error that does not indicate any hardware malfunction. Run the Short Test Sequence and investigate errors, if any.

b. This error type indicates that the circuit pack has been removed or has been insane for more than 11 minutes. To clear the error, reinsert or replace the circuit pack.

c. Error type 769 indicates that the Data Line circuit pack found an error in the transmit/receive circuitry of an administered Data Line when the circuit pack was inserted. Perform the following procedure:

1. Enter **busyout board** UUCSS for the circuit pack on which the port resides.

2. Enter **reset board** UUCSS. Check the Error Log to determine if Error Type 769 is logged again for DAT-LINE. Make sure that `Active Alarms Only` field is set to n.

   If error type 769 reappears, replace the Data Line circuit pack. If Error Type 769 does not reappear, proceed to Step 3.

3. Enter **release board** UUCSS.

System Technician-Demanded Tests: Descriptions and Error Codes

Always investigate tests in the order presented in the table below when inspecting errors in the system. By clearing error codes associated with the *Digital Loop Around Test,* for example, you may also clear errors generated from other tests in the testing sequence.

for example, you may also clear errors generated from other tests in the testing sequence.

Order of Investigation	ShortTest Sequence	LongTest Sequence	D/ND*
Digital Loop Around Test (#171)	X	X	ND
NPE Crosstalk Test (#6)		X	ND
Conference Circuit Test (#7)		X	ND
Audit Update Test (#36)	X	X	ND

* D = Destructive; ND = Nondestructive

NPE Crosstalk Test (#6)

One or more NPEs reside on each circuit pack with a TDM Bus interface. The NPE controls port connectivity and gain, and provides conferencing functions on a per-port basis. The NPE Crosstalk Test verifies that this port's NPE channel talks on the selected time slot and never crosses over to time slots reserved for other connections. If the NPE is not working correctly, one-way and noisy connections may be observed. This test is usually part of a port's long test sequence and takes about 20 to 30 seconds to complete.

Table 9-83. TEST #6 NPE Crosstalk Test

Error Code	Test Result	Description/ Recommendation
	ABORT	Could not allocate the necessary system resources to run this test. 1. Retry the command at 1-minute intervals a maximum of 5 times. 2. If the test continues to abort, escalate the problem.
1000	ABORT	System resources required to run this test are not available. The port may be in use on a valid call. Use **status data-module** to determine when the port is available for testing. 1. Retry the command at 1-minute intervals a maximum of 5 times. 2. If the test continues to abort and the port is not in use, escalate the problem.
1001	ABORT	Could not allocate the necessary system resources to run this test. 1. Retry the command at 1-minute intervals a maximum of 5 times. 2. If the test continues to abort, escalate the problem.
1002	ABORT	The system could not allocate time slots for the test. The system may be under heavy traffic conditions or it may have time slots out-of-service due to TDM-BUS errors. Refer to TDM-BUS Maintenance to diagnose any active TDM-BUS errors. 1. If system has no TDM-BUS errors and is not handling heavy traffic, repeat test at 1-minute intervals a maximum of 5 times. 2. If the test continues to abort, escalate the problem.

Continued on next page

Table 9-83. TEST #6 NPE Crosstalk Test — *Continued*

Error Code	Test Result	Description/ Recommendation
1003	ABORT	The system could not allocate a tone receiver for the test. The system may be oversized for the number of tone detectors present or some tone detectors may be out-of-service. 1. Look for TTR-LEV errors in the Error Log. If present, refer to TTR-LEV maintenance documentation. 2. Look for TONE-PT errors in the Error Log. If present, refer to TONE-PT maintenance documentation. 3. If neither condition exists, retry the test at 1-minute intervals a maximum of 5 times. 4. If the test continues to abort, escalate the problem.
1004	ABORT	The port has been seized by a user for a valid call. Use **status data-module** to determine when the port is available for testing. 1. Retry the command at 1-minute intervals a maximum of 5 times. 2. If the test continues to abort and the port is not in use, escalate the problem.
1020	ABORT	An existing error type 769 on this port prevented the test from running. 1. Follow the procedure following the Error Log Table for error type 769.
2000	ABORT	Response to the test request was not received within the allowable time period.
2100	ABORT	Could not allocate the necessary system resources to run this test. 1. Retry the command at 1-minute intervals a maximum of 5 times. 2. If the test continues to abort, escalate the problem.

Continued on next page

Table 9-83. TEST #6 NPE Crosstalk Test — *Continued*

Error Code	Test Result	Description/ Recommendation
Any	FAIL	The NPE of the tested port was found to be transmitting in error. This will cause noisy and unreliable connections. 1. Replace the circuit pack.
	PASS	The port is correctly using its allocated time slots. Investigate user-reported troubles on this port using other port tests and examining the ADU, external wiring, and customer equipment.

Conference Circuit Test (#7)

One or more (NPEs) reside on each circuit pack with a TDM Bus interface. The NPE controls port connectivity and gain, and provides conferencing functions on a per-port basis. The Conference Circuit Test verifies that the NPE channel for the port being tested can correctly perform the conferencing function. The NPE is instructed to listen to several different tones and conference the tones together. The resulting signal is then measured by a Tone Detector port. If the level of the tone is within a certain range, the test passes.

Table 9-84. TEST #7 Conference Circuit Test

Error Code	Test Result	Description/ Recommendation
	ABORT	Could not allocate the necessary system resources to run this test. 1. Retry the command at 1-minute intervals a maximum of 5 times. 2. If the test continues to abort, escalate the problem.
1000	ABORT	System resources required to run this test are not available. The port may be in use on a valid call. Use **status data-module** to determine when the port is available for testing.
1004	ABORT	The port has been seized by a user for a valid call. Use **status data-module** to determine when the port is available for testing. 1. Retry the command at 1-minute intervals a maximum of 5 times. 2. If the test continues to abort and the port is not in use, escalate the problem.
1020	ABORT	An existing error type 769 on this port prevented the test from running. 1. Follow the procedure following the Error Log Table for error type 769.

Continued on next page

Table 9-84. TEST #7 Conference Circuit Test — *Continued*

Error Code	Test Result	Description/ Recommendation
2000	ABORT	Response to the test request was not received within the allowable time period.
2100	ABORT	Could not allocate the necessary system resources to run this test. 1. Retry the command at 1-minute intervals a maximum of 5 times. 2. If the test continues to abort, escalate the problem.
Any	FAIL	The NPE of the tested port did not conference the tones correctly. This will cause noisy and unreliable connections. 1. Replace the circuit pack.
	PASS	The port can correctly conference multiple connections. Investigate user-reported troubles on this port using other port tests and examining the ADU, external wiring, and customer equipment.

Audit Update Test (#36)

This audit verifies that the hardware state of the Data Line is consistent with the system translations. The audit queries the port for the switchhook state, the software state is updated according to the returned value. Also, the audit data line options down to the port.

TEST #36 Audit Update Test

Error Code	Test Result	Description/ Recommendation
1006	ABORT	An existing error type 769 on this port prevented the test from running. 1. Follow the procedure following the Error Log Table for error type 769.
2000	ABORT	Response to the test request was not received within the allowable time period.
2100	ABORT	Could not allocate the necessary system resources to run this test.
	ABORT	Internal System Error
7	FAIL	Internal System Error 1. Try the command again at 1-minute intervals up to 5 times. 2. If the test continues to fail, escalate the problem.
	PASS	The hardware port state is consistent with the software state. Investigate user-reported troubles on this port using other port tests and examining the ADU, external wiring, and customer equipment.

Digital Loop Around Test (#171)

The Digital Loop Around Test checks the Data Line port's ability to transmit and receive data on the TDM Bus. Data is sent through an available Maintenance/Test digital port over the TDM Bus, internally looped through the Data Line port back onto the TDM Bus, and received again by the same Maintenance/Test digital port.

Note that only one of the two digital ports on a Maintenance/Test circuit pack is used for this test, and that port must be the **first** such port, i.e., port 02. If port 02 is in use, out-of-service, or not present, the test aborts. This test may fail if the Maintenance/Test digital port used by the test is not functioning properly. If there are any M/T-DIG errors in the Error Log, refer to the M/T-BD maintenance documentation to clear them up first. This test will pass regardless of any customer equipment that might be connected to the port, as long as the port is not in use by the equipment.

Table 9-85. TEST #171 Digital Loop Around Test

Error Code	Test Result	Description/ Recommendation
	ABORT	Internal System Error 1. Retry the command at 1-minute intervals a maximum of 5 times. 2. If the test continues to abort, escalate the problem.
1000	ABORT	System resources required to run this test are not available. The port may be in use on a valid call. Use **status data-module** to determine when the port is available for testing. 1. Retry the command at 1-minute intervals a maximum of 5 times. 2. If the test continues to abort and the port is not in use, escalate the problem.
1020	ABORT	An existing error type 769 on this port prevented the test from running. 1. Follow the procedure following the Error Log Table for error type 769.

Continued on next page

Table 9-85. TEST #171 Digital Loop Around Test — *Continued*

Error Code	Test Result	Description/ Recommendation
1042	ABORT	Port under test is a TTI port and has only default translations with no assigned extension. The executed test requires an assigned extension associated with the port being tested. Therefore, this test cannot successfully execute, so it aborts. 1. If there is a need to execute the test on this particular port then the tester must insure that the port is fully translated such that the port has an assigned extension.
1180	ABORT	There is no Maintenance/Test circuit pack digital port available to carry out the test. 1. Check to see if the Maintenance/Test digital ports are present. (Enter **list config** command; ports 02 and 03 should show). 2. If the digital ports (02 and 03) on the Maintenance/Test circuit pack are not present, refer to M/T-BD maintenance documentation. 3. If the digital ports are present, retry the command at 1-minute intervals a maximum of 5 times. 4. If test continues to abort escalate the problem.
1181	ABORT	No time-slots available to connect digital ports for the test. 1. Retry the command at 1-minute intervals a maximum of 5 times. 2. If the test continues to abort, escalate the problem.
1182	ABORT	Internal System Error. Failed to connect the digital ports with time-slots. 1. Retry the command at 1-minute intervals a maximum of 5 times. 2. If the test continues to abort, escalate the problem.

Continued on next page

Table 9-85. TEST #171 Digital Loop Around Test — *Continued*

Error Code	Test Result	Description/ Recommendation
1340	ABORT	No Maintenance/Test digital port is currently available to perform this test. 1. Use **list config** to determine whether any Maintenance/Test digital ports (ports 02 and 03 on the Maintenance/Test circuit pack) are present in the system. Because at least one Maintenance/Test circuit pack must be present in the PPN of a G3r system, there should be at least two such ports present. If the ports are present, proceed to step 2. Otherwise, determine why no ports appear in the **list config** display. Refer to M/T-DIG and M/T-BD maintenance documentation. 2. Look for M/T-DIG errors in the Error Log. If present, refer to M/T-DIG maintenance documentation. 3. If the ports are present and no errors are logged against them, retry the command at 1-minute intervals a maximum of 5 times. 4. If the test continues to abort, replace the Maintenance/Test circuit pack. 5. If test still aborts after replacement, escalate the problem.
1392	ABORT	This port is currently a TTI port and the test will not execute on it. 1. Verify that the port is a TTI port using either the **display port** command (the display shows that the port is a TTI port) or the **list config** command (the display shows a "t" for the port). 2. If either **list config** or **display port** indicate that the port is **not** a TTI port, escalate the problem. If both commands indicate that the port is a TTI port, the abort is correct for the test, and no action is necessary.

Continued on next page

Table 9-85. TEST #171 Digital Loop Around Test — *Continued*

Error Code	Test Result	Description/ Recommendation
2004	ABORT	Off Hook was not received from the Data Line device. 1. Busyout the digital port being tested on the Data Line circuit pack. Retry the command at 1-minute intervals a maximum of 5 times. 2. If the test still aborts, replace the circuit pack. 3. If the test continues to abort, escalate the problem.
2005	ABORT	The handshake between the Maintenance/Test circuit pack digital port and the data line port failed. 1. Look for M/T-DIG errors in the Error Log. If present, refer to M/T-DIG maintenance documentation. 2. Retry the command at 1-minute intervals a maximum of 5 times. 3. If the test still aborts, replace the Data Line circuit pack. 4. If test still aborts after replacement, escalate the problem.
2312	ABORT	Test did not complete, did not receive loop back data. 1. Look for M/T-DIG errors in the Error Log. If present, refer to M/T-BD maintenance documentation. 2. Retry the test, if still aborts, replace the Data Line circuit pack. 3. If test still aborts after replacement, escalate the problem.
2313	ABORT	Failed to receive a response from the Maintenance/Test digital port. 1. Look for M/T-DIG errors in the Error Log. If present, refer to M/T-BD maintenance documentation. 2. Retry the command at 1-minute intervals a maximum of 5 times. 3. If the test continues to abort, replace the Maintenance/Test circuit pack. 4. If test still aborts after replacement, escalate the problem.

Continued on next page

Table 9-85. TEST #171 Digital Loop Around Test — *Continued*

Error Code	Test Result	Description/ Recommendation
2314	ABORT	Data Line port did not respond to downlinked message. 1. Busyout the digital port being tested on the Data Line circuit pack. Retry the command at 1-minute intervals a maximum of 5 times. 2. If the test still aborts, replace the circuit pack. 3. If test still aborts after replacement, escalate the problem.
2500	ABORT	Internal system error. 1. Retry the command at 1-minute intervals a maximum of 5 times. 2. If the test continues to abort, escalate the problem.
	FAIL	The test failed because the data received did not match the data sent. This would indicate that there is a fault somewhere in the transmit/receive path to the TDM Bus, which will probably result in data corruption over this port. This test may fail if the Maintenance/Test digital port used by the test is not functioning properly. 1. Look for M/T-DIG errors in the Error Log. If present, refer to M/T-BD maintenance documentation. 2. Repeat Test #171. 3. If the test fails again, replace the Data Line circuit pack.
	PASS	The port can correctly transmit/receive data. Investigate user-reported troubles on this port using other port tests and examining the ADU, external wiring, and customer equipment.

DC-POWER (Single Carrier Cabinet Environment)

MO Name As It Appears in Alarm Log	Alarm Level	Initial System Technician Command to Run (a)	Full Name of MO
DC-POWER	MAJOR	test environment UU	Single Carrier Cabinet Environment

a. UU is the universal cabinet number indicated in the PORT field of the alarm log.

DEFINITY Generic 3r systems support two different cabinet types: multicarrier and single carrier. Single carrier cabinets are used only for EPNs. Both cabinet types may be powered by either AC or DC external power source. Environmental maintenance differs according to cabinet type and external power supply. Refer to the following table to determine which maintenance object documentation to use for environmental maintenance.

Cabinet Type	Power Source	Environmental Maintenance Objects
Single carrier (EPN)	AC or DC	DC-POWER (all environmental maintenance)
Multicarrier	AC	AC-POWER for AC-powered systems (external power source) POWER for AC-powered systems (battery backup) CARR-POW (carrier port power supply) CABINET (temperature and fan sensors)
Multicarrier	DC	CARR-POW (carrier port power supply) CABINET (temperature and fan sensors)

The DC-POWER maintenance object represents all environmental maintenance for single-carrier cabinets, whether the external power supply is AC or DC. This includes the external power supply and all Carrier Port Power Supplies in a port network composed of a single-carrier cabinet stack. The Carrier Port Power Supplies provide +5/-5/-48V DC to the circuit packs on the carrier. The following power supplies are used:

WP-91153	Accepts AC power input
676B	Accepts DC power input

Each power unit has one yellow LED. A lit LED signifies normal operation. An unlit LED signifies a loss of external power to the cabinet, or a fault in the power unit. When hardware detects a problem with any of these components, it reports the information to the system software through a single lead. System software does not differentiate between different environmental failures. Since several environmental elements of single-carrier cabinets are logged against the DC-POWER maintenance object, it is possible to have a DC-POWER alarm while there is still power to the system.

If a Carrier Port Power Supply is physically removed from a carrier in a single-carrier cabinet, there will not be a DC-POWER alarm. DC-POWER maintenance cannot distinguish between removal of the power supply and the physical absence of the cabinet.

There is a nominal power holdover of .25 second in an EPN single carrier cabinet.

Hardware Error Log Entries and Test to Clear Values

Single Carrier Cabinet Power Error Log Entries					
Error Type	**Aux Data**	**Associated Test**	**Alarm Level**	**On/Off Board**	**Test to Clear Value†**
0*	0	Any	Any	Any	test environment UU
513	0 or 1	Single Carrier Cabinet Power Query (#79)	MAJOR	ON	test environment UU r 2

* Run the Short Test Sequence first. If all tests pass, run the Long Test Sequence. Refer to the appropriate test description and follow the recommended procedures.

† UU is the universal cabinet number indicated in the PORT field of the Alarm Log.

System Technician-Demanded Tests: Descriptions and Error Codes

Always investigate tests in the order presented in the following table when inspecting errors in the system. By clearing error codes associated with the *Single Carrier Cabinet Power Query Test*, for example, you may also clear errors generated from other tests in the testing sequence. Test description(s) and recommended maintenance procedures follow for all errors that can occur during system technician-demanded testing.

Order of Investigation	Short Test Sequence	Long Test Sequence	D/ND*
Single Carrier Cabinet Power Query Test (#79)	X	X	ND
Emergency Transfer Query Test (#124) (a)	X	X	ND
External Alarm Lead Query Test (#120) (b)	X	X	ND
Analog Ring Generator Initialization Test (#117) (c)	X	X	ND
Analog Ring Generator Query Test (#118) (c)	X	X	ND

Notes:

a. Refer to EMG-XFER (Emergency Transfer) Maintenance documentation for a description of this test.

b. Refer to EXT-DEV (External Alarm Lead) Maintenance documentation for a description of this test.

c. Refer to RING-GEN (Analog Ring Generator) Maintenance documentation for a description of this test.

Single Carrier Cabinet Power Query Test (#79)

This test queries the EPN Maintenance circuit pack (in an EPN) about the status of the power in a single carrier cabinet system. This test can only detect power problems in carriers in the Port Network for which the Carrier Port Power Supply is physically present.

Table 9-86. TEST #79 Single Carrier Cabinet Power Query Test

Error Code	Test Result	Description/ Recommendation
1000	ABORT	System resources required to run this test are not available. 1. Retry the command at 1-minute intervals a maximum of 5 times. 2. If the test continues to abort, escalate the problem.
2000	ABORT	Response to the test request was not received within the allowable time period. 1. Retry the command at 1-minute intervals a maximum of 5 time. 2. If the test continues to ABORT with a 2000 error code, check for and resolve all MAINT (EPN Maintenance circuit pack) errors. Then, repeat the test. 3. If the test continues to ABORT with a 2000 error code, then escalate the problem.
2029 2319 2320 2500	ABORT	Internal System Error 1. Retry the command at 1-minute intervals a maximum of 5 times. 2. If the test continues to abort, escalate the problem.

Continued on next page

Table 9-86. TEST #79 Single Carrier Cabinet Power Query Test — *Continued*

Error Code	Test Result	Description/ Recommendation
1	FAIL	There is currently a problem with the environment of the power system. 1. The power supply to any one of the carriers may have been lost. a. Verify, and if necessary restore, AC power at the wall outlet for each carrier. b. Rerun the test. If the test still fails, proceed to Step 2. 2. One of the WP-91153 or 676-B power units for one of the carriers could be defective. a. If a WP-91153 or 676-B power unit does not have its yellow status LED on, then replace the power unit (procedure in Chapter 5, "Responding to Alarms and Errors"). b. Rerun the test. If the test still fails, proceed with Step 3. 3. The MAINT (EPN Maintenance Circuit Pack) could be incorrectly reporting this error. Resolve all alarms on these MOs, and rerun the test. There are failures that can occur on the EPN Maintenance circuit pack that *will not* be detected by their respective maintenance, but which will cause many, if not all, environment tests to fail. If more than two environment tests are failing, the suspect circuit pack, depending on the system configuration, should be replaced and the test rerun. If the test still fails, follow normal escalation procedures.
	PASS	The MAINT (EPN Maintenance Circuit Pack) has reported no problem with the power.

DETR-BD (Tone Detector Circuit)

MO Name As It Appears in Alarm Log	Alarm Level	Initial System Technician Command to Run (a)	Full Name of MO
DETR-BD	MINOR	test board UUCSS	Tone Detector Circuit Pack
DETR-BD	WARNING	test board UUCSS	Tone Detector Circuit Pack

a. UU is the universal cabinet number (1 for PPN, 2 -22 for EPNs). C is the carrier designation (A, B, C, D, or E). SS is the number of the slot in which the circuit pack resides (01 to 21).

All G3r V1 systems and G3rV2 systems using mu-Law companding mode use TN478 Tone Detector circuit packs. G3r V2 systems using A-law companding mode use TN420 Tone Detector circuit packs. For proper tone detection, the companding mode administered for the system must match that of the DETR-BD circuit pack. The companding mode is administered on the system-parameters country-options form. Refer to *DEFINITY Communications System Generic 3 V2 Implementation,* 555-230-653.

For all DETR-BD (Tone Detector Circuit Pack) errors, refer to XXX-BD.

DID-BD (Direct Inward Dial Trunk Circuit Pack)

MO Name As It Appears in Alarm Log	Alarm Level	Initial System Technician Command to Run (a)	Full Name of MO
DID-BD	MIN	test board UUCSS sh	Direct Inward Dial Trunk Circuit Pack
DID-BD	WRN	test board UUCSS sh	Direct Inward Dial Trunk Circuit Pack

a. UU is the universal cabinet number (1 for PPN, 2 -22 for EPNs). C is the carrier designation (A, B, C, D, or E). SS is the number of the slot in which the circuit pack resides (01 to 21). pp is the two digit port number (01, 02, ...).

Refer to XXX-BD (Common Port Circuit Pack) Maintenance documentation for circuit pack level errors. See also DID-TRK (DID Trunk) Maintenance documentation for related trunk information.

DID-DS1 (Direct Inward Dial Trunk)

MO Name As It Appears in Alarm Log	Alarm Level	Initial System Technician Command to Run (a)	Full Name of MO
DID-DS1	MAJOR*	test trunk *grp*/*mbr* l	Direct Inward Dial Trunk
DID-DS1	MINOR	test trunk *grp*/*mbr* l	Direct Inward Dial Trunk
DID-DS1	WARNING	test trunk *grp*/*mbr*	Direct Inward Dial Trunk

* A Major alarm on a trunk indicates that alarms on these trunks are not downgraded by the **set options** command and that at least 75 percent of the trunks in this trunk group are alarmed. For more information on the **set options** command, see Chapter 8, "Maintenance Commands".

The DID-DS1 trunk provides a digital Direct Inward Dial (DID) trunk from a Central Office switch to the system through a DS1 link. A 24-channel DS1 link can support up to 24 DID-DS1 trunk calls simultaneously. A 32-channel link can support up to 30 (not supported on G3r V1 systems). A DID-DS1 trunk can be used for digitized voice and data communications with appropriate DS1 signaling mode (for example, common channel signaling). The TN767 and TN464 series circuit packs support wink-start and immediate-start trunks and call processing signaling. See DS1-BD and UDS1-BD for more information about these circuit packs. Throughout this section, the term DS1 applies to both the DS1 or UDS1 circuit packs.

Information included in this section covers the in-line errors log, initialization tests, periodic tests, scheduled tests, system technician demand tests, and alarms escalation and elimination. Two trunk service states are specified in the DID-DS1 trunk maintenance:

out-of-service	The trunk is in a deactivated state and cannot be used for incoming calls.
in-service	The trunk is in an activated state and can be used for incoming calls.

If the DS1 circuit pack is out-of-service, then all trunks on the DS1 Interface circuit pack are put into the out-of-service state and a Warning alarm is raised.

Hardware Error Log Entries and Test to Clear Values

DID-DS1 Trunk Error Log Entries					
Error Type	**Aux Data**	**Associated Test**	**Alarm Level**	**On/Off Board**	**Test to Clear Value**
0*	0	Any	Any	Any	test trunk *grp#/mbr#*
1(a)	Any				
15(b)	Any	Port Audit and Update Test (#36)			
18(c)			WARNING	OFF	release trunk *grp#/mbr#*
130(d)		None	WARNING	ON	test trunk *grp#/mbr#*
257(e)	57474 57473				
513(f)	57392				
769(g)	57393				
1281		Conference Circuit Test (#7)	MIN/ WRN**	ON	test trunk *grp#/mbr#* l r 4
1537		NPE Crosstalk Test (#6)	MIN/ WRN**	ON	test trunk *grp#/mbr#* l r 3
1793(h)					test board *UUCSS* l
3840(i)		Port Audit and Update Test (#36)			

* Run the Short Test Sequence first. If all tests pass, run the Long Test Sequence. Refer to the appropriate test description and follow the recommended procedures.

** Major alarms on this MO may be downgraded to Warning alarms based on the value used in the set options command.

Notes:

a. DS1 Interface circuit pack detects a hardware error on the DS1 DID trunk. The Aux Data field indicates the following:

57476	On-hook before wink
57477	On-hook before ready to receive digits
57485	Wink too short for valid signal

Maintenance does not start any testing or generate any alarms in response to these errors. Escalate these error types to the next tier.

b. This is a software audit error that does not indicate any hardware malfunction. Run Short Test Sequence and investigate errors (if any).

c. The trunk has been taken out of service by a demand busyout. No calls can be made on this trunk.

d. This error type indicates that the circuit pack has been removed or has been insane for more than 11 minutes. To clear the error, reinsert or replace the circuit pack.

e. DS1 Interface circuit pack detects a hardware error on the DS1 DID trunk. The Aux Data field indicate the source of the error:

57474	Rotary dial rate above 12 pulses per second
57473	Rotary dial rate below 8 pulses per second

Escalate this error to the next tier.

f. DS1 Interface circuit pack detects a hardware error on the DS1 DID trunk. Aux Data 57392 indicates no external release on PBX disconnect. Escalate this error to the next tier.

g. DS1 Interface circuit pack detects a hardware error on the DS1 DID trunk. Aux Data 57393 indicates belated external release on PBX disconnect. Escalate this error to the next tier.

h. DS1 Interface circuit pack is out-of-service. Look for DS1-BD/UDS1-BD errors in Hardware Error Log. Refer to the appropriate DS1-BD/UDS1-BD (DS1/UDS1 Trunk Circuit Pack) Maintenance documentation for details.

i. Port Audit and Update Test (#36) failed due to an internal system error. Enter **status trunk** command to verify the status of the trunk. If the trunk is out-of-service, then enter the **release trunk** command to put it back to in-service. Retry the test command. If the test continues to abort, then escalate the problem.

System Technician-Demanded Tests: Descriptions and Error Codes

Always investigate tests in the order they are presented in the table below when inspecting errors in the system. By clearing error codes associated with the *NPE Crosstalk Test,* for example, you may also clear errors generated from other tests in the testing sequence.

Order of Investigation	ShortTest Sequence	LongTest Sequence	D/ND*
NPE Crosstalk Test (#6)		X	ND
Conference Circuit Test (#7)		X	ND
Port Audit and Update Test (#36)	X	X	ND

* D = Destructive; ND = Nondestructive

NPE Crosstalk Test (#6)

One or more Network Processing Elements (NPEs) reside on each circuit pack with a TDM Bus interface. (The TN464 UDS1 circuit pack has one SCOTCH-NPE chip instead of several NPE chips.) The NPE controls port connectivity and gain, and provides conferencing functions on a per-port basis. The NPE Crosstalk Test verifies that this port's NPE channel talks on the selected time slot and never crosses over to time slots reserved for other connections. If the NPE is not working correctly, one-way and noisy connections may be observed. This test is usually only part of a port's Long Test Sequence and takes about 20 to 30 seconds to complete.

Table 9-87. TEST #6 NPE Crosstalk Test

Error Code	Test Result	Description/ Recommendation
	ABORT	System resources required for this test are not available. 1. Retry the command at 1-minute intervals a maximum of 5 times. 2. If the test continues to abort, escalate the problem.
1000	ABORT	System resources required to run this test are not available. The port may be in use on a valid call. Use the **status station** or **status trunk** command to determine when the port is available for testing. 1. Retry the command at 1-minute intervals a maximum of 5 times. 2. If the test continues to abort, and the port is not in use, escalate the problem.
1001	ABORT	System resources required for this test are not available. 1. Retry the command at 1-minute intervals a maximum of 5 times. 2. If the test continues to abort, escalate the problem.

Continued on next page

Table 9-87. TEST #6 NPE Crosstalk Test — *Continued*

Error Code	Test Result	Description/ Recommendation
1002	ABORT	The system could not allocate time slots for the test. The system may be under heavy traffic conditions or it may have time slots out-of-service due to TDM BUS error. The **status health** command can be used to determine if the system is experiencing heavy traffic. Refer to TDM-BUS (TDM Bus) Maintenance documentation to diagnose any active TDM Bus errors. 1. If system has no TDM-BUS errors and is not handling heavy traffic, repeat test at 1-minute intervals a maximum of 5 times. 2. If the test continues to abort, escalate the problem.
1003	ABORT	The system could not allocate a tone receiver for the test. The system may be oversized for the number of Tone Detectors present or some Tone Detectors may be out-of-service. The **list measurements tone-receiver** command will display information on the system's tone receivers. 1. Look for TTR-LEV errors in the Error Log. If present, refer to TTR-LEV (TTR Level) Maintenance documentation. 2. Look for TONE-PT errors in the Error Log. If present, refer to TONE-PT (Tone Generator) Maintenance documentation. 3. If neither condition exists, retry the test at 1-minute intervals a maximum of 5 times. 4. If the test continues to abort, escalate the problem.
1004	ABORT	The port has been seized by a user for a valid call. Use the **status trunk** command to determine when the port is available for testing. 1. Retry the command at 1-minute intervals a maximum of 5 times. 2. If the test continues to abort, and the port is not in use, escalate the problem.

Continued on next page

Table 9-87. TEST #6 NPE Crosstalk Test — *Continued*

Error Code	Test Result	Description/ Recommendation
1020	ABORT	The test did not run due to a previously existing error on the specific port or a more general circuit pack error. 1. Examine Error Log for existing errors against this port or the circuit pack and attempt to diagnose the previously existing error.
2000	ABORT	Response to the test request was not received within the allowable time period.
2100	ABORT	System resources required for this test are not available. 1. Retry the command at 1-minute intervals a maximum of 5 times. 2. If the test continues to abort, escalate the problem.
	FAIL	The NPE of the tested port was found to be transmitting in error. This will cause noisy and unreliable connections. 1. Replace the circuit pack.
	PASS	The port is correctly using its allocated time slots. User-reported troubles on this port should be investigated using other port tests and by examining station, trunk, or external wiring.

Conference Circuit Test (#7)

One or more Network Processing Elements (NPEs) reside on each circuit pack with a TDM Bus interface. (The TN464 UDS1 circuit pack has one SCOTCH-NPE chip instead of several NPE chips). The NPE controls port connectivity and gain, and provides conferencing functions on a per-port basis. The Conference Circuit Test verifies that the NPE channel for the port being tested can correctly perform the conferencing function. The NPE is instructed to listen to several different tones and conference the tones together. The resulting signal is then measured by a Tone Detector port. If the level of the tone is within a certain range, the test passed.

Table 9-88. TEST #7 Conference Circuit Test

Error Code	Test Result	Description/ Recommendation
	ABORT	Could not allocate the necessary system resources to run this test. 1. Retry the command at 1-minute intervals a maximum of 5 times. 2. If the test continues to abort, escalate the problem.
1000	ABORT	System resources required to run this test are not available. The port may be in use on a valid call. Use the **status station** or **status trunk** command to determine when the port is available for testing.
1004	ABORT	The port has been seized by a user for a valid call. Use the **status station** or **status trunk** command to determine when the port is available for testing. 1. Retry the command at 1-minute intervals a maximum of 5 times. 2. If the test continues to abort, and the port is not in use, escalate the problem.
1018	ABORT	Test disabled via administration. This only applies to analog stations. Verify that the ‘‘Maintenance Tests?’’ field on the Trunk Group Form is set to "n". To enable the test, issue the **change trunk-group x** command where ‘‘x’’ equals the number of the trunk group to be tested. Then change the entry in the ‘‘Maintenance Tests?’’ field on the form to ‘‘y.’’

Continued on next page

Table 9-88. TEST #7 Conference Circuit Test — *Continued*

Error Code	Test Result	Description/ Recommendation
1020	ABORT	The test did not run due to a previously existing error on the specific port or a more general circuit pack error. 1. Examine Error Log for existing errors against this port or the circuit pack and attempt to diagnose the previously existing error.
2000	ABORT	Response to the test request was not received within the allowable time period.
2100	ABORT	Could not allocate the necessary system resources to run this test. 1. Retry the command at 1-minute intervals a maximum of 5 times. 2. If the test continues to abort, escalate the problem.
	FAIL	The NPE of the tested port did not conference the tones correctly. This will cause noisy and unreliable connections. 1. Replace the circuit pack.
	PASS	The port can correctly conference multiple connections. User-reported troubles on this port should be investigated using other port tests and by examining station, trunk, or external wiring.

Port Audit and Update Test (#36)

This test sends port level translation data from the switch processor to the DS1 Interface circuit pack to assure that the trunk's translation is correct. Translation updates include the following data: trunk type (in/out), dial type, timing parameters, and signaling bits enabled. The port audit operation verifies the consistency of the current state of the trunk as kept in the DS1 Interface circuit pack and in the switch software.

TEST #36 Port Audit and Update Test

Error Code	Test Result	Description/ Recommendation
	ABORT	Internal System Error 1. Retry the command at 1-minute intervals a maximum of 5 times. 2. If the test continues to abort, escalate the problem.
2000	ABORT	Response to the test request was not received within the allowable time period.
2100	ABORT	Could not allocate the necessary system resources to run this test.
	FAIL	Test failed due to internal system error. 1. Retry the command at 1-minute intervals a maximum of 5 times. 2. If test continues to fail, escalate the problem.
	PASS	Trunk translation has been updated successfully. The current trunk states kept in the DS1 Interface circuit pack and switch software are consistent. If the trunk is busied out, the test will not run but will return PASS. To verify that the trunk is in-service: 1. Enter the **status trunk** command to verify that the trunk is in-service. If the trunk is in-service, no further action is necessary. If the trunk is out-of-service, continue to step 2. 2. Enter the **release trunk** command to put the trunk back into in-service. 3. Retry the test command.

DID-TRK (Direct Inward Dial Trunk)

MO Name As It Appears in Alarm Log	Alarm Level	Initial System Technician Command to Run (a)	Full Name of MO
DID-TRK	MAJOR (b)	test port *UUCSSpp* l	DID Trunk
DID-TRK	MINOR	test port *UUCSSpp* l	DID Trunk
DID-TRK	WARNING	None	DID Trunk

a. UU is the universal cabinet number (1 for PPN, 2 -22 for EPNs). C is the carrier designation (A, B, C, D, or E). SS is the number of the slot in which the circuit pack resides (01 to 21). pp is the two digit port number (01, 02, ...).

b. A MAJOR alarm on a trunk indicates that alarms on these trunks are not downgraded by the **set options** command and that at least 75 percent of the trunks in this trunk group are alarmed.

NOTE:
Many trunk problems are caused by incorrect settings of parameters on the trunk group administration form. Settings must be compatible with the local environment and with parameter settings on the far-end. Refer to DEFINITY. Communications System Generic 3 V2 Implementation, 555-230-653 for information on how to administer trunks. The Application Notes section of that book shows the correct settings for administrable timers and other parameters on a country-by-country basis.

Direct Inward Dial trunks connect the switch to the Central Office (CO), and allow outside parties to call directly to an extension in the system. DID trunk circuit packs support eight incoming-only ports. Each port provides an interface between the 2-wire analog CO line and the 4-wire TDM bus on the switch. The following circuit packs support DID trunks. G3r V1 systems support only the TN753.

TN436	Australia
TN459	UK
TN753	US
TN2139	Italy
TN2146	Belgium, Netherlands

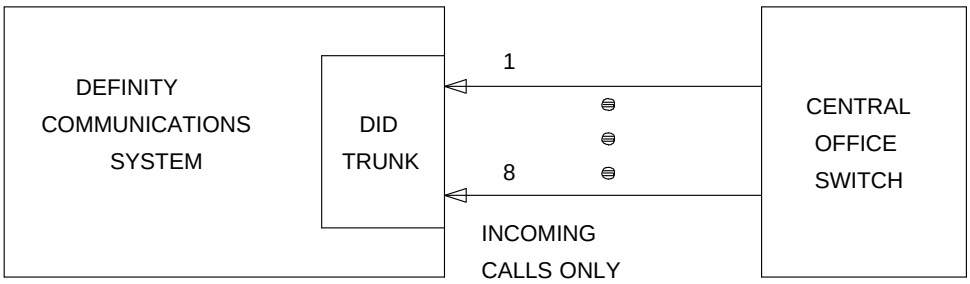

Figure 9-17. DID Trunks

DID Trunk Operation

The DID port receives three to five digits from the CO that are used to directly connect an outside caller to the called station without assistance from an attendant. For each call, the CO switch signals the system by opening and closing individual DID loops (one of the eight ports), causing the starting or stopping of loop current.

A DID trunk operation involves three significant aspects:

Transmission	Deals with the interface requirements regarding all AC signals. Transmission includes gain, analog to digital encoding, and digital to analog decoding.
Signaling	Involves interpretation of DC signals appearing on Tip and Ring to and from the CO. These signals include off-hook, on-hook, and dial pulse detection.
Switch Connection	Involves the connection between the trunk circuitry and the TDM Bus of the system. It operates the switchhook connection to the TDM Bus.

DID Trunk Testing

The system utilizes four tests of on-board circuitry to diagnose the health of the trunk. These are described in the following sections.

Additionally, in-line testing which can generate errors, is performed while a call is in progress. See the Error Log table for a description of these errors. These errors

may be reproduced by placing a call on the trunk and checking the Hardware Error Log.

Problems detected during signaling may be caused by off-board faults in the CO switch or connections for which a Warning alarm is raised.

Before a maintenance test can be run on a port, the port must be idle. If an incoming call seizes a port that is being tested, the test will abort and the incoming call will proceed.

For transmission and signaling standard specification, refer to Digital PBX Standards document RS4648.

Ports Out-of-Service without Errors or Alarms

A common trouble on DID trunks that produces no errors or alarms occurs when the CO busies out (disconnects) the port. This situation occurs when the CO thinks there are problems with the DID port. In this case, no incoming calls will be possible through this port. This may result in complaints from outside callers trying unsuccessfully to call in. This problem can be diagnosed by listing measurements on lightly used trunks. If a particular port is detected as not in use, a call to the CO will be necessary to get the connection back in service.

Hardware Error Log Entries and Test to Clear Values

DID Trunk Error Log Entries					
Error Type	**Aux Data**	**Associated Test**	**Alarm Level**	**On/Off Board**	**Test to Clear Value**
0*	0	Any	Any	Any	test port *UUCSSpp* sh r 1
1(a)	Any	None	WRN	OFF	
1(b)	57476	None	WRN	OFF	
1(c)	57477	None	WRN	OFF	
1(d)	57483	None	WRN	OFF	
15(e)	Any	Port Audit Update (#36)			
18	0	busyout trunk *grp/mbr*	WRN	OFF	release trunk *grp/mbr*
130(f)		None	WRN	ON	test trunk *grp/mbr*
257(g)	57472	None	WRN	OFF	
257(h)	57473	None	WRN	OFF	
257(i)	57474	None	WRN	OFF	
257(j)	57475	None	WRN	OFF	
513(k)	57392	None	MIN/ WRN†	OFF	
510(l)	57393	None			
769	Any	Port Diagnostic (#35)	MIN/ WRN†	ON	test port *UUCSSpp* r 3
1025		Loop Around and Conference (#33)	MIN/ WRN†	ON	test port *UUCSSpp* l r 3
1281		NPE Crosstalk (#6)	MIN/ WRN†	ON	test port *UUCSSpp* l r 3
1537	Any	Port Diagnostic (#35)	MAJ/ MIN/ WRN†	OFF	test port *UUCSSpp* r 3
1793(m)	57489	None	None		

* Run the Short Test Sequence first. If all tests pass, run the Long Test Sequence. Refer to the appropriate test description and follow the recommended procedures.

† Major alarms on this MO may be downgraded to Warning alarms based on the value used in the set options command.

Notes:

See also the preceding section on trunk problems without errors or alarms.

a. This condition occurs when the tone detector times out waiting for digits. Change wink/immediate-start parameter to wink/immediate-start and rotary/tone-dial parameters.

    1. Verify trunk administered wink/immediate-start parameter.
    2. Test trunk using BUTT set.
    3. Refer problem to CO.

b. Rotary dial before wink — This condition occurs when the CO starts dialing before the PBX sends wink on a wink-start trunk.

    1. Verify trunk administered wink/immediate-start parameter.
    2. Refer problem to CO.

c. Rotary dial too early — This condition occurs when the CO starts dialing too soon after seizure on an immediate-start trunk.

    1. Verify trunk administered wink/immediate-start parameter.
    2. Refer problem to CO.

d. Rotary dial pulse during wink — This condition occurs when the CO sends rotary dial digits too soon after seizure on a wink-start trunk.

    1. Verify trunk administered wink/immediate-start parameter.
    2. Refer problem to CO.

e. This is a software audit error that does not indicate any hardware malfunction. Run Short Test Sequence and investigate associated errors (if any).

f. This error type indicates that the circuit pack has been removed or has been insane for more than 11 minutes. To clear the error, reinsert or replace the circuit pack.

g. Rotary dial pulse on-hook longer than 105 msec — Break between rotary pulses is too long.

    1. Test trunk by performing an incoming test call.
    2. Refer problem to CO.

h. Rotary dial rate below 8 pulses/sec — More than 135 msec between two successive breaks.

    1. Verify trunk administered interdigit-timing parameters.
    2. Refer problem to CO.

i. Rotary dial rate above 12 pulses/sec — Less than 75 msec between two successive breaks.

    1. Verify trunk administered interdigit-timing parameters.

2. Refer problem to CO.

j. Digit detection — CO is starting new rotary dial digit within 150 msec of previous digit.

   1. Verify trunk administered interdigit timing parameters.
   2. Refer problem to CO.

k. Loop current active — CO not releasing trunk after PBX disconnect. Occurs when the PBX end drops first and the CO does not release the trunk within 4 minutes.

   1. Verify the interface to the network with a hand telephone set. If calls are placed correctly, then refer problem to the CO.
   2. If unable to place calls or this equipment is not available, check the status on port using the **status trunk** command. If active but not connected, disconnect bridging clips at the network interface. Check status on the trunk. If trunk went idle, then replace clips. If trunk is still active but unable to place calls, refer problem to the CO.

l. Late CO trunk release — This event only occurs after the occurrence of Error Type 513. The CO released the trunk 4 minutes after the PBX dropped the call. This event decrements the severity (error count) of Error Type 513, or may mean the problem related to Error Type 513 has been fixed.

   Verify that Error Type 513 does not occur again. Refer to Error 513.

m. Incomplete Dial timer expired. This error only applies to the TN459 and indicates a problem with incoming dialing stream. Refer the problem to the CO.

System Technician-Demanded Tests: Descriptions and Error Codes

Always investigate tests in the order presented in the table below when inspecting errors in the system. By clearing error codes associated with the *NPE Crosstalk Test* for example, you may also clear errors generated from subsequent tests in the testing sequence..

Order of Investigation	ShortTest Sequence	LongTest Sequence	D/ND*
NPE Crosstalk Test (#6)		X	ND
Port Diagnostic Test (#35)	X	X	ND
Loop Around and Conference Circuit Test (#33)		X	ND
Port Audit Update Test (#36)	X	X	ND

* D = Destructive; ND = Nondestructive

NPE Crosstalk Test (#6)

One or more Network Processing Elements (NPEs) reside on each circuit pack with a TDM Bus interface. The NPE controls port connectivity and gain, and provides conferencing functions on a per-port basis. The NPE Crosstalk Test verifies that this port's NPE channel talks on the selected time slot on the TDM bus and never crosses over to time slots reserved for other connections. If the NPE is not working correctly, one-way and noisy connections may be observed. This test is usually only part of a port's Long Test Sequence and takes about 20 to 30 seconds to complete.

Table 9-89. TTEST #6 NPE Crosstalk Test

Error Code	Test Result	Description/ Recommendation
	ABORT	Could not allocate the necessary system resources to run this test. 1. Retry the command at 1-minute intervals a maximum of 5 times. 2. If the test continues to abort, escalate the problem.
1000	ABORT	System resources required to run this test are not available. The port may be busy with a valid call. Use the **display port UUCSSpp** command to determine the station extension, attendant number, or trunk group/member number of the port. Use the **status station**, **status attendant**, or **status trunk** command to determine the service state of the port. If the service state indicates that the port is in use, then the port is unavailable for certain tests. (See Chapter 8, "Maintenance Commands", for a full description of all possible states.) You must wait until the port is idle before retesting. Attendants are always in use (off-hook) if the handset is plugged in and the port is not busied out. 1. If the port status is active but the port is not in use (no calls), then check the Error Log for Error Type 513 (see Error Log table for description of this error and required actions). The port may be locked up. 2. If the port status is idle, then retry the command at 1-minute intervals a maximum of 5 times. 3. If the test continues to abort, escalate the problem.
1001	ABORT	Could not allocate the necessary system resources to run this test. 1. Retry the command at 1-minute intervals a maximum of 5 times. 2. If the test continues to abort, escalate the problem.

Continued on next page

Table 9-89. TTEST #6 NPE Crosstalk Test — *Continued*

Error Code	Test Result	Description/ Recommendation
1002	ABORT	The system could not allocate time slots for the test. The system may be under heavy traffic conditions or it may have time slots out-of-service due to TDM-BUS errors. Refer to TDM-BUS (TDM Bus) Maintenance documentation to diagnose any active TDM-BUS errors. 1. If system has no TDM-BUS errors and is not handling heavy traffic, repeat test at 1-minute intervals a maximum of 5 times. 2. If the test continues to abort, escalate the problem.
1003	ABORT	The system could not allocate a tone receiver for the test. The system may be oversized for the number of Tone Detectors present or some Tone Detectors may be out-of-service. 1. Look for TTR-LEV errors in the Error Log. If present, refer to TTR-LEV (TTR Level) Maintenance documentation. 2. Look for TONE-PT errors in the Error Log. If present, refer to TONE-PT (Tone Generator) Maintenance documentation. 3. If neither condition exists, retry the test at 1-minute intervals a maximum of 5 times. 4. If the test continues to abort, escalate the problem.

Continued on next page

Table 9-89. TTEST #6 NPE Crosstalk Test — *Continued*

Error Code	Test Result	Description/ Recommendation
1004	ABORT	The port was seized by a valid call during the test. The test has been aborted. Use the **display port UUCSSpp** command to determine the station extension, attendant number, or trunk group/member number of the port. Use the **status station**, **status attendant**, or **status trunk** command to determine the service state of the port. If the service state indicates that the port is in use, then the port is unavailable for certain tests. (See Chapter 8, "Maintenance Commands", for a full description of all possible states.) You must wait until the port is idle before retesting. Attendants are always in use (off-hook) if the handset is plugged in and the port is not busied out. 1. Retry the command at 1-minute intervals a maximum of 5 times. 2. If the test continues to abort and the port is not in use, escalate the problem.
2000	ABORT	Response to the test request was not received within the allowable time period.
2100	ABORT	Could not allocate the necessary system resources to run this test. 1. Retry the command at 1-minute intervals a maximum of 5 times. 2. If the test continues to abort, escalate the problem.
Any	FAIL	The NPE of the tested port was found to be transmitting in error. This will cause noisy and unreliable connections. This problem may be caused by bad Tone Detectors. 1. Test all Tone-Clock circuit packs, and resolve any errors on these circuit packs before any action is taken on the DID circuit pack. Then repeat the test. 2. If the test fails again, replace the DID circuit pack.
	PASS	The port is correctly using its allocated time slots. User-reported troubles on this port should be investigated using other port tests and by examining station, trunk, or external wiring.

Loop Around and Conference Circuit Test (#33)

This test checks the reflective and non-reflective loop around and conference capabilities of a DID port circuit. The test that uses 404-Hz, 1004-Hz, and 2804-Hz tones is an on-board test only. Each tone is separately transmitted to and from the port (loop around within the port) and verified.

This test may fail due to noise induced by adjacent electric power lines. Customers having this problem should resolve it with their local power company. To temporarily alleviate the alarm caused by the failure of this test, the test may be disabled from trunk administration Test field. (This also disables the port diagnostic test.)

Table 9-90. TEST #33 Loop Around and Conference Circuit Test

Error Code	Test Result	Description/ Recommendation
	ABORT	Could not allocate the necessary system resources to run this test. 1. Retry the command at 1-minute intervals a maximum of 5 times. 2. If the test continues to abort, escalate the problem.

Continued on next page

Table 9-90. TEST #33 Loop Around and Conference Circuit Test — *Continued*

Error Code	Test Result	Description/ Recommendation
1000	ABORT	System resources required to run this test are not available. The port may be busy with a valid call. Use the **display port UUCSSpp** command to determine the station extension, attendant number, or trunk group/member number of the port. Use the **status station**, **status attendant**, or **status trunk** command to determine the service state of the port. If the service state indicates that the port is in use, then the port is unavailable for certain tests. (See Chapter 8, "Maintenance Commands", for a full description of all possible states.) You must wait until the port is idle before retesting. Attendants are always in use (off-hook) if the handset is plugged in and the port is not busied out. 1. If the port status is active but the port is not in use (no calls), then check the Error Log for Error Type 513 (see Error Log table for description of this error and required actions). The port may be locked up. 2. If the port status is idle, then retry the command at 1-minute intervals a maximum of 5 times. 3. If the test continues to abort, escalate the problem.

Continued on next page

Table 9-90. TEST #33 Loop Around and Conference Circuit Test — *Continued*

Error Code	Test Result	Description/ Recommendation
1004	ABORT	The port was seized by a valid call during the test. The test has been aborted. Use the **display port UUCSSpp** command to determine the station extension, attendant number, or trunk group/member number of the port. Use the **status station**, **status attendant**, or **status trunk** command to determine the service state of the port. If the service state indicates that the port is in use, then the port is unavailable for certain tests. (See Chapter 8, "Maintenance Commands", for a full description of all possible states.) You must wait until the port is idle before retesting. Attendants are always in use (off-hook), if the handset is plugged in and the port is not busied out. 1. Retry the command at 1-minute intervals a maximum of 5 times. 2. If the test continues to abort and the port is not in use, escalate the problem.
1018	ABORT	Test disabled via administration. Verify that the ‘‘Maintenance Tests?’’ field on the Trunk Group Form is set to "n". To enable the test, issue the **change trunk-group x** command where ‘‘x’’ equals the number of the trunk group to be tested. Then change the entry in the ‘‘Maintenance Tests?’’ field on the form to ‘‘y.’’
2100	ABORT	Could not allocate the necessary system resources to run this test. 1. Retry the command at 1-minute intervals a maximum of 5 times. 2. If the test continues to abort, escalate the problem.

Continued on next page

Table 9-90. TEST #33 Loop Around and Conference Circuit Test — *Continued*

Error Code	Test Result	Description/ Recommendation
3	FAIL	The non-reflective 1004-Hz tone test failed. Echo was detected from the port. The port may still be operational, or the problem may be off-board. See the caution and repair steps at the end of these FAIL results.
7	FAIL	The conference capabilities of the port failed. The port may still be operational, or the problem may be off-board (connections or CO). See the caution and repair steps at the end of these FAIL results.
129	FAIL	The reflective 404-Hz tone test failed. Poor quality transmission was detected to or from the port. The problem may be off-board. See the caution and repair steps at the end of these FAIL results.
131	FAIL	The reflective 1004-Hz tone test failed. Poor quality transmission was detected to or from the port. The problem may be off-board. See the caution and repair steps at the end of these FAIL results.

Continued on next page

Table 9-90. TEST #33 Loop Around and Conference Circuit Test — *Continued*

Error Code	Test Result	Description/ Recommendation
133	FAIL	The reflective 2804-Hz tone test failed. Poor quality transmission was detected to or from the port. The problem may be off-board. **CAUTION:** *This test may fail due to noise induced by adjacent electric power lines. Customers having this problem should resolve it with their local power company to temporarily alleviate the alarm caused by the failure of this test. The test may be disabled from trunk administration Test field. (This also disables the port diagnostic test.)* 1. To make sure the problem is on-board, disconnect port from the CO and retry test. Coordinate this with the CO, or do it after busy hours; otherwise, the CO may put the connection out-of-service. 2. If retry fails, replace the circuit pack. 3. If retry passes and no troubles have been reported, then disable test. If retry passes and troubles have been reported, refer problem to the CO. **NOTE:** If the Loop Around and Conference Circuit Test fails for all ports on a circuit pack, a -5 volt power problem is indicated. If a TN736 or TN752 power unit circuit pack is present, either the 631DB AC power unit or the 676B DC power unit may be defective. (The 631DB power unit is used in a medium cabinet powered by an AC source. The 645B power unit is used in a medium cabinet powered by a DC power source.) The system may contain a TN736 or TN752 power unit circuit pack OR a 631DB AC power unit, BUT NOT BOTH TYPES OF POWER UNITS. To investigate problems with a 631DB AC power unit, refer to CARR-POW (Carrier Port Power Unit for AC-Powered Systems) Maintenance documentation. To investigate problems with a 645B DC power unit, refer to CARR-POW (Carrier Port Power Unit for DC-Powered Systems) Maintenance documentation.

Table 9-90. TEST #33 Loop Around and Conference Circuit Test — *Continued*

Error Code	Test Result	Description/ Recommendation
	PASS	DID Trunk Loop Around and Conference Test is successful. This port is functioning properly. 1. If users are reporting troubles, examine loop connections to the port and refer problem to the CO.

Port Diagnostic Test (#35)

This test checks a port's battery feed circuitry. The battery feed circuitry is tested for on-/off-hook detection, battery shutdown, and battery reversal (WINK) capabilities.

Table 9-91. TEST #35 Port Diagnostic Test

Error Code	Test Result	Description/ Recommendation
	ABORT	Could not allocate the necessary system resources to run this test. 1. Retry the command at 1-minute intervals a maximum of 5 times. 2. If the test continues to abort, escalate the problem.
1000	ABORT	System resources required to run this test are not available. The port may be busy with a valid call. Use the **display port UUCSSpp** command to determine the station extension, attendant number, or trunk group/member number of the port. Use the **status station**, **status attendant**, or **status trunk** command to determine the service state of the port. If the service state indicates that the port is in use, then the port is unavailable for certain tests. (See Chapter 8, "Maintenance Commands", for a full description of all possible states.) You must wait until the port is idle before retesting. Attendants are always in use (off-hook) if the handset is plugged in and the port is not busied out. 1. If the port status is active but the port is not in use (no calls), then check the Error Log for Error Type 513 (see Error Log table for description of this error and required actions). The port may be locked up. 2. If the port status is idle, then retry the command at 1-minute intervals a maximum of 5 times. 3. If the test continues to abort, escalate the problem.

Continued on next page

Table 9-91. TEST #35 Port Diagnostic Test — *Continued*

Error Code	Test Result	Description/ Recommendation
1004	ABORT	The port was seized by a valid call during the test. The test has been aborted. Use the **display port UUCSSpp** command to determine the station extension, attendant number, or trunk group/member number of the port. Use the **status station**, **status attendant**, or **status trunk** command to determine the service state of the port. If the service state indicates that the port is in use, then the port is unavailable for certain tests. (See Chapter 8, "Maintenance Commands", for a full description of all possible states.) You must wait until the port is idle before retesting. Attendants are always in use (off-hook) if the handset is plugged in and the port is not busied out. 1. Retry the command at 1-minute intervals a maximum of 5 times. 2. If the test continues to abort and the port is not in use, escalate the problem.
1018	ABORT	Test has been disabled by trunk group administration. Verify that the ‘‘Maintenance Tests?’’ field on the Trunk Group Form is set to "n". To enable the test, issue the **change trunk-group x** command where ‘‘x’’ equals the number of the trunk group to be tested. Then change the entry in the ‘‘Maintenance Tests?’’ field on the form to ‘‘y.’’
2000	ABORT	Response to the test request was not received within the allowable time period.
2100	ABORT	Could not allocate the necessary system resources to run this test. 1. Retry the command at 1-minute intervals a maximum of 5 times. 2. If the test continues to abort, escalate the problem.

Continued on next page

Table 9-91. TEST #35 Port Diagnostic Test — *Continued*

Error Code	Test Result	Description/ Recommendation
61446	FAIL	Battery feed test failed. A loop current fault was detected. This is most probably an incoming CO-line problem. This failure code is only reported by the TN2139 Italian DID circuit pack. 1. Check the incoming CO-line for loop current. If none is detected refer the problem to the CO. 2. If the CO-line checks out OK, the failure must be on the DID port. Replace the circuit pack.
61456	FAIL	Battery feed test failed. An on-board problem was detected. This port is out-of-service. 1. Replace circuit pack.
61472	FAIL	Battery feed test failed. A problem with the incoming CO-line was detected. 1. Check the incoming CO-line for proper operation. If warranted, refer the problem to the CO. 2. If the CO-line is not at fault, the failure must be on the DID port. Replace the circuit pack.
	PASS	Current flow was detected for this port. 1. User-reported troubles on this port should be investigated using other port tests and by examining connections. 2. Refer problem to the CO.

Port Audit Update Test (#36)

This test will send updates of the DID port translation for all ports on the circuit pack that have been translated. The update is non-disruptive and guards against possible corruption of translation data contained on the circuit pack. No response message is expected from the circuit pack once it receives translation updates. The port translation data includes:

- Wink or immediate start trunk
- Dial tone or rotary dialing trunk
- Rotary dialing inter-digit timing
- Network balance R/RC
- Disconnect timing

TEST #36 Port Audit Update Test

Error Code	Test Result	Description/ Recommendation
	ABORT	Could not allocate the necessary system resources to run this test. 1. Retry the command at 1-minute intervals a maximum of 5 times. 2. If the test continues to abort, escalate the problem.
1006	ABORT	The port is in out-of-service state. This test cannot be run. 1. Retry the command once the port is in service.
2100	ABORT	Could not allocate the necessary system resources to run the test.
	FAIL	Internal system error 1. Retry the command at 1-minute intervals a maximum of 5 times. 2. If test continues to fail, escalate the problem.
	PASS	This test passed. Translation information was successfully updated on the circuit pack. 1. If signaling troubles are reported (Error Types 1, 257, or 513 in Error Log table), verify translation information for this port. 2. Refer problem to the CO.

DIG-BD (Digital Line Circuit Pack)

MO Name As It Appears in Alarm Log	Alarm Level	Initial System Technician Command to Run (a)	Full Name of MO
DIG-BD	MIN	test board UUCSS sh	Digital Line Circuit Pack
DIG-BD	WRN	test board UUCSS sh	Digital Line Circuit Pack

a. UU is the universal cabinet number (1 for PPN, 2 -22 for EPNs). C is the carrier designation (A, B, C, D, or E). SS is the number of the slot in which the circuit pack resides (01 to 21).

Refer to XXX-BD (Common Port Circuit Pack) Maintenance documentation for circuit pack level errors. See also DIG-LINE (Digital Line) Maintenance documentation for related line information.

DIG-LINE (Digital Line)

MO Name As It Appears in Alarm Log	Alarm Level	Initial System Technician Command to Run (a)	Full Name of MO
DIG-LINE	MINOR	test port *UUCSSpp* l	Digital Line
DIG-LINE	WARNING	test port *UUCSSpp* sh	Digital Line

a. UU is the universal cabinet number (1 for PPN, 2 -44 for EPNs). C is the carrier designation (A, B, C, D, or E). SS is the number of the slot in which the circuit pack resides (01 to 21). pp is the two digit port number (01, 02, ...).

DIG-LINE maintenance monitors and tests ports on Digital Line circuit packs and the hardware connected to those ports for lines administered as a digital station. These include stations with just a digital voice terminal and stations with a digital voice terminal and a linked data module. Stand-alone data modules, and data adaptors in stand-alone mode, are covered by the PDMODULE and TDMODULE maintenance objects. Circuit pack-level maintenance is covered by DIG-BD whose strategy is described in the XXX-BD section of this chapter. The following circuit packs support digital lines:

Digital Line Circuit Packs

Code	Ports	Type	Companding	Endpoints
TN413	8	4-wire DCP	A-law	7400 series digital voice terminals, attendant consoles, 510D personal terminals, MT515 BCTs, DCP data modules
TN754	8	4-wire DCP	mu-law	
TN754B	8	4-wire DCP	A-law/mu-law	
TN2181	16	2-wire IDCP	A-law/mu-law	
TN2136	8	4-Wire DCP		Data Adaptors (DA), Italtel Digital Telephone Models 1 and 2 (IDT1/2)
TN2177	16	2-wire IDCP	A-law/mu-law	
TN2181	16	2-wire IDCP	A-law/mu-law	

G3r V1 systems support only TN754 and TN754B. TN413 and TN754 are found only in upgraded cabinets.

Each digital line port supports two 64 kbps information channels (primary and secondary) and one 8kbps signaling channel. Digital voice terminals always use the primary information channel. Thus only one voice terminal can be connected to each port. The secondary information channel can be used to connect a data terminal via a Digital Terminal Data Module (DTDM) or a Data Adaptor (DA). All other devices currently supported by Digital Line circuit packs communicate on the primary information channel. Figure 9-18 on page D-62 shows examples of digital line connectivity.

Only the TN754B or TN2136 should be used in out-of-building applications. For important information pertaining to protection required for out-of-building digital

voice terminals, see *DEFINITY Communications System Generic 1 and Generic 3 Installation and Test,* 555-230-104.

Only 2-wire Italtel Digital Telephone Models 1 and 2 (IDT1/2) or DAs can be directly connected to a TN2136 AT&T DCP (4-wire) digital voice terminals and data modules can be connected to these circuit packs via Italtel's 2/4-wire adapter. DAs can operate in either of two modes which are covered by different maintenance objects:

DA Mode	Administered as:	Endpoint	Maintenance Object
Stand-alone	PDM	Data endpoint only	PDMODULE
Linked	DTDM	IDT1/2 and optional data terminal	DIG-LINE

Digital Line maintenance interacts with Digital Line circuit pack (DIG-BD) maintenance, and results of DIG-LINE testing can be affected by the health of the Digital Line circuit pack. Keep this in mind when investigating reported Digital Line problems.

The following service states apply to digital line stations:

Out-of-Service	The port, and thus the station, have been removed from service. Busyouts put the port in the out-of-service state.
Ready-for-Service	The port on the circuit pack has been put into service, but the voice terminal has not yet established signaling communications with the port.
In-Service	The voice terminal has established signaling communications with the port, and the system is ready to process calls to and from that station. A terminal in the ready-for-service state will progress to the in-service state if it is functioning normally. It can also be forced into the in-service state by going off-hook.

Downloading of Terminal Parameters

Programmable Terminals

The following information is presented as background information to help understand how maintenance software interacts with terminal parameter downloading.

Terminal Types:

The following terminals can be downloaded for Definity G3V3:

a. 84xx multibutton digital voice terminals (8403D01A, 8410B, 8410D02A, 8434D01A) with optional expansion module.

b. 603A1 and 603D1 Callmaster terminals for telemarketing applications.

c. 302B1 attendant console.

Circuit Packs:

1. 8400x, 302B1 Terminals
   a. TN754 (4-wire, Mu-law)

      Minimum usable vintage for 8410D and 8434D terminals - V11

   b. TN413 (4-wire, A-law)
   c. TN754B (4-wire, A-law/Mu-law selectable)
   d. TN2177 (2-wire, 16-port, A-law/Mu-law selectable)
   e. TN2181 (2-wire, 16-port, A-law/Mu-law selectable)
2. 603A1/D1 Terminals
   a. TN754 (4-wire, Mu-law),
   b. TN413 (4-wire, A-law)
   c. TN754B (4-wire, A-law/Mu-law selectable)

Downloadable Terminal Parameters

The following parameters are downloaded to programmable terminals:

DOWNLOADABLE PARAMETERS

Parameter	Scope	Terminal
International Flags (A-law/Mu-law, Display Mode, DLI Voltage level)	System level	84xx, 603x, 302B1
Primary Levels (Transmission & Sidetone)	System level	84xx, 603x, 302B1
Adjunct Levels (Transmission & Sidetone)	System level	84xx
Handset Expander Option	System level	84xx
Administrable Options (Speakerphone & Mute Button)	Per-terminal	84xx
Administrable Softkeys	Per-terminal, System level	8410D, 8434D

Nonvolatile Memory

Nonvolatile memory is used to store downloadable parameters in programmable terminals. Therefore, once the terminal has been downloaded, it is not be necessary to download it again, even if power is removed from the terminal.

If the nonvolatile memory fails with power still present, the terminal will revert to its default factory settings except for its A-law/Mu-law companding settings which are stored in RAM. If power is removed after the nonvolatile memory fails, the terminal will revert to its factory default settings.

Mu-law companding is assigned as a default setting at the factory, so, for domestic use, a programmable terminal can place calls even though it has not been downloaded from the PBX.

Download Actions

There are several different scenarios which will cause a terminal to be downloaded. As described below, these can occur as part of background maintenance activity or on demand from the System Access Terminal or from a station.

For the background actions described below, the terminal will be downloaded automatically if a download retry flag for the terminal is set in software. This flag is set at the time translation is loaded at boot time, when translation which affects the parameters of a terminal is changed as part of system administration actions, and when a port is inserted in software as a result of board insertion or translation change.

Automatic Download Actions

1. System Reboot/Restart

   A global download action is started when periodic maintenance tests start after a system reboot/restart regardless of whether the parameters have been downloaded previously.

2. Periodic Tests

   If the download flag is still set when periodic tests are run on a terminal, a download action will occur. This operation is required in case a terminal could not be downloaded previously because it was off-hook at the time the system first booted or because the terminal was off-hook at the time translation associated with downloadable parameters was changed.

   Note that it may take more than an hour for periodic tests to reach the terminal that needs to be downloaded.

3. Terminal Administration

   A downloadable terminal is automatically downloaded when translation changes associated with downloadable parameters are made as part of system administration. As shown in the table above, these changes can

be for a specified terminal or may be system-wide. If the change is for system-level parameter, a background global update request is made to download all programmable terminals.

This global update may take more than an hour for a system with several thousand programmable terminals.

4. Port Insertion

   Whenever maintenance software initiates a request to place a port into service, a terminal download action is started on that terminal if that terminal is programmable. This port insertion action occurs under the following circumstances:

   a. A digital line circuit pack that is physically inserted into the system has ports currently administered for programmable terminals.

      If more than 20 port insertion requests are received within a few seconds, a global download request is started up as a background task. This action updates all programmable terminals instead of just those being inserted. This is done to avoid system overload for situations where there is massive board insertion. This could occur when connectivity to an EPN is reestablished after that EPN was down.

   b. A station port is added to the system by a "**add station**" or "**change station**" command.

   c. A TTI port is activated.

5. Audits

   As part of periodic maintenance, the hardware status audit test queries programmable terminals to determine which levels and/or options are being used. If the reported values are not equal to the administered values, the system will initiate a terminal download action. This audit does NOT check the parameters used for softkeys.

6. Activation of TTI

   A terminal is downloaded automatically when it is activated using the Terminal Translation Initialization feature. Therefore, no special user actions are required for TTI.

   NOTE:
   Plugging the station cord into a terminal does not automatically cause the terminal to be downloaded. If this terminal has factory defaults or if the terminal has been previously downloaded with parameters different than those desired, use one of the demand download actions described below to download the terminal.

Demand Download Actions

1. Busyout/Release Command

A maintenance demand busyout/release request for a station will cause the terminal to be downloaded regardless of its previous download status.

2. Feature Access Code

   A Refresh Terminal Parameters Feature Access Code can be used to request a terminal download action. When this code is followed by a '#', the programmable parameters for the current terminal are downloaded when the terminal goes on hook. When this code is followed by an extension, the programmable parameters for the specified station are downloaded.

   This Refresh Terminal Parameters Feature Access Code is assigned on the second page of the "feature-access-codes" screen.

   A confirmation is returned if the download request is accepted. A busy tone is returned if the request is made from a different station when the target station is off-hook.

   The first three green call appearance LEDs on the 84xx 603x terminal will be turned on for three seconds if the station was successfully downloaded as a result of an entry of a Refresh Terminal Parameters Facility Access Code. This is not true for the 302B1 terminal.

   There is no visible display on a station for the other background or demand download actions. As described below, the "status station" and "status attendant" screens can be used to check the download status of a specified terminal.

Status of Parameter Downloads

The "status station" and "status attendant" screens display the current download status of individual 84xx, 603, and 301B1 terminals in the Download Status field. The possible download states are:

Download Status

Status	Terminal Down Load State
Complete	Terminal successfully downloaded sometime in the past.
Pending	System waiting to download the terminal. This may require the execution of a background periodic test which could take more than an hour. A demand download as described above may also be used to initiate an immediate download.
Not Applicable	Not a programmable terminal.

Possible reasons for the terminal not being downloaded include:

— Terminal is off-hook.

— Terminal detected a bad checksum.

— Terminal detected a bad or missing EEPROM (refer to hardware error log).

— Terminal is busy programming data from a previous PROGRAM message.

— Terminal is in the Programming Disabled state.

— Terminal is in the Local Program Options Mode.

— Terminal is disconnected or out of service (use **status station** command).

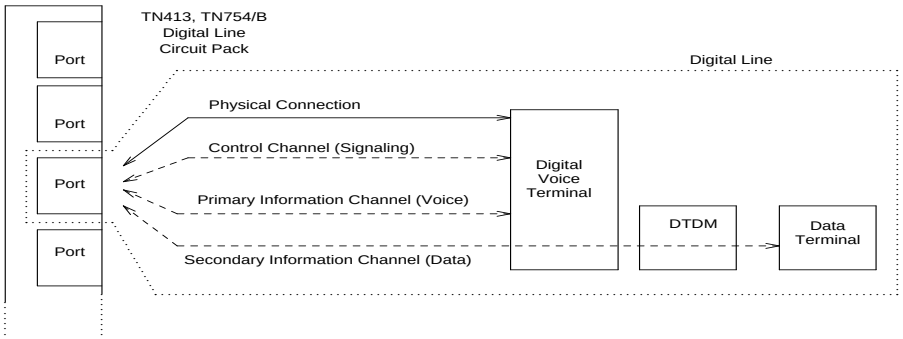

Figure 9-18. Digital Line Connectivity

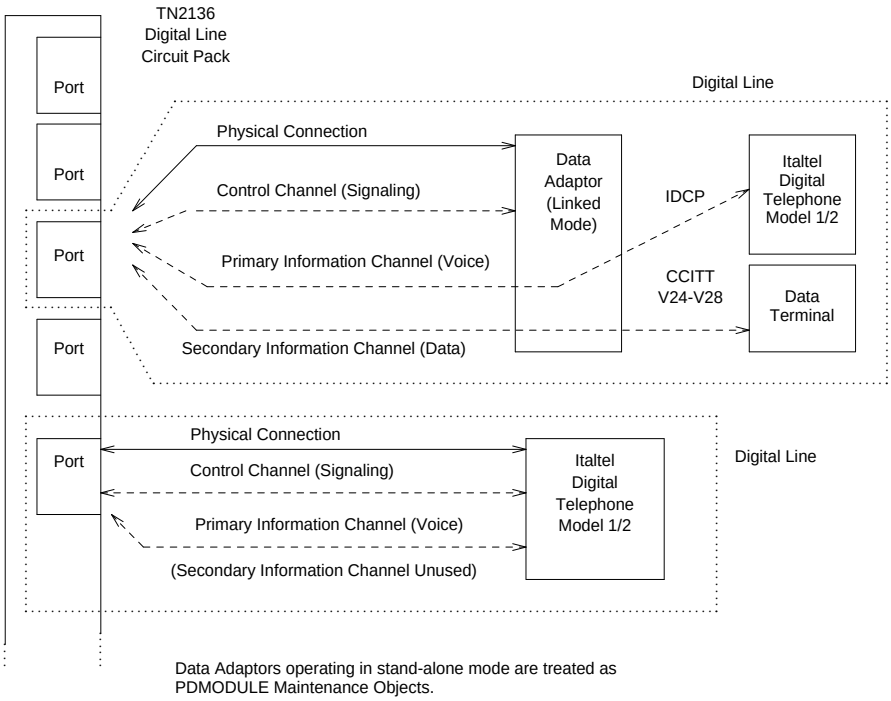

Figure 9-19. Digital Line Connectivity

Hardware Error Log Entries and Test to Clear Values

Digital Line Error Log Entries					
Error Type	**Aux Data**	**Associated Test**	**Alarm Level**	**On/Off Board**	**Test to Clear Value**
0*	0	Any	Any	Any	test port *UUCSSpp* sh r 1
1 (a)	40987	None	WARNING	OFF	
1 (b)	1 to 20	None	WARNING	OFF	
18 (c)	0	busyout port *UUCSSpp*	WARNING	OFF	rel port *UUCSSpp*
130 (d)		None	WARNING	ON	test port *UUCSSpp* sh
257 (e)	40971	None			
513	0	Station (Digital) Audits Test (#17)	WARNING(o)	OFF	test port *UUCSSpp* sh r 6
767 (f)	40964	None	WARNING	OFF	
769 (g)	40963 40988	None	WARNING	OFF	
1025(o)		NONE	WARNING	OFF	
1281	Any	Station (Digital) Audits Test (#17)	WARNING	OFF	test port *UUCSSpp* sh r 4
1537 (h)	40968	None	WARNING	OFF	
1793		Voice & Ctrl. Local Loop Test (#13)	MINOR/ WARNING†	ON	test port *UUCSSpp* l r 3
2049		NPE Crosstalk Test (#9)	MINOR/ WARNING†	ON	test port *UUCSSpp* l r 3
2304 (n)		None			
2305 (i)	32770	None			
2305 (h)	40967	None			
3840 (k)	40965	None			
3840 (l)	40989	None			
3841 (m)	41029	None			

* Run the Short Test Sequence first. If all tests pass, run the Long Test Sequence. Refer to the appropriate test description and follow the recommended procedures.

† Major alarms on this MO may be downgraded to Warning alarms based on the value used in the set options command.

Notes:

a. Could experience a noisy port or link. This is an off-board problem detected by the port circuit. Check for defective wiring, a defective voice terminal, or move voice terminal closer to the switch (in terms of feet of wire from the jack to the switch). If the problem still exists, replace the circuit pack. Once the problem has been resolved, the alarm will be retired after a predetermined amount of time.

b. This Error Type and Aux Data will occur when at least 15 off-board problems have been detected with the link to the terminal. When an error with the link is detected, an on-board counter is incremented.

   The user could experience a noisy port or link. This is an off-board problem detected by the port circuit. Check for defective wiring, a defective voice terminal, or move voice terminal closer to the switch (in terms of feet of wire from the jack to the switch). If the problem still exists, replace the circuit pack. Once the problem has been resolved, the alarm will be retired after a predetermined amount of time.

c. This error type is logged when the port in question is busied out by maintenance personnel. Make sure port is released from busyout via the **release port UUCSS pp** command.

d. This error type indicates that the circuit pack has been removed or has been insane for more than 21 minutes. To clear the error, reinsert or replace the circuit pack.

e. Problems transmitting to the voice terminal. This problem can be caused by defective wiring. Defective wiring can cause varying degrees of problems on different types of sets. Sets such as the 7410 appear to be more susceptible to wiring problems than other sets. This is usually an on-board problem and can be ignored if no user complaints are received.

f. This is an in-line event that produces this error type when a favorable response is received from running the Digital Line Electronic Power Feed Test (#11). No craft action is necessary. This alarm will be resolved with the passing of time.

g. With Aux Data 40963, this error type is a result of an unfavorable response to the Electronic Power Feed/ Positive Temperature Coefficient Test (#11). With Aux Data 40988, this error type indicates that the EPF/PTC circuit has been turned off due to an overcurrent condition.

For TN754 vintage 13 or earlier and TN413, the EPF circuit senses an overcurrent condition at the voice terminal. Check for a short in the wiring, a damaged jack, an incorrect type of voice terminal, or a defective voice terminal.

For TN754 vintage 14 or later, TN754B and TN2136, the PTC will open if there is a short on the power line for 1/2 second or longer. The voice terminal is probably not operating properly. Unplug the voice terminal for 30 seconds and then plug it back in. If the voice terminal still does not operate, then check for a short in the wiring, a damaged jack, an incorrect type of voice terminal, or a defective voice terminal.

Once the problem has been resolved, it may take up to 1 hour for the alarm to clear due to ‘‘leaky bucket’’ strategy. If the problem cannot be resolved by one of the steps above, then replace the circuit pack.

h. An in-line maintenance error has generated an off-board warning due to some problem with the link to the voice terminal. This can be ignored if no user complaints are received. Otherwise, make sure the voice terminal is connected, check for defective wiring, check for a defective voice terminal, and move voice terminal to a jack that is closer to the switch (in terms of feet of wiring between the jack and the switch). If the problem still exists, replace the circuit pack. Once the problem has been resolved, the alarm will be retired after a predetermined amount of time.

i. This indicates that the station went off-hook while it was in the ready-for-service state. Use the **status station** command to determine the state of the station. The off-hook should have moved the station to ready-for-service. No craft action is necessary.

j. This is the code that is generated when the link between the circuit pack and the voice terminal is successfully reset. No craft action is necessary.

k. No terminal is connected to the Digital Line board. No maintenance action is required.

l. An uplink message has been logged indicating that the Electric Power Feed (EPF) is on with no load on it. No action is necessary.

m. The circuit pack’s message buffer is full. This may be caused by having many display phones with heavy traffic connected to the circuit pack. No action is necessary.

n. Internal system error. No action is necessary.

o. There is a problem with the voice terminal EEPROM. When the voice terminal is repaired the alarm will be resolved with the passing of time.

System Technician-Demanded Tests: Descriptions and Error Codes

Always investigate tests in the order presented in the table below when inspecting errors in the system. By clearing error codes associated with the *Voice and Control Channel Local Loop Around Test,* for example, you may also clear errors generated from other tests in the testing sequence.

Order of Investigation	Short Test Sequence	Long Test Sequence	D/ND*
Digital Terminal Remote Loop Around Test (#1201)		X	D
Voice and Control Channel Local Loop Around Test (#13)		X	ND
Digital Line NPE Crosstalk Test (#9)		X	ND
Digital Line Electronic Power Feed Test (#11)		X	ND
DIG-LINE Station Lamp Updates Test (#16)	X	X	ND
Station (Digital) Audits Test (#17)	X	X	ND

* D = Destructive; ND = Nondestructive

Digital Terminal Remote Loop Around Test (#1201)

This test checks the integrity of the connection between the SPE and the attached Digital Terminal and the ability of the terminal and the associated port to send and receive data.

A request is presented to the terminal to go into loop back mode. Then data is sent to the terminal and when received back, checked for consistency. This test is run as a part of the craft command "test long" procedure. It is not included in any error recovery strategy and generates no Error Log entries or alarms. To begin the test, busy out the end point or port. This test will succeed if the endpoint is "idle". If the reserve request fails then the test will abort. If the request succeeds then the SPE sends a message to loop around both information channels for the digital terminal. First the primary information (voice, Information Channel 1 or I1) channel loop back test is run. The test is performed by sending a digital count from the Tone/Clock circuit pack on the primary information channel time slot and receiving the same digital count with a general purpose tone detector.

If the primary information channel test is successful, the loop around test for the secondary information (data, Information Channel 2 or I2) channel is then performed. This test is the same as the primary information channel loop around test and is performed only if a DTDM is administered, which is also the case for a linked DA.

Only one value (Pass. Fail, or Abort) is generated as a result of the two tests run. If any test fails aborts, the sequence is stopped. Upon completion of this test the associated endpoint and port are moved back into the previous service state.

Table 9-92. TEST #1201 Digital Terminal Remote Loop Around Test

Error Code	Test Result	Description/ Recommendation
	ABORT	Internal System Error 1. Retry the command at 1-minute intervals a maximum of 5 times. 2. If the test continues to abort, escalate the problem.

Continued on next page

Table 9-92. TEST #1201 Digital Terminal Remote Loop Around Test — *Continued*

Error Code	Test Result	Description/ Recommendation
1000	ABORT	System resources required to run this test are not available. The port may be busy with a valid call. Use the **display port**UUCSSpp command to determine the station extension or attendant number of the port. Use **status station** or **status attendant** to determine the service state of the port. If the service state indicates that the port is in use, then the port is unavailable for certain test. (SeeChapter 8, "Maintenance Commands" for a full description of all possible states.) You must wait until the port is idle before re-testing. Attendants are always in use (off-hook) if the handset is plugged in and the port is not busied out. 1. If the port status is idle, then retry the command at 1-minute intervals a maximum of 5 times. 2. If the test continues to abort, escalate the problem.
1001	ABORT	System resources required to run this test are not available. 1. If the port status is idle, then retry the command at 1-minute intervals a maximum of 5 times. 2. If the test continues to abort, escalate the problem.
1002	ABORT	The system could not allocate time slots for the test. The system may be under heavy traffic conditions or it may have time slots out-of-service due to TDM-BUS errors. Refer to TDM-BUS (TDM-Bus) Maintenance to diagnose any active TDM-BUS errors. 1. If the system has no TDM-BUS errors and is not handling heavy traffic, repeat test at 1-minute intervals a maximum of 5 times. 2. If the test continues to abort, escalate the problem.

Continued on next page

Table 9-92. TEST #1201 Digital Terminal Remote Loop Around Test — *Continued*

Error Code	Test Result	Description/ Recommendation
1003	ABORT	The system could not allocate a tone receiver for the test. The system may be oversized for the number of Tone Detectors present or some Tone Detectors may be out of service. 1. Look for TTR-LEV errors in the Error Log. If present refer to TTR-LEV (TTR-Level) Maintenance documentation. 2. Look for TONE-PT errors in the Error Log. If present, refer to TONE-PT (Tone Generator) Maintenance documentation. 3. If neither condition exist, retry the command at 1-minute intervals a maximum of 5 times. 4. If the test continues to abort, escalate the problem.
1004	ABORT	The port was seized by a valid call during the test. The test has been aborted. Use the **display port**UUCSSpp command to determine the station extension or attendant number of the port. Use **status station** or **status attendant** to determine the service state of the port. If the service state indicates that the port is in use, then the port is unavailable for certain test. (See Chapter 8, "Maintenance Commands", for a full description of all possible states.) You must wait until the port is idle before resetting. Attendants are always in use (off-hook) if the handset is plugged in and the port is not busied out. 1. Retry the command at 1-minute intervals a maximum of 5 times. 2. If the test continues to abort and the port is not in use, escalate the problem.
1005	ABORT	The installed circuit pack does not support this operation.

Continued on next page

Table 9-92. TEST #1201 Digital Terminal Remote Loop Around Test — *Continued*

Error Code	Test Result	Description/ Recommendation
2000	ABORT	Response to the test request was not received within the allowable time period. 1. Retry the command at 1-minute intervals a maximum of 5 times. 2. If the test continues to abort, escalate the problem.
2100	ABORT	System resources required to run this test are not available. 1. Make sure terminal is connected and repeat test. 2. If the test continues to abort, escalate the problem. 3. If test fails replace terminal and repeat test. 4. Retry the command at 1-minute intervals a maximum of 5 times.
14	FAIL	The primary channel (voice, Information Channel 1 or I1) is not operating properly. User impact may range from noticing nothing to not being able to use the port. Check the results of "Voice and Control Channel Local Loop Test (#13). If that test fails, suspect the Digital Line circuit pack. If that test passes then replace the terminal. If both test fail, and component replacement does not change the results, then: 1. Run circuit pack tests to check the tone generator circuit pack and the Tone Detector circuit pack using the **test board** UUCSS s command. 2. Resolve any problems that are detected on the Tone Generator circuit pack or Tone Detector circuit pack. 3. If the Tone Generator and Tone Detector circuit pack are functioning properly, and the tests still fail, escalate the problem. (*(Continued)*
1015	ABORT	The system will not allow this test to be run because the station is/has not been busied out. Busy out the station with the /E3busyout station/E1 command.

Continued on next page

Table 9-92. TEST #1201 Digital Terminal Remote Loop Around Test — *Continued*

Error Code	Test Result	Description/ Recommendation
16	FAIL	The secondary channel (data Information Channel 2 or I2 is not operating properly. User impact may range from noticing nothing to not being able to use this terminal. Check the results of "Voice and Control Channel Local Loop Test (#13). If that test fails, suspect the Digital Line circuit pack. If that test passes then replace the terminal. If both test fail, and component replacement does not change the results, then: 1. Run circuit pack tests to check the tone generator circuit pack and the Tone Detector circuit pack using the **test board** UUCSS s command. 2. Resolve any problems that are detected on the Tone Generator circuit pack or Tone Detector circuit pack. 3. If the Tone Generator and Tone Detector circuit pack are functioning properly, and the tests still fail, escalate the problem.
	PASS	Voice and Control Channel Local Loop test passed. All channels are transmitting properly. 1. To be sure that this is not an intermittent problem, repeat this test up to a maximum of ten times to make sure it continues to pass. 2. If complaints persist (noisy connections for voice. corrupted data transfer for data), examine the station, connections, and wiring.

Digital Line NPE Crosstalk Test (#9)

One or more Network Processing Elements (NPEs) reside on each circuit pack with a TDM Bus interface. The NPE controls port connectivity and gain, and provides conferencing functions on a per-port basis. The NPE Crosstalk Test verifies that this port's NPE channel talks on the selected time slot and never crosses over to time slots reserved for other connections. If the NPE is not working correctly, one-way and noisy connections may be observed. This test is part of a port's Long Test Sequence and takes about 20 to 30 seconds to complete. Crosstalk testing is performed on both the primary information channel (voice) and the secondary information channel (data) associated with each digital station port. If this test fails on either channel, the station and the DTDM are taken out-of-service.

Table 9-93. TEST #9 Digital Line NPE Crosstalk Test

Error Code	Test Result	Description/ Recommendation
1	ABORT	During testing of the primary information channel, system resources may not have been available. Also, the port may have been busy during the test. 1. Check the port status. Use the **display port** UUCSSpp command to determine the station extension of the port. Use the **status station** command to determine the service state of the port. If the service state indicates that the port is in use, then the port is unavailable for this test. You will have to wait until the port is idle. 2. If the port status is idle, then retry the command a 1-minute intervals a maximum of 5 times. 3. If the test continues to abort, escalate the problem.
2	ABORT	During testing of DTDM, system resources may not have been available. Also, the port may have been busy during the test. 1. Check if port is being used. If possible, disconnect by toggling disconnect button on DTDM. Retry command after 1 minute. **WARNING:** *This action will drop the call in progress.* 2. If the test continues to abort after 5 attempts, escalate the problem.

Continued on next page

Table 9-93. TEST #9 Digital Line NPE Crosstalk Test — *Continued*

Error Code	Test Result	Description/ Recommendation
1000	ABORT	System resources required to run this test are not available. The port may be busy with a valid call. Use **display port** UUCSSpp to determine the station extension or attendant number of the port. Use **status station** or **status attendant** to determine the service state of the port. If the service state indicates that the port is in use, then the port is unavailable for certain tests. (See Chapter 8, "Maintenance Commands", for a full description of all possible states.) You must wait until the port is idle before retesting. Attendants are always in use (off-hook) if the handset is plugged in and the port is not busied out. 1. If the port status is idle, then retry the command at 1-minute intervals a maximum of 5 times. 2. If the test continues to abort, escalate the problem.
1001	ABORT	System resources required to run this test are not available. 1. Retry the command at 1-minute intervals a maximum of 5 times. 2. If the test continues to abort, escalate the problem.
1002	ABORT	The system could not allocate time slots for the test. The system may be under heavy traffic conditions or it may have time slots out-of-service due to TDM-BUS errors. Refer to TDM-BUS (TDM Bus) Maintenance to diagnose any active TDM-BUS errors. 1. If system has no TDM-BUS errors and is not handling heavy traffic, repeat test at 1-minute intervals a maximum of 5 times. 2. If the test continues to abort, escalate the problem.

Continued on next page

Table 9-93. TEST #9 Digital Line NPE Crosstalk Test — *Continued*

Error Code	Test Result	Description/ Recommendation
1003	ABORT	The system could not allocate a tone receiver for the test. The system may be oversized for the number of Tone Detectors present or some Tone Detectors may be out-of-service. 1. Look for TTR-LEV errors in the Error Log. If present, refer to TTR (TTR Level) Maintenance documentation. 2. Look for TONE-PT errors in the Error Log. If present, refer to TONE-PT (Tone Generator) Maintenance documentation. 3. If neither condition exists, retry the command at 1-minute intervals a maximum of 5 times. 4. If the test continues to abort, escalate the problem.
1004	ABORT	The port was seized by a valid call during the test. The test has been aborted. Use **display port** UUCSSpp to determine the station extension or attendant number of the port. Use **status station** or **status attendant** to determine the service state of the port. If the service state indicates that the port is in use, then the port is unavailable for certain tests. (See Chapter 8, "Maintenance Commands", for a full description of all possible states.) You must wait until the port is idle before retesting. Attendants are always in use (off-hook) if the handset is plugged in and the port is not busied out.
1020	ABORT	Test disabled via background testing. Use **status station** command to determine when station is available for testing.
2000	ABORT	Response to the test request was not received within the allowable time period. 1. Retry the command at 1-minute intervals a maximum of 5 times. 2. If the test continues to abort, escalate the problem.

Continued on next page

Table 9-93. TEST #9 Digital Line NPE Crosstalk Test — *Continued*

Error Code	Test Result	Description/ Recommendation
1 2	FAIL	The Network Processing Element (NPE) of the tested port was found to be transmitting in error. This will cause noisy and unreliable connections. Failure code 1 indicates that the Crosstalk test failed on the primary channel. Failure code 2 indicates that the Crosstalk test failed on the secondary channel. 1. Replace circuit pack.
	PASS	The port is correctly using its allocated time slots. 1. To be sure that this is not an intermittent problem, repeat this test up to a maximum of 10 times to make sure it continues to pass. 2. If complaints persist, examine the station, connections, and wiring.

Digital Line Electronic Power Feed/Positive Temperature Coefficient Test (#11)

For TN413, and TN754 vintage 13 or earlier, this is an Electronic Power Feed (EPF) restoral test. In this test, the processor requests that the EPF be turned on for a given port, and an attempt is made to turn on the power supply to the station. If no current is drawn, the station is probably not connected. If an overcurrent condition is sensed, there may be a short in the loop. A message is returned reporting that either the EPF was successfully turned on, or that an overcurrent condition was sensed. This test is repeated again 5 seconds later.

For TN754 vintage 14 or later, TN754B and TN2136, this is a Positive Temperature Coefficient (PTC) restoral test. In this test, the processor requests that the PTC be turned on for a given port, and an attempt is made to turn on the power supply to the station. If an overcurrent condition is sensed, there is probably a short on the power line that causing the PTC to open and disconnect the voice terminal. Since the PTC does not have self-restoral capability, the voice terminal must be manually unplugged for 30 seconds and then plugged back in to restore the PTC. A message is returned reporting that either the PTC was successfully turned on successfully with no problem or an overcurrent condition was sensed. This test is repeated again 5 seconds later.

Table 9-94. TEST #11 Digital Line Electronic Power Feed Test

Error Code	Test Result	Description/ Recommendation
	ABORT	Internal System Error 1. Retry the command at 1-minute intervals a maximum of 5 times. 2. If the test continues to abort, escalate the problem.

Continued on next page

Table 9-94. TEST #11 Digital Line Electronic Power Feed Test — *Continued*

Error Code	Test Result	Description/ Recommendation
1000	ABORT	System resources required to run this test are not available. The port may be busy with a valid call. Use **display port** UUCSSpp to determine the station extension or attendant number of the port. Use **status station** or **status attendant** to determine the service state of the port. If the service state indicates that the port is in use, then the port is unavailable for certain tests. (See Chapter 8, "Maintenance Commands", for a full description of all possible states.) You must wait until the port is idle before retesting. Attendants are always in use (off-hook) if the handset is plugged in and the port is not busied out. 1. If the port status is idle, then retry the command at 1-minute intervals a maximum of 5 times. 2. If the test continues to abort, escalate the problem.
	FAIL	Internal System Error 1. Retry the command at 1-minute intervals a maximum of 5 times. 2. If the test continues to abort, escalate the problem.

Continued on next page

Table 9-94. TEST #11 Digital Line Electronic Power Feed Test — *Continued*

Error Code	Test Result	Description/ Recommendation
	PASS	Electronic Power Feed Test passed. The message to turn on the power to the station was successfully sent to the port. 1. Although this test will never actually return a FAIL result except for the **Internal System Error** described above, it will log an error indicating the real results of the test. Check the Error Log for any entries with Error Types 767 or 769 after the test completes. 2. If Error Type 767 appears in the Error Log, this should indicate that the test sensed no problems with the power to the station. To verify that the station is powered up correctly, run a self-test on the station, if available, and check that all the feature buttons are operating. 3. If Error Type 769 appears in the Error Log, this indicates some problem with the power to the station. Check for a short in the wiring, a damaged jack, a defective voice terminal, or an incorrect type of terminal.

Voice and Control Channel Local Loop Test (#13)

These tests check the information and control channels between the Switch Processing Element (SPE) and the Digital Line port circuit. The SPE sends a message to loop around both the information and control channels for the port. First, the primary information (voice) channel loop back test is run. The test is performed by sending a digital count from the Tone-Clock circuit pack on the primary information channel time slot and receiving the same digital count with a general purpose Tone Detector.

While the primary information channel is still looped around, the Control Channel Loop Around Test is performed. This test consists of sending four different transparent patterns to the on-board microprocessor, receiving them back, and comparing them.

The Loop Around Test for the secondary information (data) channel is then performed. This test is the same as the primary information channel loop around test and is performed only if a DTDM is administered.

A Conference Test is done next for the primary information channel. This test is the same as Conference Test #6.

Only one value (Pass, Fail, or Abort) is generated as a result of four tests run. If any test fails or aborts, the sequence is stopped.

Table 9-95. TEST #13 Voice and Control Channel Local Loop Test

Error Code	Test Result	Description/ Recommendation
	ABORT	Internal System Error 1. Retry the command at 1-minute intervals a maximum of 5 times. 2. If the test continues to abort, escalate the problem.

Continued on next page

Table 9-95. TEST #13 Voice and Control Channel Local Loop Test — *Continued*

Error Code	Test Result	Description/ Recommendation
1000	ABORT	System resources required to run this test are not available. The port may be busy with a valid call. Use **display port** UUCSSpp to determine the station extension or attendant number of the port. Use **status station** or **status attendant** to determine the service state of the port. If the service state indicates that the port is in use, then the port is unavailable for certain tests. (See Chapter 8, "Maintenance Commands", for a full description of all possible states.) You must wait until the port is idle before retesting. Attendants are always in use (off-hook) if the handset is plugged in and the port is not busied out. 1. If the port status is idle, then retry the command at 1-minute intervals a maximum of 5 times. 2. If the test continues to abort, escalate the problem.
1001	ABORT	System resources required to run this test are not available. 1. Retry the command at 1-minute intervals a maximum of 5 times. 2. If the test continues to abort, escalate the problem.
1002	ABORT	The system could not allocate time slots for the test. The system may be under heavy traffic conditions or it may have time slots out-of-service due to TDM-BUS errors. Refer to TDM-BUS (TDM Bus) Maintenance to diagnose any active TDM-BUS errors. 1. If system has no TDM-BUS errors and is not handling heavy traffic, repeat test at 1-minute intervals a maximum of 5 times. 2. If the test continues to abort, escalate the problem.

Continued on next page

Table 9-95. TEST #13 Voice and Control Channel Local Loop Test — *Continued*

Error Code	Test Result	Description/ Recommendation
1003	ABORT	The system could not allocate a tone receiver for the test. The system may be oversized for the number of Tone Detectors present or some Tone Detectors may be out-of-service. 1. Look for TTR-LEV errors in the Error Log. If present, refer to TTR-LEV (TTR Level) Maintenance documentation. 2. Look for TONE-PT errors in the Error Log. If present, refer to TONE-PT (Tone Generator) Maintenance documentation. 3. If neither condition exists, retry the command at 1-minute intervals a maximum of 5 times. 4. If the test continues to abort, escalate the problem.
1004	ABORT	The port was seized by a valid call during the test. The test has been aborted. Use **display port** UUCSSpp to determine the station extension or attendant number of the port. Use **status station** or **status attendant** to determine the service state of the port. If the service state indicates that the port is in use, then the port is unavailable for certain tests. (See Chapter 8, "Maintenance Commands", for a full description of all possible states.) You must wait until the port is idle before retesting. Attendants are always in use (off-hook) if the handset is plugged in and the port is not busied out. 1. Retry the command at 1-minute intervals a maximum of 5 times. 2. If the test continues to abort and the port is not in use, escalate the problem.

Continued on next page

Table 9-95. TEST #13 Voice and Control Channel Local Loop Test — *Continued*

Error Code	Test Result	Description/ Recommendation
2000	ABORT	Response to the test request was not received within the allowable time period. 1. Retry the command at 1-minute intervals a maximum of 5 times. 2. If the test continues to abort, escalate the problem.
2100	ABORT	System resources required to run this test are not available. 1. Rerun the test at 1-minute intervals a maximum of 5 times. 2. If the test continues to abort, escalate the problem.
7	FAIL	Conference Test failed on primary channel. In some cases, users may not notice disruption in service. In extreme cases, conferencing feature may not work at all.
14	FAIL	The primary voice channel is not transmitting properly. User impact may range from noticing nothing to not being able to use this port.
15	FAIL	The control channel between the processor and digital circuit pack is not transmitting properly. User impact may range from noticing nothing to not being able to use the port. Could also be disruptive to other users.
16	FAIL	The secondary voice channel is not transmitting properly. User impact may range from noticing nothing to not being able to use this port. 1. Run circuit pack tests to check the Tone Generator circuit pack and the Tone Detector circuit pack using the **test board UUCSS s** command. 2. Resolve any problems that are detected on the Tone Generator circuit pack or Tone Detector circuit pack. 3. If the Tone Generator and Tone Detector circuit packs are functioning properly, and the test still fails, replace the Digital Line circuit pack.

Continued on next page

Table 9-95. TEST #13 Voice and Control Channel Local Loop Test — *Continued*

Error Code	Test Result	Description/ Recommendation
	PASS	Voice and Control Channel Local Loop test passed. All channels are transmitting properly. 1. To be sure that this is not an intermittent problem, repeat this test up to a maximum of 10 times to make sure it continues to pass. 2. If complaints persist (noisy connections for voice, corrupted data for data transfer), examine the station, connections, and wiring.

DIG-LINE Station Lamp Updates Test (#16)

This test lights all lamps on the terminal as specified. The lamp updates will run only if the station is in-service. The status of the station is checked and the lamp updates are blocked from taking place if the station is not in the in-service state. This test does not affect the status of the Message Waiting lamp.

Table 9-96. TEST #16 DIG-LINE Station Lamp Updates Test

Error Code	Test Result	Description/ Recommendation
	ABORT	Internal System Error 1. Retry the command at 1-minute intervals a maximum of 5 times. 2. If the test continues to abort, escalate the problem.
1	ABORT	This port may have been busied out by system technician. 1. Look in the Error Log for Error Type 18 (port busied out) for this port. If this error type is present, then release the port via the **release station <extension>** command and run the test again. 2. Make sure that the terminal is connected. 3. Retry the command at 1-minute intervals a maximum of 5 times. 4. If the test continues to abort, escalate the problem.
3	ABORT	Station may be in ready-for-service or out-of-service state. 1. Use **status station** command to verify state of station. 2. Make sure the terminal is connected. 3. Retry the command at 1-minute intervals a maximum of 5 times. 4. If the test continues to abort, escalate the problem.

Continued on next page

Table 9-96. TEST #16 DIG-LINE Station Lamp Updates Test — *Continued*

Error Code	Test Result	Description/ Recommendation
1000	ABORT	System resources required to run this test are not available. The port may be busy with a valid call. Use **display port** UUCSSpp to determine the station extension or attendant number of the port. Use **status station** or **status attendant** to determine the service state of the port. If the service state indicates that the port is in use, then the port is unavailable for certain tests. (See Chapter 8, "Maintenance Commands", for a full description of all possible states.) You must wait until the port is idle before retesting. Attendants are always in use (off-hook) if the handset is plugged in and the port is not busied out. 1. If the port status is idle, then retry the command at 1-minute intervals a maximum of 5 times. 2. If the test continues to abort, escalate the problem.
1392	ABORT	This port is currently a TTI port and the test will not execute on it. 1. Verify that the port is a TTI port using either the **display port** command (the display shows that the port is a TTI port) or the **list config** command (the display shows a `t` for the port). 2. If either **list config** or **display port** indicates that the port is *not* a TTI port, escalate the problem. If both commands indicate that the port is a TTI port, the abort is correct, and no action is necessary.

Continued on next page

Table 9-96. TEST #16 DIG-LINE Station Lamp Updates Test — *Continued*

Error Code	Test Result	Description/ Recommendation
	FAIL	Internal System Error 1. Retry the command at 1-minute intervals a maximum of 5 times. 2. If the test continues to abort, escalate the problem.
	PASS	The message to light all of the station lamps was sent successfully to the port. 1. Observe the station lamps being lit when running the test. If all lamps do not light successfully, the other Digital Line test results may indicate related problems that will not allow the lamps to light. 2. Investigate by using other Digital Line port tests, and by examining the station, wiring, and connections.

Digital Station Audits Test (#17)

This is a series of six tests which are classified as audits. The SPE sends messages to the on-board microprocessor to perform the following tests:

- Switchhook Inquiry Test — This is an update of the SPE records according to the circuit pack's records. This inquiry is sent all the way to the voice terminal.
- Bad Scan Inquiry Test — A message is sent uplink which contains a count that is generated due to certain events relating to the link conditions. This can be an indication of communications problems between the Processor and Digital Port circuit pack.
- EPF/PTC Inquiry Test — For a TN413 or a TN754 vintage 13 or earlier, the status of the Electronic Power Feed (EPF) is sent uplink. Possible conditions are: EPF-on-ok, EPF-off, and EPF-no-load. For TN754 vintage 14 or later, TN754B or TN2136, the status of the Positive Temperature Coefficient (PTC) is sent uplink. Possible conditions are: PTC-on-ok, PTC-off, and PTC-no-load.
- ID Request Test — A request is made to the station for its status. The station sends its configuration information and health information back. This information is checked and a pass/fail result is provided.
- Ringer Update Test — This updates the digital telephone ringer state according to the processor records.
- DTMF Administration Update Test — This is a message to the digital station to refresh the default value which causes the station to send touch-tones only in the primary information channel. This value is set initially when the station is put in-service and every time the station's state changes from other states to in-service.

Table 9-97. TEST #17 Station (Digital) Audits Test

Error Code	Test Result	Description/ Recommendation
1	ABORT	Switchhook audit timed out.
2	ABORT	ID request fails, health bit returned from voice terminal is bad. 1. Make sure voice terminal is connected and repeat test. 2. If test fails, replace voice terminal and repeat test. 3. If the test continues to abort, escalate the problem.

Continued on next page

Table 9-97. TEST #17 Station (Digital) Audits Test — *Continued*

Error Code	Test Result	Description/ Recommendation
3	ABORT	The EPF/PTC has detected an overcurrent condition. 1. For a TN754 vintage 13 or earlier Digital Line circuit pack, issue the **test** UUCSSpp **long** command. If Test #11 passes, then the EPF/PTC condition has been cleared. Rerun the Short Test Sequence. If Test #11 does not pass, follow the repair procedures described for Test #11. 2. Look for Error Type 769 logged against DIG-LINE and follow the procedures in the associated footnote. If any additional problems are found after completion of maintenance procedures, rerun the test. 3. If the test continues to abort, escalate the problem.
4	ABORT	Internal System Error 1. Resolve any outstanding circuit pack maintenance problems. 2. Retry the command at 1-minute intervals a maximum of 5 times. 3. If the test continues to abort, escalate the problem.
5	ABORT	Ringer update aborted due to station being in ready-for-service or out-of-service state.
6	ABORT	This port may have been busied out by system technician. 1. Look in the Error Log for Error Type 18 (port busied out) for this port. If this error type is present, the release the port via the **release station** 2. Make sure that the terminal is connected. 3. Retry the command at 1-minute intervals a maximum of 5 times. 4. If the test continues to abort, escalate the problem.
1000	ABORT	System resources required to run this test are not available.

Continued on next page

Table 9-97. TEST #17 Station (Digital) Audits Test — *Continued*

Error Code	Test Result	Description/ Recommendation
1392	ABORT	This port is currently a TTI port and the test will not execute on it. 1. Verify that the port is a TTI port using either the **display port** command (the display shows that the port is a TTI port) or the **list config** command (the display shows a `t` for the port). 2. If either **list config** or **display port** indicate that the port is *not* a TTI port, escalate the problem. If both commands indicate that the port is a TTI port, the abort is correct, and no action is necessary.
2000	ABORT	Response to the test request was not received within the allowable time period.
	FAIL	Internal System Error 1. Retry the command at 1-minute intervals a maximum of 5 times. 2. If the test continues to fail, escalate the problem.
	PASS	Station Audits passed. This Digital Port circuit pack is functioning properly. 1. If complaints persist, investigate by using other port tests, and by examining the station, wiring, and connections.

DIOD-BD (DIOD Trunk Circuit Pack)

MO Name As It Appears in Alarm Log	Alarm Level	Initial System Technician Command to Run (a)	Full Name of MO
DIOD-BD*	MINOR	test port *UUCSSpp* s	DIOD Circuit Pack

a. *UU* is the universal cabinet number (1 for PPN, 2 -22 for EPNs). *C* is the carrier designation (A, B, C, D, or E). *SS* is the number of the slot in which the circuit pack resides (01 to 21). *pp* is the two digit port number (01, 02, ...).

Refer to the XXX-BD (Common Port Board) section at the end of this chapter.

DIOD-TRK (DIOD Trunk)

MO Name As It Appears in Alarm Log	Alarm Level	Initial System Technician Command to Run (a)	Full Name of MO
DIOD-TRK	MAJOR (b)	test port *UUCSSpp* l	DIOD Trunk
DIOD-TRK	MINOR	test port *UUCSSpp* l	DIOD Trunk
DIOD-TRK	WARNING	test port *UUCSSpp* l	DIOD Trunk

a. *UU* is the universal cabinet number (1 for PPN, 2 -22 for EPNs). *C* is the carrier designation (A, B, C, D, or E). *SS* is the number of the slot in which the circuit pack resides (01 to 21). *pp* is the two digit port number (01, 02, ...).

b. A MAJOR alarm on a trunk indicates that alarms on these trunks are not downgraded by the **set options** command and that at least 75 percent of the trunks in this trunk group are alarmed.

NOTE:
Many trunk problems are caused by incorrect settings of parameters on the trunk group administration form. Settings must be compatible with the local environment and with parameter settings on the far-end. Refer to DEFINITY Communications System Generic 3 V2 Implementation, 555-230-653 for information on how to administer trunks. The Application Notes section of that book shows the correct settings for administrable timers and other parameters on a country-by-country basis.

Direct inward and outward dial (DIOD) trunks are 2-wire analog lines to the CO which support the following services:

- Both incoming and outgoing CO calls
- DID trunk
- DID trunk and 1-way outgoing DIOD

TN429 DIOD trunk circuit packs provide eight ports for loop-start CO trunks and serve as an interface between the 2-wire analog CO line and the 4-wire TDM bus on the switch.

Loop Start Operation

Idle State: Tip = ground, Ring = CO Battery

Outgoing Call

1. PBX Off-Hook (Seize Message): Closes the Tip-Ring Loop CO Response: DC loop current + Dial tone
2. PBX On-Hook (Drop Message): Open Tip-Ring loop, no loop current CO Response: CO goes to idle state (see Note)

Incoming Call

1. CO Applies Ringing Voltage PBX Response: Detect ringing current
2. PBX Off-Hook (Answer Message): Close loop CO Response: Trip ringing, provide loop current
3. PBX On-Hook (Drop Message): Open Tip-Ring loop, no loop current CO Response: CO goes to idle state (see Note)

Direct Inward Dialing (DID)

1. CO Applies Ringing Voltage

   PBX Response: Detect ringing current and close loop

   CO Response: Send DTMF digits

   PBX Response: Acknowledge of Number dialed and open loop
2. PBX Off-Hook (Answer Message): Close loop CO Response: Trip ringing, provide loop current
3. PBX On-Hook (Drop Message): Open Tip-Ring loop, no loop current CO Response: CO goes to idle state (see Note)

NOTE:
CO does not normally provide an On-Hook (Disconnect) signal.

Hardware Error Log Entries and Test to Clear Values

DIOD Trunk Error Log Entries					
Error Type	**Aux Data**	**Associated Test**	**Alarm Level**	**On/Off Board**	**Test to Clear Value**
0*	0	Any	Any	Any	test port sh
15 (b)	any	Port Audit Update Test (#36)			
18	0	Busyout trunk *grp/mbr*	WARNING		release trunk
769 (a)	57392	None	MAJ/MIN/WRN†	ON	
1537		Dial Tone Test (#0)	MAJ/MIN/WRN†	ON	test port long r 2
1793		Loop Around and Conference Test (#33)	MAJ/MIN/WRN†	ON	test port long r 3
2049		NPE Cross Talk Test (#6)	MAJ/MIN/WRN†	ON	test port long r 3
2561 (a,d)	57345	None			
2817 (a,e)	57393	None			
3073 (a,c)	57376	None			
3073 (a,c)	57424	None			
3585 (a,c)	57424	None			

* Run the Short Test Sequence first. If all tests pass, run the Long Test Sequence. Refer to the appropriate test description and follow the recommended procedures.

† Major alarms on this MO may be downgraded to Warning alarms based on the value used in the set options command. If the Minor alarm is not downgraded by the **set-options** values, the Minor alarm is upgraded to a Major alarm if 75 percent of the trunks in this trunk group are alarmed.

Notes:

a. These are in-line errors that have no specific test associated with them. Refer to the following table for an explanation and appropriate action.

b. This is a software audit error that does not indicate any hardware malfunction. Run the Short Test Sequence and investigate associated errors (if any).

c. Aux data 57376—No loop current on incoming call

Aux data 57424—No loop current on outgoing call

These errors cause the Dial Tone Test (#0) to run and are only considered a problem if the Dial Tone Test fails (in which case Error Type 1537 also shows up). In this case, the trunk may be put in ‘‘Ready-for-Service’’ state (shown as ‘‘disconnected’’ by status command), which allows only incoming calls. Run the Dial Tone Test (#0) and follow its outlined procedures.

d. Single polarity ringing current—This error results from abnormal ringing current, but does not prevent the incoming call from being accepted. This error code is logged for information purposes only and does not cause additional testing to occur.

e. Late CO Trunk release—This error indicates that the CO releases the trunk at least four minutes after the PBX dropped the call. This error code is only logged as an informational event and causes no other testing to occur.

DIOD Trunk Errors without Associated Tests

Error Type	Aux Data	Description and Recommendation
769	57392	CO not releasing after call is dropped from PBX end (TN747B), or the loop is not open after a disconnect (TN765). After several occurrences, an off-board (TN747B) or on-board (TN465) warning alarm is generated. Refer problem to CO.
2561	57345	Single polarity ringing current. This error results from abnormal ringing current, but does not prevent the incoming call from being accepted. One cause could be that the reverse current detector associated with the port is failing. (Will not be detected by any tests.) The other cause could be that normal current is not detected. In this case, neither incoming nor outgoing calls can be completed, and the dial tone test also fails. Check for other errors.
2817	57393	CO released the trunk at least four minutes after the PBX dropped the call. This error code is log only and causes no other testing to occur. No alarm is generated. Check for other errors.
3073	57376	No loop current on incoming call. The incoming destination has already answered and no loop current has been detected. If this is a hard fault, the dial tone test and all outgoing calls should also fail. Check for other errors.
3585	57424	No loop current on outgoing call. This error occurs on attempt to seize a loop or ground-start trunk for an outgoing call. An error occurs if loop current is not detected or the caller hangs up before it is detected. Busyout the affected port, and run a Long test. If Dial Tone Test #0 passes, ignore this error. Release the port.

System Technician-Demanded Tests: Descriptions And Error Codes

Always investigate tests in the order they are presented in the table below when inspecting errors in the system. By clearing error codes associated with the *NPE Crosstalk Test,* for example, you may also clear errors generated from other tests in the testing sequence.

Order of Investigation	ShortTest Sequence	LongTest Sequence	D/ND*
NPE Crosstalk Test (#6)		X	ND
Dial Tone Test (#0)		X	ND
Loop Around and Conference Test (#33)		X	ND
Audit Update Test (#36)	X	X	ND

* D = Destructive; ND = Nondestructive

Dial Tone Test (#0)

This test attempts to seize a port and checks for the return of a dial tone.

Table 9-98. TEST #0 Dial Tone Test

Error Code	Test Result	Description/ Recommendation
	ABORT	Could not allocate system resources to run this test. 1. Retry the command at 1-minute intervals a maximum of five times. 2. If the test continues to abort, escalate the problem.
1000	ABORT	System resources required to run this test are not available. The port may be busy with a valid call. Use the command **display port** UUCSSpp to determine the trunk group/member number of the port. Use the **status trunk** command to determine the service state of the port. If the service state indicates that the port is in use, then the port is unavailable for certain tests. You must wait until the port is idle before retesting. 1. If the port status is idle, then retry the command at 1-minute intervals a maximum of 5 times. 2. If the test continues to abort, escalate the problem.
1001	ABORT	Could not allocate the necessary system resources to run this test. 1. Retry the command at 1-minute intervals a maximum of 5 times. 2. If the test continues to abort, escalate the problem.
1002	ABORT	The system could not allocate time slots for the test. The system may be under heavy traffic conditions or it may have time slots out-of-service due to TDM-BUS errors. Refer to TDM-BUS documentation to diagnose any active TDM-BUS errors. 1. If the system has no TDM-BUS errors and is not handling heavy traffic, repeat test at 1-minute intervals a maximum of 5 times. 2. If the test continues to abort, escalate the problem.

Continued on next page

Table 9-98. TEST #0 Dial Tone Test — *Continued*

Error Code	Test Result	Description/ Recommendation
1004	ABORT	The port has been seized by a user for a valid call. Use the **status trunk** command to determine when the port is available for testing. 1. Retry the command at one minute intervals a maximum of 5 times. 2. If the test continues to abort and the port is not in use, escalate the problem.
1018	ABORT	Test has been disabled via administration. 1. The `Maintenance Tests?` field must be set to `y` on the trunk group form for this test to run. This form is accessed with the **change trunk-group** `grp#` command.
1005	ABORT	Trunk has been administered as incoming-only; or DID trunk group type; dial tone can only be obtained on outgoing trunks. This is a normal condition.
2000	ABORT	Response to the test was not received within the allowable time period. 1. Retry the command at 1-minute intervals a maximum of five times. 2. If the test continues to abort, escalate the problem.
	FAIL	Trunk was seized, but dial tone could not be detected. 1. Check for errors on TONE-BD or TONE-PT. Clear any errors found and repeat test. 2. If error has still not cleared, refer problem to CO.

Continued on next page

Table 9-98. TEST #0 Dial Tone Test — *Continued*

Error Code	Test Result	Description/ Recommendation
2002	FAIL	Seizure portion of test failed due to hardware problem. Fault is usually caused by a disconnected trunk. 1. Check trunk wiring to ensure good connection; repeat test if wiring correction made. 2. Locate another identical CO trunk and swap its wiring with one under test. Repeat test on both trunks and determine if problem follows trunk or remains at original port. If problem follows trunk, refer problem to CO. If problem remains at port, replace circuit pack and repeat test. 3. If replacing circuit pack does not clear failure, escalate the problem.
1009	PASS	Detected tone was not pure dial tone. No action required.
	PASS	Trunk was seized, and dial tone was detected. User-reported troubles on this port should be investigated by using other port tests and by examining trunk or external wiring.

NPE Crosstalk Test (#6)

One or more NPEs reside on each circuit pack with a TDM Bus interface. The NPE controls port connectivity and gain, and provides conferencing functions on a per port basis. The NPE Crosstalk Test verifies that this port's NPE channel talks on the selected time slot and never crosses over to time slots reserved for other connections. If the NPE is not working correctly, one way and noisy connections may be observed. This test is usually only part of a port's long test sequence and takes approximately 20 to 30 seconds to complete.

Table 9-99. TEST #6 NPE Crosstalk Test

Error Code	Test Result	Description/ Recommendation
	ABORT	Could not allocate the necessary system resources to run this test. 1. Retry the command at 1-minute intervals a maximum of 5 times. 2. If the test continues to abort, escalate the problem.
1000	ABORT	System resources required to run this test are not available. The port may be busy with a valid call. Use the **display port** UUCSSpp command to determine the trunk group/member number of the port. Use the **status trunk** command to determine the service state of the port. If the service state indicates that the port is in use, then the port is unavailable for certain tests. You must wait until the port is idle before retesting. 1. If the port status is idle, then retry the command at 1-minute intervals a maximum of 5 times. 2. If the test continues to abort, escalate the problem.
1001	ABORT	Could not allocate the necessary system resources to run this test. 1. Retry the command at 1-minute intervals a maximum of 5 times. 2. If the test continues to abort, escalate the problem.

Continued on next page

Table 9-99. TEST #6 NPE Crosstalk Test — *Continued*

Error Code	Test Result	Description/ Recommendation
1002	ABORT	The system could not allocate time slots for the test. The system may be under heavy traffic conditions or it may have time slots out-of-service due to TDM-BUS errors. Refer to TDM-BUS documentation to diagnose any active TDM-BUS errors. 1. If system has no TDM-BUS errors and is not handling heavy traffic, repeat test at 1-minute intervals a maximum of 5 times. 2. If the test continues to abort, escalate the problem.
1003	ABORT	The system could not allocate a tone receiver for the test. The system may be oversized for the number of tone detectors present or some tone detectors may be out-of-service. 1. Look for TTR-LEV errors in the Error Log. If present, refer to TTR-LEV documentation. 2. Look for TONE-PT errors in the Error Log. If present, refer to TONE-PT documentation. 3. If neither condition exists, retry the test at 1-minute intervals a maximum of 5 times. 4. If the test continues to abort, escalate the problem.
1004	ABORT	The port was seized by a valid call during the test. The test has been aborted. Use the **display port** UUCSSpp command to determine the trunk group/member number of the port. Use the **status trunk** command to determine the service state of the port. If the service state indicates that the port is in use, then the port is unavailable for certain tests. You must wait until the port is idle before retesting.
2000	ABORT	Response to the test request was not received within the allowable time period.
2100	ABORT	Could not allocate the necessary system resources to run this test. 1. Retry the command at 1-minute intervals a maximum of 5 times. 2. If the test continues to abort, escalate the problem.

Continued on next page

Table 9-99. TEST #6 NPE Crosstalk Test — *Continued*

Error Code	Test Result	Description/ Recommendation
Any	FAIL	The NPE of the tested port was found to be transmitting in error. This causes noisy and unreliable connections. 1. Replace the circuit pack.
	PASS	The port is correctly using its allocated time slots. User-reported troubles on this port should be investigated by using other port tests and by examining trunk or external wiring.

Loop Around and Conference Circuit Test (#33)

This test checks the reflective loop and conference abilities of a CO port circuit. The test uses 404 Hz, 1004 Hz, and 2804 Hz tones. Each tone is transmitted separately through the loop and checked.

Table 9-100. TEST #33 Loop Around and Conference Circuit Test

Error Code	Test Result	Description/ Recommendation
	ABORT	Could not allocate system resources to run this test.
7	ABORT	Conference Circuit Test aborted.
1000	ABORT	System resources required to run this test are not available. The port may be busy with a valid call. Use the **display port** UUCSSpp command to determine the trunk group/member number of the port. Use the **status trunk** command to determine the service state of the port. If the service state indicates that the port is in use, then the port is unavailable for certain tests. You must wait until the port is idle before retesting. 1. If the port status is idle, then retry the command at 1-minute intervals a maximum of 5 times. 2. If the test continues to abort, escalate the problem.
1004	ABORT	The port has been seized by a user for a valid call. Use the **status trunk** command to determine when the port is available for testing. 1. Retry the command at 1-minute intervals a maximum of 5 times. 2. If the test continues to abort and the port is not in use, escalate the problem.
2100	ABORT	Could not allocate the necessary system resources to run this test. 1. Retry the command at 1-minute intervals a maximum of five times. 2. If the test continues to abort, escalate the problem.

Continued on next page

Table 9-100. TEST #33 Loop Around and Conference Circuit Test — *Continued*

Error Code	Test Result	Description/ Recommendation
7	FAIL	1. Check for errors on TONE-BD or TONE-PT. If there are errors, take the appropriate actions. 2. If the Reflective Loop Around Test fails for all ports on a circuit pack, a -5 volt power problem is indicated. If a TN736 or TN752 power unit circuit pack is present, check the circuit pack for a red LED. If the red LED is on, then replace the appropriate power unit circuit pack. If neither the TN736 nor the TN752 power unit circuit pack is present, then the OLS631DB AC power unit may be defective. The system may contain a TN736 or TN752 power unit circuit pack *or* an OLS631DB AC power unit, *but not both types of power units*. To investigate problems with a an OLD631DB AC power source, refer to CARR-POW Maintenance documentation. 3. Rerun the test. 4. If the test fails again, replace the circuit pack.
	PASS	CO Trunk Loop Around and Conference Test is successful. User-reported troubles on this port should be investigated by using other port tests and by examining trunk or external wiring.

Port Audit Update Test (#36)

This test sends updates of the CO port translation for all ports on the circuit pack which have been translated. The update is non-disruptive and guards against possible corruption of translation data contained on the circuit pack. No response message is expected from the circuit pack once it receives translation updates. The port translation data includes: ground or loop start trunk, tone or rotary dialing trunk, rotary dialing inter-digit timing, network balance R/RC, and disconnect timing.

Table 9-101. TEST #36 Port Audit Update Test

Error Code	Test Result	Description/ Recommendation
	ABORT	Could not allocate the necessary system resources to run this test. 1. Retry the command at 1-minute intervals a maximum of 5 times. 2. If the test continues to abort, escalate the problem.
2100	ABORT	Could not allocate the necessary system resources to run the test.
	FAIL	Internal System Error. 1. Retry the command at 1-minute intervals a maximum of 5 times. 2. If test continues to fail, escalate the problem.
	PASS	This test passed. Translation information was successfully updated on the circuit pack. User-reported troubles on this port should be investigated by using other port tests and by examining trunk or external wiring. If the trunk is busied out, the test does not run, but returns PASS. To verify that the trunk is in-service: 1. Enter **status-command** to verify that the trunk is in-service. If the trunk is in-service, no further action is necessary. If the trunk is out-of-service, continue to Step 2. 2. Enter **release-trunk** command to put trunk back into in-service. 3. Retry the test command.

DISK (MSS Disk Circuit Pack)

MO Name As It Appears in Alarm Log	Alarm Level	Initial System Technician Command to Run (a)	Full Name of MO
DISK	WARNING	test disk a|b long	MSS Disk Circuit Pack
DISK	MINOR	test disk a|b long	MSS Disk Circuit Pack

a. In a system with a simplex SPE, the carrier does not have to be specified. In a system configured with duplicated SPEs, the carrier (a or b) must be specified.

The TN1657 Disk circuit pack is part of the Generic 3r Mass Storage System (MSS). The MSS provides non-volatile storage for system software, translation data, announcement data and program update data. As shown in Figure 9-20 below, the MSS consists of a Host Adapter circuit on the UN332 MSS-Network Control circuit pack (MSSNET), a Small Computer System Interface (SCSI) bus, a TN1656 Tape circuit pack and the TN1657 Disk Drive circuit pack. The Disk Drive acts as the primary storage device and the Tape Drive serves as a backup device.

The system is usually booted from the bootimage stored on disk. The **save translation** and **save announcements** commands save to disk the memory-resident translation data and TN750-resident announcement data, respectively. The **backup disk** command copies data from the disk to the tape for backup storage. The **restore disk** command copies data from the tape back to disk. All MSS components reside in the SPE, or PPN control carrier (carrier A for a simplex SPE, carriers A and B for a duplicated SPE).

The Disk Drive circuit pack contains SCSI bus terminators, an industry standard SCSI-based Disk Drive, and interface circuitry to the private bus to control the LEDs, detect the presence of the circuit pack, and identify the vintage of the hardware.

A -48V to +12V converter circuit on the Tape circuit pack provides power for both the Tape Drive and the Disk Drive. The presence of +12V on these circuit packs is monitored separately by maintenance software so that a failure of the +12V converter on the Tape circuit pack can be identified or ruled out as the source of the problem when the Disk Drive loses +12V power.

The Host Adapter Circuit, Tape circuit pack, and Disk circuit pack are treated as separate, but related, maintenance objects (H-ADAPTER,TAPE, and DISK). Since the Disk circuit pack is controlled by SCSI commands which are generated by the Host Adapter, problems with the Host Adapter can prevent communications with the Disk. Whenever the Host Adapter is taken out of service by the **busy-out host-adapter** command, or due to failure of a critical Host

Adapter test, the Tape and Disk maintenance objects are also placed in a maintenance busyout state.

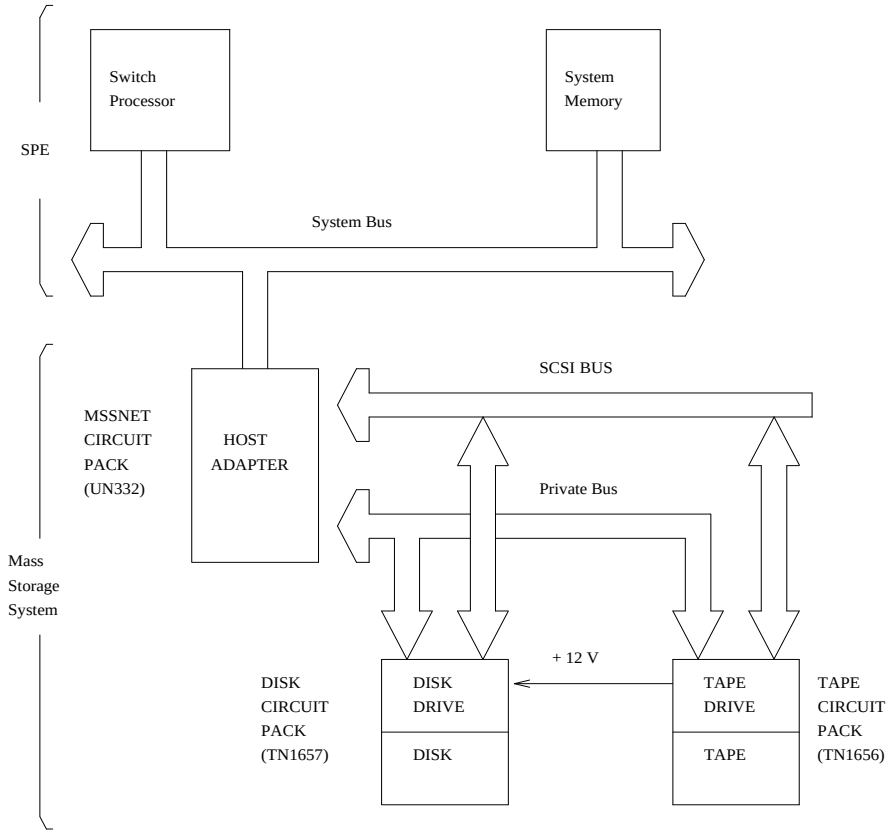

Figure 9-20. Mass Storage System Interactions

General Trouble Shooting Information

Keep the following points in mind when troubleshooting disk problems.

1. *Do not save translations or announcements on the disk if unresolved Disk Drive or Host Adapter problems are present.*

   If there is something wrong with the MSS, any attempt to save translations or announcements could destroy a good copy of the files on disk.

2. When multiple error conditions are present, check for Host Adapter and Tape errors first.

   Maintenance software cannot always distinguish between errors caused by the Disk Drive, and errors caused by the Host Adapter or Tape Drive.

3. In a system with duplex SPEs, the tests run on the standby Disk circuit pack are identical to those run on the active Disk circuit pack. The DUPINT circuit pack handles communications between the active and standby SPEs for the control channel and memory shadowing. Therefore, problems with the DUPINT circuit pack may affect maintenance testing of the standby Disk circuit pack.

4. The *disk data will likely be destroyed* if:

   a. Power is removed from the Disk circuit pack while its yellow LED is on.

   b. The Disk circuit pack is removed while its yellow LED is on.

5. *Tape data may be destroyed* if the Disk circuit pack is removed while the yellow LED on the Tape Drive is on.

Replacing the Disk Circuit Pack

- If the SPE is not duplicated:
  1. Issue the **busyout host-adapter** command.

     The Host Adapter should be "busied out" to prevent other applications from trying to access the disk or tape.
  2. Replace the Disk circuit pack.
  3. Issue the **reset host-adapter** command.

     This allows the disk to "spin up."
  4. Issue the **release host-adapter** command.
  5. Issue the **status spe** command and verify that the disk is now in service.
  6. Issue the **restore disk** command to copy the boot image files, translation files, announcement files, and program update files from the tape to the disk. This may take up to an hour to complete.
  7. Issue the **test stored-data** command to verify that the files on all storage devices are consistent.
- If the SPE is duplicated:
  1. To replace the Disk circuit pack on a system equipped with duplicated SPEs, use the lock-and power-down procedure described in *Replacing SPE Circuit Packs* in Chapter 5, 'Responding to Alarms and Errors".
  2. After the standby SPE is powered up and fully refreshed, enter the **restore disk** command to copy the bootimage files, translation files, announcement files, and program update files from the tape to the disk.
  3. Test the standby Disk using the **test disk long** command.
  4. Verify that the files on all storage devices are consistent by issuing the **test stored-data** command.

Hardware Error Log Entries and Test to Clear Values

DISK Error Log Entries					
Error Type	**Aux Data**	**Associated Test**	**Alarm Level**	**On/Off Board**	**Test to Clear Value**
1 (a)	any	Disk Reset (#809)	MINOR	OFF	reset disk a|b*
18 (b)	0	Busyout Disk (#817)	WARNING	OFF	release disk a|b*
250 (c)	0	Reset Disk (#894)	WARNING	OFF	reset disk a|b*
257 (d)	any	Disk Loop Around (#814)	WARNING	OFF	test disk a|b* sh r 2
258 (e)	any	Disk Loop Around (#814)	WARNING	OFF	test disk a|b* sh r 2
513 (f)	any	Disk Diagnostics (#813)	MINOR	ON	test disk a|b* sh r 2
526 (g)	0	Busyout Host-adapter	WARNING	OFF	rel host-ad a|b*
528 (h)	0		WARNING	OFF	
529 (i)	0		WARNING	OFF	reset disk a|b*
769 (j)	any	Disk Loop Around (#814)	MINOR	ON	test disk a|b* sh r 2
1025 (k)	any	Disk Write-Read (#810)	MINOR	OFF	test disk a|b* l r 2
1281 (l)	any	Disk Diagnostics (#813)	MINOR	ON	test disk a|b* sh r 2
1793 (m)	any	Disk Loop Around (#814)	MINOR	OFF	test disk a|b* sh r 2
2049 (n)	any	Disk Loop Around (#814)	MINOR	OFF	test disk a|b* sh r 2
2305 (o)	any	Disk Status (#815)	MINOR	ON	test disk a|b* sh r 1
2306 (p)	5504	Disk Frmwr Counters (#812)	MINOR	ON	test disk a|b* sh
2561 (q)	any	Disk Write-Read (#810)	MINOR	OFF	test disk a|b* l r 2
2817 (r)	any	Disk Status (#815)	WARNING	ON	test disk a|b* sh r 2
3073 (s)	any	In-line	MINOR	ON	test disk a|b* l r 2
3329 (t)	any	Disk Audit (#811)	MINOR	OFF	test disk a|b* sh r 2
3841 (u)	†	Miscellaneous	MINOR	OFF	test disk a|b* l r 1

* In a system with simplex SPE, the carrier need not be specified. With duplicated SPEs, carrier a or b must be specified.

† If error type 1 with aux data of 123 is present, this field will indicate the cause of the out-of-service condition. See the *MSS Error Actions* table at the end of the section on TAPE.

The *Service State* field in the Alarm Log refers to the accessibility of the device. IN (in service) means that users can access the device and all maintenance tests will run. MTC (maintenance busy) means that the device is busied out; users cannot access it, but all demand maintenance tests will run. OUT (out of service) means that users cannot access the device, but background and demand testing may run.

Notes:

a. Error type 1 means that the device is out of service as a result of maintenance tests detecting a critical failure of the disk drive.

b. Error type 18 means that the disk was busied out on demand from the System Access Terminal.

c. Error type 250 means that the Reset Test (#809 or #894) failed.

d. Error type 257 means that the device could not be accessed.

e. Error type 258 means an attempt was made to remove a disk that was physically present or failure during remove occurred.

f. Error type 513 means that on-board disk drive diagnostics tests requested by the Disk Diagnostic Test (#813) failed.

g. Error type 526 means that the Host Adapter was busied out. This also causes the disk to be busied out.

h. Error type 528 means that there was a failure to insert the disk at system initialization time. This is a software problem. If this error occurs, follow normal escalation procedures.

i. Error type 529 means that there was a failure to put the disk in service or to take it out of service. Execute the **reset disk** command and then execute the **status spe** command to verify that the disk is in service. If the disk is not in the expected state, first clear any other alarms against other MSS components and then execute the **reset disk** command. If that fails to correct the problem, follow normal escalation procedures.

j. Error type 769 means that the disk Loop-around Test (#814) failed.

k. Error type 1025 means that a disk medium error was detected when the disk was read or written. The Disk circuit pack should be replaced if this error continues to be reported.

l. Error type 1281 indicates that a hardware failure condition was detected by the Firmware Error Counters Read and Clear Test (#812). See the *MSS Error Actions* table at the end of the section on TAPE.

m. Error type 1793 is an in-line error from the disk control software that indicates there was a problem with the SCSI Bus Access Failure or Memory Access Failure between the Host Adapter and the Disk Drive. See the *MSS Error Actions* table at the end of the section on TAPE.

n. Error type 2049 indicates that a bad command was sent to the disk drive. This may be caused by a software error or a hardware failure. Execute the **test disk long** command and fix any failures associated with those tests. If

no hardware failures are reported, follow the normal escalation procedures. Error type 2305 means that the system is equipped with more than 2 memory circuit packs and the disk is either not large enough or has not been configured correctly to support the larger memory size.

1. If the value in the Auxiliary Data field is 5513, the vintage of the TN1657 Disk circuit pack is less than V4. This may be verified by executing the **list configuration control** command.
2. If the value in the Auxiliary Data field is 5514, the disk capacity is adequate but the file system on the disk has not been configured for the large coredump file required when greater than 2 memory circuit packs are used.

o. Error type 2306 means that a block has been reassigned on the disk or an attempt to reassign a block has failed. The Minor alarm may clear after executing the Status test (#815) but the data block will remain reassigned as a result of a medium error. The disk drive should be replaced if this Error Type is generated more than 3 times within an hour.

p. Error type 2561 indicates that the Data Write-Read Test (#810) failed.

q. Error 2817 indicates that the Disk Status Test (#815) detected a fault. See the *MSS Error Actions* table at the end of the section on TAPE.

r. Error type 3073 indicates in-line errors reported by the disk control software. See the *MSS Error Actions* table at the end of the section on TAPE.

s. Error type 3329 indicates that the Disk Audit Test (#811) detected a corrupted directory file. This is a serious failure of the disk so the disk should be restored from tape.

t. Error type 3841 is used to record miscellaneous data when an out-of-service condition occurs. See the *MSS Error Actions* table at the end of the section on TAPE.

System Technician-Demanded Tests: Descriptions and Error Codes

Always investigate tests in the order presented in the table below when inspecting errors in the system. By clearing error codes associated with the *Disk Reset Test*, for example, you may also clear errors generated from other tests in the testing sequence.

Order of Investigation	ShortTest Sequence	LongTest Sequence	Reset Board Sequence	D/ND*
Disk Reset Test (#809)	X	X		ND
Disk Diagnostic Test (#813)	X	X		ND
Disk Loop Around Test (#814)	X	X		ND
Disk Status Test (#815)	X	X		ND
Disk Firmware Error Counters Read and Clear Test (#812)	X	X		ND
Disk Write-Read Test (#810)		X		ND
Disk Audit Test (#811)		X		ND
Disk Reset Test (#894)			X	ND

* D = Destructive; ND = Nondestructive

Disk Reset Test (#809 and #894)

The Disk Reset Test consists of the following steps controlled by firmware on the Host Adapter Circuit (located on the MSSNET circuit pack):

- Disk Drive reset

  A SCSI BUS DEVICE RESET message is transmitted to the Disk circuit pack to reset it.

- Presence test

  A SCSI INQUIRY command is sent to the Disk Drive to attempt to query it. If the Disk Drive is present, it will return information about the device type, whether or not its medium is removable, compatibility with established standards, vendor and product IDs, and other miscellaneous information.

- Start unit

  This starts the disk drive spinning.

- Capacity test

  A SCSI READ CAPACITY command is sent to the Disk Drive. It returns with the logical block address and the block length of the last logical block on the medium. This is necessary to restore the information lost after the reset and verify that the device can be accessed.

  A SCSI READ DATA BUFFERS command is sent to the Disk Drive. This returns the size of the controller memory data buffers.

  A SCSI READ DEFECT DATA command is sent to the Disk Drive. This returns the addresses of bad blocks on the disk that must be mapped around.

- Device Diagnostic Tests

  A SCSI SEND DIAGNOSTICS command is sent to the Disk Drive to initiate a set of device-dependent self-tests that are run as a unit. Failures can be for multiple reasons and the return code which indicates the cause of failure is vendor unique. A failure condition will be reported as single failure type since the only repair action is to replace the Disk Drive circuit pack

Table 9-102. TEST #809 Disk Reset Test

Error Code	Test Result	Description/ Recommendation
526	ABORT	The Host Adapter has been busied out. 1. Issue the **release host-adapter** command. 2. If the test continues to abort, follow normal escalation procedures.
1316	ABORT	Could not get access to the Mass Storage System. Other application software may be using it or background maintenance tests may be running. 1. Retry the command at 1-minute intervals for a maximum of 5 retries. 2. If the test continues to abort, verify that the daily translation-save operation is not in progress (issue the **display system-parameters maintenance** command to display the time for scheduled maintenance and the "y/n" option for saving translation daily). If not, follow normal escalation procedures.
1335	ABORT	Could not run the test on the Standby SPE—Duplication not administered. 1. Refer to the documentation for STBY-SPE maintenance. 2. Administer standby present. 3. If the test continues to abort, follow normal escalation procedures.
1338	ABORT	Could not run the test on the Standby SPE—Interchange pending. 1. Refer to the documentation for STBY-SPE maintenance. 2. After interchange occurs, run test on new active SPE. 3. If the test continues to abort, follow normal escalation procedures.

Continued on next page

Table 9-102. TEST #809 Disk Reset Test — *Continued*

Error Code	Test Result	Description/ Recommendation
1339	ABORT	Could not run the test on the Standby SPE—Handshake down. 1. Refer to the documentation for STBY-SPE maintenance. 2. When the standby is restored to service (use **status spe** to determine state of standby) retry the command. 3. If the test continues to abort, follow normal escalation procedures.
1347	ABORT	Could not run the test on the Standby SPE—Refresh not complete. 1. When the standby is restored to service (use **status spe** to determine state of standby) retry the command. 2. If the test continues to abort, follow normal escalation procedures.
1350	ABORT	Could not run the test on the Standby SPE—Shadowing not enabled. 1. When the standby is restored to service (use **status spe** to determine state of standby) retry the command. 2. If the test continues to abort, follow normal escalation procedures.
2000	ABORT	Response to the test request was not received within the allowable time period. 1. Retry the command at 1-minute intervals for a maximum of 5 retries. 2. If the test continues to abort, follow normal escalation procedures.

Continued on next page

Table 9-102. TEST #809 Disk Reset Test — *Continued*

Error Code	Test Result	Description/ Recommendation
2500	ABORT	Could not run the test on the Standby SPE—Internal software error. 1. Retry the command at 1-minute intervals for a maximum of 5 retries. 2. If the test continues to abort, follow normal escalation procedures.
5102	ABORT	Could not allocate the Mass Storage System to run this test 1. Retry the command at 1-minute intervals for a maximum of 5 retries. 2. If the test continues to abort, verify that the daily translation-save operation is not in progress (issue the **display system-parameters maintenance** command to display the time for scheduled maintenance and the "y/n" option for saving translation daily). If this is not the case, follow normal escalation procedures.
	NO BOARD	The disk has been placed in the "uninstalled" state. 1. Verify that the disk drive is fully inserted and powered up. 2. Attempt a demand reset of the disk. 3. If the reset fails, follow normal escalation procedures.

Continued on next page

Table 9-102. TEST #809 Disk Reset Test — *Continued*

Error Code	Test Result	Description/ Recommendation
5513	FAIL	The system is equipped with 3 memory circuit packs but the capacity of the disk is not large enough for the coredump file. 1. Issue the **list configuration control** command and verify that the control carrier is equipped with 3 memory boards and the vintage of the TN1657 Disk circuit pack is less than Vintage 4. 2. Replace the Disk circuit pack with one of Vintage 4 or greater, issue the **reset disk** command, and perform the **restore disk** command. The restore operation may take up to 1 hour to complete. 3. If the test continues to fail with Error Code 5513, follow normal escalation procedures.
5514	FAIL	The system is equipped with 3 memory circuit packs but the disk has not been configured for a large coredump file. The tape and disk should have been configured for the larger memory size as part of the procedures for installing 3 memory circuit packs as described in the Installation Manual. 1. Issue the **configure tape 3-mem** command to ensure that the file system on the tape has been configured for the large core dump file. This command will not execute if the tape has already been configured. 2. Issue the **restore disk** command. This step may take up to 1 hour for a complete restore. 3. Execute the **test disk** command to clear the alarm. 4. If the test continues to fail with Error Code 5514, follow normal escalation procedures.

Continued on next page

Table 9-102. TEST #809 Disk Reset Test — *Continued*

Error Code	Test Result	Description/ Recommendation
Any Other**	FAIL	The disk configuration information shows the disk is missing or the disk LED test failed. 1. Retry the command for a maximum of 5 retries. 2. If the command continues to fail, replace the Disk circuit pack, issue the **reset disk** command and perform the **restore disk** command. This will take up to 1 hour for a complete restore. 3. If the test continues to fail, replace the MSSNET circuit pack. 4. If the test continues to fail, follow normal escalation procedures.
	PASS	The Disk status test passed successfully. Look at the results of other tests to see if it is operating correctly.

** See the MSS Error Actions Table at the end of the TAPE section.

Disk Write-Read Test (#810)

The Disk Write-Read Test verifies that data can be written to the disk and read back successfully. This test consists of the following steps:

1. Maintenance software in the SPE issues a request to the Host Adapter for a transfer of data between SPE memory and a specified block on the disk. The Host Adapter firmware issues a SCSI **WRITE** command to the Disk Drive which results in a transfer of data between the SPE memory and the disk.
2. Maintenance software in the SPE issues a request to the Host Adapter to run a checksum on the data previously written to the disk. The Host Adapter reads the data off the disk and computes a checksum which is returned to the SPE maintenance software.
3. Maintenance software compares the value of the checksum from the Host Adapter with the checksum it previously calculated on the data it stored on the disk.

Multiple failure conditions can occur during this test since it uses both the software and hardware functions used during normal operations

Table 9-103. TEST #810 Disk Write-Read Test

Error Code	Test Result	Description/ Recommendation
1301 1302	ABORT	Could not run the test—internal MSS error 1. Retry the command 2. If the test continues to abort, follow normal escalation procedures.
1304	ABORT	Could not allocate the Mass Storage System to run this test. Other application software may be using it or background maintenance tests may be running. 1. Retry the command at 1-minute intervals for a maximum of 5 retries. 2. If the test continues to abort, verify that the daily translation-save operation is not in progress (Use the **display system-parameters maintenance** command to display the start time for scheduled maintenance and the "y/n" option for saving translation daily). If not, follow normal escalation procedures.

Continued on next page

Table 9-103. TEST #810 Disk Write-Read Test — *Continued*

Error Code	Test Result	Description/ Recommendation
1316	ABORT	Could not get access to the Mass Storage System. Other application software may be using it or background maintenance tests may be running. 1. Retry the command at 1-minute intervals for a maximum of 5 retries. 2. If the test continues to abort, verify that the daily translation-save operation is not in progress (issue the **display system-parameters maintenance** command to display the time for scheduled maintenance and the "y/n" option for saving translation daily). If not, follow normal escalation procedures.
1335	ABORT	Could not run the test on the Standby SPE—Duplication not administered. 1. Refer to the documentation for STBY-SPE maintenance. 2. Administer standby present. 3. If the test continues to abort, follow normal escalation procedures.
1338	ABORT	Could not run the test on the Standby SPE—Interchange pending. 1. Refer to the documentation for STBY-SPE maintenance. 2. After interchange occurs, run test on new active SPE. 3. If the test continues to abort, follow normal escalation procedures.

Continued on next page

Table 9-103. TEST #810 Disk Write-Read Test — *Continued*

Error Code	Test Result	Description/ Recommendation
1339	ABORT	Could not run the test on the Standby SPE—Handshake down. 1. Refer to the documentation for STBY-SPE maintenance. 2. When the standby is restored to service (use **status spe** to determine state of standby) retry the command. 3. If the test continues to abort, follow normal escalation procedures.
1347	ABORT	Could not run the test on the Standby SPE—Refresh not complete. 1. When the standby is restored to service (use **status spe** to determine state of standby) retry the command. 2. If the test continues to abort, follow normal escalation procedures.
1350	ABORT	Could not run the test on the Standby SPE—Shadowing not enabled. 1. When the standby is restored to service (use **status spe** to determine state of standby) retry the command. 2. If the test continues to abort, follow normal escalation procedures.
2000	ABORT	Response to the test request was not received within the allowable time period. 1. Retry the command at 1-minute intervals for a maximum of 5 retries. 2. If the test continues to abort, follow normal escalation procedures.

Continued on next page

Table 9-103. TEST #810 Disk Write-Read Test — *Continued*

Error Code	Test Result	Description/ Recommendation
2500	ABORT	Could not run the test on the Standby SPE—Internal software error. 1. Retry the command at 1-minute intervals for a maximum of 5 retries. 2. If the test continues to abort, follow normal escalation procedures.
5102	ABORT	Could not allocate the Mass Storage System to run this test 1. Retry the command at 1-minute intervals for a maximum of 5 retries. 2. If the test continues to abort, verify that the daily translation-save operation is not in progress (issue the **display system-parameters maintenance** command to display the time for scheduled maintenance and the "y/n" option for saving translation daily). If not, follow normal escalation procedures.
	NO BOARD	The disk has been placed in the "uninstalled" state. 1. Verify that the disk drive is fully inserted and powered up. 2. Attempt a demand reset of the disk. 3. If the reset fails, follow normal escalation procedures.

Continued on next page

Table 9-103. TEST #810 Disk Write-Read Test — *Continued*

Error Code	Test Result	Description/ Recommendation
**	FAIL	The disk could not be accessed, the checksum on the data written did not match the checksum in memory or the data read did not match the data written. 1. Retry the command for a maximum of 5 retries. 2. If the command continues to fail, replace the Disk circuit pack, issue the **reset disk** command and perform the **restore disk** command. This will take up to 1 hour for a complete restore. 3. If the test continues to fail, replace the MSSNET circuit pack. 4. If the test continues to fail, follow normal escalation procedures.
	PASS	The Disk write read test executed successfully. Look at the results of other tests to see if it is operating correctly.

** See the MSS Error Actions Table at the end of the TAPE section.

Disk Audit Test (#811)

The Disk Audit Test verifies the following Disk Medium conditions.

- The directory can be read.
- There are no "dirty" files. What is meant by "dirty" is that the data in the file may not be complete or the directory entry was never updated after the data was written to the device

Table 9-104. TEST #811 Disk Audit Test

Error Code	Test Result	Description/ Recommendation
1316	ABORT	Could not get access to the Mass Storage System. Other application software may be using it or background maintenance tests may be running. 1. Retry the command at 1-minute intervals for a maximum of 5 retries. 2. If the test continues to abort, verify that the daily translation-save operation is not in progress (issue the **display system-parameters maintenance** command to display the time for scheduled maintenance and the "y/n" option for saving translation daily). If not, follow normal escalation procedures.
1335	ABORT	Could not run the test on the Standby SPE—Duplication not administered. 1. Refer to the documentation for STBY-SPE maintenance. 2. Administer standby present. 3. If the test continues to abort, follow normal escalation procedures.
1338	ABORT	Could not run the test on the Standby SPE—Interchange pending. 1. Refer to the documentation for STBY-SPE maintenance. 2. After interchange occurs, run test on new active SPE. 3. If the test continues to abort, follow normal escalation procedures.

Continued on next page

Table 9-104. TEST #811 Disk Audit Test — *Continued*

Error Code	Test Result	Description/ Recommendation
1339	ABORT	Could not run the test on the Standby SPE—Handshake down. 1. Refer to the documentation for STBY-SPE maintenance. 2. When the standby is restored to service (use **status spe** to determine state of standby) retry the command. 3. If the test continues to abort, follow normal escalation procedures.
1347	ABORT	Could not run the test on the Standby SPE—Refresh not complete. 1. When the standby is restored to service (use **status spe** to determine state of standby) retry the command. 2. If the test continues to abort, follow normal escalation procedures.
1350	ABORT	Could not run the test on the Standby SPE—Shadowing not enabled. 1. When the standby is restored to service (use **status spe** to determine state of standby) retry the command. 2. If the test continues to abort, follow normal escalation procedures.
2000	ABORT	Response to the test request was not received within the allowable time period. 1. Retry the command at 1-minute intervals for a maximum of 5 retries. 2. If the test continues to abort, follow normal escalation procedures.

Continued on next page

Table 9-104. TEST #811 Disk Audit Test — *Continued*

Error Code	Test Result	Description/ Recommendation
2500	ABORT	Could not run the test on the Standby SPE—Internal software error. 1. Retry the command at 1-minute intervals for a maximum of 5 retries. 2. If the test continues to abort, follow normal escalation procedures.
5102	ABORT	Could not allocate the Mass Storage System to run this test 1. Retry the command at 1-minute intervals for a maximum of 5 retries. 2. If the test continues to abort, verify that the daily translation-save operation is not in progress (issue the **display system-parameters maintenance** command to display the time for scheduled maintenance and the "y/n" option for saving translation daily). If this is not the case, follow normal escalation procedures.
	NO BOARD	The disk has been placed in the "uninstalled" state. 1. Verify that the disk drive is fully inserted and powered up. 2. Attempt a demand reset of the disk. 3. If the reset fails, follow normal escalation procedures.

Continued on next page

Table 9-104. TEST #811 Disk Audit Test — *Continued*

Error Code	Test Result	Description/ Recommendation
**	FAIL	The audit of the disk directory failed. 1. Perform a **restore disk full** command. This will take up to 1 hour for a complete restore (G3V3 full disk restore + or - 30 minutes). 2. If the test continues to fail, replace the Disk circuit pack, issue the **reset disk** command and perform the **restore disk** command. 3. If the test continues to fail, replace the MSSNET circuit pack. 4. If the test continues to fail, follow normal escalation procedures.
	PASS	The disk directory audit passed successfully. Look at the results of other tests to see if it is operating correctly.

** See the MSS Error Actions Table at the end of the TAPE section.

Disk Firmware Error Counters Read and Clear Test (#812)

The Host Adapter firmware is constantly running background tests on each of its devices. When an error is detected by one of these background tests, the appropriate counter in the host adapter dual port RAM is incremented. The Disk Firmware Error Counters Read and Clear Test requests that the firmware return these errors to the software and clear the area in dual port RAM. If any counter is non-zero, the software then increments the appropriate software counter. The 16 errors reported by the firmware are:

- Unexpected interrupt from the SCSI Bus Interface Controller Chip (SBICC)
- SBICC timed out during SCSI command
- Error interrupt from the Direct Memory Access Controller (DMAC)
- DMAC timeout without issuing interrupt
- Disk self-test failed
- Disk external looparound test failed
- Command failed with bad sense key
- Disk could not be accessed
- Flaw detected in disk medium
- Unrecoverable hardware error on disk
- Invalid parameter in SCSI command
- Media removed or device reset
- Disk is write protected
- Disk reached end of medium
- Block reassigned on disk
- Block reassignment on disk failed

Table 9-105. TEST #812 Disk Firmware Error Counters Read and Clear Test

Error Code	Test Result	Description/ Recommendation
1305	ABORT	Could not read firmware error counters. 1. Retry the command at 1-minute intervals for a maximum of 5 retries. 2. If the test continues to abort, follow normal escalation procedures.
1306	ABORT	Could not read configuration area for defect information. 1. Retry the command at 1-minute intervals for a maximum of 5 retries. 2. If the test continues to abort, follow normal escalation procedures.
1316	ABORT	Could not get access to the Mass Storage System. Other application software may be using it or background maintenance tests may be running. 1. Retry the command at 1-minute intervals for a maximum of 5 retries. 2. If the test continues to abort, verify that the daily translation-save operation is not in progress (issue the **display system-parameters maintenance** command to display the time for scheduled maintenance and the "y/n" option for saving translation daily). If not, follow normal escalation procedures.
1335	ABORT	Could not run the test on the Standby SPE—Duplication not administered. 1. Refer to the documentation for STBY-SPE maintenance. 2. Administer standby present. 3. If the test continues to abort, follow normal escalation procedures.

Continued on next page

Table 9-105. TEST #812 Disk Firmware Error Counters Read and Clear Test — *Continued*

Error Code	Test Result	Description/ Recommendation
1338	ABORT	Could not run the test on the Standby SPE—Interchange pending. 1. Refer to the documentation for STBY-SPE maintenance. 2. After interchange occurs, run test on new active SPE. 3. If the test continues to abort, follow normal escalation procedures.
1339	ABORT	Could not run the test on the Standby SPE—Handshake down. 1. Refer to the documentation for STBY-SPE maintenance. 2. When the standby is restored to service (use **status spe** to determine state of standby) retry the command. 3. If the test continues to abort, follow normal escalation procedures.
1347	ABORT	Could not run the test on the Standby SPE—Refresh not complete. 1. When the standby is restored to service (use **status spe** to determine state of standby) retry the command. 2. If the test continues to abort, follow normal escalation procedures.
1350	ABORT	Could not run the test on the Standby SPE—Shadowing not enabled. 1. When the standby is restored to service (use **status spe** to determine state of standby) retry the command. 2. If the test continues to abort, follow normal escalation procedures.

Continued on next page

Table 9-105. TEST #812 Disk Firmware Error Counters Read and Clear Test — *Continued*

Error Code	Test Result	Description/ Recommendation
2000	ABORT	Response to the test request was not received within the allowable time period. 1. Retry the command at 1-minute intervals for a maximum of 5 retries. 2. If the test continues to abort, follow normal escalation procedures.
2500	ABORT	Could not run the test on the Standby SPE—Internal software error. 1. Retry the command at 1-minute intervals for a maximum of 5 retries. 2. If the test continues to abort, follow normal escalation procedures.
5102	ABORT	Could not allocate the Mass Storage System to run this test 1. Retry the command at 1-minute intervals for a maximum of 5 retries. 2. If the test continues to abort, verify that the daily translation-save operation is not in progress (issue the **display system-parameters maintenance** command to display the time for scheduled maintenance and the "y/n" option for saving translation daily). If not, follow normal escalation procedures.
	NO BOARD	The disk has been placed in the "uninstalled" state. 1. Verify that the disk drive is fully inserted and powered up. 2. Attempt a demand reset of the disk. 3. If the reset fails, follow normal escalation procedures.

Continued on next page

Table 9-105. TEST #812 Disk Firmware Error Counters Read and Clear Test — *Continued*

Error Code	Test Result	Description/ Recommendation
**	FAIL	At least one of the firmware error counters was non-zero. 1. Retry the command at 1-minute intervals for a maximum of 5 retries. 2. If the test continues to fail, replace the Disk circuit pack, issue the **reset disk** command and perform the **restore disk** command. This will take up to 1 hour for a complete restore. 3. If the test continues to fail, replace the MSSNET circuit pack. 4. If the test continues to fail, follow normal escalation procedures.
	PASS	All of the firmware error counters were zero. Look at the results of other tests to see if it is operating correctly.

** See the MSS Error Actions Table at the end of the TAPE section.

Disk Diagnostic Test (#813)

The Disk Diagnostic test causes the Host Adapter to send a SCSI **SEND DIAGNOSTICS** command to the DISK Drive circuit pack. This initiates a set of device-dependent self-tests that are run as a unit. Failures can be for multiple reasons. The return code which indicates the cause of failure is vendor unique. A failure condition will be reported as single failure type since the only repair action is to replace the Disk Drive circuit pack

Table 9-106. TEST #813 Disk Diagnostic Test

Error Code	Test Result	Description/ Recommendation
1316	ABORT	Could not get access to the Mass Storage System. Other application software may be using it or background maintenance tests may be running. 1. Retry the command at 1-minute intervals for a maximum of 5 retries. 2. If the test continues to abort, verify that the daily translation-save operation is not in progress (issue the **display system-parameters maintenance** command to display the time for scheduled maintenance and the 'y/n' option for saving translation daily). If not, follow normal escalation procedures.
1335	ABORT	Could not run the test on the Standby SPE—Duplication not administered. 1. Refer to the documentation for STBY-SPE maintenance. 2. Administer standby present. 3. If the test continues to abort, follow normal escalation procedures.
1338	ABORT	Could not run the test on the Standby SPE—Interchange pending. 1. Refer to the documentation for STBY-SPE maintenance. 2. After interchange occurs, run test on new active SPE. 3. If the test continues to abort, follow normal escalation procedures.

Continued on next page

Table 9-106. TEST #813 Disk Diagnostic Test — *Continued*

Error Code	Test Result	Description/ Recommendation
1339	ABORT	Could not run the test on the Standby SPE—Handshake down. 1. Refer to the documentation for STBY-SPE maintenance. 2. When the standby is restored to service (use **status spe** to determine state of standby) retry the command. 3. If the test continues to abort, follow normal escalation procedures.
1347	ABORT	Could not run the test on the Standby SPE—Refresh not complete. 1. When the standby is restored to service (use **status spe** to determine state of standby) retry the command. 2. If the test continues to abort, follow normal escalation procedures.
1350	ABORT	Could not run the test on the Standby SPE—Shadowing not enabled. 1. When the standby is restored to service (use **status spe** to determine state of standby) retry the command. 2. If the test continues to abort, follow normal escalation procedures.
2000	ABORT	Response to the test request was not received within the allowable time period. 1. Retry the command at 1-minute intervals for a maximum of 5 retries. 2. If the test continues to abort, follow normal escalation procedures.

Continued on next page

Table 9-106. TEST #813 Disk Diagnostic Test — *Continued*

Error Code	Test Result	Description/ Recommendation
2500	ABORT	Could not run the test on the Standby SPE—Internal software error. 1. Retry the command at 1-minute intervals for a maximum of 5 retries. 2. If the test continues to abort, follow normal escalation procedures.
5102	ABORT	Could not allocate the Mass Storage System to run this test 1. Retry the command at 1-minute intervals for a maximum of 5 retries. 2. If the test continues to abort, verify that the daily translation-save operation is not in progress (issue the **display system-parameters maintenance** command to display the time for scheduled maintenance and the 'y/n' option for saving translation daily). If this is not the case, follow normal escalation procedures.
	NO BOARD	The disk has been placed in the "uninstalled" state. 1. Verify that the disk drive is fully inserted and powered up. 2. Attempt a demand reset of the disk. 3. If the reset fails, follow normal escalation procedures.

Continued on next page

Table 9-106. TEST #813 Disk Diagnostic Test — *Continued*

Error Code	Test Result	Description/ Recommendation
**	FAIL	A Disk diagnostic test failed. 1. Retry the command for a maximum of 5 retries. 2. If the command continues to fail, replace the Disk circuit pack, issue the **reset disk** command and perform the **restore disk** command. This will take up to 1 hour for a complete restore. 3. If the test continues to fail, replace the MSSNET circuit pack. 4. If the test continues to fail, follow normal escalation procedures.
	PASS	The Disk passed all diagnostic tests. Look at the results of other tests to see if it is operating correctly.

** See the MSS Error Actions Table at the end of the TAPE section.

Disk Loop-Around Tests (#814)

This test extends the Host Adapter Loop-Around test to send data from the Host Adapter to buffers on the Disk Drive circuit pack and back to the Host Adapter. It may detect errors related to the Host Adapter, SCSI bus, and the Disk Drive circuit pack. It is intended to functionally test the Disk Drive circuit pack to the extent possible without actually writing data to the disk.

This test consists of two sets of tests:

- Disk Internal Loop-Around

  Data is generated in the RAM of the Host Adapter and transferred to its SCSI Data Memory. A SCSI **WRITE DATA BUFFERS** command is sent to the Disk Drive circuit pack which causes the Disk Drive circuit pack to copy the data to its buffers. A SCSI **READ DATA BUFFERS** command is then sent by the Host Adapter to the Disk Drive circuit pack which causes the Disk Drive circuit pack to transfer the data from its buffers back to the Host Adapter's SCSI Data Memory. The Host Adapter then copies the data back to its private RAM where it compares it with the original test data.

- Disk External Loop-Around

  This test is similar to the Internal Loop-around test except that the data originates in the Host Adapter's Dual Port RAM and it is transferred to and from the SCSI Data Memory using SPE system bus accesses. Only a small amount of data is sent to the Disk Drive circuit pack in order to keep system bus access to a minimum.

Table 9-107. TEST #814 Disk Loop-Around Test

Error Code	Test Result	Description/ Recommendation
1316	ABORT	Could not get access to the Mass Storage System. Other application software may be using it or background maintenance tests may be running. 1. Retry the command at 1-minute intervals for a maximum of 5 retries. 2. If the test continues to abort, verify that the daily translation-save operation is not in progress (issue the **display system-parameters maintenance** command to display the time for scheduled maintenance and the "y/n" option for saving translation daily). If not, follow normal escalation procedures.
1335	ABORT	Could not run the test on the Standby SPE—Duplication not administered. 1. Refer to the documentation for STBY-SPE maintenance. 2. Administer standby present. 3. If the test continues to abort, follow normal escalation procedures.
1338	ABORT	Could not run the test on the Standby SPE—Interchange pending. 1. Refer to the documentation for STBY-SPE maintenance. 2. After interchange occurs, run test on new active SPE. 3. If the test continues to abort, follow normal escalation procedures.

Continued on next page

Table 9-107. TEST #814 Disk Loop-Around Test — *Continued*

Error Code	Test Result	Description/ Recommendation
1339	ABORT	Could not run the test on the Standby SPE—Handshake down. 1. Refer to the documentation for STBY-SPE maintenance. 2. When the standby is restored to service (use **status spe** to determine state of standby) retry the command. 3. If the test continues to abort, follow normal escalation procedures.
1347	ABORT	Could not run the test on the Standby SPE—Refresh not complete. 1. When the standby is restored to service (use **status spe** to determine state of standby) retry the command. 2. If the test continues to abort, follow normal escalation procedures.
1350	ABORT	Could not run the test on the Standby SPE—Shadowing not enabled. 1. When the standby is restored to service (use **status spe** to determine state of standby) retry the command. 2. If the test continues to abort, follow normal escalation procedures.
2000	ABORT	Response to the test request was not received within the allowable time period. 1. Retry the command at 1-minute intervals for a maximum of 5 retries. 2. If the test continues to abort, follow normal escalation procedures.

Continued on next page

Table 9-107. TEST #814 Disk Loop-Around Test — *Continued*

Error Code	Test Result	Description/ Recommendation
2500	ABORT	Could not run the test on the Standby SPE—Internal software error. 1. Retry the command at 1-minute intervals for a maximum of 5 retries. 2. If the test continues to abort, follow normal escalation procedures.
5102	ABORT	Could not allocate the Mass Storage System to run this test 1. Retry the command at 1-minute intervals for a maximum of 5 retries. 2. If the test continues to abort, verify that the daily translation-save operation is not in progress (issue the **display system-parameters maintenance** command to display the time for scheduled maintenance and the "y/n" option for saving translation daily). If this is not the case, follow normal escalation procedures.
	NO BOARD	The disk has been placed in the "uninstalled" state. 1. Verify that the disk drive is fully inserted and powered up. 2. Attempt a demand reset of the disk. 3. If the reset fails, follow normal escalation procedures.

Continued on next page

Table 9-107. TEST #814 Disk Loop-Around Test — *Continued*

Error Code	Test Result	Description/ Recommendation
**	FAIL	The Disk loop-around test failed. 1. Retry the command for a maximum of 5 retries. 2. If the command continues to fail, replace the Disk circuit pack, issue the **reset disk** command and perform the **restore disk** command. This will take up to 1 hour for a complete restore. 3. If the test continues to fail, replace the MSSNET circuit pack. 4. If the test continues to fail, follow normal escalation procedures.
	PASS	The Disk loop-around test passed. Look at the results of other tests to see if it is operating correctly.

** See the MSS Error Actions Table at the end of the TAPE section.

Disk Status Test (#815)

The Disk Status Test verifies the following:

- The Host Adapter knows about the existence of the Disk Drive.
- The LEDs on the faceplate can be turned on and off correctly. This verifies only that the LED control and status logic is operating correctly. LED operation may also be tested visually with **test led**.
- The presence of +5V and +12V

Table 9-108. TEST #815 Disk Status Test

Error Code	Test Result	Description/ Recommendation
1306 1307 1308	ABORT	Internal software error between maintenance software and MSS driver. 1. Retry the command at 1-minute intervals for a maximum of 5 retries. 2. If the test continues to abort, follow normal escalation procedures.
1316	ABORT	Could not get access to the Mass Storage System. Other application software may be using it or background maintenance tests may be running. 1. Retry the command at 1-minute intervals for a maximum of 5 retries. 2. If the test continues to abort, verify that the daily translation-save operation is not in progress (issue the **display system-parameters maintenance** command to display the time for scheduled maintenance and the "y/n" option for saving translation daily). If not, follow normal escalation procedures.
1335	ABORT	Could not run the test on the Standby SPE—Duplication not administered. 1. Refer to the documentation for STBY-SPE maintenance. 2. Administer standby present. 3. If the test continues to abort, follow normal escalation procedures.

Continued on next page

Table 9-108. TEST #815 Disk Status Test — *Continued*

Error Code	Test Result	Description/ Recommendation
1338	ABORT	Could not run the test on the Standby SPE—Interchange pending. 1. Refer to the documentation for STBY-SPE maintenance. 2. After interchange occurs, run test on new active SPE. 3. If the test continues to abort, follow normal escalation procedures.
1339	ABORT	Could not run the test on the Standby SPE—Handshake down. 1. Refer to the documentation for STBY-SPE maintenance. 2. When the standby is restored to service (use **status spe** to determine state of standby) retry the command.
1347	ABORT	Could not run the test on the Standby SPE—Refresh not complete. 1. When the standby is restored to service (use **status spe** to determine state of standby) retry the command. 2. If the test continues to abort, follow normal escalation procedures.
1350	ABORT	Could not run the test on the Standby SPE—Shadowing not enabled. 1. When the standby is restored to service (use **status spe** to determine state of standby) retry the command. 2. If the test continues to abort, follow normal escalation procedures.

Continued on next page

Table 9-108. TEST #815 Disk Status Test — *Continued*

Error Code	Test Result	Description/ Recommendation
2000	ABORT	Response to the test request was not received within the allowable time period. 1. Retry the command at 1-minute intervals for a maximum of 5 retries. 2. If the test continues to abort, follow normal escalation procedures.
2500	ABORT	Could not run the test on the Standby SPE—Internal software error. 1. Retry the command at 1-minute intervals for a maximum of 5 retries. 2. If the test continues to abort, follow normal escalation procedures.
5102	ABORT	Could not allocate the Mass Storage System to run this test 1. Retry the command at 1-minute intervals for a maximum of 5 retries. 2. If the test continues to abort, verify that the daily translation-save operation is not in progress (issue the **display system-parameters maintenance** command to display the time for scheduled maintenance and the "y/n" option for saving translation daily). If this is not the case, follow normal escalation procedures.
	NO BOARD	The disk has been placed in the "uninstalled" state. 1. Verify that the disk drive is fully inserted and powered up. 2. Attempt a demand reset of the disk. 3. If the reset fails, follow normal escalation procedures.

Continued on next page

Table 9-108. TEST #815 Disk Status Test — *Continued*

Error Code	Test Result	Description/ Recommendation
5513	FAIL	The system is equipped with 3 memory circuit packs but the capacity of the disk is not large enough for the coredump file. 1. Issue the **list configuration control** command and verify that the control carrier is equipped with 3 memory boards and the vintage of the TN1657 Disk circuit pack is less than Vintage 4. 2. Replace the Disk circuit pack with one of Vintage 4 or greater, issue the **reset disk** command, and perform the **restore disk** command. The restore operation may take up to 1 hour to complete. 3. If the test continues to fail with Error Code 5513, follow normal escalation procedures.
5514	FAIL	The system is equipped with 3 memory circuit packs but the disk has not been configured for a large coredump file. The tape and disk should have been configured for the larger memory size as part of the procedures for installing 3 memory circuit packs as described in the Installation Manual. 1. Issue the **configure tape 3-mem** command to ensure that the file system on the tape has been configured for the large core dump file. This command will not execute if the tape has already been configured. 2. Issue the **restore disk** command. This step may take up to 1 hour for a complete restore. 3. Execute the **test disk** R command to clear the alarm. 4. If the test continues to fail with Error Code 5514, follow normal escalation procedures.

Continued on next page

Table 9-108. TEST #815 Disk Status Test — *Continued*

Error Code	Test Result	Description/ Recommendation
Any Other**	FAIL	The disk configuration information shows the disk is missing or the disk LED test failed. 1. Retry the command for a maximum of 5 retries. 2. If the command continues to fail, replace the Disk circuit pack, issue the **reset disk** command and perform the **restore disk** command. This will take up to 1 hour for a complete restore. 3. If the test continues to fail, replace the MSSNET circuit pack. 4. If the test continues to fail, follow normal escalation procedures.
	PASS	The Disk status test passed successfully. Look at the results of other tests to see if it is operating correctly.

** See the MSS Error Actions Table at the end of the TAPE section.

Disk Reset Test (#894)

The Disk Reset Test is executed when the **reset disk** command is entered at the terminal. The test results for Test 894 are the same as those for Test 809. The only difference between Test 809, which is run as part of the test sequence for the **test disk** command, and Test 894 which is run in response to the **reset disk** command is that all disk alarms are resolved when Test 894 passes while only some disk alarms may be resolved when Test 809 passes.

Refer to the results for Test 809 for the appropriate repair procedures.

DS1-BD (DS1 Interface Circuit Pack)

MO Name As It Appears in Alarm Log	Alarm Level	Initial System Technician Command to Run (a)	Full Name of MO
DS1-BD	MINOR	test board UUCSS l	DS1 Interface Circuit Pack
DS1-BD	WARNING	test board UUCSS sh	DS1 Interface Circuit Pack

a. UU is the universal cabinet number (1 for PPN, 2 - 44 for EPNs). C is the carrier designation (A, B, C, D, or E). SS is the number of the slot in which the circuit pack resides (01 to 21).

The DS1 Interface circuit pack provides an interface to an external DS1 facility and supports 24 DS0 channels carried on a 1.544 Mbps DS1 link. These DS0 channels can be administered as either trunks to other switches or lines to off-premises stations. The TN464C and later suffix Universal DS1 Interface also supports a 32-channel interface on a 2.048Mbps link. The functions and maintenance strategy for the TN464 circuit packs are covered under a separate maintenance object, UDS1-BD.

DS1-BD maintenance logs in-line errors reported by the DS1 Interface circuit pack, runs tests for error diagnosis and recovery, and raises and clears alarms. The following table shows the capabilities of each DS1 circuit pack. The TN722 and TN722B are not supported on G3r V1 or later systems.

Circuit Pack Code	24 Channel	32 Channel	Tie Trunk Signaling	CO Trunk Signaling	DID Trunk Signaling	OPS Line Signaling
TN722/B	x		x			
TN767/B/C/D/E	x		x	x	x	x
TN464C/D/E/F	x	x	x	x	x	x (24-chl only)

ISDN-PRI Trunk signaling (for example, Q.921, Q.931) requires a TN464C/D and is handled by system software. The TN464 is covered in the UDS1-BD section of this chapter.

Each trunk and line have their own maintenance strategies. However, they all depend on the health of the DS1 Interface circuit pack. Refer to the following sections for details: TIE-DS1, CO-DS1, DID-DS1, OPS-LINE, ISDN-TRK, and ISDN-LNK. Signaling over the DS1 link must be synchronized between the transmitting and receiving ends to ensure error-free communication. Refer to SYNC (Synchronization) Maintenance documentation for details.

The TN767E circuit pack combined with AT&T's new 120A1 CSU Module forms an Enhanced Integrated CSU. The new 120A1 CSU Module, when combined with the functionality provided by the TN767E hardware and firmware, and new switch software, provides functionality equivalent to an external stand-alone AT&T ESF T1 CSU. The 120A1 CSU Module connects to the TN767E circuit pack on the I/O connector panel on the back of the port carrier. The new CSU Module, thus becomes an integrated part of the DEFINITY. system. Throughout the document, the term 120A1 will mean a 120A1 or later suffix CSU Module.

The Enhanced Integrated CSU is for use in the United States of America with 1.544 Mbps DS1 service. For further details on the 120A1 CSU Module see *DEFINITY. Communications System Generic 1, Generic 2, and Generic 3 V1 and V2 - Integrated CSU Module Installation and Operation, 555-230-193.*

The TN767E and 120A1 CSU Module support on-demand loopback tests that assist in the detection of faults between the TN767E circuit pack and the CSU Module, between the Integrated CSU and the optional Customer Premises Loopback Jack, or between the Integrated CSU and remote CSU. These loopback tests are explained in detail later in this DS1-BD section, but Figure 9-21 gives a high level overview of the loopback points.

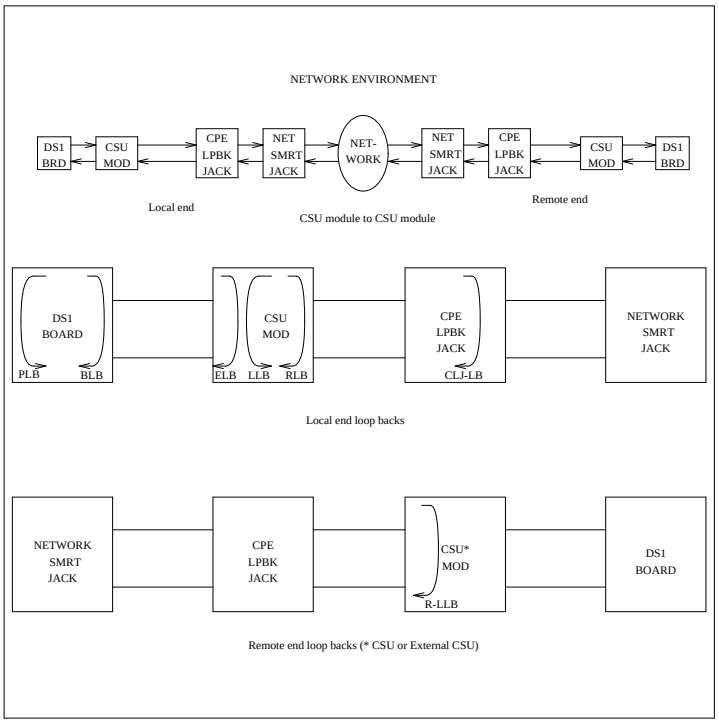

Figure 9-21. High Level Overview Of Loopback Points

The following list of acronym definitions are for Figure 9-21above:

- PLB = Payload Loopback
- BLB = Board Loopback
- ELB = Equipment Loopback
- LLB = Line Loopback
- RLB = Repeater Loopback
- CLJ = Loopback Jack Loopback
- R-LLB = Remote Line Loopback
- SMRT = Smart Jack
- LPBK = Loopback

For more information about DS1 interfaces, see the *DEFINITY Communications System DS1/CEPT1/ISDN-PRI Reference*, 555-025-107.

Hardware Error Log Entries and Test to Clear Values

Table 9-109. DS1 Interface Circuit Pack Maintenance Error Log Entries

Error Type	Aux Data	Associated Test	Alarm Level	On/Off Board	Test to Clear Value
0*	0	Any	Any	Any	test board UUCSS
1(a)	0	Circuit pack removed or SAKI Test (#53)	MIN/WRN‡	ON	
18(b)	0	busy-out board UUCSS	WARNING	OFF	release board UUCSS
23(c)	0		WARNING	OFF	add ds1 UUCSS
125(d)		None	MINOR	ON	
257	65535	Control Channel Loop Test (#52)	MINOR	ON	test board UUCSS l r 20
257(e)	Any	None			
513(f)	Any		MINOR	ON	
769(g)	4358				
1025(e)	4363	NPE Audit Test (#50)			
1281	Any	Loss of Signal Alarm Inquiry Test (#138)	MIN/WRN†	OFF	test board UUCSS
1300(h)	Any	Loss Of Signal Alarm Inquiry Test (#138)	WARNING	OFF	test board UUCSS
1301(i)	Any	Loss Of Signal Alarm Inquiry Test (#138)	WARNING	OFF	test board UUCSS
1302(j)	Any	Loss Of Signal Alarm Inquiry Test (#138)	MIN/WRN†	OFF	test board UUCSS
1303(k)	Any	Loss Of Signal Alarm Inquiry Test (#138)	MIN/WRN†	ON	test board UUCSS
1310(l)	Any	Board Loopback Test (#1209)	MINOR	ON	test ds1-loop UUCSS ds1/csu-loopback-tests

Continued on next page

Table 9-109. DS1 Interface Circuit Pack Maintenance Error Log Entries — *Continued*

Error Type	Aux Data	Associated Test	Alarm Level	On/Off Board	Test to Clear Value
1311(m)	Any	Equipment Loopback Test (#1210)	MIN/WRN†	OFF	test ds1-loop UUCSS ds1/csu-loopback-test
1312(n)	Any	Repeater Loopback Test (#1211)	MIN/WRN†	OFF	test ds1-loop UUCSS ds1/csu-loopback-tests
1313(o)	Any	CPE Loopback Jack Test (#1212)	MIN/WRN†	OFF	test ds1-loop UUCSS end-loopback/span-test
1314(p)	Any	Far CSU Loopback Test (#1213)	MIN/WRN†	OFF	test ds1-loop UUCSS end-loopback/span-test
1320	Any	Loss of Signal Alarm Inquiry Test (#138)	MIN/WRN†	OFF	test board UUCSS
1321	Any	Loss of Signal Alarm Inquiry Test (#138)	MIN/WRN†	OFF	test board UUCSS
1322	Any	Loss of Signal Alarm Inquiry Test (#138)	MINOR	ON	test board UUCSS
1323	Any	Loss of Signal Alarm Inquiry Test (#138)	MIN/WRN†	OFF	test board UUCSS
1324	Any	Loss of Signal Alarm Inquiry Test (#138)	WARNING	OFF	test board UUCSS
1538 (q)	Any		MINOR	ON	
1793	Any	Blue Alarm Inquiry Test (#139)	WARNING	OFF	test board UUCSS
1794	Any	Blue Alarm Inquiry Test (#139)	WARNING	OFF	test board UUCSS
1795	Any	Blue Alarm Inquiry Test (#139)	WARNING	OFF	test board UUCSS

Continued on next page

Table 9-109. DS1 Interface Circuit Pack Maintenance Error Log Entries — *Continued*

Error Type	Aux Data	Associated Test	Alarm Level	On/Off Board	Test to Clear Value
2049	Any	Red Alarm Inquiry Test (#140)	MIN/WRN†	OFF	test board UUCSS
2305	Any	Yellow Alarm Inquiry Test (#141)	MINOR	OFF	test board UUCSS
2306	Any	Yellow Alarm Inquiry Test (#141)	MINOR	OFF	test board UUCSS
2561	Any	Major Alarm Inquiry Test (#142)	MIN/WRN†	OFF	test board UUCSS
2817		Minor Alarm Inquiry Test (#143)	MIN/WRN†	OFF	test board UUCSS
3073 to 3160	Any	Slip Alarm Inquiry Test (#144)	MIN/WRN†	OFF	test board UUCSS r 6
3329 to 3345	Any	Misframe Alarm Inquiry Test (#145)	MIN/WRN†	OFF	test board UUCSS r 6
3840(r)	Any	None			
3900(s)	Any	CPE Loopback Jack Test (#1212)			
3901(t)	Any	Far CSU Loopback Test (#1213)			
3902(u)	Any	One-Way Span Test (#1214)			
3999 (v)	Any	None			

* Run the Short Test Sequence first. If all tests pass, run the Long Test Sequence. Refer to the appropriate test description and follow the recommended procedures.

† Major alarms on this MO may be downgraded to Warning alarms based on the value used in the set options command.

‡ If ports are assigned to the circuit pack, then a minor alarm is raised. If no ports are assigned to the circuit pack, then a warning alarm is raised. The alarm is raised after the circuit pack has been missing for 15 minutes. Warning alarms are also raised against any ports administered on the circuit pack.

Notes:

a. This error indicates that the circuit pack has stopped functioning or is not completely administered. The alarm is logged about 15 minutes after the circuit pack has been removed or 11 minutes after the SAKI Test (#53) fails.

   To be completely administered, a DS1 circuit pack must meet all 3 of the following conditions:

   1. Have an entry in the circuit plan via the **change circuit pack** command
   2. Be administered via the **add ds1 UUCSS** command
   3. Be physically inserted in the appropriate slot

   If the circuit pack has an entry in the circuit plan and either of the other two conditions are *not* met, a MINOR alarm is logged. To resolve the error either

   1. Make sure all conditions for administration are met and that a functioning DS1 circuit pack is inserted in the correct slot.
   2. Completely remove the DS1-BD from the system using the following steps:
      a. Remove any administered DS1 trunks or access endpoints associated with the circuit pack from their trunk groups.
      b. Execute the **remove ds1** UUCSS and **change circuit pack** UUCSS **commands.**

   If all the administration conditions are met for this circuit pack and the red LED is still on, follow the instructions for *LED Alarms with Error Type 1* in Chapter 7, "LED Indicators".

b. The DS1 Interface circuit pack has been busied out by a **busy-out board UUCSS** command.

c. The DS1-BD circuit pack is not completely administered. A completely administered DS1-BD circuit pack should have an entry in the circuit plan via the **change circuit pack** command, should have been administered via the **add ds1 UUCSS** command, and should have been inserted into the appropriate port slot.

d. The circuit pack in the slot does not match the type administered to that position. Either replace the circuit pack with one of the type administered, or use **change circuit-pack** to readminister the slot. This error may also indicate that the 24/32-channel selection on the DS1 administration form does not match the configuration of the circuit pack.

e. This error is associated with the Common Port Circuit Pack Maintenance Test. Refer to XXX-BD (Common Port Circuit Pack) Maintenance documentation for details.

f. The DS1 Interface circuit pack has detected a transient hardware problem (for example, external RAM failure, internal RAM failure, internal ROM failure, or instruction set failure). This error will disappear when no faults are detected for 30 minutes. The value in the Aux Data field indicates the type of hardware problem. However, when this error is reported with Aux Data in the range of 4352 to 4358, it indicates the circuit pack has reported a hardware failure such that the circuit pack should be replaced.

g. The DS1 Interface circuit pack has detected a transient hardware logic error (for example, program logic inconsistency). This error will disappear when no faults are detected for 100 minutes. The value in Aux Data field indicates the type of hardware problem.

h. CSU Module missing. The *Near-End CSU Type* field on the *add ds1* form has been administered as *integrated* but the 120A1 CSU Module is not physically connected (or is improperly connected) to the TN767E board on the back of the port carrier.

   If using the 120A1 CSU Module, plug (or replug) the CSU Module into the TN767E circuit pack's connector on the I/O connector panel on back of the carrier. Otherwise, change the *Near-End CSU Type* field using the *change ds1* form to *other*.

   If this error remains after plugging the CSU Module into the board's connector, there could be a problem with the I/O connector panel.

i. CSU Module not expected. The 120A1 CSU Module is physically connected to the TN767E board on the back of the port carrier but the *Near-End CSU Type* field on the *add ds1* form has not been administered as *integrated*.

   If the 120A1 CSU Module is to be used, use the *change ds1* command to change the *Near-End CSU Type* field to *integrated*. Otherwise, physically remove the 120A1 CSU Module from the back of the port carrier.

j. DS1 configuration error. Attempting to use the 120A1 CSU Module with a TN767E circuit pack that is configured for 32-channel (2.048 Mbps) operation. The CSU Module only works with a DS1 board configured for 24-channel (1.544 Mbps) operation in the United States of America.

k. DS1 circuit pack suffix incorrect for CSU Module. The *Near-End CSU Type* field on the *add ds1* form has been administered as *integrated* but the DS1 circuit pack is not a TN767E or later suffix DS1 board.

   If the 120A1 CSU Module is to be used, remove the circuit pack and replace it with a TN767E or later suffix board. Otherwise, use the *change ds1* command to change the *Near-End CSU Type* field to *other.*

l. BLB failure. This error occurs when the DS1 Board Loopback (BLB) demand test fails. Repeat the test using the following commands: *busyout board UUCSS*, *test ds1-loop UUCSS ds1/csu-loopback-tests*, *release board UUCSS*. If the BLB test continues to fail, then the TN767E circuit pack needs to be replaced.

m. ELB failure. This error occurs when the Integrated CSU (I-CSU) Module Equipment Loopback (ELB) test fails. This test is executed by the I-CSU during I-CSU power-up/reset (i.e., TN767E board physically inserted and 120A1 CSU Module already installed) or when the 120A1 CSU Module is plugged on to an already initialized DS1 board. The ELB test is also executed as part of the command *test ds1-loop UUCSS ds1/csu-loopback-tests*.

   Attempt to clear the alarm via the following commands: *busyout board UUCSS*, *test ds1-loop UUCSS ds1/csu-loopback-tests*, *release board UUCSS*. If the ELB test continues to fail, then either the TN767E board, the CSU Module, or the I/O cable between the backplane and the CSU module (or any combination thereof) has failed. Attempt to isolate where the failure is occurring by re-executing the test by replacing one piece of hardware at a time.

n. RLB failure. This error occurs when the Integrated CSU (I-CSU) Module Repeater Loopback (RLB) test fails. This test is executed by the I-CSU during I-CSU power-up/reset (i.e., TN767E board physically inserted and 120A1 CSU Module already installed) or when the 120A1 CSU Module is plugged on to an already initialized DS1 board. The RLB test is also executed as part of the command *test ds1-loop UUCSS ds1/csu-loopback-tests*.

   Attempt to clear the alarm via the following commands: *busyout board UUCSS*, *test ds1-loop UUCSS ds1/csu-loopback-tests*, *release board UUCSS*. If the RLB test continues to fail, then the CSU Module needs to be replaced.

o. CPE Loopback Jack deactivation error. This error occurs when the TN767E circuit pack could not deactivate a CPE Loopback Jack loopback.

   Attempt to clear the alarm via the following commands: *busyout board UUCSS*, *test ds1-loop UUCSS end-loopback/span-test*, *release board UUCSS*. If the attempt to deactivate the CPE Loopback Jack loopback continues to fail, other steps must be taken to deactivate the loopback.

p. Far CSU Loopback deactivation error. This error occurs when the TN767E circuit pack could not deactivate a far-end CSU loopback on power-up/reset or upon software request.

   Attempt to clear the alarm via the following commands: *busyout board UUCSS*, *test ds1-loop UUCSS end-loopback/span-test*, *release board UUCSS*. If the attempt to deactivate the Far CSU loopback continues to fail, then escalate the problem.

q. The hyperactive circuit pack is out-of-service and may exhibit one or more of the following symptoms:

   1. The common circuit pack level tests such as Test #51 and/or Test #220 are aborting with error code 2000.
   2. The tests run on the ports of this circuit pack are returning NO BOARD.

3. A busy-out/release of the circuit pack has no affect on test results.
4. A **list configuration** command shows that the circuit pack and ports are properly installed.

The circuit pack is isolated from the system and all trunks of this circuit pack are placed into the out-of-service state. The system will try to restore the circuit pack within 15 minutes. When no faults are detected for 15 minutes, the DS1 Interface circuit pack is restored to normal operation. All trunks of the DS1 Interface circuit pack are then returned to the in-service state. If the error recurs after 15 minutes, then replace the circuit pack (refer to *Replacing Circuit Packs* in Chapter 5, "Responding to Alarms and Errors").

r. This error is not service-affecting and can be ignored.

s. Error 3900 is used to give status information on a CPE Loopback Jack Test. The value in the Aux Data field indicates the status of the loopback test.

1 — Test is currently running.

2 — Test failed because loopback could not be activated.

3 — Test failed because test pattern could not be detected.

4 — Test has been terminated.

t. Error 3901 is used to give status information on a Far CSU Loopback Test. The value in the Aux Data field indicates the status of the loopback test.

1 — Test is currently running.

2 — Test failed because loopback could not be activated.

3 — Test failed because test pattern could not be detected.

4 — Test has been terminated.

u. Error 3902 is used to give status information on a One-Way Span Test. The value in the Aux Data field indicates the status of the span test.

1 — Test is currently running.

2 — Test has failed because test could not be activated.

3 — Test pattern was not received from the far end.

4 — Test has been terminated.

v. Error type 3999 indicates that the circuit pack sent a large number of control channel messages to the switch within a short period of time. If error type 1538 is also present, then the circuit pack was taken out-of-service due to hyperactivity. If error type 1538 is not present, then the circuit pack has not been taken out-of-service, but it has generated 50% of the messages necessary to be considered hyperactive. This may

be completely normal during heavy traffic periods. However, if this error type is logged when the circuit pack is being lightly used, it may indicate a problem with the circuit pack or the equipment attached to it.

System Technician-Demanded Tests: Descriptions and Error Codes

Always investigate tests in the order they are presented in Table 9-110 below when inspecting errors in the system. By clearing error codes associated with the *NPE Connection Audit Test,* for example, you may also clear errors generated from other tests in the testing sequence

Table 9-110. System Technician-Demanded Tests: DS1-BD

Order of Investigation	ShortTest Sequence	Long Test Sequence	Reset Board Sequence	test ds1-loop Command	D/ND*
NPE Connection Audit Test (#50)		X			ND
Control Channel Loop Test (#52)		X			ND
Loss of Signal Alarm Inquiry Test (#138)	X	X			ND
Blue Alarm Inquiry Test (#139)	X	X			ND
Red Alarm Inquiry Test (#140)	X	X			ND
Yellow Alarm Inquiry Test (#141)	X	X			ND
Major Alarm Inquiry Test (#142)	X	X			ND
Minor Alarm Inquiry Test (#143)	X	X			ND
Slip Alarm Inquiry Test (#144)	X	X			ND
Misframe Alarm Inquiry Test (#145)	X	X			ND
Translation Update Test (#146)	X	X			ND
ICSU Status LEDs Test (#1227)	X	X			ND
SAKI Sanity Test (#53)			X		D

Continued on next page

Table 9-110. System Technician-Demanded Tests: DS1-BD — *Continued*

Order of Investigation	ShortTest Sequence	Long Test Sequence	Reset Board Sequence	test ds1-loop Command	D/ND*
Internal Loop Around Test (#135)			X		D
DS1/CSU Loopback Tests				X	D
DS1 Board Loopback Test (#1209)				X	D
CSU Equipment Loopback Test (#1210)				X	D
CSU Repeater Loopback Test (#1211)					
CSU Repeater Loopback Test (#1211)				X	D
CPE Loopback Jack Test (#1212)				X	D
Far CSU Loopback Test (#1213)				X	D
One-Way Span Test (#1214)				X	D
Inject Single Bit Error (#1215)				X	D
End Loopback/Span Test (#1216)				X	D

* D = Destructive, ND = Non-destructive

NPE Connection Audit Test (#50):

The system sends a message to the on-board microprocessor to update the network connectivity translation for all the Network Processing Elements (NPEs) on the circuit pack.

TEST #50 NPE Connection Audit Test

Error Code	Test Result	Description/ Recommendation
None 2100	ABORT	System resources required for this test are not available.
1019	ABORT	Test already in progress.
	FAIL	Internal System Error 1. Retry the command at 1-minute intervals a maximum of 5 times. 2. If the test continues to abort/fail, escalate the problem.
	PASS	The circuit pack's NPEs have been updated with their translation.
0	NO BOARD	The DS1 Interface circuit pack is not administered. 1. Administer the DS1 Interface circuit pack by issuing the **add ds1 UUCSS** command. 2. Run the test again. 3. If the test continues to return NO BOARD, escalate the problem.

Control Channel Loop Around Test (#52)

This test queries the circuit pack for its circuit pack code and vintage and verifies its records.

TEST #52 Control Channel Loop Around Test

Error Code	Test Result	Description/ Recommendation
None 2100	ABORT	System resources required for this test are not available. 1. Retry the command at 1-minute intervals a maximum of 5 times. 2. If the test continues to abort, escalate the problem.
	FAIL	The circuit pack failed to return the circuit pack code or vintage. 1. Retry the command a few times a maximum of 5 times. 2. If the problem continues, and if the circuit pack is one of the Port circuit packs, replace the circuit pack. Otherwise, refer to *Replacing Circuit Packs* in Chapter 5, "Responding to Alarms and Errors" for instructions on how to replace a Processor Complex circuit pack. 3. Retry the command a few times a maximum of 5 times. 4. If the test continues to fail, escalate the problem.
	PASS	Communication with this circuit pack is successful.
0	NO BOARD	The DS1 Interface circuit pack is not administered. 1. Administer the DS1 Interface circuit pack by issuing the **add ds1 UUCSS** command. 2. Run the test again. 3. If the test continues to return NO BOARD, escalate the problem.

SAKI Sanity Test (#53)

This test is destructive. This test resets the circuit pack.

Table 9-111. TEST #53 SAKI Sanity Test

Error Code	Test Result	Description/ Recommendation
None	ABORT	System resources required for this test are not available. 1. Retry the command at 1-minute intervals a maximum of 5 times. 2. If the test continues to abort, escalate the problem.
1005	ABORT	Wrong circuit pack configuration to run this test. This error applies only to DS1 Interface circuit packs. It means the DS1 Interface circuit pack is providing timing for the system and, therefore, it cannot be reset without major system disruptions. 1. If the circuit pack needs to be reset, then set synchronization to another DS1 Interface circuit pack or to the Tone-Clock circuit pack and try again. Refer to SYNC (Synchronization) Maintenance documentation.
1015	ABORT	Port is not out-of-service. 1. Busyout the circuit pack. 2. Execute the command again.
2100	ABORT	System resources required for this test are not available. 1. Retry the command at 1-minute intervals a maximum of 5 times. 2. If the test continues to abort, escalate the problem.
1	FAIL	The circuit pack failed to reset.
2	FAIL	The circuit pack failed to restart. 1. Execute the command again. 2. If the problem persists, replace the circuit pack.

Continued on next page

Table 9-111. TEST #53 SAKI Sanity Test — *Continued*

Error Code	Test Result	Description/ Recommendation
	PASS	The circuit pack initializes correctly. 1. Run the Short Test Sequence.
0	NO BOARD	The DS1 Interface circuit pack is not administered. 1. Administer the DS1 Interface circuit pack by issuing the **add ds1 UUCSS** command. 2. Run the test again. 3. If the test continues to return NO BOARD, escalate the problem.

Internal Loop Around Test (#135)

This test is destructive.

The Internal Loop Around Test is run by looping the transmitted DS1 bit stream back into the DS1's board receiver. The loop occurs just before the DS1 facility interface. The test is highly destructive and can only be initiated by a system technician-demanded **reset board UUCSS** command.

All trunks on the DS1 Interface circuit pack must be busied out via the system technician **busy-out board** command before running the Internal Loop Around Test. When the Internal Loop Around Test is initiated, maintenance software sends appropriate messages to the DS1 Interface circuit pack to start the test. The test uses the Tone Generator and Tone Detector to exercise a bit pattern consistency test for all ports. If the transmitted and received bit patterns on a trunk are different, the test fails.

When the test is complete, the maintenance software sends a stop loop around message to the DS1 Interface circuit pack to put the circuit pack back into the normal operation mode. All trunks of the DS1 Interface circuit pack are restored to the in-service state after the **release board** command is entered

Table 9-112. TEST #135 Internal Loop Around Test

Error Code	Test Result	Description/ Recommendation
2012	ABORT	Internal System Error 1. Retry the command at 1-minute intervals a maximum of 5 times. 2. If the test continues to abort, escalate the problem.
1002	ABORT	The system could not allocate time slots for the test. The system may be under heavy traffic conditions or it may have time slots out-of-service due to TDM-BUS errors. Refer to TDM-BUS Maintenance documentation to diagnose any active TDM-BUS errors. 1. If system has no TDM-BUS errors and is not handling heavy traffic, repeat test at 1-minute intervals a maximum of 5 times. 2. If the test continues to abort, escalate the problem.
1003	ABORT	The system could not allocate a tone receiver for the test. The system may be oversized for the number of Tone Detectors present or some Tone Detectors may be out-of-service. 1. Look for TTR-LEV errors in the Error Log. If present, refer to TTR-LEV (TTR Level) Maintenance documentation. 2. Look for TONE-PT errors in the Error Log. If present, refer to TONE-PT (Tone Generator) Maintenance documentation. 3. If neither condition exists, retry the test at 1-minute intervals a maximum of 5 times. 4. If the test continues to abort, escalate the problem.
1004	ABORT	Received an incoming call originated on a port of the DS1 circuit pack during the test. 1. Enter the **busy-out board UUCSS** command to put all trunks of DS1 Interface circuit pack to out-of-service state. 2. Retry the command at 1-minute intervals a maximum of 5 times. 3. If the test continues to abort, escalate the problem.

Continued on next page

Table 9-112. TEST #135 Internal Loop Around Test — *Continued*

Error Code	Test Result	Description/ Recommendation
1015	ABORT	Ports on DS1 Interface circuit pack have not been busied out. 1. Enter the **busy-out board UUCSS** command to put all trunks of the DS1 Interface circuit pack into out-of-service state. 2. Retry the command. 3. If the test continues to abort, escalate the problem.
1039	ABORT	The DS1 Interface circuit pack is providing timing for the system. Therefore, it cannot be reset without major system disruption. 1. If the DS1 Interface circuit pack needs to be tested, set the synchronization reference to another DS1 Interface circuit pack or to the Tone-Clock circuit pack via the following command sequence: ■ Issue the **disable synchronization-switch** command. ■ Next, issue the **set synchronization UUCSS** command. ■ Lastly, issue the **enable synchronization-switch** command.
2000	ABORT	Response to the test request was not received within the allowable time period. If Error Type 1538 is present in the Error Log, follow the maintenance strategy recommended for this error type.
2100	ABORT	Could not allocate the necessary system resources to run this test. 1. Retry the command at 1-minute intervals for a maximum of 5 times. 2. If the test continues to abort, escalate the problem.

Continued on next page

Table 9-112. TEST #135 Internal Loop Around Test — *Continued*

Error Code	Test Result	Description/ Recommendation
	FAIL	DS1 Interface circuit pack failed in the Internal Loop Around Test. 1. Retry the command at 1-minute intervals a maximum of 5 times. 2. If the DS1 Interface circuit pack is TN767, enter the **list measurement ds1-log UUCSS** command to read the error seconds measurement. Otherwise, skip this step. 3. Verify that both endpoints of the DS1 link are administered using the same signaling mode, framing mode, and line coding. 4. Check the physical connectivity of DS1 Interface circuit packs and cable. 5. Replace the local DS1 Interface circuit pack and repeat the test. 6. Contact T1 Network Service to diagnose the remote DS1 endpoint. 7. If the test still fails, then escalate the problem.
	PASS	All administered trunks of DS1 Interface circuit pack pass the Internal Loop Around Test. The bit pattern consistency test is executed successfully over the path that covers a DS1 port, cable, and the external NCTE device.
0	NO BOARD	The DS1 Interface circuit pack is not administered. 1. Administer the DS1 Interface circuit pack by issuing the **add ds1 UUCSS** command. 2. Run the test again. 3. If the test continues to return NO BOARD, escalate the problem.

Loss of Signal Alarm Inquiry Test (#138)

This test verifies the synchronization status and continuity of the DS1 link. The Loss of Signal alarm indicates that the DS1 Interface circuit pack is unable to derive the synchronization clock from the DS1 facility. When the DS1 Interface circuit pack detects a Loss of Signal alarm, it stops providing the synchronization clock for the system if it is administered as a timing source and transmits a Yellow alarm to the remote DS1 endpoint.

When the Loss of Signal alarm is confirmed, the maintenance software places all trunks or ports of the DS1 Interface circuit pack into the out-of-service state. The inquiry test will run every 10 minutes until the loss of signal has been restored.

The DS1 Interface circuit pack raises a Loss of Signal alarm after the signal has been lost for about 1second. It will not retire the alarm until the signal has returned for about 10 seconds.

This test is also used to maintain the new AT&T 120A1 CSU Module. This CSU Module, when combined with the functionality provided by the TN767E circuit pack, provides functionality equivalent to an external stand-alone AT&T ESF T1 CSU. The combination of the TN767E and 120A1 CSU Module is known as an Enhanced Integrated CSU (I-CSU).

If a TN767E circuit pack detects certain I-CSU hardware errors, it will notify maintenance. When the maintenance subsystem receives notification of the I-CSU error, it will execute this Loss of Signal Inquiry test. The test, in addition to querying for a Loss Of Signal alarm condition, will also query the TN767E board to confirm the I-CSU error. A Minor or Warning alarm will be raised depending on the severity of the I-CSU error. The trunks on the board may be taken out of service if the I-CSU error is deemed serious.

If a Loss Of Signal alarm and an I-CSU error co-exist, the Loss Of Signal alarm condition will take priority and the board and all trunks on the board will be put in the out-of-service state. Errors will be logged, however, for both.

When the maintenance subsystem receives notification that the I-CSU hardware error condition no longer exists, maintenance will restore the board and all trunks to their previous service state if the alarm can be cleared (no other I-CSU errors or Loss Of Signal alarm exist)

Table 9-113. TEST #138 Loss of Signal Alarm Inquiry Test

Error Code	Test Result	Description/ Recommendation
	ABORT	Internal System Error
2000	ABORT	Response to the test request was not received within the allowable time period. If Error Type 1538 is present in the Error Log, follow the maintenance strategy recommended for this error type.
2100	ABORT	Could not allocate the necessary system resources to run this test. 1. Retry the command at 1-minute intervals for a maximum of 5 times. 2. If the test continues to abort, escalate the problem.
	FAIL	DS1 Interface circuit pack detects a Loss of Signal alarm. The physical link is broken or the remote DS1 endpoint is down. All trunks or ports of this DS1 interface circuit pack are out-of-service. If the DS1 Interface circuit pack is designated as the supplier of the system synchronization source, then the system synchronization maintenance will adopt a source elsewhere. Refer to the SYNC section in this chapter for details. 1. Check the physical connection of the DS1 Interface circuit pack and the cable. If a 120A1 CSU Module is physically connected to a TN767E board on the back of the port carrier, check the physical connection of the CSU Module and make sure the Network Interface cable is plugged into the CSU Module's NETWORK jack. 2. If the DS1 Interface circuit pack connects to a T1 facility, call the vendor of the T1 carrier to diagnose the remote DS1 endpoint. If the DS1 Interface circuit pack connects directly to a switch, call the system technician of the remote switch to diagnose the DS1 endpoint.

Continued on next page

Table 9-113. TEST #138 Loss of Signal Alarm Inquiry Test — *Continued*

Error Code	Test Result	Description/ Recommendation
1300	FAIL	The CSU Module is missing. The *Near-End CSU Type* field on the *add ds1* form has been administered as *integrated* but the 120A1 CSU Module is not physically connected to the TN767E board on the back of the port carrier. 1. If using the 120A1 CSU Module, plug the CSU Module into the TN767E circuit pack's connector on the I/O connector panel on back of the carrier. Otherwise, change the *Near-End CSU Type* field using the *change ds1* form to *other*. 2. Run the test again.
1301	FAIL	The 120A1 CSU Module is physically connected to the TN767E board on the back of the port carrier but the *Near-End CSU Type* field on the *add ds1* form has not been administered as *integrated*. 1. If the 120A1 CSU Module is to be used, use the *change ds1* command to change the *Near-End CSU Type* field to *integrated*. Otherwise, physically remove the 120A1 CSU Module from the back of the port carrier. 2. Run the test again.
1302	FAIL	Attempting to use the 120A1 CSU Module with a TN767E circuit pack that is configured for 32-channel (2.048 Mbps) operation. The CSU Module only works with a DS1 board configured for 24-channel (1.544 Mbps) operation in the United States of America. 1. If the 120A1 CSU Module is to be used, physically remove the TN767E circuit pack and reconfigure for 24-channel (1.544 Mbps) operation. 2. Reinsert the circuit pack and run the test again.

Continued on next page

Table 9-113. TEST #138 Loss of Signal Alarm Inquiry Test — *Continued*

Error Code	Test Result	Description/ Recommendation
1303	FAIL	The DS1 circuit pack Suffix is incorrect for CSU Module administration. The *Near-End CSU Type* field on the *add ds1* form has been administered as *integrated* but the DS1 circuit pack is not a TN767E or later suffix DS1 board. 1. If the CSU Module is to be used, and the *Near-End CSU* Type field is set to *integrated*, to allow for CSU module administration, remove the circuit pack and replace it with a TN767E or later suffix board. Otherwise use the *change ds1* command to change the *Near-End CSU Type* field to *other*.
1310	FAIL	The DS1 Board Loopback (BLB) demand test (#1209) failed. 1. Repeat the test using the *test ds1-loop UUCSS ds1/csu-loopback-tests* command. 2. If the BLB test continues to fail, then replace the TN767E circuit pack. 3. Run this test again.

Continued on next page

Table 9-113. TEST #138 Loss of Signal Alarm Inquiry Test — *Continued*

Error Code	Test Result	Description/ Recommendation
1311	FAIL	The Integrated CSU (I-CSU) Module Equipment Loopback (ELB) test (#1210) failed. This test is executed by the I-CSU during I-CSU power-up/reset (i.e., TN767E board physically inserted and 120A1 CSU Module already installed) or when the 120A1 CSU Module is plugged on to an already initialized DS1 board. The ELB test is also executed as part of the command *test ds1-loop UUCSS ds1/csu-loopback-tests*. 1. Execute the *test ds1-loop UUCSS ds1/csu-loopback-tests* command. 2. If the ELB test continues to fail, then either the TN767E board, the CSU Module, or the I/O cable between the backplane and the CSU module (or any combination thereof) has failed. Attempt to isolate the problem to one of these areas. Begin by replacing the CSU Module and running the *test ds1-loop UUCSS ds1/csu-loopback-tests* command again. 3. If the ELB test continues to fail, then replace the TN767E board and run the *test ds1-loop UUCSS ds1/csu-loopback-tests* command again. 4. If the ELB test continues to fail, the problem could be in the I/O cable between the backplane and the CSU module.

Continued on next page

Table 9-113. TEST #138 Loss of Signal Alarm Inquiry Test — *Continued*

Error Code	Test Result	Description/ Recommendation
1312	FAIL	The Integrated CSU (I-CSU) Module Repeater Loopback (RLB) test (#1211) failed. This test is executed by the I-CSU during I-CSU power-up/reset (i.e., TN767E board physically inserted and 120A1 CSU Module already installed) or when the 120A1 CSU Module is plugged on to an already initialized DS1 board. The RLB test is also executed as part of the command *test ds1-loop UUCSS ds1/csu-loopback-tests*. 1. Execute the *test ds1-loop UUCSS ds1/csu-loopback-tests* command. 2. If the RLB test continues to fail, then replace the CSU Module. 3. Run this test again.
1313	FAIL	The TN767E circuit pack could not deactivate a CPE Loopback Jack loopback. 1. Execute the *test ds1-loop UUCSS end-loopback/span-test* command. 2. If the attempt to deactivate the CPE Loopback Jack is not successful, check the cabling and investigate the problem at the CPE Loopback Jack. 3. Run the test again.
1314	FAIL	The TN767E circuit pack could not deactivate a far-end CSU loopback. 1. Execute the *test ds1-loop UUCSS end-loopback/span-test* command. 2. If the attempt to deactivate the far-end CSU loopback continues to fail, then escalate the problem.
1320	FAIL	A 120A1 CSU Module hardware failure or I-CSU Serial Interface Audit failure was detected by the TN767E DS1 circuit pack. Replace the ICSU.

Continued on next page

Table 9-113. TEST #138 Loss of Signal Alarm Inquiry Test — *Continued*

Error Code	Test Result	Description/ Recommendation
1321	FAIL	DTE LOS (loss of signal) was detected between the TN767E DS1 board and the 120A1 CSU Module. Either the TN767E board, the 120A1 CSU Module, or the I/O cable between the backplane and the CSU module (or any combination thereof) has failed. Attempt to isolate the problem to one of these areas. 1. Replace the CSU Module and run the test again. 2. If the test continues to fail with this error code, then replace the TN767E board and run the test again. 3. If the test continues to fail with this error code, the problem could be in the I/O cable between the backplane and the CSU module.
1322	FAIL	No 5 volts power detected from the TN767E circuit pack to the 120A1 CSU Module. Problem probably due to an open fuse on the DS1 board or a faulty ICSU. **NOTE** *Do not swap DS1 boards as this may blow the fuse on the new board*. 1. Remove the TN767E from the system and reinsert. 2. Run the test again once the board has finished its reset. 3. If the test continues to fail with this error code, then replace the CSU Module and run the test again. 4. If the test continues to fail with this error code, then replace the TN767E board and run the test again. 5. If the test continues to fail with this error code, the problem could be in the I/O cable between the backplane and the CSU module.
1323	FAIL	A service affecting CSU Module audit failure was detected by the TN767E DS1 circuit pack. All administered ports on the DS1 circuit pack are affected and maintenance software will place the ports into the out-of-service state. 1. Replace the 120A1 CSU Module.

Continued on next page

Table 9-113. TEST #138 Loss of Signal Alarm Inquiry Test — *Continued*

Error Code	Test Result	Description/ Recommendation
1324	FAIL	A non-service affecting CSU Module audit failure was detected by the TN767E DS1 circuit pack. No ports should be affected. No immediate action is required. These errors indicate that the CSU Module hardware may have a problem, and that it should be replaced when practical to avoid further deterioration.
	PASS	DS1 signal is present and the physical link is healthy. In addition, no Integrated CSU errors are detected.
0	NO BOARD	The DS1 Interface circuit pack is not administered. 1. Administer the DS1 Interface circuit pack by issuing the **add ds1 UUCSS** command. 2. Run the test again. 3. If the test continues to return NO BOARD, escalate the problem.

Blue Alarm Inquiry Test (#139)

The Blue Alarm is a signal sent by the remote DS1 endpoint when it is out-of-service. The Blue Alarm Inquiry Test checks the blue alarm status of the remote DS1 endpoint.

When the DS1 Interface circuit pack detects a Blue Alarm signal from the remote DS1 endpoint, the circuit pack will transmit a Yellow alarm to the remote DS1 endpoint and send a BLUE ALARM message to the maintenance software. When the Blue alarm is confirmed, the maintenance software places all trunks of the DS1 Interface circuit pack into the out-of-service state. The inquiry test will be run every 10 minutes until the Blue alarm is cleared.

The DS1 Interface circuit pack takes 2 seconds to recognize and report a Blue alarm and 16 seconds to recognize and report the resolution of a Blue alarm. When the Blue alarm is cleared, the DS1 Interface circuit pack stops transmitting the Yellow alarm and places the trunks back into the service state before the Blue alarm occurs.

Line Loopback Alarm

The Line Loopback (LLB) is used by the remote DS1 endpoint to put the ICSU or DS1 into a loopback mode. When the ICSU or DS1 Board is in the LLB mode, the arriving bit pattern is regenerated and sent back. Line Loopback (LLB) Alarm is activated when the in-band activate LLB bit pattern has been arriving continuously for 5 seconds on the DS1 line. LLB is deactivated when the in-band deactivate LLB bit pattern has been arriving continuously for 5 seconds on the DS1 line.

Since LLB is a maintenance condition rendering all DS0 channels unavailable for signaling or bearer traffic, maintenance software treats this the same as a Blue Alarm.

Payload Loopback Alarm

The Payload Loopback (PLB) is used by the remote DS1 endpoint to put the switch DS1 into a loopback mode. PLB Alarm is activated when a network protocol activate bit pattern arrives over the 4-Kbps ESF data link on the DS1 line. PLB is deactivated when a network protocol deactivate bit pattern arrives over the 4-Kbps ESF data link on the DS1 line.

Since PLB is a maintenance condition rendering all DS0 channels unavailable for signaling or bearer traffic, maintenance software treats this the same as a Blue Alarm

.

Table 9-114. TEST #139 Blue Alarm Inquiry Test

Error Code	Test Result	Description/ Recommendation
	ABORT	Internal System Error
2000	ABORT	Response to the test request was not received within the allowable time period. If Error Type 1538 is present in the Error Log, follow the maintenance strategy recommended for this error type.
2100	ABORT	Could not allocate the necessary system resources to run this test. 1. Retry the command at 1-minute intervals for a maximum of 5 times. 2. If the test continues to abort, escalate the problem.
	FAIL	The remote DS1 endpoint is out-of-service.
1794	FAIL	The DS1 Interface circuit pack detects a Line Loopback Alarm (LLB).
1795	FAIL	The DS1 Interface circuit pack detects a Payload Loopback Alarm (PLB). If the DS1 Interface circuit pack connects to a leased T1 facility, call the vendor of the T1 carrier to diagnose the remote DS1 endpoint. If the DS1 Interface circuit pack connects directly to another DS1 board, call the system technician of the remote switch to diagnose the DS1 endpoint.
	PASS	Remote DS1 endpoint is in-service. Neither a Blue alarm nor a Line Loopback alarm nor a Payload Loopback alarm is detected in the DS1 Interface circuit pack.
0	NO BOARD	The DS1 Interface circuit pack is not administered. 1. Administer the DS1 Interface circuit pack by issuing the **add ds1 UUCSS** command. 2. Run the test again. 3. If the test continues to return NO BOARD, escalate the problem.

Red Alarm Inquiry Test (#140)

DS1 Interface circuit pack raises a Red alarm when the framing pattern of the incoming DS1 bit stream has been lost. The Red Alarm Inquiry Test checks the framing status of a DS1 Interface circuit pack. DS1 Interface circuit pack takes 3 seconds to recognize and report a Red alarm and 10 seconds to recognize and report the resolution of a Red alarm.

When the DS1 Interface circuit pack detects a Red alarm, the circuit pack will transmit a Yellow alarm to the remote DS1 endpoint and send a RED ALARM message to the maintenance software. After the Red alarm is confirmed, the maintenance software places all trunks of the circuit pack into the out-of-service state. The inquiry test will be run every 10 minutes until the Red alarm is cleared.

When the Red alarm is cleared, the DS1 Interface circuit pack will stop transmitting the Yellow alarm to the remote DS1 endpoint. The maintenance software restores all trunks of the DS1 Interface circuit pack to the service state before the Red alarm occurs.

Loss of Multiframe Alarm: If the DS1 Interface circuit pack is administered using DMI-BOS signaling, the DS1 Interface circuit pack raises a Loss of Multiframe Alarm (LMA) when it cannot interpret the incoming signaling bits to synchronize to the multiframe pattern received in the 24th channel. Once DS1 Interface circuit pack detects an LMA, the circuit pack will transmit a Remote Multiframe Alarm (RMA) to the remote DS1 endpoint. Maintenance software handles both Red alarm and LMA alarm(s) using the same mechanism

.

Table 9-115. TEST #139 Red Alarm Inquiry Test

Error Code	Test Result	Description/ Recommendation
	ABORT	Internal System Error 1. Retry the command at 1-minute intervals a maximum of 5 times. 2. If the test continues to abort, escalate the problem.
	FAIL	The DS1 Interface circuit pack detects a Red alarm. An out-of-frame condition occurs on the DS1 Interface circuit pack. DS1 Interface circuit pack will transmit a Yellow alarm to the remote DS1 endpoint until the Red alarm is retired.
1	FAIL	The DS1 Interface circuit pack detects a Loss Multiframe Alarm (LMA). An out-of-frame condition occurs on the DS1 Interface circuit pack. The DS1 Interface circuit pack will transmit a Remote Multiframe Alarm to the remote DS1 endpoint until the LMA is retired. 1. Verify that both endpoints of the DS1 link are administered using the same DMI-BOS signaling mode, framing mode, and line coding. 2. Check the physical connectivity of DS1 Interface circuit packs and cable. 3. Replace the local DS1 Interface circuit pack and repeat the test. 4. Contact T1 Network Service to diagnose the remote DS1 endpoint. 5. If the test still fails, then escalate the problem.
	PASS	No Red alarm is detected on DS1 Interface circuit pack.
0	NO BOARD	The DS1 Interface circuit pack is not administered. 1. Administer the DS1 Interface circuit pack by issuing the **add ds1 UUCSS** command. 2. Run the test again. 3. If the test continues to return NO BOARD, escalate the problem.

Yellow Alarm Inquiry Test (#141)

Receiving a Yellow alarm from remote DS1 endpoint indicates that the remote DS1 endpoint has an out-of-frame condition. The Yellow Alarm Inquiry Test is used to determine whether the remote DS1 endpoint is transmitting a Yellow alarm. The DS1 Interface circuit pack takes 500 msec to recognize and report a Yellow alarm and 500 msec to recognize and report that a Yellow alarm condition is cleared.

When the DS1 Interface circuit pack detects a Yellow alarm from the remote DS1 endpoint, it will send a YELLOW-ALARM uplink message to the maintenance software. After the maintenance software receives the YELLOW-ALARM message, the Yellow Alarm Inquiry Test is run to confirm the Yellow alarm. Once the Yellow alarm is confirmed, the maintenance software places all trunks on the circuit pack into the out-of-service state. The Inquiry Test will be run every 10 minutes until the Yellow alarm is cleared.

When the Yellow alarm is cleared, the maintenance software restores all trunks on the DS1 Interface circuit pack back to their previous service state before the Yellow alarm is raised.

This Yellow Alarm corresponds to the yellow F2 state documented in CCITT recommendation I.431.

Remote Multiframe Alarm: Remote Multiframe Alarm (RMA) indicates that the remote DS1 endpoint is in a Loss of Multiframe Alarm condition while the DS1 Interface circuit pack is administered using the DMI-BOS common channel signaling. The RMA is handled as a Yellow alarm.

Yellow F5 State Alarm: For 32-channel E1 operation with CRC4 on, the F5 fault state is defined as a fault in the user-network interface, specifically in the direction from the user (PBX) to the network. Refer to CCITT recommendation I.431

Table 9-116. TEST #141 Yellow Alarm Inquiry Test

Error Code	Test Result	Description/ Recommendation
	ABORT	Internal System Error 1. Retry the command at 1-minute intervals a maximum of 5 times. 2. If the test continues to abort, escalate the problem.
	FAIL	The DS1 Interface circuit pack detects a Yellow alarm sent by the remote DS1 endpoint. An out-of-frame condition occurs on the remote DS1 endpoint. This corresponds to the yellow F2 state.
1	FAIL	The DS1 Interface circuit pack detects a Remote Multiframe Alarm sent by the remote DS1 endpoint. An out-of-frame condition occurs on the remote DS1 endpoint.
2	FAIL	The DS1 Interface circuit pack is reporting a F5 State alarm. There is a fault in the user-network interface from the user (PBX) to the network. 1. Verify that both endpoints of the DS1 link are administered using the same DMI-BOS signaling mode, framing mode, and line coding. 2. Check the physical connectivity of DS1 Interface circuit packs and cable. 3. Replace the local DS1 Interface circuit pack and repeat the test. 4. Contact T1 Network Service to diagnose the remote DS1 endpoint. 5. If the test still fails, then escalate the problem.

Continued on next page

Table 9-116. TEST #141 Yellow Alarm Inquiry Test — *Continued*

Error Code	Test Result	Description/ Recommendation
	PASS	No Yellow alarm nor Remote Multiframe Alarm nor F5 State Alarm is received from the remote DS1 endpoint.
0	NO BOARD	The DS1 Interface circuit pack is not administered. 1. Administer the DS1 Interface circuit pack by issuing the **add ds1 UUCSS** command. 2. Run the test again. 3. If the test continues to return NO BOARD, escalate the problem.

Major Alarm Inquiry Test (#142)

The Major alarm raised by a DS1 Interface circuit pack indicates that the average bit error rate on the DS1 facility is greater than 1/1000. The Major Alarm Inquiry Test is used to determine that the received DS1 bit error rate is greater than 1/1000. When D4 framing mode is selected, the DS1 Interface circuit pack takes 16 seconds to recognize and report a Major alarm and 16 seconds to recognize and report that a Major alarm condition is cleared. If ESF framing mode is selected, the DS1 Interface circuit pack takes 10 seconds to recognize and report a Major alarm and 10 seconds to recognize and report that a Major alarm condition is cleared.

When the DS1 Interface circuit pack detects a Major alarm, it will send a MAJOR-ALARM message to the maintenance software. After the maintenance software receives a MAJOR-ALARM message, the Major Alarm Inquiry Test is initiated to confirm the Major alarm on the DS1 Interface circuit pack. The Inquiry Test will be run every 10 minutes until the Major alarm is cleared. The maintenance software places all trunks on the circuit pack in the out-of-service state if the Major alarm persists for more than 20 minutes.

When the Major alarm is cleared, the maintenance software restores all trunks on the circuit pack to their previous service state before a Major alarm occurs.

Table 9-117. TEST #142 Major Alarm Inquiry Test

Error Code	Test Result	Description/ Recommendation
	ABORT	Internal System Error
2000	ABORT	Response to the test request was not received within the allowable time period. If Error Type 1538 is present in the Error Log, follow the maintenance strategy recommended for this error type.
2100	ABORT	Could not allocate the necessary system resources to run this test. 1. Retry the command at 1-minute intervals for a maximum of 5 times. 2. If the test continues to abort, escalate the problem.

Continued on next page

Table 9-117. TEST #142 Major Alarm Inquiry Test — *Continued*

Error Code	Test Result	Description/ Recommendation
	FAIL	The DS1 Interface circuit pack detects a Major alarm. The DS1 bit error rate is greater than 1/1000. 1. The performance of DS1 link between DS1 Interface circuit pack and remote DS1 endpoint is very poor. If the DS1 Interface circuit pack is TN767, enter **list measurement ds1-log UUCSS** command to read the error seconds measurement. 2. Verify that both endpoints of the DS1 link are administered using the same signaling mode, framing mode, and line coding. 3. Check the physical connectivity of DS1 Interface circuit packs and cable. 4. Replace the local DS1 Interface circuit pack and repeat the test. 5. Contact T1 Network Service to diagnose the remote DS1 endpoint. 6. If the test still fails, then escalate the problem.
	PASS	No Major alarm is detected in DS1 Interface circuit pack.
0	NO BOARD	The DS1 Interface circuit pack is not administered. 1. Administer the DS1 Interface circuit pack by issuing the **add ds1 UUCSS** command. 2. Run the test again. 3. If the test continues to return NO BOARD, escalate the problem.

Minor Alarm Inquiry Test (#143)

The Minor alarm raised by a DS1 Interface circuit pack indicates that the average bit error rate on the DS1 facility is greater than 1/1,000,000, but less than 1/1000. The Minor Alarm Inquiry Test is used to determine that the received DS1 bit error rate is greater than 1/1,000,000 and less than 1/1000. When D4 framing mode is selected, the DS1 Interface circuit pack takes 41 minutes to recognize and report a Minor alarm and 41 minutes to recognize and report that a Minor alarm condition is cleared. If ESF framing mode is selected, the DS1 Interface circuit pack takes 10 minutes to recognize and report a Minor alarm and 10 minutes to recognize and report that a Minor alarm condition is cleared.

When the DS1 Interface circuit pack detects a Minor alarm condition, it will send a MINOR-ALARM message to the maintenance software. After the maintenance software receives a MINOR-ALARM message, the Minor Alarm Inquiry Test is initiated to confirm the Minor alarm. All trunks on the circuit pack are kept in the in-service state after the Minor alarm is confirmed. The Minor Alarm Inquiry Test is run every 10 minutes until the Minor alarm is cleared.

Table 9-118. TEST #143 Minor Alarm Inquiry Test

Error Code	Test Result	Description/ Recommendation
	ABORT	Internal System Error
2000	ABORT	Response to the test request was not received within the allowable time period. If Error Type 1538 is present in the Error Log, follow the maintenance strategy recommended for this error type.
2100	ABORT	Could not allocate the necessary system resources to run this test. 1. Retry the command at 1-minute intervals for a maximum of 5 times. 2. If the test continues to abort, escalate the problem.

Continued on next page

Table 9-118. TEST #143 Minor Alarm Inquiry Test — *Continued*

Error Code	Test Result	Description/ Recommendation
	FAIL	The DS1 Interface circuit pack detects a Minor alarm. The DS1 bit error rate is greater than 1/1,000,000 and less than 1/1000. 1. The performance of DS1 link between DS1 Interface circuit pack and remote DS1 endpoint is poor. If DS1 Interface circuit pack is TN767, enter **list measurement ds1-log UUCSS** command to read the error seconds measurement. 2. Verify that both endpoints of the DS1 link are administered using the same signaling mode, framing mode, and line coding. 3. Check the physical connectivity of DS1 Interface circuit packs and cable. 4. Replace the local DS1 Interface circuit pack and repeat the test. 5. Contact T1 Network Service to diagnose the remote DS1 endpoint. 6. If the test still fails, then escalate the problem.
	PASS	No Minor alarm is detected in DS1 Interface circuit pack.
0	NO BOARD	The DS1 Interface circuit pack is not administered. 1. Administer the DS1 Interface circuit pack by issuing the **add ds1 UUCSS** command. 2. Run the test again. 3. If the test continues to return NO BOARD, escalate the problem.

Slip Alarm Inquiry Test (144)

Slips occur when transmitter and receiver are not running at precisely the same clock rate. The DS1 Interface circuit pack can detect both positive and negative slips on the DS1 facility. The Slip Alarm Inquiry Test is used to acquire the total number of slips occurred on a DS1 link.

When the DS1 Interface circuit pack detects a slip condition, the circuit pack will increase the on-board slip counter by 1. A SLIP-COUNT message is spontaneously sent to the system software after the counter reaches a threshold (for example, 88). When the maintenance software receives the SLIP-COUNT message, the Slip Alarm Inquiry Test is initiated to query the slip counters on DS1 Interface circuit pack and total the slip counts in the maintenance software.

If the count of slips is over the threshold, a Minor alarm is raised against the DS1 Interface circuit pack. All trunks of the DS1 Interface circuit pack are still in the in-service state. If the DS1 Interface circuit pack is used to supply the system synchronization source, the MINOR alarm will initiate a synchronization source switch. See TDM-BUS (TDM Bus) and SYNC (Synchronization) Maintenance documentation for details.

Table 9-119. TEST #144 Slip Alarm Inquiry Test

Error Code	Test Result	Description/ Recommendation
	ABORT	Internal System Error
2000	ABORT	Response to the test request was not received within the allowable time period. If Error Type 1538 is present in the Error Log, follow the maintenance strategy recommended for this error type.
2100	ABORT	Could not allocate the necessary system resources to run this test. 1. Retry the command at 1-minute intervals for a maximum of 5 times. 2. If the test continues to abort, escalate the problem.

Continued on next page

Table 9-119. TEST #144 Slip Alarm Inquiry Test — *Continued*

Error Code	Test Result	Description/ Recommendation
1 to 88	FAIL	The DS1 Interface circuit pack and the remote DS1 endpoint are not synchronized to the same clock rate. The DS1 Interface circuit pack detects a Slip alarm. The error code equals the number of slips detected by the DS1 Interface circuit pack since the last Slip Alarm Inquiry Test. 1. Retry the command at 1-minute intervals a maximum of 5 times. 2. If the DS1 Interface circuit pack is TN767, enter the **list measurement ds1-log UUCSS** command to read the error seconds measurement. 3. Verify that both endpoints of the DS1 link are administered using the same signaling mode, framing mode, and line coding. 4. Check the physical connectivity of DS1 Interface circuit packs and cable. 5. Replace the local DS1 Interface circuit pack and repeat the test. 6. Contact T1 Network Service to diagnose the remote DS1 endpoint. 7. If the test still fails, then escalate the problem.
	PASS	No Slip alarm is detected on the DS1 Interface circuit pack.
0	NO BOARD	The DS1 Interface circuit pack is not administered. 1. Administer the DS1 Interface circuit pack by issuing the **add ds1 UUCSS** command. 2. Run the test again. 3. If the test continues to return NO BOARD, escalate the problem.

Misframe Alarm Inquiry Test (#145)

Misframe Alarm indicates that framing bits observed on a DS1 Interface circuit pack are in error. Misframe Alarm Inquiry Test queries the total number of misframes that have occurred on a DS1 Interface circuit pack since the last inquiry.

When the DS1 Interface circuit pack detects a misframe error, it will increase its misframe counter by 1. If the counter reaches the threshold, a MISFRAME-COUNT message is automatically sent to the switch maintenance software. After the maintenance software receives the MISFRAME-COUNT message, the Misframe Alarm Inquiry Test is initiated to collect the misframe counts from the DS1 Interface circuit pack.

When the threshold of misframes is reached, if the DS1 Interface circuit pack is supplying the system synchronization source, then a switching synchronization source message is sent to the TDM Bus Clock. See TDM-BUS (TDM Bus) Maintenance documentation for details. A Minor alarm against the DS1 Interface circuit pack is raised, but all trunks of the DS1 Interface circuit pack are still in the in-service state.

Table 9-120. TEST #145 Misframe Alarm Inquiry Test

Error Code	Test Result	Description/ Recommendation
	ABORT	Internal System Error
2000	ABORT	Response to the test request was not received within the allowable time period. If Error Type 1538 is present in the Error Log, follow the maintenance strategy recommended for this error type.
2100	ABORT	Could not allocate the necessary system resources to run this test. 1. Retry the command at 1-minute intervals for a maximum of 5 times. 2. If the test continues to abort, escalate the problem.

Continued on next page

Table 9-120. TEST #145 Misframe Alarm Inquiry Test — *Continued*

Error Code	Test Result	Description/ Recommendation
1 to 17	FAIL	The DS1 Interface circuit pack detects errors in the received framing bits pattern. The error code equals the number of slips detected by the DS1 Interface circuit pack since the last Slip Alarm Inquiry Test. 1. Retry the command at 1-minute intervals a maximum of 5 times. 2. Read the error seconds measurement. 3. Verify that both endpoints of the DS1 link are administered using the same signaling mode, framing mode, and line coding. 4. Check the physical connectivity of DS1 Interface circuit packs and cable. 5. Replace the local DS1 Interface circuit pack and repeat the test. 6. Contact T1 Network Service to diagnose the remote DS1 endpoint. 7. If the test still fails, then escalate the problem.
	PASS	No Misframe alarm is detected on the DS1 Interface circuit pack.
0	NO BOARD	The DS1 Interface circuit pack is not administered. 1. Administer the DS1 Interface circuit pack by issuing the **add ds1 UUCSS** command. 2. Run the test again. 3. If the test continues to return NO BOARD, escalate the problem.

Translation Update Test (#146)

The Translation Update Test sends the circuit-pack-level information specified by System Administration to the DS1 Interface circuit pack. Translation includes the following data administered for a DS1 Interface circuit pack (see output of **display ds1 UUCSS** command): DS1 Link Length between two DS1 endpoints, Synchronization Source Control, All Zero Suppression, Framing Mode, Signaling Mode, Time Slot Number of 697-Hz Tone, Time Slot Number of 700-Hz Tone, etc.

In G3V3, if a TN767E or later DS1 circuit pack is combined with an AT&T 120A1 CSU Module to form and Integrated CSU Module, this test will also send the administration for this Integrated CSU to the circuit pack to assure the board's translations are correct. The administration of the CSU Module is done using the DS1 circuit pack administration form. Translation for the CSU Module includes the following data: Transmit LBO, Receive ALBO, Supply CPE Loopback Jack Power?, etc.

Table 9-121. TEST #146 Translation Update Test

Error Code	Test Result	Description/ Recommendation
	ABORT	Internal System Error 1. Retry the command at 1-minute intervals a maximum of 5 times. 2. If the test continues to abort, escalate the problem.
	FAIL	Internal system software error. 1. Enter the **display ds1 UUCSS** command to verify the DS1 Interface circuit pack translation. 2. If the test continues to fail, escalate the problem.
	PASS	Translation data has been downloaded to the DS1 Interface circuit pack successfully.
0	NO BOARD	The DS1 Interface circuit pack is not administered. 1. Administer the DS1 Interface circuit pack by issuing the **add ds1 UUCSS** command. 2. Run the test again. 3. If the test continues to return NO BOARD, escalate the problem.

DS1 Board Loopback Test (#1209)

This test is destructive.

The DS1 Board Loopback (BLB) Test causes a loopback at the TN767E DS1 board edge and tests DS1 board internal circuitry.

The test is destructive and can only be initiated by a system technician demanded *test ds1-loop UUCSS ds1/csu-loopback-tests* command.

All trunks or ports on the DS1 Interface circuit pack must be busied out via the system technician **busyout board** command before running the BLB Test.

When the BLB Test is initiated, maintenance software sends an appropriate message to the TN767E DS1 Interface circuit pack to start the test. The board will set up the BLB loopback, transmit a test pattern, and verify that the pattern is received unaltered through the loopback. If the transmitted and received pattern is different, the test fails.

When the test is complete, all trunks or ports on the TN767E DS1 Interface circuit pack are restored to the in-service state after the **release board** command is entered

Table 9-122. TEST #1209 DS1 Board Loopback Test

Error Code	Test Result	Description/ Recommendation
	ABORT	Internal System Error 1. Retry the *test ds1-loop UUCSS ds1/csu-loopback-tests* command at 1-minute intervals a maximum of 5 times. 2. If the test continues to abort, escalate the problem.
1005	ABORT	DS1 Board Loopback Test cannot be executed in the current configuration. To run this Test, the TN767E or later suffix DS1 must be administered for 24-channel operation. The "Bit Rate" field on the DS1 circuit pack administration form must be set to "1.544" for 24-channel operation.

Continued on next page

Table 9-122. TEST #1209 DS1 Board Loopback Test — *Continued*

Error Code	Test Result	Description/ Recommendation
1015	ABORT	Ports on the DS1 Interface circuit pack have not been busied out to out-of-service. 1. Enter the **busyout board UUCSS** command to put all trunks or ports of the DS1 Interface circuit pack into the out-of-service state. 2. Retry the command. 3. If the test continues to abort, escalate the problem.
1039	ABORT	The DS1 Interface circuit pack is providing timing for the system. Executing this test could cause major system disruption.) If the DS1 Interface circuit pack needs to be tested, set the synchronization reference to another DS1 Interface circuit pack or to the Tone-Clock circuit pack via the following command sequence: 1. Issue the **disable synchronization-switch** command. 2. Next, issue the **set synchronization UUCSS** command. 3. Lastly, issue the **enable synchronization-switch** command.
1950	ABORT	Another loopback/span test is already executing on the DS1 board or the board is in a network requested loopback mode (Line loopback or Payload loopback). The hardware error log will indicate whether a Customer Loopback Jack Test, Far CSU Loopback Test, or the One-Way Span Test is executing or if the board is in line loopback or payload loopback mode. Only one long-duration loopback/span test can be active at a given time. Thus, if a loopback/span test is already active, that test must be terminated via the *test ds1-loop UUCSS end-loopback/span-test* command in order to execute this test.
2000	ABORT	Response to the test request was not received within the allowable time period. If Error Type 1538 is present in the Error Log, follow the maintenance strategy recommended for this error type.

Continued on next page

Table 9-122. TEST #1209 DS1 Board Loopback Test — *Continued*

Error Code	Test Result	Description/ Recommendation
2100	ABORT	Could not allocate the necessary system resources to run this test. 1. Retry the command at 1-minute intervals for a maximum of 5 times. 2. If the test continues to abort, escalate the problem.
	FAIL	DS1 Interface circuit pack failed the DS1 Board Loopback Test. 1. Retry the *test ds1-loop UUCSS ds1/csu-loopback-tests* command. 2. If the BLB test continues to fail, then replace the DS1 circuit pack.
	PASS	The BLB test executed successfully. The test pattern was transmitted and received successfully up to the TN767E DS1 board edge.
0	NO BOARD	The DS1 Interface circuit pack is not administered. 1. Administer the DS1 Interface circuit pack by issuing the **add ds1 UUCSS** command. 2. Run the test again. 3. If the test continues to return NO BOARD, escalate the problem.

CSU Equipment Loopback Test (#1210)

This test is destructive.

The CSU Equipment Loopback (ELB) Test causes a loopback at the near-edge of the local AT&T 120A CSU Module and tests the connection from the TN767E DS1 board to the CSU Module (DS1 board edge interconnecting cable, and CSU Module edge). This test will only be performed if the AT&T 120A CSU Module is present, administered, and connected to a 1.544Mbps TN767E DS1 circuit pack on the back of the port carrier.

The test is destructive and can only be initiated by a system technician demanded *test ds1-loop UUCSS ds1/csu-loopback-tests* command.

All trunks or ports on the DS1 Interface circuit pack must be busied out via the system technician **busyout board** command before running the ELB Test.

When the ELB Test is initiated, maintenance software sends an appropriate message to the TN767E DS1 Interface circuit pack to start the test. The board will set up the ELB loopback, transmit a test pattern, and verify that the pattern is received unaltered through the loopback. If the transmitted and received pattern is different, the test fails.

In addition, the DS1 circuit pack hardware applies a DC current while the test is running in order to detect any broken wires which may not be detected by the loopback pattern.

When the test is complete, all trunks or ports on the TN767E DS1 Interface circuit pack are restored to the in-service state after the **release board** command is entered

Table 9-123. TEST #1210 CSU Equipment Loopback Test

Error Code	Test Result	Description/ Recommendation
	ABORT	Internal System Error 1. Retry the *test ds1-loop UUCSS ds1/csu-loopback-tests* command at 1-minute intervals a maximum of 5 times. 2. If the test continues to abort, escalate the problem.
1005	ABORT	CSU Equipment Loopback Test cannot be executed in the current configuration. To run this test, the *Near-End CSU Type* field on the DS1 circuit pack administration form must be set to *integrated* and the "Bit Rate" field must be set to "1.544" (24-channel operation). 1. Use the **change ds1 UUCSS** command to set the *Near-End CSU Type* field on the DS1 circuit pack administration form to *integrated*, and/or change the "Bit Rate" field to "1.544" if the board is to be used in the 24-channel configuration. 2. Retry the *test ds1-loop UUCSS ds1/csu-loopback-tests* command. 3. If the test continues to abort, escalate the problem.
1015	ABORT	Ports on the DS1 Interface circuit pack have not been busied out to out-of-service. 1. Enter the **busyout board UUCSS** command to put all trunks or ports of the DS1 Interface circuit pack into the out-of-service state. 2. Retry the command. 3. If the test continues to abort, escalate the problem.

Continued on next page

Table 9-123. TEST #1210 CSU Equipment Loopback Test — *Continued*

Error Code	Test Result	Description/ Recommendation
1039	ABORT	The DS1 Interface circuit pack is providing timing for the system. Executing this test could cause major system disruption. If the DS1 Interface circuit pack needs to be tested, set the synchronization reference to another DS1 Interface circuit pack or to the Tone-Clock circuit pack via the following command sequence: 1. Issue the **disable synchronization-switch** command. 2. Next, issue the **set synchronization UUCSS** command. 3. Lastly, issue the **enable synchronization-switch** command.
1950	ABORT	Another loopback/span test is already executing on the DS1 board or the board is in a network requested loopback mode (Line loopback or Payload loopback). The hardware error log will indicate whether a Customer Loopback Jack Test, Far CSU Loopback Test, or the One-Way Span Test is executing or if the board is in line loopback or payload loopback mode. Only one long-duration loopback/span test can be active at a given time. Thus, if a loopback/span test is already active, that test must be terminated via the *test ds1-loop UUCSS end-loopback/span-test* command in order to execute this test.
1951	ABORT	The CSU Equipment Loopback Test could not be executed because the 120A1 CSU Module was not physically installed. Physically connect the 120A1 CSU Module to the TN767E board on the back of the port carrier.
2000	ABORT	Response to the test request was not received within the allowable time period. If Error Type 1538 is present in the Error Log, follow the maintenance strategy recommended for this error type.

Continued on next page

Table 9-123. TEST #1210 CSU Equipment Loopback Test — *Continued*

Error Code	Test Result	Description/ Recommendation
2100	ABORT	Could not allocate the necessary system resources to run this test. 1. Retry the command at 1-minute intervals for a maximum of 5 times. 2. If the test continues to abort, escalate the problem.
	FAIL	DS1 Interface circuit pack failed the CSU Equipment Loopback Test. 1. Retry the *test ds1-loop UUCSS ds1/csu-loopback-tests* command. 2. If the ELB test continues to fail, then either the TN767E board, the CSU Module, or the I/O cable between the backplane and the CSU module (or any combination thereof) has failed. Attempt to isolate the problem to one of these areas. Begin by replacing the CSU Module and running the *test ds1-loop UUCSS ds1/csu-loopback-tests* command again. 3. If the ELB test continues to fail, then replace the TN767E board and run the *test ds1-loop UUCSS ds1/csu-loopback-tests* command again. 4. If the ELB test continues to fail, the problem could be in the I/O cable between the backplane and the CSU module.
	PASS	The ELB test executed successfully. The test pattern was transmitted and received successfully over the connection from the TN767E DS1 board to the near-edge of the 120A1 CSU Module.
0	NO BOARD	The DS1 Interface circuit pack is not administered. 1. Administer the DS1 Interface circuit pack by issuing the **add ds1 UUCSS** command. 2. Run the test again. 3. If the test continues to return NO BOARD, escalate the problem.

CSU Repeater Loopback Test (#1211)

This test is destructive.

The CSU Repeater Loopback (RLB) Test causes a loopback at the far-edge of the local AT&T 120A1 CSU Module and tests the connection from the TN767E DS1 board to and including the CSU Module circuitry. This test will only be performed if the AT&T 120A1 CSU Module is present, administered, and connected to a 1.544 Mbps TN767E DS1 circuit pack on the back of the port carrier.

The test is destructive and can only be initiated by a system technician demanded *test ds1-loop UUCSS ds1/csu-loopback-tests* command.

All trunks or ports on the DS1 Interface circuit pack must be busied out via the system technician **busyout board** command before running the RLB Test.

When the RLB Test is initiated, maintenance software sends an appropriate message to the TN767E DS1 Interface circuit pack to start the test. The board will set up the RLB loopback, transmit a test pattern, and verify that the pattern is received unaltered through the loopback. If the transmitted and received pattern is different, the test fails.

In addition, the DS1 circuit pack hardware applies a DC current while the test is running in order to detect any broken wires which may not be detected by the loopback pattern.

When the test is complete, all trunks or ports on the TN767E DS1 Interface circuit pack are restored to the in-service state after the **release board** command is entered

Table 9-124. TEST #1211 CSU Repeater Loopback Test

Error Code	Test Result	Description/ Recommendation
	ABORT	Internal System Error 1. Retry the *test ds1-loop UUCSS ds1/csu-loopback-tests* command at 1-minute intervals a maximum of 5 times. 2. If the test continues to abort, escalate the problem.
1005	ABORT	CSU Repeater Loopback Test cannot be executed in the current configuration. To run this test, the *Near-End CSU Type* field on the DS1circuit pack administration form must be set to *integrated* and the "Bit Rate" field on the DS1 circuit pack administration form must be set to "1.544" (24-channel configuration). 1. Use the **change ds1 UUCSS** command to set the *Near-End CSU Type* field on the DS1 circuit pack administration form to *integrated*, and/or change the "Bit Rate" field to "1.544" if the board is to be used in 24-channel configuration. 2. Retry the *test ds1-loop UUCSS ds1/csu-loopback-tests* command. 3. If the test continues to abort, escalate the problem.
1015	ABORT	Ports on the DS1 Interface circuit pack have not been busied out to out-of-service. 1. Enter the **busyout board UUCSS** command to put all trunks or ports of the DS1 Interface circuit pack into the out-of-service state. 2. Retry the command. 3. If the test continues to abort, escalate the problem.

Continued on next page

Table 9-124. TEST #1211 CSU Repeater Loopback Test — *Continued*

Error Code	Test Result	Description/ Recommendation
1039	ABORT	The DS1 Interface circuit pack is providing timing for the system. Executing this test could cause major system disruption. If the DS1 Interface circuit pack needs to be tested, set the synchronization reference to another DS1 Interface circuit pack or to the Tone-Clock circuit pack via the following command sequence: 1. Issue the **disable synchronization-switch** command. 2. Next, issue the **set synchronization UUCSS** command. 3. Lastly, issue the **enable synchronization-switch** command.
1950	ABORT	Another loopback/span test is already executing on the DS1 board or the board is in a network requested loopback mode (Line loopback or Payload loopback). The hardware error log will indicate whether a Customer Loopback Jack Test, Far CSU Loopback Test, or the One-Way Span Test is executing or if the board is in line loopback or payload loopback mode. Only one long-duration loopback/span test can be active at a given time. Thus, if a loopback/span test is already active, that test must be terminated via the *test ds1-loop UUCSS end-loopback/span-test* command in order to execute this test.
1951	ABORT	The CSU Repeater Loopback Test could not be executed because the 120A1 CSU Module was not physically installed. Physically connect the 120A1 CSU Module to the TN767E board on the back of the port carrier.

Continued on next page

Table 9-124. TEST #1211 CSU Repeater Loopback Test — *Continued*

Error Code	Test Result	Description/ Recommendation
2000	ABORT	Response to the test request was not received within the allowable time period. If Error Type 1538 is present in the Error Log, follow the maintenance strategy recommended for this error type.
2100	ABORT	Could not allocate the necessary system resources to run this test. 1. Retry the command at 1-minute intervals for a maximum of 5 times. 2. If the test continues to abort, escalate the problem.
	FAIL	DS1 Interface circuit pack failed the CSU Repeater Loopback Test. 1. Retry the *test ds1-loop UUCSS ds1/csu-loopback-tests* command. 2. If the RLB test continues to fail, and the CSU Equipment Loopback Test (#1210) passed, then replace the CSU Module.
	PASS	The RLB test executed successfully. The test pattern was transmitted and received successfully over the connection from the TN767E DS1 board to the far-edge of the 120A1 CSU Module.
0	NO BOARD	The DS1 Interface circuit pack is not administered. 1. Administer the DS1 Interface circuit pack by issuing the **add ds1 UUCSS** command. 2. Run the test again. 3. If the test continues to return NO BOARD, escalate the problem.

CPE Loopback Jack Test (#1212)

This test is destructive.

The CPE Loopback Jack (CLJ-LB) Test causes a loopback at the CPE Loopback Jack and tests the building wiring connection between the TN767E DS1 board and the CPE Loopback Jack.

The test is highly destructive and can only be initiated by a system technician demanded *test ds1-loop UUCSS cpe-loopback-jack-test-begin [number-of-bits bit-pattern]* command. The System technician has the choice of entering a loopback activation code on the command line or using the default code (0x47F).

All trunks or ports on the DS1 Interface circuit pack must be busied out via the system technician **busyout board** command before running the CPE Loopback Jack Test.

The CPE Loopback Jack Test has the TN767E DS1 Interface circuit pack transmit a loopback activation code to the CPE Loopback Jack, waits up to 10 seconds for return of the code to verify the loopback has been established, transmits a framed 3-in-24 test pattern, begins counting bit errors in the received test pattern, and returns a PASS result to indicate that the pattern was successfully sent. If the loopback is not established within the 10 seconds, the test returns FAIL.

The status of the CPE Loopback Jack test will be available in the hardware error log via error type 3900. Several distinct aux values will be used to give the user information of the status of the test.

The *list measurements ds1 summary* command will display the length of time the test has been running (*Test Duration* field) and number of bit errors detected (*Loopback/Span Test Bit-Error Count* field). If the test pattern is being passed through the loopback cleanly, the number of bit errors should be very low. The command will also display the type of loopback/span test executing (*Test* field), the type of pattern generated for the loopback/span test (*Pattern* field), and whether the pattern (*i.e.3-in-24 Pattern*) is synchronized (*Synchronized Field*).

To terminate the test, enter the *test ds1-loop UUCSS end-loopback/span-test* command or the **release board** command. Using the **release board** command will restore all trunks or ports on the TN767E DS1 Interface circuit pack to the in-service state.

Table 9-125. TEST #1212 CPE Loopback Jack Test

Error Code	Test Result	Description/ Recommendation
	ABORT	Internal System Error 1. Retry the *test ds1-loop UUCSS cpe-loopback-jack-test-begin* command at 1-minute intervals a maximum of 5 times. 2. If the test continues to abort, escalate the problem.
1005	ABORT	CPE Loopback Jack Test cannot be executed in the current configuration. To run this Test, the TN767E or later suffix DS1 must be administered for 24-channel operation. The "Bit Rate" field on the DS1 circuit pack administration form must be set to "1.544" for 24-channel operation.
1015	ABORT	Ports on the DS1 Interface circuit pack have not been busied out to out-of-service. 1. Enter the **busyout board UUCSS** command to put all trunks or ports of the DS1 Interface circuit pack into the out-of-service state. 2. Retry the command. 3. If the test continues to abort, escalate the problem.
1039	ABORT	The DS1 Interface circuit pack is providing timing for the system. Executing this test could cause major system disruption. If the DS1 Interface circuit pack needs to be tested, set the synchronization reference to another DS1 Interface circuit pack or to the Tone-Clock circuit pack via the following command sequence: 1. Issue the **disable synchronization-switch** command. 2. Next, issue the **set synchronization UUCSS** command. 3. Lastly, issue the **enable synchronization-switch** command.

Continued on next page

Table 9-125. TEST #1212 CPE Loopback Jack Test — *Continued*

Error Code	Test Result	Description/ Recommendation
1950	ABORT	Another loopback/span test is already executing on the DS1 board or the board is in a network requested loopback mode (Line loopback or Payload loopback). The hardware error log will indicate whether a Customer Loopback Jack Test, Far CSU Loopback Test, or the One-Way Span Test is executing or if the board is in line loopback or payload loopback mode. Only one long-duration loopback/span test can be active at a given time. Thus, if a loopback/span test is already active, that test must be terminated via the *test ds1-loop UUCSS end-loopback/span-test* command in order to execute this test.
2000	ABORT	Response to the test request was not received within the allowable time period. If Error Type 1538 is present in the Error Log, follow the maintenance strategy recommended for this error type.
2100	ABORT	Could not allocate the necessary system resources to run this test. 1. Retry the command at 1-minute intervals for a maximum of 5 times. 2. If the test continues to abort, escalate the problem.
2	FAIL	The CPE Loopback Jack Test was not set up properly. The DS1 Interface circuit pack could not successfully put the CPE Loopback Jack into loopback mode.

Continued on next page

Table 9-125. TEST #1212 CPE Loopback Jack Test — *Continued*

Error Code	Test Result	Description/ Recommendation
3	FAIL	The CPE Loopback Jack Test was not set up properly. The framed 3-in-24 test pattern, generated by the DS1 Interface circuit pack and looped back through the CPE Loopback Jack, could not be detected properly by the DS1 circuit pack. 1. Retry the *test ds1-loop UUCSS cpe-loopback-jack-test-begin* command. 2. If the CPE Loopback test continues to fail, the problem could be with the TN767E board, the CPE Loopback Jack equipment, or somewhere in between. Run the *test ds1-loop UUCSS ds1/csu-loopback-tests* command to see if the loopback tests closer to the TN767E board are successful. If any of those loopback tests fail, follow the maintenance strategy associated with those loopbacks. Otherwise, escalate the problem.
	PASS	The CPE Loopback Jack test has successfully began executing. The test will continue to run until the system technician enters the *test ds1-loop UUCSS end-loopback/span-test* command or the *release board UUCSS* command.
0	NO BOARD	The DS1 Interface circuit pack is not administered. 1. Administer the DS1 Interface circuit pack by issuing the **add ds1 UUCSS** command. 2. Run the test again. 3. If the test continues to return NO BOARD, escalate the problem.

Far CSU Loopback Test (#1213)

This test is destructive.

The Far CSU Loopback (R-LLB) Test causes a loopback at the far-end CSU and tests all circuitry and facilities from the local TN767E DS1 board to the far-end CSU.

The test is destructive and can only be initiated by a system technician demanded *test ds1-loop UUCSS far-csu-loopback-test-begin* command.

All trunks or ports on the DS1 Interface circuit pack must be busied out via the system technician **busyout board** command before running the Far CSU Loopback Test.

If the far-end CSU is not an AT&T 120A1 CSU Module, and the DS1 is administered for ami-zcs line coding, one's density protection must be disabled on the CSU during the test due to the large number of zero's in the 3-in-24 test pattern.

The Far CSU Loopback Test has the TN767E DS1 Interface circuit pack transmit a loopback activation code to the remote CSU, waits up to 15 seconds for return of the code to verify the loopback has been established, transmits a framed 3-in-24 test pattern, begins counting bit errors in the received test pattern, and returns a PASS result. If the loopback is not established within the 15 seconds, the test fails.

The status of the Far CSU Loopback test will be available in the hardware error log via error type 3901. Several distinct aux values will be used to give the user information of the status of the test.

The *list measurements ds1 summary* command will display the length of time the test has been running (*Test Duration* field) and number of bit errors detected (*Loopback/Span Test Bit-Error Count* field). If the test pattern is being passed through the loopback cleanly, the number of bit errors should be very low. The command will also display the type of loopback/span test executing (*Test* field), the type of pattern generated for the loopback/span test (*Pattern* field), and whether the pattern (*i.e. 3-in-24 Pattern*) is synchronized (*Synchronized* field).

To terminate the test, enter the *test ds1-loop UUCSS end-loopback/span-test* command or the **release board** command. Using the **release board** command will restore all trunks or ports on the TN767E DS1 Interface circuit pack to the in-service state.

Table 9-126. TEST #1213 Far CSU Loopback Test

Error Code	Test Result	Description/ Recommendation
	ABORT	Internal System Error 1. Retry the *test ds1-loop UUCSS far-csu-loopback-test-begin* command at 1-minute intervals a maximum of 5 times. 2. If the test continues to abort, escalate the problem.
1005	ABORT	Far CSU Loopback Test cannot be executed in the current configuration. To run this, the TN767E or later suffix DS1 must be administered for 24-channel operation. The "Bit Rate" field on the DS1 circuit pack administration form must be set to "1.544" for 24-channel operation.
1015	ABORT	Ports on the DS1 Interface circuit pack have not been busied out to out-of-service. 1. Enter the **busyout board UUCSS** command to put all trunks or ports of the DS1 Interface circuit pack into the out-of-service state. 2. Retry the command. 3. If the test continues to abort, escalate the problem.
1039	ABORT	The DS1 Interface circuit pack is providing timing for the system. Executing this test could cause major system disruption. If the DS1 Interface circuit pack needs to be tested, set the synchronization reference to another DS1 Interface circuit pack or to the Tone-Clock circuit pack via the following command sequence: 1. Issue the **disable synchronization-switch** command. 2. Next, issue the **set synchronization UUCSS** command. 3. Lastly, issue the **enable synchronization-switch** command.

Continued on next page

Table 9-126. TEST #1213 Far CSU Loopback Test — *Continued*

Error Code	Test Result	Description/ Recommendation
1950	ABORT	Another loopback/span test is already executing on the DS1 board or the board is in a network requested loopback mode (Line loopback or Payload loopback). The hardware error log will indicate whether a Customer Loopback Jack Test, Far CSU Loopback Test, or the One-Way Span Test is executing or if the board is in line loopback or payload loopback mode. Only one long-duration loopback/span test can be active at a given time. Thus, if a loopback/span test is already active, that test must be terminated via the *test ds1-loop UUCSS end-loopback/span-test* command in order to execute this test.
2000	ABORT	Response to the test request was not received within the allowable time period. If Error Type 1538 is present in the Error Log, follow the maintenance strategy recommended for this error type.
2100	ABORT	Could not allocate the necessary system resources to run this test. 1. Retry the command at 1-minute intervals for a maximum of 5 times. 2. If the test continues to abort, escalate the problem.
2	FAIL	The Far CSU Loopback Test was not set up properly. The DS1 Interface circuit pack could not successfully put the far-end CSU into loopback mode.

Continued on next page

Table 9-126. TEST #1213 Far CSU Loopback Test — *Continued*

Error Code	Test Result	Description/ Recommendation
3	FAIL	The Far CSU Loopback Test was not set up properly. The framed 3-in-24 test pattern, generated by the DS1 Interface circuit pack and looped back through the far-end CSU, could not be detected properly by the DS1 circuit pack. 1. Retry the *test ds1-loop UUCSS far-csu-loopback-test-begin* command. 2. If the Far CSU Loopback test continues to fail with this error code, the problem could be with the TN767E board, the far-end CSU equipment, or somewhere in between. Run the *test ds1-loop UUCSS cpe-loopback-jack-test-begin* command to see if the CPE Loopback Jack Loopback test which is closer to the TN767E board is successful. (If a CPE Loopback Jack device is not being used, then run the *test ds1-loop UUCSS ds1/csu-loopback-tests* command to see if these even closer loopback tests succeed). If the closer loopback test fails, follow the maintenance strategy associated with that loopback. Otherwise, escalate the problem.
	PASS	The Far CSU Loopback test has successfully began executing. The test will continue to run until the system technician enters the *test ds1-loop UUCSS end-loopback/span-test* command or the *release board UUCSS* command.
0	NO BOARD	The DS1 Interface circuit pack is not administered. 1. Administer the DS1 Interface circuit pack by issuing the **add ds1 UUCSS** command. 2. Run the test again. 3. If the test continues to return NO BOARD, escalate the problem.

One-Way Span Test (#1214)

This test is destructive.

The One-Way Span Test allows one-way span testing to and from remote test equipment or another DEFINITY communications system. This will test all circuitry and facilities from the local TN767E DS1 board to the remote test equipment or other DEFINITY communications system.

The test is destructive and can only be initiated by a system technician demanded *test ds1-loop UUCSS one-way-span-test-begin* command.

All trunks or ports on the DS1 Interface circuit pack must be busied out via the system technician **busyout board** command before running the One-Way Span Test.

The One-Way Span Test has the TN767E DS1 Interface circuit pack transmit a framed 3-in-24 test pattern and attempt to receive and verify the pattern. If the TN767E board receives a framed 3-in-24 test pattern sent from another DEFINITY G3V3 or test equipment at the far-end of the DS1, it will begin counting bit errors within the received pattern.

The status of the One-Way Span test will be available in the hardware error log via error type 3902. Several distinct aux values will be used to give the user information of the status of the test.

The *list measurements ds1 summary* command will display the length of time the test has been running (*Test Duration* field) and number of bit errors detected (*Loopback/Span Test Bit-Error Count* field). If the test pattern is being sent cleanly over the span from the far-end, the number of bit errors should be very low. The *Test Duration* field will show *0* until the test pattern is received from the far-end. Upon receiving the test pattern, the board will begin calculating the test duration and number of bit errors. The command will also display the type of loopback/span test executing (*Test* field), the type of pattern generated for the loopback/span test (*Pattern* field), and whether the pattern (*i.e. 3-in-24 Pattern*) is synchronized (*Synchronized* field).

To terminate the test, enter the *test ds1-loop UUCSS end-loopback/span-test* command or the **release board** command. Using the **release board** command will restore all trunks or ports on the TN767E DS1 Interface circuit pack to the in-service state.

Table 9-127. TEST #1214 One-Way Span Test

Error Code	Test Result	Description/ Recommendation
	ABORT	Internal System Error 1. Retry the *test ds1-loop UUCSS one-way-span-test-begin* command at 1-minute intervals a maximum of 5 times. 2. If the test continues to abort, escalate the problem.
1005	ABORT	One-Way Span Test cannot be executed in the current configuration. To run this, the TN767E or later suffix DS1 must be administered for 24-channel operation. The "Bit Rate" field on the DS1 circuit pack administration form must be set to "1.544" for 24-channel operation.
1015	ABORT	Ports on the DS1 Interface circuit pack have not been busied out to out-of-service. 1. Enter the **busyout board UUCSS** command to put all trunks or ports of the DS1 Interface circuit pack into the out-of-service state. 2. Retry the command. 3. If the test continues to abort, escalate the problem.
1039	ABORT	The DS1 Interface circuit pack is providing timing for the system. Executing this test could cause major system disruption. If the DS1 Interface circuit pack needs to be tested, set the synchronization reference to another DS1 Interface circuit pack or to the Tone-Clock circuit pack via the following command sequence: 1. Issue the **disable synchronization-switch** command. 2. Next, issue the **set synchronization UUCSS** command. 3. Lastly, issue the **enable synchronization-switch** command.

Continued on next page

Table 9-127. TEST #1214 One-Way Span Test — *Continued*

Error Code	Test Result	Description/ Recommendation
1950	ABORT	Another loopback/span test is already executing on the DS1 board or the board is in a network requested loopback mode (Line loopback or Payload loopback). The hardware error log will indicate whether a Customer Loopback Jack Test, Far CSU Loopback Test, or the One-Way Span Test is executing or if the board is in line loopback or payload loopback mode. Only one long-duration loopback/span test can be active at a given time. Thus, if a loopback/span test is already active, that test must be terminated via the *test ds1-loop UUCSS end-loopback/span-test* command in order to execute this test.
2000	ABORT	Response to the test request was not received within the allowable time period. If Error Type 1538 is present in the Error Log, follow the maintenance strategy recommended for this error type.
2100	ABORT	Could not allocate the necessary system resources to run this test. 1. Retry the command at 1-minute intervals for a maximum of 5 times. 2. If the test continues to abort, escalate the problem.
	PASS	The One-Way Span test has successfully began transmitting a framed 3-in-24 test pattern. The test will continue to run until the system technician enters the *test ds1-loop UUCSS end-loopback/span-test* command or the *release board UUCSS* command.
0	NO BOARD	The DS1 Interface circuit pack is not administered. 1. Administer the DS1 Interface circuit pack by issuing the **add ds1 UUCSS** command. 2. Run the test again. 3. If the test continues to return NO BOARD, escalate the problem.

Inject Single Bit Error Test (#1215)

This test is destructive.

The Inject Single Bit Error Test will cause a single bit error to be sent within an active framed 3-in-24 test pattern.

The test is highly destructive and can only be initiated by a system technician demanded *test ds1-loop UUCSS inject-single-bit-error* command. An attempt to use this command will be rejected if none of the three long-duration DS1 loopback/span tests (CPE Loopback Jack Test, Far CSU Loopback Test, One-Way Span Test) are active on a TN767E circuit pack.

All trunks or ports on the DS1 Interface circuit pack must be busied out via the system technician **busyout board** command before running the Inject Single Bit Error Test.

The *list measurements ds1 summary* command displays the number of bit errors detected (*Loopback/Span Test Bit-Error Count* field). Injecting this single bit error should increment the bit error count of the loopback/span test by one.

Table 9-128. TEST #1215 Inject Single Bit Error Test

Error Code	Test Result	Description/ Recommendation
	ABORT	Internal System Error 1. Retry the *test ds1-loop UUCSS inject-single-bit-error* command at 1-minute intervals a maximum of 5 times. 2. If the test continues to abort, escalate the problem.
1015	ABORT	Ports on the DS1 Interface circuit pack have not been busied out to out-of-service. 1. Enter the **busyout board UUCSS** command to put all trunks or ports of the DS1 Interface circuit pack into the out-of-service state. 2. Retry the command. 3. If the test continues to abort, escalate the problem.
2000	ABORT	Response to the test request was not received within the allowable time period. If Error Type 1538 is present in the Error Log, follow the maintenance strategy recommended for this error type.

Continued on next page

Table 9-128. TEST #1215 Inject Single Bit Error Test — *Continued*

Error Code	Test Result	Description/ Recommendation
2100	ABORT	Could not allocate the necessary system resources to run this test. 1. Retry the command at 1-minute intervals for a maximum of 5 times. 2. If the test continues to abort, escalate the problem.
	PASS	A single bit error has been successfully injected into an active framed 3-in-24 test pattern.
0	NO BOARD	The DS1 Interface circuit pack is not administered. 1. Administer the DS1 Interface circuit pack by issuing the **add ds1 UUCSS** command. 2. Run the test again. 3. If the test continues to return NO BOARD, escalate the problem.

End Loopback/Span Test (#1216)

This test is destructive.

The End Loopback/Span Test will terminate an active loopback or span test on a TN767E DS1 circuit pack. Bit error counting against the received test pattern stream is terminated and sending of the framed 3-in-24 test pattern is halted. If either the CPE Loopback Jack or the far-end CSU is looped, the appropriate loopback deactivate code is sent. If the loopback could not be deactivated, then the test will FAIL and a MINOR alarm will be noted in the alarm log until the loopback is cleared.

The test is highly destructive and can only be initiated by a system technician demanded *test ds1-loop UUCSS end-loopback/span-test* command. Since only one of these three different long-duration loopback/span tests can be active at a time, the TN767E circuit pack knows which loopback/span test to terminate.

All trunks or ports on the DS1 Interface circuit pack must be busied out via the system technician **busyout board** command before running this End Loopback/Span Test.

The *list measurements ds1 summary* command will display the length of time the test ran (*Test Duration* field) and number of bit errors detected (*Loopback/Span Test Bit-Error Count* field).

To restore the trunks or ports on the TN767E DS1 Interface circuit pack to the in-service state, execute the **release board** command.

Table 9-129. TEST #1216 End Loopback/Span Test

Error Code	Test Result	Description/ Recommendation
	ABORT	Internal System Error 1. Retry the *test ds1-loop UUCSS end-loopback/span-test* command at 1-minute intervals a maximum of 5 times. 2. If the test continues to abort, escalate the problem.
1005	ABORT	End Loopback/Span Test cannot be executed in the current configuration. To run this, the TN767E or later suffix DS1 must be administered for 24-channel operation. The "Bit Rate" field on the DS1 circuit pack administration form must be set to "1.544" for 24-channel operation.

Continued on next page

Table 9-129. TEST #1216 End Loopback/Span Test — *Continued*

Error Code	Test Result	Description/ Recommendation
1015	ABORT	Ports on the DS1 Interface circuit pack have not been busied out to out-of-service. 1. Enter the **busyout board UUCSS** command to put all trunks or ports of the DS1 Interface circuit pack into the out-of-service state. 2. Retry the command. 3. If the test continues to abort, escalate the problem.
2000	ABORT	Response to the test request was not received within the allowable time period. If Error Type 1538 is present in the Error Log, follow the maintenance strategy recommended for this error type.
2100	ABORT	Could not allocate the necessary system resources to run this test. 1. Retry the command at 1-minute intervals for a maximum of 5 times. 2. If the test continues to abort, escalate the problem.
1313	FAIL	The TN767E DS1 circuit pack could not deactivate the loopback through the Customer Loopback Jack. 1. Retry the *test ds1-loop UUCSS end-loopback/span-test* command at 1-minute intervals for a maximum of 5 times. 2. If the test continues to fail with this error code, escalate the problem.
1314	FAIL	The TN767E DS1 circuit pack could not deactivate the loopback through the far-end CSU. 1. Make sure that the far-end DS1 is installed if the far-end CSU is a 120A1 AT&T CSU Module. 2. Retry the *test ds1-loop UUCSS end-loopback/span-test* command at 1-minute intervals for a maximum of 5 times. 3. If the test continues to fail with this error code, escalate the problem.

Continued on next page

Table 9-129. TEST #1216 End Loopback/Span Test — *Continued*

Error Code	Test Result	Description/ Recommendation
	PASS	The active long-duration loopback or span test on the TN767E circuit pack was successfully terminated.
0	NO BOARD	The DS1 Interface circuit pack is not administered. 1. Administer the DS1 Interface circuit pack by issuing the **add ds1 UUCSS** command. 2. Run the test again. 3. If the test continues to return NO BOARD, escalate the problem.

ICSU Status LEDs Test (#1227)

The TN767E DS1 circuit pack has four status LEDs on the faceplate in addition to the three standard faceplate LEDs. These four status LEDs are associated with the 120A1 Channel Service Unit (CSU) Module that can be connected to the TN767E board via the I/O connector panel on the back of the port carrier. The TN767E circuit pack combined with AT&T's new 120A1 CSU Module forms an Integrated CSU (ICSU).

This test is a visual test. It will light the four status LEDs red for 5 seconds, then light them green for 5 seconds, then light them yellow for 5 seconds, then turn the LEDs off and returns control of the status LEDs to the circuit pack.

This test will only be executed on TN767E or later suffix DS1 circuit packs administered for 24-channel operation (1.544 bit rate).

If the 120A1 CSU Module is not physically installed, the status LEDs are always off and this test will abort.

Table 9-130. TEST #1227 ICSU Status LEDs Test

Error Code	Test Result	Description/ Recommendation
	ABORT	Internal System Error 1. Retry the command at 1-minute intervals a maximum of 5 times. 2. If the test continues to abort, escalate the problem.
1005	ABORT	The ICSU Status LEDs test can not be executed for the current configuration. The test applies only to TN767E or later DS1 circuit packs administered for 24-channel operation (1.544 bit rate). 1. If the circuit pack is a TN767E or later suffix DS1 circuit pack, then retry the command. 2. If the test continues to abort, escalate the problem.
1951	ABORT	The ICSU Status LEDs Test can not be executed because a 120A1 or later suffix CSU Module is not physically installed. If using a 120A1 CSU Module, physically connect it to the TN767E board on the back of the port carrier otherwise, ignore this abort.

Continued on next page

Table 9-130. TEST #1227 ICSU Status LEDs Test — *Continued*

Error Code	Test Result	Description/ Recommendation
2100	ABORT	Could not allocate the necessary system resources to run this test. 1. Retry the command at 1-minute intervals for a maximum of 5 times. 2. If the test continues to abort, escalate the problem.
2500	ABORT	Internal System Error. 1. Retry the command. 2. If the test continues to abort, follow normal escalation procedures.
	PASS	The ICSU Status LEDs test executed successfully. A PASS result, however, does not necessarily mean that the status LEDs behaved properly. It only means that the software successfully attempted to light the status LEDs. This is a visual test. The service technician must visually exam the behavior of the LEDs while the test is running. The LEDs are functioning properly if the four status LEDs are lit red for 5 seconds, then lit green for 5 seconds, then lit yellow for 5 seconds. If the LEDs behave differently, the board should be replaced at the customer's convenience.
0	NO BOARD	The DS1 Interface circuit pack is not administered. 1. Administer the DS1 Interface circuit pack by issuing the **add ds1 UUCSS** command. 2. Run the test again. 3. If the test continues to return NO BOARD, escalate the problem.

DS1-FAC (DS1 Facility)

MO Name As It Appears in Alarm Log	Alarm Level	Initial System Technician Command to Run (a)	Full Name of MO
DS1-FAC	MAJOR	test ds1-facility UUCSSf sh r 1	DS1 Facility
DS1-FAC	MINOR	test ds1-facility UUCSSf sh r 1	DS1 Facility
DS1-FAC	WARNING	test ds1-facility UUCSSf sh r 1	DS1 Facility

a. UU is the universal cabinet number (1 for PPN, 2 -22 for EPNs). C is the carrier designation (A, B, C, D, or E). SS is the number of the slot in which the circuit pack resides (01 to 21). f is the DS1 facility (a, b, c, or d). See Chapter 7, "LED Indicators" for identification of DS1 facility LEDs.

The DS1-FAC is a part of the DS1 Converter (DS1C) Complex. The DS1C Complex consists of two TN574 DS1C circuit packs connected by one to four DS1 facilities. The maintenance object name for the DS1C circuit pack is DS1C-BD, and the maintenance object name for the connected DS1 facilities is DS1-FAC. See section DS1C-BD for description of the DS1C circuit pack.

The DS1C Complex is a part of the Port Network Connectivity (PNC). The DS1C Complex allows the distance between two Port Networks (PN) to be extended.

The DS1C circuit pack contains on-board firmware that detects DS1 facility alarms and errors, communicates status to maintenance software, and runs tests in the background or on demand from maintenance software. The overall maintenance software strategy includes demand tests, recovery, error logging and alarm logging, and periodic audits.

Every error condition reported by the firmware is associated with the background tests that the firmware runs autonomously. Demand tests that are executed by the maintenance software do not have any functionality that would effect any additional error manipulation by the firmware. However, the Failure Audit test #949 effects auditing of the software error log by forcing the firmware to report the pending errors again.

DS1C circuit packs are connected to the Expansion Interface (EI) circuit packs (TN570) and the Switch Node Interface (SNI) circuit packs (TN573) as shown in the Figure 9-22.

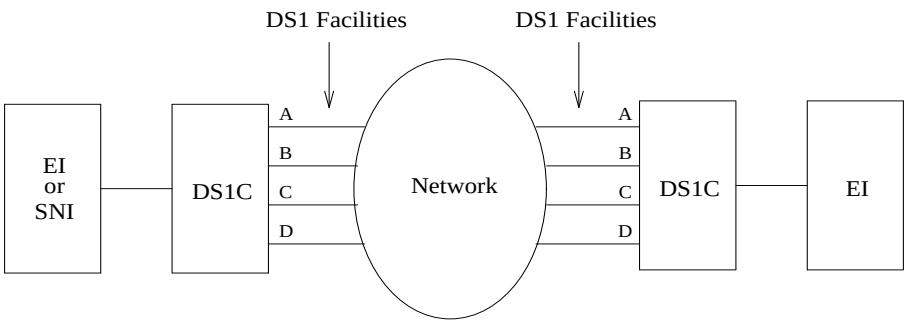

Figure 9-22. DS1C Complex and the DS1 Facilities

The DS1C Complex can replace fiber links between two EIs and fiber links between an EPN EI and an SNI. Fiber links between two SNIs and fiber links between the Processor Port Network (PPN) and the Center Stage Switch (CSS) cannot be replaced by a DS1C Complex.

One of the four DS1 facilities is called the packet facility, and it is the only facility that can carry packet traffic besides providing circuit connections. The packet facility has 22 channels available for circuit and packet connections. Other facilities each have 24 channels available for circuit connections. On the packet facility, channels 0 and 23 are not available for packet or for circuit connections. Channel 0 is used for excess packets traffic to prevent packet overflow that might result from zero code substitutions. Channel 23 is the DS1 Channel that carries control link data between the two DS1C circuit packs.

When there are alarms on the packet facility, DS1C circuit pack firmware changes the mapping of the DS1 channels to move the packet traffic to another ‘‘Digital Data Compatible’’ facility (as indicated on the fiber link administration screen). This mapping is done to keep the packet service operational at all times as the system control links are carried on these packet connections. When packet traffic is moved to another facility, circuit connections on the new facility are torn down, circuit connections on the old (faulty) facility are re-mapped to the new packet facility.

After firmware initialization, facility A, the first facility, is chosen as the default packet facility.

Seven LEDs provide an indication of the state of the DS1C circuit pack and the DS1 facilities. There is a yellow, a green, and a red LED under software and/or firmware control. There are four Green LEDs under hardware control that indicate, for each DS1 facility, whether a receive signal is present for the DS1 facility. From top to bottom these green LEDs correspond to DS1 facilities A, B,

C, and D respectively. If one of the four green LED is on, it indicates a signal is present, but it does not imply that the signal is using the correct framing format (ESF or D4) or line coding (ZCS or B8ZS). See section DS1C-BD for the description of the red, the green, and the yellow LEDs on the DS1C circuit pack.

DS1C circuit pack TN754 does not support the Wideband Switching feature.

DS1 Facility Busyout

Busying out a maintenance object allows service to be disconnected gracefully. Busyout puts the object out-of-service until the repair procedures are completed.

DS1 facilities are busied out via the **busyout ds1-facility** command. When an attempt is made to busyout the packet facility, system will print a warning message indicating that the **override** option must be used to busyout the packet facility. Busying out the packet facility will result in moving the packet traffic to another facility and disconnecting circuit connections on that new facility.

The system will not allow the last DS1 facility to be busied out. In this case, the DS1C circuit pack must be busied out instead.

When the **busyout ds1-facility** command is executed, software communicates with both DS1C circuit packs in the DS1C Complex. If the board at which the facility is being busied out is not accessible, then the abort code 2100 will be returned, if the board at the other end of the DS1C Complex is not accessible, then the abort code 105 will be returned.

DS1 Facility Administration

DS1 facility administration is a part of the fiber link administration. DS1 options are set in the second page of the fiber link administration screen. In Critical Reliability systems, third page of the fiber link administration screen contains the DS1 facility options for the B side of the PNC.

DS1 facility administration is explained in the following sections. Descriptions given here do not provide complete coverage of fiber link administration. See Port Network Connectivity (PNC) section in this document for complete description of the fiber link administration.

Replacing a DS1 Facility

Disconnecting a DS1 facility is service disrupting except on Critical Reliability Systems since they have PNC duplication.

On a Standard Reliability or High Reliability System (no PNC Duplication):

This procedure is destructive.

1. Busyout the DS1 facility via the **busyout ds1-facility** command.

2. Replace the DS1 facility.
3. Release the DS1 facility via the **release ds1-facility** command.

On a Critical Reliability System (PNC Duplication):

This procedure is non-destructive.

1. If the DS1 facility to be replaced is on the active PNC (its yellow LED will be on solid), first do a PNC demand interchange via the **reset pnc interchange** command. (The **status pnc** command can also be used to determine the active PNC.)
2. When the DS1 facility to be replaced is on the standby PNC (if the DS1 facility was originally on the standby PNC or after the PNC interchange has finished), busyout the DS1 facility via the **busyout ds1-facility** command.
3. Replace the DS1 facility.
4. Release the DS1 facility via the **release ds1-facility** command.

Installing a DS1 Facility

Installing a DS1 facility is done in the following sequence:

1. Connect the facility.
2. Check the fiber link number via the **list fibers** command. Administer the DS1 facility via the **change fiber-link** command. Change the **Facility Installed** field from "n" to "y" for the facility that is being installed.
3. Busyout the DS1C circuit pack via the **busyout board** command.
4. Run the DS1 Facility Connectivity test #790 via the **test board UUCSS long** command to make sure that the facilities are connected correctly.
5. Release the DS1C circuit pack via the **release board** command.

Removing a DS1 Facility

Removing a DS1 facility is service disrupting in any system configuration (because the DS1 facility administration is similar on both sides of the PNC on Critical Reliability Systems).

This procedure is destructive.

1. Busyout the DS1 facility via the **busyout ds1-facility** command.
2. Check the fiber link number via the **list fibers** command. De-administer the DS1 facility via the **change fiber-link** command. Change the **Facility Installed** field from "y" to "n" for the facility that is being removed.
3. Disconnect the DS1 facility (or facilities in Critical Reliability System configuration).

DS1 Interface Options

Following DS1 Interface options must be set with fiber link administration. To set the values, check the number of the fiber link via the **list fibers** command. Issue **change fiber-link** command and set the following fields:

Passes Far-end Clock

This field determines if the DS1 facility can be used as a clock reference for the receive fiber signal. The field is set to "y" unless the DS1 facility cannot be used as clock reference signal.

DS1 facilities cannot be used as system synchronization sources.

Digital Data Compatible

This field determines if the DS1 facility is suitable for carrying packet traffic. The field is set to "y" unless the DS1 facility is not digital data compatible.

DS1C-1 and DS1C-2 Line Compensation

The DS1 facility line signal is pre-equalized at the transmitter on the DS1C circuit pack so that DS1 line pulses have correct amplitude and shape when they reach the Network Interface (see Figure 9-23 on page D-234, “DS1 Facility Connections”). The amount of equalization necessary is determined by the distance to the Network Interface and also by the type of wiring used to connect to the Network Interface. If the equalization is not set to the correct value, potentially high error rates (errored seconds) will be observed on the DS1 facility. Equalization values are determined as follows:

Table 9-131. DS1 Line Equalization Settings

Equalizer Setting	Distance to Network Interface (feet)	
	Cable type 22 AWG ABAM & 24 AWG PDS	Cable type 26 AWG PDS
1	1 to 133	0 to 90
2	133 to 266	90 to 180
3	266 to 399	180 to 270
4	399 to 533	270 to 360
5	533 to 655	360 to 450

Zero Code Suppression

This field determines whether B8ZS or ZCS line coding is used for the DS1 facility. Same line coding must be used at each end of the DS1C Complex.

Framing Mode

This field determines whether ESF or D4 framing mode is used for the DS1 facility. Same framing mode must be used at each end of the DS1C Complex.

DS1 Converter Performance Measurements Report

The DS1 Converter Performance Measurements provide link performance measurements for the DS1 facilities.

When no facility alarms exist on the DS1 facility, events that indicate a degradation in the performance of the DS1 facility are monitored and recorded. These events will generate appropriate alarms when performance of the DS1 facility has degraded below acceptable levels. These measurements include errored seconds, bursty seconds, severely errored seconds, and failed seconds.

There are two DS1 Converter Performance Measurements Sub-reports. The first sub-report, DS1 Converter Performance Measurements Summary Report, provides information on the worst 15 minute interval of data, the total for 24 hours of data and the current 15 minute counter for each of the above mentioned counters.

The second sub-report, DS1 Converter Performance Measurements Detailed Report displays a detailed log for the last 96-15 minute intervals for each of the above mentioned counters.

The DS1 Converter Performance Measurements Summary Report can be accessed with **list measurements ds1-facility summary UUCSSf [print/schedule]**. A more detailed version of the report is accessed with **list measurements ds1-facility log UUCSSf [print/schedule]**.

The user can reset all hardware and software measurement counters for a given facility with **clear measurements ds1-facility UUCSSf**. The *Counted Since* time is also reset and the *Number of Valid Intervals* count is set to zero.

The reports are printed on the screen or, by using the *print* option, on a printer attached to the terminal.

Clearing Firmware Errors

DS1C error reports are generated by firmware autonomously, they are not associated with system technician demanded tests. Therefore, **test board clear** command does not affect the error status known by the DS1C firmware. To clear all the errors unconditionally, execute the **clear firmware-counters** command.

Error Log Entries and Test to Clear Values

DS1 Facility Error Log Entries					
Error Type	**Aux Data**	**Associated Test**	**Alarm Level**	**On/Off Board**	**Test to Clear Value**
0*	0	Any	Any	Any	test ds1-facility UUCSSf sh r 1
1(a)		Failure Audit #949	MAJOR	ON	test board UUCSS sh r 1
18(b)		busyout ds1-facility UCSSf	WARNING	OFF	release ds1-facility UUCSSf
257(c)		Failure Audit #949	MINOR	ON	test board UUCSS sh r 1
513(d)		Failure Audit #949	MINOR	OFF	test board UUCSS sh r 1
856(e)		Failure Audit #949	MINOR	OFF	test board UUCSS sh r 1
1025(f)		Failure Audit #949	MAJOR**	OFF	test board UUCSS sh r 1
1281(g)		Failure Audit #949	MAJOR**	OFF	test board UUCSS sh r 1
1537(h)		Failure Audit #949	MAJOR**	OFF	test board UUCSS sh r 1
1793(i)		Failure Audit #949	MAJOR**	OFF	test board UUCSS sh r 1
2065(j)		Failure Audit #949	MINOR	OFF	test board UUCSS sh r 1

* Run the Short Test Sequence first. If all tests pass, run the Long Test Sequence. Refer to the appropriate test description and follow the recommended procedures.

** These failures are logged as a WARNING alarm when the error is first reported. The alarm severity is raised to a MAJOR in 15 minutes if the problem persists.

Notes:

Follow normal escalation procedures if errors cannot be resolved as described below. When problems persist, resetting the DS1C circuit pack via the **reset board** command may temporarily resolve the error condition and restore service until further assistance is provided.

a. A major failure occurred on the DS1 interface hardware on the DS1C circuit pack associated with this DS1 facility. Replace the DS1C circuit pack.

b. This error indicates that the DS1 facility has been busied out via the **busyout ds1-facility** command. To resolve this error, release the DS1 facility via the **release ds1-facility** command.

c. A minor failure occurred on the DS1 interface hardware on the DS1C circuit pack associated with this DS1 facility. Replace the DS1C circuit pack.

d. DS1C circuit packs in this DS1C Complex do not match in their framing formats (ESF or D4) or in their line coding (ZCS or B8ZS) on this DS1 facility. This error should clear in 15 minutes.

   1. Verify that DS1 facility and the network is using the same line coding (ZCS, B8ZS) and framing mode (ESF, D4). Use **list fibers** and **display fiber** commands to check the administered values for this DS1 facility. Contact T1 Network Service to check the modes used by the network.
   2. If the problem persists, reset both DS1C circuit packs via the **reset board** command.
   3. If the problem still persists, replace this DS1C circuit pack.
   4. If the problem still persists, replace the DS1C circuit pack at the other end of the DS1C Complex.

e. More than 88 negative and/or positive slip errors occurred. This error will clear when there are no slips for 1 hour.

   1. Enter **display errors** and follow the associated repair procedures for any SYNC, TDM-CLK, and SNC-BD errors.
   2. Verify that DS1 facility and the network is using the same line coding (ZCS, B8ZS) and framing mode (ESF, D4). Use **list fibers** and **display fiber** commands to check the administered values for this DS1 facility. Contact T1 Network Service to check the modes used by the network.
   3. Check line equalization settings as described in the above section,"DS1C-1 and DS1C-2 Line Compensation" on page D-227.
   4. Enter **display errors** and follow the associated repair procedures for any EXP-INTF, and SNI-BD errors for the Fiber Endpoints. Enter **display errors** and follow the associated repair procedures for any FIBER-LK errors for this fiber link.
   5. If the problem still persists, replace this DS1C circuit pack.
   6. If the problem still persists, replace the DS1C circuit pack at the other end of the DS1C Complex.

f. Loss of Frame Alignment (LFA) Alarm, the RED alarm: This alarm indicates that the DS1 interface associated with the DS1 facility cannot frame up on the received data with the ESF or D4 framing pattern and B8ZS or ZCS line coding,

   For the following repair procedure, refer to Figure 9-23 on page D-234, “DS1 Facility Connections,” and the diagrams in the related test descriptions.

1. If the network is used instead of private T1 lines, check that DS1 facility and the network is using the same line coding (ZCS, B8ZS) and framing mode (ESF, D4). Use **list fibers** and **display fiber** commands to check the administered values for this DS1 facility. Contact T1 Network Service to verify the modes set for the network.
2. Run the Near-end External Loopback test #799 via the **test ds1-facility UUCSSf external-loopback** command by setting up a loopback at CPE side of CSU towards DS1C circuit pack shown as loopback point **LB 1** in the test description diagram. If the test fails, replace connectors and the cables between CSU and the DS1C circuit pack.
3. If the test passes, run the Near-end External Loopback test #799 via the **test ds1-facility UUCSSf external-loopback** command by setting up a loopback at DS1 facility side of CSU towards the DS1C circuit pack shown as loopback point **LB 2** in the test description diagram. If the test fails, replace the CSU.
4. If the test #799 passes, run the Far-end Internal Loopback test #797 via the **test ds1-facility UUCSSf long** command. If the test #797 passes, go to step 6. If the test fails, then run the Near-end External Loopback test #799 via the **test ds1-facility UUCSSf external-loopback** command at the other end of the DS1C Complex, and repeat steps 2 and 3 for the other end-point.

   If the system is not configured as a Critical Reliability System and if there is only one DS1 facility, then the test #799 can only be executed at the end which is closer to the SPE relative to the DS1C circuit pack at the end of the DS1C Complex. If the test cannot be executed for this reason, then replace the cables, connectors and the CSU at the other end of the DS1C Complex.
5. If the problem could not be isolated by the near-end external loopback tests, then the fault should be between CSU A and CSU B. Contact T1 Network Service to resolve the problem(*).
6. If the problem still persists, check for excessive slips and synchronization problems. Enter **display errors** and follow the associated repair procedures for any SYNC, TDM-CLK, or SNC-BD errors. Check line equalization settings as described in the above section, "DS1C-1 and DS1C-2 Line Compensation" on page D-227.
7. Enter **display errors** and follow the associated repair procedures for any EXP-INTF, and SNI-BD errors for the Fiber Endpoints. Enter **display errors** and follow the associated repair procedures for any FIBER-LK errors for this fiber link.
8. If the problem still persists, replace this DS1C circuit pack.
9. If the problem still persists, replace the DS1C circuit pack at the other end of the DS1C Complex.

If D4 framing mode is used, an in-band alarm signal (RFA) will be transmitted that will corrupt the transmit data on this facility.

g. Remote Frame Alarm (RFA), the YELLOW alarm. This alarm indicates that the DS1C circuit pack's neighbor (the DS1C circuit pack at the other end of the DS1C Complex) is unable to frame up on the signal being sent to it by this DS1C circuit pack on this DS1 facility.

   The far-end facility will be in LFA state. To isolate faults for this case, follow the same repair procedure as in error type #1025 (Loss of Frame Alignment) for the other end of the DS1 facility.

   If D4 framing is used, received data will be corrupted in addition to transmitted data.

h. Alarm Indication Signal (AIS), the BLUE alarm. This alarm indicates that the far end of the facility is out of service. This means that the other end of the DS1 facility has a LOS condition and the CSU is providing a **Keep Alive** signal. If the **Keep Alive** signal is not supplied by the CSU, a LOS condition will exist on the facility instead of the AIS. If a LOS condition exists on the facility, the green LED (on the DS1C circuit pack) that is associated with the facility will be off; if an AIS condition exists on the facility, the green LED that is associated with the facility that has the AIS will be on.

   To isolate faults for this case, follow the same repair procedure as in error type #1793 (Loss of Signal) for the other end of this DS1 facility.

   An RFA alarm indication (YELLOW alarm) is transmitted in response to this BLUE alarm. If D4 framing is used, transmitted data is corrupted.

i. Loss of Signal (LOS) alarm. This alarm indicates that no signal is present at the DS1 interface associated with the facility. The green LED that is associated with the facility will be off, if the green LED is not off, replace the DS1C circuit pack.

   Fault isolation for this problem may be different depending on the capabilities of the CSU device that is being used. Typically, CSUs provides an LED that is useful for fault isolation (see Figure 9-24 on page D-235, "Typical CSU Maintenance Capabilities." This is the "16 Zeros" LED. This LED is momentarily lit when a string of 16 consecutive zeros is detected in the DS1 signal from the DS1C. Zeros on a DS1 link are represented by an absence of a pulse. Thus, an active 16 Zeros LED indicates a LOS alarm from the DS1C.

   For the following repair procedure, refer to Figure 9-23 on page D-234, "DS1 Facility Connections," and the diagrams in the related test descriptions.

   1. If the DS1 facility side LOS indication on CSU A is off (inactive), check for a problem between the DS1C A circuit pack and the CPE side of CSU A. Connectors, cables, and the CSU may need to be replaced.
   2. If the DS1 facility side LOS indication on CSU A is on (active), check for a problem between the CSU A and the CSU B. Contact T1 Network Service to resolve the problem.[1]

3. If the CPE side LOS indication on CSU B is on (active), check for a problem between the CPE side of CSU B and the DS1C B circuit pack. Connectors, cables, and the CSU B may need to be replaced.
4. If the CSU A and the CSU B do not provide visual CPE side and DS1 facility side LOS indications, follow the repair procedure that is given for error type #1025 (Loss of Frame Alignment). Apply the procedure first to the DS1C B side instead of the DS1C A where the error is reported (external loopback test is not expected to pass if we execute it at this end as long as we have the LOS indication).

   Repair procedure for error type #1025 (Loss of Frame Alignment) includes execution of Near-end External Loopback test #799. If the system is not configured as a Critical Reliability System and if there is only one DS1 facility, then the test #799 can only be executed at the end which is closer to the SPE relative to the DS1C circuit pack at the end of the DS1C Complex. If the test cannot be executed for that reason, then still make the external loopback as if the test was going to be executed, but instead of executing the test, check the green LED at the face plate of the DS1C B that is associated with this DS1 facility. If the green LED is off, then replace the connectors, cables, and the CSU B.
5. If the problem still persists, replace the DS1C circuit pack at the other end of the DS1C Complex.
6. If the problem still persists, replace this DS1C circuit pack.

If D4 framing is used, an in-band alarm signal (RFA) is transmitted that corrupts transmit data in response to this alarm.

j. More than 17 misframe errors occurred. This error will clear when there are no misframes for 1 hour.

   1. Enter **display errors** and follow the associated repair procedures for any SYNC, TDM-CLK, or SNC-BD errors.
   2. Verify that DS1 facility and the network is using the same line coding (ZCS, B8ZS) and framing mode (ESF, D4). Use **list fibers** and **display fiber** commands to check the administered values for this DS1 facility. Contact T1 Network Service to check the modes used by the network.

---

1. DS1 facility may be a private line or it may be connected to the Network. Network Interface (NI) point is where the customer's maintenance responsibility ends and the DS1 facility vendor's maintenance responsibility begins. This point ideally is the T, R, T1, and R1 terminals on the rear of the CSU to which the wires of the DS1 facility vendor's DS1 facility is attached. If the NI does not occur at this point, then any cabling between the CSU terminals and the NI is also considered to be part of the CPE. This cable typically runs between the DS1 facility terminals of the CSU and a cross-connect field where the DS1 facility vendor has terminated the DS1 facility. Maintenance responsibility for this portion of the DS1 facility resides with the customer unless other arrangements are made.

3. Check line equalization settings as described in the above section "DS1C-1 and DS1C-2 Line Compensation" on page D-227.
4. Enter **display errors** and follow the associated repair procedures for any EXP-INTF, and SNI-BD errors for the Fiber Endpoints. Enter **display errors** and follow the associated repair procedures for any FIBER-LK errors for this fiber link.
5. If the problem still persists, replace this DS1C circuit pack.
6. If the problem still persists, replace the DS1C circuit pack at the other end of the DS1C Complex.

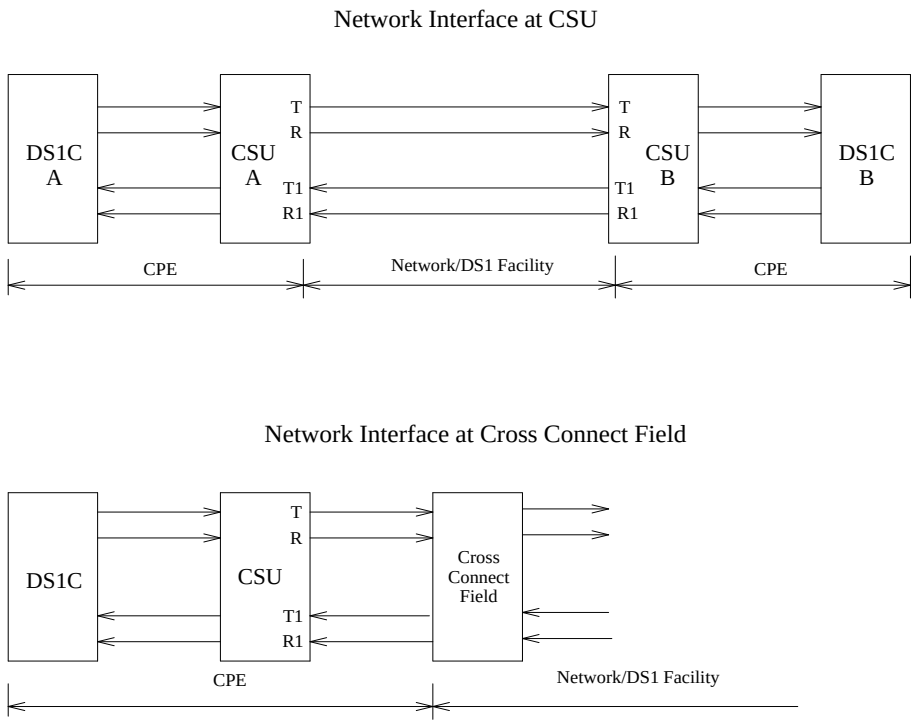

Figure 9-23. DS1 Facility Connections

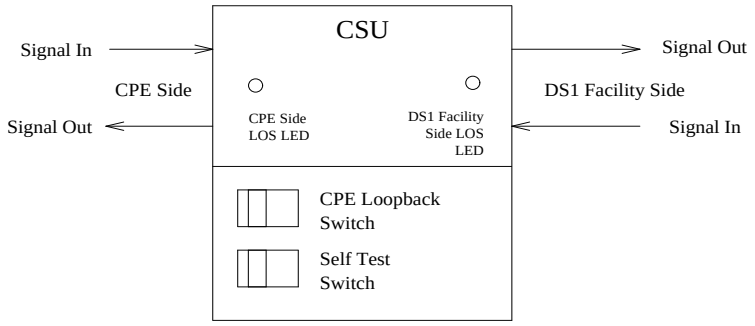

Figure 9-24. Typical CSU Maintenance Capabilities

System Technician-Demanded Tests: Descriptions And Error Codes

Always investigate tests in the order presented in the table below when inspecting errors in the system. By clearing error codes associated with the *Failure Audit* for example, you may also clear errors generated from other tests in the testing sequence.

Order of Investigation	Short Test Sequence	Long Test Sequence	External Loopback	Reset Sequence	D/ND *
Failure Audit (#949)	X	X			ND
DS1 Interface Options Audit (#798)	X	X			ND
Far-End Internal Loopback Test (#797)		X			D
Near-end External Loopback Test (#799)			X		D

Far-End Internal Loopback Test (#797)

This test is destructive.

This test starts at the DS1C circuit pack whose equipment location was entered and traverses over the specified facility and loops at the internal facility interface on the other DS1C circuit pack in the DS1C Complex. See Figure 9-25 below.

Every part of this test is executed under firmware control and the result is sent back to the maintenance software. Test is executed by sending digital data through every DS1 channel on this facility. Two different test patterns are used, these are hexadecimal values 55 and AA.

If there is only one DS1 facility available, system will not allow that last facility to be busied out. In that case, the DS1C circuit pack must be busied out before executing this test.

On a Standard Reliability and High Reliability System (no PNC duplication), if there is only one DS1 facility available, then this test can only be executed at the end-point which is closer to the SPE relative to the neighbor DS1C circuit pack because of its impacts on the system control links, also the completion of the test will be delayed in this configuration to wait for the recovery of the system control links. On a Critical Reliability System (PNC Duplication), or when there are multiple DS1 facilities, test can be executed at any DS1C circuit pack.

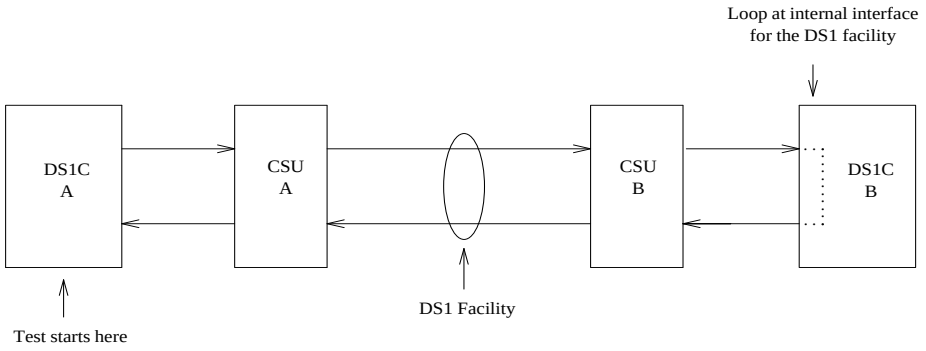

Figure 9-25. Far-End Internal Loopback Test (#797)

Table 9-132. TEST #797 Far-End Internal Loopback Test

Error Code	Test Result	Description/ Recommendation
2000	ABORT	Timed out while waiting for a response from the circuit pack. 1. Retry the command at 1-minute intervals a maximum of 3 times. 2. If the test still aborts, follow standard escalation procedures.
2100	ABORT	Could not allocate the necessary system resources to run this test. 1. Retry the command at 1-minute intervals a maximum of 3 times. 2. If the test still aborts, follow standard escalation procedures.
2300	ABORT	The downlink message necessary to run this test could not be sent. 1. Retry the command at 1-minute intervals a maximum of 3 times. 2. If the test still aborts, follow standard escalation procedures.
2301	ABORT	The timer could not be set before sending the downlink message necessary to run this test. 1. Retry the command at 1-minute intervals a maximum of 3 times. 2. If the test still aborts, follow standard escalation procedures.
2316	ABORT	Fiber link is not administered. Administer the DS1C fiber link via the **add fiber-link** command.
2321	ABORT	DS1 facility is not busied out. Busyout the DS1 facility via the **busyout ds1-facility** command. If there is only one DS1 facility, then busyout the DS1C circuit pack via the **busyout board** command.
2332	ABORT	Test is not allowed to execute at the far end with this system configuration when there is only one DS1 facility available. Execute the test at the other end of the DS1C Complex.

Continued on next page

Table 9-132. TEST #797 Far-End Internal Loopback Test — *Continued*

Error Code	Test Result	Description/ Recommendation
2500	ABORT	Internal System Error 1. Retry the command at 1-minute intervals a maximum of 3 times. 2. If the test still aborts, follow standard escalation procedures.

Continued on next page

Table 9-132. TEST #797 Far-End Internal Loopback Test — *Continued*

Error Code	Test Result	Description/ Recommendation
	FAIL	Far-End Internal loopback failed. A problem exists between DS1C A and the internal interface for DS1 facility on the DS1C B (see Figure 9-25 on page D-236). If this facility is not **digital data compatible** (as defined in the fiber-link administration screen), then this test will not PASS. 1. If the test is executed as a part of an error analysis, then return back to the related section. 2. Enter **display errors** and follow the associated repair procedures for any on-board DS1C-BD errors on this DS1C circuit pack and the DS1C circuit pack at the other end of the DS1C Complex. 3. If the network is used instead of private T1 lines, check that DS1 facility and the network is using the same line coding (ZCS, B8ZS) and framing mode (ESF, D4). Use **list fibers** and **display fiber** commands to check the administered values for this DS1 facility. Contact T1 Network Service to verify the modes set for the network. 4. Isolate the problem by running the Near-end External Loopback test #799 via the **test ds1-facility UUCSSf external-loopback** command, first at this end and then at the other end of the DS1C Complex. Setup loopbacks at different points as shown in the description diagram for test #799, and follow repair procedures described for test #799. 5. If the problem could not be found by near-end external loopback tests, then the fault should be between the CSU A and the CSU B. Contact T1 Network Service to resolve the problem, also see the repair procedures for error type #1025 (Loss of Frame Alignment). 6. If the test still fails, follow standard escalation procedures.
	PASS	Transmission through the path of the loopback is successful.

DS1 Interface Options Audit Test (#798)

This test is non-destructive.

This test sends the administered DS1 Interface options to the DS1C circuit pack. Options are sent to both DS1C circuit packs at the same time to prevent any transitional mismatch of options.

Following DS1 facility options are sent to the DS1C circuit pack: **Framing Mode**, **Zero Code Suppression**, and **DS1C-1** and **DS1C-2 Line Compensation**. These option fields are given in the fiber link administration screen.

Table 9-133. TEST #798 DS1 Interface Options Audit

Error Code	Test Result	Description/ Recommendation
105	ABORT	The neighbor DS1C circuit pack at the other end of the DS1C Complex is not accessible. 1. Retry the command at 1-minute intervals a maximum of 3 times. 2. If the test still aborts, follow standard escalation procedures.
2100	ABORT	Could not allocate the necessary system resources to run this test. 1. Retry the command at 1-minute intervals a maximum of 3 times. 2. If the test still aborts, follow standard escalation procedures.
2000	ABORT	Timed out while waiting for a response from the circuit pack. 1. Retry the command at 1-minute intervals a maximum of 3 times. 2. If the test still aborts, follow standard escalation procedures.
2300	ABORT	The downlink message necessary to run this test could not be sent. 1. Retry the command at 1-minute intervals a maximum of 3 times. 2. If the test still aborts, follow standard escalation procedures.

Continued on next page

Table 9-133. TEST #798 DS1 Interface Options Audit — *Continued*

Error Code	Test Result	Description/ Recommendation
2301	ABORT	The timer could not be set before sending the downlink message necessary to run this test. 1. Retry the command at 1-minute intervals a maximum of 3 times. 2. If the test still aborts, follow standard escalation procedures.
2316	ABORT	Fiber link is not administered. Administer the DS1C fiber link via the **add fiber-link** command.
2500	ABORT	Internal System Error 1. Retry the command at 1-minute intervals a maximum of 3 times. 2. If the test still aborts, follow standard escalation procedures.
	PASS	The DS1 Interface options are sent to the circuit pack.

Near-end External Loopback Test (#799)

This test is destructive

This test starts at the DS1C circuit pack whose equipment location was entered and traverses over the specified facility and loops back at the manually hard-wired external loopback device. Depending on the type of physical connectivity of the DS1 facility, special tools, cables or connectors may be required to make the hard-wired loopbacks.

To isolate a problem, set the loopback first at the loopback point **LB 1**, and then at the loopback point **LB 2**, see Figure 9-26 on the following page, and the Figure 9-23 on page D-234, “DS1 Facility Connections,” (following the Error Log Table). Place the loopbacks at as many points as your CSU capabilities will allow. Hard-wired loopbacks at the far end are not desirable, because the equalization level adjustments may cause problems.

Every part of this test is executed under firmware control and the result is sent back to the maintenance software. Test is executed by sending digital data through every DS1 channel on this DS1 facility. Two different test patterns are used, these are hexadecimal values 55 and AA.

This test is executed via the **test ds1-facility UUCSSf external-loopback** command. It is not part of the Long Test Sequence because it requires modifications to the physical connectivity of the DS1 facility.

If there is only one DS1 facility available, system will not allow the last facility to be busied out. In that case, the DS1C circuit pack must be busied out before executing this test.

On a Standard Reliability and High Reliability System (no PNC duplication), if there is only one DS1 facility available, then this test can only be executed at the end-point which is closer to the SPE relative to the neighbor DS1C circuit pack because of its impacts on the system control links. On a Critical Reliability System (PNC Duplication), or when there are multiple DS1 facilities, test can be executed at any DS1C circuit pack.

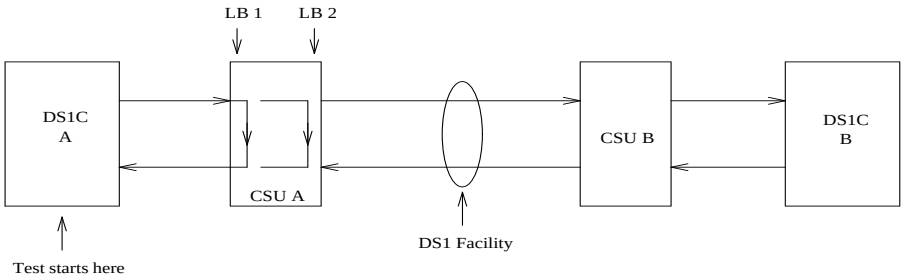

Figure 9-26. Loopback Points for Test #799

Table 9-134. TEST #799 Near-end External Loopback Test

Error Code	Test Result	Description/ Recommendation
2100	ABORT	Could not allocate the necessary system resources to run this test. 1. Retry the command at 1-minute intervals a maximum of 3 times. 2. If the test still aborts, follow standard escalation procedures.
2000	ABORT	Timed out while waiting for a response from the circuit pack. 1. Retry the command at 1-minute intervals a maximum of 3 times. 2. If the test still aborts, follow standard escalation procedures.
2300	ABORT	The downlink message necessary to run this test could not be sent. 1. Retry the command at 1-minute intervals a maximum of 3 times. 2. If the test still aborts, follow standard escalation procedures.

Continued on next page

Table 9-134. TEST #799 Near-end External Loopback Test — *Continued*

Error Code	Test Result	Description/ Recommendation
2301	ABORT	The timer could not be set before sending the downlink message necessary to run this test. 1. Retry the command at 1-minute intervals a maximum of 3 times. 2. If the test still aborts, follow standard escalation procedures.
2316	ABORT	Fiber link is not administered. Administer the DS1C fiber link via the **add fiber-link** command.
2321	ABORT	DS1 facility is not busied out. Busyout the DS1 facility via the **busyout ds1-facility** command. If there is only one DS1 facility, then busyout the DS1C circuit pack via the **busyout board** command.
2332	ABORT	Test is not allowed to execute at the far end with this system configuration when there is only one DS1 facility available. Check the green LED at the face plate of the DS1C circuit pack. The green LED should be on if the loop is complete.
2500	ABORT	Internal System Error 1. Retry the command at 1-minute intervals a maximum of 3 times. 2. If the test still aborts, follow standard escalation procedures.

Continued on next page

Table 9-134. TEST #799 Near-end External Loopback Test — *Continued*

Error Code	Test Result	Description/ Recommendation
	FAIL	Near-end External loopback failed. A problem exists in the path of the loopback. 1. If the test is executed as a part of an error analysis, then return back to the related section. 2. Enter **display errors** and follow the associated repair procedures for any on-board DS1C-BD errors. 3. If the loopback point is **LB 1**, replace connectors and cables between the DS1C A and the CSU A. If the loopback point is **LB 2**, replace CSU A. Also see the repair procedure for error type #1025 (Loss of Frame Alignment). 4. If the test still fails, replace DS1C A circuit pack. 5. If the test still fails, follow standard escalation procedures.
	PASS	Transmission through the path of the loopback is successful.

Failure Audit (#949)

This test is non-destructive.

This test queries the DS1C circuit pack for any existing circuit pack or facility failures and any unacknowledged cleared failure messages. Upon receiving the query request, DS1C firmware sends failure reports to the maintenance software for every error in its failure database.

This test operates on both maintenance objects DS1C-BD and DS1-FAC. Error counts of both maintenance objects (DS1C-BD and DS1-FAC) that are displayed in the error log will be incremented when this test is executed. This test is also executed internally by the maintenance software when an alarm is resolved

Table 9-135. TEST #949 Failure Audit

Error Code	Test Result	Description/ Recommendation
2100	ABORT	Could not allocate the necessary system resources to run this test. 1. Retry the command at 1-minute intervals a maximum of 3 times. 2. If the test still aborts, follow standard escalation procedures.
2000	ABORT	Timed out while waiting for a response from the circuit pack. 1. Retry the command at 1-minute intervals a maximum of 3 times. 2. If the test still aborts, follow standard escalation procedures.
2300	ABORT	The downlink message necessary to run this test could not be sent. 1. Retry the command at 1-minute intervals a maximum of 3 times. 2. If the test still aborts, follow standard escalation procedures.

Continued on next page

Table 9-135. TEST #949 Failure Audit — *Continued*

Error Code	Test Result	Description/ Recommendation
2301	ABORT	The timer could not be set before sending the downlink message necessary to run this test. 1. Retry the command at 1-minute intervals a maximum of 3 times. 2. If the test still aborts, follow standard escalation procedures.
2316	ABORT	Fiber link is not administered. Administer the DS1C fiber link via the **add fiber-link** command.
2500	ABORT	Internal System Error 1. Retry the command at 1-minute intervals a maximum of 3 times. 2. If the test still aborts, follow standard escalation procedures.
	FAIL	The DS1C circuit pack reported failures or retransmitted a cleared failure message. 1. Enter **display errors** and follow the associated repair procedures for any DS1C-BD and DS1-FAC errors. 2. If the test still fails, follow standard escalation procedures.
	PASS	The DS1C circuit pack has no failures.

Clear Firmware Counters (#984)

This test number is used to report results of the **clear firmware-counters** command. This is not an actual demand maintenance test. If the command aborts, refer to the error codes listed for Test #949.

DS1C-BD (DS1 Converter)

MO Name As It Appears in Alarm Log	Alarm Level	Initial System Technician Command to Run (a)	Full Name of MO
DS1C-BD	MAJOR	test board UUCSS sh r 1	DS1C Circuit Pack
DS1C-BD	MINOR	test board UUCSS sh r 1	DS1C Circuit Pack
DS1C-BD	WARNING	release board UUCSS	DS1C Circuit Pack

a. UU is the universal cabinet number (1 for PPN, 2 -22 for EPNs). C is the carrier designation (A, B, C, D, or E). SS is the number of the slot in which the circuit pack resides (01 to 21).

The DS1C Complex is part of the Port Network Connectivity (PNC) consisting of 2 TN754 DS1 Converter circuit packs connected by one to four DS1 facilities. It is used to extend the range of the 32 Mbps fiber links that connect EPNs to either the PPN or the Center Stage Switch, allowing EPNs to be located at remote sites. The TN754 does not support the Wideband Switching feature.

The DS1C circuit pack contains on-board firmware that detects alarms and errors, communicates status to maintenance software, and runs tests in the background or on demand from maintenance software. The overall maintenance software strategy includes demand tests, recovery, error and alarm logging, and periodic audits.

Every error condition reported by the firmware is associated with background tests that the firmware runs autonomously. Demand tests that are executed by the maintenance software do not cause any new error generation by the firmware. However, the Failure Audit test #949 effects auditing of the software error log by forcing the firmware to report the pending errors again.

Maintenance of the DS1 facilities themselves is covered under the DS1-FAC maintenance object.

DS1C circuit packs are connected to TN570 Expansion Interface (EI) circuit packs and TN573 Switch Node Interface (SNI) circuit packs via metallic cables as shown in Figure 9-27. A fiber link cable can be used instead of the metallic cable if it is necessary to locate the DS1C far from the EI or SNI circuit pack.

The DS1C Complex can extend a fiber link between two EIs or between an EPN EI and an SNI. Fiber links between two SNIs or between the Processor Port Network (PPN) and the Center Stage Switch (CSS) cannot be extended.

The DS1C circuit pack can be placed in any regular slot in a PN carrier. However, the DS1C circuit pack can only be placed in slots 1 and 21 in a Switch Node (SN) carrier. The DS1C circuit pack is not connected to the TDM bus or the

SN backplane. Communication to the circuit pack is done through the connected EI or the SNI circuit packs. Therefore, there is considerable interaction between the DS1Cs and the connected EIs and the SNIs. A special so-called "Y" cable connects the DS1C circuit pack to the Fiber Endpoint and to the facilities.

Figure 9-27 and Figure 9-28 show DS1C connections in a direct connect PNC configuration and between the CSS and an EPN in a Critical Reliability System configuration (duplicated PNC).

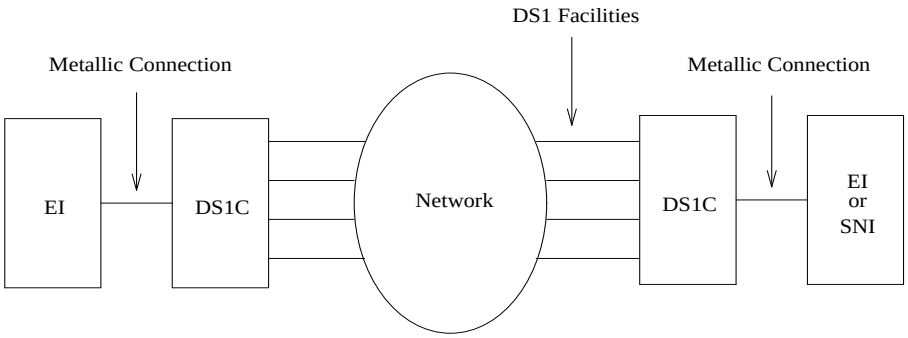

Figure 9-27. DS1C connection to EIs and SNIs

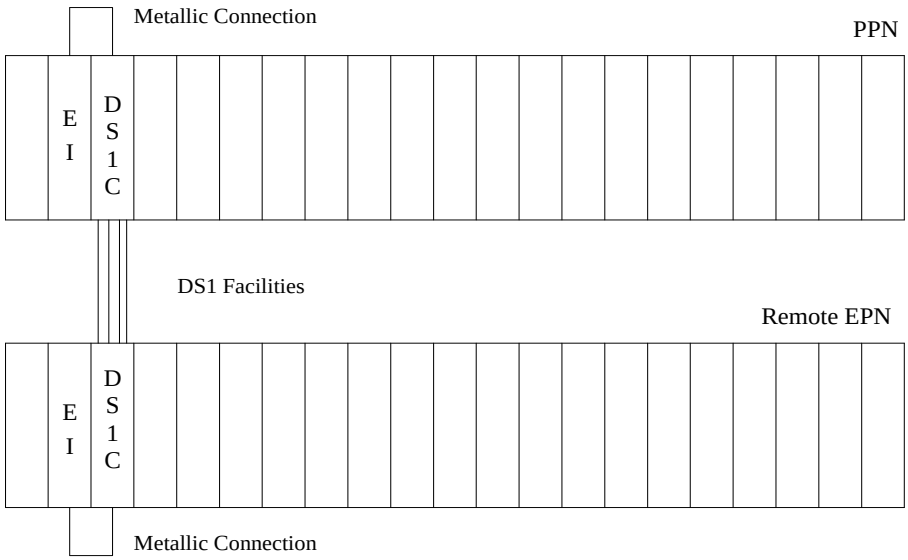

Figure 9-28. DS1C Complex in Direct Connect PNC

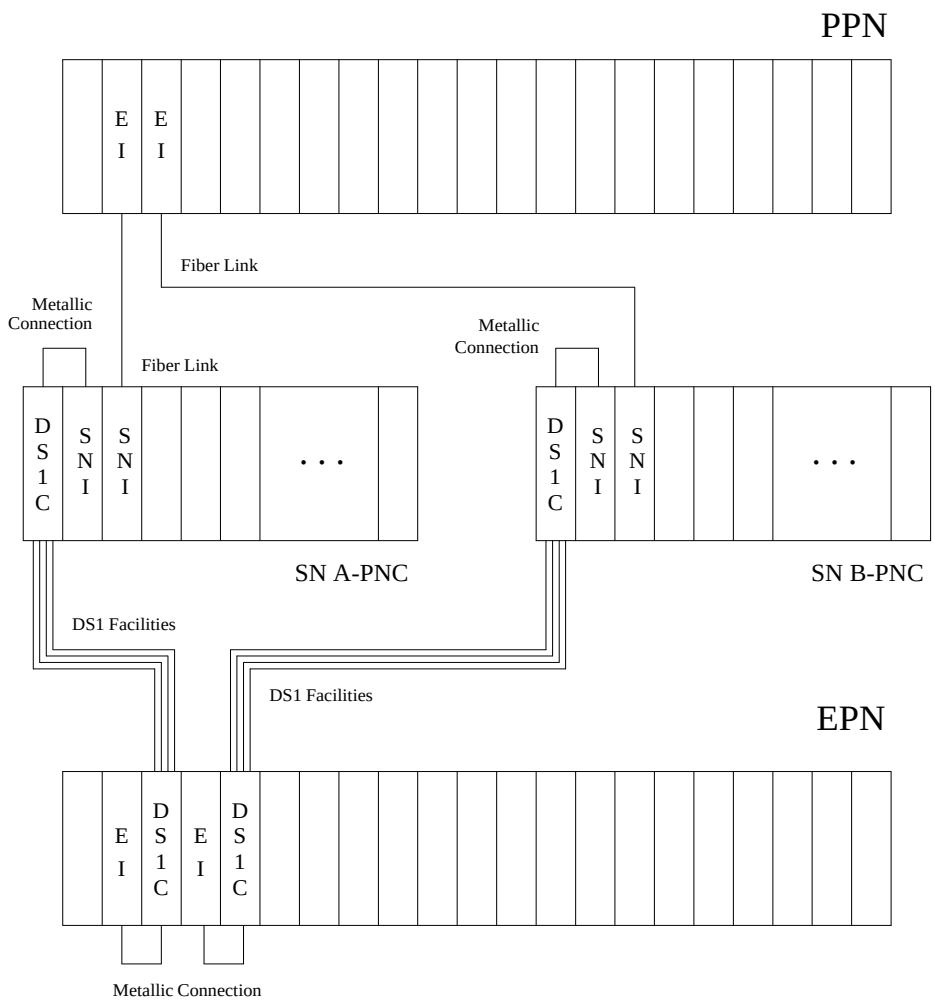

Figure 9-29. DS1C Complex in Duplicated PNC with 1 SN

DS1C Administration and Board Insertion

Board insertion is the detection of a circuit pack by the system. The DS1C circuit pack will not be inserted unless the circuit pack type, TN574, is entered into the associated field in circuit pack administration screen. The Fiber Endpoint (the EI or the SNI) must also be inserted and be operational for the DS1C circuit pack to function.

Fiber link administration must be completed before the DS1C maintenance can be operational. Fiber links are administered via the **add fiber** command. Fiber

Endpoints, DS1C circuit pack locations and DS1 facility options are entered as a part of the fiber link administration.

Administration steps for a Standard Reliability and High Reliability System (no PNC Duplication) are as follows:

1. Administer carriers via the **add/change cabinet** command
2. Administer circuit packs via the **change circuit-pack** command
3. Administer connectivity and the facility options of the DS1C Complex via the **add/change fiber-link** command

Administration steps for a Critical Reliability System (PNC duplication) are as follows:

1. Enable PNC duplication feature using **change system-parameter customer-option** command
2. Administer carriers via the **add/change cabinet** command
3. Administer circuit packs via the **change circuit-pack** command
4. Administer connectivity and the DS1 facility options of each DS1C Complex via the **add/change fiber-link** command
5. Turn on PNC duplication via the **change system-parameter duplication** command

DS1C LEDs

Seven LEDs provide an indication of the state of the DS1C circuit pack. There is a yellow, a green, and a red LED under software and/or firmware control. There are four green LEDs under hardware control. The four green LEDs indicate, for each DS1C facility, whether a receive signal is present for the DS1 facility.

The red and green LEDs have the traditional use where red means an alarm condition and green indicates that maintenance testing is in progress. The red and green LED is also turned on during circuit pack initialization by firmware. When the control link to the circuit pack is lost, firmware controls the red LED to indicate any alarm condition.

The yellow LED under firmware control is used to indicate the state of the Fiber Interface, the Fiber Channel, and the DS1 Channel in the following manner and order of priority. (The yellow LED remains on for longer periods of time as the DS1C Complex becomes closer to being fully operational.)

1. If the Fiber is Out of Frame or if a Fiber Loss of Signal condition exists, the yellow LED will flicker at a 5 Hz rate (on for 100 mS, off for 100 mS).
2. If the Fiber Channel is down (Converter circuit pack/fiber endpoint communications), the yellow LED will flash at a 1 Hz rate (on for 500 mS, off for 500 mS).

3. If the DS1 Channel is down between the two DS1Cs in the DS1C Complex, the yellow LED will pulse at a 1/2 Hz rate (on for 1 second, off for 1 second).
4. If the SPE communications link is down, the yellow LED will wink off every 2 seconds for 200 ms (2 seconds on, 200 ms off).
5. If all is well with the Fiber Interface and all communications channels, the yellow LED will remain on continuously in a Standard Reliability and High Reliability System configuration. In Critical Reliability systems (duplicated PNC), the active DS1C circuit pack will have its yellow LED on continuously, and the standby DS1C circuit pack will have its yellow LED off.

Clear Firmware-Counters Command

DS1C firmware generates error reports autonomously. This takes place independently of technician-demanded tests. Therefore, the **test board** UUCSS clear command will not affect the error status reported by firmware. The **clear firmware-counters command will clear all firmware-generated errors unconditionally.**

The **clear firmware-counters** UUCSS command sends a downlink message to the SNI circuit packs, causing them to clear out their firmware error counters and failure databases. Once the firmware failure database is cleared, the failure audit test (#777) will pass. If problems still exist, the firmware will increment its error counters and the failure audit test will begin failing again.

This command should not be used as a replacement for the repair procedures associated with the hardware error log entries. This command may be useful if a problem has been fixed and off-board alarms associated with the problem are still active.

Replacing a DS1C Circuit Pack—Simplex PNC

WARNING:
Do not power down a Switch Node carrier to replace a circuit pack.

WARNING:
Replacing a Switch Node Interface, Switch Node Clock, Expansion Interface or DS1 Converter circuit pack on a simplex system disrupts service. The service effect can range from outage of a single EPN to outage of the entire system.

WARNING:
DS1C circuit packs at both ends of the DS1C Complex must be of the same vintage. Therefore DS1C circuit packs at both ends should be replace at the same time to minimize service disruption.

STEPS:

Enter **busyout board** UUCSS	UUCSS represents the cabinet-carrier-slot address of the circuit pack to be replaced. A G3-MT logged in at the EPN Maintenance circuit pack will remain active in spite of the busyout.
Replace the circuit pack	
Wait for the circuit pack to reset	Red and green LEDs will light and then go out.
Enter **release board** UUCSS	**CAUTION:** *Do not busyout any Expansion Interface circuit pack after this point.*
Enter **test alarms long clear** for category **exp-intf**.	
Wait 5 minutes for SNI-BD, FIBER-LK AND DS1C-BD alarms to clear, or enter **clear firmware counters a-pnc**	

Replacing a DS1C Circuit Pack—Duplicated PNC

WARNING:
On a system with duplicated PNC, synchronization may be provided over a combination of active and standby components. This condition is indicated by an OFF-BOARD WARNING alarm against TDM-CLK with error type 2305. Repairs to standby PNC in this state may disrupt service. Otherwise, if the active PNC is functional, replacement of a standby component will not disrupt service.

WARNING:

DS1C circuit packs at both ends of the DS1C Complex must be of the same vintage. Therefore DS1C circuit packs at both ends should be replace at the same time to minimize service disruption.

STEPS:

Enter **status pnc**	Verify that the component to be replaced is on the standby PNC.
Enter **busyout pnc**	
Enter **busyout board** UUCSS	UUCSS represents the cabinet-carrier-slot address of the circuit pack to be replaced.
Replace the circuit pack	
Enter **release board** UUCSS	**CAUTION:** *Do not busyout any Expansion Interface circuit pack after this point.*
Enter **test alarms long clear** for category **exp-intf**	
Wait 5 minutes for SNI-BD, SNI-PEER, FIBER-LK, and DS1C alarms to clear, or enter **clear firmware counters <a-pnc or b-pnc>**	Use the letter designation of the pnc which holds the replaced component (the standby pnc).
Enter **status pnc**	If either PNC state-of-health is not "functional", consult the PNC-DUP section of the Maintenance Manual.
Enter **release pnc**	

Hardware Error Log Entries and Test to Clear Values

DS1C Board Error Log Entries					
Error Type	**Aux Data**	**Associated Test**	**Alarm Level**	**On/Off Board**	**Test to Clear Value**
0*	0	Any	Any	Any	test board UUCSS sh r 1
1(a)		Failure Audit Test #949	MAJOR	ON/OFF	test board UUCSS sh r 1
18(b)		busyout board UCSS	WARNING	OFF	release board UCSS
257(c)		Failure Audit Test #949	MINOR	ON	test board UUCSS sh r 1
513(d)	1	Failure Audit Test #949	MAJOR	ON	test board UUCSS sh r 1
513(e)	2	Failure Audit Test #949	MAJOR	ON	test board UUCSS sh r 1
513(f)	3	Failure Audit Test #949	MAJOR	ON	test board UUCSS sh r 1
513(g)	4	Failure Audit Test #949	MAJOR	ON	test board UUCSS sh r 1
513(h)	5	Failure Audit Test #949	MAJOR	ON	test board UUCSS sh r 1
769(i)	1	Failure Audit Test #949	MINOR	ON/OFF	test board UUCSS sh r 1
769(j)	2	Failure Audit Test #949	MINOR	ON/OFF	test board UUCSS sh r 1
769(k)	3	Failure Audit Test #949	MINOR	ON/OFF	test board UUCSS sh r 1
769(l)	5	Failure Audit Test #949	MINOR	ON/OFF	test board UUCSS sh r 1
769(m)	6	Failure Audit Test #949	MINOR	ON	test board UUCSS sh r 1
769(n)	7	Failure Audit Test #949	MINOR	ON	test board UUCSS sh r 1
1025(o)		Failure Audit Test #949	NONE	OFF	test board UUCSS sh r 1
1281(p)		Failure Audit Test #949	MINOR	OFF	test board UUCSS sh r 1
1793(q)		Failure Audit Test #949	MAJOR	OFF	test board UUCSS sh r 1
2049(r)		Failure Audit Test #949	MAJOR	OFF	test board UUCSS sh r 1
3329(s)		Failure Audit Test #949	WARNING	OFF	test board UUCSS sh r 1

* Run the Short Test Sequence first. If all tests pass, run the Long Test Sequence. Refer to the appropriate test description and follow the recommended procedures.

Notes:

Follow normal escalation procedures if errors cannot be resolved as described below. When problems persist, resetting the DS1C circuit pack via the **reset board** command may temporarily resolve the error condition and restore service until further assistance is provided.

a. If the alarm is on board, then a major hardware error has occurred in a common part of the circuit pack, not circuit or packet specific. Replace the DS1C circuit pack.

   If the alarm is off board, then either a major hardware error has occurred in a common part of the circuit pack, or a good clock signal cannot be recovered from the synchronization source. The synchronization source can be the fiber link or any one of the DS1 facilities.

   1. Enter **display errors** and follow the associated repair procedures for any SYNC, TDM-CLK, and SNC-BD errors.
   2. Enter **display errors** and follow the associated repair procedures for any FIBER-LK and DS1-FAC errors.
   3. If the problem persists, replace the DS1C circuit pack.

b. This error indicates that the DS1C circuit pack has been busied out via the **busyout board** command. To resolve this error, release the DS1C circuit pack via the **release board** command.

c. A minor hardware error has occurred in a common part of the circuit pack, not circuit or packet specific. Replace the DS1C circuit pack.

d. A major hardware problem has occurred that affects only circuit data being received into the DS1C circuit pack. Replace the DS1C circuit pack.

e. A major hardware problem has occurred that affects only circuit data being transmitted from the DS1C circuit pack. Replace the DS1C circuit pack.

f. A major hardware problem has occurred that affects only packet data being received from the DS1C circuit pack. Replace the DS1C circuit pack.

g. A major hardware problem has occurred that affects only packet data being transmitted from the DS1C circuit pack. Replace the DS1C circuit pack.

h. A major lightwave transceiver transmit error occurred that affects data transmitted from the fiber link to the DS1 facility. Replace the DS1C circuit pack.

i. If the alarm is on board, then a minor hardware problem has occurred that affects only circuit data being received into the DS1C circuit pack. Replace the DS1C circuit pack.

   If the alarm is off board, then either a minor hardware problem has occurred that affects only circuit data being received into the DS1C circuit pack or a good clock signal cannot be recovered from one of the DS1 facilities.

   1. Enter **display errors** and follow the associated repair procedures for any SYNC, TDM-CLK, and SNC-BD errors.
   2. Enter **display errors** and follow the associated repair procedures for any DS1-FAC errors.

3. If the problem persists, replace the DS1C circuit pack.

j. If the alarm is on board, then a minor hardware problem has occurred that affects only circuit data being transmitted from the DS1C circuit pack. Replace the DS1C circuit pack.

   If the alarm is off board, then either a minor hardware problem has occurred that affects only circuit data being transmitted from the DS1C circuit pack or a good clock signal cannot be recovered from the fiber channel.

   1. Enter **display errors** and follow the associated repair procedures for any SYNC, TDM-CLK, and SNC-BD errors.
   2. Enter **display errors** and follow the associated repair procedures for any EXP-INTF, SNI-BD, and FIBER-LK errors.
   3. If the problem persists, replace the DS1C circuit pack.

k. If the alarm is on board, then a minor hardware problem has occurred that affects only packet data being received from the DS1C circuit pack. Replace the DS1C circuit pack.

   If the alarm is off board, then either a minor hardware problem has occurred that affects only packet data being received from the DS1C circuit pack or corrupted packets are being received from the packet facility.

   1. Enter **display errors** and follow the associated repair procedures for any EXP-INTF, SNI-BD, and DS1-FAC errors.
   2. If the problem persists enter **display errors** and follow the associated repair procedures for any SYNC, TDM-CLK, and SNC-BD errors.
   3. If the problem still persists, replace the DS1C circuit pack.

l. If the alarm is on board, then a minor FOI transmit error occurred that affects data transmitted from the fiber link to the DS1 facility. Replace the DS1C circuit pack.

   If the alarm is off board, then either a minor FOI transmit error occurred that affects data transmitted from the fiber link to the DS1 facility. or corrupted packets are being received from the packet facility.

   1. Enter **display errors** and follow the associated repair procedures for any EXP-INTF, SNI-BD, and DS1-FAC errors.
   2. If the problem persists enter **display errors** and follow the associated repair procedures for any SYNC, TDM-CLK, and SNC-BD errors.
   3. If the problem still persists, replace the DS1C circuit pack.

m. A minor FOI receive error occurred that affects data received from the DS1 facility and transmitted to the fiber link. Replace the DS1C circuit pack.

n. A minor on-board hardware failure exists on the processor/control hardware on the DS1C circuit pack. Replace the DS1C circuit pack.

o. Transmit packet buffer overflow occurred. This problem may either be caused by excessive HZCS escape byte insertion or a hardware problem on the circuit pack:

   1. Excessive number of zero code substitutions may cause this problem in ZCS line coding mode. Check the DS1 facility line coding in the **Zero Code Suppression** field of the fiber link administration screen, if ZCS line coding is being used, contact T1 Network Service to see if the line coding can be changed to B8ZS.

   2. If the error still exists in B8ZS mode, then there might be a hardware problem on the DS1C circuit pack. Replace the DS1C circuit pack.

p. The facility masks or the clock reference masks do not match between the two DS1C circuit packs in the DS1C Complex. Alarm should clear in 15 minutes.

   1. If the problem persists, reset both DS1C circuit packs in the DS1C Complex via the **reset board** command.

   2. If the problem persists, replace this DS1C circuit pack.

   3. If the problem persists, replace the DS1C circuit pack at the other end of the DS1C Complex.

q. Fiber Loss of Frame Alignment (LFA) alarm occurred at the other end of the DS1C Complex. The DS1C circuit pack at the other end of the DS1C Complex cannot frame up on the signal coming into the circuit pack from the fiber. (The neighbor DS1C circuit pack detected the LFA and relayed this information to this DS1C circuit pack via the DS1 Channel.)

   1. Execute the **list fibers** command to determine the Fiber Endpoint that is connected to the DS1C circuit pack. Enter **display errors** and follow the associated repair procedures for any EXP-INTF, and SNI-BD errors for the Fiber Endpoints. Enter **display errors** and follow the associated repair procedures for any FIBER-LK errors for this fiber link.

   2. If the problem still persists, check for excessive slips and synchronization problems. Enter **display errors** and follow the associated repair procedures for any SYNC, TDM-CLK, and SNC-BD errors.

   3. If the problem still persists, run the Far-end DS1C Circuit Pack Loopback test #788 on this DS1C circuit pack via the **test board UUCSS long** command. This test will indicate if the neighbor DS1C circuit pack hardware is functioning. If this test fails, replace the DS1C circuit pack at the other end of the DS1C Complex.

   4. If the problem still persists, run the Far-end Fiber Optic Terminator (lightwave transceiver) Loopback test #789 on this DS1C circuit pack via the **test board UUCSS long** command. If this test fails,

replace the lightwave transceiver that is connected to the neighbor DS1C circuit pack at the other end of the DS1C Complex. (If the neighbor board is connected to the Fiber Endpoint via metallic cable, then this test will abort.)

5. If the problem still persists, replace connectors and the cable between the neighbor DS1C circuit pack and the Fiber Endpoint at the other end of the DS1C Complex. The cable may be a fiber or a metallic cable.

r. Fiber Loss of Signal (LOS) alarm occurred at the other end of the DS1C Complex. The DS1C circuit pack at the other end of the DS1C Complex does not detect a signal coming into the circuit pack from the fiber. (The neighbor DS1C circuit pack detected the LOS and relayed this information to this DS1C circuit pack via the DS1 Channel.) The yellow LED will flicker at a 5 Hz rate (on for 100 mS, off for 100 mS).

1. Execute the **list fibers** command to determine the Fiber Endpoints that are connected to both ends of this DS1C Complex. Enter **display errors** and follow the associated repair procedures for any EXP-INTF, and SNI-BD errors for the Fiber Endpoints that are administered on this fiber link, and Enter **display errors** and follow the associated repair procedures for any FIBER-LK errors for this fiber link.

2. If the problem still persists, run the Far-end DS1C Circuit Pack Loopback test #788 on this DS1C circuit pack via the **test board UUCSS long** command. This test will show if the neighbor DS1C circuit pack hardware is functioning. If this test fails, replace the DS1C circuit pack at the other end of the DS1C Complex.

3. If the problem still persists, run the Far-end Fiber Optic Terminator (lightwave transceiver) Loopback test #789 on this DS1C circuit pack via the **test board UUCSS long** command. If this test fails, replace the lightwave transceiver that is connected to the neighbor DS1C circuit pack. (If the neighbor board is connected to the Fiber Endpoint via metallic cable, then this test will abort.)

4. If the problem persists, replace connectors and the cable between the neighbor DS1C circuit pack and the Fiber Endpoint at the other end of the DS1C Complex. The cable may be fiber or metallic.

s. This error indicates that excessive slips have occurred on the fiber link between the DS1C board and the Fiber Endpoint.

See MO SYNC for diagnosing slip problems.

System Technician-Demanded Tests: Descriptions And Error Codes

Always investigate tests in the order presented in the table below when inspecting errors in the system. By clearing error codes associated with the *Failure Audit* for example, you may also clear errors generated from other tests in the testing sequence.

Order of Investigation	Short Test Sequence	Long Test Sequence	Reset Board Sequence	D/ND*
Failure Audit (#949)	X	X		ND
DS1 Facilities Connectivity Test (#790)		X		D
Far-end DS1C Circuit Pack Loopback Test (#788)		X		D
Far-end lightwave transceiver Loopback Test (#789)		X		D
Board Options Audit (#795)	X	X		ND
Reset Test (#787)			X	D

* D = Destructive; ND = Nondestructive

NOTE:
Test #984 is not an actual demand maintenance test. This test number is used to report results of the **clear firmware-counters** command. Refer to the table for Test #949 to interpret ABORT codes for Test 984.

Reset Test (#787)

This test is destructive.

DS1C circuit pack is reset via the **reset board** command. When the circuit pack is reset, firmware executes a series of diagnostic tests on the circuit pack. The results of these tests are queried from the board when the board is inserted after completion of the reset sequence. If any one of the diagnostic test fails, the error log will have an entry of error type 1 for this circuit pack location, and the alarm log will have an entry of ON-BOARD MAJOR alarm.

The reset sequence will take about one minute to complete.

Table 9-136. TEST #787 Reset Board

Error Code	Test Result	Description/ Recommendation
2100	ABORT	Could not allocate the necessary system resources to run this test. 1. Retry the command at 1-minute intervals a maximum of 3 times. 2. If the test still aborts, follow standard escalation procedures.
2300	ABORT	The downlink message necessary to run this test could not be sent. 1. Retry the command at 1-minute intervals a maximum of 3 times. 2. If the test still aborts, follow standard escalation procedures.
2301	ABORT	The timer could not be set to wait for the completion of this test. Circuit pack may not be inserted as a result of this. 1. Retry the command at 1-minute intervals a maximum of 3 times. 2. If the test still aborts, follow standard escalation procedures.
2316	ABORT	Fiber link is not administered. Administer the DS1C fiber link via the **add fiber-link** command.
2321	ABORT	DS1C circuit pack is not busied out. Busyout the DS1C circuit pack via the **busyout board** command.

Continued on next page

Table 9-136. TEST #787 Reset Board — *Continued*

Error Code	Test Result	Description/ Recommendation
2500	ABORT	Internal System Error 1. Retry the command at 1-minute intervals a maximum of 3 times. 2. If the test still aborts, follow standard escalation procedures.
	PASS	Reset sequence was executed successfully. This test result does not indicate if the firmware diagnostic tests have passed. Display error log via the **display errors** command to see if any one of the diagnostic firmware test have failed, this will be indicated by an entry of error type 1 for this circuit pack location, and the alarm log will have an entry of ON-BOARD MAJOR alarm, display the alarm log via the **display alarms** command.

Far-end DS1 Converter Circuit Pack Loopback Test (#788)

This test is destructive.

This test starts at the DS1C circuit pack whose equipment location was entered and loops at the far edge of the DS1C circuit pack at the other end of the DS1C Complex. See Figure 9-30 below.

Every part of this test is executed under firmware control and the result is sent back to the maintenance software. Test is executed by sending digital data through every DS1 facility channel. Two different test patterns are used, these are hexadecimal values 55 and AA.

On a Standard Reliability and High Reliability System (no PNC duplication), this test can only be executed at the end-point which is closer to the SPE relative to the neighbor DS1C circuit pack because of its impacts on the system control links, also the completion of the test will be delayed in this configuration to wait for the recovery of the system control links. On a Critical Reliability System (PNC Duplication), test can be executed at any DS1C circuit pack.

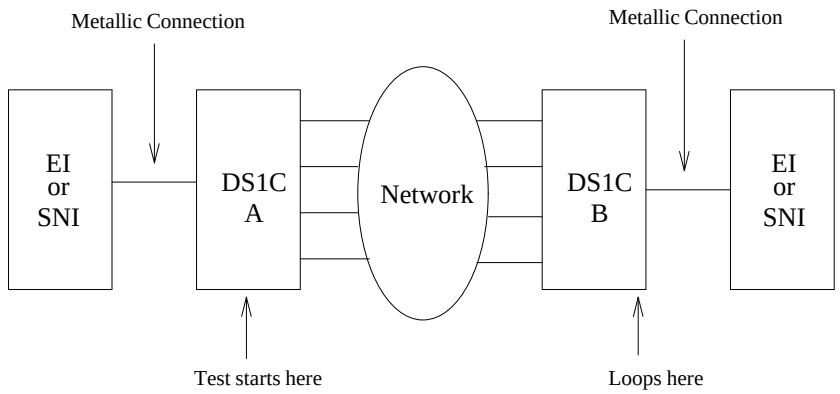

Figure 9-30. Far-end DS1C Loopback Test (#788)

Table 9-137. TEST #788 Far-end DS1 Converter Board Loopback Test

Error Code	Test Result	Description/ Recommendation
2100	ABORT	Could not allocate the necessary system resources to run this test. 1. Retry the command at 1-minute intervals a maximum of 3 times. 2. If the test still aborts, follow standard escalation procedures.
2000	ABORT	Timed out while waiting for a response from the circuit pack. 1. Retry the command at 1-minute intervals a maximum of 3 times. 2. If the test still aborts, follow standard escalation procedures.
2300	ABORT	The downlink message necessary to run this test could not be sent. 1. Retry the command at 1-minute intervals a maximum of 3 times. 2. If the test still aborts, follow standard escalation procedures.
2301	ABORT	The timer could not be set before sending the downlink message necessary to run this test. 1. Retry the command at 1-minute intervals a maximum of 3 times. 2. If the test still aborts, follow standard escalation procedures.
2316	ABORT	Fiber link is not administered. Administer the DS1C fiber link via the **add fiber-link** command.
2321	ABORT	DS1C circuit pack is not busied out. Busyout the DS1C circuit pack via the **busyout board** command.
2332	ABORT	Test is not allowed to execute at the far-end with this system configuration. Execute the test at the other end of the DS1C Complex.

Continued on next page

Table 9-137. TEST #788 Far-end DS1 Converter Board Loopback Test — *Continued*

Error Code	Test Result	Description/ Recommendation
2500	ABORT	Internal System Error 1. Retry the command at 1-minute intervals a maximum of 3 times. 2. If the test still aborts, follow standard escalation procedures.
	FAIL	Far-end DS1C loopback failed. A problem exists between the DS1C A and the DS1C B (see Figure 9-30 on page D-264). 1. If there are facilities that are not **digital data compatible**, then busyout those facilities via the **busyout ds1-facility** command. 2. If the test is executed as a part of an error analysis, then return back to the related section. 3. Enter **display errors** and follow the associated repair procedures for any on-board DS1C-BD errors on this DS1C circuit pack and the DS1C circuit pack at the other end of the DS1C Complex. Enter **display errors** and follow the associated repair procedures for any DS1-FAC errors on the DS1 facilities. 4. Check the DS1 Converter Measurements Report to see if there are facilities with excessive errors, execute command **list measurements ds1-facility summary**. If there are facilities with excessive errors, execute Far-end Internal Loopback test #797 on those facilities, and follow repair procedures described for the test. 5. If the test still fails, replace the DS1C circuit pack at the other end of the DS1C Complex. 6. If the test still fails, replace this DS1C circuit pack. 7. If the test still fails, follow standard escalation procedures.
	PASS	Transmission through the path of the loopback is successful.

Far-end Lightwave Transceiver Loopback Test (#789)

This test is destructive.

This test starts at the DS1C circuit pack whose equipment location was entered and loops at the Fiber Optic Terminator (lightwave transceiver) that is connected to the DS1C circuit pack at the other end of the DS1C Complex. See Figure 9-31 below.

Every part of this test is executed under firmware control and the result is sent back to the maintenance software. Test is executed by sending digital data through every DS1 facility channel. Two different test patterns are used, these are hexadecimal values 55 and AA.

On a Standard and High Reliability System (no PNC duplication), this test can only be executed at the end-point which is closer to the SPE relative to the neighbor DS1C circuit pack because of its impacts on the system control links, also the completion of the test will be delayed in this configuration to wait for the recovery of the system control links. On a Critical Reliability System (PNC Duplication), test can be executed at any DS1C circuit pack.

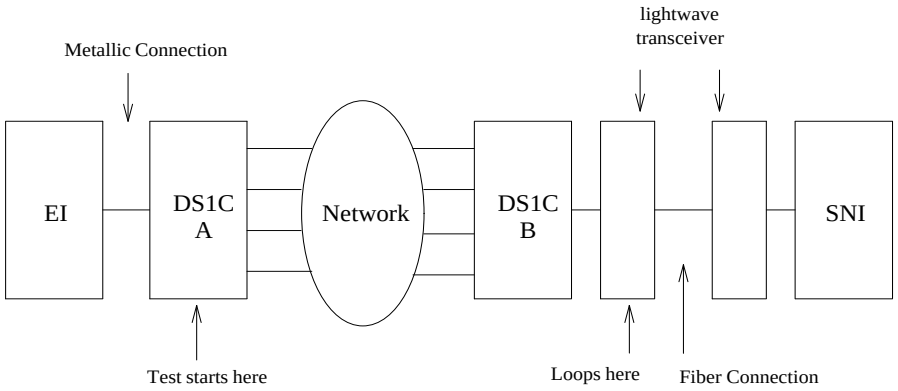

Figure 9-31. Far-end Lightwave Transceiver Loopback Test

Table 9-138. TEST #789 Far-end FOT (Lightwave Transceiver) Loopback Test

Error Code	Test Result	Description/ Recommendation
2100	ABORT	Could not allocate the necessary system resources to run this test. 1. Retry the command at 1-minute intervals a maximum of 3 times. 2. If the test still aborts, follow standard escalation procedures.
1410	ABORT	Llightwave transceiver not present. Neighbor DS1C circuit pack and the Fiber Endpoint are connected via metallic cable.
2000	ABORT	Timed out while waiting for a response from the circuit pack. 1. Retry the command at 1-minute intervals a maximum of 3 times. 2. If the test still aborts, follow standard escalation procedures.
2300	ABORT	The downlink message necessary to run this test could not be sent. 1. Retry the command at 1-minute intervals a maximum of 3 times. 2. If the test still aborts, follow standard escalation procedures.
2301	ABORT	The timer could not be set before sending the downlink message necessary to run this test. 1. Retry the command at 1-minute intervals a maximum of 3 times. 2. If the test still aborts, follow standard escalation procedures.
2316	ABORT	Fiber link is not administered. Administer the DS1C fiber link via the **add fiber-link** command.
2321	ABORT	DS1C circuit pack is not busied out. Busyout the DS1C circuit pack via the **busyout board** command.

Continued on next page

Table 9-138. TEST #789 Far-end FOT (Lightwave Transceiver) Loopback Test — *Continued*

Error Code	Test Result	Description/ Recommendation
2332	ABORT	Test is not allowed to execute at the far-end with this system configuration. Execute the test at the other end of the DS1C Complex.
2500	ABORT	Internal System Error 1. Retry the command at 1-minute intervals a maximum of 3 times. 2. If the test still aborts, follow standard escalation procedures.

Continued on next page

Table 9-138. TEST #789 Far-end FOT (Lightwave Transceiver) Loopback Test — *Continued*

Error Code	Test Result	Description/ Recommendation
	FAIL	Far-end lightwave transceiver loopback failed. A problem exists between the DS1C A and the lightwave transceiver connected to the DS1C B (see Figure 9-31 on page D-267). 1. If there are facilities that are not **digital data compatible**, then busyout those facilities via the **busyout ds1-facility** command. 2. If the test is executed as a part of an error analysis, then return back to the related section. 3. Enter **display errors** and follow the associated repair procedures for any on-board DS1C-BD errors on this DS1C circuit pack and the DS1C circuit pack at the other end of the DS1C Complex. Enter **display errors** and follow the associated repair procedures for any DS1-FAC errors on the DS1 facilities. 4. Check the DS1 Converter Measurements Report to see if there are facilities with excessive errors, execute command **list measurements ds1-facility summary**. If there are facilities with excessive errors, execute Far-end Internal Loopback test #797 on those facilities, and follow repair procedures described for the test. 5. If the test still fails, replace the lightwave transceiver device that is connected to the DS1C circuit pack at the other end of the DS1C Complex. 6. If the test still fails, replace the DS1C circuit pack at the other end of the DS1C Complex. 7. If the test still fails, replace this DS1C circuit pack. 8. If the test still fails, follow standard escalation procedures.
	PASS	Transmission through the path of the loopback is successful.

DS1 Facilities Connectivity Test (#790)

This test is destructive.

The DS1 facilities connectivity test will check the correct connectivity of the DS1 facilities at opposite ends of the DS1C Complex.

Every part of this test is executed under firmware control and the result is sent back to the maintenance software. Test is executed by sending digital data through every DS1 facility channel. Two different test patterns are used, these are hexadecimal values 55 and AA.

On a Standard and High Reliability System (no PNC duplication), this test can only be executed at the end-point which is closer to the SPE relative to the neighbor DS1C circuit pack because of its impacts on the system control links, also the completion of the test will be delayed in this configuration to wait for the recovery of the system control links. On a Critical Reliability System (PNC Duplication), test can be executed at any DS1C circuit pack.

Table 9-139. TEST #790 DS1 Facilities Connectivity Loopback Test

Error Code	Test Result	Description/ Recommendation
2100	ABORT	Could not allocate the necessary system resources to run this test. 1. Retry the command at 1-minute intervals a maximum of 3 times. 2. If the test still aborts, follow standard escalation procedures.
2000	ABORT	Timed out while waiting for a response from the circuit pack. 1. Retry the command at 1-minute intervals a maximum of 3 times. 2. If the test still aborts, follow standard escalation procedures.
2300	ABORT	The downlink message necessary to run this test could not be sent. 1. Retry the command at 1-minute intervals a maximum of 3 times. 2. If the test still aborts, follow standard escalation procedures.

Continued on next page

Table 9-139. TEST #790 DS1 Facilities Connectivity Loopback Test — *Continued*

Error Code	Test Result	Description/ Recommendation
2301	ABORT	The timer could not be set before sending the downlink message necessary to run this test. 1. Retry the command at 1-minute intervals a maximum of 3 times. 2. If the test still aborts, follow standard escalation procedures.
2316	ABORT	Fiber link is not administered. Administer the DS1C fiber link via the **add fiber-link** command.
2321	ABORT	DS1C circuit pack is not busied out. Busyout the DS1C circuit pack via the **busyout board** command.
2332	ABORT	Test is not allowed to execute at the far-end with this system configuration. Execute the test at the other end of the DS1C Complex.
2500	ABORT	Internal System Error 1. Retry the command at 1-minute intervals a maximum of 3 times. 2. If the test still aborts, follow standard escalation procedures.

Continued on next page

Table 9-139. TEST #790 DS1 Facilities Connectivity Loopback Test — *Continued*

Error Code	Test Result	Description/ Recommendation
	FAIL	DS1 facilities connectivity test failed. 1. Enter **display errors** and follow the associated repair procedures for any DS1-FAC errors on the DS1 facilities at both ends of the DS1C Complex. If an alarm exists on a DS1 facility, then this test will fail. 2. Check the DS1 connections, both circuit packs should have their DS1 facilities connected identically. 3. Check the DS1 Converter Measurements Report to see if there are facilities with excessive errors, execute command **list measurements ds1-facility summary**. If there are facilities with excessive errors, execute Far-end Internal Loopback test #797 via the **test ds1-facility UUCSSf long** command on those facilities, and follow repair procedures described for the test. 4. Both circuit packs may not have the same translation information. Run the Board Options Audit test #795 via the **test board UUCSS short** command for both circuit packs in the DS1C Complex to send the options, and check the results of this audit test. This test will not pass until the audit test problems are resolved. 5. If the test still fails, follow standard escalation procedures.
	PASS	DS1 facility connections are correct.

Board Options Audit (#795)

This test is non-destructive.

This test sends the administered circuit pack options to the DS1C circuit pack. Options are sent to both DS1C circuit packs at the same time to prevent any transitional mismatch of options.

Following data is sent to the DS1C circuit pack: system reliability configuration, master and slave end-points for framing, this is determined by the relative position of the circuit pack to the SPE, and the facility masks as given in the **Facility Installed** field of the fiber link administration screen.

Table 9-140. TEST #795 Board Options Audit

Error Code	Test Result	Description/ Recommendation
105	ABORT	The neighbor DS1C circuit pack at the other end of the DS1C Complex is not accessible. 1. Retry the command at 1-minute intervals a maximum of 3 times. 2. The link to the other end of the DS1C Complex may be down. Enter **display errors** and follow the associated repair procedures for any DS1C-BD and DS1-FAC errors. 3. If the test still aborts, follow standard escalation procedures.
2100	ABORT	Could not allocate the necessary system resources to run this test. 1. Retry the command at 1-minute intervals a maximum of 3 times. 2. If the test still aborts, follow standard escalation procedures.
2000	ABORT	Timed out while waiting for a response from the circuit pack. 1. Retry the command at 1-minute intervals a maximum of 3 times. 2. If the test still aborts, follow standard escalation procedures.

Continued on next page

Table 9-140. TEST #795 Board Options Audit — *Continued*

Error Code	Test Result	Description/ Recommendation
2300	ABORT	The downlink message necessary to run this test could not be sent. 1. Retry the command at 1-minute intervals a maximum of 3 times. 2. If the test still aborts, follow standard escalation procedures.
2301	ABORT	The timer could not be set before sending the downlink message necessary to run this test. 1. Retry the command at 1-minute intervals a maximum of 3 times. 2. If the test still aborts, follow standard escalation procedures.
2316	ABORT	Fiber link is not administered. Administer the DS1C fiber link via the **add fiber-link** command.
2500	ABORT	Internal System Error 1. Retry the command at 1-minute intervals a maximum of 3 times. 2. If the test still aborts, follow standard escalation procedures.
	PASS	The options are sent to the circuit pack.

Failure Audit (#949)

This test is non-destructive.

This test queries the DS1C circuit pack for any existing circuit pack or facility failures and any unacknowledged cleared failure messages for auditing purposes. Upon receiving the query request, DS1C firmware sends failure reports to the maintenance software for every error in its failure database.

This test operates on both maintenance objects DS1C-BD and DS1-FAC. Error counts of both maintenance objects (DS1C-BD and DS1-FAC) that are displayed in the error log will be incremented when this test is executed. This test is also executed internally by the maintenance software when an alarm is resolved

Table 9-141. TEST #949 Failure Audit

Error Code	Test Result	Description/ Recommendation
2100	ABORT	Could not allocate the necessary system resources to run this test. 1. Retry the command at 1-minute intervals a maximum of 3 times. 2. If the test still aborts, follow standard escalation procedures.
2000	ABORT	Timed out while waiting for a response from the circuit pack. 1. Retry the command at 1-minute intervals a maximum of 3 times. 2. If the test still aborts, follow standard escalation procedures.
2300	ABORT	The downlink message necessary to run this test could not be sent. 1. Retry the command at 1-minute intervals a maximum of 3 times. 2. If the test still aborts, follow standard escalation procedures.

Continued on next page

Table 9-141. TEST #949 Failure Audit — *Continued*

Error Code	Test Result	Description/ Recommendation
2301	ABORT	The timer could not be set before sending the downlink message necessary to run this test. 1. Retry the command at 1-minute intervals a maximum of 3 times. 2. If the test still aborts, follow standard escalation procedures.
2316	ABORT	Fiber link is not administered. Administer the DS1C fiber link via the **add fiber-link** command.
2500	ABORT	Internal System Error 1. Retry the command at 1-minute intervals a maximum of 3 times. 2. If the test still aborts, follow standard escalation procedures.
	FAIL	The DS1C circuit pack reported failures or retransmitted a cleared failure message. 1. Enter **display errors** and follow the associated repair procedures for any DS1C-BD and DS1-FAC errors. 2. If the test still fails, follow standard escalation procedures.
	PASS	The DS1C circuit pack has no failures.

DT-LN-BD (Data Line Circuit Pack)

MO Name As It Appears in Alarm Log	Alarm Level	Initial System Technician Command to Run (a)	Full Name of MO
DT-LN-BD	MIN	test board UUCSS sh	Data Line Circuit Pack
DT-LN-BD	WRN	test board UUCSS sh	Data Line Circuit Pack

a. UU is the universal cabinet number (1 for PPN, 2 -22 for EPNs). C is the carrier designation (A, B, C, D, or E). SS is the number of the slot in which the circuit pack resides (01 to 21).

Refer to XXX-BD (Common Port Circuit Pack) Maintenance documentation for circuit pack level errors. See also DAT-LINE (Data Line Circuit Port) for related line information.

DTMR-PT (Dual Tone Multi-Frequency Receiver Port)

MO Name As It Appears in Alarm Log	Alarm Level	Initial System Technician Command to Run (a)	Full Name of MO
DTMR-PT	MAJOR	test port UUCSSpp sh	Dual Tone Multi-Frequency Receiver Port (TTR)
DTMR-PT	MINOR	test port UUCSSpp sh	Dual Tone Multi-Frequency Receiver Port (TTR)
DTMR-PT	WARNING	release port UUCSSpp	Dual Tone Multi-Frequency Receiver Port (TTR)

a. UU is the universal cabinet number (1 for PPN, 2 -22 for EPNs). C is the carrier designation (A, B, C, D, or E). SS is the number of the slot in which the circuit pack resides (01 to 21). pp is the two digit port number (01, 02, ...).

Dual Tone Multi-Frequency Receiver Ports (DTMR), also known as Touch-Tone Receivers (TTR), reside on the following circuit packs:

- TN748 (mu-law companding)
- TN420 (A-law companding) [G3r V2]

There are four Dual Tone Multi-Frequency Receiver (DTMR-PT) ports and two General Purpose Tone Detector (GPTD-PT) ports on each Tone Detector circuit pack. The DTMR port is used to detect touch-tone digits that are placed on the Time Division Multiplex (TDM) bus. Examples of touch-tone digits are digits 0 through 9, digit #, and digit *. The ability of the DTMR port to detect touch-tone digits is essential for maintenance of other circuit packs (for example, Tone-Clock circuit pack) and in placing a station-to-station call. Calls originating from a hybrid station *do not* require a DTMR port.

The DTMR-PT maintenance object implements a set of tests to ensure that detection of touch tone digits by the DTMR port is functioning properly. For all Tone Detector circuit pack level errors (DETR-BD), refer to the XXX-BD (Common Port Circuit Pack) maintenance documentation.

Hardware Error Log Entries and Test to Clear Values

Dual Tone Multi-Frequency Receiver Port (TTR) Error Log Entries					
Error Type	**Aux Data**	**Associated Test**	**Alarm Level**	**On/Off Board**	**Test to Clear Value**
0*	0	Any	Any	Any	test port UUCSSpp sh r 1
1	17664	Tone Detector Audit/ Update Test (#43)	MAJOR/ MINOR(a)	ON	test port UUCSSpp r 2
18	0	busyout port UUCSSpp	WARNING	ON	release port UUCSSpp
130 (d)		None	WARNING	ON	test port *UUCSSpp* sh r 2
257 (b)	17666	Tone Detector Audit/ Update Test (#43	MAJOR/ MINOR(a)	ON	test port UUCSSpp r 3
513 (c)	Any	Tone Detection Verification Test (#42	MAJOR/ MINOR(a)	ON	test port UUCSSpp r 3

* Run the Short Test Sequence first. If all tests pass, run the Long Test Sequence. Refer to the appropriate test description and follow the recommended procedures.

Notes:

a. There are two possible alarm levels for this error: Major alarm and Minor alarm. A Major alarm is raised if the total number of DTMR ports currently in service is less than or equal to 1/2 of the administered threshold number. Otherwise, a Minor alarm is raised. In either case, run the Short Test Sequence against the DTMR port and follow the error code procedures for the individual tests.

   The threshold number of DTMR ports for service is administered using the **change system-parameters maintenance** command.

b. The DTMR port lost its translation. Testing the DTMR port is sufficient to reload its translation. If testing the DTMR port does not clear the error, then the Tone Detector circuit pack containing the defective DTMR port should be replaced.

c. This error indicates the DTMR port is having problems detecting touch-tone digits. If this error is being constantly logged, then the Tone Detector circuit pack containing the defective DTMR port should be replaced.

d. This error type indicates that the circuit pack has been removed or has been insane for at least 11 minutes. To clear the error, reinsert or replace the circuit pack.

System Technician-Demanded Tests: Descriptions and Error Codes

Always investigate tests in the order presented in the table below when inspecting errors in the system. By clearing error codes associated with the *Tone Detection Verification Test,* for example, you may also clear errors generated from other tests in the testing sequence.

Order of Investigation	ShortTest Sequence	LongTest Sequence	D/ND*
Tone Detection Verification Test (#42)	X	X	ND
Tone Detector Audit/Update Test (#43)	X	X	ND

* D = Destructive; ND = Nondestructive

Tone Detection Verification Test (#42)

This test checks the touch-tone digits detection capability of the DTMR port

Table 9-142. TEST #42 Tone Detection Verification Test

Error Code	Test Result	Description/ Recommendation
	ABORT	The system was not able to allocate all the resources needed for this test or there was an Internal System Error.
1	ABORT	The system could not allocate all the resources needed to test the DTMR port.
1001	ABORT	The system was unable to put the DTMR port in the appropriate mode to test it.
1002	ABORT	The system could not allocate time slots for the test connection. This could happen when the system is heavily loaded. If the system is not heavily loaded, then test the TDM Bus via the **test tdm [a|b]** command. Refer to the TDM-BUS (TDM Bus) Maintenance documentation for details. 1. Retry the command at 1-minute intervals a maximum of 5 times. 2. If the test continues to abort, escalate the problem.
1003	ABORT	The system could not allocate a Tone Generator for the test connection. This may be caused by a heavy load on the system or by a faulted Tone-Clock. 1. Check to see if there are any alarms against the Tone-Clock in the port network where the test aborted. If so refer to the recommended procedures for TONE-BD or TONE-PT. 2. If a new Tone-Clock has been inserted, allow about 1 minute for maintenance to run on the newly inserted circuit pack. 3. Retry the command at 1-minute intervals a maximum of 5 times. 4. If the test continues to abort, escalate the problem.

Continued on next page

Table 9-142. TEST #42 Tone Detection Verification Test — *Continued*

Error Code	Test Result	Description/ Recommendation
2000	ABORT	Response to the test request was not received within the allowable time period. 1. Retry the command at 1-minute intervals a maximum of 5 times. 2. If the test continues to abort, escalate the problem.
2100	ABORT	Could not allocate the necessary system resources to run this test 1. Retry the command at one-minute intervals a maximum of five times. 2. If the test continues to abort, escalate the problem.
2006	ABORT	DTMF detection failed. On G3r V2 systems, there may be a mismatch between the companding mode administered for the system and that of the Tone Detector circuit pack. 1. Make sure that the companding mode administered for the system matches that of the Tone Detector: mu-law for TN748, A-law for TN420. 2. If the test continues to abort, escalate the problem.
1-3	FAIL	DTMF digits were not correctly detected. 1. Run the Short Test Sequence: **test port UUCSSpp sh r 1**. 2. If the problem persists, the system is still operating properly but system capacity will be reduced. In order to restore the system performance to normal, replace the Tone Detector circuit pack containing the defective DTMR port.
	PASS	The DTMR port is able to detect all the touch-tone digits.

Tone Detector Audit/Update Test (#43)

The DTMR port is refreshed with all time slot information and sanity audit is performed on the DTMR port.

Table 9-143. TEST #43 Tone Detector Audit/Update Test

Error Code	Test Result	Description/ Recommendation
None	ABORT	The system was not able to allocate all the resources needed for this test. 1. Wait 1 minute and try again.
2000	ABORT	Response to the test request was not received within the allowable time period.
2100	ABORT	Could not allocate the necessary system resources to run this test. 1. Retry the command at 1-minute intervals for a maximum of 5 times. 2. If the test continues to abort, escalate the problem.
	FAIL	Hardware audit failed. 1. Run the Short Test Sequence: **test port UUCSSpp sh r 1**. 2. If the problem persists, the system is still operating properly but system capacity will be reduced. In order to restore the system performance to normal, replace the Tone Detector circuit pack containing the defective DTMR port.
	PASS	The DTMR port has been successfully refreshed with its translation.

DUP-CHL (Duplication Interface)

MO Name As It Appears in Alarm Log	Alarm Level	Initial System Technician Command to Run	Full Name of MO
DUP-CHL	MAJOR	test duplication-interface l c	Duplication-Interface
DUP-CHL	MINOR	test duplication-interface l c	Duplication-Interface

The Duplication Channel (DUP-CHL) maintenance object tests both UN330B Duplication Interface circuit packs and the interconnecting cable. These tests, as a group, test end-to-end functionality. That is to say, software on the standby and the active as well as both duplication circuit packs and their cabling must be operational to some degree for these tests to PASS or FAIL. Otherwise, they will ABORT. Tests that fail are recorded in the error and alarm log as errors/alarms against the standby SPE. No errors/alarms are recorded against the active SPE for this maintenance object.

Duplication Interface Functions

The Duplication Interface is comprised of two UN330B circuit packs, one in each of the duplicate SPE carriers, connected by a single Duplication Interface cable. The circuit packs and cable provide the following functions to support SPE duplication.

- Memory Shadowing

  Every write to memory made by the active SPE is also written into the standby SPE memory. Only those memory writes to addresses that lie within certain address boundaries, as defined by memory bounds registers on the Duplication Interface circuit packs, and other qualified writes are shadowed.

- SPE Communication

  Software running on the active SPE communicates with software on the standby SPE by sending and receiving information via the two way, general purpose mailbox mechanism provided by the circuit packs.

- Manual SPE Locking

  The Duplication Interface Circuit packs monitor the relative states-of-health of the two SPEs, and control selection of active/standby status for them.

- SPE Selection

  The SPE-Select switches on the Duplication Interface circuit packs can be used to lock the active SPE and prevent interchanges. See STBY-SPE for instructions.

Three Maintenance Objects are involved in the maintenance of the Duplication Interface circuit packs and their cabling: DUPINT, DUP-CHL, and SPE-SELE. DUPINT runs tests that check the operation of the active Duplication Interface circuit pack. DUP-CHL tests overall functionality of the circuit packs. This utilizes both circuit packs, their cabling, and communication with the standby software. SPE-SELE monitors the position of the select switches located on the front of the Duplication Interface circuit packs.

Testing is directional from the active Duplication Interface circuit pack to the standby Duplication Interface circuit pack. If an interchange has occurred with alarms raised against DUPINT or DUP-CHL, testing cannot resolve or clear these alarms because they are against the wrong circuit packs in the active to standby directional configuration. An interchange is needed to allow testing to resolve or clear these directional alarms.

DUP-CHL Tests

Eight tests run under this MO. Four of these (Status Register Comparison, SMM Channel, Remote SPE Error, and Memory Shadowing) are run at system initialization, during short and long demand testing, and during periodic and scheduled testing. Three other tests (Remote Loop-Around, State-of-Health, and Memory Shadowing Disable) are run only at initialization time (reset system 2 or higher) and during long demand testing. The FIFO Full destructive test is run only as a long demand test.

For long demand testing use **test duplication-interface long clear**. The clear option is needed to clear alarms for error types that don't have an associated test. Since these tests require the turning on and off of memory shadowing, you must enter the command **busyout spe** before the long sequence can be run. Busying out the SPE turns off memory shadowing but handshake communication continues between the SPEs. After testing of DUP-CHL is complete, **release spe** must be entered before memory shadowing is turned on and refresh completes. Memory shadowing is not turned back on if DUPINT, DUP-CHL or other MAJOR alarms pertinent to memory shadowing are not retired. See Chapter 1, "Maintenance Architecture" and STBY-SPE for details.

test dup and **test dup long** run DUPINT *and* DUP-CHL tests. This is the only command that runs short and long test sequences for these maintenance objects.

Replacement procedures for the standby Duplication Interface circuit pack, the active Duplication Interface circuit pack, and the interconnecting cable appear at the end of this section (DUP-CHL). These procedures are designed to prevent disruption of customer service (except when the active Duplication Interface circuit pack must be replaced due to shadowing failure). Each procedure also describes testing after replacement to verify duplication operation when either SPE carrier is active. Test failures in a procedure may direct you to another maintenance object for repairs.

Administration

No **add** or **remove** commands are associated with the Duplication Interface circuit packs.

In-line Errors

If standby SPE software detects problems with the standby Duplication Interface circuit pack, it will report these via the handshake to the active. The report will indicate one of the following:

— An error in reading or writing one or more of the registers on the circuit pack

— A problem with local loop around test

— A problem with the HFAIL bit being set

The last error is a bit set by the Duplication Interface circuit pack's hardware indicating a possible problem with the multiplexing of address and data during memory shadowing. No tests can retire these alarms reported by standby software. If the software stops reporting the errors, the alarms will be retired in about 15 minutes.

Other types of in-line errors are catastrophic ones resulting from FIFO overflow or Remote SPE Error interrupts. If these errors cause an alarm, shadowing will be turned off until the alarm is resolved. Alarms from these errors and the other in-line errors can be resolved by executing **test duplication-interface long clear** with no tests failing.

MAJOR vs. MINOR Alarms

DUP-CHL may have MAJOR or MINOR alarms. MAJOR alarms cause memory shadowing to be turned off. MINOR Alarms do not. DUP-CHL alarms do not lower the Standby State of Health and do not cause an SPE interchange.

Tests run by DUP-CHL are directional in nature: they are run by the active SPE on the standby SPE. Failures of these tests are logged against the standby Duplication Interface circuit pack. Consequently, should an interchange occur, alarms logged against DUP-CHL associated with the formerly standby, now active SPE can not be resolved. An interchange is required to allow testing to resolve or clear these directional alarms.

MO Interactions

test duplication-interface runs DUPINT and DUP-CHL non-destructive tests. **test duplication-interface long clear** runs DUPINT and DUP-CHL destructive and non-destructive tests, and requires that the standby SPE be busied out. Busying out the standby SPE turns off memory shadowing, and lowers the health of the standby to *partially-functional*. This prevents an SPE interchange.

Once all DUPINT, DUP-CHL and any other alarms pertinent to shadowing are retired, a release of the standby will allow shadowing to be turned back on and refresh to complete. See STBY-SPE for more details.

DUP-CHL tests can also fail because shadowing is prevented by of a fault with MO: PKT-INT or MEM-BD. Use the command **status spe** to observe the presence of active alarms and display the alarm log to determine if alarms exist against these related maintenance objects that could cause memory shadowing to fail. MAJOR alarms from these other maintenance objects that cause memory shadowing failures must be resolved before attempting to resolve DUP-CHL alarms. A memory shadowing failure that is caused by another maintenance object such as PKT-INT can also cause a DUP-CHL alarm due to a test failure or in-line errors. Executing the **test duplication-interface long clear** command after repairing the underlying cause of the memory shadowing failure can also resolve a DUP-CHL alarm.

Hardware Error Log Entries and Test to Clear Values

Duplication Channel Error Log Entries					
Error Type	**Aux Data**	**Associated Test**	**Alarm Level†**	**On/Off Board**	**Test to Clear Value**
0*		Any	Any	Any	
001		State-of-Health (#873)	MINOR	ON	test dupl l
257		Memory Shadow Disable Interrupt test (#872)	MINOR	ON	test dupl l
513	any	SMM Channel test (#874)	MINOR	ON	test dupl l
769		Remote Error Interrupt test (#875)	MAJOR	ON	test dupl l
1025		Memory Shadowing test (#876)	MAJOR	ON	test dupl l
1281(a)		none	MAJOR	ON	test dupl l c
1537(b)		none	MINOR	ON	test dupl l c
1793(c)		none	MAJOR	ON	test dupl l c
2049		Remote Loop-Around test (#869)	MAJOR	ON	test dupl l
2305		FIFO Full Interrupt test (#871)	MINOR	ON	test dupl l
2561	any	Status Register Comparison test (#871)	MAJOR	ON	test dupl l
2817(d)	any	none	MAJOR	OFF	test dupl l c

* Run the Short Test Sequence first. If all tests pass, run the Long Test Sequence. Refer to the appropriate test description and follow the recommended procedures.

† DUP-CHL alarms can be resolved only when the alarmed Duplication Interface circuit pack is in the standby SPE carrier.

Notes:

a. Reported by software on the standby via the handshake mechanism. This error indicates that software on the standby has seen the HFAIL bit become set on the standby Duplication Interface circuit pack. The setting of the HFAIL bit is an indication that an error in the multiplexing of the address and data by the Duplication Interface circuit packs has occurred. Three reports of this bit being set will result in a MAJOR alarm that can only be cleared over time (i.e. within 15 minutes of the final report) or by using **test duplication interface long clear**. Recommendation for repair

(only if an alarm is raised): Replace Duplication Interface components starting with the standby Duplication Interface circuit pack. Use SPE Duplication Channel Component Replacement procedures at the end of this DUP-CHL section.

b. Reported by the software on the standby via the handshake. This error indicates that the software on the standby failed tests with one or more of the registers located on the standby Duplication Interface circuit pack. The following Error Types are used to specify the register tests that failed:

1	Control Register Test
2	Shadowing Bounds Register Test
4	Type/Suffix/Vintage Register Test
3, 5, 6, 7	Additive combinations of the above

Three reports of this error will result in a MINOR alarm that can only be cleared over time (i.e. within 15 minutes of the final report) or by using **test duplication interface long clear**. Follow the repair procedures listed in note a above.

c. Reported by the software on the standby the handshake mechanism. This error indicates that the software on the standby failed the Local Loop-Around test on the standby Duplication Interface circuit pack. Three reports of this error will result in a MAJOR alarm that can only be cleared over time (i.e. within 15 minutes of the final report) or by using **test duplication interface long clear**. Follow the repair procedures listed in note a above.

d. Catastrophic in-line error failure.

- Aux Data 1: Remote SPE shadowing bus error

  Possible false alarms can be caused by pulling a standby SPE circuit pack (other than TAPE or DISK) while carrier power is on. Use the following repair procedure for this off circuit pack alarm.

  1. Use the **display alarms** command and select Category **spe**. If any maintenance objects other than DUPINT or DUP-CHL have MAJOR alarms, fix these problems. Problems causing MAJOR alarms for MEM-BD, PKT-INT, SYSAM, H-ADAPTR, and SW-CTL, should be repaired first.
  2. Execute the **test duplication-interface long clear** command to clear this alarm. If any DUPINT or DUP-CHL test fails or aborts, use the repair strategy for that test.
  3. If no DUPINT nor DUP-CHL tests failed, the DUPINT and DUP-CHL alarms are resolved or cleared in this active to standby direction so release the standby SPE from the busyout condition using the **release spe-standby** command and wait (about 10 minutes) for the standby SPE to be refreshed as observed with the **status spe** command.

4. If the standby SPE is refreshed, and fully functional, with no DUPINT or DUP-CHL alarms in the other active to standby direction, this procedure is finished.
5. If the standby SPE is refreshed, and fully functional, with DUPINT or DUP-CHL alarms in the other active to standby direction, use the **reset system interchange** command. Go to step 8.
6. If the standby SPE is not refreshed, and fully functional, with DUPINT or DUP-CHL alarms in the other active to standby direction, arrange a time with the customer to interchange the SPE carriers because this interchange will disrupt service. If the standby SPE is not cycling as indicated by the flashing yellow LED on the standby Processor circuit pack, use the lock-and-power-down procedure described in Chapter 5, "Responding to Alarms and Errors" to power down and power up the standby SPE. If the standby SPE is still not cycling, escalate the problem.
7. Hard switch into the standby SPE by moving both SPE Select switches to the position that selects the standby SPE as active.
8. After the interchange, use the **busyout spe-standby** command. If the SPE Select switches are not in the auto position, move the switches to the auto position. Use the **test duplication-interface long clear** command to resolve the DUPINT and DUP-CHL alarms. If any DUPINT or DUP-CHL test fails, use the repair strategy for that test.
9. If no DUPINT nor DUP-CHL tests fail, the DUPINT and DUP-CHL alarms are resolved or cleared in both directions so release the standby SPE from the busyout condition using the **release spe-standby** command and wait (about 10 minutes) for the standby SPE to be refreshed as observed with the **status spe** command.
10. If the standby SPE is not refreshed and fully functional, escalate the problem.

- Aux Data 3: Remote Duplication Interface circuit pack FIFO overflow

  Execute the **test duplication-interface long clear** command to resolve this alarm. If any DUPINT or DUP-CHL test fails, use the repair strategy for that test. If this alarm is raised again, escalate the problem.

System Technician-Demanded Tests: Descriptions and Error Codes

Always investigate tests in the order presented in the table below when inspecting errors in the system. By clearing error codes associated with the *SMM Channel test* for example, you may also clear errors generated from other tests in the testing sequence.

Order of Investigation	Short Test Sequence	LongTest Sequence	Reset Board Sequence	D/ND*
Status Register Comparison Test (#980)	X	X		ND
Remote Loop-Around Test (#869)		X		D
Dup Mailbox Test (#874)	X	X		ND
Remote Error Interrupt Test (#875)	X	X		ND
Memory Shadowing Test (#876)	X	X		ND
State-of-Health Test (#873)		X		D
Memory Shadowing Disable Test (#872)		X		D
FIFO Full Interrupt Test (#871)		X		D

* D = Destructive; ND = Nondestructive

Remote Loop-Around Test (#869)

This test is destructive.

This test writes a word to a memory address on the active SPE that is inverted and is looped back by the standby Duplication Interface circuit.

Table 9-144. TEST #869 Remote Loop-Around Test

Error Code	Test Result	Description/ Recommendation
1321	ABORT	The faceplate switches on the Duplication Interface circuit packs are not set to **auto**. 1. If the switches are locked because you are using a replacement procedure, continue with this procedure to the step that directs you to unlock the active SPE by moving both switches to **auto**. The next step using the **test duplication-interface long clear** should not abort with this error code. 2. If the switches are locked and a replacement procedure is not being used, start with step 6 of the SPE Duplication Channel Component Replacement procedure for the standby 3. Duplication Interface Circuit pack at the end of this DUP-CHL section to avoid an undesired interchange when unlocking the active SPE. If this same abort is received with both switches in auto, Replace Duplication Interface components starting with the standby Duplication Interface circuit pack. Use SPE Duplication Channel Component Replacement procedures at the end of this DUP-CHL section. In addition to looking for failures, also check for the absence of this 1321 abort code when testing after the procedure directs setting the switches to **auto** after a component replacement.
1405	ABORT	This test did not run because the Duplication Channel was busy. 1. Retry the command at 1-minute intervals a maximum of 5 times. 2. If the test still aborts, escalate the problem.

Continued on next page

Table 9-144. TEST #869 Remote Loop-Around Test — *Continued*

Error Code	Test Result	Description/ Recommendation
1411	ABORT	This test did not run because the standby Duplication Interface circuit pack cannot be detected as being plugged in by the software. 1. If this abort continues to occur, the standby SPE may not have initialized properly. Use the lock-and-power-down procedure described in Chapter 5, "Responding to Alarms and Errors" to power down and power up the standby SPE, but don't replace any circuit packs. 2. If the tests still fails, escalate the problem.
2500	ABORT	Internal System Error 1. Retry the command at 1-minute intervals a maximum of 5 times. 2. If the test still aborts, escalate the problem.
	FAIL	The Remote Loop-Around Test has failed to loop a data word from the active to the standby and back to the active Duplication Interface circuit pack. 1. The standby SPE may not have initialized properly. Use the lock-and-power-down procedure described in Chapter 5, "Responding to Alarms and Errors" to power down and power up the standby SPE, but don't replace any circuit packs. 2. Replace Duplication Interface components starting with the standby Duplication Interface circuit pack. Use SPE Duplication Channel Component Replacement procedures at the end of this DUP-CHL section.
55	FAIL	The attempt to turn off memory shadowing in this DUPINT circuit pack could not be verified in the DUPINT hardware status register. 1. Replace Duplication Interface components starting with the standby Duplication Interface circuit pack. Use SPE Duplication Channel Component Replacement procedures at the end of this DUP-CHL section.

Continued on next page

Table 9-144. TEST #869 Remote Loop-Around Test — *Continued*

Error Code	Test Result	Description/ Recommendation
	PASS	A data word was successfully looped around from the active to the standby and back to the active Duplication Interface circuit pack.

FIFO Full Interrupt Test (#871)

This test is destructive.

This test effectively checks the correct operation of the FIFO located on the standby Duplication Interface circuit pack

Table 9-145. TEST #871 FIFO Full Interrupt Test

Error Code	Test Result	Description/ Recommendation
1321	ABORT	The faceplate switches on the Duplication Interface circuit packs are not set to **auto**. 1. If the switches are locked because you are using a replacement procedure, continue with this procedure to the step that directs you to unlock the active SPE by moving both switches to **auto**. The next step using the **test duplication-interface long clear** should not abort with this error code. 2. If the switches are locked and a replacement procedure is not being used, start with step 6 of the SPE Duplication Channel Component Replacement procedure for the standby Duplication Interface Circuit pack at the end of this DUP-CHL section to avoid an undesired interchange when unlocking the active SPE. 3. If this same abort is received with both switches in auto, Replace Duplication Interface components starting with the standby Duplication Interface circuit pack. Use SPE Duplication Channel Component Replacement procedures at the end of this DUP-CHL section. In addition to looking for failures, also check for the absence of this 1321 abort code when testing after the procedure directs setting the switches to **auto** after a component replacement.

Continued on next page

Table 9-145. TEST #871 FIFO Full Interrupt Test — *Continued*

Error Code	Test Result	Description/ Recommendation
1325	ABORT	Memory shadowing is inhibited from the standby SPE. 1. Shadowing may not be turned on yet, so wait 5 minutes and run the test again. 2. Rerun the test; if the same 1325 abort occurs again, use the **display alarms** command and select Category **spe**. If any maintenance objects other than DUPINT or DUP-CHL have MAJOR alarms, fix these problems. Problems causing MAJOR alarms for MEM-BD, PKT-INT, SYSAM, H-ADAPTR, and SW-CTL should be repaired first. 3. Rerun the test; if the same 1325 abort occurs again, look for other DUPINT or DUP-CHL test failures by using the **busyout spe-standby** if not already busied out and the **test duplication-interface long clear** commands. Fix these problems according to the service documentation for these packs. 4. If this 1325 abort continues to occur, the standby SPE may not have initialized properly. Use the lock-and-power-down procedure described in Chapter 5, "Responding to Alarms and Errors" to power down and power up the standby SPE, but don't replace any circuit packs. 5. If this 1325 abort continues to occur, follow normal escalation procedures.
1411	ABORT	This test did not run because the standby Duplication Interface circuit pack cannot be detected as being plugged in by the software. 1. If this abort continues to occur, the standby SPE may not have initialized properly. Use the lock-and-power-down procedure described in Chapter 5, "Responding to Alarms and Errors" to power down and power up the standby SPE, but don't replace any circuit packs. 2. If the tests still fails, escalate the problem.

Continued on next page

Table 9-145. TEST #871 FIFO Full Interrupt Test — *Continued*

Error Code	Test Result	Description/ Recommendation
1418	ABORT	The HFAIL bit being set in the active Duplication Interface circuit pack prevented this test from running. 1. Run this long demand test sequence and verify that test #870 passes or follow the repair strategy for test #870 until it passes. 2. If test 871 still aborts, escalate the problem.
2000	ABORT	This test did not run because communication with the standby timed out while waiting for a reply to a maintenance message. 1. Retry the command at 1-minute intervals a maximum of 5 times. 2. If this abort continues to occur, the standby SPE may not have initialized properly. Use the lock-and-power-down procedure described in Chapter 5, "Responding to Alarms and Errors" to power down and power up the standby SPE, but don't replace any circuit packs. 3. If the test still aborts, escalate the problem.
2334	ABORT	The hardware mailbox in the standby Duplication Interface circuit pack is not ready to receive messages. 1. Retry the command at 1-minute intervals a maximum of 5 times. 2. If this abort continues to occur, the standby SPE may not have initialized properly. Use the lock-and-power-down procedure described in Chapter 5, "Responding to Alarms and Errors" to power down and power up the standby SPE, but don't replace any circuit packs. 3. If the test still aborts, escalate the problem.
2500	ABORT	Internal System Error 1. Retry the command at 1-minute intervals a maximum of 5 times. 2. If the test still aborts, escalate the problem.

Continued on next page

Table 9-145. TEST #871 FIFO Full Interrupt Test — *Continued*

Error Code	Test Result	Description/ Recommendation
	FAIL	The expected interrupt was not received from the standby Duplication Interface circuit pack when the FIFO was filled to overflowing with test data. 1. Replace Duplication Interface components starting with the standby Duplication Interface circuit pack. Use SPE Duplication Channel Component Replacement procedures at the end of this DUP-CHL section.
53	FAIL	The Duplication Interface circuit pack FIFO flow control flag was not set during this FIFO Full Interrupt Test. 1. Replace Duplication Interface components starting with the standby Duplication Interface circuit pack. Use SPE Duplication Channel Component Replacement procedures at the end of this DUP-CHL section.
54	FAIL	The attempt to turn on memory shadowing in this DUPINT circuit pack could not be verified in the DUPINT hardware status register. 1. Replace Duplication Interface components starting with the standby Duplication Interface circuit pack. Use SPE Duplication Channel Component Replacement procedures at the end of this DUP-CHL section.
	PASS	The FIFO full interrupt was received from the standby Duplication Interface circuit pack when the FIFO was filled to overflowing with test data.

Memory Shadowing Disable Test (#872)

This test is destructive.

This test verifies the correct operation of the interrupt that indicate when shadowing has been turned off (disallowed) by the standby Processor

Table 9-146. Test #872 Memory Shadowing Disable Test

Error Code	Test Result	Description/ Recommendation
1321	ABORT	The faceplate switches on the Duplication Interface circuit packs are not set to **auto**. 1. If the switches are locked because you are using a replacement procedure, continue with this procedure to the step that directs you to unlock the active SPE by moving both switches to **auto**. The next step using the **test duplication-interface long clear** should not abort with this error code. 2. If the switches are locked and a replacement procedure is not being used, start with step 6 of the SPE Duplication Channel Component Replacement procedure for the standby Duplication Interface Circuit pack at the end of this DUP-CHL section to avoid an undesired interchange when unlocking the active SPE. 3. If this same abort is received with both switches in auto, Replace Duplication Interface components starting with the standby Duplication Interface circuit pack. Use SPE Duplication Channel Component Replacement procedures at the end of this DUP-CHL section. In addition to looking for failures, also check for the absence of this 1321 abort code when testing after the procedure directs setting the switches to **auto** after a component replacement.

Continued on next page

Table 9-146. Test #872 Memory Shadowing Disable Test — *Continued*

Error Code	Test Result	Description/ Recommendation
1322	ABORT	Memory shadowing is off, but not inhibited by the standby SPE. 1. Shadowing may not be turned on yet, so use **release spe-standby** if the standby is busied out, wait 5 minutes and run the test again. If the long duplication-interface demand test was being used, investigate any failure or abort from test #872 because this test is expected to turn on shadowing. 2. Rerun the test; if the same 1322 abort occurs again, use the **display alarms** command and select Category **spe**. If any maintenance objects other than DUPINT or DUP-CHL have MAJOR alarms, fix these problems. Problems causing MAJOR alarms for MEM-BD, PKT-INT, SYSAM, H-ADAPTR, and SW-CTL should be repaired first. 3. Rerun the test; if the same 1322 abort occurs again, look for other DUPINT or DUP-CHL test failures by using the **busyout spe-standby** if not already busied out and the **test duplication-interface long clear** commands. Fix these problems according to the service documentation for these packs. 4. If this abort continues to occur, the standby SPE may not have initialized properly. Use the lock-and-power-down procedure described in Chapter 5, "Responding to Alarms and Errors" to power down and power up the standby SPE, but don't replace any circuit packs. 5. If this 1322 abort continues to occur, follow normal escalation procedures.

Continued on next page

Table 9-146. Test #872 Memory Shadowing Disable Test — *Continued*

Error Code	Test Result	Description/ Recommendation
1325	ABORT	Memory shadowing is inhibited from the standby SPE. 1. Shadowing may not be turned on yet, so wait 5 minutes and run the test again. 2. Rerun the test; if the same 1325 abort occurs again, use the **display alarms** command and select Category **spe**. If any maintenance objects other than DUPINT or DUP-CHL have MAJOR alarms, fix these problems. Problems causing MAJOR alarms for MEM-BD, PKT-INT, SYSAM, H-ADAPTR, and SW-CTL should be repaired first. 3. Rerun the test; if the same 1325 abort occurs again, look for other DUPINT or DUP-CHL test failures by using the **busyout spe-standby** if not already busied out and the **test duplication-interface long clear** commands. Fix these problems according to the service documentation for these packs. 4. If this 1325 abort continues to occur, the standby SPE may not have initialized properly. Use the lock-and-power-down procedure described in Chapter 5, "Responding to Alarms and Errors" to power down and power up the standby SPE, but don't replace any circuit packs. 5. If this 1325 abort continues to occur, follow normal escalation procedures.
1405	ABORT	This test did not run because the Duplication Channel was busy. 1. Retry the command at 1-minute intervals a maximum of 5 times. 2. If the test still aborts, escalate the problem.

Continued on next page

Table 9-146. Test #872 Memory Shadowing Disable Test — *Continued*

Error Code	Test Result	Description/ Recommendation
1411	ABORT	This test did not run because the standby Duplication Interface circuit pack cannot be detected as being plugged in by the software. 1. If this abort continues to occur, the standby SPE may not have initialized properly. Use the lock-and-power-down procedure described in Chapter 5, "Responding to Alarms and Errors" to power down and power up the standby SPE, but don't replace any circuit packs. 2. If the tests still fails, escalate the problem.
2000	ABORT	This test did not run because communication with the standby timed out while waiting for a reply to a maintenance message instructing it to disallow memory shadowing. 1. Retry the command at 1-minute intervals a maximum of 5 times. 2. If this abort continues to occur, the standby SPE may not have initialized properly. Use the lock-and-power-down procedure described in Chapter 5, "Responding to Alarms and Errors" to power down and power up the standby SPE, but don't replace any circuit packs. 3. If the test still aborts, escalate the problem.
2334	ABORT	The hardware mailbox in the standby Duplication Interface circuit pack is not ready to receive messages. 1. Retry the command at 1-minute intervals a maximum of 5 times. 2. If this abort continues to occur, the standby SPE may not have initialized properly. Use the lock-and-power-down procedure described in Chapter 5, "Responding to Alarms and Errors". to power down and power up the standby SPE, but don't replace any circuit packs. 3. If the test still aborts, escalate the problem.

Continued on next page

Table 9-146. Test #872 Memory Shadowing Disable Test — *Continued*

Error Code	Test Result	Description/ Recommendation
2500	ABORT	Internal System Error 1. Retry the command at 1-minute intervals a maximum of 5 times. 2. If the test still aborts, escalate the problem.
	FAIL	The expected interrupt that indicates shadowing has been turned off in the standby SPE was not received after this test had instructed the standby SPE to turn off shadowing. 1. Replace Duplication Interface components starting with the standby Duplication Interface circuit pack. Use SPE Duplication Channel Component Replacement procedures at the end of this DUP-CHL section.
54	FAIL	The attempt to turn on memory shadowing in this DUPINT circuit pack could not be verified in the DUPINT hardware status register. 1. Replace Duplication Interface components starting with the standby Duplication Interface circuit pack. Use SPE Duplication Channel Component Replacement procedures at the end of this DUP-CHL section.
	PASS	The interrupt that indicates shadowing has been turned off in the standby SPE was received after this test had instructed the standby SPE to turn off shadowing.

State-of-Health (#873)

This test is destructive.

This test verifies the correct operation of the State-of-Health interrupt

Table 9-147. TEST #873 State-Of-Health Test

Error Code	Test Result	Description/ Recommendation
1321	ABORT	The faceplate switches on the Duplication Interface circuit packs are not set to **auto**. 1. If the switches are locked because you are using a replacement procedure, continue with this procedure to the step that directs you to unlock the active SPE by moving both switches to **auto**. The next step using the **test duplication-interface long clear** should not abort with this error code. 2. If the switches are locked and a replacement procedure is not being used, start with step 6 of the SPE Duplication Channel Component Replacement procedure for the standby Duplication Interface Circuit pack at the end of this DUP-CHL section to avoid an undesired interchange when unlocking the active SPE. 3. If this same abort is received with both switches in auto, Replace Duplication Interface components starting with the standby Duplication Interface circuit pack. Use SPE Duplication Channel Component Replacement procedures at the end of this DUP-CHL section. In addition to looking for failures, also check for the absence of this 1321 abort code when testing after the procedure directs setting the switches to **auto** after a component replacement.
1405	ABORT	This test did not run because the Duplication Channel was busy. 1. Retry the command at 1-minute intervals a maximum of 5 times. 2. If the test still aborts, escalate the problem.

Continued on next page

Table 9-147. TEST #873 State-Of-Health Test — *Continued*

Error Code	Test Result	Description/ Recommendation
1411	ABORT	This test did not run because the standby Duplication Interface circuit pack cannot be detected as being plugged in by the software. 1. If this abort continues to occur, the standby SPE may not have initialized properly. Use the lock-and-power-down procedure described in Chapter 5, "Responding to Alarms and Errors" to power down and power up the standby SPE, but don't replace any circuit packs. 2. If the tests still fails, escalate the problem.
1420	ABORT	The state-of-health of the active SPE is **partially functional.** 1. Use the **display alarms** command selecting the SPE category to determine which alarms have caused the active SPE to have a lower state-of-health. Problems causing MAJOR alarms for MEM-BD, PKT-INT, SYSAM, H-ADAPTR, and SW-CTL should be repaired first. 2. If this abort continues to occur, the standby SPE may not have initialized properly. Use the lock-and-power-down procedure described in Chapter 5, "Responding to Alarms and Errors" to power down and power up the standby SPE, but don't replace any circuit packs. Try this test again. 3. If the problem persists, follow normal escalation procedures.
2000	FAIL	This test did not run because communication with the standby timed out while waiting for a reply to a maintenance message instructing it to lower it's state-of-health. 1. Replace Duplication Interface components starting with the standby Duplication Interface circuit pack. Use SPE Duplication Channel Component Replacement procedures at the end of this DUP-CHL section.

Continued on next page

Table 9-147. TEST #873 State-Of-Health Test — *Continued*

Error Code	Test Result	Description/ Recommendation
2334	ABORT	The hardware mailbox in the standby Duplication Interface circuit pack is not ready to receive messages. 1. Retry the command at 1-minute intervals a maximum of 5 times. 2. If this abort continues to occur, the standby SPE may not have initialized properly. Use the lock-and-power-down procedure described in Chapter 5, "Responding to Alarms and Errors" to power down and power up the standby SPE, but don't replace any circuit packs. 3. If the test still aborts, escalate the problem.
2500	ABORT	Internal System Error 1. Retry the command at 1-minute intervals a maximum of 5 times. 2. If the test still aborts, escalate the problem.
	FAIL	The standby state-of-health was lowered, but no interrupt was received after this test had instructed the standby SPE to lower its state of health. 1. Replace Duplication Interface components starting with the standby Duplication Interface circuit pack. Use SPE Duplication Channel Component Replacement procedures at the end of this DUP-CHL section.
	PASS	The test successfully received the lowered state-of-health interrupt from the standby Duplication Interface circuit pack.

Duplication Channel Test (#874)

This test verifies the correct transmission of a message sent from the active SPE to the standby SPE via the Duplication Interface circuit pack mailbox

Table 9-148. TEST #874 Duplication Channel Test

Error Code	Test Result	Description/ Recommendation
1321	ABORT	The faceplate switches on the Duplication Interface circuit packs are not set to **auto**. 1. If the switches are locked because you are using a replacement procedure, continue with this procedure to the step that directs you to unlock the active SPE by moving both switches to **auto**. The next step using the **test duplication-interface long clear** should not abort with this error code. 2. If the switches are locked and a replacement procedure is not being used, start with step 6 of the SPE Duplication Channel Component Replacement procedure for the standby Duplication Interface Circuit pack at the end of this DUP-CHL section to avoid an undesired interchange when unlocking the active SPE. 3. If this same abort is received with both switches in auto, Replace Duplication Interface components starting with the standby Duplication Interface circuit pack. Use SPE Duplication Channel Component Replacement procedures at the end of this DUP-CHL section. In addition to looking for failures, also check for the absence of this 1321 abort code when testing after the procedure directs setting the switches to **auto** after a component replacement.
1411	ABORT	This test did not run because the standby Duplication Interface circuit pack cannot be detected as being plugged in by the software. 1. If this abort continues to occur, the standby SPE may not have initialized properly. Use the lock-and-power-down procedure described in Chapter 5, "Responding to Alarms and Errors" to power down and power up the standby SPE, but don't replace any circuit packs. 2. If the tests still fails, escalate the problem.

Continued on next page

Table 9-148. TEST #874 Duplication Channel Test — *Continued*

Error Code	Test Result	Description/ Recommendation
2000	ABORT	This test did not run because communication with the standby timed out while waiting for a reply to a maintenance message. 1. Retry the command at 1-minute intervals a maximum of 5 times. 2. If this abort continues to occur, the standby SPE may not have initialized properly. Use the lock-and-power-down procedure described in Chapter 5, "Responding to Alarms and Errors" to power down and power up the standby SPE, but don't replace any circuit packs. 3. If the test still aborts, escalate the problem.
2500	ABORT	Internal System Error 1. Retry the command at 1-minute intervals a maximum of 5 times. 2. If the test still aborts, escalate the problem.
	FAIL	The standby software did not return the test message sent from the active SPE to the standby SPE via the Duplication Interface circuit pack mailbox. 1. Replace Duplication Interface components starting with the standby Duplication Interface circuit pack. Use SPE Duplication Channel Component Replacement procedures at the end of this DUP-CHL section.

Continued on next page

Table 9-148. TEST #874 Duplication Channel Test — *Continued*

Error Code	Test Result	Description/ Recommendation
2334	FAIL	The hardware mailbox in the standby Duplication Interface circuit pack is not ready to receive messages. 1. Retry the command at 1-minute intervals a maximum of 5 times. 2. If this failure continues to occur, the standby SPE may not have initialized properly. Use the lock-and-power-down procedure described in Chapter 5, "Responding to Alarms and Errors" to power down and power up the standby SPE, but don't replace any circuit packs. 3. Replace Duplication Interface components starting with the standby Duplication Interface circuit pack. Use SPE Duplication Channel Component Replacement procedures at the end of this DUP-CHL section. 4. If the test still fails, escalate the problem.
	PASS	The standby software returned the test message sent from the active SPE to the standby SPE via the Duplication Interface circuit pack mailbox.

Remote SPE Error Interrupt Test (#875)

This test is used to check for the correct operation of the Remote SPE Error interrupt

Table 9-149. TEST #875 Remote SPE Error Interrupt Test

Error Code	Test Result	Description/ Recommendation
1321	ABORT	The faceplate switches on the Duplication Interface circuit packs are not set to **auto**. 1. If the switches are locked because you are using a replacement procedure, continue with this procedure to the step that directs you to unlock the active SPE by moving both switches to **auto**. The next step using the **test duplication-interface long clear** should not abort with this error code. 2. If the switches are locked and a replacement procedure is not being used, start with step 6 of the SPE Duplication Channel Component Replacement procedure for the standby Duplication Interface Circuit pack at the end of this DUP-CHL section to avoid an undesired interchange when unlocking the active SPE. 3. If this same abort is received with both switches in auto, Replace Duplication Interface components starting with the standby Duplication Interface circuit pack. Use SPE Duplication Channel Component Replacement procedures at the end of this DUP-CHL section. In addition to looking for failures, also check for the absence of this 1321 abort code when testing after the procedure directs setting the switches to **auto** after a component replacement.

Continued on next page

Table 9-149. TEST #875 Remote SPE Error Interrupt Test — *Continued*

Error Code	Test Result	Description/ Recommendation
1322	ABORT	Memory shadowing is off, but not inhibited by the standby SPE. 1. Shadowing may not be turned on yet, so use **release spe-standby** if the standby is busied out, wait 5 minutes and run the test again. If the long duplication-interface demand test was being used, investigate any failure or abort from test #872 because this test is expected to turn on shadowing. 2. Rerun the test; if the same 1322 abort occurs again, use the **display alarms** command and select Category **spe**. If any maintenance objects other than DUPINT or DUP-CHL have MAJOR alarms, fix these problems. Problems causing MAJOR alarms for MEM-BD, PKT-INT, SYSAM, H-ADAPTR, and SW-CTL should be repaired first. 3. Rerun the test; if the same 1322 abort occurs again, look for other DUPINT or DUP-CHL test failures by using the **busyout spe-standby** if not already busied out and the **test duplication-interface long clear** commands. Fix these problems according to the service documentation for these packs. 4. If this abort continues to occur, the standby SPE may not have initialized properly. Use the lock-and-power-down procedure described in Chapter 5, "Responding to Alarms and Errors" to power down and power up the standby SPE, but don't replace any circuit packs. 5. If this 1322 abort continues to occur, follow normal escalation procedures.

Continued on next page

Table 9-149. TEST #875 Remote SPE Error Interrupt Test — *Continued*

Error Code	Test Result	Description/ Recommendation
1325	ABORT	Memory shadowing is inhibited from the standby SPE. 1. Shadowing may not be turned on yet, so wait 5 minutes and run the test again. 2. Rerun the test; if the same 1325 abort occurs again, use the **display alarms** command and select Category **spe**. If any maintenance objects other than DUPINT or DUP-CHL have MAJOR alarms, fix these problems. Problems causing MAJOR alarms for MEM-BD, PKT-INT, SYSAM, H-ADAPTR, and SW-CTL should be repaired first. 3. Rerun the test; if the same 1325 abort occurs again, look for other DUPINT or DUP-CHL test failures by using the **busyout spe-standby** if not already busied out and the **test duplication-interface long clear** commands. Fix these problems according to the service documentation for these packs. 4. If this 1325 abort continues to occur, the standby SPE may not have initialized properly. Use the lock-and-power-down procedure described in Chapter 5, "Responding to Alarms and Errors" to power down and power up the standby SPE, but don't replace any circuit packs. 5. If this 1325 abort continues to occur, follow normal escalation procedures.
1411	ABORT	This test did not run because the standby Duplication Interface circuit pack cannot be detected as being plugged in by the software. 1. If this abort continues to occur, the standby SPE may not have initialized properly. Use the lock-and-power-down procedure described in Chapter 5, "Responding to Alarms and Errors" to power down and power up the standby SPE, but don't replace any circuit packs. 2. If the tests still fails, escalate the problem.

Continued on next page

Table 9-149. TEST #875 Remote SPE Error Interrupt Test — *Continued*

Error Code	Test Result	Description/ Recommendation
2000	ABORT	This test did not run because communication with the standby timed out while waiting for a reply to a maintenance message. 1. Retry the command at 1-minute intervals a maximum of 5 times. 2. If this abort continues to occur, the standby SPE may not have initialized properly. Use the lock-and-power-down procedure described in Chapter 5, "Responding to Alarms and Errors" to power down and power up the standby SPE, but don't replace any circuit packs. 3. If the test still aborts, escalate the problem.
2334	ABORT	The hardware mailbox in the standby Duplication Interface circuit pack is not ready to receive messages. 1. Retry the command at 1-minute intervals a maximum of 5 times. 2. If this abort continues to occur, the standby SPE may not have initialized properly. Use the lock-and-power-down procedure described in Chapter 5, "Responding to Alarms and Errors" to power down and power up the standby SPE, but don't replace any circuit packs. 3. If the test still aborts, escalate the problem.
2500	ABORT	Internal System Error 1. Retry the command at 1-minute intervals a maximum of 5 times. 2. If the test still aborts, escalate the problem.

Continued on next page

Table 9-149. TEST #875 Remote SPE Error Interrupt Test — *Continued*

Error Code	Test Result	Description/ Recommendation
	FAIL	This test attempted to shadow a word with bad parity from the active SPE into the standby SPE memory, but the expected remote SPE error interrupt from detecting this bad parity word was not received in the active SPE. 1. Replace Duplication Interface components starting with the standby Duplication Interface circuit pack. Use SPE Duplication Channel Component Replacement procedures at the end of this DUP-CHL section.
54	FAIL	The attempt to turn on memory shadowing in this DUPINT circuit pack could not be verified in the DUPINT hardware status register. 1. Replace Duplication Interface components starting with the standby Duplication Interface circuit pack. Use SPE Duplication Channel Component Replacement procedures at the end of this DUP-CHL section.
	PASS	The test successfully created an Remote SPE Error interrupt.

Memory Shadowing Test (#876)

This test checks to see if memory writes in the active SPE that occur within shadowed address space, can be successfully shadowed into the standby SPEs memory

Table 9-150. TEST #876 Memory Shadowing Test

Error Code	Test Result	Description/ Recommendation
1321	ABORT	The faceplate switches on the Duplication Interface circuit packs are not set to **auto**. 1. If the switches are locked because you are using a replacement procedure, continue with this procedure to the step that directs you to unlock the active SPE by moving both switches to **auto**. The next step using the **test duplication-interface long clear** should not abort with this error code. 2. If the switches are locked and a replacement procedure is not being used, start with step 6 of the SPE Duplication Channel Component Replacement procedure for the standby Duplication Interface Circuit pack at the end of this DUP-CHL section to avoid an undesired interchange when unlocking the active SPE. 3. If this same abort is received with both switches in auto, Replace Duplication Interface components starting with the standby Duplication Interface circuit pack. Use SPE Duplication Channel Component Replacement procedures at the end of this DUP-CHL section. In addition to looking for failures, also check for the absence of this 1321 abort code when testing after the procedure directs setting the switches to **auto** after a component replacement.

Continued on next page

Table 9-150. TEST #876 Memory Shadowing Test — *Continued*

Error Code	Test Result	Description/ Recommendation
1322	ABORT	Memory shadowing is off, but not inhibited by the standby SPE. 1. Shadowing may not be turned on yet, so use **release spe-standby** if the standby is busied out, wait 5 minutes and run the test again. If the long duplication-interface demand test was being used, investigate any failure or abort from test #872 because this test is expected to turn on shadowing. 2. Rerun the test; if the same 1322 abort occurs again, use the **display alarms** command and select Category **spe**. If any maintenance objects other than DUPINT or DUP-CHL have MAJOR alarms, fix these problems. Problems causing MAJOR alarms for MEM-BD, PKT-INT, SYSAM, H-ADAPTR, and SW-CTL should be repaired first. 3. Rerun the test; if the same 1322 abort occurs again, look for other DUPINT or DUP-CHL test failures by using the **busyout spe-standby** if not already busied out and the **test duplication-interface long clear** commands. Fix these problems according to the service documentation for these packs. 4. If this abort continues to occur, the standby SPE may not have initialized properly. Use the lock-and-power-down procedure described in Chapter 5, "Responding to Alarms and Errors" to power down and power up the standby SPE, but don't replace any circuit packs. 5. If this 1322 abort continues to occur, follow normal escalation procedures.

Continued on next page

Table 9-150. TEST #876 Memory Shadowing Test — *Continued*

Error Code	Test Result	Description/ Recommendation
1325	ABORT	Memory shadowing is inhibited from the standby SPE. 1. Shadowing may not be turned on yet, so wait 5 minutes and run the test again. 2. Rerun the test; if the same 1325 abort occurs again, use the **display alarms** command and select Category **spe**. If any maintenance objects other than DUPINT or DUP-CHL have MAJOR alarms, fix these problems. Problems causing MAJOR alarms for MEM-BD, PKT-INT, SYSAM, H-ADAPTR, and SW-CTL should be repaired first. 3. Rerun the test; if the same 1325 abort occurs again, look for other DUPINT or DUP-CHL test failures by using the **busyout spe-standby** if not already busied out and the **test duplication-interface long clear** commands. Fix these problems according to the service documentation for these packs. 4. If this 1325 abort continues to occur, the standby SPE may not have initialized properly. Use the lock-and-power-down procedure described in Chapter 5, "Responding to Alarms and Errors" to power down and power up the standby SPE, but don't replace any circuit packs. 5. If this 1325 abort continues to occur, follow normal escalation procedures.
1411	ABORT	This test did not run because the standby Duplication Interface circuit pack cannot be detected as being plugged in by the software. 1. If this abort continues to occur, the standby SPE may not have initialized properly. Use the lock-and-power-down procedure described in Chapter 5, "Responding to Alarms and Errors" to power down and power up the standby SPE, but don't replace any circuit packs. 2. If the tests still fails, escalate the problem.

Continued on next page

Table 9-150. TEST #876 Memory Shadowing Test — *Continued*

Error Code	Test Result	Description/ Recommendation
2000	ABORT	This test did not run because communication with the standby timed out while waiting for a reply to a maintenance message. 1. Retry the command at 1-minute intervals a maximum of 5 times. 2. If this abort continues to occur, the standby SPE may not have initialized properly. Use the lock-and-power-down procedure described in Chapter 5, "Responding to Alarms and Errors" to power down and power up the standby SPE, but don't replace any circuit packs. 3. If the test still aborts, escalate the problem.
2500	ABORT	Internal System Error 1. Retry the command at 1-minute intervals a maximum of 5 times. 2. If the test still aborts, escalate the problem.
	FAIL	Test data retrieved from the standby SPE memory didn't match test data written into the active SPE memory and shadowed to the standby SPE memory. 1. Replace Duplication Interface components starting with the standby Duplication Interface circuit pack. Use SPE Duplication Channel Component Replacement procedures at the end of this DUP-CHL section.
54	FAIL	The attempt to turn on memory shadowing in this DUPINT circuit pack could not be verified in the DUPINT hardware status register. 1. Replace Duplication Interface components starting with the standby Duplication Interface circuit pack. Use SPE Duplication Channel Component Replacement procedures at the end of this DUP-CHL section.
	PASS	The test was able to successfully shadow, within shadowed address space, writes in the active SPE into the standby SPE memory.

Status Register Comparison Test (#980)

The Status Register Comparison Test compares active Duplication Interface circuit pack remote status with standby Duplication Interface circuit pack local status

Table 9-151. TEST #980 Status Register Comparison Test

Error Code	Test Result	Description/ Recommendation
1321	ABORT	The faceplate switches on the Duplication Interface circuit packs are not set to **auto**. 1. If the switches are locked because you are using a replacement procedure, continue with this procedure to the step that directs you to unlock the active SPE by moving both switches to **auto**. The next step using the **test duplication-interface long clear** should not abort with this error code. 2. If the switches are locked and a replacement procedure is not being used, start with step 6 of the SPE Duplication Channel Component Replacement procedure for the standby Duplication Interface Circuit pack at the end of this DUP-CHL section to avoid an undesired interchange when unlocking the active SPE. 3. If this same abort is received with both switches in auto, Replace Duplication Interface components starting with the standby Duplication Interface circuit pack. Use SPE Duplication Channel Component Replacement procedures at the end of this DUP-CHL section. In addition to looking for failures, also check for the absence of this 1321 abort code when testing after the procedure directs setting the switches to **auto** after a component replacement.

Continued on next page

Table 9-151. TEST #980 Status Register Comparison Test — *Continued*

Error Code	Test Result	Description/ Recommendation
1411	ABORT	This test did not run because the standby Duplication Interface circuit pack cannot be detected as being plugged in by the software. 1. If this abort continues to occur, the standby SPE may not have initialized properly. Use the lock-and-power-down procedure described in Chapter 5, "Responding to Alarms and Errors" to power down and power up the standby SPE, but don't replace any circuit packs. 2. If the tests still fails, escalate the problem.
2000	ABORT	This test did not run because communication with the standby timed out while waiting for a reply to a maintenance message requesting the standby status. 1. Retry the command at 1-minute intervals a maximum of 5 times. 2. If this abort continues to occur, the standby SPE may not have initialized properly. Use the lock-and-power-down procedure described in Chapter 5, "Responding to Alarms and Errors" to power down and power up the standby SPE, but don't replace any circuit packs. 3. If the test still aborts, escalate the problem.
2334	ABORT	The hardware mailbox in the standby Duplication Interface circuit pack is not ready to receive messages. 1. Retry the command at 1-minute intervals a maximum of 5 times. 2. If this abort continues to occur, the standby SPE may not have initialized properly. Use the lock-and-power-down procedure described in Chapter 5, "Responding to Alarms and Errors" to power down and power up the standby SPE, but don't replace any circuit packs. 3. If the test still aborts, escalate the problem.

Continued on next page

Table 9-151. TEST #980 Status Register Comparison Test — *Continued*

Error Code	Test Result	Description/ Recommendation
2500	ABORT	Internal System Error 1. Retry the command at 1-minute intervals a maximum of 5 times. 2. If the test still aborts, escalate the problem.
Any	FAIL	The remote status in the active did not match the local status in the standby Duplication Interface circuit pack, or the remote status in the standby did not match the local status in the active Duplication Interface circuit pack. 1. Replace Duplication Interface components starting with the standby Duplication Interface circuit pack. Use SPE Duplication Channel Component Replacement procedures at the end of this DUP-CHL section.
	PASS	The comparison of remote with local status matched in both directions for the pair of Duplication Interface circuit packs.

Replacing Duplication Channel Components

The SPE Duplication Channel consists of a Duplication Interface circuit pack (DUPINT) in the active SPE, a DUPINT in the standby SPE, and an interconnecting cable. The following sections contain step-by-step procedures for replacing each of these components. DUPINT replacement must be done on the standby SPE to prevent loss of service.

If replacement of standby DUPINT circuit pack does not repair the Duplication Channel, replace the DUPINT circuit pack on the active SPE. If replacement of both of these circuit packs does not repair the Duplication Channel, replace the interconnecting cable.

Replacing the STANDBY Duplication Interface (DUPINT) Circuit Pack

This procedure is used after a **test duplication-interface long** displays a failure for at least one of the tests that indict the standby DUPINT. The procedure to interchange the active DUPINT to the standby mode also uses this procedure.

1. Use the **busyout spe-standby** command to lower the standby State of Health to **partially functional** to prevent an unwanted interchange during replacement and testing of the standby DUPINT.
2. Manually lock the active SPE. by moving the SPE select switches located on the front of the DUPINT circuit packs to positions where they are both selecting the current active SPE.
3. Whenever locking the SPE, *always* verify that the active PPN Tone/Clock is in the active SPE carrier *before* doing any repair activity on the standby SPE carrier such as powering down. Enter **status port-network 1** to check which clock is active. Remove power from the standby SPE carrier by pulling the power cords located on both sides of the carrier. *Power must be removed from the standby carrier in order for the replacement DUPINT to initialize properly.*
4. Set the SPE-select switch on the new DUPINT circuit pack to the same position as the circuit pack you are going to replace. Then remove and replace the defective circuit pack.

   CAUTION:
   The new standby DUPINT must have its SPE Select switch set to lock the currently active carrier. The switch should be in the same position as the removed circuit pack.

5. Apply power to the standby SPE carrier.

6. Verify that the standby is up. Regular flashing of the yellow LED on the Processor circuit pack indicates that the standby SPE is up and cycling. If the yellow LED is not flashing after 5 minutes test the standby SPE by using the lock-and-power-down procedure described in Chapter 5, "Responding to Alarms and Errors".
7. With the standby SPE still busied out to prevent an interchange, unlock the active SPE by moving the SPE Select Switches back to the Auto position.
8. Use the **status spe** command to verify that handshake is up. Wait up to 10 minutes for handshake to come up.
9. If **status spe** shows MAJOR alarms, enter the **display alarms** command for category **spe**. Resolve alarms for maintenance objects other than STBY-SPE, DUPINT and DUP-CHL first.
10. Execute the **test duplication-interface long clear** command to resolve the DUPINT and DUP-CHL alarms. If any test aborts, but none fail, run this test again at 1-minute intervals up to a maximum of 5 times, until all tests pass.
    - If no DUPINT or DUP-CHL tests failed, the DUPINT and DUP-CHL alarms are resolved or cleared in this active to standby direction. Continue with step 11.
    - If any DUPINT or DUP-CHL tests failed, and the standby DUPINT has been replaced, but the active DUPINT pack has *not* been replaced, replace the active DUPINT using the procedure in the following section.
    - If any DUPINT or DUP-CHL tests failed, and *both* DUPINTs have been replaced, but the DUPINT interconnecting cable has not been replaced, replace the DUPINT interconnecting cable using the replacement procedure for the DUPINT interconnecting cable.
    - If any DUPINT or DUP-CHL tests failed, and both DUPINT circuit packs and the interconnecting cable have been replaced, escalate the problem.
11. Release the standby SPE from the busyout using the **release spe-standby** command and wait about 10 minutes for the standby SPE to be refreshed. If the standby SPE fails to refresh, as observed with **status spe**, follow normal escalation procedures.
12. If the SPE Standby State-of-Health is functional as observed with **status spe**, enter the **reset system interchange** command. With this SPE now active, execute **busyout spe-standby** and use **test duplication-interface long clear** to test the Duplication Channel in the other direction.
    - If all tests pass, continue with step 13.
    - If any test fails, and the currently *standby* DUPINT circuit pack has not already been replaced, replace it now by starting at the beginning of this procedure. This circuit pack has passed tests while on the active carrier, but is still the most likely circuit pack to be faulted, especially if DUP-CHL tests are failing.

- If any test fails, and the currently *active* DUPINT circuit pack has not already been replaced, replace it now by starting at the beginning of the replacement procedure for the *active* DUPINT. This circuit pack has passed tests while on the standby carrier, but failed when on the active carrier, especially if DUPINT tests are failing.
- If any test fails, and *both* DUPINTs have been replaced, replace the DUPINT interconnecting cable by using the procedure on the following pages.

13. Execute the **release spe-standby** command and wait for memory shadowing and standby refreshed to occur as verified with the **status spe** command.
    - If the standby is refreshed within 10 minutes, this replacement procedure is successfully finished.
    - If the standby is not refreshed within 10 minutes, continue with step 14.
14. Use the **status spe** command. If the status shows MAJOR alarms, use the **display alarms** command with the **spe** category selection. Resolve alarms for maintenance objects other than DUPINT and DUP-CHL.
    - If the standby is refreshed within 10 minutes, and the DUPINT and DUP-CHL alarms are resolved, this replacement procedure is successfully finished.
    - If the standby is not refreshed within 10 minutes, escalate the problem.
    - If the DUPINT and DUP-CHL alarms are not resolved, and the standby DUPINT has been replaced, but the *active* DUPINT has *not* been replaced, replace the active DUPINT using the procedure in the following section.
    - If the DUPINT and DUP-CHL alarms are not resolved, and both DUPINTs have been replaced, but the DUPINT interconnecting cable has *not* been replaced during this repair activity, replace the DUPINT interconnecting cable using the procedure for interconnecting cable.
    - If the DUPINT and DUP-CHL alarms are not resolved, and both DUPINT circuit packs and the interconnecting cable have been replaced, escalate the problem.

Replacing the ACTIVE Duplication Interface (DUPINT) Circuit Pack

This procedure is used after a **test duplication-interface (long)** displays a failure for at least one of the tests that indict the active DUPINT, or when replacement of the active DUPINT is otherwise recommended. The active SPE

must be interchanged to the standby mode before replacing this DUPINT to minimize disruption of customer service. Replacement of the DUPINT in the standby SPE carrier is described in the previous section.

1. If the **status spe** command displays `Standby Busied? yes`, release the standby SPE by using the **release spe-standby** command. If the System was recently interchanged, or if the standby SPE was busied out and released, or if some other recent maintenance was performed on the standby SPE, it may take up to 10 minutes for the standby SPE to be refreshed. Use **status spe** to determine if `State of Health: functional` for the `Mode: standby` side is displayed.
   - If handshake is down, continue with step 5.
   - If the Standby State of Health is other than functional, continue with step 2.
   - If the Standby State of Health is functional, enter the command **reset system interchange**.
     - *If the SPE interchange occurred,* replace the standby DUPINT using the replacement procedure for the standby DUPINT.
     - *If the SPE interchange did not occur* continue with step 2.
2. If there are no major alarms against MEM-BD, PKT-INT, SYSAM, H-ADAPTR, or SW-CTL, continue with step 5 in this procedure.
3. If MAJOR alarms cannot be resolved for MEM-BD, PKT-INT, SYSAM, H-ADAPTR, or SW-CTL using their associated maintenance procedures, escalate the problem. These MAJOR alarms must be resolved before continuing with DUPINT and DUP-CHL Maintenance.
4. If any MAJOR alarms were resolved for MEM-BD, PKT-INT, SYSAM, H-ADAPTR, or SW-CTL using their associated maintenance procedures, test DUPINT and DUP-CHL again: use **busyout spe-standby** followed by **test duplication-interface long clear** and see if any tests fail. Enter **release spe-standby**.
   - If any test fails, continue with step 5 in this procedure.
   - If all tests pass, wait up to 10 minutes and enter **status spe** to determine whether `Standby Refreshed? yes` and `State of Health: functional` are displayed for the standby SPE.

     If the above are not displayed, go to Step 5 of this procedure.

     If the above are displayed, enter the command **reset system interchange**.
     - If this interchange was not successful, continue with step 5 in this procedure.

- If this interchange was successful, use the **busyout spe-standby** command followed by the **test duplication-interface long clear** command and see if any tests fail. Execute **release spe-standby**.

  If all tests pass, the duplication channel has been successfully tested in both directions and this procedure is finished.

  If any test fails, replace the standby DUPINT using the previous replacement procedure for the standby DUPINT.

5. Use the **status spe** command to determine if `Standby Refreshed? yes` for `Mode: standby` is displayed.
   - *If the standby is refreshed,* a hard switch will not affect customer service. Continue with step 6.
   - *If the standby is not refreshed,* you will need to execute a hard switch that *will* affect customer service (by at least dropping current calls). Notify the customer and establish a time to perform this disruptive maintenance.
6. Hard switch into the standby SPE by moving both SPE Select switches to the position that selects the standby SPE as active.
   - *If the interchange was successful,* replace the standby DUPINT using the replacement procedure for the standby DUPINT.
   - *If the interchange was not successful,* escalate the problem.

Replacing the Duplication Interface Interconnecting Cable

This procedure is used after replacing both DUPINT circuit packs has failed to resolve the duplication channel failure.

1. Use the **busyout spe-standby** command to lower the standby State of Health to partially functional to prevent an unwanted interchange during the Duplication Interconnecting cable replacement and testing.
2. Manually lock the active SPE. This is done by moving the SPE select switches located on the front of the DUPINTs to positions where they are both selecting the current active SPE.
3. Whenever locking the SPE, *always* verify that the active PPN Tone/Clock is in the active SPE carrier *before* doing any repair activity on the standby SPE carrier such as powering down. Enter **status port-network 1** to check which clock is active. Remove power from the standby SPE carrier by pulling the power cords located on both sides of the carrier. **Power must be removed from the standby carrier. If power is not removed from the standby SPE carrier before the interconnecting cable is disconnected, an interchange to the standby SPE will occur, causing disruption of customer service.**

4. Examine the cable and associated connectors for obvious problems. Check for broken or bent pins, and repair or replace before installing the new cable.

   CAUTION:
   This cable interconnects the powered down standby and the active carriers. Use extreme caution. Shorting pins can cause the active SPE to fail. Consider replacing this cable during periods of light traffic or, ideally, when both carriers are powered down (system out of service).

   Replace the cable observing proper connector location and orientation.

5. Apply power to the standby SPE carrier.
6. Verify that the standby is up. Regular flashing of the yellow LED on the Processor circuit pack indicates that the standby SPE is up and cycling. If the yellow LED is not flashing after 5 minutes test the standby SPE by using the lock-and-power-down procedure described in Chapter 5, 'Responding to Alarms and Errors".
7. With the standby SPE still busied out to prevent an interchange, unlock the active SPE by moving the SPE Select Switches back to the Auto position.
8. Use the **status spe** command to verify that handshake is up. Wait up to 10 minutes for handshake to come up.
9. If the status shows MAJOR alarms, use the **display alarms** command for category **spe**. Resolve alarms for maintenance objects other than DUPINT and DUP-CHL first.
10. Execute the **test duplication-interface long clear** command to resolve the DUPINT and DUP-CHL alarms. If any tests abort, but no tests fail, run the test again at 1-minute intervals up to a maximum of 5 times with the goal of observing all tests passing.
    - If no DUPINT nor DUP-CHL tests fail, the DUPINT and DUP-CHL alarms are resolved or cleared in this active to standby direction. Continue with step 11.
    - You should by now have replaced both DUPINT circuit packs and the interconnecting cable. If the DUPINT and DUP-CHL alarms are not resolved, follow normal escalation procedures.
11. Release the standby SPE from the busyout condition using the **release spe-standby** command and wait (about 10 minutes) for the standby SPE to be refreshed as observed with the **status spe** command. If the standby SPE is not refreshed, escalate the problem.
12. If the SPE Standby State-of-Health is functional as observed with the **status spe** command, use the **reset system interchange** command. With the other SPE now active, execute the **busyout spe-standby** command

and use the **test duplication-interface long clear** command to test the Duplication Channel in the other direction, resolving any outstanding alarms against DUPINT and DUP-CHL.

- If these tests pass, continue with step 13.
- If any test fails, escalate the problem.

13. Execute the **release spe-standby** command and wait for memory shadowing and standby refreshed to complete as verified with the **status spe** command.
    - If the standby is not refreshed within 10 minutes, continue with step 14.
    - If the standby is refreshed within 10 minutes, this replacement procedure is successfully finished.
14. Use the **status spe** command. If the status shows MAJOR alarms, use the **display alarms** command with the **spe** category selection. Resolve alarms for maintenance objects other than DUPINT and DUP-CHL.
    - If the standby is not refreshed within 10 minutes, or the DUPINT and DUP-CHL alarms are not resolved, escalate the problem.
    - If the standby is refreshed within 10 minutes, and the DUPINT and DUP-CHL alarms are resolved, this replacement procedure is successfully finished.

DUPINT (Duplication Interface Circuit Pack)

MO Name As It Appears in Alarm Log	Alarm Level	Initial System Technician Command to Run	Full Name of MO
DUPINT	MAJOR	test duplication-interface l c	Duplication Interface circuit pack
DUPINT	MINOR	test duplication-interface l c	Duplication Interface circuit pack

The Duplication Interface (DUPINT) maintenance object tests the active UN330B Duplication Interface circuit pack. Tests that fail are recorded in the error and alarm log as errors/alarms against the active Duplication Interface circuit pack. No errors/alarms are recorded against the standby Duplication Interface circuit pack by this maintenance object.

Three Maintenance Objects are utilized in the maintenance of the Duplication Interface circuit pack and their cabling. These are DUPINT, DUP-CHL, and SPE-SELE. The first of these, DUPINT, is composed of tests that check the operation of the active Duplication Interface circuit pack. The second maintenance object, DUP-CHL, test overall functionality of the circuit pack. This requires both circuit pack, their cabling, and communication with the standby software. The third and final MO is SPE-SELE. SPE-SELE monitors the position of the select switches located on the front of the Duplication Interface circuit pack.

Testing is directional from the active Duplication Interface circuit pack to the standby Duplication Interface circuit pack. If an interchange has occurred with alarms raised against DUPINT or DUP-CHL, testing cannot resolve or clear these alarms because they are against the wrong circuit pack in the active to standby directional configuration. An interchange is needed to allow testing to resolve or clear these directional alarms.

Duplication Interface Maintenance Operation

There are six tests that comprise DUPINT. The not-destructive Active DUPINT HFAIL test is run as scheduled, periodic and demand short. The Active DUPINT Reset test is the destructive version of the HFAIL test and is only run at initialization time and on demand long. They are not run as part of periodic or scheduled maintenance. Test failures or in-line errors for this maintenance object are logged against the active Duplication Interface circuit pack.

The five destructive tests run by DUPINT are only run during initialization (reset system 2 or worse) and on demand with the command line of **test duplication-interface long**. The clear option is needed to clear alarms for error types that don't have an associated test when all of the tests pass or abort. Since

these tests require the turning on and off of memory shadowing, you must enter the command **busyout spe** before the long sequence may be run. The busying out of the SPE turns off memory shadowing but handshaking continues between the active and standby SPEs. After testing of DUPINT is complete, the command **release spe** must be entered before memory shadowing is allowed to be turned on and memory refresh to complete. Memory shadowing is not turned back on if DUPINT, DUP-CHL or other MAJOR alarms pertinent to memory shadowing are not retired. See STBY-SPE for more details as to how the turning on/off of shadowing is controlled.

The **test duplication-interface and test duplication-interface long** commands run DUPINT and DUP-CHL tests. This is the only command that can run short and long test sequences for these maintenance objects.

Replacement procedures are provided for the standby Duplication Interface circuit pack, the active Duplication Interface circuit pack, and the interconnecting cable. These procedures are designed to prevent disruption of customer service except when the active Duplication Interface circuit pack must be replaced because of a failure that prevents memory shadowing. Each procedure also describes testing after replacement to verify duplication operation when SPE carrier A is active and when SPE carrier B is active. Test failures in a procedure can direct you to another procedure for the replacement and testing of a related component.

Administration

No **add** or **remove** commands are associated with the Duplication Interface circuit pack.

In-line Errors

The Local FIFO Full Failure and DUPINT Driver Failure error types can raise alarms when in-line errors are received. There are no tests that can retire these reported alarms. The command line option of **test duplication-interface long clear** with the long test sequence and the clear option is needed to clear alarms for these in-line errors. The in-line error types are cleared by this command only if no tests fail.

MAJOR vs. MINOR Alarms

DUPINT may have MAJOR or MINOR alarms. Whenever a MAJOR alarm is raised, memory shadowing to the standby is turned off. A MINOR alarm does not turn off shadowing. Neither type of alarm causes an SPE interchange.

Maintenance Object Interactions

The command **test duplication-interface** runs both DUPINT and DUP-CHL non-destructive tests. The command **test duplication-interface long** runs both DUPINT and DUP-CHL destructive and non-destructive tests. The second command can only be run if the standby SPE is busied out. This busy out of the standby SPE turns off memory shadowing, and lowers the health of the standby to partially-functional; thereby preventing a possible interchange between the active and standby SPE carriers. Then, if all DUPINT and DUP-CHL alarms are retired, a release of the standby SPE will allow memory shadowing to be turned back on (if no further alarms pertinent to memory shadowing are present) and refresh to complete. See STBY-SPE for more details as to how the turning on/off of shadowing is controlled.

Error Log Entries and Test to Clear Values

Duplication Interface Circuit Pack Error Log Entries					
Error Type	**Aux Data**	**Associated Test**	**Alarm Level†**	**On/Off Board**	**Test to Clear Value**
0*	0	Any	Any	Any	
1		Control Register test (#865)	MAJOR	ON	test dupl l
257	Any	Mailbox Loop-around test (#866)	MAJOR	ON	test dupl l
513	Any	Local Loop-around test (#867)	MAJOR	ON	test dupl l
769	Any	Memory Shadowing Bounds Test (#868)	MAJOR	ON	test dupl l
2049 (a)	Any	Active DUPINT Reset Test (#870) Active DUPINT STDONE/ HFAIL Check Test (#979)	MINOR	ON	test dupl l
3073 (b)	2	None	MINOR	ON	test dupl l c
3329 (c)	Any	None	MAJOR	ON	test dupl l c

† DUPINT alarms can be resolved only when the alarmed Duplication Interface circuit pack is in the active SPE carrier.

Notes:

a. This error indicates either a failure during a reset of the Duplication Interface circuit pack, or a report that either or both of the HFAIL and STDONE bits are in the wrong state. These errors cause a MINOR alarm that does not affect memory shadowing. The Aux Data indicates which error occurred.

Aux Data	Cause of Error
None	The active DUPINT Reset Test failed because the reset was unsuccessful.
1	The STDONE bit is in the wrong state.
2	The HFAIL bit is in the wrong state.
3	The STDONE and HFAIL bits are both in the wrong state.
51	The Active DUPINT Reset Test failed because the HFAIL bit stayed set after reset.
52	The Active DUPINT Reset Test failed because the state of health could not be restored after the reset.
55	The Active DUPINT Reset Test failed because shadowing could not be turned off after the board was successfully reset.

b. A local DUPINT FIFO overflow condition has been reported. If this alarm cannot be cleared by replacing the active Duplication Interface circuit pack, escalate the problem.

c. In-line errors have been reported from the DUPINT driver. If this alarm cannot be cleared by replacing the active Duplication Interface circuit pack, escalate the problem.

Aux Data	Cause of Error
23	DUPINT driver suicide
24	DUPINT driver loss of interrupt path
27	DUPINT driver no handshake path for processes
28	DUPINT driver no handshake path for drivers
29	DUPINT driver no control path
30	DUPINT driver main receive failed

System Technician-Demanded Tests: Descriptions and Error Codes

Always investigate tests in the order presented in the table below when inspecting errors in the system. By clearing error codes associated with the *Control Register Test* for example, you may also clear errors generated from other tests in the testing sequence.

Tests listed as *destructive* are so designated because they require shadowing to be turned off.

For testing to resolve DUPINT alarms, the alarmed circuit pack must be on the Active SPE carrier.

Order of Investigation	Short Test Sequence	Long Test Sequence	Reset Board Sequence	D/ND*
Active DUPINT HFAIL Check Test (#979)	X	X		ND
Active DUPINT Reset Test (#870)		X		D
Control Register Test (#865)		X		ND
Mailbox Loop-around Test (#866)		X		D
Local Loop-around Test (#867)		X		D
Memory Shadow Bounds Test (#868)		X		D

* D = Destructive; ND = Nondestructive

Control Register Test (#865)

This test checks the operation of the control register located on the Duplication Interface circuit pack.

Table 9-152. Test #865 Control Register Test

Error Code	Test Result	Description/ Recommendation
1418	ABORT	The HFAIL bit and/or the STDONE bit is in the wrong state. The active Duplication Interface circuit pack needs to be reset. 1. Run the **test duplication-interface long** command and follow instructions for the Active DUPINT Reset Test (#870). 2. If test #870 passes and this test still aborts with this abort code, escalate the problem.
2500	ABORT	Internal System Error 1. Retry the command at 1-minute intervals a maximum of 5 times. 2. If the test still aborts, escalate the problem.
	FAIL	The Control Register test bit was not set in the Status Register and the Type/Suffix/Vintage Register after this bit was written into the Control Register. 1. Replace Duplication Interface components starting with the active Duplication Interface circuit pack. Use SPE Duplication Channel Component Replacement procedures at the end of the DUP-CHL section.
	PASS	The Control Register test bit was set in the Status Register and the Type/Suffix/Vintage Register after this bit was written into the Control Register.

Mailbox Loop-around Test (#866)

This test is destructive.

This test checks the functionality of the mailbox mechanism provided by the Duplication Interface circuit pack

Table 9-153. TEST #866 Mailbox Loop-around Test

Error Code	Test Result	Description/ Recommendation
1405	ABORT	This test did not run because the Duplication Channel was busy. 1. Retry the command at 1-minute intervals a maximum of 5 times. 2. If the test still aborts, escalate the problem.
1418	ABORT	The HFAIL bit and/or the STDONE bit is in the wrong state. The active Duplication Interface circuit pack needs to be reset. 1. Run the **test duplication-interface long** command and follow instructions for the Active DUPINT Reset Test (#870). 2. If test #870 passes and this test still aborts with this abort code, escalate the problem.
2500	ABORT	Internal System Error 1. Retry the command at 1-minute intervals a maximum of 5 times. 2. If the test still aborts, escalate the problem.
	FAIL	The test message written into the active Duplication Interface circuit pack mailbox did not cause an interrupt to notify the software to retrieve it from the receive mailbox; or if retrieved, the looped back message did not match the message written into the mailbox. 1. Replace Duplication Interface components starting with the active Duplication Interface circuit pack. Use SPE Duplication Channel Component Replacement procedures at the end of the DUP-CHL section.

Continued on next page

Table 9-153. TEST #866 Mailbox Loop-around Test — *Continued*

Error Code	Test Result	Description/ Recommendation
55	FAIL	The attempt to turn off memory shadowing in this Duplication Interface circuit pack could not be verified in the Duplication Interface circuit pack hardware status register. 1. Replace Duplication Interface components starting with the active Duplication Interface circuit pack. Use SPE Duplication Channel Component Replacement procedures at the end of the DUP-CHL section.
	PASS	The test message written into the active Duplication Interface circuit pack mailbox successfully caused an interrupt to notify the software to retrieve it from the receive mailbox and the retrieved looped back message matched the message written into the mailbox.

Local Loop-around Test (#867)

This test is destructive.

This test checks the ability of the active Duplication Interface circuit pack to shadow writes that are within the shadowed address boundaries

Table 9-154. TEST #867 Local Loop-around Test

Error Code	Test Result	Description/ Recommendation
1321	ABORT	The faceplate switches on the Duplication Interface circuit packs are not set to **auto**. 1. If the switches are locked because you are using a replacement procedure, continue with this procedure to the step that directs you to unlock the active SPE by moving both switches to **auto**. The next step using the **test duplication-interface long clear** should not abort with this error code. 2. If the switches are locked and a replacement procedure is not being used, start with step 6 of the SPE Duplication Channel Component Replacement procedure for the standby Duplication Interface Circuit pack at the end of the DUP-CHL section to avoid an undesired interchange when unlocking the active SPE. 3. If this same abort is received with both switches in auto, Replace Duplication Interface components starting with the standby Duplication Interface circuit pack. Use SPE Duplication Channel Component Replacement procedures at the end of the DUP-CHL section. In addition to looking for failures, also check for the absence of this 1321 abort code when testing after the procedure directs setting the switches to **auto** after a component replacement.
1405	ABORT	This test did not run because the Duplication Channel was busy. 1. Retry the command at 1-minute intervals a maximum of 5 times. 2. If the test still aborts, escalate the problem.

Continued on next page

Table 9-154. TEST #867 Local Loop-around Test — *Continued*

Error Code	Test Result	Description/ Recommendation
1418	ABORT	The HFAIL bit and/or the STDONE bit is in the wrong state. The active Duplication Interface circuit pack needs to be reset. 1. Run the **test duplication-interface long** command and follow instructions for the Active DUPINT Reset Test (#870). 2. If test #870 passes and this test still aborts with this abort code, escalate the problem.
2500	ABORT	Internal System Error 1. Retry the command at 1-minute intervals a maximum of 5 times. 2. If the test still aborts, escalate the problem.
	FAIL	The retrieved test data word that was looped around in the active Duplication Interface circuit pack did not match the inversion of the written test data word. 1. Replace Duplication Interface components starting with the active Duplication Interface circuit pack. Use SPE Duplication Channel Component Replacement procedures at the end of the DUP-CHL section.
55	FAIL	The attempt to turn off memory shadowing in this Duplication Interface circuit pack could not be verified in the hardware status register. 1. Replace Duplication Interface components starting with the active Duplication Interface circuit pack. Use SPE Duplication Channel Component Replacement procedures at the end of the DUP-CHL section.
	PASS	The retrieved test data word that was looped around in the active Duplication Interface circuit pack matched the inversion of the written test data word.

Memory Shadowing Bounds Test (#868)

This test is destructive.

This test is used to check the memory shadowing bounds register located on the Duplication Interface circuit pack

Table 9-155. TEST #868 Memory Shadowing Bounds Test

Error Code	Test Result	Description/ Recommendation
1321	ABORT	The faceplate switches on the Duplication Interface circuit packs are not set to **auto**. 1. If the switches are locked because you are using a replacement procedure, continue with this procedure to the step that directs you to unlock the active SPE by moving both switches to **auto**. The next step using the **test duplication-interface long clear** should not abort with this error code. 2. If the switches are locked and a replacement procedure is not being used, start with step 6 of the SPE Duplication Channel Component Replacement procedure for the standby Duplication Interface Circuit pack at the end of the DUP-CHL section to avoid an undesired interchange when unlocking the active SPE. 3. If this same abort is received with both switches in auto, Replace Duplication Interface components starting with the standby Duplication Interface circuit pack. Use SPE Duplication Channel Component Replacement procedures at the end of the DUP-CHL section. In addition to looking for failures, also check for the absence of this 1321 abort code when testing after the procedure directs setting the switches to **auto** after a component replacement.
1405	ABORT	This test did not run because the Duplication Channel was busy. 1. Retry the command at 1-minute intervals a maximum of 5 times. 2. If the test still aborts, escalate the problem.

Continued on next page

Table 9-155. TEST #868 Memory Shadowing Bounds Test — *Continued*

Error Code	Test Result	Description/ Recommendation
1418	ABORT	The HFAIL bit and/or the STDONE bit is in the wrong state. The active Duplication Interface circuit pack needs to be reset. 1. Run the **test duplication-interface long** command and follow instructions for the Active DUPINT Reset Test (#870). 2. If test #870 passes and this test still aborts with this abort code, escalate the problem.
2500	ABORT	Internal System Error 1. Retry the command at 1-minute intervals a maximum of 5 times. 2. If the test still aborts, escalate the problem.
	FAIL	The looped around test word within the shadowing bounds did not match the inversion of the written test word or the looped around test word outside the shadowing bounds matched the inversion of the written test word. The test words are looped within the active Duplication Interface circuit pack. 1. Replace Duplication Interface components starting with the active Duplication Interface circuit pack. Use SPE Duplication Channel Component Replacement procedures at the end of the DUP-CHL section.

Continued on next page

Table 9-155. TEST #868 Memory Shadowing Bounds Test — *Continued*

Error Code	Test Result	Description/ Recommendation
55	FAIL	The attempt to turn off memory shadowing in this Duplication Interface circuit pack could not be verified in the hardware status register. 1. Replace Duplication Interface components starting with the active Duplication Interface circuit pack. Use SPE Duplication Channel Component Replacement procedures at the end of the DUP-CHL section.
	PASS	The looped around test word within the shadowing bounds matched the inversion of the written test word and the retrieved test word outside the shadowing bounds did not match the inversion of the written test word. The test words are looped within the active Duplication Interface circuit pack.

Active DUPINT Reset Test (#870)

This test is destructive.

This test checks the HFAIL bit in the active Duplication Interface circuit pack and attempts to reset the circuit pack if the HFAIL bit is set. The state-of-health of the standby SPE must be *partially functional* for this test to run.

Table 9-156. Test #870 Active DUPINT Reset Test

Error Code	Test Result	Description/ Recommendation
1419	ABORT	A standby state-of-health of *functional* or *not refreshed* prevented the test from running. 1. Manually lock the active SPE by moving the SPE-select switches located on the front of the DUPINT circuit pack to positions where they are both selecting the currently active SPE. 2. Rerun the test. 3. If the test passes, then unlock the active SPE by moving both SPE select switches to the Auto position and rerun the **test duplication-interface long** command. 4. If the test fails or aborts, replace the active DUPINT circuit pack. Use procedures described in *Replacing Duplication Channel Components* in the DUP-CHL section.
1321 2500	ABORT	Internal System Error 1. Retry the command at 1-minute intervals a maximum of 5 times. 2. If the test still aborts, escalate the problem.
	FAIL	The Active Duplication Interface circuit pack hardware did not initialize. 1. Replace Duplication Interface components starting with the active Duplication Interface circuit pack. Use SPE Duplication Channel Component Replacement procedures at the end of the DUP-CHL section. 2. If the test passes and this failure continues to occur later after replacing both circuit pack and cable, escalate the problem.

Continued on next page

Table 9-156. Test #870 Active DUPINT Reset Test — *Continued*

Error Code	Test Result	Description/ Recommendation
51	FAIL	After the active Duplication Interface circuit pack reset attempt, the HFAIL was still set. 1. Replace Duplication Interface components starting with the active Duplication Interface circuit pack. Use SPE Duplication Channel Component Replacement procedures at the end of the DUP-CHL section. 2. If the problem persists, follow normal escalation procedures.
52	FAIL	After the active Duplication Interface circuit pack was reset, an attempt to set the software state-of-health to its value that existed before running this reset test failed. 1. Replace Duplication Interface components starting with the active Duplication Interface circuit pack. Use SPE Duplication Channel Component Replacement procedures at the end of the DUP-CHL section. 2. If the problem persists, follow normal escalation procedures.
55	FAIL	The attempt to turn off memory shadowing in this Duplication Interface circuit pack could not be verified in the Duplication Interface hardware status register. 1. Replace Duplication Interface components starting with the active Duplication Interface circuit pack. Use SPE Duplication Channel Component Replacement procedures at the end of the DUP-CHL section.
	PASS	The Active Duplication Interface circuit pack HFAIL bit was not set, or the HFAIL bit was set and successfully cleared by this test.

Continued on next page

Active DUPINT HFAIL/STDONE Check Test (#979)

This test checks the HFAIL and STDONE bits on the active Duplication Interface circuit pack. This test is used only for periodic or scheduled testing

Table 9-157. Test #979 Active DUPINT HFAIL/STDONE Check Test

Error Code	Test Result	Description/ Recommendation
2500	ABORT	Internal System Error 1. Retry the command at 1-minute intervals a maximum of 5 times. 2. If the test still aborts, escalate the problem.
1	FAIL	The STDONE bit on the active Duplication Interface circuit pack is in the wrong state.
2	FAIL	The STDONE bit on the active Duplication Interface circuit pack is in the wrong state.
3	FAIL	The STDONE and HFAIL bits on the active Duplication Interface circuit pack are in the wrong state. 1. Run the **test duplication-interface long** command and follow instructions for the Active DUPINT Reset Test (#870).
	PASS	The STDONE and HFAIL bits on the active Duplication Interface circuit pack are in the correct state.

Maintenance Object Repair Procedures EMG-XFER to EXT-DEV ADMEN? Y

E

EMG-XFER (Emergency Transfer)

MO Name As It Appears in Alarm Log	Alarm Level	Initial System Technician Command to Run (a)	Full Name of MO
EMG-XFER	MAJOR	test environment UU	Emergency Transfer
EMG-XFER	WARNING	test environment UU	Emergency Transfer

a. UU is the universal cabinet number as listed in the PORT field of the Alarm or Error Log.

The Emergency Transfer maintenance object monitors the position of the Emergency Transfer switch(es) on the SYSAM circuit pack(s) in a PPN and the EPN Maintenance circuit packs in an EPN. It does not monitor whether or not the system is actually in Emergency Transfer.

Emergency Transfer (ET) provides the ability to connect designated analog phones to CO trunks when the switch cannot provide minimal phone service. Each cabinet (PPN and EPNs) has its own ET capability, and there is one EMG-XFER maintenance object for each cabinet or stack of single carrier cabinets.

ET is controlled either automatically by the system, or manually, depending on the setting of the ET switches as described below:

Emergency Transfer Switches: EPNs and Simplex SPE

In a simplex SPE PPN cabinet, or in an EPN cabinet, if the ET switch is in the ‘‘on’’ position, ET is manually invoked and the system has no control of ET. This will generate a major alarm. In a simplex SPE PPN cabinet or in an EPN cabinet, if the ET switch is in the ‘‘off’’ position, ET cannot be invoked even if the system requests it. This will generate a warning alarm. Unless a technician is currently working on the cabinet, the switches should be left in the auto position, giving control of ET to the system.

Emergency Transfer Switches: Duplicated SPEs

On a system with duplicated SPE, the switches on both SYSAMs must be in the manual ‘‘on’’ position to manually invoke ET, generating a major alarm. If the switch on either SYSAM is in the manual ‘‘off’’ position, ET cannot be invoked, generating a warning alarm. Other settings give control to the system.

Emergency Transfer Status

The **status cabinet** UU command shows the location of the ET switches and the current status of ET in the designated cabinet as follows:

on	ET is manually invoked.
off	ET is manually prevented.
auto+	ET is invoked and under system control.
auto-	ET is not in effect and is under system control, (normal operating state).
unavailable	The switch setting(s) is not available.

Hardware Error Log Entries and Test to Clear Values

Emergency Transfer Error Log Entries					
Error Type	**Aux Data**	**Associated Test**	**Alarm Level**	**On/Off Board**	**Test to Clear Value**
0*	0	Any	Any	Any	test environment UU
1	0	Emergency Transfer Query (#124)	MAJOR	ON	test environment UU r 3
257	0	Emergency Transfer Query (#124)	WARNING	ON	test environment UU r 3

* Run the Short Test Sequence first. If all tests pass, run the Long Test Sequence. Refer to the appropriate test description and follow the recommended procedures.

System Technician-Demanded Tests: Descriptions and Error Codes

Always investigate tests in the order presented in the table below when inspecting errors in the system. By clearing error codes associated with the *Battery & Battery Charger Query Test,* for example, you may also clear errors generated from other tests in the testing sequence.

Order of Investigation	ShortTest Sequence	LongTest Sequence	D/ND*
Battery & Battery Charger Query Test (#5) (a)	X	X	ND
AC Power Query Test (#78) (b)	X	X	ND
OLS Query Test (Carrier E) (#127) (c)	X	X	ND
OLS Query Test (Carrier D) (#127) (c)	X	X	ND
OLS Query Test (Carrier A) (#127) (c)	X	X	ND
OLS Query Test (Carrier B) (#127) (c)	X	X	ND
OLS Query Test (Carrier C) (#127) (c)	X	X	ND
Emergency Transfer Query Test (#124)	X	X	ND
Cabinet Sensors Query Test (#122) (d)	X	X	ND
External Alarm Lead Query Test (#120) (e)	X	X	ND
Analog Ring Generator Initialization Test			
Analog Ring Generator Initialization Test (#117) (f)	X	X	ND
Analog Ring Generator Query Test (#118) (f)	X	X	ND

* D = Destructive; ND = Nondestructive

a. Refer to POWER (Battery & Battery Charger) section for a description of this test.

b. Refer to AC-POWER (AC Power) section for a description of this test.

c. Refer to CARR-POW (Carrier Port Power Supply) section for a description of this test.

d. Refer to CABINET (Cabinet Sensors) section for a description of this test.

e. Refer to EXT-DEV (External Alarm Lead) section for a description of this test.

f. Refer to RING-GEN (Analog Ring Generator) section for a description of this test. These tests will only show up in the test sequence if there is a TN768 or TN780 Tone/Clock circuit pack in the port network being tested.

Order of Investigation	ShortTest Sequence	LongTest Sequence	D/ND*
SCC Power Query Test (#79) (a)	X	X	ND
Emergency Transfer Query Test (#124)	X	X	ND
External Alarm Lead Query Test (#120) (b)	X	X	ND
Analog Ring Generator Initialization Test (#117) (c)	X	X	ND
Analog Ring Generator Query Test (#118) (c)	X	X	ND

* D = Destructive; ND = Nondestructive

a. Refer to DC-POWER (Single Carrier Cabinet Power) section for a description of this test.

b. Refer to EXT-DEV (External Alarm Lead) section for a description of this test.

c. Refer to RING-GEN (Analog Ring Generator) section for a description of this test. These tests will only show up in the test sequence if there is a TN768 or TN780 Tone/Clock Board in the port network being tested.

Emergency Transfer Query Test (#124)

The Emergency Transfer Query Test queries the hardware for the state of the Emergency Transfer switch (or switches in a duplicated SPE system) and reports the result. If the position of the switch in a single SPE cabinet or EPN cabinet, or switches in a duplicated SPE cabinet, is such that the system software can control Emergency Transfer (auto), then the test passes. If the position of the switch or switches is such that the system software cannot control Emergency Transfer (manual ''on'' or manual ''off''), then the test fails. In the PPN the SYSAM controls Emergency Transfer, and in the EPN, the EPN Maintenance circuit pack controls Emergency Transfer

Table 9-158. TEST #124 Emergency Transfer Query Test

Error Code	Test Result	Description/ Recommendation
1000	ABORT	System resources required to run this test are not available. 1. Retry the command at 1 minute intervals a maximum of 5 times. 2. If the test continues to abort, escalate the problem.
2000	ABORT	Response to the test request was not received within the allowable time period. 1. Retry the command at 1 minute intervals a maximum of 5 time. 2. If the test continues to ABORT with error code 2000, check for system powering problems with the A carrier (PPN or EPN). Look for and resolve all AC-POWER and CARR-POW alarms in a multicarrier cabinet system or DC-POWER alarms in a single carrier cabinet system. Then, repeat the test. 3. If the test continues to ABORT with a 2000 error code, check for and resolve all SYSAM errors in a PPN, or MAINT (EPN Maintenance circuit pack) errors in an EPN. Then, repeat the test. 4. If the test continues to ABORT with a 2000 error code, then escalate the problem.
2029 2319 2320 2500	ABORT	Internal System Error 1. Retry the command at 1 minute intervals a maximum of 5 times. 2. If the test continues to abort, escalate the problem.

Continued on next page

Table 9-158. TEST #124 Emergency Transfer Query Test — *Continued*

Error Code	Test Result	Description/ Recommendation
17 18 20 33 65 289	FAIL	Emergency Transfer is manually turned OFF via the Emergency Transfer switch. 1. Place the switch (or switches in a PPN with duplicated SPE) in the AUTO position.
34 290	FAIL	Emergency Transfer is manually turned ON via the Emergency Transfer switch. 1. Place the switch (or switches in a PPN with duplicated SPE) in the AUTO position.
	PASS	System software has control of Emergency Transfer within this cabinet. If Emergency Transfer is currently invoked (the emergency transfer LED is on), the cause could be a major alarm. The following list shows the error types that can cause Emergency Transfer. If any of these errors appear in the log, then refer to the appropriate section and resolve those problems first. Maintenance Object TAPE SW-CTL SW-CTL TONE-BD TONE-BD Error Type 3585 1 2 1 2305 Aux Data 408 0 0 If none of the above errors appear in the log, then check the Emergency Transfer hardware. On an EPN, if Emergency Transfer is invoked while call processing is permitted, verify that the current limiter card (982LS) is in the correct slot on the backplane. If the current limiter card is not in the correct slot, move it to the correct location and rerun Test #124.

EPN-SNTY (EPN Sanity Audit)

MO Name As It Appears in Alarm Log	Alarm Level	Initial System Technician Command to Run	Full Name of MO
EPN-SNTY	None	None	EPN Sanity Audit

The EPN Sanity Audit feature enhances the system's ability to recover from failure conditions that disable an entire EPN. In such situations, not only is the affected EPN unable to provide service to the system, but the system itself has not detected the condition. The EPN Sanity Audit feature recognizes an EPN as unable to provide service when the software cannot receive control messages from EPN circuit packs. When such a failure is detected by the EPN Sanity Audit, a sequence of recovery actions is triggered to restore the EPN to service.

For a Standard Reliability system (simplex SPE), the recovery sequence is:

1. TDM Bus Switch
2. EPN WARM Reset
3. EPN COLD Reset

For a High or Critical Reliability system (duplicated SPE), the recovery sequence is:

1. TDM Bus Switch
2. Tone/Clock Switch within the EPN
3. PNC Interchange
4. EPN WARM Reset
5. EPN COLD Reset

The EPN Sanity Audit feature activates only when all existing maintenance operations have failed to detect the EPN problem. The EPN Sanity Audit serves as a safety net for the EPN.

NOTE:
It is not clear why certain types of EPN problems activate this feature. Thus, error log entries related to these problems do not specify which hardware to replace. The error log entries only indicate that some drastic recovery action occurred due to an unknown problem. However, clues as to the root cause of the EPN outage may be present in the Error Logs and the Alarm Logs of the following MOs: Switch Control (SW-CTL), TDM Bus (TDM-BUS), Expansion Interface (EXP-INTF), TDM Bus Clock (TDM-CLK), EXP-PN, and PNC-DUP. You should refer to these maintenance sections during trouble shooting operations.

Hardware Error Log Entries and Test to Clear Values

EPN-SNTY Error Log Entries					
Error Type	**Aux Data**	**Associated Test**	**Alarm Level**	**On/Off Board**	**Test to Clear Value**
0*	0	Any			None
8801 (a)	Any	None			
8803 (b)	Any	None			
9901 (c)	Any	None			
9902 (d)	Any	None			
9903 (e)	Any	None			
9904 (f)	Any	None			
9905 (g)	Any	None			

* Run the Short Test Sequence first. If all tests pass, run the Long Test Sequence. Refer to the appropriate test description and follow the recommended procedures.

Notes:

a. Error 8801 occurs whenever the EPN is unable to send up-link control messages and the control channel of the TDM Bus in the EPN has been switched as part of the recovery procedure.

b. Error 8803 occurs each time whenever the EPN is unable to send up-link control messages and the EPN Tone-Clock has been switched as part of the recovery procedure.

c. Error 9901 occurs whenever the EPN is unable to send up-link control messages, but recovers after the control channels of the TDM Bus in the EPN are switched.

d. Error 9902 occurs whenever the EPN is unable to send up-link control messages, but recovers after the active Tone-Clock in the EPN is switched.

e. Error 9903 occurs whenever the EPN is unable to send up-link control messages, but recovers after a PNC interchange has taken place.

f. Error 9904 occurs whenever the EPN is unable to send up-link control messages, but recovers after an EPN WARM reset.

g. Error 9905 occurs whenever the EPN is unable to send up-link control messages, but recovers after an EPN COLD reset.

ERR-LOG (Error Log)

MO Name As It Appears in Alarm Log	Alarm Level	Initial System Technician Command to Run	Full Name of MO
ERR-LOG	none	none	Error Log

The ERR-LOG maintenance object (MO) is responsible for the sanity of the Alarm Log, the Hardware Error Log, and the Software Error Log. If an inconsistency is detected in any one of these logs, all logs will be re-initialized and a hardware error will be logged against ERR-LOG indicating the time of inconsistency. There are no tests and no alarms for the Error Log MO. This MO exists solely for the purpose of allowing errors to be logged against it.

Hardware Error Log Entries

Error Log Error Log Entries					
Error Type	Aux Data	Associated Test	Alarm Level	On/Off Board	Test to Clear Value
510 (a)	Any	none	none	none	none

Notes:

a. This error indicates that an inconsistency was detected in either the Alarm Log, the Hardware Error Log, or the Software Error Log. The system will attempt to recover the logs but, depending on the extent of the corruption, some or all entries in the logs may be lost. Any alarms that were active at the time of this error have been cleared. There is no associated test for this error. If the error persists, escalate the problem.

   The Aux Data value indicates when the inconsistency was found:

0	During a periodic audit of the Error Log
1	After an extended reboot
2	After a reboot
4	After a Level-3 System Reset (COLD_1)
8	After a Level-2 System Reset (COLD_2)
16	After a Level-1 System Reset (Warm Start)
100	After an internal software audit
2500	After a single-process (MDM) restart

ETR-PT (Enhanced Tone Receiver Port)

MO Name As It Appears in Alarm Log	Alarm Level	Initial System Technician Command to Run (a)	Full Name of MO
ETR-PT(a)	MAJOR	test port PCSSpp sh	Enhanced Tone Receiver Port
ETR-PT	MINOR	test port PCSSpp sh	Enhanced Tone Receiver Port
ETR-PT	WARNING	test port PCSSpp sh	Enhanced Tone Receiver Port

a. UU is the universal cabinet number (1 for PPN, 2 - 44 for EPNs). C is the carrier designation (A, B, C, D, or E). SS is the number of the slot in which the circuit pack resides (01 to 21). pp is the two digit port number (01, 02, ...).

NOTE:
Replacing the tone/clock circuit pack requires a special procedure which is described in the documentation for TONE-BD. That section also describes the LED display for this board.

The TN2182 is a combined Tone Generator/Tone Detector board. It provides 8 Enhanced Tone receiver (ETR) ports. Each of these ports provides the functions previously found individually on DTMR-PTs, GPTD-PTs and CLAS-PTs ports. Thus each port on the TN2182 may be used for any tone detection function that was previously done by TN748, TN420 or TN744 Tone detection boards.

The TN2182 provides Mu-law or A-law tone detection capability.

Since the TN2182 also provides Tone/Clock function only one (or two if your system is duplicated) TN2182 circuit packs may be present in a port network. Thus if more tone detection resources are needed, the additional resources must be provided by TN748, TN420 or TN744 circuit packs.

Hardware Error Log Entries and Test to Clear Values

Enhanced Tone Receiver Port (ETR-PT) Error Log Entries					
Error Type	**Aux Data**	**Associated Test**	**Alarm Level**	**On/Off Board**	**Test to Clear Value**
1	any	Tone Detector Audit/Update Test (#43)	MAJOR/ MINOR(a)	ON	test port UUCSSpp r 2
18		busyout port	WARNING	OFF	release port UUCSSpp
257(b)	17666	Tone Detection Audit Update Test (#43	MAJOR/ MINOR(a)	ON	test port UUCSSpp r 3
513(c)	any	Tone Detection Verification Test (#42)	MAJOR/ MINOR(a)	ON	test port UUCSSpp r 3

Notes:

a. There are two possible alarm levels for this error type: major alarm and minor alarm. These alarm levels are dependent on the administered thresholds for TTR, CPTR and CCTR. Each ETR port is capable of operating an any of these.

   A major alarm is raised if the total number of ports capable of TTR, CPTR or CCTR detection currently in-service is less than or equal to 1/2 of the administered TTR, CPTR or CCTR threshold number.

   Otherwise, a minor alarm is raised. In either case, run the short test sequence against the port (ETR-PT) and follow the error code procedures for the individual tests.

   The threshold number of ports for service is administered using the **change system-parameters maintenance** command. For details, refer to Chapter 8, "Maintenance Commands".

b. The ETR-PT lost its translation. Testing the ETR-PT is sufficient to reload its translation. If testing the ETR port does not clear the error, then the circuit pack containing the defective ETR port should be replaced at a time when it is convenient to remove a clock board from the system. Follow the procedures described in the TONE-BD section for replacing a tone/clock circuit pack.

c. This error indicates the (ETR-PT) Enhanced Tone Receiver is having problems detecting touch tones, call progress or MFC tones. If this error type is persistently logged, then the circuit pack containing the defective ETR-PT should be replaced at a time it is convenient to remove a clock board from the board from the system. Follow the procedures described in the TONE-BD section for replacing a tone/clock circuit pack.

System Technician-Demanded Tests: Descriptions and Error Codes

Always investigate tests in the order presented in the following tables when inspecting errors in the system. By clearing error codes associated with the *Tone Detection Verification Test*, for example, you may also clear errors generated from other tests in the testing sequence.

Order of Investigation	Short Test Sequence	Long Test Sequence	D/ND*
Tone Detection Verification Test(#42)	X	X	ND
Tone Detection Audit/Update Test(#43)	X	X	ND

* D = Destructive; ND = Nondestructive

Tone Detection Verification Test (#42)

This test checks out a single ETR port in the touch-tone receiver mode MFC tone detection/generation mode and general purpose tone detection mode. During the first portion of the test, the touch-tone receiver mode is tested. Then general purpose call progress and maintenance tones are tested and lastly MFC tones are tested

Table 9-159. TEST #42 Tone Detection Verification Test

Error Code	Test Result	Description/ Recommendation
none	ABORT	The system was not able to allocate all the resources needed for this test OR there was an Internal System Error.
1	ABORT	The system could not allocate all the resources needed to test the tones.
1001	ABORT	The system was unable to put the ETR-PT in the appropriate mode to test it.
1002	ABORT	The system could not allocate time slots for the test connection. This situation could occur when the system is heavily loaded. If the system is not heavily loaded, then test the TDM-BUS via the **test tdm** command. Refer to TDM-BUS for details. 1. Retry the command at 1-minute intervals a maximum of 5 times. 2. If the test continues to abort, escalate the problem.
1003	ABORT	The system could not allocate a Tone-Clock for the test connection. This may be caused by a heavy load on the system or by a faulted Tone-Clock. 1. Check to see if there are any alarms against the Tone-Clock in the port network where the test aborted. If so refer to the recommended procedures for TONE-BD or TONE-PT. 2. If a new Tone-Clock has been inserted, allow about 1 minute for maintenance to run on the newly inserted circuit pack. 3. Retry the command at 1-minute intervals a maximum of 5 times. 4. If the test continues to abort, escalate the problem.

Continued on next page

Table 9-159. TEST #42 Tone Detection Verification Test — *Continued*

Error Code	Test Result	Description/ Recommendation
2000	ABORT	Circuit Pack's response to the test request was not received within the allowable time period. 1. Retry the command at 1-minute intervals a maximum of 5 times. 2. If the test continues to abort, escalate the problem.
2006	ABORT	This abort code indicates that the active Tone-Clock circuit pack or a Tone Detector circuit pack may not be functioning properly. On G3r V2 systems, this abort can also be caused by a mismatch between the companding mode administered for the system and that of the Tone Detector circuit pack. 1. [G3r V2] Make sure that the companding mode of the system matches that of the Tone Detector: mu-law for TN748; A-law for TN420. 2. Test the *active* Tone-Clock circuit pack in the port network with the **test tone-clock** UUC command and refer to the TONE-BD section for failures. 3. Retry the command at 1-minute intervals a maximum of five times. 4. If the test continues to abort, escalate the problem.
2100	ABORT	Could not allocate the necessary system resources to run this test. 1. Retry the command at 1-minute intervals a maximum of 5 times. 2. If the test continues to abort, escalate the problem.
1-122	FAIL	DTMF digits were not detected correctly. 1. Run the short test sequence via the **test port** UUCSSpp **sh r 1** command. 2. If the problem persists, the system is still operating properly but capacity will be reduced. To restore performance to normal, replace the circuit pack containing the defective ETR-PT (Enhanced Tone Receiver Port). Follow the procedures described in the TONE-BD section for replacing a tone/clock circuit pack.

Continued on next page

Table 9-159. TEST #42 Tone Detection Verification Test — *Continued*

Error Code	Test Result	Description/ Recommendation
102	FAIL	2225 Hz Modem Answer Tone was not detected correctly. This will impact call-classification operation. 1. Run the short test sequence via the **test port** UUCSSpp sh r 1 command. 2. If the problem persists, the system can still operate properly but capacity will be reduced. In order to restore performance to normal, replace the circuit pack containing the defective port. Follow the procedures described in the TONE-BD section for replacing a tone/clock circuit pack.
130	FAIL	Forward or Backward MFC signals were not correctly generated or detected. This will impact MFC calls. 1. Run the short test sequence via the **test port** UUCSSpp sh r 1 command. 2. If the problem persists, the system can still operate properly but capacity will be reduced. In order to restore performance to normal, replace the TN2182 circuit pack containing the defective ETR-PT. Follow the procedures described in the TONE-BD section for replacing a tone/clock circuit pack.
	PASS	Tone Detection Verification is successful. The ETR Port is able to detect/generate all necessary tones.

Tone Detector Audit/Update Test (#43)

A Digital Signal Processor sanity audit is performed on the ETR-PT.

Table 9-160. TEST #43 Tone Detector Audit/Update Test

Error Code	Test Result	Description/ Recommendation
none	ABORT	The system was not able to allocate all the resources needed for this test. 1. Wait 1 minute, and repeat the command a maximum of 5 times.
2000	ABORT	Response to the test request was not received within the allowable time period.
2100	ABORT	Could not allocate the necessary system resources to run this test. 1. Retry the command at 1-minute intervals a maximum of 5 times. 2. If the test continues to abort, escalate the problem.
	FAIL	Hardware audit failed. 1. Run the short test sequence via the **test port UUCSSpp sh r 1** command. 2. If the problem persists, the system is still operating properly but system capacity will be reduced. In order to restore system performance to normal, replace the circuit pack containing the defective ETR-PT. Follow the procedures described in the TONE-BD section for replacing a tone/clock circuit pack.
	PASS	The ETR Port has passed the sanity inquiry.

EXP-INTF (Expansion Interface Circuit Pack)

MO Name As It Appears in Alarm Log	Alarm Level	Initial System Technician Command to Run (a)	Full Name of MO
EXP-INTF	MAJOR	test board UUCSS s	Expansion Interface Circuit Pack
EXP-INTF	MINOR	test board UUCSS s	Expansion Interface Circuit Pack
EXP-INTF	WARNING	test board UUCSS s	Expansion Interface Circuit Pack

a. *UU* is the universal cabinet number (1 for PPN, 2 - 44 for EPNs). *C* is the carrier designation (A, B, C, D, or E). *SS* is the number of the slot in which the circuit pack resides (01 to 21).

Following this introductory description of the Expansion Interface (EI) circuit pack are sections on the following topics:

- EI In-Service Mechanism
- EI LED s
- EI and Tone-Clock Interactions
- How to Replace an EI Circuit Pack
- EI Manual Loopback Procedure

The TN570 (EI) Circuit Pack provides a TDM and Packet bus to fiber interface for the communication of signaling information, circuit switched connections and packet switch connections between endpoints residing in separate port networks. EI Circuit Packs are located in the Processor Port Network (PPN) or in Expansion Port Networks (EPN s) and are connected via optical fiber links. An EI can be connected to:

- Another EI (direct connect configuration)
- A DS1 Converter in a DS1C Complex used to remote an EPN
- A Switch Node Interface (center stage switch configuration)

In a Center Stage Switch configuration with duplicated Port Network Connectivity, the PPN Expansion Interface circuit pack may be located in the Switch Node Carrier (see Figure 9-35 on page E-23, “Center Stage Switch Configuration with Duplicated PNC”). In these cases, the Expansion Interface circuit pack and Switch Node Interface circuit pack may be connected via a metallic cable instead of an optical fiber link. In diagnosing problems with an Expansion Interface circuit pack that may be related to fiber link problems, the metallic cable should be treated in the same manner as the optical fiber in regards to testing and replacement.

A PPN-EPN connection can be extended via a DS1C Complex. (See Figure 9-36 on page E-24, “Fiber Link with DS1 Converter Complex”). When discussing problems that may be related to fiber link problems, the DS1C will be considered part of the fiber link. If diagnosis of the problem points to the fiber connectivity, and a DS1C circuit pack is part of this connectivity, problems with the DS1C circuit pack should be investigated (See DS1C-BD Maintenance documentation). The DS1C circuit pack enters into diagnostics for the Expansion Interface circuit pack via such tests as the Neighbor Query Test (#237), the Fiber Out-of-frame Test (#238), the Two-way Transmission Test (#241), and the Packet Transmission Test (#589).

In critical reliability systems, the fiber link connections are duplicated as part of Port Network Connectivity (PNC) duplication. In high reliability systems with a Center Stage Switch and simplex Port Network Connectivity, a single point of failure between the PPN and the Center Stage Switch is eliminated by duplicating PPN EIs, the SNI s to which they connect in the Center Stage Switch, and the fiber or metallic connections between them. These two connections normally share the call processing load. In the event of the failure of one of these connections, the load can be shifted to the operational link.

Figure 9-32 below shows the location of the EI circuit packs in a typical simplex PNC, direct connect configuration.

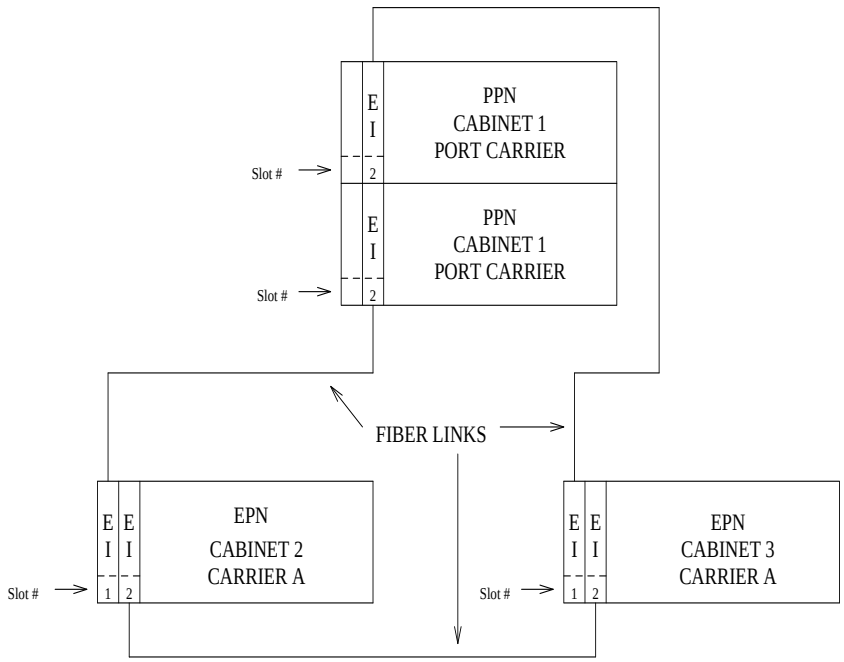

Figure 9-32. Direct Connect Configuration with Simplex PNC

Each Port Network in direct connect configurations must be connected to each other port network via a fiber link. Each EPN has one EI that functions as an archangel. This EI must be connected, via fiber, to an EI located in the PPN. If an EI is functioning as an archangel (bus master), its yellow led will be flashing at a rate of 2 seconds on and 200 ms off.

Figure 9-33 below shows the location of EI circuit packs in a typical duplicated PNC, direct connect configuration.

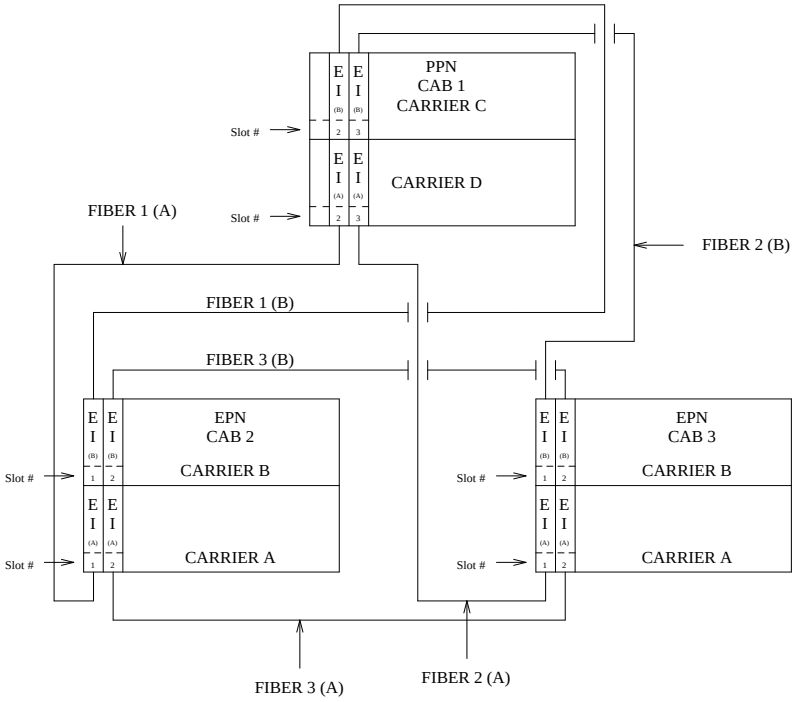

Figure 9-33. Direct Connect Configuration with Duplicated PNC

In a duplicated PNC there is an A-side PNC and a B-side PNC. All EIs in this diagram are labeled with an A or a B to designate which PNC they are a part of. Note that the PNC designation (A or B) does not relate directly to carrier location. Again, only one of the EIs in an EPN can function as an archangel (TDM Bus Master). The EI that is on the active PNC and that is connected to the PPN is the only one that can function in this mode. In normal operation, its yellow LED should be blinking at a rate of 2 seconds on and 200 ms. off.

Figure 9-34 below shows the location of EI s in a typical center stage switch configuration with simplex PNC.

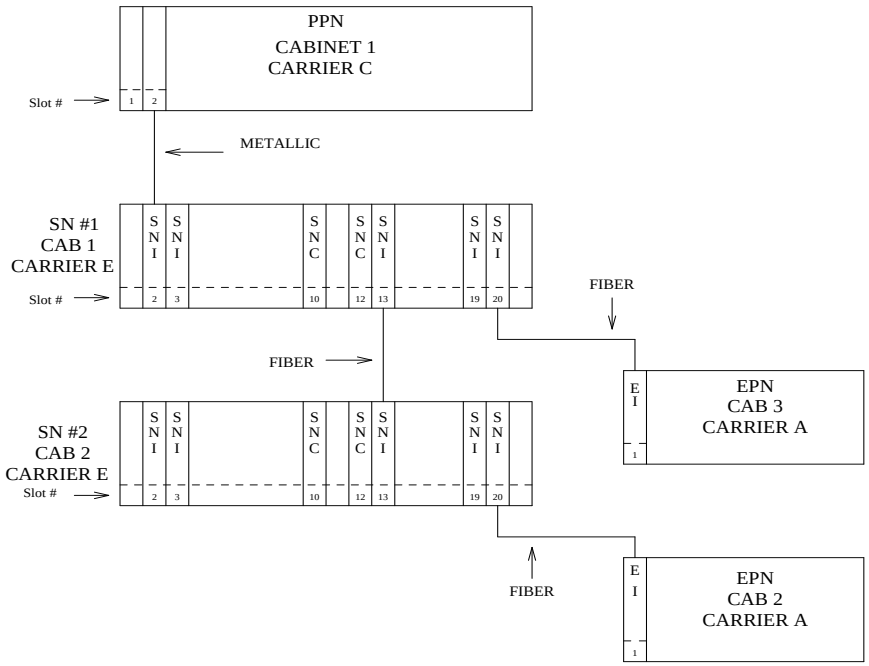

Figure 9-34. Center Stage Switch Configuration with Simplex PNC

In a simplex stage switch configuration, only one EI is needed in each port network. Notice that there is no direct connection between the EPNs, rather all inter-EPN connections are made through the stage switch. Each SNI in the switch node carriers can be connected to an EPN through an EI circuit pack.

Figure 9-35 below shows the location of EIs in a typical two Switch Node Center Stage Switch configuration with duplicated PNC.

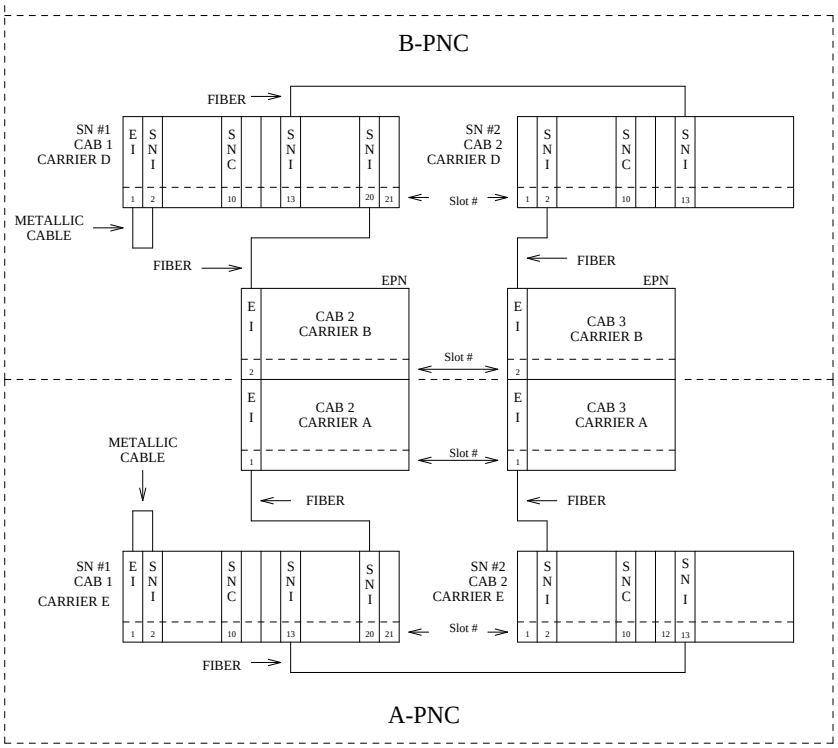

Figure 9-35. Center Stage Switch Configuration with Duplicated PNC

In a duplicated center stage switch configuration, two EIs are needed in each port network. One is located on the A-side PNC and the second one is located on the B-side PNC. Note that PNC designation (A or B) does not relate directly to carrier location. The EI that is on the active PNC will be the one that is acting as the archangel (TDM Bus Master) for the EPN. This is the EI that should have its yellow led blinking at a rate of 2 seconds on and 200 ms. off. The standby PNC EI should have its yellow led off. The PPN EI circuit packs are located in the first slot of the switch node carriers, although they may be located in port carriers.

An EPN (and thus, the EIs contained in that EPN) can be remoted via a DS1 converter complex. This requires that the associated fiber link which provides connectivity to the remoted EPN, be administered with a DS1 converter complex. The DS1 converter complex consists of two TN574 DS1 converter (DS1C) circuit packs connected by from 1 to 4 DS1 facilities. Figure 9-36 below shows where the DS1 converter complex fits into an EI to SNI, or EI to EI fiber link. For more information, refer to the DS1C circuit pack Maintenance documentation.

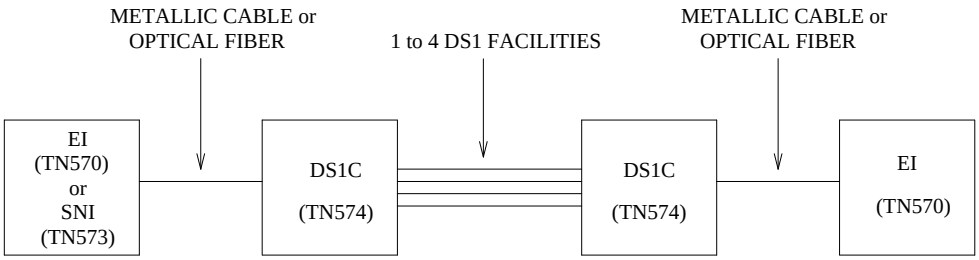

Figure 9-36. Fiber Link with DS1 Converter Complex

EI In-Service Mechanism

In order for phone calls to be routed through a given EPN, the EI that is part of the connectivity to that EPN, must be put into service. In order for an EI to be put into service, the following criteria must be met:

1. The EI must be recognized by software (inserted). Use the **list config carrier** command to determine if the board is recognized by software.

   command to determine if the board is recognized by software.

2. The EI must have a fiber link administered to it. Use the **list fiber-link** command to determine if this Expansion Interface circuit pack has a fiber administered to it.

   command to determine if this Expansion Interface circuit pack has a fiber administered to it.

3. The EI must have established a LAPD link to its neighbor (the circuit pack on the "other end" of the fiber link). This neighbor can be another EI or an SNI (Switch Node Interface).

   CAUTION:
   If requirements 1 and 2, above, have been met, and the yellow LED s are flashing in a manner that appears to confirm that the Expansion Interface circuit pack has established a LAPD link to its neighbor, the circuit pack still may not be "in-service". The requirement is that it must have the CORRECT neighbor on the other end of the fiber. Care must be taken when connecting the fibers to the back of the carriers so that fibers are connected to the correct circuit packs. In a Center Stage Switch configuration, run the "configuration audit" test against the Switch Node Interface circuit pack that is the neighbor of the Expansion Interface circuit pack in question (see SNI-BD Maintenance Documentation for more details).

Once an EI has been put into service, if any of the above listed "in-service" criteria becomes untrue, the EI will be taken out of service and service to that port network will not be available.

In a system that is configured with PNC duplication active, taking an EI out of service that is on the active PNC will, if all other things on the active and standby PNC are equal (i.e. both PNCs are equally healthy, the standby PNC is not busied out, the PNC is not locked by software), result in a PNC interchange.

Expansion Interface LEDs

The Expansion Interface circuit pack has the standard red, green, and yellow LEDs. The red and green LEDs have the traditional use, where red means some alarm condition and green indicates maintenance testing in progress. The yellow

LED is used to provide useful visual status information. The state of the yellow LED is very important when executing the Expansion Interface Manual Loop Back Procedure. The possible yellow LED states are shown in the following table.

Upon power-up, the red and green LEDs will come on and off. The yellow LED will go to its appropriate state.

To determine which PNC, and therefore, which EI(s) in a port network, is active and which is standby, the **status port-network** and

and **status PNC** commands can be used. Alternately, visual inspection will show that the active EI circuit packs will have their yellow LED on solid (for an inter-EPN EI in a direct connect system) or blink a pattern of 2 seconds on, and 200 ms off. The standby PNC EI circuit packs will have their yellow LED s off. See the following table for the possible EI yellow LED states.

commands can be used. Alternately, visual inspection will show that the active EI circuit packs will have their yellow LED on solid (for an inter-EPN EI in a direct connect system) or blink a pattern of 2 seconds on, and 200 ms off. The standby PNC EI circuit packs will have their yellow LEDs off. See the following table for the possible EI yellow LED states.

Expansion Interface Circuit Pack Yellow LED Flashing States

Condition	LED on	LED off
Fiber Out-of-Frame(a)	0.1 sec	0.1 sec
In frame-No Neighbor(b)	0.5 sec	0.5 sec
Expansion Interface Active(c)	2 sec	0.2 sec
Expansion Interface Active(d)	solid on	never off
Expansion Interface Standby(e)	never on	solid off

a. This flashing state corresponds to error codes 769 and 770 from the Hardware Error Log and indicates a failure of Test #238. These error codes will usually be accompanied by error code 1281 (no Expansion Interface or Switch Node Interface detected on opposite end of fiber). This condition may be caused by the absence of the neighbor Expansion Interface or Switch Node Interface circuit pack, a broken or missing fiber, or a missing lightwave transceiver on either endpoint (Expansion Interface or Switch Node Interface circuit pack).

b. This flashing state corresponds to error code 1281 from the Hardware Error Log and indicates a failure of Test #237. This condition is usually due to the failure of this Expansion Interface circuit pack or a failed Expansion Interface or Switch Node Interface circuit pack neighbor.

c. This is the normal state for an Active EPN Expansion Interface circuit pack that is also the bus master (Expansion Archangel) in the EPN.

d. This is the normal state for an Active Expansion Interface circuit pack that is not the bus master (Expansion Archangel) for an EPN. This applies only in the Direct Connect Configuration where the Expansion Interface circuit pack in an EPN is connected via a fiber link to an Expansion Interface circuit pack in the other EPN. This state also applies for an active Expansion Interface circuit pack located in the PPN.

e. This is the normal state for a Standby Expansion Interface circuit pack in both the PPN and EPNs.

NOTE:
In an EPN the TN775 EPN Maintenance (MAINT) circuit pack will monitor the sanity of the Expansion Interface circuit pack. If the Expansion Interface circuit pack should cycle between sane and insane several times, the Maintenance circuit pack will hold the Expansion Interface circuit pack reset. If a new Expansion Interface circuit pack is installed in the EPN, and the red LED remains lit, the EPN Maintenance circuit pack should be removed because it may be holding the new Expansion Interface circuit pack reset. This condition could present itself if there is a link problem to the EPN, and the EPN experiences several EPN restarts. The Maintenance circuit pack may be reinstalled after the Expansion Interface circuit pack has been physically inserted and the Expansion Interface circuit pack's red LED has gone off.

The link between two Active Expansion Interface circuit packs or between an Active Expansion Interface circuit pack and an Active Switch Node Interface circuit pack is involved in synchronization. The Expansion Interface circuit pack will report slip errors if synchronization is not operating properly. When diagnosing synchronization problems, the Expansion Interface circuit packs should be examined as a possible cause.

EI and Tone-Clock Interactions

The viability of the EI fiber link depends upon the system clock that is provided by the Active Tone-Clock circuit pack on each network (See TDM-CLK and TONE-BD in Chapter 9, "Maintenance Object Repair Procedures".) Each Expansion Interface circuit pack transmits over the fiber at a rate derived from the system clock on its network. If the Active Tone-Clock is defective in such a way that the frequency of system clock it produces is out of the specified range (''out of spec''), an Expansion Interface fiber link might go down. This affects an Expansion Archangel Link (EAL), a Remote Neighbor Link (RNL), and/or a Local Neighbor Link (LNL), even though the Expansion Interface circuit packs are healthy. When the PNC is duplicated, both fiber links could go down if there is a defective Active Tone-Clock. Whether or not a fiber link goes down, depends on certain characteristics of the Expansion Interface circuit packs. An Expansion Interface circuit pack should not be replaced if the fiber link on which it resides goes down because of a defective Active Tone-Clock circuit pack. The defective Tone-Clock circuit pack should be replaced instead. The Expansion Interface

circuit packs are more sensitive to a defective system clock than the rest of the components of the system. Therefore, testing of the Tone-Clock circuit pack might not reveal a problem.

The symptoms of the problem in which an invalid system clock causes an Expansion Link to go down are as follows:

- If the Tone-Clock in the PPN, or in an EPN that provides the current on-line synchronization reference (see **status synchronization**), is providing an invalid system clock:

  Any Expansion Interface or SNI circuit pack has a Fiber Out-of-Frame condition or a No Neighbor condition.

  An Expansion Interface circuit pack yellow LED will blink quickly when a Fiber Out-of-Frame condition exists (0.1 seconds on, 0.1 seconds off) and Test #238 will fail on the Expansion Interface circuit pack that is out-of-frame.

  An SNI circuit pack with a Fiber Out-of-Frame condition will blink its yellow LED quickly (0.1 seconds on, 0.1 seconds off) and Test #989 will fail on the SNI circuit pack that is out-of-frame.

  An Expansion Interface circuit pack yellow LED will blink slowly when a No Neighbor condition exists (0.5 seconds on, 0.5 seconds off) and Test #237 will fail on this Expansion Interface circuit pack, but Test #238 will pass.

  An SNI circuit pack with a no neighbor condition will blink its yellow LED slowly (0.5 seconds on, 0.5 seconds off) and Test #759 will fail on this SNI circuit pack, but Test #989 will pass.

- If a Tone-Clock in an EPN that does not provide the current on-line synchronization reference (see **status synchronization**) is providing an invalid system clock:

  In a direct connect configuration, the PPN Expansion Interface circuit pack yellow LED will blink quickly (Fiber Out-of-Frame condition - 0.1 seconds on, 0.1 seconds off).

  Test #238 will fail on this Expansion Interface circuit pack.

  In a CSS configuration, the SNI connected to the EPN Expansion Interface circuit pack will blink its yellow LED quickly (Fiber Out-of-Frame condition - 0.1 seconds on, 0.1 seconds off).

  The EPN Expansion Interface circuit pack yellow LED will blink slowly (In-frame, No Neighbor condition - 0.5 seconds on, 0.5 seconds off).

  If the EPN is in-service, Test #237 will fail on this Expansion Interface circuit pack, but Test #238 will pass.

These symptoms can also be the result of other problems (for example, one half of the fiber being unable to transmit data). If the system exhibits these symptoms, execute the following procedure:

1. Verify that the EPN stays down for at least 1 minute.

   If the EAL comes back in service after a short time, without switching the Active Tone-Clock, the problem was probably that the on-line synchronization source became invalid (See SYNC Maintenance documentation for more information).

   However, if the EAL (s) have not come back into service after a minute, the synchronization source is not the cause of the problem. Proceed to Step 2.

2. Check for errors via the **display errors** command with the Category field set to ‘‘tone’’ and the Active alarms field set to ‘‘n.’’ Some of the alarms on EPN objects might have been resolved if the EPN went down. Refer to the appropriate MO Maintenance documentation for descriptions of any of the errors occurring at about the same time as the EXP-PN errors, SYS-LINK errors against EAL s, RNLs, or LNLs, or FIBER-LK (769, 1025, or 1281) errors. Resolve any active alarms. Also, if Error Type 18 was logged against the SYNC MO when the EPN went down, the problem was probably that the synchronization on-line reference became invalid. Since reference switching was disabled, the Tone-Clock did not switch from the invalid reference. Therefore, the Tone-Clock circuit pack put out a system clock that was ‘‘out of spec.’’ Issue the **enable synchronization-switch** command. If the EPN is down, reseat the Tone-Clock circuit packs on the EPN. This action should restore the EPN to service.

   Execute Steps 3 and 4 in the order most convenient to you and least destructive to the customer.

3. Check to see if the fiber optic cable is transmitting properly via the following procedure on one of the out-of-service links, or use the "Fiber Fault Isolation Procedure" in Chapter 5, "Responding to Alarms and Errors".

   a. Carefully record the symptoms (yellow LED pattern and test failing) that were occurring on the PPN Expansion Interface circuit pack and the EPN Expansion Interface circuit pack or the connected Switch Node Interface circuit pack in the case of a Center Stage system. Clearly indicate which symptoms are occurring on which Expansion Interface/Switch Node Interface circuit pack.

      ⚠ **CAUTION:**
      Before proceeding, note which is the current transmit fiber and which is the current receive fiber for proper reconnection.

   b. Disconnect the transmit and receive fiber pair from the lightwave transceiver on the back of one of the Expansion Interface circuit pack slots that is exhibiting symptoms.

   c. Connect what was formerly the transmit fiber to the receive jack.

   d. Connect what was formerly the receive fiber to the transmit jack.

e. Perform Steps b, c, and d on the opposite end of the fiber and the lightwave transceiver on the back of the connected Expansion Interface or Switch Node Interface circuit pack slot.

f. If the symptoms which were formerly occurring on the Expansion Interface circuit pack that was exhibiting these symptoms are now occurring on the connected Expansion Interface or Switch Node Interface circuit pack and vice versa, the fiber is defective and should be replaced.

4. Determine if the problem is due to a defective Active Tone-Clock circuit pack. Refer to the preceding list of symptoms to decide which network contains the suspect Active Tone-Clock.

CAUTION:
If you remove the EPN Expansion Interface circuit pack that is active or that was active when the EPN was last in-service, the Tone-Clock lead will revert to the default value which will cause the Tone-Clock circuit pack located in the A carrier to become the Active Tone-Clock. This characteristic can be deceiving. Replacing or reseating the Active EPN Expansion Interface circuit pack might restore the link(s) temporarily. However, if the Tone-Clock circuit pack located in the B carrier was really the source of the problem and not the Expansion Interface circuit pack, then the link(s) will go down again the next time a Tone-Clock switch to the Tone-Clock in the B carrier is attempted (probably when the scheduled Tone-Clock switch occurs).

CAUTION:
If, after all the links are restored, you suspect the problem might have been due to a defective Tone-Clock circuit pack, switch to this Tone-Clock at an appropriate time. If the Tone-Clock circuit pack was the cause of the problem and the same Expansion Interface circuit packs are in place, the same link(s) will go down again.

a. On a system in which the network containing the suspect Tone-Clock circuit pack has duplicated Tone-Clock circuit packs and the network is in-service:

   Switch to the Standby Tone-Clock on this network. If the suspect Tone-Clock circuit pack is defective, link(s) should be restored at this point. Switching back to the defective Tone-Clock should make the same link(s) go out-of-service. Such a Tone-Clock is defective and should be replaced as soon as possible. If switching Tone-Clocks does not bring up the EPN, then this Tone-Clock is not the source of the problem. Make sure to switch back to the original Tone-Clock.

CAUTION:
If the defective Tone-Clock circuit pack is left as the Standby Tone-Clock, then a scheduled Tone-Clock switch will cause the same link(s) go out-of-service again.

b. On a system in which the EPN containing the suspect Tone-Clock circuit pack is out-of-service:

   Replace the Active Tone-Clock circuit pack on this network. In a network with duplicated Tone-Clock circuit packs, the Active Tone-Clock will be the Tone-Clock circuit pack whose yellow LED is flashing: if both are flashing, it is the one that is blinking slower. If the link(s) comes up after replacing this Tone-Clock circuit pack, then this Tone-Clock circuit pack should be replaced as soon as possible.

   CAUTION:
   If the defective Tone-Clock circuit pack is left as the Standby Tone-Clock, then a scheduled Tone-Clock switch will cause the same EPN to go out-of-service again.

   If replacing the Active Tone-Clock did not bring up the link(s), then this Tone-Clock circuit pack is not the source of the problem.

c. On a Standard Reliability system in which the PPN contains the suspect Tone-Clock circuit pack:

   Replace the PPN Tone-Clock circuit pack at a time when bringing down the system is most convenient to the customer.

   CAUTION:
   Replacing the PPN Tone-Clock circuit pack will stop call processing on that network and also bring down stable calls. This action will eventually cause a Reset System 2 (Cold_2 restart).

   If replacing the Tone-Clock circuit pack restores the link(s), then the Tone-Clock circuit pack is defective and should be replaced. Otherwise, the problem is not with the PPN Tone-Clock circuit pack.

Replacing an EI Circuit Pack—Simplex PNC

WARNING:
Do not power down a Switch Node carrier to replace a circuit pack.

WARNING:
Replacing a Switch Node Interface, Switch Node Clock, Expansion Interface or DS1 Converter circuit pack on a simplex system disrupts service. The service effect can range from outage of a single EPN to outage of the entire system.

1.	Enter **busyout board** UUCSS	UUCSS represents the cabinet-carrier-slot address of the circuit pack to be replaced.
2.	Replace the circuit pack	
3.	Wait for the circuit pack to reset	Red and green LED s will light and then go out.
4.	Enter **release board** UUCSS	**CAUTION:** *Do not busyout any Expansion Interface circuit pack after this point.*
5.	Enter **test alarms long clear** for category **exp-intf**	
6.	Wait 5 minutes for SNI-BD, FIBER-LK AND DS1C-BD alarms to clear, or enter **clear firmware counters a-pnc**	

If the red LED remains lit, see the Note under *EI LEDs* above.

Replacing an EI Circuit Pack—Duplicated PNC

WARNING:
On a system with duplicated PNC, synchronization may be provided over a combination of active and standby components. This condition is indicated by an OFF-BOARD WARNING alarm against TDM-CLK with error type 2305. Repairs to standby PNC in this state may disrupt service. Otherwise, if the active PNC is functional, replacement of a standby component will not disrupt service.

1.	Enter **status pnc**	Verify that the component to be replaced is on the standby PNC.
2.	Enter **busyout pnc**	
3.	Enter **busyout board** UUCSS	UUCSS represents the cabinet-carrier-slot address of the circuit pack to be replaced.
4.	Replace the circuit pack	
5.	Enter **release board** UUCSS	**CAUTION:** *Do not busyout any Expansion Interface circuit pack after this point.*
6.	Enter **test alarms long clear** for category **exp-intf**	
7.	Wait 5 minutes for SNI-BD, SNI-PEER, FIBER-LK, and DS1C alarms to clear, or enter **clear firmware counters <a-pnc or b-pnc>**	Use the letter designation of the pnc which holds the replaced component (the standby pnc).
8.	Enter status pnc	If either PNC state-of-health is not "functional", consult the PNC-DUP section of Chapter 9, "Maintenance Object Repair Procedures".
9.	Enter **release pnc**	

If the red LED remains lit, see the Note under *EI LEDs* above.

Expansion Interface Manual Loop Back Procedure

This procedure is to be used when an Expansion Interface circuit pack cannot be tested by software. This is usually when the Expansion Interface circuit pack is in the EPN and the EPN is down. When the connection to the Expansion Interface circuit pack is via fiber, a short length of optical fiber is required for this procedure. If a metallic cable is used in the connection, the metallic connector must be removed from the back of the carrier, and a lightwave transceiver connected in its place. The short length of optical fiber can then be used.

If this procedure is run on both endpoints of a fiber link (Expansion Interface circuit packs or Switch Node Interface circuit packs), and both check out fine, then the failure is most likely in the fiber itself, assuming neither endpoint circuit pack is busied out and the link remains inactive.

1. Busyout the circuit pack (Expansion Interface or Switch Node Interface) using the **busyout board UUCSS** command.

   command.

2. Disconnect the transmit and receive fiber pair from the lightwave transceiver on the back of the circuit pack (Expansion Interface or Switch Node Interface) slot. *Note which is the transmit fiber and which is the receive fiber for proper re-connection at the end of this procedure. The fiber connected to the transmit side of the lightwave transceiver on one Expansion Interface circuit pack should be connected to the receive side of the lightwave transceiver on the circuit pack on the opposite end of the fiber.*

3. Using a fiber jumper cable, interconnect the transmit and receive jacks of the lightwave transceiver as shown in Figure 9-37 on page E-36.

   NOTE:
   Make sure that the total length of the fiber jumper cable does not exceed the maximum length recommended for the fiber link connections between cabinets. Using cable lengths not within connectivity guidelines can adversely affect test results.

4. Go to the front of the cabinet and inspect the yellow LED.

   - If the yellow LED flashes on at a rate of once per second, the (Expansion Interface or Switch Node Interface) circuit pack or transceiver should be replaced.
   - If the yellow LED flashes on at a rate of five times per second, the circuit pack (Expansion Interface or Switch Node Interface) or the lightwave transceiver may need replacement. This condition may also be due to a faulty system clock on the network containing this Expansion Interface circuit pack.
   - If the yellow LED is not blinking, this circuit pack (Expansion Interface or Switch Node Interface), and the lightwave transceiver are functioning properly.

5. Replace faulty components and reconnect the original fiber. Be sure to reconnect the fibers properly as noted in Step 3. If there is a problem with the port network after re-connecting the fiber, and the port network is connected to a Center Stage Switch, run the Configuration Audit via the **test board** command on the Switch Node Interface circuit pack to which the intervening fiber is connected. See the SNI-BD section for instructions on interpreting results.

   command on the Switch Node Interface circuit pack to which the intervening fiber is connected. See the SNI-BD section for instructions on interpreting results.

6. Release Expansion Interface circuit pack or Switch Node Interface circuit pack with the **release board UUCSS** command.

   command.

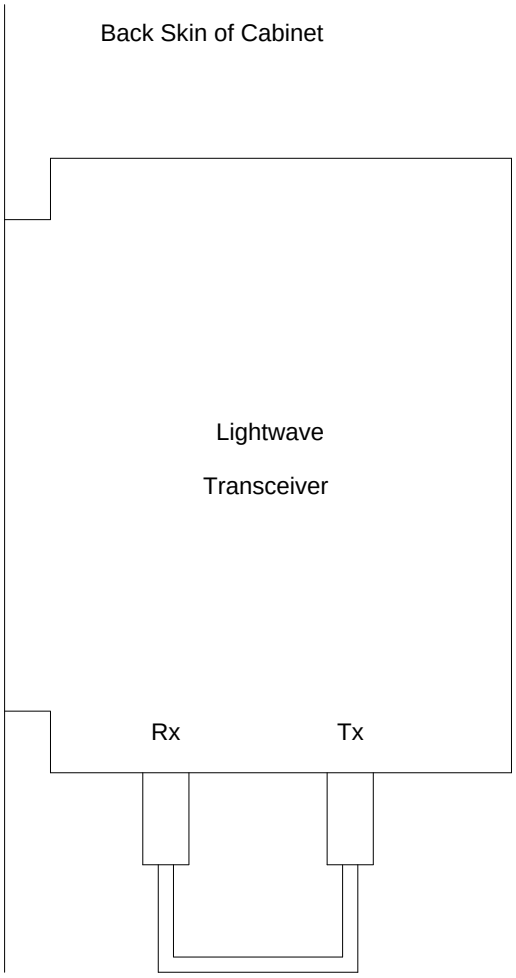

Figure 9-37. Interconnection of Lightwave Transceiver Transmit/Receive Jacks

Hardware Error Log Entries and Test to Clear Values

Table 9-161. EXP-INTF Error Log Entries

Error Type	Aux Data†	Associated Test	Alarm Level	On/Off Board	Test to Clear Value
0*	0	Any	Any	Any	test board UUCSS
1	Any	Expansion Interface Local TDM Loop Around Test (#240)	MAJ	ON	test board UUCSS r 2
2		Expansion Interface Local TDM Loop Around Test (#240)	MAJ	ON	test board UUCSS r 2
18(a)	0	busyout board UUCSS	WRN	OFF	release board UUCSS
23(b)	0	None	WRN	OFF	
125(c)		None	MIN	ON	
131(d)		None	MIN	ON	
257(e)	Any	None	MIN	OFF	
513(f)	5-7	None	MAJ	ON	
769(g)	113	Expansion Interface FOOF Query Test (#238)	WRN	OFF	test board UUCSS r 1
770		Expansion Interface FOOF Query Test (#238)	WRN	OFF	test board UUCSS r 1
1025	Any	Expansion Interface Control Channel Test (#316)	MAJ	ON	test board UUCSS r 1
1281(h)		Expansion Interface Neighbor Query Test (#237)	MIN	OFF	test board UUCSS r 1
1537		Expansion Interface 2-way Transmission Test (#241)	MAJ	OFF	test board UUCSS r 4
1538(i)		None	MIN	ON	
1793		Expansion Interface Lightwave Transceiver Loop Around Test (#242)	MAJ	ON	test board UUCSS l r 3
2305(j)	118	None	WRN	OFF	
2306(j)	3	None	WRN	OFF	

Continued on next page

Table 9-161. EXP-INTF Error Log Entries — *Continued*

Error Type	Aux Data†	Associated Test	Alarm Level	On/Off Board	Test to Clear Value
	112				
2561(k)	Any	None	MIN	ON	
2817(l)	Any	None	MIN	ON	
3073(m)	Any	Expansion Interface Packet Interface Test(#589)	MAJ	OFF	test board UUCSS r 3
3074(n)	2	Expansion Interface Packet Interface Test(#589)	MAJ	OFF	test board UUCSS r 3
3075(n)	1	Expansion Interface Packet Interface Test(#589)	MAJ	OFF	test board UUCSS r 3
3076		Expansion Interface Packet Interface Test(#589)	MAJ	OFF	test board UUCSS r 3
3330(o)	Any	None	WRN	ON	
3585(p)	0	None	WRN	OFF	
3841(q)	Any	None	MIN	OFF	(s)
3842(r)	Any	None	MIN	OFF	(s)
10001(t)	0	None			

* Run the Short Test Sequence first. If all tests pass, run the Long Test Sequence. Refer to the appropriate test description and follow the recommended procedures.

† Aux Data 32767 for any error log entry indicates that an alarmed EI was busied out and then released. When this occurs, existing service affecting alarms must be preserved. As is typical, when the EI is released all alarms are resolved. Therefore the alarm and error logs must be repopulated with the alarms present at time of busy out. This error code is an indication that existing aux data and error log time stamps are no longer valid because they were lost when the alarms were resolved upon release of the circuit pack.

Notes:

a. This error indicates that the Expansion Interface circuit pack has been busied out via the **busyout board UCSS** command. To resolve this error, release the Expansion Interface circuit pack via the **release board UCSS** command.

b. Expansion Interface circuit pack has been administered on the Circuit Pack form, but has not been physically inserted into the system. Insert the circuit pack.

c. A wrong circuit pack is located in the slot where this circuit pack is logically administered. To resolve this problem, either remove the wrong circuit pack and insert the logically administered circuit pack OR use the **change circuit-pack** command to readminister this slot to match the circuit pack that is physically inserted in this slot (if a fiber is administered to this circuit pack the fiber must be removed via administration before the circuit pack can be removed from administration).

d. This alarm is raised after an Expansion Interface circuit pack has been removed from a slot for 5 minutes. The alarm will be resolved when the Expansion Interface circuit pack is physically inserted into this slot and becomes recognized by software.

   Another way to resolve or prevent this alarm is to use the **change circuit pack** command to remove the Expansion Interface circuit pack administrative entry for this slot after the Expansion Interface circuit pack has been removed from the slot.

   It is also possible that the EI could be held in reset by the EPN Maintenance Board (MAINT) and is not inserted in the system. Try issuing the **test maint P long** command on the maintenance board in the same port network.

e. Error Type 257 indicates that this Expansion Interface circuit pack is detecting incorrect data on the incoming fiber bit stream. The data is originating at the connected circuit pack (DS1C circuit pack, Expansion Interface circuit pack, or Switch Node Interface circuit pack).

   1. Enter **display errors** and save a copy of the error log for use in later steps. Intervening repair procedures are likely to alter the contents of the error log and this information may be needed in later steps.

   2. Perform the "Fiber Fault Isolation Procedure" described in Chapter 5, "Responding to Alarms and Errors".

   3. If errors are still present or if this error occurs intermittently, replace the Expansion Interface circuit packs, Switch Node Interface circuit packs, DS1C circuit packs, or the transceivers on this link.

   4. These errors could result from a bad timing reference on the network or switch node which contains the DS1C circuit pack, the Expansion Interface circuit pack or Switch Node Interface circuit pack on the opposite end of the fiber. Refer to the error log that was

saved in step 1 and follow the associated repair procedure for EXP-INTF error 2305 to resolve this error. If there are any TONE-BD, TDM-CLK, or SYNC errors, resolve these errors as well.

5. If you continue to see this problem, follow normal escalation procedures.

f. Error Type 513 with Aux Data 5-7 indicates an ON BOARD hardware failure of the circuit packs RAM or ROM.

   1. Replace the Expansion Interface circuit pack.
   2. If you continue to see this problem, follow normal escalation procedures.

g. Besides running the test sequence and following procedures outlined for test #238, perform the "Fiber Fault Isolation Procedure" described in Chapter 5, "Responding to Alarms and Errors".

h. Error type 1281 means that the link to the neighbor circuit pack is broken or that the fibers have been connected incorrectly. Enter **test board UUCSS** and follow repair procedures for the tests.

i. Error Type 1538 indicates a hyperactive Expansion Interface circuit pack that is generating an abnormal amount of control messages to the Processor. When this error was generated, the Expansion Interface was automatically reset by the system. If this system does not have duplicated Port Network Connectivity, service to the EPN will have been disrupted. If this system does have duplicated Port Network Connectivity, the system should have switched to the Standby Port Network Connectivity.

   1. Enter the **reset board UUCSS** command for this Expansion Interface circuit pack.
   2. If error 1538 is detected again, replace the Expansion Interface circuit pack.
   3. If you continue to see this problem, follow normal escalation procedures.

j. Error Type 2305 with aux data 118 indicates that the Expansion Interface circuit pack has detected slips on the incoming fiber data stream. That is, an EPN and the PPN in a Direct Connect configuration, or a Port Network and a Switch Node in a Center Stage Switch configuration, are not synchronized.

1. Enter **display errors** and follow the repair procedures for *non-slip* errors against any SYNC (see ‘‘Approach to Troubleshooting’’ in SYNC section), TDM-CLK, TONE-BD, DS1C-BD, EXP-INTF, SNC-BD, and SNI-BD. Non-slip errors are those *not* listed below:

Table 9-162. Error Log Entries for Slip Errors

Circuit Pack Name	Error Log Name	Error Log Entry for Slips
DS1 Interface	DS1-BD	3073 to 3160
Expansion Interface	EXP-INTF	2305
Switch Node Interface	SNI-BD	1537
Tone-Clock	TDM-CLK	1025
UDS1 Interface	UDS1-BD	3073 to 3160
DS1C Circuit Pack	DS1C-BD	3329

2. For slip errors, refer to the SYNC section.
3. If this problem persists, follow normal escalation procedures.

Error type 2306 indicates on-board failures related to system timing and synchronization. Perform the "Fiber Fault Isolation Procedure" described in Chapter 5, "Responding to Alarms and Errors".

k. Error Type 2561 indicates an on-board failure of Expansion Interface circuitry related to handling packet data from the fiber interface and from the Packet bus interface.

1. If this error has generated a minor alarm, the Expansion Interface circuit pack should be replaced.
2. If you continue to see this problem, follow normal escalation procedures.

l. Error type 2817 indicates an on-board failure of Expansion Interface circuitry related to transmission of data to the fiber interface.

1. If this error has generated a minor alarm, the Expansion Interface circuit pack or transceiver should be replaced.
2. If you continue to see this problem, follow normal escalation procedures.

m. Perform the following steps for error type 3073:

1. Execute the **display errors** command and resolve any errors on the following: PKT-BUS, PKTINT, PDATA-BD, PGATE-BD, BRI-BD, BRI-PT, BRI-SET/ASAI, UDS1-BD.

2. Enter the **test board UUCSS r3** command for this circuit pack. If this error continues to appear, replace the EI circuit pack.

n. Error types 3074 and 3075 indicate failures of the Expansion Interface Circuit Pack Packet Path Test. This packet path test exercises circuitry on the Expansion Interface circuit pack, the neighbor Expansion Interface or Switch Node Interface circuit pack, and any intervening DS1C circuit packs (if the EPN is remoted).

   1. Certain packet bus faults can cause these errors without the EI being defective. Check to see of PKT-BUS errors are also present. If they are, use the PKT-BUS section of this chapter and "Packet Bus Fault Isolation and Repair" in Chapter 5, "Responding to Alarms and Errors", to diagnose the problem.
   2. If error type 3075 is present without error type 3074, replace the Expansion Interface circuit pack.
   3. If error type 3074 exists with or without 3075, run **test board UUCSS** on the EI and follow the repair procedures for any test that does not pass.
   4. If PKT-BUS errors are not present, and replacing the Expansion Interface does not resolve the problem, there is still the possibility of a packet bus fault. See "Packet Bus Fault Isolation and Repair" in Chapter 5, "Responding to Alarms and Errors".

o. Error type 3330 indicates a failure of a diagnostic component on the Expansion Interface circuit pack. The failed component will not impair service, but it may leave the Expansion Interface circuit pack in a state where the Expansion Interface circuit pack cannot detect errors.

   1. Replace the Expansion Interface circuit pack at a time when it is most convenient for the customer (this may cause service outages).
   2. If you continue to see this problem, follow normal escalation procedures.

p. Error type 3585 indicates that the Expansion Interface circuit pack experienced a series of very short out of frame conditions within several minutes. This may indicate transmission difficulties over the fiber link. If this condition ceases, the warning alarm should be resolved within 15 minutes.

   1. Enter **display errors** and follow the associated repair procedures for any SNC-BD, TDM-BUS, TDM-CLK or SYNC errors.
   2. Perform the "Fiber Fault Isolation Procedure" described in Chapter 5, "Responding to Alarms and Errors".
   3. If the alarm is not resolved within the next 15 minutes, replace the lightwave transceiver on the Expansion Interface circuit pack reporting the problem and on the connected Expansion Interface circuit pack, Switch Node Interface circuit pack, or DS1C circuit pack.

4. If the alarm is not resolved within the next 15 minutes, replace the Expansion Interface circuit pack reporting the alarm.
5. If the alarm is not resolved within the next 15 minutes, replace the connected Expansion Interface circuit pack, Switch Node Interface circuit pack or DS1C circuit pack.

q. Error Type 3841 indicates the EI has reported a loss of lock with the backplane system clock.

r. Error Type 3842 indicates that the test that queries the EI for the state of the lock to the system clock has failed. This means that a loss of lock condition is present.

s. The counter associated with Error Types 3841 and 3842 is cleared when the query for the state of the clock-to-system-clock passes. Once the alarm is raised, this test is run every five minutes. However, the test is not part of any sequence that can be run on demand. See Note "p" above for repair procedure.

t. Error type 10001 is a report that the Expansion Interface circuit pack dropped one control message to the EPN. This condition may have been observed as a call that did not complete correctly. No system technician action is required.

System Technician-Demanded Tests: Descriptions and Error Codes

Always investigate tests in the order presented in the table below when inspecting errors in the system. By clearing error codes associated with the *Expansion Interface Reset Test,* for example, you may also clear errors generated from other tests in the testing sequence.

Order of Investigation	Short Test Sequence	Long Test Sequence	Reset Board Sequence	D/ND*
Expansion Interface Reset Test(#336)			X	D
Expansion Interface Fiber Out-of-Frame	X	X		ND
Query Test (#238)				
Expansion Interface Fiber Optic				
Interface Loop Around Test(#242)		X		D
Expansion Interface Control Channel Test(#316)	X	X		ND
Expansion Interface Neighbor Query Test (#237)	X	X		ND
Expansion Interface Local	X	X		ND
Loop Around Test (#240)				
Expansion Interface 2-way	X	X		ND
Transmission Test (#241)				
Expansion Interface Packet Interface Test (#589)	X	X		ND

* D = Destructive; ND = Nondestructive

When testing Expansion Interface circuit packs to investigate problems, tests should always be run on both circuit packs on the associated fiber link, whether the circuit packs are both Expansion Interface circuit packs, or one is a Switch Node Interface circuit pack. This will provide a better indication of where a problem is located.

When testing of the EI is not possible, (for example, when the EPN is down), see the "Expansion Interface Manual Loop Back Procedure" on page E-34.

Expansion Interface Neighbor Query Test (#237)

This test is non-destructive.

The Expansion Interface Neighbor Query Test is a request to an Expansion Interface circuit pack to determine if it has established communication with its neighbor Expansion Interface or Switch Node Interface circuit pack.

Table 9-163. TEST #237 Expansion Interface Neighbor Query Test

Error Code	Test Result	Description/ Recommendation
1033	ABORT	The Expansion Interface circuit pack does not have a fiber link administered to it. There is not sufficient data to run test. 1. Issue the **list fiber-link** command to verify that there is no fiber link administered to this circuit pack. 2. If there is no fiber administered to this circuit pack, but there should be add the correct fiber using the **add fiber-link** command. 3. Retry the command. 4. If the test still aborts with this abort code, follow normal escalation procedures.
2000	ABORT	Response to the test request was not received within the allowable time period. 1. Retry the command at 1-minute intervals a maximum of 3 times. 2. If the test continues to abort, follow normal escalation procedures.
2031	ABORT	The attempt to send the message to the Expansion Interface circuit pack, asking it who it's neighbor is, was not successful. 1. Retry the command at 1-minute intervals a maximum of 3 times. 2. If the test continues to abort, follow normal escalation procedures.

Continued on next page

Table 9-163. TEST #237 Expansion Interface Neighbor Query Test — *Continued*

Error Code	Test Result	Description/ Recommendation
2100	ABORT	System resources required to run this test are not available. 1. Retry the command at 1-minute intervals a maximum of 3 times. 2. If the test continues to abort, follow normal escalation procedures.
2500	ABORT	Internal System Error 1. Retry the command at 1-minute intervals a maximum of 3 times. 2. If the test continues to abort, follow normal escalation procedures.
1033	FAIL	The Expansion Interface circuit pack under test cannot make contact with its neighbor Expansion Interface or Switch Node Interface circuit pack. 1. Perform the "Fiber Fault Isolation Procedure" described in Chapter 5, "Responding to Alarms and Errors". 2. If the test continues to abort, follow normal escalation procedures.

Continued on next page

Table 9-163. TEST #237 Expansion Interface Neighbor Query Test — *Continued*

Error Code	Test Result	Description/ Recommendation
2027	FAIL	The Expansion Interface circuit pack has contact with the neighboring Expansion Interface or Switch Node Interface circuit pack, but it is the incorrect Expansion Interface or Switch Node Interface circuit pack. 1. Enter **list fiber-links** and verify that all fiber link cables are installed as they are administered. 2. Repeat the command.
	PASS	The Expansion Interface circuit pack has successfully established a link with the neighbor Expansion Interface or Switch Node Interface circuit pack. 1. If the **status port-network** command still indicates that this link is down, it is possible that one or both of the Expansion Interface and/or Switch Node Interface circuit packs have been busied out. 2. If the link still does not come up, reset one or both Expansion Interface and/or Switch Node Interface circuit packs on the link.

Expansion Interface Fiber Out-of-Frame (FOOF) Query Test (#238)

This test is non-destructive.

This test is a request to an Expansion Interface circuit pack to determine if it is currently detecting the framing sequence on the incoming fiber data stream. If it cannot detect this framing signal, the Expansion Interface circuit pack will not be able to establish a link with the neighbor Expansion Interface or Switch Node Interface circuit pack.

Table 9-164. TEST #238 Expansion Interface Fiber Out-of-Frame Query Test

Error Code	Test Result	Description/ Recommendation
1033	ABORT	The Expansion Interface circuit pack does not have a fiber link administered to it. There is not sufficient data to run test. 1. Issue the **list fiber-link** command to verify that there is no fiber link administered to this circuit pack. 2. If there is no fiber administered to this circuit pack, but there should be add the correct fiber using the **add fiber-link** command. 3. Retry the command. 4. If the test still aborts with this abort code, follow normal escalation procedures.
2000	ABORT	Response to the test request was not received within the allowable time period. 1. Retry the command at 1-minute intervals a maximum of 3 times. 2. If the test continues to abort, follow normal escalation procedures.
2100	ABORT	System resources required to run this test are not available. 1. Retry the command at 1-minute intervals a maximum of 3 times. 2. If the test continues to abort, follow normal escalation procedures.

Continued on next page

Table 9-164. TEST #238 Expansion Interface Fiber Out-of-Frame Query Test — *Continued*

Error Code	Test Result	Description/ Recommendation
2500	ABORT	Internal System Error 1. Retry the command at 1-minute intervals a maximum of 3 times. 2. If the test continues to abort, follow normal escalation procedures.
	FAIL	Expansion Interface circuit pack could not detect framing sequence. 1. If the Expansion Interface circuit pack that is failing Test #238 is in the EPN, and the red LED s are ON on a large number of circuit packs, then reseat any Tone-Clock circuit packs in the EPN. See the "How to Replace the Tone-Clock Circuit Pack" section of TONE-BD in Chapter 9, "Maintenance Object Repair Procedures". 2. Perform the "Fiber Fault Isolation Procedure" described in Chapter 5, "Responding to Alarms and Errors". 3. Enter **display errors** and follow the associated repair procedures for any SNC-BD, TDM-BUS, TDM-CLK, or SYNC errors. 4. If the test continues to abort, follow normal escalation procedures.
	PASS	The Expansion Interface circuit pack has detected the valid framing signal on the fiber. 1. Refer to errors from other Expansion Interface circuit pack, Switch Node Interface tests, or DS1C tests (if present) if the link is still not functioning.

Expansion Interface Local Looparound (#240)

This test is non-destructive.

The EI local looparound is similar to the Lightwave Transceiver looparound described in test #242. A test tone is received by the EI being tested, but is not transmitted out to the fiber interface before being looped back. The loopback is internal to the circuit pack. Thus, this test does not interfere with the normal fiber data stream.

Table 9-165. TEST #240 Expansion Interface Local Looparound

Error Code	Test Result	Description/ Recommendation
1	ABORT	Could not allocate time slot on TDM Bus A. Loop back passed on TDM Bus B.
2	ABORT	Could not allocate time slot on TDM Bus B. Loop back passed on TDM Bus A. 1. If there is no reason to doubt that the Expansion Interface circuit pack can transfer data to or from a TDM Bus, then since the test passed on one bus, assume that the test will pass on the other bus as well. 2. If this test continues aborting with the same error rerun test at 1-minute intervals a maximum of 3 times. Apply the passing criteria for Step 2 to each result. 3. If the test still does not pass on the other TDM Bus, follow the procedure for abort error code 3.
3	ABORT	The system could not allocate time slots for the test on either TDM Bus. The system may be under heavy traffic conditions or it may have time slots out-of-service due to TDM-BUS errors. Enter **display errors** and follow associated repair procedures for TDM-BUS errors. 1. If system has no TDM-BUS errors and is not handling heavy traffic, repeat test at 1-minute intervals a maximum of 3 times. 2. If test continues to abort, follow normal escalation procedures.

Continued on next page

Table 9-165. TEST #240 Expansion Interface Local Looparound — *Continued*

Error Code	Test Result	Description/ Recommendation
1003	ABORT	The system could not allocate a tone receiver for the test. The system may be oversized for the number of tone detectors present or some tone detectors may be out of service. 1. Enter **display errors** and follow associated repair procedures for TTR-LEV errors in the error log. Even if there are not TTR-LEV errors, there still may not be a Tone Detector available on the network that contains the circuit pack being tested. Verify that there is at least one Tone Detector on this network. If not, this test will always abort for this Expansion Interface circuit pack. This will not harm the system in any way. 2. Look for TONE-PT errors in the error log. If present, refer to TONE-PT (Tone Generator) Maintenance documentation. 3. If neither condition exists, retry the test at 1 minute intervals for a maximum of 3 retries. 4. If the test continues to abort follow normal escalation procedures.
1031	ABORT	A query of the Expansion Interface circuit pack aborted. The purpose of this query was to see if the Expansion Interface circuit pack could detect the framing signal. 1. If Test #238 aborted, follow the procedure associated with this abort code. 2. If Test #238 did not abort, rerun Test #240 at 1-minute intervals a maximum of 3 times. 3. If Test #240 continues to abort without Test #238 aborting, follow normal escalation procedures.
1032	ABORT	The EI cannot detect the framing signal and cannot run the test. 1. Refer to the errors for test #238 to determine why the Expansion Interface circuit pack is out of frame.

Continued on next page

Table 9-165. TEST #240 Expansion Interface Local Looparound — *Continued*

Error Code	Test Result	Description/ Recommendation
1033	ABORT	The Expansion Interface circuit pack does not have a fiber link administered to it. There is not sufficient data to run test. 1. Issue the **list fiber-link** command to verify that there is no fiber link administered to this circuit pack. 2. If there is no fiber administered to this circuit pack, but there should be add the correct fiber using the **add fiber-link** command. 3. Retry the command. 4. If the test still aborts with this abort code, follow normal escalation procedures.
1394	ABORT	The Expansion Interface circuit pack is out of service and the test cannot be run. This condition is due to a change in the Expansion Interface circuit pack's ability to communicate with the Expansion Interface or Switch Node Interface circuit pack on the other end of the fiber. 1. Run Test #237 and check the Error Log for EXP-INTF error type 1281. If error type 1281 is present or if Test #237 does not pass, refer to repair procedures for Test #237. 2. Repeat Test #240. If it continues to abort with this abort code, follow normal escalation procedures.
1395	ABORT	This test cannot be run on an Expansion Interface circuit pack if it is part of the B-side Port Network Connectivity and Duplicated Port Network Connectivity is not enabled. 1. If this test needs to run on this Expansion Interface circuit pack, enable Port Network Connectivity with the **change system-parameters duplication** command. 2. Prevent the system from doing a PNC interchange by executing the **set PNC lock** command. 3. Repeat this test.

Continued on next page

Table 9-165. TEST #240 Expansion Interface Local Looparound — *Continued*

Error Code	Test Result	Description/ Recommendation
2000	ABORT	Response to the test request was not received within the allowable time period. 1. Retry the command at 1 minute intervals for a maximum of 3 retries. 2. If the test continues to abort follow normal escalation procedures.
2100	ABORT	Could not allocate the necessary system resources to run this test. 1. Retry the command at 1 minute intervals for a maximum of 3 retries. 2. If the test continues to abort follow normal escalation procedures.
2500	ABORT	Internal System Error 1. Retry the command at 1 minute intervals for a maximum of 3 retries. 2. If the test continues to abort escalate the problem.

Continued on next page

Table 9-165. TEST #240 Expansion Interface Local Looparound — *Continued*

Error Code	Test Result	Description/ Recommendation
1	FAIL	Loop back on TDM Bus A failed. Loop back on TDM Bus B passed.
2	FAIL	Loop back on TDM Bus B failed. Loop back on TDM Bus A passed.
3	FAIL	Loop back on both TDM Buses failed.
12	FAIL	Loop back on TDM Bus B failed. Loop back on TDM Bus A aborted because the system could not allocate time slots.
21	FAIL	Loop back on TDM Bus A failed. Loop back on TDM Bus B aborted because the system could not allocate time slots.
None	FAIL	The test tone was not detected correctly after being looped through the Expansion Interface circuit pack. 1. If error type 2305 has been logged against the Expansion Interface circuit pack in the last 5 minutes, this test could have failed due to the associated slips. If this is the case, first resolve the 2305 error, and then repeat test. 2. Run the tests for the Active Tone-Clock on the Port Network that contains the defective Expansion Interface circuit pack to verify that dial-tone is being supplied. 3. If the tone-clock is healthy, repeat the short test on the Expansion Interface circuit pack. 4. If this test continues to fail, replace Expansion Interface circuit pack.
	PASS	Test tone was correctly detected after internal Expansion Interface loopback on both TDM Busses. 1. Refer to other Expansion Interface circuit pack tests if the links between this Expansion Interface circuit pack and the Expansion Interface or Switch Node Interface circuit pack on the other end of the fiber is not functioning correctly.

Expansion Interface 2-way Transmission Test (#241)

This test is non-destructive.

The EI 2-way transmission test is a basic connectivity test between two Port Networks. The test first sends dialtone from the cabinet of the Expansion Interface circuit pack under test through the Center Stage Switch (if so equipped), through the DS1C circuit packs (if so equipped), and through another Expansion Interface circuit pack to a tone detector in the other cabinet. The connections are then reversed and the tone is passed in the opposite direction. If the system is equipped with a Center Stage Switch, and this test either fails or aborts with the above connection, a second Port Network will be chosen (if one is available and the Expansion Interface circuit pack is In-Service) and the same test is run on this new connection. This helps in the isolation of the fault. Since two Expansion Interface circuit packs are involved in the connection, either one of them could be at fault and this repeated test can help determine which is actually at fault.

The path used in this test is represented in Figure 9-38 below.

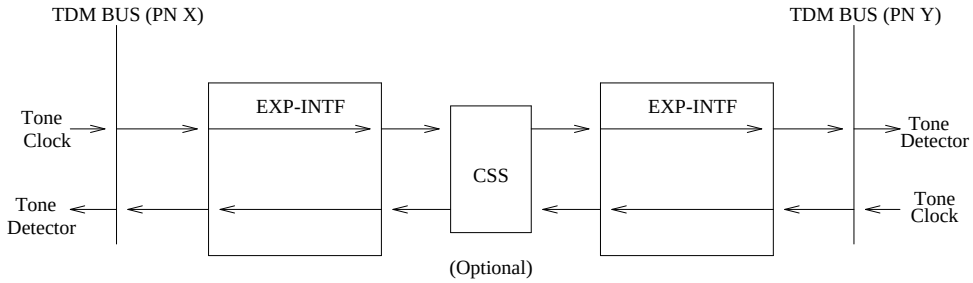

Figure 9-38. Two-Way Circuit Switch Transmission Test

Table 9-166. TEST #241 Expansion Interface 2-way Transmission Test

Error Code	Test Result	Description/ Recommendation
1002	ABORT	The system could not allocate time slots for the test. The system may be under heavy traffic conditions or it may have time slots out of service due to TDM-BUS errors. Enter **display errors** and follow associated repair procedures for TDM-BUS errors. 1. If system has no TDM-BUS errors and is not handling heavy traffic, repeat test at 1-minute intervals a maximum of 3 times. 2. If test continues to abort, follow normal escalation procedures.
1003	ABORT	The system could not allocate a tone receiver for the test. The system may be oversized for the number of tone detectors present or some tone detectors may be out of service. 1. Enter **display errors** and follow associated repair procedures for TTR-LEV errors in the error log. Even if there are not TTR-LEV errors, there still may not be a Tone Detector available on the network that contains the circuit pack being tested. Verify that there is at least one Tone Detector on this network. If not, this test will always abort for this Expansion Interface circuit pack. This will not harm the system in any way. **NOTE:** G3 systems require that Tone Detector circuit packs (TN768) must be of vintage "B" or newer. If older Tone Detector circuit packs are installed in the system, this test well always abort with this abort code. 2. Enter **display errors** and follow associated repair procedures for TONE-PT errors. 3. If neither condition exists, retry the test at 1 minute intervals for a maximum of 3 retries. 4. If the test continues to abort follow normal escalation procedures.

Continued on next page

Table 9-166. TEST #241 Expansion Interface 2-way Transmission Test — *Continued*

Error Code	Test Result	Description/ Recommendation
1033	ABORT	The test cannot run because either the Expansion Interface circuit pack does not have a fiber link administered to it and there is not sufficient data to run the test, or there were no other Port Networks administered that had its Expansion Interface circuit pack In-Service. 1. Check fiber administration to insure that there is a fiber link administered to this Expansion Interface circuit pack. 2. If there is a fiber administered to this Expansion Interface circuit pack, then some change in the status of the ability of the Expansion Interface circuit pack in the other Port Networks to communicate with the Expansion Interface or Switch Node Interface circuit pack on the other end of its fiber has occurred. 3. Test #237 and check for EXP-INTF circuit pack error type 1281 in the Error Log for the Expansion Interface circuit packs in these other Port Networks. If error type 1281 is present and/or Test #237 does not pass, refer to repair procedures for Test #237. 4. If Test #237 passes, reseat the Expansion Interface circuit pack. This will not be destructive since the circuit pack cannot be serving as the Expansion Archangel if it is not in service. 5. Repeat Test #241. If it continues to abort with this abort code, follow normal escalation procedures.

Continued on next page

Table 9-166. TEST #241 Expansion Interface 2-way Transmission Test — *Continued*

Error Code	Test Result	Description/ Recommendation
1394	ABORT	The Expansion Interface circuit pack is out of service and the test cannot be run. This condition is due to a change in the Expansion Interface circuit pack's ability to communicate with the Expansion Interface or Switch Node Interface circuit pack on the other end of the fiber. 1. Run Test #237 and check the Error Log for EXP-INTF error type 1281. If error type 1281 is present or if Test #237 does not pass, refer to repair procedures for Test #237. 2. Repeat this test. If it continues to abort with this abort code, follow normal escalation procedures.
1395	ABORT	This test cannot be run on an Expansion Interface circuit pack if it is part of the B-side Port Network Connectivity and Duplicated Port Network Connectivity is not enabled. 1. If this test needs to run on this Expansion Interface circuit pack, enable Port Network Connectivity with the **change system-parameters duplication** command. 2. Prevent the system from doing a PNC interchange by executing the **set PNC lock** command. 3. Repeat this test.

Continued on next page

Table 9-166. TEST #241 Expansion Interface 2-way Transmission Test — *Continued*

Error Code	Test Result	Description/ Recommendation
1413	ABORT	This test requires the use of a Tone/Clock circuit pack in each of the port networks used in this test. This abort code indicates that there are none of these circuit packs located in one of the port networks. 1. Make sure that there is a Tone/Clock circuit pack located in the port network in which the Expansion Interface circuit pack under test is located. 2. In Direct Connect configurations, make sure that there is a Tone/Clock circuit pack located in the port network where the neighbor Expansion Interface circuit pack is located. 3. In Center Stage Switch configurations, make sure that there is at least one other port network, besides the port network where the Expansion Interface circuit pack under test resides, that contains a Tone/Clock circuit pack. 4. Repeat this test. If it continues to abort with this abort code, follow normal escalation procedures.
1414	ABORT	This test requires the use of an active Tone/Clock circuit pack in each of the port networks used in this test that does not have a MAJOR or MINOR alarm logged against it. This abort code indicates that the active Tone/Clock circuit pack in one of the port networks being used for the test has a MAJOR or MINOR alarm logged against it. 1. Enter **display alarms** and follow associated repair procedures to resolve all TONE-BD and TONE-PT alarms. 2. Repeat this test. If it continue to abort with this abort code, follow normal escalation procedures.
2000	ABORT	Response to the test request was not received within the allowable time period. 1. Retry the command at 1 minute intervals for a maximum of 3 retries. 2. If the test continues to abort escalate the problem.

Continued on next page

Table 9-166. TEST #241 Expansion Interface 2-way Transmission Test — *Continued*

Error Code	Test Result	Description/ Recommendation
2100	ABORT	System resources required to run this test are not available. 1. Retry the command at 1 minute intervals for a maximum of 3 retries. 2. If the test continues to abort escalate the problem.
2500	ABORT	Internal System Error 1. Retry the command at 1 minute intervals for a maximum of 3 retries. 2. If the test continues to abort escalate the problem.
	FAIL	The test tone was not detected correctly in either direction. 1. Run the test for the Active Tone-Clocks on the Port Networks for which the Expansion Interface circuit pack under test provides a link. This will determine if the dial tone is being supplied. 2. Perform the "Fiber Fault Isolation Procedure" described in Chapter 5, "Responding to Alarms and Errors". 3. If this test continues to abort, follow normal escalation procedures.

Continued on next page

Table 9-166. TEST #241 Expansion Interface 2-way Transmission Test — *Continued*

Error Code	Test Result	Description/ Recommendation
1 or 2	FAIL	The test tone was detected correctly in one direction, but not the opposite direction. 1. Run the test for the Active Tone-Clocks on the Port Networks for which the defective Expansion Interface circuit pack provides a link. This will determine if the dial tone is being supplied. 2. Perform the "Fiber Fault Isolation Procedure" described in Chapter 5, "Responding to Alarms and Errors". 3. If this test continues to abort, follow normal escalation procedures. **Center Stage:** These failure codes are possible on a Center Stage Switch configuration only when there is just one other port network available for looping back the test tone. 1. Perform the "Fiber Fault Isolation Procedure" described in Chapter 5, "Responding to Alarms and Errors". 2. If this test continues to abort, follow normal escalation procedures.

Continued on next page

Table 9-166. TEST #241 Expansion Interface 2-way Transmission Test — *Continued*

Error Code	Test Result	Description/ Recommendation
3 or 4	FAIL	The failure codes only apply to a system equipped with a Center Stage Switch. They indicate that the test aborted or failed for the first connection from the Expansion Interface circuit pack under test to another EPN, and that the test tone was detected correctly in one direction, but not the opposite direction when the connection was between the Expansion Interface circuit pack under test and a different EPN than was used in the first connection. 1. Run the test for the Active Tone-Clocks on the Port Networks for which the defective Expansion Interface circuit pack provides a link. This will determine if the dial tone is being supplied. 2. Perform the "Fiber Fault Isolation Procedure" described in Chapter 5, "Responding to Alarms and Errors". 3. If this test continues to abort, follow normal escalation procedures
	PASS	The tone was successfully transmitted in both directions. Both Expansion Interface circuit packs, Switch Node Interface circuit packs used in the connection, DS1C circuit packs (if so equipped), and their lightwave transceivers are functioning properly.

Expansion Interface Lightwave Transceiver Looparound Test (#242)

This test is destructive.

This test is destructive and requires that the Expansion Interface circuit pack first be busied out. If the system has a duplicated Port Network Connectivity, this test cannot be run on an Expansion Interface circuit pack that resides on the current active PNC due to restrictions that prohibit the busying-out of certain components that are part of the active PNC. If this test is run on an Expansion Interface circuit pack that is part of the Standby PNC, this test is not destructive and no service outages will take place.

In a system without duplicated Port Network Connectivity, where this Expansion Interface circuit pack supports a PPN to EPN link, this test will disrupt service to one EPN (Direct Connect) or all EPN s (Center Stage). If the Expansion Interface circuit pack is part of an EPN to EPN link in a Direct Connect system, service between the two EPN s will be disrupted.

This is a two part connectivity test. In the first part of the test, a digital count is transmitted from the cabinet of the Expansion Interface circuit pack under test, through the Expansion Interface circuit pack under test, out to its lightwave transceiver. The connection then loops back into the lightwave transceiver through the same Expansion Interface circuit pack again and into the originating cabinet. If the test tone is detected by a tone detector, the first part of the test passes. The path used for this part of the test is represented in Figure 9-39 on page E-64, “TDM BUS Lightwave Transceiver Loop Around.”

In the second part of the test, a data packet is sent from the TN1655 Packet Interface circuit pack to the Expansion Interface circuit pack under test, the packet is looped back through the lightwave transceiver and is sent back to the Packet Interface circuit pack. If the Packet Interface circuit pack receives the same packet it transmitted, the second part of the test passes. If the entire test has passed, the Expansion Interface circuit pack, its backplane wiring and the electrical portion of the lightwave transceiver are healthy.

The path used for this test if the Expansion Interface is located in the PPN is represented in Figure 9-40 on page E-64, “Packet BUS Lightwave Transceiver Loop Around—PPN only.”

The path used for this test if the Expansion Interface is located in an EPN is represented in Figure 9-40 on page E-64, “Packet BUS Lightwave Transceiver Loop Around—PPN only.”

NOTE:
When the Expansion Interface circuit pack under test is in an EPN, the data packet must also pass through the Active Expansion Interface circuit packs and the Active DS1C circuit packs (and the Active Switch Node Interface circuit pack(s) in a Center Stage Switch system) of the Active PNC link connecting the EPN to the PPN.

This test requires the Expansion Interface circuit pack to ignore incoming data from its neighbor Expansion Interface circuit pack or Switch Node Interface circuit pack. Thus this test will disturb any inter-port network connections that currently exist over the link provided by the Expansion Interface under test and its neighbor and disrupt signaling between the two circuit packs.

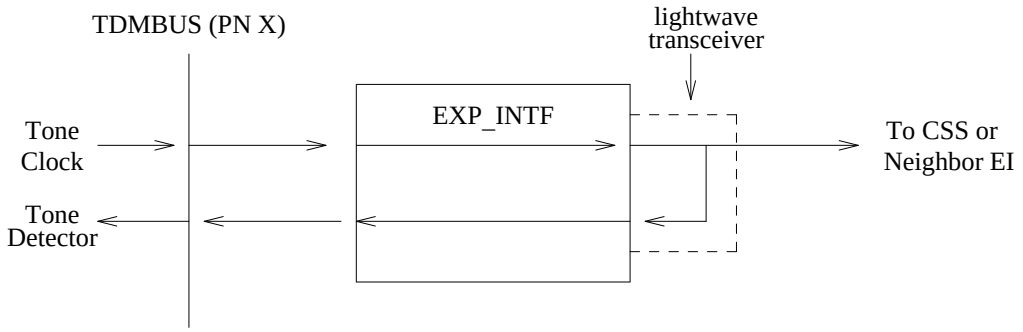

Figure 9-39. TDM BUS Lightwave Transceiver Loop Around

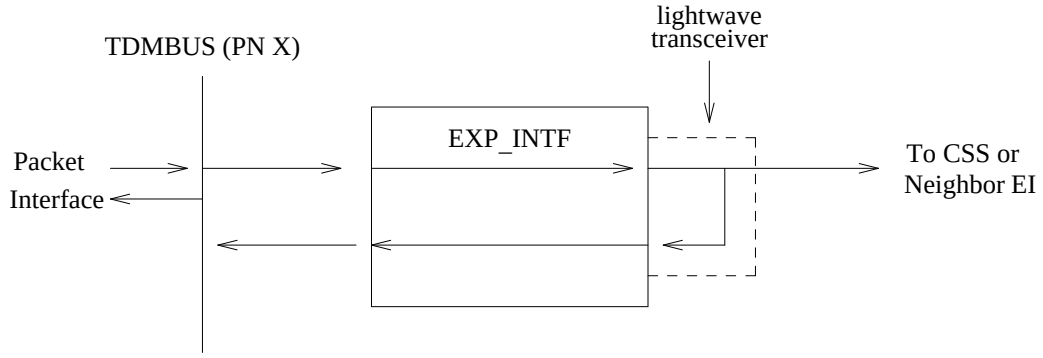

Figure 9-40. Packet BUS Lightwave Transceiver Loop Around—PPN only

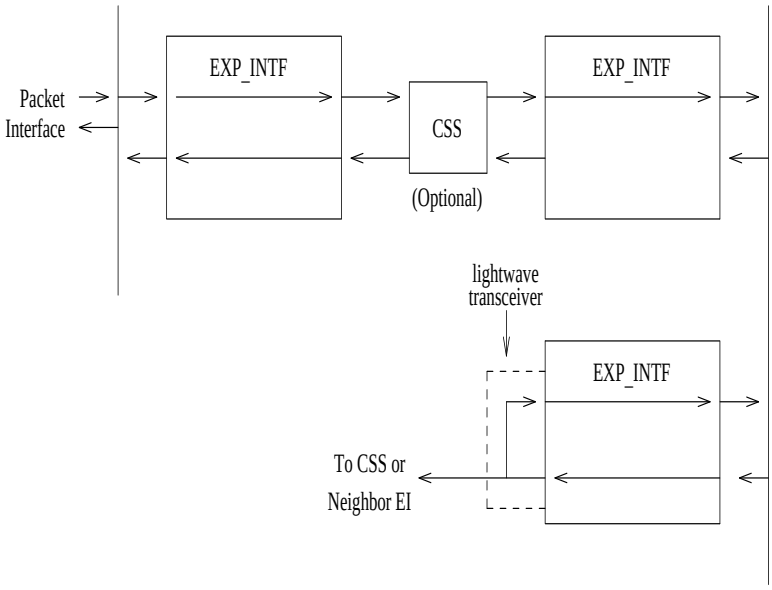

Figure 9-41. Packet BUS Lightwave Transceiver Loop Around—EPN only

Table 9-167. TEST #242 Expansion Interface Lightwave Transceiver Looparound

Error Code	Test Result	Description/ Recommendation
1002	ABORT	The system could not allocate timeslots for the test. The system may be under heavy traffic conditions or it may have timeslots out of service due to TDM-BUS errors. Enter **display errors** and follow associated repair procedures for TDM-BUS (TDM Bus). 1. If system has no TDM-BUS errors and is not handling heavy traffic, repeat test at 1 minute intervals for a maximum of 3 times. 2. If the test continues to abort follow normal escalation procedures.
1003	ABORT	The system could not allocate a tone receiver for the test. The system may be oversized for the number of Tone Detectors present or some Tone Detectors may be out of service. 1. Enter **display errors** and follow associated repair procedures for TTR-LEV. Even if there are no TTR-LEV errors, there still may not be a Tone Detector available on the network that contains the circuit pack being tested. Verify that there is at least one Tone Detector on this network. If there is not at least one Tone Detector, this test will always abort for this Expansion Interface circuit pack. This will not harm the system in any way. 2. Enter **display errors** and follow associated repair procedures for TONE-PT. 3. If neither condition exists, retry the test at 1 minute intervals for a maximum of 3 times. 4. If the test continues to abort follow normal escalation procedures.
1015	ABORT	The system will not allow this test to be run because the Expansion Interface circuit pack has not been busied out. 1. Busyout the Expansion Interface circuit pack. Then, repeat the **test board UUCSS long** command.

Continued on next page

Table 9-167. TEST #242 Expansion Interface Lightwave Transceiver Looparound — *Continued*

Error Code	Test Result	Description/ Recommendation
1031	ABORT	If the Expansion Interface circuit pack is in an EPN and is on the active PNC, and is not part of an EPN to EPN link, this test CANNOT be executed. If the lightwave transceiver looparound is activated, it is impossible to deactivate it. 1. If PNC Duplication is enabled, attempt to make the Standby PNC active via the "reset pnc interchange" command. 2. If the PNC Interchange is successful, the lightwave transceiver looparound test may now be executed on the original Expansion Interface circuit pack.
1033	ABORT	The test cannot run because the Expansion Interface circuit pack does not have a fiber link administered to it and there is not sufficient data to run the test. 1. Issue the **list fiber-link** command to verify that there is no fiber link administered to this circuit pack. 2. If there is no fiber administered to this circuit pack, but there should be add the correct fiber using the **add fiber-link** command. 3. Retry the command. 4. If the test still aborts with this abort code, follow normal escalation procedures.
1139	ABORT	The Packet Bus in the Expansion Port Network where this Expansion Interface circuit pack is located has a major alarm against it. This test needs to use the alarmed port network's Packet Bus. 1. Enter **display alarms** and **display errors** and follow associated repair procedures for PKT-BUS to resolve the alarm. 2. Retry the command.
1141	ABORT	The Packet Interface circuit pack is out of service. 1. Refer to PKT-INTF (Packet Interface circuit pack) Maintenance documentation for the recommended repair procedure.

Continued on next page

Table 9-167. TEST #242 Expansion Interface Lightwave Transceiver Looparound — *Continued*

Error Code	Test Result	Description/ Recommendation
1144	ABORT	The Packet Bus in the PPN has a major alarm against it. This test needs to use the alarmed PPN Packet Bus. 1. Enter **display alarms** and **display errors** and follow associated repair procedures for PKT-BUS to resolve the alarm. 2. Retry the command.
1394	ABORT	The Expansion Interface circuit pack is out of service and the test cannot be run. This condition is due to a change in the Expansion Interface circuit pack's ability to communicate with the Expansion Interface or Switch Node Interface circuit pack on the other end of the fiber. 1. Run Test #237 and check the Error Log for EXP-INTF error type 1281. If error type 1281 is present or if Test #237 does not pass, refer to repair procedures for Test #237. 2. Repeat this test. If it continues to abort with this abort code, follow normal escalation procedures.
1395	ABORT	This test cannot be run on an Expansion Interface circuit pack if it is part of the B-side Port Network Connectivity and Duplicated Port Network Connectivity is not enabled. 1. If this test needs to run on this Expansion Interface circuit pack, enable Port Network Connectivity with the **change system-parameters duplication** command. 2. Prevent the system from doing a PNC interchange by executing the **set PNC lock** command. 3. Repeat this test.

Continued on next page

Table 9-167. TEST #242 Expansion Interface Lightwave Transceiver Looparound — *Continued*

Error Code	Test Result	Description/ Recommendation
1407	ABORT	This test cannot be run on an Expansion Interface circuit pack that is on the active PNC because it cannot be busied out. This error code indicates that PNC duplication is enabled. 1. Attempt to perform a PNC interchange via the **reset pnc interchange** command. 2. If the PNC interchange is successful, busy out the original Expansion Interface circuit pack via the **busyout board UUCSS** command where UUCSS is the address of the original Expansion Interface circuit pack. 3. Retry the command.
2000	ABORT	1. Retry the command at 1 minute intervals for a maximum of 3 retries. 2. If the test continues to abort follow normal escalation procedures. Response to the test request was not received within the allowable time period.
2060	ABORT	The link on the Packet Bus being used to perform the test has failed. 1. Retry the command at 1 minute intervals a maximum of 3 times. 2. If the test continue to abort, enter **display errors** and follow the associated repair procedures for PKTINT errors. 3. If there is no problem with the Packet Interface circuit pack, follow normal escalation procedures.
2100	ABORT	Could not allocate the necessary system resources to run this test. 1. Retry the command at 1 minute intervals for a maximum of 3 retries. 2. If the test continues to abort follow normal escalation procedures.

Continued on next page

Table 9-167. TEST #242 Expansion Interface Lightwave Transceiver Looparound — *Continued*

Error Code	Test Result	Description/ Recommendation
2500	ABORT	Internal System Error 1. Retry the command at 1 minute intervals for a maximum of 3 retries. 2. If the test continues to abort escalate the problem.
1	FAIL	The test did not detect the test tone through the looparound connection. **NOTE:** The packet portion of this test was not run since the circuit portion failed. 1. Test the Active Tone-Clock on the Port Network that contains the defective Expansion Interface circuit pack to verify that dial tone is being supplied. 2. If the Tone-Clock is healthy, issue the **test board UUCSS long** on the Expansion Interface circuit pack. 3. If this test continues to fail, replace the Expansion Interface circuit pack or transceiver. Then reissue the **test board UUCSS long** on the new Expansion Interface circuit pack.

Continued on next page

Table 9-167. TEST #242 Expansion Interface Lightwave Transceiver Looparound — *Continued*

Error Code	Test Result	Description/ Recommendation
2	FAIL	The test tone was transmitted and detected correctly, but the correct data packet was not detected by the TN1655 Packet Interface circuit pack. 1. Test the TN1655 Packet Interface circuit pack to verify that it is functioning properly. If any tests fail, investigate those tests and repair the Packet Interface circuit pack. 2. If the Packet Interface circuit pack checks out OK, enter **display errors** and **display alarms** and follow the associated repair procedures for SNI-BD and FIBER-LK alarms or errors (Center Stage Switch only) and for DS1C-BD alarms or errors (if so equipped). 3. Issue the **test board UUCSS long** command on the Expansion Interface circuit pack. 4. If test #242 continues to fail, replace the Expansion Interface circuit pack. Then issue the **test board UUCSS long** command on the new Expansion Interface circuit pack. 5. If test #242 continues to fail, replace the lightwave transceiver, reset the circuit pack and issue the **test board UUCSS long** command on the Expansion Interface circuit pack.

Continued on next page

Table 9-167. TEST #242 Expansion Interface Lightwave Transceiver Looparound — *Continued*

Error Code	Test Result	Description/ Recommendation
	PASS	When this (#242) test and the Expansion Interface Local Loop Around Test #240 pass, this indicates that the Expansion Interface circuit pack is functioning properly, but it does not verify that the optical portion of the lightwave transceiver is functioning properly. 1. Issue the **test board UUCSS** command on the Expansion Interface circuit packs on both ends of fiber. If this test passes from both sides, but other tests fail, such as #241, this condition indicates either a faulty lightwave transceiver or the fiber itself has failed. To determine if either a lightwave transceiver or the fiber itself has failed, execute the Expansion Interface Manual Loopback procedure described in a previous section. **NOTE:** Test #242 can only be run from both EI s if they are the standby pair and the active pair is working properly. 2. If this Expansion Interface circuit pack is failing other tests, the Expansion Interface Manual Loopback Test should be executed. 3. If problems still exist after the Expansion Interface Manual Loopback Procedure indicates both Expansion Interface circuit packs and both lightwave transceivers are healthy, manually check out the building fiber. Verify that each optical fiber is connected to a transmitter at one end and a receiver at the other.

Expansion Interface Control Channel Test (#316)

This test is non-destructive.

If an Expansion Interface circuit pack is a standby Expansion Interface circuit pack (yellow LED off) or if the Expansion Interface is active in the PPN (yellow LED on), this test queries the Expansion Interface circuit pack for its circuit pack type and vintage information. If the Expansion Interface circuit pack is an active Expansion Interface circuit pack in the EPN (yellow LED on long off short) the Expansion Interface Control Channel test checks to see if the Expansion Interface circuit pack can communicate with other circuit packs in the EPN using the EPN TDM bus.

Table 9-168. TEST #316 Expansion Interface Control Channel Test

Error Code	Test Result	Description/ Recommendation
2000	ABORT	Response to the test request was not received within the allowable time period. 1. Retry the command at 1 minute intervals for a maximum of 3 retries. 2. If the test continues to abort follow normal escalation procedures.
2100	ABORT	Could not allocate the necessary system resources to run this test. 1. Retry the command at 1 minute intervals for a maximum of 3 retries. 2. If the test continues to abort follow normal escalation procedures.
2500	ABORT	Internal System Error 1. Retry the command at 1 minute intervals for a maximum of 3 retries. 2. If the test continues to abort follow normal escalation procedures.

Continued on next page

Table 9-168. TEST #316 Expansion Interface Control Channel Test — *Continued*

Error Code	Test Result	Description/ Recommendation
	FAIL	The Expansion Interface circuit pack responded incorrectly or if it is the EPN active Expansion Interface circuit pack, it could not talk to EPN circuit packs. 1. If the active Expansion Interface circuit pack in the EPN is failing and duplicated Port Network Connectivity is enabled, attempt to switch to the standby PNC using the **reset PNC interchange** command. 2. Repeat the short test sequence. 3. If test continues to fail, reset the Expansion Interface circuit pack via the **reset board UUCSS** command. 4. If the Expansion Interface circuit pack in the EPN is failing, enter **display errors** and **display alarms** and follow the associated repair procedures for TDM-CLK, TONE-BD, or SYNC alarms and/or errors and repeat the Short Test Sequence. 5. If test continues to fail, replace the circuit pack or transceiver.
	PASS	The Expansion Interface circuit pack did respond correctly to test. Communication from software to the Expansion Interface circuit pack is functioning. 1. Refer to other Expansion Interface circuit pack tests if the link is not functioning correctly.

Expansion Interface Reset Test (#336)

This test is destructive.

This test is potentially very destructive and requires the Expansion Interface circuit pack to be busied out prior to execution of this test.

The Expansion Interface Reset test, which is not part of either the Short or the Long test sequences test is executed via the **reset board UUCSS** command where UUCSS is the address of the Expansion Interface circuit pack to be reset.

If the system does not have Duplicated Port Network Connectivity, and is a Direct Connect system, and one of the Expansion Interface circuit packs must be reset, the action of busying out the desired Expansion Interface circuit pack will deny calls to the EPN until the Expansion Interface circuit pack is released from the busyout state. If the Expansion Interface circuit pack is part of a PPN to EPN link, new connections to the EPN will be denied. If the Expansion Interface circuit pack is part of an EPN to EPN link, calls between the two EPN s will be denied.

In a non-duplicated PNC system with a Center Stage Switch, if the Expansion Interface circuit pack in the EPN is busied out, new service to that EPN only will be denied. However, if the Expansion Interface circuit pack is located in the PPN, new service to all EPN s will be denied until the Expansion Interface circuit pack is released from the busyout state.

If the system does not have duplicated PNC, the reset of any EI is allowed, but it will result in the resetting of all EPN boards and loss of service to the EPN (s) for a few minutes.

If the system does have duplicated PNC, and the Expansion Interface circuit pack to be reset is part of the Active PNC, the system will not allow the busyout and the system technician will be required to interchange the PNCs via the **reset PNC interchange** command. After executing the PNC interchange, it will be possible to busyout and then reset the original Expansion Interface circuit pack.

If the EPN Maintenance (MAINT) circuit pack determines that the Expansion Interface (EXP-INTF) circuit pack is cycling between sane and insane several times within several minutes, MAINT may inhibit operation of the EXP-INTF by holding the Expansion Interface circuit pack in a reset state. This condition may result in an unsuccessful reset of the Expansion Interface circuit pack.

If the reset command returns ''EPN is unavailable,'' execute the following steps:

1. Use the **change circuit-pack P** command, where P is the port network number of the EPN.
2. For the Expansion Interface circuit pack you wish to reset, add an entry to the Circuit Pack form for the TN570 Expansion Interface circuit pack. Be sure to enter the appropriate carrier and slot.
3. Enter the form.
4. Issue the **busyout board UUCSS** command.
5. Repeat the **reset board** command

Table 9-169. TEST #336 Expansion Interface Reset Test

Error Code	Test Result	Description/ Recommendation
4	ABORT	Could not reset the EPN Expansion Interface circuit pack over the optical fiber since the neighbor Expansion Interface circuit pack or Switch Node Interface circuit pack is not recognized by software (inserted). 1. Insert neighbor Expansion Interface circuit pack or Switch Node Interface circuit pack and perform reset again.
1015	ABORT	The system will not allow this test to be run because the Expansion Interface circuit pack has not been busied out. Busyout the Expansion Interface circuit pack. Then, repeat the **reset board UUCSS** command.
2100	ABORT	Could not allocate the necessary system resources to run this test. 1. Retry the command at 1 minute intervals for a maximum of 3 retries. 2. If the test continues to abort follow normal escalation procedures.
2500	ABORT	Internal System Error 1. Retry the command at 1 minute intervals for a maximum of 3 retries. 2. If the test continues to abort escalate the problem.

Continued on next page

Table 9-169. TEST #336 Expansion Interface Reset Test — *Continued*

Error Code	Test Result	Description/ Recommendation
1	FAIL	The EI did not successfully reset. 1. If the Expansion Interface circuit pack is in the EPN, the EPN Maintenance Board may be holding the Expansion Interface circuit pack reset. Attempt to rectify this condition by executing the **test maint P long** command on the maintenance board in the same EPN. 2. If Step #1 was not successful in releasing the Expansion Interface circuit pack, temporarily remove the EPN maintenance circuit pack. 3. Repeat the **reset board UUCSS** command. 4. If reset continues to fail, replace circuit pack. 5. Insert EPN maintenance circuit pack if it was removed.
2	FAIL	The Expansion Interface circuit pack was successfully reset, but it did not begin running after the reset. 1. If the Expansion Interface circuit pack is in the EPN, temporarily remove the EPN maintenance circuit pack. 2. Repeat the **reset board UUCSS** command. 3. Reinsert the EPN maintenance circuit pack if it was removed.
	PASS	The EI was successfully reset. Remove the Expansion Interface circuit pack from the busyout state by using the **release board UUCSS** command. 1. Execute **test board UUCSS short** command. Refer to errors for each test.

Expansion Interface Packet Interface Test (#589)

This test is non-destructive.

This test will attempt to send a data packet from the TN1655 Packet Interface circuit pack through any intervening Expansion Interface circuit packs and/or Switch Node Interface circuit packs and through the Expansion Interface circuit pack to be tested. The path the data packet takes is dependent on the location of the Expansion Interface circuit pack to be tested and whether the system has duplicate Port Network Connectivity. The following diagrams and short discussion of each describe the different paths the test uses.

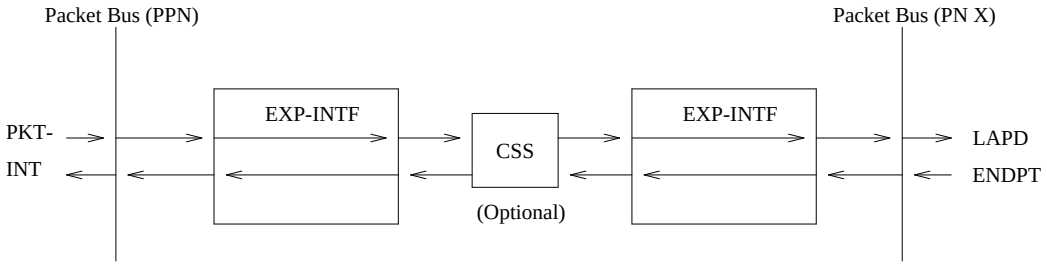

Figure 9-42. Expansion Interface Packet Interface Test—Packet Endpoint Loop

The path shown in Figure 9-42 is used when testing an EPN EI that is on the active PNC.

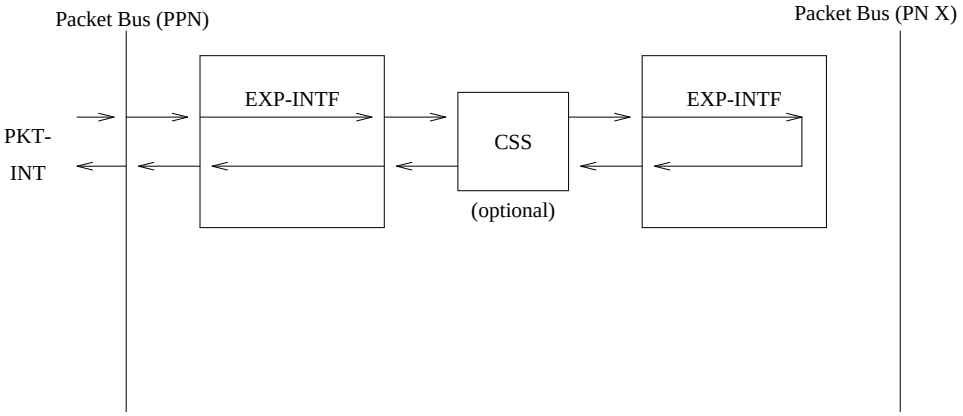

Figure 9-43. Expansion Interface Packet Interface Test—PPN to EPN loop

In a Center Stage configuration the path shown in Figure 9-43 above is used when testing an EPN EI that is on the standby PNC. In a Direct Connect configuration, this path is used on any PPN EI or on an EPN EI that is on the standby PNC.

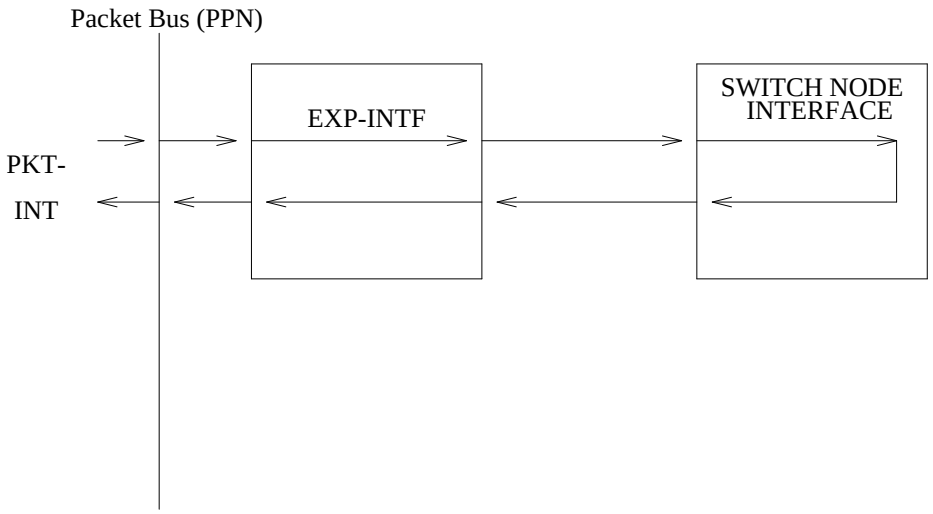

Figure 9-44. Expansion Interface Packet Interface Test—PPN to CSS Loop

The path shown in Figure 9-44 above is used when running the test on a PPN EI in a Center Stage configuration.

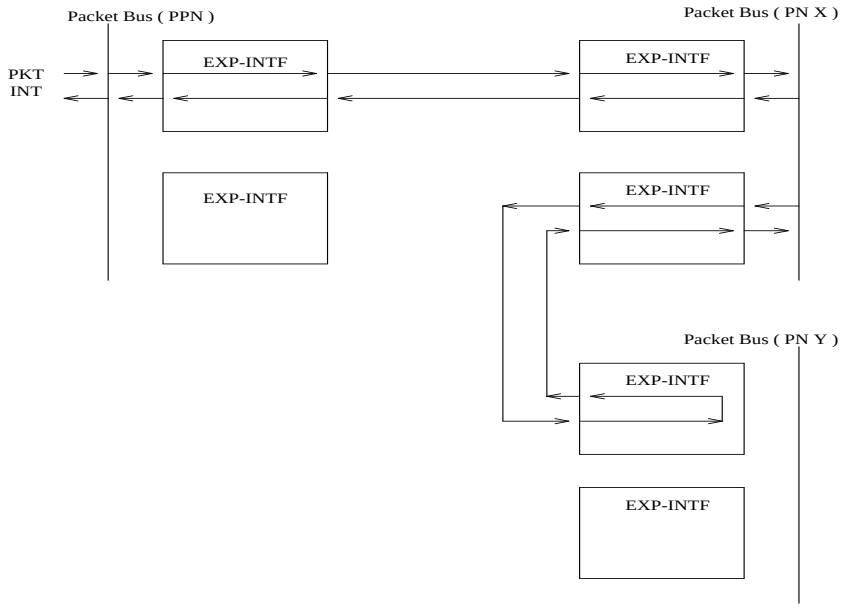

Figure 9-45. Expansion Interface Packet Interface Test-EPN to EPN link

The path shown in Figure 9-45 is used when the EI under test is one that provides connectivity between the two EPN s in a Direct Connect configuration.

Table 9-170. TEST #589 Expansion Interface Packet Interface Test

Error Code	Test Result	Description/ Recommendation
1033	ABORT	The test cannot run because the Expansion Interface circuit pack does not have a fiber link administered to it and there is not sufficient data to run the test or because Expansion Interface circuit packs on other port networks needed for this test are out of service. 1. Execute the **list fiber-link** command and determine if the Expansion Interface circuit pack under test is an endpoint of one of the administered fiber links. If it is one of the administered endpoints of a fiber link, proceed to Step 2. If it is not an administered endpoint, then this is considered to be a spare board and the test should not be attempted on this Expansion Interface circuit pack. 2. Follow procedures for applicable configuration: **DIRECT CONNECT:** 1. Issue the **list config** command for the cabinet and carrier where the neighbor EI circuit pack is located. If the results reveal that the board is not recognized by software, the board is out of service because of this condition. Perform the following steps: a. If this test is being executed on an Expansion Interface circuit pack located in the PPN, enter **display errors** and follow the associated repair procedures for EXP-PN errors for the port network where the neighbor Expansion Interface circuit pack is located. Re-execute this test. b. If this test continues to abort with this abort code reset the DS1C circuit pack (if so equipped) or the neighbor Expansion Interface circuit pack. This will not be destructive since the circuit pack cannot be serving as the Expansion Archangel if it is not in service. 2. Run Test #237 and check for EXP-INTF circuit pack error type 1281 in the Error Log. If error type 1281 is present and/or Test #237 does not pass, refer to repair procedures for Test #237.

Continued on next page

Table 9-170. TEST #589 Expansion Interface Packet Interface Test — *Continued*

Error Code	Test Result	Description/ Recommendation
1033	ABORT	3. If Test #237 passes, reseat the Expansion Interface circuit pack. This will not be destructive since the circuit pack cannot be serving as the Expansion Archangel if it is not in service. 4. Repeat test #237, if the test continues to abort with this abort code, follow normal escalation procedures. **CENTER STAGE:** *If the Expansion Interface circuit pack under test is located in the PPN:* None of the Expansion Interface circuit packs located in the EPNs (on the same PNC side) are in service (for EPN EIs see the next case). 1. Issue the **list fiber-link** command and determine if any of the Expansion Interface circuit packs located in the EPNs are administered as endpoints of a fiber link. If none of them are then ignore the results of this test. 2. Issue the **list conf** command for the cabinets and carriers where the Expansion Interface circuit packs are located in all other EPNs. If the results returned indicated that the circuit packs are not recognized by software, they are out of service for this reason. 3. Issue the **display errors** command and follow the associated repair procedures for EXP-PN errors. Re-execute this test. 4. If the test continues to abort with this error code reseat the Expansion Interface circuit packs (or DS1C circuit pack if so equipped) on the EPNs. This will not be destructive since the circuit pack cannot be serving as the Expansion Archangel if it is not in service

Continued on next page

Table 9-170. TEST #589 Expansion Interface Packet Interface Test — *Continued*

Error Code	Test Result	Description/ Recommendation
1033	ABORT	5. Run Test #237 on each of the EPN Expansion Interface circuit packs and check for EXP-INTF circuit pack error type 1281 in the error log. If error type is present and/or Test #237 does not pass, refer to repair procedures for Test #237. 6. Repeat this test, if it continues to abort with this about code, follow the normal escalation procedures. *If the Expansion under test is located in an EPN:* The Expansion Interface circuit located in the PPN is out of service. 1. Run Test #237 on each of the EPN Expansion Interface circuit packs and check for EXP-INTF circuit pack error type 1281 in the error log. If error type is present and/or Test #237 does not pass, refer to repair procedures for Test #237. 2. Repeat this test, if it continues to about with this about code, follow the normal escalation procedures.
1139	ABORT	The Packet Bus in the Expansion Port Network where this Expansion Interface circuit pack is located has a major alarm against it. This test needs to use the alarmed port network's Packet Bus. 1. Enter **display alarms** and follow the associated repair procedures for PKT-BUS alarms. 2. Retry the command.
1141	ABORT	The Packet Interface circuit pack is out of service. 1. Refer to PKT-INTF (Packet Interface circuit pack) Maintenance documentation for the recommended repair procedure.

Continued on next page

Table 9-170. TEST #589 Expansion Interface Packet Interface Test — *Continued*

Error Code	Test Result	Description/ Recommendation
1144	ABORT	The Packet Bus in the PPN has a major alarm against it. This test needs to use the alarmed PPN Packet Bus. 1. Enter **display alarms** and follow the associated repair procedures for PKT-BUS alarms. 2. Retry the command.
1394	ABORT	The Expansion Interface circuit pack is out of service and the test cannot be run. This condition is due to a change in the Expansion Interface circuit pack's ability to communicate with the Expansion Interface or Switch Node Interface circuit pack on the other end of the fiber. 1. Run Test #237 and check the Error Log for EXP-INTF error type 1281. If error type 1281 is present or if Test #237 does not pass, refer to repair procedures for Test #237. 2. Repeat this test. If it continues to abort with this abort code, follow normal escalation procedures.
1395	ABORT	This test cannot be run on an Expansion Interface circuit pack if it is part of the B-side Port Network Connectivity and Duplicated Port Network Connectivity is not enabled. 1. If this test needs to run on this Expansion Interface circuit pack, enable Port Network Connectivity with the **change system-parameters duplication** command. 2. Prevent the system from doing a PNC interchange by executing the **set PNC lock** command. 3. Repeat this test.

Continued on next page

Table 9-170. TEST #589 Expansion Interface Packet Interface Test — *Continued*

Error Code	Test Result	Description/ Recommendation
1421	ABORT	This abort code appears only when the Expansion Interface circuit pack addressed in the test command is one that terminates a fiber link between two EPNs in a direct connect system. It indicates that the test failed, but that this test was run on the EPN EI board that is: a) In the same EPN as the board under test b) On the active PNC (if duplicated) c) Terminates the fiber from the PPN The EI tested is probably not at fault. 1. Enter **display alarms** and follow the EXP-INTF repair procedures for any alarms against the EPN EI that is: a. In the same EPN as the board just tested b. On the active PNC c. Terminates the fiber link from the PPN 2. If there are no alarms logged against that EI, run test #589 on it and follow procedures for this test. 3. Try this command again.
1422	ABORT	This abort code is valid and will only appear when the EI circuit pack under test is one which is located in an EPN in a system that is configured with a Center Stage Switch. It means that the test failed, but that this test was then run on the PPN EI on the same PNC as the EI under test and that test failed. This means that the EI originally tested is probably not at fault. 1. Resolve any alarms that are logged against the PPN EI that is on the same PNC as the EI under test. 2. If there are no alarms logged against this EI, run test #589 against the EI and follow procedures for this test. 3. Try this command again.
2000	ABORT	Response to the test request was not received within the allowable time period. 1. Retry the command at 1 minute intervals for a maximum of 3 retries. 2. If the test continues to abort escalate the problem.

Continued on next page

Table 9-170. TEST #589 Expansion Interface Packet Interface Test — *Continued*

Error Code	Test Result	Description/ Recommendation
2060	ABORT	The link on the Packet Bus being used to perform the test has failed. 1. Retry the command at 1 minute intervals a maximum of 3 times. 2. If the test continue to abort, enter **display errors** and follow the associated repair procedures for PKT-INT. 3. If there is no problem with the Packet Interface circuit pack, follow normal escalation procedures.
2100	ABORT	Could not allocate the necessary system resources to run this test. 1. Retry the command at 1 minute intervals for a maximum of 3 retries. 2. If the test continues to abort escalate the problem.
2500	ABORT	Internal System Error 1. Retry the command at 1 minute intervals for a maximum of 3 retries. 2. If the test continues to abort escalate the problem.

Continued on next page

Table 9-170. TEST #589 Expansion Interface Packet Interface Test — *Continued*

Error Code	Test Result	Description/ Recommendation
ANY	FAIL	The transmitted data packet was not received correctly by the Packet Interface circuit pack. The failure may be in the EI under test, the DS1C circuit packs (if so equipped), or the intervening Center Stage components (if so equipped). 1. Test the Packet Interface circuit pack with the **test packet-interface 1**CS command where C is the SPE carrier in a duplicated processor, and S is the slot number the Packet Interface is located in. If the Packet Interface circuit pack fails any tests, refer to the PKT-INTF Maintenance documentation for recommended repair procedures. 2. If the EI under test is located in an EPN in a High Reliability system (2 PPN-to-CSS fibers in a simplex PNC), run the short test sequence on both of the PPN EI circuit packs and follow procedures for test #589. 3. Enter **display errors** and follow the associated repair procedures to resolve all PKT-BUS errors. 4. Perform the"Fiber Fault Isolation Procedure" described in Chapter 5, 'Responding to Alarms and Errors". 5. If the test continues to fail, follow normal escalation procedures.
	PASS	Although this test has passed, there may be related problems on other EI s used in connectivity to and from this EI. Software may have conducted tests on these other components and determined that this board was functioning properly and any problems were probably due to a problem with some other connectivity component. Check the error and alarm logs for problems with other EI circuit packs and resolve these errors. 1. Refer to other Expansion Interface circuit pack tests if the link is not functioning correctly.

EXP-PN (Expansion Port Network)

MO Name As It Appears in Alarm Log	Alarm Level	Initial System Technician Command to Run (a)	Full Name of MO
EXP-PN	MAJOR	display errors (a)	Expansion Port Network

a. Investigate errors against EXP-PN and EXP-INTF.

The EXP-PN maintenance object is responsible for overall maintenance of an Expansion Port Network. The focus of EPN maintenance is on the Expansion Interface circuit pack that is acting as the Expansion Archangel in an EPN. EXP-INTF covers maintenance of the Expansion Interface circuit pack itself, while EXP-PN covers a much broader area of activities and problems on an EPN. The alarming strategy for EXP-PN is fairly simple, and does not make use of any failure analysis routine for spawning maintenance actions. EXP-PN alarming is based on the availability of an EPN for service, and the EPN's response to various recovery actions.

When investigating alarms logged against an EPN, problems involving the Expansion Interface circuit pack acting as the Expansion Archangel, and problems that may involve loss of communication between the EPN and the SPE should be investigated. This could ultimately include fiber links (FIBER-LK), DS1C circuit packs (DS1C-BD), Switch Node Interface circuit packs (SNI-BD) and Switch Node Configurations (SN-CONF).

EPN Restarts

While not an exhaustive discussion of EPN recovery actions, this section describes at a high level the causes and effects of EPN restarts so that such events recorded in the Error Log can be understood.

EPN Warm Restarts

EPN Warm Restart (EPN Reset Level 1) is generally performed on an EPN when the recovery of that EPN can be accomplished in less than 30 seconds. When possible, Warm Restart minimizes the work required to reinitialize an EPN, and reduces the impact of an EPN failure by avoiding the longer and highly destructive EPN Cold Restart. The primary cause of EPN restarts is failure of the link from the SPE to the EPN due to a hardware fault in the link's path. For most hardware failures, this link, and thus the EPN, cannot be recovered until the failed hardware is replaced. However, several failures modes exist for which hardware redundancy allows the link to be recovered quickly. For instance, in a duplex SPE system, a Packet Interface circuit pack failure causes an SPE interchange, which will allow the link to be recovered quickly over the newly active Packet Interface. Or, on a Center Stage Switch, a link carried on one of the multiple fibers interconnecting the switch nodes may be rerouted over an alternate fiber.

If the EAL is recovered quickly, the EPN Warm Restart returns the EPN to service with minimal effects on user service. If the EAL cannot be recovered quickly, the EPN is taken out-of-service and an EPN Reset Level 2 (EPN Cold Restart) is required to return it to service.

EPN Cold Restarts

If the PPN to EPN link has failed and has not been recovered within 30 seconds, the EPN is taken out of service and can be brought back into service only with an EPN Reset Level 2 (EPN Cold Restart). Effects of an EPN Cold Restart include a reset of all circuit packs in the EPN, and the disconnection of all calls to or from the EPN. Calls with both endpoints within the EPN are dropped upon recovery.

EPN Restart Escalation

EPN restarts follow an escalation strategy controlled by maintenance software. Whenever a request for an EPN Reset Level 1 (EPN Warm Restart) is made, software checks to see if the restart should be escalated to an EPN Reset Level 2 (EPN Cold Restart). If any of the following are true, the restart is escalated:

- At least two level 1 restarts have occurred and less than two hours has elapsed since the last occurrence.
- Current EPN conditions do not allow a level 1 restart, such as when the EPN is out-of-service.
- Less than three minutes has elapsed since the last EPN Cold Restart, indicating that the EPN is unstable.

If two EPN Cold Restarts have been executed in less than an hour and the link is functional, but the EPN has not recovered to an in-service state, a MAJOR alarm is raised against EXP-PN, and the EPN is put into Emergency Transfer by system software. (Software can invoke EPN Emergency Transfer only when the link to the EPN is up. If the link is down, the hardware automatically invokes Emergency Transfer 1 minute after it detects a link failure).

Connectivity Alarming

When an EPN is out of service, a MAJOR EXP-PN alarm is raised against that EPN. An EPN can only be alarmed if it is out of service *and* the fiber link between the PPN and EPN is up. If the fiber link from the PPN to the Center Stage Switch is down (by removing it from administration, for example), all EPN s are lost but not alarmed, since they are not the cause of the problem. If, however, connectivity is restored and the EPN fails to recover, The EPN will be alarmed.

Hardware Error Log Entries and 'Test to Clear' Values

Expansion Port Network (EXP-PN) Error Log Entries					
Error Type	Aux Data	Associated Test	Alarm Level	On/Off Board	Test to Clear Value
1(a)	0	None	None		
257(b)	0	None	None		
513(c)	0	None	MAJOR	OFF	
769(d)	0	None	MAJOR	OFF	

Notes:

a. Error code 1 is an informational entry only, that indicates that an EPN Reset Level 1 (EPN Warm Restart) has been executed on this EPN.

b. Error code 257 is an informational entry only, that indicates that an EPN Reset Level 2 (EPN Cold Restart) has been executed on this EPN. This does not include restarts done at system initialization time.

c. Error type 513 is used to indicate that an Expansion Port Network is not in-service when it is expected to be. The value specified in the port field of the error log, will be the Port Network number of the affected Port Network. When this condition occurs, examine all System Link errors and EXP-INTF errors to aid in resolving the alarm (Examples of System Link errors are errors logged against PKT-INTF, EXP-INTF, SNI-BD, FIBER-LK, and PKT-BUS). Also check to make sure that all fiber connectivity matches that which has been administered for the system. This alarm and error will be resolved and removed from the logs only when the EPN comes back into service, or after fiber administration is changed to remove a fiber such that there is not connectivity from the PPN to this EPN.

d. This alarm will be raised when EPN maintenance has attempted to execute a Cold Restart recovery action two times, and both restarts failed. This will cause the EPN to be placed in Emergency Transfer. When this alarm is present, examine all EXP-INTF errors which, when cleared, may aid in resolving this alarm. Also check for any SNI-BD, SNI-PEER, FIBR-LK, SN-CONF, or DS1C-BD errors that may indicate a communication problem between the processor and the EPN. Make sure that the physical fiber connectivity matches that of system administration.

System Technician-Demanded Tests: Descriptions And Error Codes

EXP-PN does not support demand testing. A demand reset can be executed with the to perform a demand reset on an EPN by using the **reset port-network** P level **[1 | 2]** command. where P is the port network number and 1 or 2 specifies that reset level.

EPN Cold Restart (#955)

EPN Cold Restart, or EPN Reset Level 2, using the command **reset port-network P level 2** is used as a recovery mechanism for an EPN that has been taken out-of-service. It is executed as a result of EPN recovery escalation when a Warm Restart is not possible, or as a result of a system technician demanded EPN restart. Once an EPN has gone out-of-service, an EPN Cold Restart is required to bring it back into service.

is used as a recovery mechanism for an EPN that has been taken out-of-service. It is executed as a result of EPN recovery escalation when a Warm Restart is not possible, or as a result of a system technician demanded EPN restart. Once an EPN has gone out-of-service, an EPN Cold Restart is required to bring it back into service.

This is the most severe of the EPN restarts. Users of an EPN that experiences a Cold Restart will experience a service outage. For the first 30 seconds after the occurrence of an event that requires a restart, all stable calls will be preserved (although new calls will be denied). All calls terminating in the EPN are then dropped, and EPN users will not be able to place new phone calls during the restart. All EPN hardware will also be re-initialized during this restart. The restart will take no longer than 2 minutes with service being restored much quicker in a typical restart situation.

Table 9-171. TEST #955 EPN Cold Restart

Error Code	Test Result	Description/ Recommendation
2100	ABORT	Could not allocate the necessary system resources to execute this reset. 1. Retry the command at 1 minute intervals for a maximum of 3 retries. 2. If the command continues to abort follow normal escalation procedures.
1386	ABORT	The system link to this EPN is unavailable and cannot be used. This reset cannot be executed without the link being operational. 1. Refer to the System Link maintenance documentation and attempt to resolve the link problem.
2000	ABORT	Response to a request made in the internal portion of this reset procedure was not received within the allowable time period. 1. Retry the command at 1 minute intervals for a maximum of 5 retries. 2. If the reset procedure continues to abort follow normal escalation procedures.
2500	ABORT	Internal System Error 1. Retry the reset command at 1 minute intervals for a maximum of 3 retries. 2. If the reset procedure continues to abort follow normal escalation procedures.
	FAIL	Internal System Error 1. Retry the reset command at 1 minute intervals for a maximum of 3 retries. 2. If the reset procedure continues to fail follow normal escalation procedures.
	PASS	The EPN Cold Restart procedure completed successfully.

EPN Warm Restart (#956)

The EPN Warm Restart, or EPN Reset Level 1, using the command **reset port-network P level 1** is used to restart an EPN that has not been taken out-of-service. It is the least severe of the EPN restart levels and is used in an attempt to preserve the state of the system as much as possible, thereby reducing user impact to a minimum. This restart will be attempted on a EPN if it still in-service, or as a result of a system technician demanded EPN Warm Restart.

During an EPN Warm Restart, all calls will be preserved including voice, data, and packet calls. One an event has occurred that requires a warm restart, service will be fully restored within 35 seconds.

Table 9-172. TEST #956 EPN Warm Restart

Error Code	Test Result	Description/ Recommendation
2100	ABORT	Could not allocate the necessary system resources to execute this reset. 1. Retry the command at 1 minute intervals for a maximum of 3 retries. 2. If the command continues to abort follow normal escalation procedures.
1386	ABORT	The system link to this EPN is unavailable and cannot be used. This reset cannot be executed without the link being operational. 1. Refer to the System Link maintenance documentation and attempt to resolve the link problem.
1387	ABORT	This EPN is not in a state where it is possible to perform a Warm Restart on the EPN. It is necessary to perform an EPN Cold Restart (EPN Reset Level 2) because of one of the following reasons: ■ The EPN is in an out-of-service state. ■ Insufficient time has elapsed since the last EPN Cold Restart was performed on this EPN.

Continued on next page

Table 9-172. TEST #956 EPN Warm Restart — *Continued*

Error Code	Test Result	Description/ Recommendation
2000	ABORT	Response to a request made in the internal portion of this reset procedure was not received within the allowable time period. 1. Retry the command at 1 minute intervals for a maximum of 3 retries. 2. If the reset procedure continues to abort follow normal escalation procedures.
2500	ABORT	Internal System Error 1. Retry the reset command at 1 minute intervals for a maximum of 3 retries. 2. If the reset procedure continues to abort follow normal escalation procedures.
	FAIL	Internal System Error 1. Retry the reset command at 1 minute intervals for a maximum of 3 retries. 2. If the reset procedure continues to abort follow normal escalation procedures.
	PASS	The EPN Warm Restart procedure completed successfully.

EXT-DEV ADMIN? N (External Device Alarm)

MO Name As It Appears in Alarm Log	Alarm Level	Initial System Technician Command to Run (a)	Full Name of MO
EXT-DEV	MAJOR	test environment UU	External Device Alarm
EXT-DEV	MINOR	test environment UU	External Device Alarm

a. where UU is an appropriate cabinet number determined via the PORT field from the Alarm or Error Log.

NOTE:
Use this Maintenance Object when the *External Device Alarm Admin?* field on the *change system-parameters customer-options* form is set to (**n**).

Generic 3r SYSAM and EPN Maintenance circuit packs each have two sets of alarm leads which can be connected to external devices such as Uninterruptible Power Supplies (UPS) or adjuncts such as AUDIX. Certain conditions on the external device close the contacts on the alarm leads to notify the switch which in turn originates an EXT-DEV alarm. One set of leads generates a major alarm; the other set generates a minor alarm.

Hardware Error Log Entries and Test to Clear Values

Error Type	Aux Data	Associated Test	Alarm Level	On/Off Board	Test to Clear Value
0*	0	Any	Any	Any	test environment UU
1	Any	External Device Alarm Test (#120)	MAJOR MINOR†	OFF	test environment UU r 2

* Run the Short Test Sequence first. If all tests pass, run the Long Test Sequence. Refer to the appropriate test description and follow the recommended procedures.

† One port generates a MAJOR alarm; the other port generates a MINOR alarm.

System Technician-Demanded Tests: Descriptions and Error Codes

Always investigate tests in the order presented in the table below when inspecting errors in the system. By clearing error codes associated with the *Battery & Battery Charger Query Test,* you may also clear errors generated from other tests in the testing sequence.

Multicarrier Cabinet Tests			
Order of Investigation	**Short Test Sequence**	**Long Test Sequence**	**D/ND***
Battery & Battery Charger Query Test (#5) (a)	X	X	ND
AC Power Query Test (#78) (b)	X	X	ND
OLS Query Test (Carrier E) (#127) (c)	X	X	ND
OLS Query Test (Carrier D) (#127) (c)	X	X	ND
OLS Query Test (Carrier A) (#127) (c)	X	X	ND
OLS Query Test (Carrier B) (#127) (c)	X	X	ND
OLS Query Test (Carrier C) (#127) (c)	X	X	ND
Emergency Transfer Query Test (#124) (d)	X	X	ND
Cabinet Sensors Query Test (#122) (e)	X	X	ND
External Device Alarm Test (MAJOR port) (#120)	X	X	ND
External Device Alarm Test (MINOR port) (#120)	X	X	ND
Analog Ring Generator Initialization Test (#117) (f)	X	X	ND
Analog Ring Generator Query Test (#118) (f)	X	X	ND

* D = Destructive; ND = Nondestructive

Notes:

a. Refer to POWER (Battery & Battery Charger) section for a description of this test.

b. Refer to AC-POWER (AC Power) section for a description of this test.

c. Refer to CARR-POW (Carrier Port Power Supply) section for a description of this test.

d. Refer to EMG-XFER (Emergency Transfer) section for a description of this test.

e. Refer to CABINET (Cabinet Sensors) section for a description of this test.

f. Refer to RING-GEN (Analog Ring Generator) section for a description of this test.

Single Carrier Cabinet Tests

Order of Investigation	Short Test Sequence	Long Test Sequence	D/ND*
SCC Power Query Test (#79) (a)	X	X	ND
Emergency Transfer Query Test (#124) (b)	X	X	ND
External Device Alarm Test (MAJOR port) (#120)	X	X	ND
External Device Alarm Test (MINOR port) (#120)	X	X	ND
Analog Ring Generator Initialization Test (#117) (c)	X	X	ND
Analog Ring Generator Query Test (#118) (c)	X	X	ND

* D = Destructive; ND = Nondestructive

Notes:

a. Refer to DC-POWER (Single Carrier Cabinet Power) section for a description of this test.

b. Refer to EMG-XFER (Emergency Transfer) section for a description of this test.

c. Refer to RING-GEN (Analog Ring Generator) section for a description of this test.

External Device Alarm Test (#120)

The External Device Alarm Test requests the state of the External Device Alarm Leads from the SYSAM in a PPN and from the EPN Maintenance circuit pack in an EPN, and reports the results. The test has no effect on the external device itself.

Table 9-173. TEST #120 External Device Alarm Test

Error Code	Test Result	Description/ Recommendation
1000	ABORT	System resources required to run this test are not available. 1. Retry the command at 1 minute intervals a maximum of 5 time. 2. If the test continues to abort, escalate the problem.
2000	ABORT	Response to the test request was not received within the allowable time period. 1. Retry the command at 1 minute intervals a maximum of 5 time. 2. If the test continues to ABORT with error code 2000, check for system powering problems with the A carrier (PPN or EPN). Look for and resolve all AC-POWER and CARR-POW alarms in a multicarrier cabinet or DC-POWER alarms in a single carrier cabinet. Then, repeat the test. 3. If the test continues to ABORT with a 2000 error code, check for and resolve all SYSAM errors in a PPN or MAINT (EPN Maintenance circuit pack) errors in an EPN. Then, repeat the test. 4. If the test continues to ABORT with a 2000 error code, then escalate the problem.
2029 2319 2320 2500	ABORT	Internal System Error 1. Retry the command at 1 minute intervals a maximum of 5 times. 2. If the test continues to abort, escalate the problem.

Continued on next page

Table 9-173. TEST #120 External Device Alarm Test — *Continued*

Error Code	Test Result	Description/ Recommendation
ANY	FAIL	The External Device Alarm has been activated by the external device. 1. Clear the major alarm on the external device, and rerun the test. 2. If the test still fails, then disconnect the External Device Alarm Leads from the Maintenance circuit pack and rerun the test. 3. If the test still fails, then there is a problem with the Maintenance circuit pack that is reporting the alarm. This circuit pack should be replaced. There are failures that can occur on the SYSAM and EPN Maintenance circuit pack that *will not* be detected by their respective maintenance, but which will cause many environment tests to fail. If many environment tests are failing, the suspect circuit pack should be replaced and the test rerun. 4. If the test still fails, escalate the problem.
	PASS	If there is a problem with the external device, but the SYSAM or EPN Maintenance circuit pack connected to the device reports no alarm, then the External Device may not be properly reporting the problems or the External Device may not be properly connected to the External Device Alarm Leads.

EXT-DEV ADMIN? Y (External Device Alarm)

MO Name As It Appears in Alarm Log	Alarm Level	Initial System Technician Command to Run (a)	Full Name of MO
EXT-DEV	MAJOR	test eda-external-device-alrm physical location	External Device Alarm
EXT-DEV	MINOR	test eda-external-device-alrm physical location	External Device Alarm
EXT-DEV	WARNING	test eda-external-device-alrm physical location	External Device Alarm

a. where UU is an appropriate cabinet number determined via the PORT field from the Alarm or Error Log.

NOTE:
Use this Maintenance Object when the *External Device Alarm Admin?* field on the *change system-parameters customer-options* form is set to (**y**).

Generic 3r SYSAM and EPN Maintenance circuit packs each have two alarm ports which can be connected to external devices such as Uninterruptible Power Supplies (UPS) or adjuncts such as AUDIX.

Certain conditions on the external device close the contacts on the alarm leads to notify the switch which in turn originates an EXT-DEV alarm. One set of leads generates a major alarm; the other set generates a minor alarm.

The special locations UUmajor and UUminor are used to designate the major or minor maintenance board alarm connection for cabinet UU. The major/minor designation specifies the port, not the alarm level associated with the connection; *for example,* the “major” port can be administered as a major, minor, or warning alarm, and the “minor” port can be administered as a major, minor, or warning alarm. In addition Analog line ports can also be administered as external device alarms.

NOTE:
An unadministered maintenance board external device alarm port, that is sensing a contact closure will have an entry in the Error Log and in the Alarm Log. INADS will not receive warning alarms.

Hardware Error Log Entries and Test to Clear Values

Error Type	Aux Data	Associated Test	Alarm Level	On/Off Board	Test to Clear Value
0	0	Any	Any	Any	test eda-external-device-alrm physical location r 2
1	Any	External Device Alarm Test (#120)	Any	OFF	test eda-external-device-alrm physical location r 2

NOTE:
The loss of -48 volt power will prevent detection of an external device alarm. AC-POWER, CARR-POW, and DC-POWER alarms could indicate the loss of the external device alarm -48 volt power source. ALARM-PT alarms may also indicate a loss of power. When analog line ports are administered as analog line external device alarms loss of -48 volts will prevent detection of an external device alarm.

System Technician-Demanded Tests: Descriptions and Error Codes

Always investigate tests in the order presented in the table below when inspecting errors in the system. By clearing error codes associated with the *Battery & Battery Charger Query Test,* you may also clear errors generated from other tests in the testing sequence.

Order of Investigation	Short Test Sequence	Long Test Sequence	D/ND*
External Device Alarm Test (MAJOR port) (#120)	X	X	ND
External Device Alarm Test (MINOR port) (#120)	X	X	ND
External Device Alarm Test (WARNING port) (#120)	X	X	ND

* D = Destructive; ND = Nondestructive

External Device Alarm Test (#120)

The External Device Alarm Test requests the state of the External Device Alarm from a Maintenance circuit pack and reports the results. The test has no effect on the external device itself

Table 9-174. TEST #120 External Device Alarm Test

Error Code	Test Result	Description/ Recommendation
1000	ABORT	System resources required to run this test are not available. 1. Retry the command at 1 minute intervals a maximum of 5 time. 2. If the test continues to abort, escalate the problem.
1035	ABORT	The Expansion Port Network containing this equipment is not available Look for and resolve all Expansion Port Network problems with this cabinet.
2000	ABORT	Response to the test request was not received within the allowable time period. 1. Retry the command at 1 minute intervals a maximum of 5 time. 2. (Maintenance Board) If the test continues to ABORT with error code 2000, check for system powering problems with the A carrier. Look for and resolve all AC-POWER and CARR-POW alarms in a multicarrier cabinet or DC-POWER alarms in a single carrier cabinet. Then, repeat the test. 3. (Maintenance Board) If the test continues to ABORT with a 2000 error code, check for and resolve all maintenance circuit pack errors. Then, repeat the test. 4. If the test continues to ABORT with a 2000 error code, then escalate the problem.
2029 2100 2319 2320 2500	ABORT	Internal System Error 1. Retry the command at 1 minute intervals a maximum of 5 times. 2. If the test continues to abort, escalate the problem.

Continued on next page

Table 9-174. TEST #120 External Device Alarm Test — *Continued*

Error Code	Test Result	Description/ Recommendation
ANY	FAIL	The External Device Alarm has been activated by the external device. 1. Clear the major alarm on the external device, and rerun the test. 2. If the test still fails, then disconnect the External Device Alarm Leads from the Maintenance circuit pack and rerun the test. 3. If the test still fails, then there is a problem with the analog external device alarm port or the Maintenance circuit pack that is reporting the alarm. This circuit pack should be replaced. There are failures that can occur on the Maintenance circuit pack that *will not* be detected by their respective maintenance, but which will cause many environment tests to fail. If many environment tests are failing, the suspect circuit pack should be replaced and the test rerun. 4. If the test still fails, escalate the problem.
	PASS	If there is a problem with the external device, but the administered analog line external device alarm, or the administered Maintenance circuit pack connected to the device reports no alarm, then the External Device may not be properly reporting the problems or the External Device may not be properly connected to the External Device Alarm Leads.

Maintenance Object Repair Procedures
FIBER-LK

F

FIBER-LK (Fiber Link)

MO Name As It Appears in Alarm Log	Alarm Level	Initial System Technician Command to Run (a)	Full Name of MO
FIBER-LK	MAJOR	test fiber *F pnc* s	Fiber Link
FIBER-LK	MINOR	test fiber *F pnc* s	Fiber Link
FIBER-LK	WARNING	test fiber *F pnc* s	Fiber Link

a. F is the fiber link number; pnc is ‘‘a-pnc’’ or ‘‘b-pnc’’ (always ‘‘a-pnc’’ in simplex systems).

A fiber link consists of the endpoint boards that are connected via the optical fiber, the lightwave transceivers or metallic connections on the endpoint boards, and, if administered, the DS1 Converter (DS1C) complex that exists between the two fiber endpoints. The fiber endpoints are Expansion Interface (EI) circuit packs and/or Switch Node Interface (SNI) circuit packs.

Three types of fiber links exist in G3r systems:

EI-EI fiber	This type of fiber is an EI to EI connection and is only used in direct connect port network connectivity (PNC).
EI-SNI fiber	This type of fiber is an EI to SNI connection and is only used in Center Stage Switch (CSS) PNC.
SNI-SNI fiber	This type of fiber is an SNI to SNI connection and is only used in CSS PNC when two switch node carriers are connected in a two or three switch node configuration.

Fiber link errors and alarms are generated only on fibers that have at least one SNI endpoint. Fiber errors for fibers that have EI s as both endpoints are detected by the EI circuit pack, thus generating off-board EXP-INTF errors and alarms. Fiber errors and alarms on EI-SNI fiber links generate FIBER-LK and/or off-board EXP-INTF errors and alarms.

Fiber links are administered via **add fiber-link F** or **add fiber-link next**, where F is the fiber-link number. The 2 endpoints of the fiber are administered (EI and EI, EI and SNI, or SNI and SNI). In duplicated PNC configurations, both the a-pnc fiber-link and the b-pnc fiber-link are administered to the same fiber link number. The fiber links are designated by F P, where F is the fiber-link number and P is the pnc, a-pnc or b-pnc. In addition, a DS1 converter complex may be administered on the fiber link. In duplicated PNC configuration, the a-pnc and b-pnc DS1 converter complexes are administered to the same fiber-link number. DS1 facilities and parameters can be modified via **change fiber-link F P**.

An individual fiber link can be displayed with the **display fiber-link F** command. All fiber links can be listed via the **list fiber-link** command.

Figure 9-46 through Figure 9-50 illustrate fiber links in the various PNC configurations.

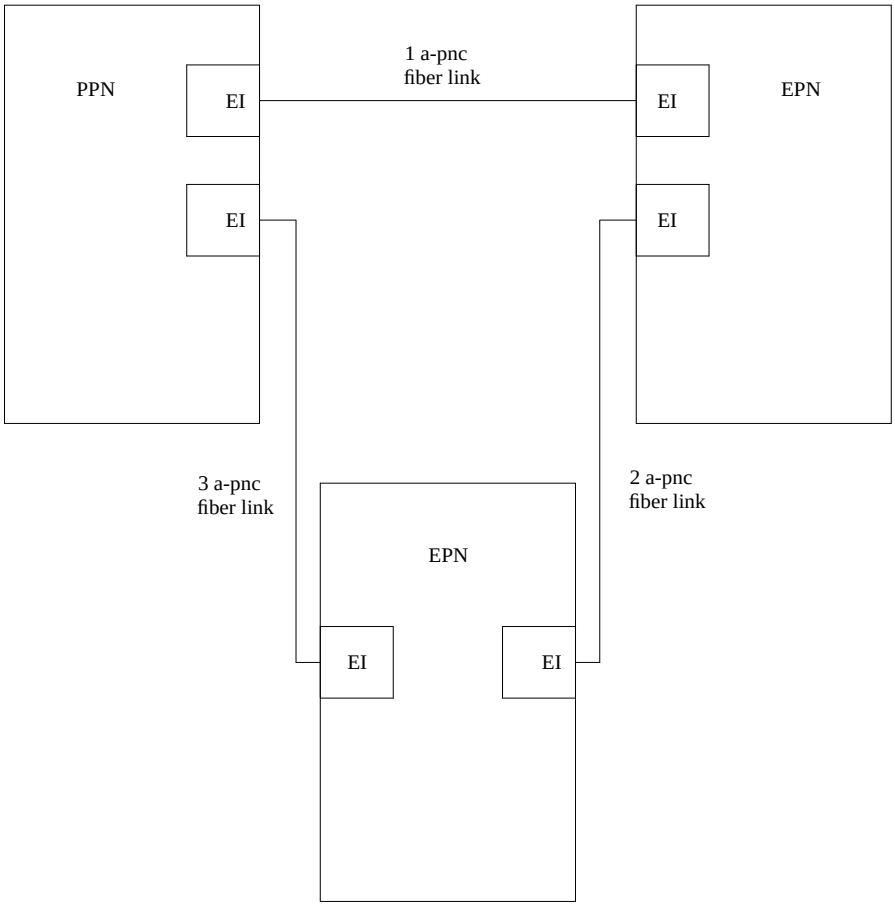

Figure 9-46. Direct Connect Configuration with Simplex PNC

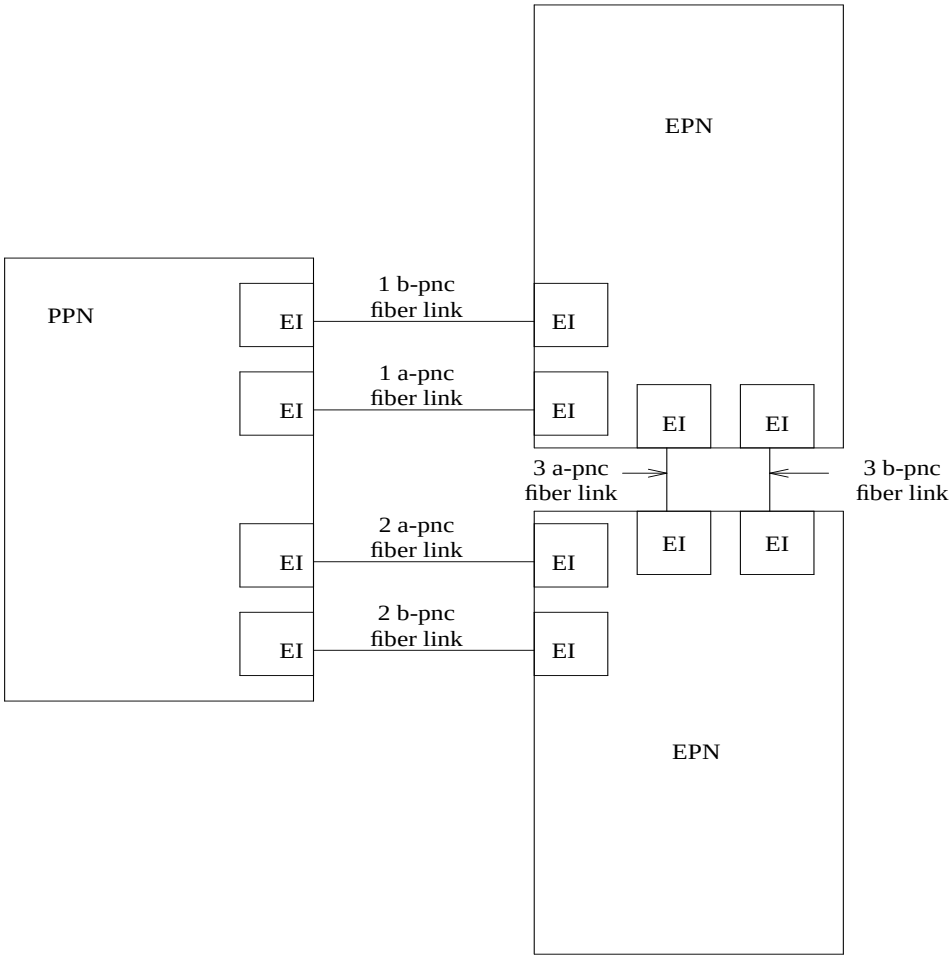

Figure 9-47. Direct Connect Configuration with Duplicated PNC

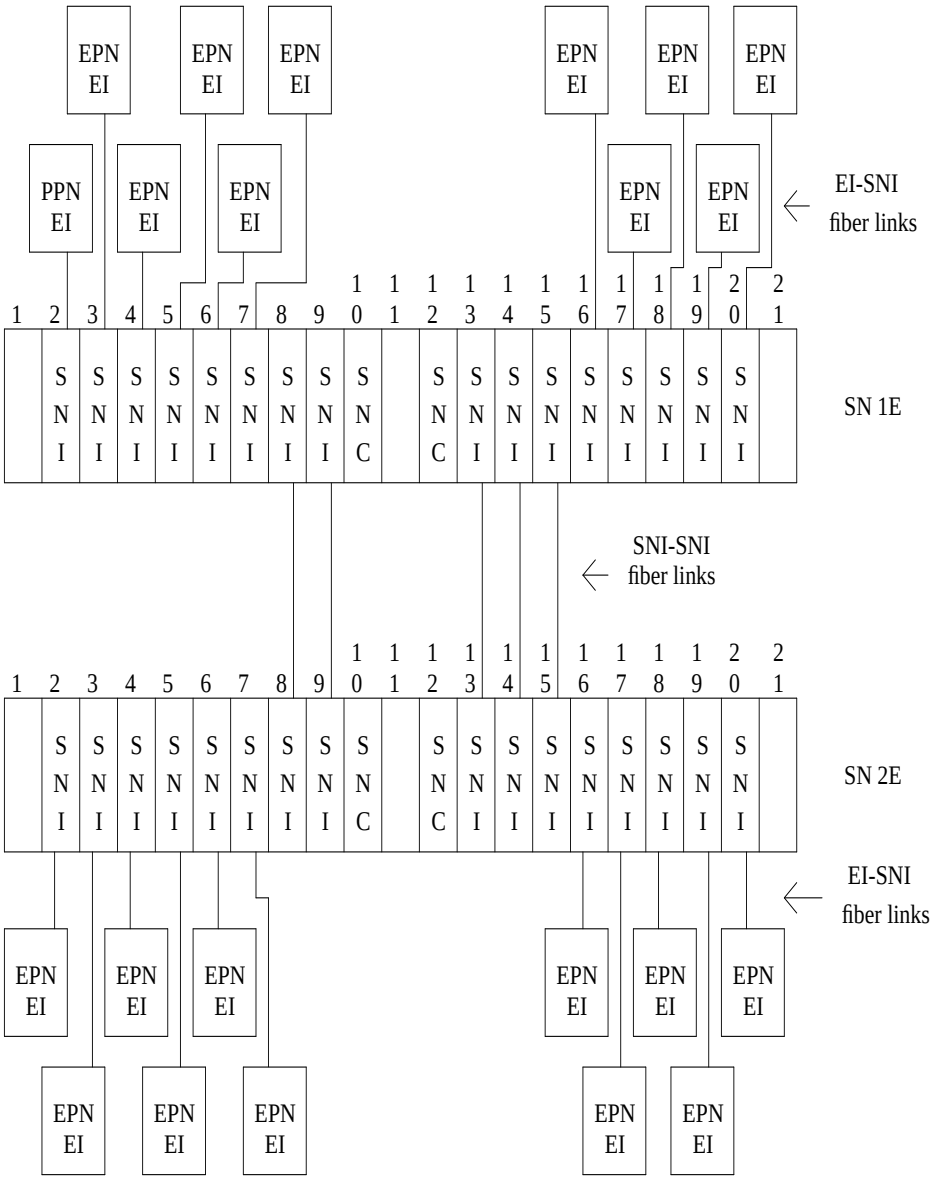

Figure 9-48. CSS Configuration with Simplex PNC and 2 Switch Node Carriers

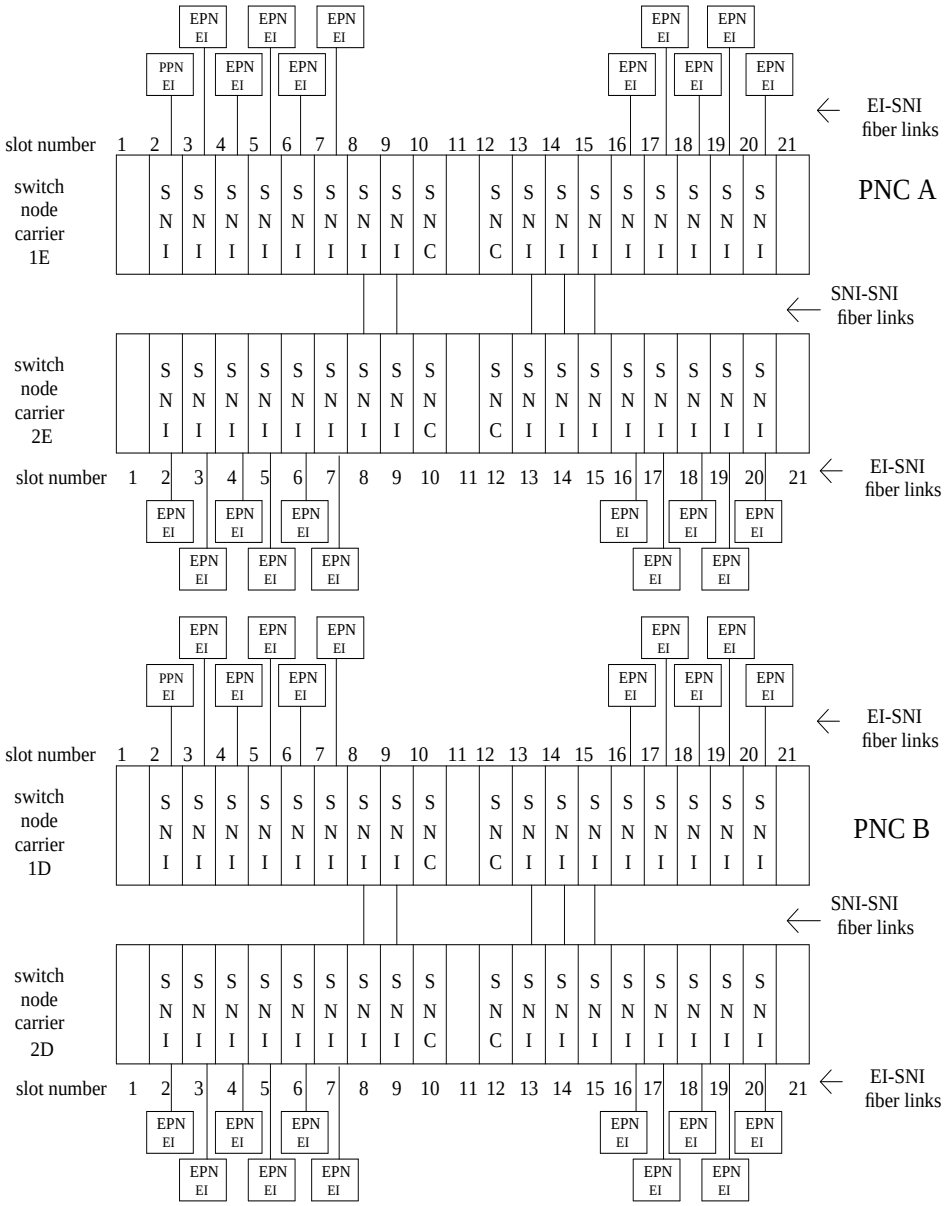

Figure 9-49. CSS Configuration with Duplicated PNC and 2 Switch Node Carriers

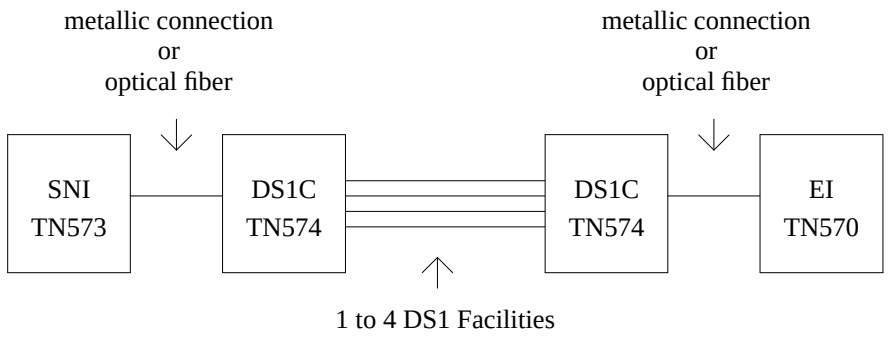

Figure 9-50. EI-SNI Fiber Link with a DS1 Converter Complex

The following terms are used in the error descriptions:

Control Path	The path between the two fiber endpoints that is necessary for the two endpoint circuit packs to communicate.
Circuit Path	The path between the two fiber endpoints that is necessary for circuit switched phone calls to work.
Neighbor	The circuit pack on the other end of the fiber.
Out of Frame	A circuit pack reports fiber out of frame if it cannot detect valid data coming from the fiber.
Packet Path	The path between the two fiber endpoints that is necessary for packet switched messages to be sent between the two fiber endpoints.

LEDs for Circuit Packs on a Fiber Link

The yellow LED s on the three types of boards, SNI (TN573), EI (TN570), and DS1 Converter (TN574), that may be a part of the fiber link can help in diagnosing problems with the fiber link. The yellow LED states are as follows. The flashing LED patterns take precedence over the active or standby LED patterns.

If both endpoints of a fiber link (EI and/or SNI) are flashing with a fiber out of frame pattern, a fast yellow LED pattern (0.1 sec on and 0.1 sec off), check the lightwave transceivers (if present). Both lightwave transceivers on the fiber link must be of the same type. The 9823a shortwave transceiver and the 9823b longwave transceiver must never be combined on the same fiber link because a fiber out of frame condition will exist. The 9823a lightwave transceiver should be used for distances up to 4900 feet and the 9823b lightwave transceiver should be used for distances up to 25,000 feet.

Switch Node Interface Yellow LED Flashing Codes

Condition	LED on	LED off
Fiber out of Frame	0.1 sec	0.1 sec
In frame, No Neighbor*	0.5 sec	0.5 sec
SNI active	Solid on	Never off
SNI standby	Never on	Solid off

* The fiber is in frame but no communication exists to the neighbor.

Expansion Interface Circuit Pack Yellow LED Flashing Codes

Condition	LED on	LED off
Fiber Out-of-Frame	0.1 sec	0.1 sec
(a) In frame-No Neighbor	0.5 sec	0.5 sec
(b) Expansion Interface Active	2 sec	0.2 sec
(c) Expansion Interface Active	Solid on	Never off
(d) Expansion Interface Standby	Never on	Solid off

Notes:

a. The fiber is in frame but no communication exists to the neighbor.

b. This is the normal state for an Active EPN Expansion Interface circuit pack that is also the bus master (Expansion Archangel) in the EPN.

c. This is the normal state for an Active Expansion Interface circuit pack that is not the bus master (Expansion Archangel) for an EPN. This applies only in the Direct Connect Configuration where the Expansion Interface circuit pack in an EPN is connected via a fiber link to an Expansion Interface circuit pack in the other EPN. This state also applies for an active Expansion Interface circuit pack located in the PPN.

d. This is the normal state for a Standby Expansion Interface circuit pack in both the PPN and EPN s.

For more details about how the Expansion Interface circuit pack error codes relate to the LED states, see the EXP-INTF section.

DS1C Yellow LED Flashing Codes

Condition	LED on	LED off
(a) Fiber out of Frame	0.1 sec	0.1 sec
(b) In frame, fiber channel is down	0.5 sec	0.5 sec
(c) In frame, DS1 channel down	1 sec	1 sec
(d) DS1C no response from SPE	2 sec	0.2 sec
DS1C active	Solid on	Never off
DS1C standby	Never on	Solid off

Notes:

a. A Fiber is Out Of Frame or a Fiber Loss of Signal condition exists.

b. DS1C/Fiber Endpoint communication is down.

c. The DS1 Channel is down between the two DS1C s in the DS1 Converter complex.

d. The SPE is not acknowledging messages from the DS1C circuit pack or the DS1C circuit pack does not have a processor route. This pattern indicates a probable software problem.

In addition to the traditional red, green, and yellow LED s, the DS1C circuit pack has four green LED s that indicate, for each DS1 facility, whether a receive signal is present for the DS1 facility.

Hardware Error Log Entries and Test to Clear Values

Table 9-175. Fiber Link Error Log Entries

Error Type	Aux Data	Associated Test	Alarm Level	On/Off Board	Test to Clear Value
0*	0	Any	Any	Any	test fiber-link F P r 1
1(b)	any	failure audit (#777) (a)	WAR/MIN/MAJ	OFF	test fiber-link F P r 1
18(c)	0	busyout fiber F P	WARNING	OFF	release fiber F P
257(d)	any	failure audit (#777) (a)	WAR/MIN/MAJ	OFF	test fiber-link F P r 1
513(e)	any	failure audit (#777) (a)	WAR/MIN/MAJ	OFF	test fiber-link F P r 1
769(f)	any	failure audit (#777) (a)	WAR/MIN/MAJ	OFF	test fiber-link F P r 1
1025(g)	any	failure audit (#777) (a)	WAR/MIN/MAJ	OFF	test fiber-link F P r 1
1281(h)	any	failure audit (#777) (a)	WAR/MIN/MAJ	OFF	test fiber-link F P r 1

* Run the Short Test Sequence first. If all tests pass, run the Long Test Sequence. Refer to the appropriate test description and follow the recommended procedures.

Notes:

a. The failure audit test (#777) should be run to confirm whether the error still exists.

b. This error indicates problem with the control path to the neighbor. See the steps that follow these notes.

c. This error indicates that the fiber link has been busied out via the **busyout fiber F P** command. To resolve this error, release the fiber link via the **release fiber F P** command.

d. This error indicates problem with the circuit path to the neighbor. See the steps that follow these notes.

e. This error indicates problem with the packet path to the neighbor. See the steps that follow these notes.

f. This error indicates problem with the control path from the neighbor. See the steps that follow these notes.

g. This error indicates problem with the circuit path from the neighbor. See the steps that follow these notes.

h. This error indicates problem with the packet path from the neighbor. See the steps that follow these notes.

For note b and notes d through h, perform the following steps:

1. Perform the "Fiber Fault Isolation Procedure" described in Chapter 5, "Responding to Alarms and Errors".
2. Enter **display errors** and if any of the slip errors listed below exist, follow the associated repair procedures in the SYNC section for slip errors.

Error Log Entries for Slip Errors

Circuit Pack Name	Error Log Name	Error Log Entry for Slips
DS1 Interface	DS1-BD	3073 to 3160
Expansion Interface	EXP-INTF	2305
Switch Node Interface	SNI-BD	1537
Tone-Clock	TDM-CLK	1025
UDS1 Interface	UDS1-BD	3073 to 3160

3. If the error persists, follow normal escalation procedures.

System Technician-Demanded Tests: Descriptions and Error Codes

Always investigate tests in the order presented in the table below when inspecting errors in the system. By clearing error codes associated with one test, you may also clear errors generated by other tests later in the sequence.

Tests Run for an EI-to-EI Fiber Link

Order of Investigation	Short Test Sequence	Long Test Sequence	Reset Fiber Sequence	D/ND*
EI Out-of-Frame Query Test(#238)	X	X		ND
EI Neighbor Query Test(#237)	X	X		ND
Fiber Link Reset Test(#768)			X	D

Tests Run for an EI-to-SNI Fiber Link

Order of Investigation	Short Test Sequence	Long Test Sequence	Reset Fiber Sequence	D/ND*
EI Out-of-Frame Query Test(#238)	X	X		ND
EI Neighbor Query Test(#237)	X	X		ND
Configuration Audit(#759)	X	X		ND
Failure Audit(#777)	X	X		ND
Fiber Out of Frame Query(#989)	X	X		ND
Destructive Facility Test(#757)		X		D
Off-Board Destructive Facility Test(#756)		X		D
Fiber Link Reset Test(#768)			X	D

* D = Destructive; ND = Nondestructive

Tests Run for an SNI-to-SNI Fiber Link

Order of Investigation	Short Test Sequence	Long Test Sequence	Reset Fiber Sequence	D/ND*
Configuration Audit(#759)	X	X		ND
Failure Audit(#777)	X	X		ND
Fiber Out of Frame Query(#989)	X	X		ND
Destructive Facility Test(#757)		X		D
Off-Board Destructive Facility Test (#756)		X		D
Fiber Link Reset Test(#768)			X	D

* D = Destructive; ND = Nondestructive

Expansion Interface Neighbor Query Test (#237)

This test is non-destructive.

The Expansion Interface Neighbor Query Test is a request to an Expansion Interface circuit pack to determine if it has established communication with the Expansion Interface or Switch Node Interface circuit pack on the opposite end of the fiber.

For EI-EI fiber links, this test is run on both Expansion Interface circuit pack endpoints of the fiber link.

Table 9-176. TEST #237 Expansion Interface Neighbor Query Test

Error Code	Test Result	Description/ Recommendation
1033	ABORT	The Expansion Interface circuit pack does not have a fiber link administered to it. There is not sufficient data to run test. Since the **test fiber-link** command was run, the expansion interface should be administered on a fiber link, therefore this must be a software problem. Follow normal escalation procedures.
2000	ABORT	Response to the test request was not received within the allowable time period. 1. Run the **test board UUCSS** test separately for each Expansion Interface endpoint on this fiber link and follow the procedures for this test in the EXP-INTF section.
2031	ABORT	The attempt to send the message to the Expansion Interface circuit pack, asking it who it's neighbor is, was not successful. 1. Run the **test board UUCSS** test separately for each Expansion Interface endpoint on this fiber link and follow the procedures for this test in the EXP-INTF section.
2100	ABORT	System resources required to run this test are not available. 1. Run the **test board UUCSS** test separately for each Expansion Interface endpoint on this fiber link and follow the procedures for this test in the EXP-INTF section.

Continued on next page

Table 9-176. TEST #237 Expansion Interface Neighbor Query Test — *Continued*

Error Code	Test Result	Description/ Recommendation
2500	ABORT	Internal System Error 1. Run the **test board UUCSS** test separately for each Expansion Interface endpoint on this fiber link and follow the procedures for this test in the EXP-INTF section.
1033	FAIL	The Expansion Interface circuit pack under test cannot make contact with opposite end Expansion Interface or Switch Node Interface circuit pack. 1. Run the **test board UUCSS** test separately for each Expansion Interface endpoint on this fiber link and follow the procedures for this test in the EXP-INTF section.
2027	FAIL	The Expansion Interface circuit pack has contact with the opposite Expansion Interface or Switch Node Interface circuit pack, but it is the incorrect Expansion Interface or Switch Node Interface circuit pack. 1. Run the **test board UUCSS** test separately for each Expansion Interface endpoint on this fiber link and follow the procedures for this test in the EXP-INTF section.
	PASS	The Expansion Interface circuit pack(s) have successfully established a link with the opposite Expansion Interface or Switch Node Interface circuit pack. 1. If the **status port-network** command still indicates that this link is down, it is possible that one or both of the Expansion Interface and/or Switch Node Interface circuit packs have been busied out. 2. If the link still does not come up, reset one or both Expansion Interface and/or Switch Node Interface circuit packs on the link.

Expansion Interface Fiber Out-of-Frame (FOOF) Query Test (#238)

This test is non-destructive.

This test is a request to an Expansion Interface circuit pack to determine if it is currently detecting the framing sequence on the incoming fiber data stream. If it cannot detect this framing signal, the Expansion Interface circuit pack will not be able to establish a link with the opposite Expansion Interface or Switch Node Interface circuit pack.

For EI-EI fiber links, this test is run on both Expansion Interface circuit pack endpoints of the fiber link.

Table 9-177. TEST #238 Expansion Interface Fiber Out-of-Frame Query Test

Error Code	Test Result	Description/ Recommendation
1033	ABORT	The Expansion Interface circuit pack does not have a fiber link administered to it. There is not sufficient data to run test. Since the **test fiber-link** command was run, the expansion interface should be administered on a fiber link, therefore this must be a software problem. Follow normal escalation procedures.
2000	ABORT	Response to the test request was not received within the allowable time period. 1. Run the **test board UUCSS** test separately for each Expansion Interface endpoint on this fiber link and follow the procedures for this test in the EXP-INTF section.
2100	ABORT	System resources required to run this test are not available. 1. Run the **test board UUCSS** test separately for each Expansion Interface endpoint on this fiber link and follow the procedures for this test in the EXP-INTF section.
2500	ABORT	Internal System Error 1. Run the **test board UUCSS** test separately for each Expansion Interface endpoint on this fiber link and follow the procedures for this test in the EXP-INTF section.

Continued on next page

Table 9-177. TEST #238 Expansion Interface Fiber Out-of-Frame Query Test — *Continued*

Error Code	Test Result	Description/ Recommendation
	FAIL	Expansion Interface circuit pack could not detect framing sequence. 1. Run the **test board UUCSS** test separately for each Expansion Interface endpoint on this fiber link and follow the procedures for this test in the EXP-INTF section.
	PASS	The Expansion Interface circuit pack(s) have detected the valid framing signal on the fiber. 1. Refer to errors from other Expansion Interface circuit packs, Switch Node Interface tests, or DS1 Converter tests (if present) if the link is still not functioning.

SNI Off-Board Destructive Facility Test (#756)

This test is destructive.

The SNI runs a destructive looparound of the off-board and on-board looparounds. This test returns the result of the off-board looparound, while test 757 returns the result of the on-board looparound.

For SNI-SNI fiber links, this test is run on both SNI circuit pack endpoints of the fiber link.

Table 9-178. TEST #756 SNI Off-Board Destructive Facility Test

Error Code	Test Result	Description/ Recommendation
1015	ABORT	The system will not allow this test to be run because the fiber link has not been busied out. Busy out the fiber link with **busyout fiber-link** F P. Repeat the **test fiber-link** F P **long** command.
2100	ABORT	Could not allocate the necessary system resources to run this test. 1. Retry the command at 1 minute intervals a maximum of 3 times. 2. If the test continues to abort, follow normal escalation procedures.
2300	ABORT	The downlink message necessary to run this test could not be sent. 1. Retry the command at 1 minute intervals a maximum of 3 times. 2. If the test continues to abort, follow normal escalation procedures.
2301	ABORT	The software timer could not be set before sending the downlink message necessary to run this test. 1. Retry the command at 1 minute intervals a maximum of 3 times. 2. If the test continues to abort, follow normal escalation procedures.

Continued on next page

Table 9-178. TEST #756 SNI Off-Board Destructive Facility Test — *Continued*

Error Code	Test Result	Description/ Recommendation
2304	ABORT	SNI firmware is not able to run the test. 1. Retry the command at 1 minute intervals a maximum of 3 times. 2. If the test continues to abort, follow normal escalation procedures.
2306	ABORT	An SNI circuit pack on the fiber link is not responding to test requests sent by software. 1. Run the **test led switch-node** for the switch node(s) that the SNI (s) reside in to verify whether the LED s on the board(s) light. Follow the steps below for the SNI (s) from step 1 that had no LED s light. 2. If the LED s on the other boards in the carrier light, but the LED s on this board do not light, run test 760 via **test board UUCSS l** for the active SNC in this carrier. Wait 5 minutes and then try step 1 one more time. If the LED s on this board still do not light, replace this board. Replacing an SNI may be service interrupting. Refer to the SNI-BD section for the procedure for replacing an SNI. 3. If none of the LED s light for the boards in the same carrier as this board, fix any problems associated with the connectivity of this carrier to the SPE. Check **list fibers** to determine the fiber connections to this carrier. Check the LED s on all SNI s and EI s and fix any fiber problems. Enter **display errors** and follow the associated repair procedures for any EXP-INTF error entries associated with the PPN. Also, follow the associated repair procedures for any SYNC, SNI-BD, SNC-BD, FIBER-LK, or SNI-PEER error entries. 4. If the test continues to abort, follow normal escalation procedures.

Continued on next page

Table 9-178. TEST #756 SNI Off-Board Destructive Facility Test — *Continued*

Error Code	Test Result	Description/ Recommendation
1415	ABORT	The lightwave transceiver is not present for endpoint 1 of the fiber link (**list fiber-link** can be used to display fiber link endpoints). 1. If a lightwave transceiver is not supposed to be present, do nothing. For example, an SNI connected to a DS1C circuit pack or an SNI with a metallic connection does not have a lightwave transceiver. This test can only be run when a lightwave transceiver exists. 2. Otherwise, continue with the following steps. 3. Check the lightwave transceiver connections. 4. Replace the lightwave transceiver. If a fiber out of frame condition exists and lightwave transceivers are used, check that the lightwave transceivers are of the same type, i.e., both are 9823a or both are 9823b. If they are not the same type, replace one of the lightwave transceivers (9823a is used for distances up to 4900 feet and 9823b is used for distances up to 25,000 feet). 5. Replace the SNI circuit pack. 6. If the test continues to abort, follow normal escalation procedures.

Continued on next page

Table 9-178. TEST #756 SNI Off-Board Destructive Facility Test — *Continued*

Error Code	Test Result	Description/ Recommendation
1416	ABORT	The lightwave transceiver is not present for endpoint 2 of the fiber link (**list fiber-link** can be used to display fiber link endpoints). 1. If a lightwave transceiver is not supposed to be present, do nothing. For example, an SNI connected to a DS1C circuit pack or an SNI with a metallic connection does not have a lightwave transceiver. This test can only be run when a lightwave transceiver exists. 2. Otherwise, continue with the following steps. 3. Check the lightwave transceiver connections. 4. Replace the lightwave transceiver. If a fiber out of frame condition exists and lightwave transceivers are used, check that the lightwave transceivers are of the same type, i.e. both are 9823a or both are 9823b. If they are not the same type, replace one of the lightwave transceivers (9823a is used for distances up to 4900 feet and 9823b is used for distances up to 25,000 feet). 5. Replace the SNI circuit pack. 6. If the test continues to abort, follow normal escalation procedures.

Continued on next page

Table 9-178. TEST #756 SNI Off-Board Destructive Facility Test — *Continued*

Error Code	Test Result	Description/ Recommendation
127	FAIL	The data is not correctly looped around on endpoint 1 of the fiber link (**list fiber-link** can be used to display fiber link endpoints). 1. Check the lightwave transceiver. 2. Replace the lightwave transceiver. If a fiber out of frame condition exists and lightwave transceivers are used, check that the lightwave transceivers are of the same type, i.e. both are 9823a or both are 9823b. If they are not the same type, replace one of the lightwave transceivers (9823a is used for distances up to 4900 feet and 9823b is used for distances up to 25,000 feet). 3. Replace the SNI circuit pack. 4. If the test continues to fail, follow normal escalation procedures.
227	FAIL	The data is not correctly looped around on endpoint 2 of the fiber link (**list fiber-link** can be used to display fiber link endpoints). 1. Check the lightwave transceiver. 2. Replace the lightwave transceiver. If a fiber out of frame condition exists and lightwave transceivers are used, check that the lightwave transceivers are of the same type, i.e. both are 9823a or both are 9823b. If they are not the same type, replace one of the lightwave transceivers (9823a is used for distances up to 4900 feet and 9823b is used for distances up to 25,000 feet). 3. Replace the SNI circuit pack. 4. If the test continues to fail, follow normal escalation procedures.
	PASS	No problems associated with this test are detected on the SNI (s).

SNI Destructive Facility Test (#757)

This test is destructive.

The SNI runs a destructive looparound of the off-board and on-board loopar ounds. This test returns the result of the on-board looparound, while test 756 returns the result of the off-board looparound.

For SNI-SNI fiber links, this test is run on both SNI circuit pack endpoints of the fiber link.

Table 9-179. TEST #757 SNI Destructive Facility Test

Error Code	Test Result	Description/ Recommendation
1015	ABORT	The system will not allow this test to be run because the fiber link has not been busied out. Busy out the fiber link with **busyout fiber-link** F P. Repeat the **test fiber-link** F P **long** command.
2100	ABORT	Could not allocate the necessary system resources to run this test. 1. Retry the command at 1 minute intervals a maximum of 3 times. 2. If the test continues to abort, follow normal escalation procedures.
2300	ABORT	The downlink message necessary to run this test could not be sent. 1. Retry the command at 1 minute intervals a maximum of 3 times. 2. If the test continues to abort, follow normal escalation procedures.
2301	ABORT	The software timer could not be set before sending the downlink message necessary to run this test. 1. Retry the command at 1 minute intervals a maximum of 3 times. 2. If the test continues to abort, follow normal escalation procedures.

Continued on next page

Table 9-179. TEST #757 SNI Destructive Facility Test — *Continued*

Error Code	Test Result	Description/ Recommendation
2304	ABORT	SNI firmware is not able to run the test. 1. Retry the command at 1 minute intervals a maximum of 3 times. 2. If the test continues to abort, follow normal escalation procedures.
2306	ABORT	An SNI circuit pack on the fiber link is not responding to test requests sent by software. 1. Run the **test led switch-node** for the switch node(s) that the SNI (s) reside in to verify whether the LED s on the board(s) light. Follow the steps below for the SNI (s) from step 1 that had no LED s light. 2. If the LED s on the other boards in the carrier light, but the LED s on this board do not light, run test 760 via **test board UUCSS l** for the active SNC in this carrier. Wait 5 minutes and then try step 1 one more time. If the LED s on this board still do not light, replace this board. Replacing an SNI may be service interrupting. Refer to the SNI-BD section for the procedure for replacing an SNI. 3. If none of the LED s light for the boards in the same carrier as this board, fix any problems associated with the connectivity of this carrier to the SPE. Check **list fibers** to determine the fiber connections to this carrier. Check the LED s on all SNI s and EI s and fix any fiber problems. Enter **display errors** and follow the associated repair procedures for any EXP-INTF error entries associated with the PPN. Also, follow the associated repair procedures for any SYNC, SNI-BD, SNC-BD, FIBER-LK, or SNI-PEER error entries. 4. If the test continues to abort, follow normal escalation procedures.

Continued on next page

Table 9-179. TEST #757 SNI Destructive Facility Test — *Continued*

Error Code	Test Result	Description/ Recommendation
127	FAIL	The data is not correctly looped around on endpoint 1 of the fiber link (**list fiber-link** can be used to display fiber link endpoints). 1. Replace the SNI circuit pack. 2. If the test continues to fail, follow normal escalation procedures.
227	FAIL	The data is not correctly looped around on endpoint 2 of the fiber link (**list fiber-link** can be used to display fiber link endpoints). 1. Replace the SNI circuit pack. 2. If the test continues to fail, follow normal escalation procedures.
	PASS	No problems associated with this test are detected on the SNI (s).

Configuration Audit (#759)

This test is non-destructive.

This test is run via the **test board short** or **test board long** command for SNI circuit packs or via **test fiber-link** for fiber links with SNI endpoint(s).

This test queries the SNI for SNC s in the same switch node carrier, SNI peers, DS1C s, and EI or SNI neighbors that the SNI can communicate with and compares this data to the administered data.

Failures of this test cause entries in the error and alarm logs against Switch Node Configuration (SN-CONF) with the board location of the SNI.

This test is unable to detect the case where an SNI is connected to the same type of board (EI or SNI) as administered but located in a different cabinet but the same carrier and same slot as the administered fiber endpoint. The administered fiber endpoint can be viewed with the **list fiber-link** command. This test can only detect if the fiber endpoint connected to the SNI is in a different carrier, slot location than the administered fiber endpoint.

If the SNI is connected to the same type of fiber endpoint as the administered fiber endpoint, but the location is the same as administered except for the cabinet, all phone calls will not work correctly; some phone calls will not go through and some phone calls will ring the wrong phone.

The **test led** command can be used in this case to check connectivity.

1. First, run the **test led port-network** command on each administered port network and verify that the LED s on the correct port network are lit.
2. If not, check that the fiber connections to the port network are consistent with the administered fibers (**list fiber-link**) that does not light the LED s as expected.
3. Then run the test led switch-node command on each administered switch node carrier and verify that the LED s on the correct switch node carrier are lit.
4. If not, check the connectivity to the switch node carrier that does not light the LED s as expected.

Table 9-180. TEST #759 Configuration Audit

Error Code	Test Result	Description/ Recommendation
2100	ABORT	Could not allocate the necessary system resources to run this test for endpoint 1 of the fiber link (**list fiber-link** can be used to display fiber link endpoints). If this fiber link has two SNI endpoints, run the **test board UUCSS** test separately for each SNI and follow the repair procedures in section SNI-BD. Otherwise: 1. Retry the command at 1 minute intervals a maximum of 3 times. 2. If the test continues to abort, follow normal escalation procedures.
2300	ABORT	The downlink message necessary to run this test could not be sent. If this fiber link has two SNI endpoints, run the **test board UUCSS** test separately for each SNI and follow the repair procedures in section SNI-BD (**list fiber-link** can be used to display fiber link endpoints). Otherwise: 1. Retry the command at 1 minute intervals a maximum of 3 times. 2. If the test continues to abort, follow normal escalation procedures.
2301	ABORT	The software timer could not be set before sending the downlink message necessary to run this test. If this fiber link has two SNI endpoints, run the **test board UUCSS** test separately for each SNI and follow the repair procedures in section SNI-BD (**list fiber-link** can be used to display fiber link endpoints). Otherwise: 1. Retry the command at 1 minute intervals a maximum of 3 times. 2. If the test continues to abort, follow normal escalation procedures.

Continued on next page

Table 9-180. TEST #759 Configuration Audit — *Continued*

Error Code	Test Result	Description/ Recommendation
2306	ABORT	The SNI circuit pack(s) are not responding to test requests sent by software. 1. Run the **test led switch-node** for the switch node carrier(s) that the SNI (s) reside in to verify whether the LED s on the board(s) light. Follow the steps below for the SNI (s) from step 1 that had no LED s light. 2. If the LED s on the other boards in the carrier light, but the LED s on this board do not light, run test 760 via **test board UUCSS** for the active SNC in this carrier. Wait 5 minutes and then try step 1 one more time. If the LED s on this board still do not light, replace this board. Replacing an SNI may be service interrupting. Refer to the SNI-BD section for the procedure for replacing an SNI. 3. If none of the LED s light for the boards in the same carrier as this board, fix any problems associated with the connectivity of this carrier to the SPE. Check **list fibers** to determine the fiber connections to this carrier. Check the LED s on all SNI s and EI s and fix any fiber problems. Enter **display errors** and follow the associated repair procedures for any EXP-INTF error entries associated with the PPN. Also, follow the associated repair procedures for any SYNC, SNI-BD, SNC-BD, FIBER-LK, or SNI-PEER error entries. 4. If the test continues to abort, follow normal escalation procedures.
2500	ABORT	Internal System Error If this fiber link has two SNI endpoints, run the **test board UUCSS** test separately for each SNI and follow the repair procedures in section SNI-BD (**list fiber-link** can be used to display fiber link endpoints). Otherwise: 1. Retry the command at 1 minute intervals a maximum of 3 times. 2. If the test continues to abort, follow normal escalation procedures.

Continued on next page

Table 9-180. TEST #759 Configuration Audit — *Continued*

Error Code	Test Result	Description/ Recommendation
102	FAIL	The SNI circuit pack (endpoint 1) cannot communicate with the equipped SNI in slot 2 (**list fiber-link** can be used to display fiber link endpoints). 1. Perform the "Fiber Fault Isolation Procedure" described in Chapter 5, "Responding to Alarms and Errors". 2. If the SNI being tested has SNI-PEER error type 1, replace the SNI being tested. Replacing an SNI may be service interrupting. Refer to the SNI-BD section for the procedure for replacing an SNI. To view SNI-PEER errors, use the **display errors** command with category PNC-PEER. Retry the command. 3. If the SNI being tested has SNI-PEER error type 1, replace the SNI in slot 2. Replacing an SNI may be service interrupting. Refer to the SNI-BD section for the procedure for replacing an SNI. Retry the command. 4. If the test continues to fail, follow normal escalation procedures.
103	FAIL	The SNI circuit pack (endpoint 1) cannot communicate with the equipped SNI in slot 3 (**list fiber-link** can be used to display fiber link endpoints). 1. Perform the "Fiber Fault Isolation Procedure" described in Chapter 5, "Responding to Alarms and Errors". 2. If the SNI being tested has SNI-PEER error type 257, replace the SNI being tested. Replacing an SNI may be service interrupting. Refer to the SNI-BD section for the procedure for replacing an SNI. To view SNI-PEER errors, use the **display errors** command with category PNC-PEER. Retry the command. 3. Replacing an SNI may be service interrupting. Refer to the SNI-BD section for the procedure for replacing an SNI. Retry the command. 4. If the test continues to fail, follow normal escalation procedures.

Continued on next page

Table 9-180. TEST #759 Configuration Audit — *Continued*

Error Code	Test Result	Description/ Recommendation
104	FAIL	The SNI circuit pack (endpoint 1) cannot communicate with the equipped SNI in slot 4 (**list fiber-link** can be used to display fiber link endpoints). 1. Perform the "Fiber Fault Isolation Procedure" described in Chapter 5, "Responding to Alarms and Errors". 2. If the SNI being tested has SNI-PEER error type 513, replace the SNI being tested. Replacing an SNI may be service interrupting. Refer to the SNI-BD section for the procedure for replacing an SNI. To view SNI-PEER errors, use the **display errors** command with category PNC-PEER. Retry the command. 3. If the SNI being tested has SNI-PEER error type 513, replace the SNI in slot 4. Replacing an SNI may be service interrupting. Refer to the SNI-BD section for the procedure for replacing an SNI. Retry the command. 4. If the test continues to fail, follow normal escalation procedures.

Continued on next page

Table 9-180. TEST #759 Configuration Audit — *Continued*

Error Code	Test Result	Description/ Recommendation
105	FAIL	The SNI circuit pack (endpoint 1) cannot communicate with the equipped SNI in slot 5 (**list fiber-link** can be used to display fiber link endpoints). 1. Perform the "Fiber Fault Isolation Procedure" described in Chapter 5, "Responding to Alarms and Errors". 2. If the SNI being tested has SNI-PEER error type 769, replace the SNI being tested. Replacing an SNI may be service interrupting. Refer to the SNI-BD section for the procedure for replacing an SNI. To view SNI-PEER errors, use the **display errors** command with category PNC-PEER. Retry the command. 3. If the SNI being tested has SNI-PEER error type 769, replace the SNI in slot 5. Replacing an SNI may be service interrupting. Refer to the SNI-BD section for the procedure for replacing an SNI. Retry the command. 4. If the test continues to fail, follow normal escalation procedures.

Continued on next page

Table 9-180. TEST #759 Configuration Audit — *Continued*

Error Code	Test Result	Description/ Recommendation
106	FAIL	The SNI circuit pack (endpoint 1) cannot communicate with the equipped SNI in slot 6 (**list fiber-link** can be used to display fiber link endpoints). 1. Perform the "Fiber Fault Isolation Procedure" described in Chapter 5, "Responding to Alarms and Errors". 2. If the SNI being tested has SNI-PEER error type 1025, replace the SNI being tested. Replacing an SNI may be service interrupting. Refer to the SNI-BD section for the procedure for replacing an SNI. To view SNI-PEER errors, use the **display errors** command with category PNC-PEER. Retry the command. 3. If the SNI being tested has SNI-PEER error type 1025, replace the SNI in slot 6. Replacing an SNI may be service interrupting. Refer to the SNI-BD section for the procedure for replacing an SNI. Retry the command. 4. If the test continues to fail, follow normal escalation procedures.

Continued on next page

Table 9-180. TEST #759 Configuration Audit — *Continued*

Error Code	Test Result	Description/ Recommendation
107	FAIL	The SNI circuit pack (endpoint 1) cannot communicate with the equipped SNI in slot 7 (**list fiber-link** can be used to display fiber link endpoints). 1. Perform the "Fiber Fault Isolation Procedure" described in Chapter 5, "Responding to Alarms and Errors". 2. If the SNI being tested has SNI-PEER error type 1281, replace the SNI being tested. Replacing an SNI may be service interrupting. Refer to the SNI-BD section for the procedure for replacing an SNI. To view SNI-PEER errors, use the **display errors** command with category PNC-PEER. Retry the command. 3. If the SNI being tested has SNI-PEER error type 1281, replace the SNI in slot 7. Replacing an SNI may be service interrupting. Refer to the SNI-BD section for the procedure for replacing an SNI. Retry the command. 4. If the test continues to fail, follow normal escalation procedures.

Continued on next page

Table 9-180. TEST #759 Configuration Audit — *Continued*

Error Code	Test Result	Description/ Recommendation
108	FAIL	The SNI circuit pack (endpoint 1) cannot communicate with the equipped SNI in slot 8 (**list fiber-link** can be used to display fiber link endpoints). 1. Perform the "Fiber Fault Isolation Procedure" described in Chapter 5, "Responding to Alarms and Errors". 2. If the SNI being tested has SNI-PEER error type 1537, replace the SNI being tested. Replacing an SNI may be service interrupting. Refer to the SNI-BD section for the procedure for replacing an SNI. To view SNI-PEER errors, use the **display errors** command with category PNC-PEER. Retry the command. 3. If the SNI being tested has SNI-PEER error type 1537, replace the SNI in slot 8. Replacing an SNI may be service interrupting. Refer to the SNI-BD section for the procedure for replacing an SNI. Retry the command. 4. If the test continues to fail, follow normal escalation procedures.

Continued on next page

Table 9-180. TEST #759 Configuration Audit — *Continued*

Error Code	Test Result	Description/ Recommendation
109	FAIL	The SNI circuit pack (endpoint 1) cannot communicate with the equipped SNI in slot 9 (**list fiber-link** can be used to display fiber link endpoints). 1. Perform the "Fiber Fault Isolation Procedure" described in Chapter 5, "Responding to Alarms and Errors". 2. If the SNI being tested has SNI-PEER error type 1793, replace the SNI being tested. Replacing an SNI may be service interrupting. Refer to the SNI-BD section for the procedure for replacing an SNI. To view SNI-PEER errors, use the **display errors** command with category PNC-PEER. Retry the command. 3. If the SNI being tested has SNI-PEER error type 1793, replace the SNI in slot 9. Replacing an SNI may be service interrupting. Refer to the SNI-BD section for the procedure for replacing an SNI. Retry the command. 4. If the test continues to fail, follow normal escalation procedures.

Continued on next page

Table 9-180. TEST #759 Configuration Audit — *Continued*

Error Code	Test Result	Description/ Recommendation
112	FAIL	The SNI circuit pack (endpoint 1) cannot communicate with the active SNC (**list fiber-link** can be used to display fiber link endpoints). 1. Check the error log for other SNI circuit packs in the same carrier with a 257 SNI-BD error. Use **display errors** with category PNC to view SNI-BD errors. If other SNI circuit packs in the same switch node carrier have error 257, then replace the active SNC in this switch node carrier. Replacing an SNC may be service interrupting. Refer to the SNC-BD section for the procedure for replacing an SNC. 2. Replace this SNI. Replacing an SNI may be service interrupting. Refer to the SNI-BD section for the procedure for replacing an SNI. 3. Replace the active SNC in the same switch node carrier. Replacing an SNC may be service interrupting. Refer to the SNC-BD section for the procedure for replacing an SNC. 4. If this test still fails, follow normal escalation procedures.

Continued on next page

Table 9-180. TEST #759 Configuration Audit — *Continued*

Error Code	Test Result	Description/ Recommendation
113	FAIL	The SNI circuit pack (endpoint 1) cannot communicate with the equipped SNI in slot 13 (**list fiber-link** can be used to display fiber link endpoints). 1. Perform the "Fiber Fault Isolation Procedure" described in Chapter 5, "Responding to Alarms and Errors". 2. If the SNI being tested has SNI-PEER error type 2049, replace the SNI being tested. Replacing an SNI may be service interrupting. Refer to the SNI-BD section for the procedure for replacing an SNI. To view SNI-PEER errors, use the **display errors** command with category PNC-PEER. Retry the command. 3. If the SNI being tested has SNI-PEER error type 2049, replace the SNI in slot 13. Replacing an SNI may be service interrupting. Refer to the SNI-BD section for the procedure for replacing an SNI. Retry the command. 4. If the test continues to fail, follow normal escalation procedures.

Continued on next page

Table 9-180. TEST #759 Configuration Audit — *Continued*

Error Code	Test Result	Description/ Recommendation
114	FAIL	The SNI circuit pack (endpoint 1) cannot communicate with the equipped SNI in slot 14 (**list fiber-link** can be used to display fiber link endpoints). 1. Perform the "Fiber Fault Isolation Procedure" described in Chapter 5, "Responding to Alarms and Errors". 2. If the SNI being tested has SNI-PEER error type 2305, replace the SNI being tested. Replacing an SNI may be service interrupting. Refer to the SNI-BD section for the procedure for replacing an SNI. To view SNI-PEER errors, use the **display errors** command with category PNC-PEER. Retry the command. 3. If the SNI being tested has SNI-PEER error type 2305, replace the SNI in slot 14. Replacing an SNI may be service interrupting. Refer to the SNI-BD section for the procedure for replacing an SNI. Retry the command. 4. If the test continues to fail, follow normal escalation procedures.

Continued on next page

Table 9-180. TEST #759 Configuration Audit — *Continued*

Error Code	Test Result	Description/ Recommendation
115	FAIL	The SNI circuit pack (endpoint 1) cannot communicate with the equipped SNI in slot 15 (**list fiber-link** can be used to display fiber link endpoints). 1. Perform the "Fiber Fault Isolation Procedure" described in Chapter 5, "Responding to Alarms and Errors". 2. If the SNI being tested has SNI-PEER error type 2561, replace the SNI being tested. Replacing an SNI may be service interrupting. Refer to the SNI-BD section for the procedure for replacing an SNI. To view SNI-PEER errors, use the **display errors** command with category PNC-PEER. Retry the command. 3. If the SNI being tested has SNI-PEER error type 2561, replace the SNI in slot 15. Replacing an SNI may be service interrupting. Refer to the SNI-BD section for the procedure for replacing an SNI. Retry the command. 4. If the test continues to fail, follow normal escalation procedures.

Continued on next page

Table 9-180. TEST #759 Configuration Audit — *Continued*

Error Code	Test Result	Description/ Recommendation
116	FAIL	The SNI circuit pack (endpoint 1) cannot communicate with the equipped SNI in slot 16 (**list fiber-link** can be used to display fiber link endpoints). 1. Perform the "Fiber Fault Isolation Procedure" described in Chapter 5, "Responding to Alarms and Errors". 2. If the SNI being tested has SNI-PEER error type 2817, replace the SNI being tested. Replacing an SNI may be service interrupting. Refer to the SNI-BD section for the procedure for replacing an SNI. To view SNI-PEER errors, use the **display errors** command with category PNC-PEER. Retry the command. 3. If the SNI being tested has SNI-PEER error type 2817, replace the SNI in slot 16. Replacing an SNI may be service interrupting. Refer to the SNI-BD section for the procedure for replacing an SNI. Retry the command. 4. If the test continues to fail, follow normal escalation procedures.

Continued on next page

Table 9-180. TEST #759 Configuration Audit — *Continued*

Error Code	Test Result	Description/ Recommendation
117	FAIL	The SNI circuit pack (endpoint 1) cannot communicate with the equipped SNI in slot 17 (**list fiber-link** can be used to display fiber link endpoints). 1. Perform the "Fiber Fault Isolation Procedure" described in Chapter 5, "Responding to Alarms and Errors". 2. If the SNI being tested has SNI-PEER error type 3073, replace the SNI being tested. Replacing an SNI may be service interrupting. Refer to the SNI-BD section for the procedure for replacing an SNI. To view SNI-PEER errors, use the **display errors** command with category PNC-PEER. Retry the command. 3. If the SNI being tested has SNI-PEER error type 3073, replace the SNI in slot 17. Replacing an SNI may be service interrupting. Refer to the SNI-BD section for the procedure for replacing an SNI. Retry the command. 4. If the test continues to fail, follow normal escalation procedures.

Continued on next page

Table 9-180. TEST #759 Configuration Audit — *Continued*

Error Code	Test Result	Description/ Recommendation
118	FAIL	The SNI circuit pack (endpoint 1) cannot communicate with the equipped SNI in slot 18 (**list fiber-link** can be used to display fiber link endpoints). 1. Perform the "Fiber Fault Isolation Procedure" described in Chapter 5, "Responding to Alarms and Errors". 2. If the SNI being tested has SNI-PEER error type 3329, replace the SNI being tested. Replacing an SNI may be service interrupting. Refer to the SNI-BD section for the procedure for replacing an SNI. To view SNI-PEER errors, use the **display errors** command with category PNC-PEER. Retry the command. 3. If the SNI being tested has SNI-PEER error type 3329, replace the SNI in slot 18. Replacing an SNI may be service interrupting. Refer to the SNI-BD section for the procedure for replacing an SNI. Retry the command. 4. If the test continues to fail, follow normal escalation procedures.

Continued on next page

Table 9-180. TEST #759 Configuration Audit — *Continued*

Error Code	Test Result	Description/ Recommendation
119	FAIL	The SNI circuit pack (endpoint 1) cannot communicate with the equipped SNI in slot 19 (**list fiber-link** can be used to display fiber link endpoints). 1. Perform the "Fiber Fault Isolation Procedure" described in Chapter 5, "Responding to Alarms and Errors". 2. If the SNI being tested has SNI-PEER error type 3585, replace the SNI being tested. Replacing an SNI may be service interrupting. Refer to the SNI-BD section for the procedure for replacing an SNI. To view SNI-PEER errors, use the **display errors** command with category PNC-PEER. Retry the command. 3. If the SNI being tested has SNI-PEER error type 3585, replace the SNI in slot 19. Replacing an SNI may be service interrupting. Refer to the SNI-BD section for the procedure for replacing an SNI. Retry the command. 4. If the test continues to fail, follow normal escalation procedures.

Continued on next page

Table 9-180. TEST #759 Configuration Audit — *Continued*

Error Code	Test Result	Description/ Recommendation
120	FAIL	The SNI circuit pack (endpoint 1) cannot communicate with the equipped SNI in slot 20 (**list fiber-link** can be used to display fiber link endpoints). 1. Perform the "Fiber Fault Isolation Procedure" described in Chapter 5, "Responding to Alarms and Errors". 2. If the SNI being tested has SNI-PEER error type 3841, replace the SNI being tested. Replacing an SNI may be service interrupting. Refer to the SNI-BD section for the procedure for replacing an SNI. To view SNI-PEER errors, use the **display errors** command with category PNC-PEER. Retry the command. 3. If the SNI being tested has SNI-PEER error type 3841, replace the SNI in slot 20. Replacing an SNI may be service interrupting. Refer to the SNI-BD section for the procedure for replacing an SNI. Retry the command. 4. If the test continues to fail, follow normal escalation procedures.
133	FAIL	No neighbor link is administered, but the SNI (endpoint 1) has an EI neighbor (**list fiber-link** can be used to display fiber link endpoints). 1. Administer the SNI on a fiber link to the EI neighbor it is connected to via the **add fiber-link next** command. Or remove both fiber endpoints (i.e., this SNI and its EI neighbor) and remove the fiber endpoints from circuit pack administration via **change circuit-pack**. 2. If the test continues to fail, follow normal escalation procedures.

Continued on next page

Table 9-180. TEST #759 Configuration Audit — *Continued*

Error Code	Test Result	Description/ Recommendation
134	FAIL	No neighbor link is administered, but the SNI (endpoint 1) has an SNI neighbor (**list fiber-link** can be used to display fiber link endpoints). 1. Administer the SNI on a fiber link to the SNI neighbor it is connected to via the **add fiber-link next** command. Or remove both fiber endpoints (i.e., this SNI and its SNI neighbor) and remove the fiber endpoints from circuit pack administration via **change circuit-pack**. 2. If the test continues to fail, follow normal escalation procedures.
135	FAIL	The SNI circuit pack (endpoint 1) cannot communicate with its neighbor (**list fiber-link** can be used to display fiber link endpoints). The SNI has an administered neighbor, but cannot communicate with its neighbor. 1. Check if the administered neighbor is inserted. If not, insert the neighbor circuit pack. 2. Perform the "Fiber Fault Isolation Procedure" described in Chapter 5, 'Responding to Alarms and Errors". 3. If this test still fails, follow normal escalation procedures.
136	FAIL	The endpoint 1 SNI's administered neighbor does not match the physical neighbor connected (**list fiber-link** can be used to display fiber link endpoints). The type of neighbor administered is an SNI and the type of neighbor physically connected is an EI. Enter **list fiber-link** and verify that the fiber optic cable and metallic cable connections are installed as administered.
137	FAIL	The endpoint 1 SNI's administered neighbor does not match the physical neighbor connected (**list fiber-link** can be used to display fiber link endpoints). The type of neighbor administered is an EI and the type of neighbor physically connected is an SNI. Enter **list fiber-link** and verify that the fiber optic cable and metallic cable connections are installed as administered.

Continued on next page

Table 9-180. TEST #759 Configuration Audit — *Continued*

Error Code	Test Result	Description/ Recommendation
138	FAIL	The physical neighbor location of endpoint 1 SNI does not match administered neighbor location (**list fiber-link** can be used to display fiber link endpoints). The carrier and slot of the administered neighbor do not match the carrier and slot of the physical neighbor. Enter **list fiber-link** and verify that the fiber optic cable and metallic cable connections are installed as administered. If the problem does not seem to be caused by a physical connection problem or an administration problem, replace the neighbor circuit pack. It is possible for the neighbor circuit pack to have a hardware problem that causes it to report a wrong angel address (physical carrier/slot address) to software.
139	FAIL	The endpoint 1 SNI is administered to be connected to a DS1C but is not physically connected to a DS1C (**list fiber-link** can be used to display fiber link endpoints). If a DS1C is not supposed to be connected to this SNI, change administration to remove the DS1 converter complex from the fiber link associated with this SNI by: 1. Check for the fiber that this SNI is an endpoint of by checking **list fiber-link** 2. **Remove fiber-link** for the fiber that this SNI is an endpoint of. 3. Add the fiber back via **add fiber-link** and this time do not administer the DS1 converter complex. If a DS1C should be connected to this SNI, enter **list fiber-link** and verify that the fiber optic cable and/or metallic cable connections are installed as administered.

Continued on next page

Table 9-180. TEST #759 Configuration Audit — *Continued*

Error Code	Test Result	Description/ Recommendation
140	FAIL	The endpoint 1 SNI is physically connected to a DS1C but is not administered to be connected to a DS1C (**list fiber-link** can be used to display fiber link endpoints). Either add the DS1 converter complex to the fiber that this SNI is associated with by: 1. Check for the fiber that this SNI is an endpoint of by checking **list fiber-link**. 2. **Remove fiber-link** for the fiber that this SNI is an endpoint of. 3. Add the fiber back via **add fiber-link** and this time administer the DS1 converter complex also. Or, remove the DS1C connection and connect the SNI directly to its administered fiber endpoint by entering **list fiber-link** and verifying that the fiber optic cable and metallic cable connections are installed as administered.
202	FAIL	The SNI circuit pack (endpoint 2) cannot communicate with the equipped SNI in slot 2 (**list fiber-link** can be used to display fiber link endpoints). 1. Perform the "Fiber Fault Isolation Procedure" described in Chapter 5, "Responding to Alarms and Errors". 2. If the SNI being tested has SNI-PEER error type 1, replace the SNI being tested. Replacing an SNI may be service interrupting. Refer to the SNI-BD section for the procedure for replacing an SNI. To view SNI-PEER errors, use the **display errors** command with category PNC-PEER. Retry the command. 3. If the SNI being tested has SNI-PEER error type 1, replace the SNI in slot 2. Replacing an SNI may be service interrupting. Refer to the SNI-BD section for the procedure for replacing an SNI. Retry the command. 4. If the test continues to fail, follow normal escalation procedures.

Continued on next page

Table 9-180. TEST #759 Configuration Audit — *Continued*

Error Code	Test Result	Description/ Recommendation
203	FAIL	The SNI circuit pack (endpoint 2) cannot communicate with the equipped SNI in slot 3 (**list fiber-link** can be used to display fiber link endpoints). 1. Perform the "Fiber Fault Isolation Procedure" described in Chapter 5, "Responding to Alarms and Errors". 2. If the SNI being tested has SNI-PEER error type 257, replace the SNI being tested. Replacing an SNI may be service interrupting. Refer to the SNI-BD section for the procedure for replacing an SNI. To view SNI-PEER errors, use the **display errors** command with category PNC-PEER. Retry the command. 3. If the SNI being tested has SNI-PEER error type 257, replace the SNI in slot 3. Replacing an SNI may be service interrupting. Refer to the SNI-BD section for the procedure for replacing an SNI. Retry the command. 4. If the test continues to fail, follow normal escalation procedures.

Continued on next page

Table 9-180. TEST #759 Configuration Audit — *Continued*

Error Code	Test Result	Description/ Recommendation
204	FAIL	The SNI circuit pack (endpoint 2) cannot communicate with the equipped SNI in slot 4 (**list fiber-link** can be used to display fiber link endpoints). 1. Perform the "Fiber Fault Isolation Procedure" described in Chapter 5, "Responding to Alarms and Errors". 2. If the SNI being tested has SNI-PEER error type 513, replace the SNI being tested. Replacing an SNI may be service interrupting. Refer to the SNI-BD section for the procedure for replacing an SNI. To view SNI-PEER errors, use the **display errors** command with category PNC-PEER. Retry the command. 3. If the SNI being tested has SNI-PEER error type 513, replace the SNI in slot 4. Replacing an SNI may be service interrupting. Refer to the SNI-BD section for the procedure for replacing an SNI. Retry the command. 4. If the test continues to fail, follow normal escalation procedures.

Continued on next page

Table 9-180. TEST #759 Configuration Audit — *Continued*

Error Code	Test Result	Description/ Recommendation
205	FAIL	The SNI circuit pack (endpoint 2) cannot communicate with the equipped SNI in slot 5 (**list fiber-link** can be used to display fiber link endpoints). 1. Perform the "Fiber Fault Isolation Procedure" described in Chapter 5, "Responding to Alarms and Errors". 2. If the SNI being tested has SNI-PEER error type 769, replace the SNI being tested. Replacing an SNI may be service interrupting. Refer to the SNI-BD section for the procedure for replacing an SNI. To view SNI-PEER errors, use the **display errors** command with category PNC-PEER. Retry the command. 3. If the SNI being tested has SNI-PEER error type 769, replace the SNI in slot 5. Replacing an SNI may be service interrupting. Refer to the SNI-BD section for the procedure for replacing an SNI. Retry the command. 4. If the test continues to fail, follow normal escalation procedures.

Continued on next page

Table 9-180. TEST #759 Configuration Audit — *Continued*

Error Code	Test Result	Description/ Recommendation
206	FAIL	The SNI circuit pack (endpoint 2) cannot communicate with the equipped SNI in slot 6 (**list fiber-link** can be used to display fiber link endpoints). 1. Perform the "Fiber Fault Isolation Procedure" described in Chapter 5, "Responding to Alarms and Errors". 2. If the SNI being tested has SNI-PEER error type 1025, replace the SNI being tested. Replacing an SNI may be service interrupting. Refer to the SNI-BD section for the procedure for replacing an SNI. To view SNI-PEER errors, use the **display errors** command with category PNC-PEER. Retry the command. 3. If the SNI being tested has SNI-PEER error type 1025, replace the SNI in slot 6. Replacing an SNI may be service interrupting. Refer to the SNI-BD section for the procedure for replacing an SNI. Retry the command. 4. If the test continues to fail, follow normal escalation procedures.

Continued on next page

Table 9-180. TEST #759 Configuration Audit — *Continued*

Error Code	Test Result	Description/ Recommendation
207	FAIL	The SNI circuit pack (endpoint 2) cannot communicate with the equipped SNI in slot 7 (**list fiber-link** can be used to display fiber link endpoints). 1. Perform the "Fiber Fault Isolation Procedure" described in Chapter 5, "Responding to Alarms and Errors". 2. If the SNI being tested has SNI-PEER error type 1281, replace the SNI being tested. Replacing an SNI may be service interrupting. Refer to the SNI-BD section for the procedure for replacing an SNI. To view SNI-PEER errors, use the **display errors** command with category PNC-PEER. Retry the command. 3. If the SNI being tested has SNI-PEER error type 1281, replace the SNI in slot 7. Replacing an SNI may be service interrupting. Refer to the SNI-BD section for the procedure for replacing an SNI. Retry the command. 4. If the test continues to fail, follow normal escalation procedures.

Continued on next page

Table 9-180. TEST #759 Configuration Audit — *Continued*

Error Code	Test Result	Description/ Recommendation
208	FAIL	The SNI circuit pack (endpoint 2) cannot communicate with the equipped SNI in slot 8 (**list fiber-link** can be used to display fiber link endpoints). 1. Perform the "Fiber Fault Isolation Procedure" described in Chapter 5, "Responding to Alarms and Errors". 2. If the SNI being tested has SNI-PEER error type 1537, replace the SNI being tested. Replacing an SNI may be service interrupting. Refer to the SNI-BD section for the procedure for replacing an SNI. To view SNI-PEER errors, use the **display errors** command with category PNC-PEER. Retry the command. 3. If the SNI being tested has SNI-PEER error type 1537, replace the SNI in slot 8. Replacing an SNI may be service interrupting. Refer to the SNI-BD section for the procedure for replacing an SNI. Retry the command. 4. If the test continues to fail, follow normal escalation procedures.

Continued on next page

Table 9-180. TEST #759 Configuration Audit — *Continued*

Error Code	Test Result	Description/ Recommendation
209	FAIL	The SNI circuit pack (endpoint 2) cannot communicate with the equipped SNI in slot 9 (**list fiber-link** can be used to display fiber link endpoints). 1. Perform the "Fiber Fault Isolation Procedure" described in Chapter 5, "Responding to Alarms and Errors". 2. If the SNI being tested has SNI-PEER error type 1793, replace the SNI being tested. Replacing an SNI may be service interrupting. Refer to the SNI-BD section for the procedure for replacing an SNI. To view SNI-PEER errors, use the **display errors** command with category PNC-PEER. Retry the command. 3. If the SNI being tested has SNI-PEER error type 1793, replace the SNI in slot 9. Replacing an SNI may be service interrupting. Refer to the SNI-BD section for the procedure for replacing an SNI. Retry the command. 4. If the test continues to fail, follow normal escalation procedures.

Continued on next page

Table 9-180. TEST #759 Configuration Audit — *Continued*

Error Code	Test Result	Description/ Recommendation
212	FAIL	The SNI circuit pack (endpoint 2) cannot communicate with the active SNC (**list fiber-link** can be used to display fiber link endpoints). 1. Check the error log for other SNI circuit packs in the same carrier with a 257 SNI-BD error. Use **display errors** with category PNC to view SNI-BD errors. If other SNI circuit packs in the same switch node carrier have error 257, then replace the active SNC in this switch node carrier. Replacing an SNC may be service interrupting. Refer to the SNC-BD section for the procedure for replacing an SNC. 2. Replace this SNI. Replacing an SNI may be service interrupting. Refer to the SNI-BD section for the procedure for replacing an SNI. 3. Replace the active SNC in the same switch node carrier. Replacing an SNC may be service interrupting. Refer to the SNC-BD section for the procedure for replacing an SNC. 4. If this test still fails, follow normal escalation procedures.

Continued on next page

Table 9-180. TEST #759 Configuration Audit — *Continued*

Error Code	Test Result	Description/ Recommendation
213	FAIL	The SNI circuit pack (endpoint 2) cannot communicate with the equipped SNI in slot 13 (**list fiber-link** can be used to display fiber link endpoints). 1. Perform the "Fiber Fault Isolation Procedure" described in Chapter 5, "Responding to Alarms and Errors". 2. If the SNI being tested has SNI-PEER error type 2049, replace the SNI being tested. Replacing an SNI may be service interrupting. Refer to the SNI-BD section for the procedure for replacing an SNI. To view SNI-PEER errors, use the **display errors** command with category PNC-PEER. Retry the command. 3. If the SNI being tested has SNI-PEER error type 2049, replace the SNI in slot 13. Replacing an SNI may be service interrupting. Refer to the SNI-BD section for the procedure for replacing an SNI. Retry the command. 4. If the test continues to fail, follow normal escalation procedures.

Continued on next page

Table 9-180. TEST #759 Configuration Audit — *Continued*

Error Code	Test Result	Description/ Recommendation
214	FAIL	The SNI circuit pack (endpoint 2) cannot communicate with the equipped SNI in slot 14 (**list fiber-link** can be used to display fiber link endpoints). 1. Perform the "Fiber Fault Isolation Procedure" described in Chapter 5, "Responding to Alarms and Errors". 2. If the SNI being tested has SNI-PEER error type 2305, replace the SNI being tested. Replacing an SNI may be service interrupting. Refer to the SNI-BD section for the procedure for replacing an SNI. To view SNI-PEER errors, use the **display errors** command with category PNC-PEER. Retry the command. 3. If the SNI being tested has SNI-PEER error type 2305, replace the SNI in slot 14. Replacing an SNI may be service interrupting. Refer to the SNI-BD section for the procedure for replacing an SNI. Retry the command. 4. If the test continues to fail, follow normal escalation procedures.

Continued on next page

Table 9-180. TEST #759 Configuration Audit — *Continued*

Error Code	Test Result	Description/ Recommendation
215	FAIL	The SNI circuit pack (endpoint 2) cannot communicate with the equipped SNI in slot 15 (**list fiber-link** can be used to display fiber link endpoints). 1. Perform the "Fiber Fault Isolation Procedure" described in Chapter 5, "Responding to Alarms and Errors". 2. If the SNI being tested has SNI-PEER error type 2561, replace the SNI being tested. Replacing an SNI may be service interrupting. Refer to the SNI-BD section for the procedure for replacing an SNI. To view SNI-PEER errors, use the **display errors** command with category PNC-PEER. Retry the command. 3. If the SNI being tested has SNI-PEER error type 2561, replace the SNI in slot 15. Replacing an SNI may be service interrupting. Refer to the SNI-BD section for the procedure for replacing an SNI. Retry the command. 4. If the test continues to fail, follow normal escalation procedures.

Continued on next page

Table 9-180. TEST #759 Configuration Audit — *Continued*

Error Code	Test Result	Description/ Recommendation
216	FAIL	The SNI circuit pack (endpoint 2) cannot communicate with the equipped SNI in slot 16 (**list fiber-link** can be used to display fiber link endpoints). 1. Perform the "Fiber Fault Isolation Procedure" described in Chapter 5, "Responding to Alarms and Errors". 2. If the SNI being tested has SNI-PEER error type 2817, replace the SNI being tested. Replacing an SNI may be service interrupting. Refer to the SNI-BD section for the procedure for replacing an SNI. To view SNI-PEER errors, use the **display errors** command with category PNC-PEER. Retry the command. 3. If the SNI being tested has SNI-PEER error type 2817, replace the SNI in slot 16. Replacing an SNI may be service interrupting. Refer to the SNI-BD section for the procedure for replacing an SNI. Retry the command. 4. If the test continues to fail, follow normal escalation procedures.

Continued on next page

Table 9-180. TEST #759 Configuration Audit — *Continued*

Error Code	Test Result	Description/ Recommendation
217	FAIL	The SNI circuit pack (endpoint 2) cannot communicate with the equipped SNI in slot 17 (**list fiber-link** can be used to display fiber link endpoints). 1. Perform the "Fiber Fault Isolation Procedure" described in Chapter 5, "Responding to Alarms and Errors". 2. If the SNI being tested has SNI-PEER error type 3073, replace the SNI being tested. Replacing an SNI may be service interrupting. Refer to the SNI-BD section for the procedure for replacing an SNI. To view SNI-PEER errors, use the **display errors** command with category PNC-PEER. Retry the command. 3. If the SNI being tested has SNI-PEER error type 3073, replace the SNI in slot 17. Replacing an SNI may be service interrupting. Refer to the SNI-BD section for the procedure for replacing an SNI. Retry the command. 4. If the test continues to fail, follow normal escalation procedures.

Continued on next page

Table 9-180. TEST #759 Configuration Audit — *Continued*

Error Code	Test Result	Description/ Recommendation
218	FAIL	The SNI circuit pack (endpoint 2) cannot communicate with the equipped SNI in slot 18 (**list fiber-link** can be used to display fiber link endpoints). 1. Perform the "Fiber Fault Isolation Procedure" described in Chapter 5, "Responding to Alarms and Errors". 2. If the SNI being tested has SNI-PEER error type 3329, replace the SNI being tested. Replacing an SNI may be service interrupting. Refer to the SNI-BD section for the procedure for replacing an SNI. To view SNI-PEER errors, use the **display errors** command with category PNC-PEER. Retry the command. 3. If the SNI being tested has SNI-PEER error type 3329, replace the SNI in slot 18. Replacing an SNI may be service interrupting. Refer to the SNI-BD section for the procedure for replacing an SNI. Retry the command. 4. If the test continues to fail, follow normal escalation procedures.

Continued on next page

Table 9-180. TEST #759 Configuration Audit — *Continued*

Error Code	Test Result	Description/ Recommendation
219	FAIL	The SNI circuit pack (endpoint 2) cannot communicate with the equipped SNI in slot 19 (**list fiber-link** can be used to display fiber link endpoints). 1. Perform the "Fiber Fault Isolation Procedure" described in Chapter 5, "Responding to Alarms and Errors". 2. If the SNI being tested has SNI-PEER error type 3585, replace the SNI being tested. Replacing an SNI may be service interrupting. Refer to the SNI-BD section for the procedure for replacing an SNI. To view SNI-PEER errors, use the **display errors** command with category PNC-PEER. Retry the command. 3. If the SNI being tested has SNI-PEER error type 3585, replace the SNI in slot 19. Replacing an SNI may be service interrupting. Refer to the SNI-BD section for the procedure for replacing an SNI. Retry the command. 4. If the test continues to fail, follow normal escalation procedures.

Continued on next page

Table 9-180. TEST #759 Configuration Audit — *Continued*

Error Code	Test Result	Description/ Recommendation
220	FAIL	The SNI circuit pack (endpoint 2) cannot communicate with the equipped SNI in slot 20 (**list fiber-link** can be used to display fiber link endpoints). 1. Perform the "Fiber Fault Isolation Procedure" described in Chapter 5, "Responding to Alarms and Errors". 2. If the SNI being tested has SNI-PEER error type 3841, replace the SNI being tested. Replacing an SNI may be service interrupting. Refer to the SNI-BD section for the procedure for replacing an SNI. To view SNI-PEER errors, use the **display errors** command with category PNC-PEER. Retry the command. 3. If the SNI being tested has SNI-PEER error type 3841, replace the SNI in slot 20. Replacing an SNI may be service interrupting. Refer to the SNI-BD section for the procedure for replacing an SNI. Retry the command. 4. If the test continues to fail, follow normal escalation procedures.
233	FAIL	No neighbor link is administered, but the SNI (endpoint 2) has an EI neighbor (**list fiber-link** can be used to display fiber link endpoints). 1. Administer the SNI on a fiber link to the EI neighbor it is connected to via the **add fiber-link next** command. Or remove both fiber endpoints (i.e., this SNI and its EI neighbor) and remove the fiber endpoints from circuit pack administration via **change circuit-pack**. 2. If the test continues to fail, follow normal escalation procedures.

Continued on next page

Table 9-180. TEST #759 Configuration Audit — *Continued*

Error Code	Test Result	Description/ Recommendation
234	FAIL	No neighbor link is administered, but the SNI (endpoint 2) has an SNI neighbor (**list fiber-link** can be used to display fiber link endpoints). 1. Administer the SNI on a fiber link to the SNI neighbor it is connected to via the **add fiber-link next** command. Or remove both fiber endpoints (i.e., this SNI and its SNI neighbor) and remove the fiber endpoints from circuit pack administration via **change circuit-pack**. 2. If the test continues to fail, follow normal escalation procedures.
235	FAIL	The SNI circuit pack (endpoint 2) cannot communicate with its neighbor (**list fiber-link** can be used to display fiber link endpoints). The SNI has an administered neighbor, but cannot communicate with its neighbor. 1. Check if the administered neighbor is inserted. If not, insert the neighbor circuit pack. 2. Perform the "Fiber Fault Isolation Procedure" described in Chapter 5, "Responding to Alarms and Errors". 3. If this test still fails, follow normal escalation procedures.
236	FAIL	The endpoint 2 SNI's administered neighbor does not match the physical neighbor connected (**list fiber-link** can be used to display fiber link endpoints). The type of neighbor administered is an SNI and the type of neighbor physically connected is an EI. Enter **list fiber-link** and verify that the fiber optic cable and metallic cable connections are installed as administered.
237	FAIL	The endpoint 2 SNI's administered neighbor does not match the physical neighbor connected (**list fiber-link** can be used to display fiber link endpoints). The type of neighbor administered is an EI and the type of neighbor physically connected is an SNI. Enter **list fiber-link** and verify that the fiber optic cable and metallic cable connections are installed as administered.

Continued on next page

Table 9-180. TEST #759 Configuration Audit — *Continued*

Error Code	Test Result	Description/ Recommendation
238	FAIL	The physical neighbor location of endpoint 2 SNI does not match administered neighbor location (**list fiber-link** can be used to display fiber link endpoints). The carrier and slot of the administered neighbor do not match the carrier and slot of the physical neighbor. Enter **list fiber-link** and verify that the fiber optic cable and metallic cable connections are installed as administered. If the problem does not seem to be caused by a physical connection problem or an administration problem, replace the neighbor circuit pack. It is possible for the neighbor circuit pack to have a hardware problem that causes it to report a wrong angel address (physical carrier/slot address) to software.
239	FAIL	The endpoint 2 SNI is administered to be connected to a DS1C but is not physically connected to a DS1C (**list fiber-link** can be used to display fiber link endpoints). If a DS1C is not supposed to be connected to this SNI, change administration to remove the DS1 converter complex from the fiber link associated with this SNI by: 1. Check for the fiber that this SNI is an endpoint of by checking **list fiber-link** 2. **Remove fiber-link** for the fiber that this SNI is an endpoint of. 3. Add the fiber back via **add fiber-link** and this time do not administer the DS1 converter complex. If a DS1C should be connected to this SNI, enter **list fiber-link** and verify that the fiber optic cable and/or metallic cable connections are installed as administered.

Continued on next page

Table 9-180. TEST #759 Configuration Audit — *Continued*

Error Code	Test Result	Description/ Recommendation
240	FAIL	The endpoint 2 SNI is physically connected to a DS1C but is not administered to be connected to a DS1C (**list fiber-link** can be used to display fiber link endpoints). Either add the DS1 converter complex to the fiber that this SNI is associated with by: 1. Check for the fiber that this SNI is an endpoint of by checking **list fiber-link**. 2. **Remove fiber-link** for the fiber that this SNI is an endpoint of. 3. Add the fiber back via **add fiber-link** and this time administer the DS1 converter complex also. Or, remove the DS1C connection and connect the SNI directly to its administered fiber endpoint by entering **list fiber-link** and verifying that the fiber optic cable and metallic cable connections are installed as administered.
	PASS	The administered data and the circuit packs the SNI (s) can communicate with match.

Fiber Link Reset Test (#768)

This test is destructive.

This test resets both endpoints of the fiber link and is executed via the **reset fiber-link F P** command. Any DS1C circuit packs on the fiber link are not reset.

The **reset fiber-link** command should almost never be used. It may be necessary to use it when the endpoint circuit packs enter a mode in which they cannot communicate with software. When necessary, always reset fiber endpoints with the command instead of reseating the endpoint circuit packs.

For EI-EI fibers that connect an EPN to the PPN, the EI on the EPN is reset first followed by the EI on the PPN. For EI-EI fiber links that connect two EPN s, one EI is reset first followed by the other.

For an EI-SNI fiber link in which the EI is on the PPN, the SNI is reset first followed by the EI.

For an EI-SNI fiber link in which the EI is on an EPN, the SNI is reset first followed by the EI.

For an SNI-SNI fiber link, the SNI farthest from the PPN is reset first followed by the SNI nearest to the PPN.

When an EI endpoint is reset, the Expansion Interface Reset Test (#336) is executed. When an SNI endpoint is reset, the SNI Reset Test (#761) is executed. These tests are described in the EXP-INTF and SNI-BD sections.

This test starts the other reset test mentioned above and returns PASS without waiting for the results of the other reset test. For a better indication of how the other reset tests are running, use the **reset board UUCSS** command on each individual fiber link endpoint.

Table 9-181. TEST #768 Fiber Link Reset Test

Error Code	Test Result	Description/ Recommendation
1703	ABORT	Both fiber endpoints are in the hardware path for INLs to their respective switch node carriers and, thus, cannot get a response from this test because the INLs response should come on will go down as a result of the reset. 1. Reset the individual fiber-link endpoints via the **reset board**R command.
2500	ABORT	Internal System Error 1. Retry the command at 1-minute intervals a maximum of 3 times. 2. If the test continues to abort, follow normal escalation procedures.
	PASS	The reset of both fiber endpoints successfully completed.

Failure Audit (#777)

This test is non-destructive.

This test queries the SNI (s) on the fiber link for any existing failures and any unacknowledged cleared failure messages. Each failure generates an error and alarm entry against SNI-BD, SNI-PEER, or FIBER-LK. An unacknowledged cleared failure message is a message the SNI circuit pack sent to software indicating a previous failure is now gone and the SNI circuit pack did not receive a message from software indicating that the failure message was received by software.

If no failures are detected by the SNI circuit pack, this test will pass.

If this test reports failures, the results screen for the **test fiber-link** command will show **FAIL** with no FAIL code. The error log must then be displayed via **display errors** with category PNC to view SNI-BD and FIBER-LK errors and **display errors** with category PNC-PEER to view SNI-PEER errors.

For EI-EI fiber links, this test is not run. For EI-SNI fiber links, this test is run on the SNI circuit pack endpoint of the fiber link. For SNI-SNI fiber links, this test is run on both SNI circuit pack endpoints of the fiber link.

Table 9-182. TEST #777 Failure Audit

Error Code	Test Result	Description/ Recommendation
2100	ABORT	Could not allocate the necessary system resources to run this test. 1. Retry the command at 1 minute intervals a maximum of 3 times. 2. If the test continues to abort, follow normal escalation procedures.
2300	ABORT	The downlink message necessary to run this test could not be sent. 1. Retry the command at 1 minute intervals a maximum of 3 times. 2. If the test continues to abort, follow normal escalation procedures.

Continued on next page

Table 9-182. TEST #777 Failure Audit — *Continued*

Error Code	Test Result	Description/ Recommendation
2301	ABORT	The software timer could not be set before sending the downlink message necessary to run this test. 1. Retry the command at 1 minute intervals a maximum of 3 times. 2. If the test continues to abort, follow normal escalation procedures.
2302	ABORT	The SNI circuit pack claims that it received a bad message from software. 1. Retry the command at 1 minute intervals a maximum of 3 times. 2. If the test continues to abort, follow normal escalation procedures.
2303	ABORT	The SNI circuit pack claims that the test requested by software is invalid. 1. Retry the command at 1 minute intervals a maximum of 3 times. 2. If the test continues to abort, follow normal escalation procedures.
2304	ABORT	SNI firmware is not able to run the test. 1. Retry the command at 1 minute intervals a maximum of 3 times. 2. If the test continues to abort, follow normal escalation procedures.

Continued on next page

Table 9-182. TEST #777 Failure Audit — *Continued*

Error Code	Test Result	Description/ Recommendation
2306	ABORT	An SNI circuit pack on the fiber link is not responding to test requests sent by software. 1. Run the **test led switch-node** for the switch node(s) that the SNI (s) reside in to verify whether the LED s on the board(s) light. Follow the steps below for the SNI (s) from step 1 that had no LED s light. 2. If the LED s on the other boards in the carrier light, but the LED s on this board do not light, run test 760 via **test board UUCSS l** for the active SNC in this carrier. Wait 5 minutes and then try step 1 one more time. If the LED s on this board still do not light, replace this board. Replacing an SNI may be service interrupting. Refer to the SNI-BD section for the procedure for replacing an SNI. 3. If none of the LED s light for the boards in the same carrier as this board, fix any problems associated with the connectivity of this carrier to the SPE. Check **list fibers** to determine the fiber connections to this carrier. Check the LED s on all SNI s and EI s and fix any fiber problems. Enter **display errors** and follow the associated repair procedures for any EXP-INTF error entries associated with the PPN. Also, follow the associated repair procedures for any SYNC, SNI-BD, SNC-BD, FIBER-LK, or SNI-PEER error entries. 4. If the test continues to abort, follow normal escalation procedures.

Continued on next page

Table 9-182. TEST #777 Failure Audit — *Continued*

Error Code	Test Result	Description/ Recommendation
	FAIL	The SNI circuit pack reported failures or retransmitted a cleared failure message. 1. If this is the first time this test was run, run the test again. If there were any previous failure messages that software did not acknowledge, this test will FAIL even if the failure messages indicate a FAIL to PASS transition, i.e., a problem has gone away. If this test is run twice and FAILs both times, then at least one problem still exists. 2. Check the error and alarm logs (via **display errors** and **display alarms**) for SNI-BD, SNI-PEER, and FIBER-LK entries. Fix any errors by referring to the associated repair procedures. 3. If no SNI-BD, SNI-PEER, or FIBER-LK entries exist in the error and alarm logs, retry the command. 4. If the test continues to fail, follow normal escalation procedures.
	PASS	No problems are detected on the board.

SNI Fiber Out of Frame Query (#989)

This test is non-destructive.

The SNI circuit pack reports whether a fiber out of frame condition exists, whether a loss of signal condition exists, and whether the lightwave transceiver is present.

Table 9-183. TEST #989 SNI Fiber Out of Frame Query

Error Code	Test Result	Description/ Recommendation
2100	ABORT	Could not allocate the necessary system resources to run this test. 1. Retry the command at 1 minute intervals a maximum of 3 times. 2. If the test continues to abort, follow normal escalation procedures.
1415	ABORT	The lightwave transceiver is not present for endpoint 1 of the fiber link (**list fiber-link** can be used to display fiber link endpoints). 1. If a lightwave transceiver is not supposed to be present, do nothing. For example, an SNI connected to a DS1C circuit pack or an SNI with a metallic connection does not have a lightwave transceiver. 2. Otherwise, continue with the following steps. 3. Check the lightwave transceiver connections. 4. Replace the lightwave transceiver. 5. Replace the SNI circuit pack. 6. If the test continues to abort, follow normal escalation procedures.

Continued on next page

Table 9-183. TEST #989 SNI Fiber Out of Frame Query — *Continued*

Error Code	Test Result	Description/ Recommendation
1416	ABORT	The lightwave transceiver is not present for endpoint 2 of the fiber link (**list fiber-link** can be used to display fiber link endpoints). 1. If a lightwave transceiver is not supposed to be present, do nothing. For example, an SNI connected to a DS1C circuit pack or an SNI with a metallic connection does not have a lightwave transceiver. 2. Otherwise, continue with the following steps. 3. Check the lightwave transceiver connections. 4. Replace the lightwave transceiver. 5. Replace the SNI circuit pack. 6. If the test continues to abort, follow normal escalation procedures.
2300	ABORT	The downlink message necessary to run this test could not be sent. 1. Retry the command at 1 minute intervals a maximum of 3 times. 2. If the test continues to abort, follow normal escalation procedures.
2301	ABORT	The software timer could not be set before sending the downlink message necessary to run this test. 1. Retry the command at 1 minute intervals a maximum of 3 times. 2. If the test continues to abort, follow normal escalation procedures.
2304	ABORT	SNI firmware is not able to run the test. 1. Retry the command at 1 minute intervals a maximum of 3 times. 2. If the test continues to abort, follow normal escalation procedures.

Continued on next page

Table 9-183. TEST #989 SNI Fiber Out of Frame Query — *Continued*

Error Code	Test Result	Description/ Recommendation
2306	ABORT	An SNI circuit pack on the fiber link is not responding to test requests sent by software. 1. Run the **test led switch-node** for the switch node(s) that the SNI (s) reside in to verify whether the LED s on the board(s) light. Follow the steps below for the SNI (s) from step 1 that had no LED s light. 2. If the LED s on the other boards in the carrier light, but the LED s on this board do not light, run test 760 via **test board UUCSS l** for the active SNC in this carrier. Wait 5 minutes and then try step 1 one more time. If the LED s on this board still do not light, replace this board. Replacing an SNI may be service interrupting. Refer to the SNI-BD section for the procedure for replacing an SNI. 3. If none of the LED s light for the boards in the same carrier as this board, fix any problems associated with the connectivity of this carrier to the SPE. Check **list fibers** to determine the fiber connections to this carrier. Check the LED s on all SNI s and EI s and fix any fiber problems. Enter **display errors** and follow the associated repair procedures for any EXP-INTF error entries associated with the PPN. Also, follow the associated repair procedures for any SYNC, SNI-BD, SNC-BD, FIBER-LK, or SNI-PEER error entries. 4. If the test continues to abort, follow normal escalation procedures.
2500	ABORT	Internal System Error 1. Retry the command at 1 minute intervals a maximum of 3 times. 2. If the test continues to abort, follow normal escalation procedures.

Continued on next page

Table 9-183. TEST #989 SNI Fiber Out of Frame Query — *Continued*

Error Code	Test Result	Description/ Recommendation
141	FAIL	The SNI circuit pack (endpoint 1 of the fiber-link) has a fiber out of frame condition, but no loss of signal condition. Also, a lightwave transceiver is connected to the SNI circuit pack. 1. Check that the connected circuit pack is physically installed. The connected circuit pack is the other endpoint of the fiber-link if no DS1C complex is administered (check via **list fiber-link**). Otherwise, if a DS1C complex is administered, the connected circuit pack is the DS1C circuit pack connected to the SNI circuit pack. 2. Perform the "Fiber Fault Isolation Procedure" described in Chapter 5, "Responding to Alarms and Errors". 3. Replace this SNI circuit pack. 4. Replace the connected circuit pack. 5. If the test continues to fail, follow normal escalation procedures.
142	FAIL	The SNI circuit pack (endpoint 1 of the fiber-link) has a fiber out of frame condition, but no loss of signal condition. Also, no lightwave transceiver is connected to the SNI circuit pack. 1. Check that the connected circuit pack is physically installed. The connected circuit pack is the other endpoint of the fiber-link if no DS1C complex is administered (check via **list fiber-link**). Otherwise, if a DS1C complex is administered, the connected circuit pack is the DS1C circuit pack connected to the SNI circuit pack. 2. Perform the "Fiber Fault Isolation Procedure" described in Chapter 5, "Responding to Alarms and Errors". 3. Replace this SNI circuit pack. 4. Replace the connected circuit pack. 5. If the test continues to fail, follow normal escalation procedures.

Continued on next page

Table 9-183. TEST #989 SNI Fiber Out of Frame Query — *Continued*

Error Code	Test Result	Description/ Recommendation
143	FAIL	The SNI circuit pack (endpoint 1 of the fiber-link) has a loss of signal condition, but no fiber out of frame condition. Also, a lightwave transceiver is connected to the SNI circuit pack. 1. Check that the connected circuit pack is physically installed. The connected circuit pack is the other endpoint of the fiber-link if no DS1C complex is administered (check via **list fiber-link**). Otherwise, if a DS1C complex is administered, the connected circuit pack is the DS1C circuit pack connected to the SNI circuit pack. 2. Perform the "Fiber Fault Isolation Procedure" described in Chapter 5, "Responding to Alarms and Errors". 3. Replace this SNI circuit pack. 4. Replace the connected circuit pack. 5. If the test continues to fail, follow normal escalation procedures.
144	FAIL	The SNI circuit pack (endpoint 1 of the fiber-link) has a loss of signal condition, but no fiber out of frame condition. Also, no lightwave transceiver is connected to the SNI circuit pack. 1. Check that the connected circuit pack is physically installed. The connected circuit pack is the other endpoint of the fiber-link if no DS1C complex is administered (check via **list fiber-link**). Otherwise, if a DS1C complex is administered, the connected circuit pack is the DS1C circuit pack connected to the SNI circuit pack. 2. Perform the "Fiber Fault Isolation Procedure" described in Chapter 5, "Responding to Alarms and Errors". 3. Replace this SNI circuit pack. 4. Replace the connected circuit pack. 5. If the test continues to fail, follow normal escalation procedures.

Continued on next page

Table 9-183. TEST #989 SNI Fiber Out of Frame Query — *Continued*

Error Code	Test Result	Description/ Recommendation
145	FAIL	The SNI circuit pack (endpoint 1 of the fiber-link) has a fiber out of frame condition and a no loss of signal condition. Also, a lightwave transceiver is connected to the SNI circuit pack. 1. Check that the connected circuit pack is physically installed. The connected circuit pack is the other endpoint of the fiber-link if no DS1C complex is administered (check via **list fiber-link**). Otherwise, if a DS1C complex is administered, the connected circuit pack is the DS1C circuit pack connected to the SNI circuit pack. 2. Perform the "Fiber Fault Isolation Procedure" described in Chapter 5, "Responding to Alarms and Errors". 3. Replace this SNI circuit pack. 4. Replace the connected circuit pack. 5. If the test continues to fail, follow normal escalation procedures.
146	FAIL	The SNI circuit pack (endpoint 1 of the fiber-link) has a fiber out of frame condition, but no loss of signal condition. Also, no lightwave transceiver is connected to the SNI circuit pack. 1. Check that the connected circuit pack is physically installed. The connected circuit pack is the other endpoint of the fiber-link if no DS1C complex is administered (check via **list fiber-link**). Otherwise, if a DS1C complex is administered, the connected circuit pack is the DS1C circuit pack connected to the SNI circuit pack. 2. Perform the "Fiber Fault Isolation Procedure" described in Chapter 5, "Responding to Alarms and Errors". 3. Replace this SNI circuit pack. 4. Replace the connected circuit pack. 5. If the test continues to fail, follow normal escalation procedures.

Continued on next page

Table 9-183. TEST #989 SNI Fiber Out of Frame Query — *Continued*

Error Code	Test Result	Description/ Recommendation
241	FAIL	The SNI circuit pack (endpoint 2 of the fiber-link) has a fiber out of frame condition, but no loss of signal condition. Also, a lightwave transceiver is connected to the SNI circuit pack. 1. Check that the connected circuit pack is physically installed. The connected circuit pack is the other endpoint of the fiber-link if no DS1C complex is administered (check via **list fiber-link**). Otherwise, if a DS1C complex is administered, the connected circuit pack is the DS1C circuit pack connected to the SNI circuit pack. 2. Perform the "Fiber Fault Isolation Procedure" described in Chapter 5, "Responding to Alarms and Errors". 3. Replace this SNI circuit pack. 4. Replace the connected circuit pack. 5. If the test continues to fail, follow normal escalation procedures.
242	FAIL	The SNI circuit pack (endpoint 2 of the fiber-link) has a fiber out of frame condition, but no loss of signal condition. Also, no lightwave transceiver is connected to the SNI circuit pack. 1. Check that the connected circuit pack is physically installed. The connected circuit pack is the other endpoint of the fiber-link if no DS1C complex is administered (check via **list fiber-link**). Otherwise, if a DS1C complex is administered, the connected circuit pack is the DS1C circuit pack connected to the SNI circuit pack. 2. Perform the "Fiber Fault Isolation Procedure" described in Chapter 5, "Responding to Alarms and Errors". 3. Replace this SNI circuit pack. 4. Replace the connected circuit pack. 5. If the test continues to fail, follow normal escalation procedures.

Continued on next page

Table 9-183. TEST #989 SNI Fiber Out of Frame Query — *Continued*

Error Code	Test Result	Description/ Recommendation
243	FAIL	The SNI circuit pack (endpoint 2 of the fiber-link) has a loss of signal condition, but no fiber out of frame condition. Also, a lightwave transceiver is connected to the SNI circuit pack. 1. Check that the connected circuit pack is physically installed. The connected circuit pack is the other endpoint of the fiber-link if no DS1C complex is administered (check via **list fiber-link**). Otherwise, if a DS1C complex is administered, the connected circuit pack is the DS1C circuit pack connected to the SNI circuit pack. 2. Perform the "Fiber Fault Isolation Procedure" described in Chapter 5, "Responding to Alarms and Errors". 3. Replace this SNI circuit pack. 4. Replace the connected circuit pack. 5. If the test continues to fail, follow normal escalation procedures.
244	FAIL	The SNI circuit pack (endpoint 2 of the fiber-link) has a loss of signal condition, but no fiber out of frame condition. Also, no lightwave transceiver is connected to the SNI circuit pack. 1. Check that the connected circuit pack is physically installed. The connected circuit pack is the other endpoint of the fiber-link if no DS1C complex is administered (check via **list fiber-link**). Otherwise, if a DS1C complex is administered, the connected circuit pack is the DS1C circuit pack connected to the SNI circuit pack. 2. Perform the "Fiber Fault Isolation Procedure" described in Chapter 5, "Responding to Alarms and Errors". 3. Replace this SNI circuit pack. 4. Replace the connected circuit pack. 5. If the test continues to fail, follow normal escalation procedures.

Continued on next page

Table 9-183. TEST #989 SNI Fiber Out of Frame Query — *Continued*

Error Code	Test Result	Description/ Recommendation
245	FAIL	The SNI circuit pack (endpoint 2 of the fiber-link) has a fiber out of frame condition and a no loss of signal condition. Also, a lightwave transceiver is connected to the SNI circuit pack. 1. Check that the connected circuit pack is physically installed. The connected circuit pack is the other endpoint of the fiber-link if no DS1C complex is administered (check via **list fiber-link**). Otherwise, if a DS1C complex is administered, the connected circuit pack is the DS1C circuit pack connected to the SNI circuit pack. 2. Perform the "Fiber Fault Isolation Procedure" described in Chapter 5, "Responding to Alarms and Errors". 3. Replace this SNI circuit pack. 4. Replace the connected circuit pack. 5. If the test continues to fail, follow normal escalation procedures.

Continued on next page

Table 9-183. TEST #989 SNI Fiber Out of Frame Query — *Continued*

Error Code	Test Result	Description/ Recommendation
246	FAIL	The SNI circuit pack (endpoint 2 of the fiber-link) has a fiber out of frame condition, but no loss of signal condition. Also, no lightwave transceiver is connected to the SNI circuit pack. 1. Check that the connected circuit pack is physically installed. The connected circuit pack is the other endpoint of the fiber-link if no DS1C complex is administered (check via **list fiber-link**). Otherwise, if a DS1C complex is administered, the connected circuit pack is the DS1C circuit pack connected to the SNI circuit pack. 2. Perform the "Fiber Fault Isolation Procedure" described in Chapter 5, "Responding to Alarms and Errors". 3. Replace this SNI circuit pack. 4. Replace the connected circuit pack. 5. If the test continues to fail, follow normal escalation procedures.
	PASS	No problems associated with this test are detected on the SNI.

Maintenance Object Repair Procedures GPTD-PT

G

GPTD-PT (General Purpose Tone Detector Port)

MO Name As It Appears in Alarm Log	Alarm Level	Initial System Technician Command to Run (a)	Full Name of MO
GPTD-PT	MAJOR	test port UUCSSpp sh	General Purpose Tone Detector Port
GPTD-PT	MINOR	test port UUCSSpp sh	General Purpose Tone Detector Port
GPTD-PT	WARNING	release port UUCSSpp	General Purpose Tone Detector Port

a. UU is the universal cabinet number (1 for PPN, 2 - 441 for PPN, 2 - 44 for EPN s). C is the carrier designation (A, B, C, D, or E). SS is the number of the slot in which the circuit pack resides (01 to 21). pp is the two digit port number (01, 02, ...).

The General Purpose Tone Detector (GPTD) Ports, also known as Call Progress Tone Receivers (CPTR), reside on the following circuit packs:

- TN748 all suffixes (mu-law companding)
- TN420 all suffixes (A-law companding) [G3r V2]

The GPTD port is used to perform level measurements of test tones and to detect call progress tones. Examples of call progress tones are dial tone, ring back, busy, alert, confirmation, and recall dial. The abilities of the GPTD port to perform

level measurements of test tones and to detect call progress tones are essential for maintenance of other circuit packs (for example, Tone-Clock).

The General Purpose Tone Detector Port (CPTR) maintenance object defines a set of tests to ensure that the general purpose tone detection capability of the GPTD port is functioning properly. For all Tone Detector circuit pack level errors (DETR-BD), refer to the XXX-BD (Common Port Circuit Pack) Maintenance documentation.

Hardware Error Log Entries and Test to

General Purpose Tone Detector Port (CPTR) Error Log Entries					
Error Type	**Aux Data**	**Associated Test**	**Alarm Level**	**On/Off Board**	**Test to Clear Value**
0*	0	Any	Any	Any	test port UUCSSpp sh r 1
1	17664	Tone Detector Audit/ Update Test (#43)	MAJOR/ MINOR (a)	ON	test port UUCSSpp r 2
18	0	busyout port UUCSSpp	WARNING	ON	release port UUCSSpp
130 (d)		None	WARNING	ON	test port *UUCSSpp* sh r 2
257 (b)	17666	Tone Detector Audit/ Update Test (#43	MAJOR/ MINOR (a)	ON	test port UUCSSpp r 3
513 (c)	Any	Tone Detection Verification Test (#42	MAJOR/ MINOR (a)	ON	test port UUCSSpp r 3

* Run the Short Test Sequence first. If all tests pass, run the Long Test Sequence. Refer to the appropriate test description and follow the recommended procedures.

Notes:

a. A Major or a Minor alarm may be logged with this error. A Major alarm is raised when the total number of GPTD ports currently in service is less than or equal to 1/2 of the threshold number administered via the **change system-paramteres maintenance** command. Otherwise a Minor alarm is raised. In either case, run the Short Test Sequence on the alarmed GPTD port and follow procedures for the individual test results.

b. The GPTD port lost its translation. Testing the GPTD port is sufficient to reload its translation. If testing the GPTD port does not clear the error, then replace the Tone Detector circuit pack containing the defective GPTD port.

c. This error indicates the GPTD port is having problems detecting call progress tones. If this error is logged constantly, replace the Tone Detector circuit pack containing the defective GPTD port.

d. This error type indicates that the circuit pack has been removed or has been insane for at least 11 minutes. To clear the error, reinsert or replace the circuit pack.

System Technician-Demanded Tests: Descriptions and Error Codes

Always investigate tests in the order presented below when inspecting errors in the system. By clearing error codes associated with the *Tone Detection Verification Test,* for example, you may also clear errors generated from other tests in the testing sequence.

Order of Investigation	Short Test Sequence	Long Test Sequence	D/ND*
Tone Detection Verification Test (#42)	X	X	ND
Tone Detector Audit/Update Test (#43)	X	X	ND

* D = Destructive; ND = Nondestructive

Tone Detection Verification Test (#42)

This test verifies that the call progress tones detection and the tone level measurement capabilities of the GPTD port are functioning properly.

Table 9-184. TEST #42 Tone Detection Verification Test

Error Code	Test Result	Description/ Recommendation
	ABORT	The system was not able to allocate all the resources needed for this test or there was an Internal System Error.
1	ABORT	The system could not allocate all the resources needed to test the call progress tones.
1001	ABORT	The system was unable to put the GPTD port in the appropriate mode to test it.
1002	ABORT	The system could not allocate time slots for the test connection. This can happen when the system is heavily loaded. If the system is not heavily loaded, then test the TDM-BUS via the **test tdm [1|2]** command. Refer to the TDM-BUS (TDM Bus) Maintenance documentation for details. 1. Retry the command at 1-minute intervals a maximum of 5 times. 2. If the test continues to abort, escalate the problem.

Continued on next page

Table 9-184. TEST #42 Tone Detection Verification Test — *Continued*

Error Code	Test Result	Description/ Recommendation
1003	ABORT	The system could not allocate a Tone-Clock for the test connection. This may be caused by a heavy load on the system or by a faulted Tone-Clock. 1. Check to see if there are any alarms against the Tone-Clock in the port network where the test aborted. If so refer to the recommended procedures for TONE-BD or TONE-PT. 2. If a new Tone-Clock has been inserted, allow about 1 minute for maintenance to run on the newly inserted circuit pack. 3. Retry the command at 1-minute intervals a maximum of 5 times. 4. If the test continues to abort, escalate the problem.
2000	ABORT	Response to the test request was not received within the allowable time period. 1. Retry the command at 1-minute intervals a maximum of 5 times. 2. If the test continues to abort, escalate the problem.
2006	ABORT	The active Tone-Clock circuit pack or a Tone Detector circuit pack may not be functioning properly. On G3r V2 systems, this abort can also be caused by a mismatch between the companding mode administered for the system and that of the Tone Detector circuit pack. 1. [G3r V2] Make sure that the companding mode of the system matches that of the Tone Detector: mu-law for TN748; A-law for TN420. 2. Test the *active* Tone-Clock circuit pack in the port network with the **test tone-clock** UUC command and refer to the TONE-BD section for failures. 3. Retry the command at 1-minute intervals up to 5 times. 4. If the test continues to abort, escalate the problem.

Continued on next page

Table 9-184. TEST #42 Tone Detection Verification Test — *Continued*

Error Code	Test Result	Description/ Recommendation
2100	ABORT	Could not allocate the necessary system resources to run this test. Retry the command at 1-minute intervals a maximum of 5 times. If the test continues to abort, escalate the problem.
101-122	FAIL	1. Run the Short Test Sequence: **test port UUCSSpp short repeat 1**. 2. If the problem persists, the system is still operating properly but system capacity will be reduced. To restore the system performance to normal, replace the Tone Detector circuit pack containing the defective GPTD port.
1022	FAIL	[G3r V2] Tone detection for the system is administered as part of a wideband configuration, and the Tone Detector is not a TN420C (the only circuit pack with this capability). GPTD ports on other types of Tone Detector circuit packs are taken out of service since they cannot provide the administered function. 1. Change the tone-detection mode administered on the system-parameters country-options form (see *DEFINITY Communications System Generic 3i Implementation*, 555-230-651), or remove all non-TN420C tone detector circuit packs from the system.
	PASS	Tone Detection Verification is successful. The GPTD port is able to detect all call progress tones and perform level measurements of test tones.

Tone Detector Audit/Update Test (#43)

The GPTD port is refreshed with all time slot information and sanity audit is performed on the GPTD port

Table 9-185. TEST #43 Tone Detector Audit/Update Test

Error Code	Test Result	Description/ Recommendation
	ABORT	The system was not able to allocate all the resources needed for this test. 1. Wait 1 minute and try again.
2000	ABORT	Response to the test request was not received within the allowable time period.
2100	ABORT	Could not allocate the necessary system resources to run this test. 1. Retry the command at 1-minute intervals a maximum of 5 times. 2. If the test continues to abort, escalate the problem.
	FAIL	Hardware audit failed. 1. Run the Short Test Sequence: **test port UUCSSpp short repeat 1**. 2. If the problem persists, the system is still operating properly but system capacity will be reduced. To restore the system performance to normal, replace the Tone Detector circuit pack containing the defective GPTD port.
	PASS	The GPTD port has been successfully refreshed with its translation.

Maintenance Object Repair Procedures
H-ADAPTR to HBY-LINE

H

H-ADAPTR (MSS Host Adapter)

MO Name As It Appears in Alarm Log	Alarm Level	Initial System Technician Command to Run (a)	Full Name of MO
H-ADAPTR	MINOR	test host-adapter a|b long	MSS Host Adapter
H-ADAPTR	WARNING	test host-adapter a|b long	MSS Host Adapter

a. In a system with a simplex SPE, the carrier need not be specified. In a system with duplicated SPE s, carrier a or b must be specified.

The Host Adapter circuit is located on the UN332 Mass Storage System/Network Control circuit pack (MSSNET) and is part of the Mass Storage System (MSS). The MSS provides non-volatile tape and disk storage for booting the PBX system and for saving system translation data.

The Host Adapter circuit provides the interface between the Switch Processing Element (SPE) system bus and the Small Computer System Interface (SCSI) bus. The SCSI bus is an industry standard bus that connects a tape drive and disk drive to the PBX.

The Host Adapter contains firmware that interprets commands from the SPE and issues SCSI commands to the tape and disk drives. It also provides diagnostic tests for the all components of the MSS and records error conditions related to the SCSI bus.

The Host Adapter circuit is located on the MSSNET circuit pack which also contains the Switch Control (SW-CTL) circuit. The Switch Control acts as the interface between the SPE and the port circuit packs in the processor port network. Note that the red LED on the MSSNET board is shared by both the Switch Control and Host Adapter circuits. A failure of either circuit will cause that LED to light. In addition, a reset of the Host Adapter will also cause this LED to light. A separate maintenance object (SW-CTL) and its associated tests are used for maintenance of the Switch Control circuit.

The tape and disk drives are treated as separate, but related, maintenance objects (TAPE and DISK). Problems with the Host Adapter may affect the operation of the Tape and Disk circuit packs.

Whenever the Host Adapter is taken out of service because of a failure of a critical Host Adapter test, or by use of the **busyout** command, the TAPE and DISK maintenance objects are also placed in an out-of-service state.

In a system with duplicated SPE s the tests run on the standby Host Adapter Circuit are identical to those run on the active Host Adapter Circuit. The DUPINT circuit pack handles communications between the active and standby SPE s for both the control channel and memory shadowing. Therefore, problems with the DUPINT circuit pack may affect maintenance tests of the standby Host Adapter circuit pack.

Circuit Pack Replacement Procedures

If the MSSNET circuit pack which contains the Host Adapter circuit needs to be replaced, follow the procedures given below:

1. If the SPE is not duplicated:
    a. Power down the SPE carrier by removing the power plugs from the power supplies on the extreme right and left sides of the carrier.
    b. Replace the MSSNET circuit pack.
    c. Power up the SPE carrier by inserting the power plugs into the power supplies on the extreme right and left sides of the carrier.
    d. Wait for the system to reboot.
    e. Test the MSSNET circuit pack using the **test mssnet long** command.
    f. Verify that the tape and disk are in service by issuing the **status spe** command.
2. If the SPE is duplicated:
    a. Refer to "Replacing SPE Circuit Packs" in Chapter 5, 'Responding to Alarms and Errors".

b. After the standby SPE is powered up and fully refreshed, test the standby MSSNET circuit pack using the **test mssnet long command.**

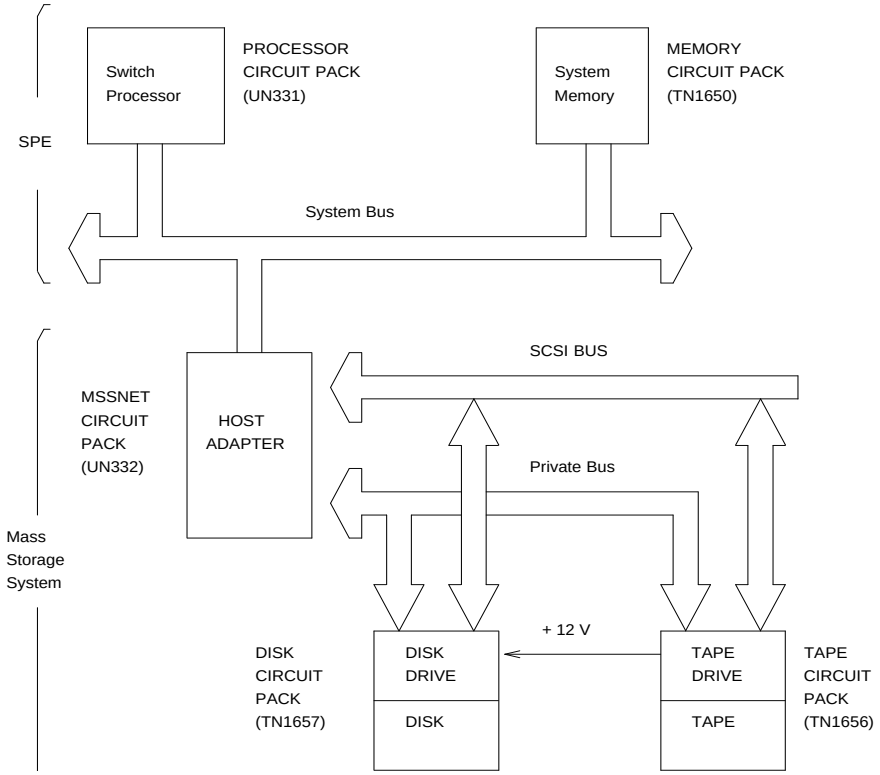

Figure 9-51. Mass Storage System Interactions

Hardware Error Log Entries and Test to Clear Values

Host Adapter Error Log Entries					
Error Type	**Aux Data ****	**Associated Test**	**Alarm Level**	**On/Off Board**	**Test to Clear Value**
1(a)	any	Host Adapter Hdwr Reset (#820)	MINOR	ON	test host-ad a|b* l
18 (b)	0	Busyout host-ad	WARNING	OFF	rel host-ad a|b*
257(c)	any	Host Adapter Diag (#823)	WARNING	ON	test host-ad a|b* l r 3
513(d)	any	Host Adapter Diag (#823)	MINOR	ON	test host-ad a|b* l r 3
529(e)	0	Host Adapter Reset (#893)	WARNING	ON	reset host-ad a|b*
769(f)	any	Host Adapter Loop Around (#824)	MINOR	OFF	test host-ad a|b* sh r 2
1281(g)	any	Host Adapter Diag (#823)	MINOR	OFF	test host-ad a|b* l r 2
1793(h)	any	Host Adapter Diag (#823)	MINOR	OFF	test host-ad a|b* l r 2
2049(i)	any	Host Adapter Diag (#823)	MINOR	ON	test host-ad a|b* l r 2
2305(j)	any	Host Adapter Diag (#823)	MINOR	ON	test host-ad a|b* l r 2
2561(k)	any	Host Adapter Diag (#823)	MINOR	ON	test host-ad a|b* l r 2
2817(l)	any	Host Adapter Hdwr Reset (#820)	MINOR	ON	test host-ad a|b* l 2
3073(m)	any	Host Adapter Status (#825)	WARNING	OFF	test host-ad a|b* sh 2
3329(n)	any	Host Adapter Hdwr Reset (#820)	WARNING	OFF	test host-ad a|b l r 4
3585(o)	any	In line errors	MINOR	ON	test host-ad a|b* l r 2
3841(p)	**	Miscellaneous	WARNING	OFF	test host-ad a|b* l r 1

* In a system with a simplex SPE, the carrier does not have to be specified. In a system with duplicated SPE, the carrier (a or b) must be specified.

** If error type 3585 with aux data of 5302 is present, this field will have the out of service cause data. See Table 9-372 on page T-49, “MSS Error Actions,” at the end of the section on TAPE.

The *Service State* field in the alarm log refers to the accessibility of the device. IN (in service) means that users can access the device and all maintenance tests will run. MTC (maintenance busy) means that the device is busied out; users cannot access it, but all maintenance tests will run. OUT (out of service) means that users cannot access the device and background testing will not run. Demand testing may or may not run depending on the severity of the error.

Notes:

a. Error type 1 indicates that the host adapter hardware is in a "held reset" state.

b. Error type 18 indicates that the host adapter has been "busied out."

c. Error type 257 indicates that non-critical host adapter diagnostics failed.

d. Error type 513 indicates that critical host adapter diagnostics failed.

e. Error type 529 indicates that the Host Adapter Reset (#820 or #893) failed or that the hardware is in a "held reset" state.

f. Error type 769 indicates that the Host Adapter Loop Around Test (#824) failed.

g. Error type 1281 indicates that the host adapter detected a processor bus error.

h. Error type 1793 indicates that the host adapter could not access SCSI memory.

i. Error type 2049 indicates that the host adapter detected an illegal command or a command was aborted.

j. Error type 2305 indicates that the host adapter detected an internal firmware or OS software error.

k. Error type 2561 indicates that the host adapter detected an interrupt or exception.

l. Error type 2817 indicates that the host adapter detected a flash prom programming error.

m. Error type 3073 indicates that the Host Adapter Status Test (#825) detected an error in the host adapter configuration status or in the LED status test. See Table 9-372 on page T-49, “MSS Error Actions,” at the end of the section on TAPE.

n. Error type 3329 indicates internal host adapter software errors.

o. Error type 3585 indicates in-line errors reported by the host adapter firmware. See Table 9-372 on page T-49, “MSS Error Actions,” at the end of the section on TAPE.

p. Error type 3841 is used to record miscellaneous data when an out-of-service condition occurs. See Table 9-372 on page T-49, “MSS Error Actions,” at the end of the section on TAPE.

System Technician-Demanded Tests: Descriptions and Error Codes

Always investigate tests in the order presented in the table below when inspecting errors in the system. By clearing error codes associated with the *Host Adapter Diagnostic Test*, for example, you may also clear errors generated from other tests in the testing sequence.

Order of Investigation	Short Test Sequence	Long Test Sequence	Reset Board Sequence	D/ND*
Host Adapter Reset Test (#820)		X		ND
Host Adapter Diagnostic Test (#823)	X	X		ND
Host Adapter Loop Around Test (#824)	X	X		ND
Host Adapter Status Test (#825)	X	X		ND
Host Adapter Firmware Error Counters	X	X		ND
Read and Clear Test (#822)				
Host Adapter Reset (#893)			X	ND

* D = Destructive; ND = Nondestructive

Host Adapter Reset Test (#820 and #893)

The Reset Test #820 resets the Host Adapter circuit on the MSSNET circuit pack and runs an initialization test. The initialization test is similar to the Diagnostic Test #823 with two exceptions: a test is run on the Host Adapter dual port RAM during the reset test and a test involving system bus mastership is run during the diagnostic test.

The reset test can be run in two ways: as a part of the long host adapter test sequence (**test host-adapter long**) or as a result of the reset host adapter command (**reset host-adapter**). Failure of the reset command will cause the Host Adapter to be placed in an internal "held reset" state. In this state the Host Adapter will not run any background maintenance and will not respond to any commands except a reset command. The only way to restore the host adapter to service is for it to pass the reset command. Demand tests will not run until then.

If the reset test is requested as part of the long host adapter test sequence, failure of the test will cause the host adapter to be placed in a software "out-of-service" state. From this state the host adapter can be restored to service by either passing the long host adapter test sequence the proper number of times or by passing the reset command. Refer to "Host Adapter Diagnostic Test (#823)" on page H-17 for a more complete description of the test coverage.

Table 9-186. TEST #820/#893 Host Adapter Reset Test

Error Code	Test Result	Description/ Recommendation
1316	ABORT	Could not allocate the Mass Storage System to run this test. Other application software may be using it or background maintenance tests may be running. 1. Retry the command at 1 minute intervals for a maximum of 5 retries. 2. If the test continues to abort, verify that the daily translation-save operation is not in progress (issue the **display system-parameters maintenance** command to display the time for scheduled maintenance and the "y/n" option for saving translation daily). If not, follow normal escalation procedures.

Continued on next page

Table 9-186. TEST #820/#893 Host Adapter Reset Test — *Continued*

Error Code	Test Result	Description/ Recommendation
1335	ABORT	Could not run the test on the Standby SPE—Duplication not administered. 1. Refer to the documentation for STBY-SPE maintenance. 2. Administer standby present. 3. If the test continues to abort, follow normal escalation procedures.
1338	ABORT	Could not run the test on the Standby SPE—Interchange pending. 1. Refer to the documentation for STBY-SPE maintenance. 2. After interchange occurs, run test on new active SPE. 3. If the test continues to abort, follow normal escalation procedures.
1339	ABORT	Could not run the test on the Standby SPE—Handshake down. 1. Refer to the documentation for STBY-SPE maintenance. 2. When the standby is restored to service (use **status spe** to determine state of standby) retry the command. 3. If the test continues to abort, follow normal escalation procedures.
1347	ABORT	Could not run the test on the Standby SPE—Refresh not complete. 1. When the standby is restored to service (use **status spe** to determine state of standby) retry the command. 2. If the test continues to abort, follow normal escalation procedures.

Continued on next page

Table 9-186. TEST #820/#893 Host Adapter Reset Test — *Continued*

Error Code	Test Result	Description/ Recommendation
1350	ABORT	Could not run the test on the Standby SPE—Shadowing not enabled. 1. When the standby is restored to service (use **status spe** to determine state of standby) retry the command. 2. If the test continues to abort, follow normal escalation procedures.
2000	ABORT	Response to the test request was not received within the allowable time period. 1. Retry the command at 1 minute intervals for a maximum of 5 retries. 2. If the test continues to abort, follow normal escalation procedures.
2500	ABORT	Could not run the test on the Standby SPE—Internal software error. 1. Retry the command at 1 minute intervals for a maximum of 5 retries. 2. If the test continues to abort, follow normal escalation procedures.
5102	ABORT	Could not allocate the Mass Storage System to run this test 1. Retry the command at 1 minute intervals for a maximum of 5 retries. 2. If the test continues to abort, verify that the daily translation-save operation is not in progress (issue the **display system-parameters maintenance** command to display the time for scheduled maintenance and the "y/n" option for saving translation daily). If not, follow normal escalation procedures.

Continued on next page

Table 9-186. TEST #820/#893 Host Adapter Reset Test — *Continued*

Error Code	Test Result	Description/ Recommendation
	NO BOARD	The host adapter has been placed in the "uninstalled" state. 1. Verify that the host adapter is fully inserted and powered up. 2. Attempt a demand reset of the host adapter. 3. If the reset fails, follow normal escalation procedures.
**	FAIL	The Host Adapter could not be reset successfully. 1. Retry the command after 1 minute. 2. If the test fails, issue the **reset host-adapter** command. 3. If the command fails, replace the MSSNET circuit pack (see "Circuit Pack Replacement Procedures" on page H-2) and issue the **test mssnet long** command. 4. If the test continues to fail, follow normal escalation procedures.
	PASS	The Host Adapter was reset correctly. Check results of other tests to see if it is operating correctly.

Host Adapter Read and Clear Firmware Error Counters Test (#822)

The host adapter firmware constantly executes background testing of the host adapter hardware. If any irregularities are detected, counters in dual port RAM are incremented. The Read and Clear Firmware Error Counters test reads these counters from the host adapter dual port RAM and increments the appropriate software counters based on which ones are non-zero. The dual port RAM counters are then cleared.

The firmware maintains sixteen counters that record the following errors:

- Unexpected interrupt from the SCSI Bus Interface Controller Chip (SBICC).
- SBICC timed out during SCSI command.
- Direct Memory Access Controller (DMAC) generated error interrupt.
- DMAC timed out without interrupt.
- Universal Synchronous/Asynchronous Receiver/Transmitter (USART) diagnostics failed.
- Host adapter LED test failed.
- Tape LED test failed.
- Disk LED test failed.
- Processor bus dual port RAM test failed.
- Processor bus IO registers test failed.
- External host adapter loop around failed.
- Illegal SCSI target controller requested.
- Interrupt during processor bus access.
- Bus timeout during processor bus access.
- Parity error during processor bus access.
- Error Detection and Correction (EDC) error during processor bus access.

Table 9-187. TEST #822 Host Adapter Read and Clear Firmware Error Counters Test

Error Code	Test Result	Description/ Recommendation
1311	ABORT	Could not read the firmware error counters 1. Retry the command at 1 minute intervals for a maximum of 5 retries. 2. If the test continues to abort, follow normal escalation procedures.
1316	ABORT	Could not allocate the Mass Storage System to run this test. Other application software may be using it or background maintenance tests may be running. 1. Retry the command at 1 minute intervals for a maximum of 5 retries. 2. If the test continues to abort, verify that the daily translation-save operation is not in progress (issue the **display system-parameters maintenance** command to display the time for scheduled maintenance and the "y/n" option for saving translation daily). If this is not the case, follow normal escalation procedures.
1335	ABORT	Could not run the test on the Standby SPE—Duplication not administered. 1. Refer to the documentation for STBY-SPE maintenance. 2. Administer standby present. 3. If the test continues to abort, follow normal escalation procedures.
1338	ABORT	Could not run the test on the Standby SPE—Interchange pending. 1. Refer to the documentation for STBY-SPE maintenance. 2. After interchange occurs, run test on new active SPE. 3. If the test continues to abort, follow normal escalation procedures.

Continued on next page

Table 9-187. TEST #822 Host Adapter Read and Clear Firmware Error Counters Test — *Continued*

Error Code	Test Result	Description/ Recommendation
1339	ABORT	Could not run the test on the Standby SPE—Handshake down. 1. Refer to the documentation for STBY-SPE maintenance. 2. When the standby is restored to service (use **status spe** to determine state of standby) retry the command. 3. If the test continues to abort, follow normal escalation procedures.
1347	ABORT	Could not run the test on the Standby SPE—Refresh not complete. 1. When the standby is restored to service (use **status spe** to determine state of standby) retry the command. 2. If the test continues to abort, follow normal escalation procedures.
1350	ABORT	Could not run the test on the Standby SPE—Shadowing not enabled. 1. When the standby is restored to service (use **status spe** to determine state of standby) retry the command. 2. If the test continues to abort, follow normal escalation procedures.
2000	ABORT	Response to the test request was not received within the allowable time period. 1. Retry the command at 1 minute intervals for a maximum of 5 retries. 2. If the test continues to abort, follow normal escalation procedures.

Continued on next page

Table 9-187. TEST #822 Host Adapter Read and Clear Firmware Error Counters Test — *Continued*

Error Code	Test Result	Description/ Recommendation
2500	ABORT	Could not run the test on the Standby SPE—Internal software error. 1. Retry the command at 1 minute intervals for a maximum of 5 retries. 2. If the test continues to abort, follow normal escalation procedures.
5102	ABORT	Could not allocate the Mass Storage System to run this test 1. Retry the command at 1 minute intervals for a maximum of 5 retries. 2. If the test continues to abort, verify that the daily translation-save operation is not in progress (issue the **display system-parameters maintenance** command to display the time for scheduled maintenance and the "y/n" option for saving translation daily). If not, follow normal escalation procedures.
	NO BOARD	The host adapter has been placed in the "uninstalled" state. 1. Verify that the host adapter is fully inserted and powered up. 2. Attempt a demand reset of the host adapter. 3. If the reset fails, follow normal escalation procedures.

Continued on next page

Table 9-187. TEST #822 Host Adapter Read and Clear Firmware Error Counters Test — *Continued*

Error Code	Test Result	Description/ Recommendation
**	FAIL	The Read and Clear Firmware Error Counters test detected a non-zero firmware error counter. 1. Retry the command at 1 minute intervals for a maximum of 5 retries. 2. If the command continues to fail, replace the MSSNET circuit pack (see "Circuit Pack Replacement Procedures" on page H-2) and issue the **test mssnet long** command. 3. If the test continues to fail, follow normal escalation procedures.
	PASS	The Read and Clear Firmware Error Counters test completed successfully without detecting a non-zero firmware error counter. Look at the results of other tests to see if it is operating correctly.

Host Adapter Diagnostic Test (#823)

The Host Adapter Diagnostic test runs a set of non-destructive diagnostic tests for the Host Adapter. This includes tests requiring system bus mastership. Specific tests include:

- Micro processor testing including exception processing
- Private RAM test
- EPROM and FLASHPROM checksum test
- SPE side Dual Port RAM test
- Control and status register test
- System memory access test
- SCSI bus access test
- SCSI memory access test
- Sanity timer test
- SCSI side Dual Port RAM test

A more complete test of the access to the disk and tape drives over the SCSI bus is provided by the DISK and TAPE tests.

Table 9-188. TEST #823 Host Adapter Diagnostic Test

Error Code	Test Result	Description/ Recommendation
1316	ABORT	Could not allocate the Mass Storage System to run this test. Other application software may be using it or background maintenance tests may be running. 1. Retry the command at 1 minute intervals for a maximum of 5 retries. 2. If the test continues to abort, verify that the daily translation-save operation is not in progress (issue the **display system-parameters maintenance** command to display the time for scheduled maintenance and the "y/n" option for saving translation daily). If this is not the case, follow normal escalation procedures.
1335	ABORT	Could not run the test on the Standby SPE—Duplication not administered. 1. Refer to the documentation for STBY-SPE maintenance. 2. Administer standby present. 3. If the test continues to abort, follow normal escalation procedures.
1338	ABORT	Could not run the test on the Standby SPE—Interchange pending. 1. Refer to the documentation for STBY-SPE maintenance. 2. After interchange occurs, run test on new active SPE. 3. If the test continues to abort, follow normal escalation procedures.

Continued on next page

Table 9-188. TEST #823 Host Adapter Diagnostic Test — *Continued*

Error Code	Test Result	Description/ Recommendation
1339	ABORT	Could not run the test on the Standby SPE—Handshake down. 1. Refer to the documentation for STBY-SPE maintenance. 2. When the standby is restored to service (use **status spe** to determine state of standby) retry the command. 3. If the test continues to abort, follow normal escalation procedures.
1347	ABORT	Could not run the test on the Standby SPE—Refresh not complete. 1. When the standby is restored to service (use **status spe** to determine state of standby) retry the command. 2. If the test continues to abort, follow normal escalation procedures.
1350	ABORT	Could not run the test on the Standby SPE—Shadowing not enabled. 1. When the standby is restored to service (use **status spe** to determine state of standby) retry the command. 2. If the test continues to abort, follow normal escalation procedures.
2000	ABORT	Response to the test request was not received within the allowable time period. 1. Retry the command at 1 minute intervals for a maximum of 5 retries. 2. If the test continues to abort, follow normal escalation procedures.

Continued on next page

Table 9-188. TEST #823 Host Adapter Diagnostic Test — *Continued*

Error Code	Test Result	Description/ Recommendation
2500	ABORT	Could not run the test on the Standby SPE—Internal software error. 1. Retry the command at 1 minute intervals for a maximum of 5 retries. 2. If the test continues to abort, follow normal escalation procedures.
5102	ABORT	Could not allocate the Mass Storage System to run this test 1. Retry the command at 1 minute intervals for a maximum of 5 retries. 2. If the test continues to abort, verify that the daily translation-save operation is not in progress (issue the **display system-parameters maintenance** command to display the time for scheduled maintenance and the "y/n" option for saving translation daily). If not, follow normal escalation procedures.
	NO BOARD	The host adapter has been placed in the "uninstalled" state. 1. Verify that the host adapter is fully inserted and powered up. 2. Attempt a demand reset of the host adapter. 3. If the reset fails, follow normal escalation procedures.
**	FAIL	The Host Adapter Diagnostic test could not be run successfully. 1. Replace the MSSNET circuit pack (see"Circuit Pack Replacement Procedures" on page H-2) and issue the **test mssnet long** command. 2. If the test continues to fail, follow normal escalation procedures.
	PASS	The Host Adapter Diagnostic Test completed successfully. Look at the results of other tests to see if it is operating correctly.

Host Adapter Loop Around Test (#824)

The Host Adapter Loop Around test provides a partial functional test which verifies that the Host Adapter can perform data transfer functions.

This test performs two subtests:

- Internal loop-around test

  Data is generated in the Host Adapters private RAM, copied to the SCSI Data Memory area (as would be done for a data transfer from system memory), and copied back to RAM where it is compared with the original test data.

- External loop-around test

  This test is similar to the internal loop around test except the data originates in the Host Adapter's Dual Port RAM and is copied to and from the SSCI Data Memory using SPE system bus accesses. Only a small amount of data is copied for this test in order to minimize bus contention.

Note that this test is entirely contained in the host adapter and does not test access to the system.

Table 9-189. TEST #824 Host Adapter Loop Around Test

Error Code	Test Result	Description/ Recommendation
1316	ABORT	Could not allocate the Mass Storage System to run this test. Other application software may be using it or background maintenance tests may be running. 1. Retry the command at 1 minute intervals for a maximum of 5 retries. 2. If the test continues to abort, verify that the daily translation-save operation is not in progress (issue the **display system-parameters maintenance** command to display the time for scheduled maintenance and the "y/n" option for saving translation daily). If this is not the case, follow normal escalation procedures.
1335	ABORT	Could not run the test on the Standby SPE—Duplication not administered. 1. Refer to the documentation for STBY-SPE maintenance. 2. Administer standby present. 3. If the test continues to abort, follow normal escalation procedures.
1338	ABORT	Could not run the test on the Standby SPE—Interchange pending. 1. Refer to the documentation for STBY-SPE maintenance. 2. After interchange occurs, run test on new active SPE. 3) If the test continues to abort, follow normal escalation procedures.
1339	ABORT	Could not run the test on the Standby SPE—Handshake down. 1. Refer to the documentation for STBY-SPE maintenance. 2. When the standby is restored to service (use **status spe** to determine state of standby) retry the command. 3. If the test continues to abort, follow normal escalation procedures.

Continued on next page

Table 9-189. TEST #824 Host Adapter Loop Around Test — *Continued*

Error Code	Test Result	Description/ Recommendation
1347	ABORT	Could not run the test on the Standby SPE—Refresh not complete. 1. When the standby is restored to service (use **status spe** to determine state of standby) retry the command. 2. If the test continues to abort, follow normal escalation procedures.
1350	ABORT	Could not run the test on the Standby SPE—Shadowing not enabled. 1. When the standby is restored to service (use **status spe** to determine state of standby) retry the command. 2. If the test continues to abort, follow normal escalation procedures.
2000	ABORT	Response to the test request was not received within the allowable time period. 1. Retry the command at 1 minute intervals for a maximum of 5 retries. 2. If the test continues to abort, follow normal escalation procedures.
2500	ABORT	Could not run the test on the Standby SPE—Internal software error. 1. Retry the command at 1 minute intervals for a maximum of 5 retries. 2. If the test continues to abort, follow normal escalation procedures.

Continued on next page

Table 9-189. TEST #824 Host Adapter Loop Around Test — *Continued*

Error Code	Test Result	Description/ Recommendation
5102	ABORT	Could not allocate the Mass Storage System to run this test 1. Retry the command at 1 minute intervals for a maximum of 5 retries. 2. If the test continues to abort, verify that the daily translation-save operation is not in progress (issue the **display system-parameters maintenance** command to display the time for scheduled maintenance and the "y/n" option for saving translation daily). If not, follow normal escalation procedures.
	NO BOARD	The host adapter has been placed in the "uninstalled" state. 1. Verify that the host adapter is fully inserted and powered up. 2. Attempt a demand reset of the host adapter. 3. If the reset fails, follow normal escalation procedures.
**	FAIL	The Host Adapter Loop Around test could not be run successfully. 1. Replace the MSSNET circuit pack (see "Circuit Pack Replacement Procedures" on page H-2) and issue the **test mssnet long** command. 2. If the test continues to fail, follow normal escalation procedures.
	PASS	The Host Adapter Loop Around Test completed successfully. Look at the results of other tests to see if it is operating correctly.

Host Adapter Status Test (#825)

This test verifies the following Host Adapter circuit operations:

- The LED s on the MSSNET circuit pack can be turned on and off correctly.

  Note that this only verifies that the control and status logic for the LED s is operating correctly. The operation of the LED s may be tested visually by using the **test led** command.

- The MSS configuration information is correct, i.e., the host adapter is not in the "held reset" state.

Table 9-190. TEST #825 Host Adapter Status Test

Error Code	Test Result	Description/ Recommendation
1312 1313 1314	ABORT	Internal software error between maintenance software and mss driver. 1. Retry the command at 1 minute intervals for a maximum of 5 retries. 2. If the test continues to abort, follow normal escalation procedures.
1316	ABORT	Could not allocate the Mass Storage System to run this test. Other application software may be using it or background maintenance tests may be running. 1. Retry the command at 1 minute intervals for a maximum of 5 retries. 2. If the test continues to abort, verify that the daily translation-save operation is not in progress (issue the **display system-parameters maintenance** command to display the time for scheduled maintenance and the "y/n" option for saving translation daily). If this is not the case, follow normal escalation procedures.
1335	ABORT	Could not run the test on the Standby SPE—Duplication not administered. 1. Refer to the documentation for STBY-SPE maintenance. 2. Administer standby present. 3. If the test continues to abort, follow normal escalation procedures.

Continued on next page

Table 9-190. TEST #825 Host Adapter Status Test — *Continued*

Error Code	Test Result	Description/ Recommendation
1338	ABORT	Could not run the test on the Standby SPE—Interchange pending. 1. Refer to the documentation for STBY-SPE maintenance. 2. After interchange occurs, run test on new active SPE. 3. If the test continues to abort, follow normal escalation procedures.
1339	ABORT	Could not run the test on the Standby SPE—Handshake down. 1. Refer to the documentation for STBY-SPE maintenance. 2. When the standby is restored to service (use **status spe** to determine state of standby) retry the command. 3. If the test continues to abort, follow normal escalation procedures.
1347	ABORT	Could not run the test on the Standby SPE—Refresh not complete. 1. When the standby is restored to service (use **status spe** to determine state of standby) retry the command. 2. If the test continues to abort, follow normal escalation procedures.
1350	ABORT	Could not run the test on the Standby SPE—Shadowing not enabled. 1. When the standby is restored to service (use **status spe** to determine state of standby) retry the command. 2. If the test continues to abort, follow normal escalation procedures.

Continued on next page

Table 9-190. TEST #825 Host Adapter Status Test — *Continued*

Error Code	Test Result	Description/ Recommendation
2000	ABORT	Response to the test request was not received within the allowable time period. 1. Retry the command at 1 minute intervals for a maximum of 5 retries. 2. If the test continues to abort, follow normal escalation procedures.
2500	ABORT	Could not run the test on the Standby SPE—Internal software error 1. Retry the command at 1 minute intervals for a maximum of 5 retries. 2. If the test continues to abort, follow normal escalation procedures.
5102	ABORT	Could not allocate the Mass Storage System to run this test 1. Retry the command at 1 minute intervals for a maximum of 5 retries. 2. If the test continues to abort, verify that the daily translation-save operation is not in progress (issue the **display system-parameters maintenance** command to display the time for scheduled maintenance and the 'y/n' option for saving translation daily). If not, follow normal escalation procedures.
	NO BOARD	The host adapter has been placed in the "uninstalled" state. 1. Verify that the host adapter is fully inserted and powered up. 2. Attempt a demand reset of the host adapter. 3. If the reset fails, follow normal escalation procedures.

Continued on next page

Table 9-190. TEST #825 Host Adapter Status Test — *Continued*

Error Code	Test Result	Description/ Recommendation
**	FAIL	The Host Adapter Status test could not be run successfully. 1. Replace the MSSNET circuit pack (see "Circuit Pack Replacement Procedures" on page H-2) and issue the **test mssnet long** command. 2. If the test continues to fail, follow normal escalation procedures.
	PASS	The Host Adapter Status Test completed successfully. Look at the results of other tests to see if it is operating correctly.

Host Adapter Reset Test (#893)

The Host Adapter Reset Test #893 is run on demand in response to the **reset host-adapter** command. This test resets the Host Adapter circuit on the MSSNET circuit pack and runs an initialization test.

Failure of the reset command will cause the Host Adapter to be placed in an internal "held reset" state. In this state the Host Adapter will not run any background maintenance and will not respond to any commands except a reset command. The only way to restore the host adapter to service is for it to pass the reset command. Demand tests will not run until then.

The test results for Test #893 are the same as those for Test #820. Refer to the information presented for "Host Adapter Reset Test (#820 and #893)" on page H-8 for the appropriate repair procedures.

HYB-BD (Hybrid Line Circuit Pack)

MO Name As It Appears in Alarm Log	Alarm Level	Initial System Technician Command to Run (a)	Full Name of MO
HYB-BD	MIN	test board UUCSS sh	Hybrid Line Circuit Pack
HYB-BD	WRN	test board UUCSS sh	Hybrid Line Circuit Pack

a. UU is the universal cabinet number (1 for PPN, 2 - 44 for EPN s). C is the carrier designation (A, B, C, D, or E). SS is the number of the slot in which the circuit pack resides (01 to 21).

Refer to XXX-BD (Common Port Circuit Pack) Maintenance documentation for circuit pack level errors. See also HYB-LINE (Hybrid Line) Maintenance documentation for related line information.

HYB-LINE (Hybrid Line)

MO Name As It Appears in Alarm Log	Alarm Level	Initial System Technician Command to Run (a)	Full Name of MO
HYB-LINE	Minor	test port UUCSSpp l	Hybrid Line
HYB-LINE	Warning	test port UUCSSpp l	Hybrid Line

a. UU is the universal cabinet number (1 for PPN, 2 - 44 for EPN s). C is the carrier designation (A, B, C, D, or E). SS is the number of the slot in which the circuit pack resides (01 to 21). pp is the two digit port number (01, 02, ...).

Hybrid Line is another term for the Multi-Function Analog Telephone (MFAT). The Hybrid Line set is also known as an SCS (Small Communications System).

The TN762B Hybrid Line circuit pack supports eight of these multifunction analog telephone sets, as shown in Figure 9-52 on page H-32. The Hybrid Line sets use three pairs of wires: an analog voice pair, a transmit/receive pair, and a power pair.

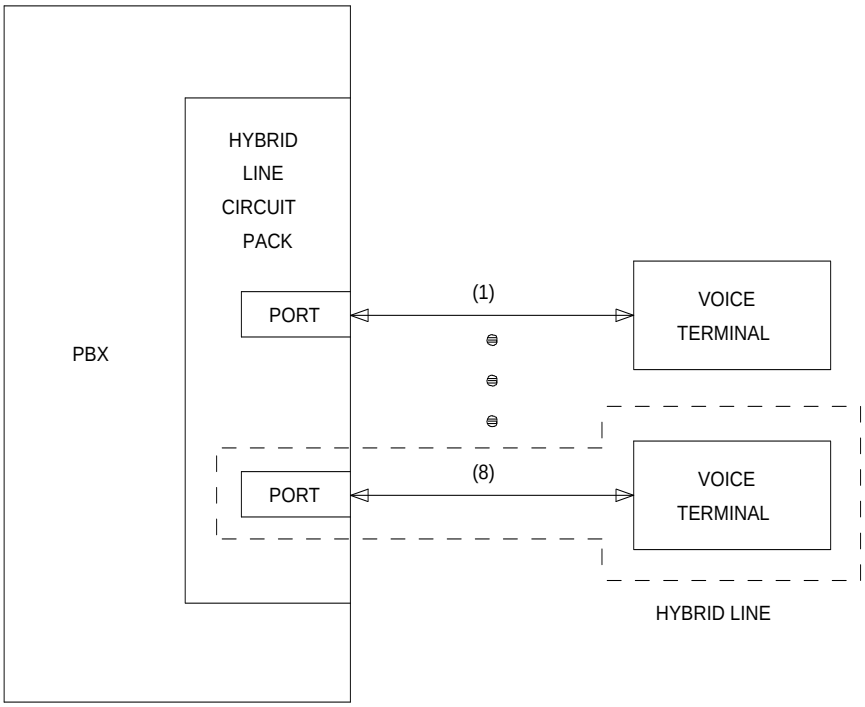

Figure 9-52. Hybrid Station Interactions

This section describes HYB-LINE (Hybrid Line) maintenance. HYB-LINE maintenance is closely related to, and sometimes interacts with, HYB-BD (Hybrid Line circuit pack) maintenance. This interaction should be kept in mind when troubleshooting Hybrid Line problems.

This section occasionally refers to a station's service state. These service states are defined as follows:

Out-of-Service	The port, and thus the station, have been removed from service. A busyout of a port will cause it to be out-of-service.
Ready-for-Service	The port on the circuit pack has been put into service, but the voice terminal has not yet established signaling communications with the port.
In-Service	The voice terminal has established signaling communications with the port, and the system is ready to process calls to and from that station. A terminal in the ready-for-service state will progress to the in-service state if it is functioning normally, but it can also be forced into the in-service state if it goes off-hook.

Use **status station** to determine terminal service state. Status is reported as either out-of-service, in-service, or disconnect. The latter is equivalent to the ready-for-service state.

Hardware Error Log Entries and Test to Clear Values

Hybrid Line Error Log Entries					
Error Type	**Aux Data**	**Associated Test**	**Alarm Level**	**On/Off Board**	**Test to Clear Value**
0*	0	Any	Any	Any	test port UUCSSpp sh r 1
1(a)	40987	None	WARNING	OFF	
15(j)	Any	Hybrid Line Audits Test(#161)			
18(b)	0	busyout port UUCSSpp	WARNING	OFF	release port UUCSSpp
130(c)		None	WARNING	ON	test port UUCSSpp sh
257(d)	40988	None	MIN/WRN**	OFF	
513(e)	40965	Hybrid Line Audits Test (#61)	WARNING	OFF	test port UUCSSpp sh r 4
769(f)		Remote Dig Loop Around Test (#59)	WARNING	OFF	test port UUCSSpp sh r 3
1025		Hybrid & Conf. Circuits Test (#57)	MIN/WRN**	ON	test port UUCSSpp l r 3
1281(f)		Local Digital Loop Around Test (#58)	WARNING	ON	test port UUCSSpp l r 3
1537(g)	40968	None	WARNING	OFF	
1793		TDM NPE Crosstalk Test (#6	MIN/WRN†	ON	test port UUCSSpp l r 3
2049(h)	32770	None			
2049(i)	40967	None			

* Run the Short Test Sequence first. If all tests pass, run the Long Test Sequence. Refer to the appropriate test description and follow the recommended procedures.

† Major or minor alarms on this MO may be downgraded to Warning alarms based on the value used in the set options command.

Notes:

a. The data link between the port and the terminal is not operational. (An off-board problem was detected by port circuit). Verify that the Hybrid set is connected and that the Electronic Power Feed (EPF) test passes. If data transmission problems are experienced, check for defective wiring or a defective voice terminal, or move terminal closer to the switch (reduce the length of the wiring between the terminal and the switch). If the problem persists, replace the circuit pack. Once the problem has been resolved, the alarm will be retired after a predetermined delay.

b. Error type 18 indicates the port is busied out. The port is released with **release port** UUCSSpp.

c. The circuit pack has been removed or has been insane for more than 11 minutes. To clear the error, reinsert or replace the circuit pack.

d. The EPF has been turned off due to an overcurrent condition at the voice terminal. Check for defective wiring or a damaged jack, and make sure the voice terminal is a Hybrid set. Once the problem has been resolved, the alarm will be retired after a predetermined delay.

e. The voice terminal has been disconnected or there is a problem in the wiring to the terminal. Make sure that the voice terminal is connected or check for defective wiring to the voice terminal.

f. Note that Error Types 769 and 1281 by themselves create Warning alarms only, but if both are present, a Minor alarm will be logged.

g. The port has reported a problem with the data link to the voice terminal. Ignore this error if there are no complaints about the voice terminal. Otherwise, make sure the voice terminal is connected, check for defective wiring, check for a defective voice terminal, and decrease the length of the wiring between the voice terminal and the switch. If the problem persists, replace the circuit pack.

h. The voice terminal went off-hook while in the disconnect state. Use the **status station** command to determine the state of the terminal. The off-hook should have moved the terminal to in-service. No repair action is necessary.

i. The link between the circuit pack and the voice terminal has been successfully reset. No repair action is necessary.

j. Error 15 indicates a software audit error that does not indicate any hardware malfunction. Run the short test sequence and investigate any errors.

System Technician-Demanded Tests: Descriptions and Error Codes

Always investigate tests in the order presented in the table below when inspecting errors in the system. By clearing error codes associated with the *Local Digital Loop Around Test,* for example, you may also clear errors generated from other tests in the testing sequence.

Order of Investigation	Short Test Sequence	Long Test Sequence	D/ND*
Local Digital Loop Around Test (#58)		X	ND
NPE Crosstalk Test (#6)		X	ND
Hybrid Electronic Power Feed Test (#56)		X	ND
Hybrid Circuit and Conference Circuit Test (#57)		X	ND
Remote Digital Loop Around Test (#59)	X	X	ND
Station Lamp Update Test (#60)	X	X	ND
Station Audits Test (#61)	X	X	ND
Ringer Update Test (#62)	X	X	ND

* D = Destructive; ND = Nondestructive

NPE Crosstalk Test (#6)

One or more Network Processing Elements (NPE s) reside on each circuit pack with a TDM Bus interface. The NPE controls port connectivity and gain, and provides conferencing functions on a per port basis. The NPE Crosstalk Test verifies that this port's NPE channel talks on the selected time slot and never crosses over to time slots reserved for other connections. If the NPE is not working correctly, one-way and noisy connections may be observed. This test is part of a port's Long Test Sequence and takes about 20 to 30 seconds to complete.

Table 9-191. TEST #6 NPE Crosstalk Test

Error Code	Test Result	Description/ Recommendation
	ABORT	Could not allocate the necessary system resources to run this test. 1. Retry the command at 1-minute intervals a maximum of 5 times. 2. If the test continues to abort, escalate the problem.
1000	ABORT	System resources required to run this test are not available. The port may be busy with a valid call. Use the **display port UUCSSpp** command to determine the station extension number of the port. Use the **status station** command to determine the service state of the port. If the service state indicates that the port is in use, then the port is unavailable for certain tests. (See Chapter 8, "Maintenance Commands", for a full description of all possible states.) You must wait until the port is idle before retesting. 1. If the port status is idle, then retry the command at 1-minute intervals a maximum of 5 times. 2. If the test continues to abort, escalate the problem.
1001	ABORT	Could not allocate the necessary system resources to run this test. 1. Retry the command at 1-minute intervals a maximum of 5 times. 2. If the test continues to abort, escalate the problem.

Continued on next page

Table 9-191. TEST #6 NPE Crosstalk Test — *Continued*

Error Code	Test Result	Description/ Recommendation
1002	ABORT	The system could not allocate time slots for the test. The system may be under heavy traffic conditions or it may have time slots out-of-service due to TDM-BUS errors. Refer to TDM-BUS (TDM Bus) Maintenance documentation to diagnose any active TDM-BUS errors. 1. If system has no TDM-BUS errors and is not handling heavy traffic, repeat test at 1-minute intervals a maximum of 5 times. 2. If the test continues to abort, escalate the problem.
1003	ABORT	The system could not allocate a tone receiver for the test. The system may be oversized for the number of Tone Detectors present or some Tone Detectors may be out-of-service. 1. Look for TTR-LEV errors in the Error Log. If present, refer to TTR-LEV (TTR Level) Maintenance documentation. 2. Look for TONE-PT errors in the Error Log. If present, refer to TONE-PT (Tone Generator) Maintenance documentation. 3. If neither condition exists, retry the test at 1-minute intervals a maximum of 5 times. 4. If the test continues to abort, escalate the problem.
1004	ABORT	The port was seized by a valid call during the test. The test has been aborted. Use the **display port UUCSSpp** command to determine the station extension number of the port. Use the **status station** command to determine the service state of the port. If the service state indicates that the port is in use, then the port is unavailable for certain tests. (See Chapter 8, "Maintenance Commands", for a full description of all possible states.) You must wait until the port is idle before retesting. 1. Retry the command at 1-minute intervals a maximum of 5 times. 2. If the test continues to abort and the port is not in use, escalate the problem.

Continued on next page

Table 9-191. TEST #6 NPE Crosstalk Test — *Continued*

Error Code	Test Result	Description/ Recommendation
1018	ABORT	Test disabled via administration. This only applies to analog stations. 1. To enable test, set the Test field on the station administration screen for the particular analog station being tested to "y." Use the **change station <extension>** command.
2000	ABORT	Response to the test request was not received within the allowable time period. 1. Retry the command at 1-minute intervals a maximum of 5 times. 2. If the test continues to abort, escalate the problem.
2020	ABORT	The test did not run due to an already existing error on the specific port or a more general circuit pack error. 1. Examine Error Log for existing errors against this port or the circuit pack and attempt to diagnose the already existing error.
2100	ABORT	Could not allocate the necessary system resources to run this test. 1. Retry the command at 1-minute intervals a maximum of 5 times. 2. If the test continues to abort, escalate the problem.
Any	FAIL	The NPE of the tested port was found to be transmitting in error. This will cause noisy and unreliable connections. 1. Replace the circuit pack.
	PASS	The port is correctly using its allocated time slots. User-reported troubles on this port should be investigated using other port tests and by examining station, trunk, or external wiring.

Hybrid Electronic Power Feed Test (#56)

In this test, the software requests that the EPF be turned on for a given port. Then hardware attempts to turn on the power unit from the station. If no current is drawn, the station is probably not connected. If an overcurrent condition is sensed (that is, too much current is being drawn), this may indicate a short in the loop or a defective voice terminal. A message is returned stating that either the EPF was turned on successfully, or that an overcurrent condition exists. This test is repeated once more 5 seconds later. If either test is not successful, the test will abort (see first ABORT entry in Table 9-192 below).

Table 9-192. TEST #56 Hybrid Electronic Power Feed Test

Error Code	Test Result	Description/ Recommendation
	ABORT	Internal System Error 1. Retry the command at 1-minute intervals a maximum of 5 times. 2. If the test continues to abort, escalate the problem.
1000	ABORT	System resources required to run this test are not available. The port may be busy with a valid call. Use the **display port UUCSSpp** command to determine the station extension number of the port. Use the **status station** command to determine the service state of the port. If the service state indicates that the port is in use, then the port is unavailable for certain tests. (See Chapter 8, "Maintenance Commands", for a full description of all possible states.) You must wait until the port is idle before retesting. 1. If the port status is idle, then retry the command at 1-minute intervals a maximum of 5 times. 2. If the test continues to abort, escalate the problem.

Continued on next page

Table 9-192. TEST #56 Hybrid Electronic Power Feed Test — *Continued*

Error Code	Test Result	Description/ Recommendation
	FAIL	Internal System Error 1. Retry the command at 1-minute intervals a maximum of 5 times. 2. If the test continues to abort, escalate the problem.
	PASS	Electronic Power Feed test passed. The message to turn on the power to the station was successfully sent to the port. 1. Although this test will never actually return a FAIL result except for the **Internal System Error** described above, it will log an error if the overcurrent case is detected by the hardware. Check the Error Log for any entries with Error Type 257 when the test has completed. 2. If Error Type 257 does not appear in the Error Log within 10 seconds after completion of this test, it is safe to assume that the test sensed no problems with the power to the station. To verify that the station is powered up correctly, run a self-test on the station, if available, and check that all the feature buttons are operating. 3. If Error Type 257 appears in the Error Log, this indicates some problem with the power to the station. Check for a short in the wiring, a damaged jack, a defective voice terminal, or an incorrect type of terminal.

Hybrid Circuit and Conference Circuit Test (#57)

This test checks two different port circuit functions. The Hybrid Circuit test performs an analog reflective looparound measurement on the port's hybrid circuitry. The Conference Circuit test performs a conference test on the port's NPE.

For the *Hybrid Circuit Test* results to be valid, a voice terminal must be connected to the port being tested. The test instructs the on-board microprocessor to put the port in analog reflective looparound mode. The Tone-Clock circuit pack supplies a 1004-Hz tone to the port's listen time slot and a General Purpose Tone Detector (GPTD) measures the level of the reflected signal appearing on port's talk time slot.

The *Conference Test* is performed only if the Hybrid Test passes. The Conference Circuit Test verifies that the Network Processing Element (NPE) is able to correctly conference several test tones together. The test is executed in two parts. The first half of the test verifies operation of the NPE's first three conference channels, and the second half verifies the NPE's remaining four conference channels. The test puts the NPE in loop-around mode and instructs it to talk on a specified time slot while listening to a 1004-Hz tone using the Conference Channels. A GPTD then measures the signal and noise levels of the conferenced output and reports whether or not these fall within a specified acceptable range.

Table 9-193. TEST #57 Hybrid Circuit and Conference Circuit Test

Error Code	Test Result	Description/ Recommendation
	ABORT	Could not allocate the necessary system resources to run this test. 1. Retry the command at 1-minute intervals a maximum of 5 times. 2. If the test continues to abort, escalate the problem.
1000	ABORT	System resources required to run this test are not available. The port may be busy with a valid call. Use the **display port UUCSSpp** command to determine the station extension number of the port. Use the **status station** command to determine the service state of the port. If the service state indicates that the port is in use, then the port is unavailable for certain tests. (See Chapter 8, "Maintenance Commands", for a full description of all possible states.) You must wait until the port is idle before retesting. 1. If the port status is idle, then retry the command at 1-minute intervals a maximum of 5 times. 2. If the test continues to abort, escalate the problem.
1001	ABORT	Could not allocate the necessary system resources to run this test. 1. Retry the command at 1-minute intervals a maximum of 5 times. 2. If the test continues to abort, escalate the problem.
1002	ABORT	The system could not allocate time slots for the test. The system may be under heavy traffic conditions or it may have time slots out-of-service due to TDM-BUS errors. Refer to TDM-BUS (TDM Bus) Maintenance documentation to diagnose any active TDM-BUS errors. 1. If system has no TDM-BUS errors and is not handling heavy traffic, repeat test at 1-minute intervals a maximum of 5 times. 2. If the test continues to abort, escalate the problem.

Continued on next page

Table 9-193. TEST #57 Hybrid Circuit and Conference Circuit Test — *Continued*

Error Code	Test Result	Description/ Recommendation
1003	ABORT	The system could not allocate a tone receiver for the test. The system may be oversized for the number of Tone Detectors present or some Tone Detectors may be out-of-service. 1. Look for TTR-LEV errors in the Error Log. If present, refer to TTR-LEV (TTR Level) Maintenance documentation. 2. Look for TONE-PT errors in the Error Log. If present, refer to TONE-PT (Tone Generator) Maintenance documentation. 3. If neither condition exists, retry the test at 1-minute intervals a maximum of 5 times. 4. If the test continues to abort, escalate the problem.
1004	ABORT	The port was seized by a valid call during the test. The test has been aborted. Use the **display port UUCSSpp** command to determine the station extension number of the port. Use the **status station** command to determine the service state of the port. If the service state indicates that the port is in use, then the port is unavailable for certain tests. (See Chapter 8, "Maintenance Commands", for a full description of all possible states.) You must wait until the port is idle before retesting. 1. Retry the command at 1-minute intervals a maximum of 5 times. 2. If the test continues to abort and the port is not in use, escalate the problem.

Continued on next page

Table 9-193. TEST #57 Hybrid Circuit and Conference Circuit Test — *Continued*

Error Code	Test Result	Description/ Recommendation
1392	ABORT	This port is currently a TTI port and the test will not execute on it. 1. Verify that the port is a TTI port using either the **display port** command (the display shows that the port is a TTI port) or the **list config** command (the display shows a t for the port). 2. If either **list config** or **display port** indicate that the port is *not* a TTI port, escalate the problem. If both commands indicate that the port is a TTI port, the abort is correct, and no action is necessary.
2000	ABORT	Response to the test request was not received within the allowable time period. 1. Retry the command at 1-minute intervals a maximum of 5 times. 2. If the test continues to abort, escalate the problem.
2012	ABORT	Internal system error. 1. Retry the command at 1-minute intervals a maximum of 5 times. 2. If the test continues to abort, escalate the problem.
2100	ABORT	The system could not allocate a tone generator for the test. 1. Look for TONE-PT errors in the Error Log. If present, refer to TONE-PT (Tone Generator) Maintenance documentation. 2. If no TONE-PT errors appear in the Error Log, retry the test at 1-minute intervals a maximum of 5 times. 3. If the test continues to abort, escalate the problem.
2103	ABORT	The system could not make the conference connection for the test. 1. Retry the command at 1-minute intervals a maximum of 5 times. 2. If the test continues to abort, escalate the problem.

Continued on next page

Table 9-193. TEST #57 Hybrid Circuit and Conference Circuit Test — *Continued*

Error Code	Test Result	Description/ Recommendation
7	FAIL	Conference Test failed. User may be able to use conference circuit without difficulty in some cases. In other extreme cases, conference calling will be totally restricted.

Continued on next page

Table 9-193. TEST #57 Hybrid Circuit and Conference Circuit Test — *Continued*

Error Code	Test Result	Description/ Recommendation
57	FAIL	Hybrid Circuit Test failed. This could result in noisy or bad connections. 1. Run circuit pack tests to check the Tone Generator circuit pack and the Tone Detector circuit pack using the **test board UUCSS short** command. 2. Resolve any problems that are detected on the Tone Generator circuit pack or Tone Detector circuit pack. 3. If the Tone Generator and Tone Detector circuit packs are functioning properly, and the test still fails, replace the Hybrid Line circuit pack. **NOTE:** If the Hybrid Circuit and Conference Circuit Test fails for all ports on a circuit pack, a -5 volt power problem is indicated. If a TN736 or TN752 power unit circuit pack is present, the 631DB AC power unit may be defective. (The 631DB power unit is used in a medium cabinet powered by an AC source. The 645B power unit is used in a medium cabinet powered by a DC power source.) The system may contain either a TN736 or a TN752 power unit circuit pack OR a 631DB AC power unit, *but not both types of power units.* To investigate problems with a 631DB AC power unit, refer to CARR-POW (Carrier Port Power Unit for AC-Powered Systems) Maintenance documentation. To investigate problems with a 645B DC power unit, refer to CARR-POW (Carrier Port Power Unit for DC-Powered Systems) Maintenance documentation.
	PASS	Hybrid Circuit and Conference Circuit Test passed. The hybrid circuitry is transmitting properly. 1. If complaints still exist, investigate by using other port tests, and by examining the station, wiring, and connections.

Hybrid Line Local Digital Loop Around Test (#58)

This test checks the control channel between the Switch Processing Element (SPE) and the port's digital circuitry. The SPE sends transparent data to the on-board microprocessor and compares the data echoed back. This test is repeated three times.

Table 9-194. TEST #58 Hybrid Line Local Digital Loop Around Test

Error Code	Test Result	Description/ Recommendation
	ABORT	Internal system error. 1. Retry the command at 1-minute intervals a maximum of 5 times. 2. If the test continues to abort, escalate the problem.
1000	ABORT	System resources required to run this test are not available. The port may be busy with a valid call. Use the **display port UUCSSpp** command to determine the station extension number of the port. Use the **status station** command to determine the service state of the port. If the service state indicates that the port is in use, then the port is unavailable for certain tests. (See Chapter 8, "Maintenance Commands", for a full description of all possible states.) You must wait until the port is idle before retesting. 1. If the port status is idle, then retry the command at 1-minute intervals a maximum of 5 times. 2. If the test continues to abort, escalate the problem.

Continued on next page

Table 9-194. TEST #58 Hybrid Line Local Digital Loop Around Test — *Continued*

Error Code	Test Result	Description/ Recommendation
1004	ABORT	The port was seized by a valid call during the test. The test has been aborted. Use the **display port UUCSSpp** command to determine the station extension number of the port. Use the **status station** command to determine the service state of the port. If the service state indicates that the port is in use, then the port is unavailable for certain tests. (See Chapter 8, "Maintenance Commands", for a full description of all possible states.) You must wait until the port is idle before retesting. 1. Retry the command at 1-minute intervals a maximum of 5 times. 2. If the test continues to abort and the port is not in use, escalate the problem.
2000	ABORT	Response to the test request was not received within the allowable time period. 1. Retry the command at 1-minute intervals a maximum of 5 times. 2. If the test continues to abort, escalate the problem.
1,2,3	FAIL	The control channel between the processor and the port is not transmitting properly. This port is not operable. 1. Retry test. 2. If failure still occurs, replace circuit pack.
	PASS	Hybrid Line Local Digital Loop Around Test passed. The control channel is transmitting properly. 1. If complaints still exist, investigate by using other circuit pack tests, and by examining the station, wiring, and connections.

Hybrid Line Remote Digital Loop Around Test (#59)

This test checks the digital control pair from the port circuit to the terminal. The on-board microprocessor sends a message to the terminal and checks for a proper return message. This test is repeated three times, with two out of the three attempts passing being sufficient for this test to pass.

Table 9-195. TEST #59 Hybrid Line Remote Digital Loop Around Test

Error Code	Test Result	Description/ Recommendation
	ABORT	Internal System Error 1. Retry the command at 1-minute intervals a maximum of 5 times. 2. If the test continues to abort, escalate the problem.
1	ABORT	This port may have been busied out by system technician. 1. Make sure that the terminal is connected. 2. Retry the command at 1-minute intervals a maximum of 5 times. 3. If the test continues to abort, escalate the problem.
1000	ABORT	System resources required to run this test are not available. The port may be busy with a valid call. Use the **display port UUCSSpp** command to determine the station extension number of the port. Use the **status station** command to determine the service state of the port. If the service state indicates that the port is in use, then the port is unavailable for certain tests. (See Chapter 8, "Maintenance Commands", for a full description of all possible states.) You must wait until the port is idle before retesting. 1. If the port status is idle, then retry the command at 1-minute intervals a maximum of 5 times. 2. If the test continues to abort, escalate the problem.

Continued on next page

Table 9-195. TEST #59 Hybrid Line Remote Digital Loop Around Test — *Continued*

Error Code	Test Result	Description/ Recommendation
2000	ABORT	Response to the test request was not received within the allowable time period. 1. Retry the command at 1-minute intervals a maximum of 5 times. 2. If the test continues to abort, escalate the problem.
1,2,3	FAIL	Test failed on one of three tries. The circuit pack is not receiving a proper return message from the voice terminal. The user will not be able to place or receive calls on this port. 1. Replace terminal and rerun test. 2. If test still fails, replace the circuit pack.
	PASS	Hybrid Line Remote Digital Loop Around Test passed. The hybrid circuit pack is sending and receiving proper messages to and from the voice terminal. 1. If problems still exist, investigate using other circuit pack tests and by examining the station, wiring, and connections.

Hybrid Line Lamp Updates Test (#60)

For this test, the software lights the lamps on the terminal based on the status record contained in the processor. The lamp updates will run only if the station is in-service.

Table 9-196. TEST #60 Hybrid Line Lamp Updates Test

Error Code	Test Result	Description/ Recommendation
1	ABORT	This port may have been busied out by system technician. 1. Look in the Error Log for Error Type 18 (port busied out) for this port. If this error type is present, release the port via the **release station <extension>** command and run the test again. 2. Make sure that the terminal is connected. 3. Retry the command at 1-minute intervals a maximum of 5 times. 4. If the test continues to abort, escalate the problem.
2	ABORT	Internal System Error 1. Retry the command at 1-minute intervals a maximum of 5 times. 2. If the test continues to abort, escalate the problem.
3	ABORT	Station is in ready-for-service or out-of-service state. 1. Make sure terminal is connected. 2. Retry the command at 1-minute intervals a maximum of 5 times. 3. If the test continues to abort, escalate the problem.

Continued on next page

Table 9-196. TEST #60 Hybrid Line Lamp Updates Test — *Continued*

Error Code	Test Result	Description/ Recommendation
1000	ABORT	System resources required to run this test are not available. The port may be busy with a valid call. Use the **display port UUCSSpp** command to determine the station extension number of the port. Use the **status station** command to determine the service state of the port. If the service state indicates that the port is in use, then the port is unavailable for certain tests. (See Chapter 8, "Maintenance Commands", for a full description of all possible states.) You must wait until the port is idle before retesting. 1. If the port status is idle, then retry the command at 1-minute intervals a maximum of 5 times. 2. If the test continues to abort, escalate the problem.
1392	ABORT	This port is currently a TTI port and the test will not execute on it. 1. Verify that the port is a TTI port using either the **display port** command (the display shows that the port is a TTI port) or the **list config** command (the display shows a `t` for the port). 2. If either **list config** or **display port** indicate that the port is *not* a TTI port, escalate the problem. If both commands indicate that the port is a TTI port, the abort is correct, and no action is necessary.
	FAIL	Internal System Error 1. Retry the command at 1-minute intervals a maximum of 5 times. 2. If the test continues to abort, escalate the problem.
	PASS	Hybrid Line Lamp Updates completed successfully 1. If complaints still exist, investigate by using other circuit pack tests, and by examining the station, wiring, and connections.

Hybrid Line Audits Test (#61)

This is a series of three tests that are classified as audits. These audits will abort if attempted on an out-of-service station. The tests are as follows:

- Switchhook Audit—This is an update of the SPE records according to the circuit packs' records.
- Bad Scan Inquiry—A message is sent uplink that contains a count that is generated due to certain events relating to the data link conditions. This is an indication of data transmission problems between the Hybrid circuit pack and the voice terminal.
- EPF Inquiry—The status of the Electronic Power Feed is sent uplink. Possible conditions are: EPF-on-ok, EPF-off, EPF-no-load, and EPF-on-overcurrent.

Table 9-197. TEST #61 Hybrid Line Audits Test

Error Code	Test Result	Description/ Recommendation
	ABORT	Internal System Error
1	ABORT	Internal System Error
2	ABORT	Internal System Error 1. Retry the command at 1-minute intervals a maximum of 5 times. 2. If the test continues to abort, escalate the problem.
3	ABORT	This port may have been busied out by system technician. 1. Look in the Error Log for Error Type 18 (port busied out) for this port. If this error type is present, release the port via the **release station <extension>** command and run the test again. 2. Make sure that the terminal is connected. 3. Retry the command at 1-minute intervals a maximum of 5 times. 4. If the test continues to abort, escalate the problem.

Continued on next page

Table 9-197. TEST #61 Hybrid Line Audits Test — *Continued*

Error Code	Test Result	Description/ Recommendation
1000	ABORT	System resources required to run this test are not available. The port may be busy with a valid call. Use the **display port UUCSSpp** to determine the station extension number of the port. Use the **status station** command to determine the service state of the port. If the service state indicates that the port is in use, then the port is unavailable for certain tests. (See Chapter 8, "Maintenance Commands", for a full description of all possible states.) You must wait until the port is idle before retesting. 1. If the port status is idle, then retry the command at 1-minute intervals a maximum of 5 times. 2. If the test continues to abort, escalate the problem.
1004	ABORT	The port was seized by a valid call during the test. The test has been aborted. Use the **display port UUCSSpp** command to determine the station extension number of the port. Use the **status station** command to determine the service state of the port. If the service state indicates that the port is in use, then the port is unavailable for certain tests. (See Chapter 8, "Maintenance Commands", for a full description of all possible states.) You must wait until the port is idle before retesting. 1. Retry the command at 1-minute intervals a maximum of 5 times. 2. If the test continues to abort and the port is not in use, escalate the problem.
1392	ABORT	This port is currently a TTI port and the test will not execute on it. 1. Verify that the port is a TTI port using either the **display port** command (the display shows that the port is a TTI port) or the **list config** command (the display shows a `t` for the port). 2. If either **list config** or **display port** indicate that the port is *not* a TTI port, escalate the problem. If both commands indicate that the port is a TTI port, the abort is correct, and no action is necessary.

Continued on next page

Table 9-197. TEST #61 Hybrid Line Audits Test — *Continued*

Error Code	Test Result	Description/ Recommendation
2000	ABORT	Response to the test request was not received within the allowable time period.
	FAIL	Internal System Error 1. Retry the command at 1-minute intervals a maximum of 5 times. 2. If the test continues to abort, escalate the problem.
	PASS	Hybrid Line Audits Test passed. 1. Although this test will never actually return a FAIL result except for the **Internal System Error** described above, it is possible that it will enter Error Types 257 or 513 into the Error Log. To determine if there are any problems that don't show up in the test result, look for these error types in the Error Log. 2. If these errors appear in the Error Log, or if user complaints still exist, investigate by using other circuit pack tests, and by examining the station, wiring, and connections.

Hybrid Line Ringer Update Test (#62)

In this update, a ‘‘ringer on’’ or a ‘‘ringer off’’ message is sent to the firmware to start and stop the ringer on the set.

Table 9-198. TEST #62 Hybrid Line Ringer Update Test

Error Code	Test Result	Description/ Recommendation
3	ABORT	This port may have been busied out by system technician. 1. Look in the Error Log for Error Type 18 (port busied out) for this port. If this Error Type is present, release the port via the **release station <extension>** command and run the test again. 2. Make sure that the terminal is connected. 3. Retry the command at 1-minute intervals a maximum of 5 times. 4. If the test continues to abort, escalate the problem.
1000	ABORT	System resources required to run this test are not available. The port may be busy with a valid call. Use the **display port UUCSSpp** command to determine the station extension number of the port. Use the **status station** command to determine the service state of the port. If the service state indicates that the port is in use, then the port is unavailable for certain tests. (See Chapter 8, "Maintenance Commands", for a full description of all possible states.) You must wait until the port is idle before retesting. 1. If the port status is idle, then retry the command at 1-minute intervals a maximum of 5 times. 2. If the test continues to abort, escalate the problem.

Continued on next page

Table 9-198. TEST #62 Hybrid Line Ringer Update Test — *Continued*

Error Code	Test Result	Description/ Recommendation
1392	ABORT	This port is currently a TTI port and the test will not execute on it. 1. Verify that the port is a TTI port using either the **display port** command (the display shows that the port is a TTI port) or the **list config** command (the display shows a `t` for the port). 2. If either **list config** or **display port** indicate that the port is *not* a TTI port, escalate the problem. If both commands indicate that the port is a TTI port, the abort is correct, and no action is necessary.
	FAIL	Internal System Error 1. Retry the command at 1-minute intervals a maximum of 5 times. 2. If the test continues to abort, escalate the problem.
	PASS	Hybrid Station Ringer Update passed 1. If complaints still exist, investigate using other circuit pack tests on this circuit pack, and by examining the terminal, wiring, and connections.

Maintenance Object Repair Procedures
INADS to ISDN-TRK

I

INADS (INADS Link)

MO Name As It Appears in Alarm Log	Alarm Level	Initial System Technician Command to Run	Full Name of MO
INADS	none	test inads-link	INADS Link

The INADS Link maintenance object (MO) represents the software and communications link required by the switch to make a call to the Initialization and Administration System (INADS). The purpose of the INADS Link MO is to check the communications link between the system and INADS and verify that the alarm notification process works correctly. An INADS technician can test the process remotely to verify that alarms will be reported to INADS, or a system technician may want to test the connection while on-site at installation time or during subsequent service calls.

Although the INADS Link MO is never alarmed, the errors are logged. The errors are only logged as a result of the **test inads-link** command being issued.

Hardware Error Log Entries and Test to Clear Values

The Hardware Error Log entries are described as part of the INADS Link Test description below.

System Technician-Demanded Tests: Descriptions and Error Codes

The **test inads-link** command is different from other test commands. This command does not have a long or short option, and the test on the INADS Link does not have an associated test number. When the **test inads-link** command is issued, the user immediately sees either the ‘‘Command successfully completed’’ or ‘‘Command failed’’ message. Refer to Chapter 8, "Maintenance Commands" for more details.

INADS Link Test (No Test Number)

The INADS Link Test attempts to place a call to INADS (in the background) to verify the communications link to INADS. When the **test inads-link** command is entered, the user immediately sees either ‘‘Command successfully completed’’ or ‘‘Command failed.’’ The ‘‘Command failed’’ message appears when a previously run **test inads-link** command is in progress or the system has active alarms which must be reported to INADS. The ‘‘Command successfully completed’’ means the switch will start the attempt to call INADS in 2 minutes (the test will still run even if Alarm Origination is disabled). The 2-minute delay allows a remote INADS technician time enough to hang up the call and thus free up the INADS line so that the switch can call INADS back. As error conditions are encountered, errors are logged against INADS. Error codes 1 through 9 can be logged if the test result was ‘‘Command successfully completed’’ and Error Codes 10 and 11 can be logged if the test result was ‘‘Command failed.’’ An error is also logged against INADS if the call to INADS finally succeeds. The INADS software (release 3.2 or later) recognizes this special ‘‘test inads’’ type of alarm and will automatically open and then close a trouble ticket which indicates that the reason for the trouble ticket is a **test inads-link** command. The trouble ticket alarm will contain a “TESTING INADS LINK’’ description field.

After entering the command, it may take as long a 9 minutes for the switch to place the call and for INADS to respond. The Error Log should be examined using the category **inads** 10 minutes after successfully entering the command to determine if the call was successful. Table 9-199 explains the error codes.

Table 9-199. INADS Link Test Error Log Entries

Error Code	Test Result	Description/ Recommendation
1	0	The call was successfully placed to INADS. No trouble found.
2	0	Informative error indicating that alarm origination was disabled at the time of the test. The test will still run even if alarm origination is disabled. 1. If Alarm Origination is desired, then enable this feature via the Maintenance-Related System Parameters Form. 2. Repeat the test.
3	0	The INADS connection is currently in use. 1. Wait 10 minutes and retry this command.
4	0	INADS did not answer the alarm origination call. 1. Verify INADS is up and running. 2. Verify that the INADS phone number and switch product id are correct via the Maintenance-Related System Parameters Form. 3. Enable alarm origination via the Maintenance-Related System Parameters Form and test the SYSAM (System Access Maintenance) by issuing the **test maintenance a|b** command. If SYSAM Tests #916 and #917 do not pass, then refer to SYSAM (System Access Maintenance) Maintenance documentation. 4. Retry the command.
5	0	No INADS phone number administered. 1. Administer the INADS phone number via the Maintenance-Related System Parameters Form. 2. Retry the command.

Continued on next page

Table 9-199. INADS Link Test Error Log Entries — *Continued*

Error Code	Test Result	Description/ Recommendation
6	0	INADS did not send the acknowledgment message to the ‘‘test inads alarm’’ message. 1. Verify that the INADS phone number and switch product id are correct via the Maintenance-Related System Parameters Form. 2. Verify INADS is up and running. 3. Retry the command.
7	0	INADS sent a negative acknowledgment to the ‘‘TESTING INADS LINK’’ message. 1. Verify that the product id on the switch and in the INADS database are the same. Use the Maintenance-Related System Parameters Form to determine the product id the switch has. 2. Rerun the test.
8	0	INADS sent an unknown acknowledgment to the ‘‘TESTING INADS LINK’’ message.
9	0	Internal System Error 1. Try the command again at 1 minute intervals up to 5 times. 2. If the test continues to abort, escalate the problem.
10	0	There is already a **test inads-link** command in progress. 1. Wait 10 minutes for the present command to finish. 2. Review the results of the present command by viewing the Error Log and selecting the category ‘‘inads-link.’’
11	0	The switch is trying to report alarms to INADS. The test cannot be run at this time. 1. Wait 10 minutes and retry the command.

ISDN-LNK (ISDN-PRI Signaling Link Port)

MO Name As It Appears in Alarm Log	Alarm Level	Initial System Technician Command to Run (a)	Full Name of MO
ISDN-LNK (b)	MINOR	test port *UUCSSpp* l	ISDN-PRI Signaling Link Port
ISDN-LNK	WARNING	test port *UUCSSpp* sh	ISDN-PRI Signaling Link Port

a. pp is *24* for 24-channel interfaces and *16* for 32-channel interfaces>

b. For additional related information, see UDS1-BD.

NOTE:
See the figures in the ISDN-SGR section of this chapter for an illustration of the principles described below.

The ISDN-PRI interface uses out-of-band signaling (as opposed to robbed-bit, in-band signaling) to transmit control messages between two endpoints. User information channels carry digitized voice and digital data and are known as bearer channels (B-channels). B-channels are assigned to DS1 ISDN trunks or PRI endpoints. Call control signaling for the B-channels is combined and carried over the separate ISDN-PRI Signaling Link Port D-channel.

The ISDN-PRI Signaling Link Port (ISDN-LNK) is a port on a TN464C/D UDS1 Interface circuit pack, which has a direct interface to the packet bus which carries D-channel messages to the processor. The associated B-channels can use ports on the same circuit pack or ports on other TN464C/Ds or TN767 DS1 Interface circuit packs. (The TN722 cannot be used for this application). The B-channels are connected to the TDM Bus.

Two types of DS1 interfaces exist:

- 24 DS0 channels on a 1.544 Mbps link
- 31 DS0 channels + 1 framing channel on a 2.048 Mbps link

  The 32-channel mode is supported only on TN464 series circuit packs and on G3r V2 systems.

On 24-channel interfaces, the B-channels may use any of the first 23 ports. The signaling link is assigned to the 24th port. On 32-channel interfaces, the DS1 ISDN Trunks (B-channels) may use any of ports 1 to 15 and 17 through 31. The signaling link is assigned to the 16th port. The 32nd channel (port 0) is used for framing. In NFAS configurations, the 24th or 16th ports on some of the DS1 circuit packs may be used for B-channels. Refer to ISDN-SGR for further information.

A problem with the ISDN-LNK will have an effect on all of the associated B-channels since without it no call control information can be conveyed to the far-end switch or terminal adapter. Stable calls may remain operational, but no new calls can be made. The ISDN-LNK in turn depends on the TN464C/D UDS1 Interface circuit pack it resides on and the packet bus which provides the link to the processor. If there are problems with the ISDN-LNK, also investigate the TN464C/D UDS1 Interface circuit pack (UDS1-BD) and the packet bus (PKT-BUS).

Hardware Error Log Entries and Test to Clear Values

ISDN-PRI Signaling Link Port Error Log Entries

Error Type	Aux Data	Associated Test	Alarm Level	On/Off Board	Test to Clear Value
0*	0	Any	Any	Any	test port *UUCSSpp***
18 (a)	0	busyout port *UUCSSpp***	WARNING	OFF	release port *UUCSSpp***
130 (b)		None	WARNING	ON	test port *UUCSSpp***
1537 (c)	46210		WARNING	OFF	
1793 (d)					test board UUCSS l
3585 (e)	46222		MINOR	ON	
3841 (f)	46211				
3842 (g)	46223				
3843 (h)		Signaling Port LAN Loopback test (#939)			test port *UUCSSpp*** l

* Run the Short Test Sequence first. If all tests pass, run the Long Test Sequence. Refer to the appropriate test description and follow the recommended procedures.

** pp is 24 for 24-channel interfaces and 16 for 32-channel interfaces.

Notes:

a. The D-channel is demand busied out. No calls can be made over this D-channel.

b. This error type indicates that the circuit pack has been removed or has been insane for more than 11 minutes. To clear the error, reinsert or replace the circuit pack.

c. Link error. This error occurs when the port receives an invalid frame over the D-channel. This error normally indicates an off-board problem usually related to transmission errors on the DS1 facility. Execute **list measurements ds1-log** for the UDS1 TN464 circuit pack on which the D-channel resides. If the UDS1 is reporting some errors, then the DS1 facility has experienced transmission problems which could have caused the ISDN-LNK to report a Link Error.

If the UDS1 is not reporting errors, execute the long test sequence for the D-channel. Investigate any errors. If there are none, execute a long test sequence for the UDS1 circuit pack (UDS1-BD). Investigate any errors.

If no errors could be found by testing, the Link Error is probably not affecting service. However, if this Link Error continues to be logged, follow normal escalation procedures.

d. UDS1 Interface circuit pack is out-of-service. Look for and resolve UDS1-BD errors in the Hardware Error Log.

e. Transmit FIFO Overflow error. This error indicates that the circuit pack is having problems transmitting data to the Packet Bus, thus affecting the conveyance of signaling information over the D-channel. Specifically, this error occurs when the Packet Bus transmit buffers overflow. This condition probably indicates a hardware problem.

   The actual alarming level will depend on the options chosen via the **set options** command on the G3-MT terminal. ISDN-PRI Signaling Link Port alarms are treated as Station alarms, and their default alarming option is to downgrade all alarms to Warning. The value shown in the preceding table indicates the normal, unfiltered case (option ‘‘y’’ on the set options form).

f. Bad DLCI error. This error occurs when a LAPD frame is received across the DS1 facility which contains a DLCI which does not have a valid entry in the on-board translation memory. This error normally indicates an off-board problem usually related to a broken endpoint or a state mismatch between a remote endpoint and the local call processing software. Maintenance will not start any testing or generate any alarms in response to this error.

g. Receive FIFO Overflow error. This error occurs when the circuit pack detects an overflow of its receive buffers. If it occurs frequently, it may indicate a LAPD parameter mismatch between the two end-points of a packet switched connection. LAPD should be able to recover from this problem, but it may degrade the performance of the LAN Bus. Maintenance will not start any testing or generate any alarms in response to this error.

h. This error occurs when the *Signaling Port LAN Loopback Test (#939)* fails. Run the long test sequence and pay particular attention to the results of Test #939.

System Technician-Demanded Tests: Descriptions and Error Codes

The command to test the ISDN-LNK MO is **test port** UUCSSpp where pp is 24 for 24-channel interfaces and 16 for 32-channel interfaces.

Order of Investigation	Short Test Sequence	Long Test Sequence	D/ND*
Signaling Port LAN Loopback Test (#939)		X	D
Signaling Link Board Check (#643)	X	X	ND

* D = Destructive; ND = Nondestructive

Signaling Link Board Check (#643)

This test checks the health of the TN464C/D UDS1 Interface transporting the ISDN-PRI Signaling Link Port

Table 9-200. TEST #643 Signaling Link Board Check

Error Code	Test Result	Description/ Recommendation
	ABORT	Internal System Error 1. Retry the command at 1-minute intervals for a maximum of 5 times. 2. If the test continues to abort, escalate the problem.
1700	ABORT	Rollabout video abort. The PRI terminal adapter associated with this D-channel port is detached from the circuit pack. This is normal when the rollabout video feature is enabled. To complete a test on this port, do one of the following: 1. Re-attach the disconnected PRI terminal adapter 2. Disable the rollabout video feature on this board by entering **change ds1 UUCSS** and set the field labeled ‘‘Alarm when PRI Endpoint Detached?” to “y.”
8	FAIL	The UDS1 TN464C/D circuit pack is not in-service. 1. Check the Hardware Error Log for entries logged against UDS1-BD and consult the UDS1-BD (UDS1 Interface Circuit Pack) Maintenance documentation for repair procedures.
	PASS	The UDS1 Interface circuit pack transporting the ISDN-PRI Signaling Link Port is in-service.

Signaling Port LAN Loopback Test (#939)

This test is destructive.

This test verifies the connectivity of an ISDN-PRI signaling port (D-channel) across the LAN bus, also known as the packet bus. It will execute only if the port is out-of-service. Failure of this test indicates a fault associated with the port hardware on the circuit pack.

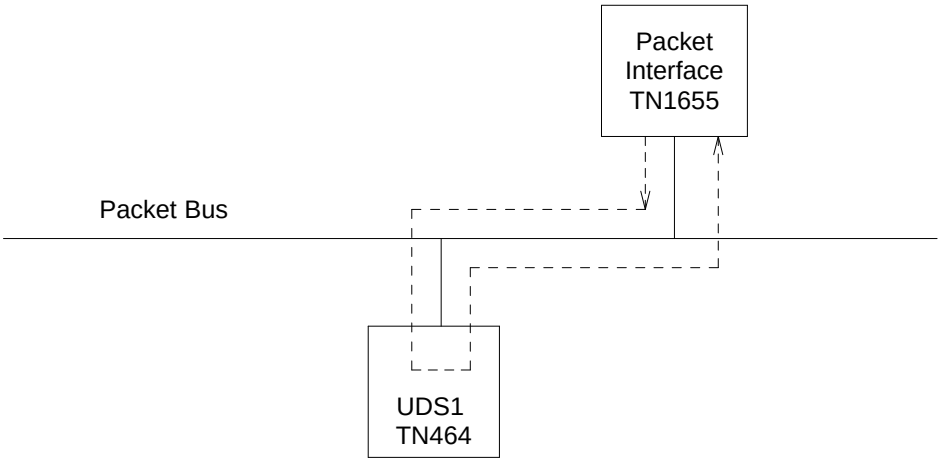

Figure 9-53. Signaling Port LAN (Packet Bus) Loopback

Table 9-201. TEST #939 Signaling Port LAN Loopback

Error Code	Test Result	Description/ Recommendation
1015	ABORT	The port is not in the out-of-service state. Use the **busyout port** UUCSSpp command to place it in the out-of-service state and repeat this test. **CAUTION:** *The **busyout** will prevent new call originations on all B-channels in the signaling group until the port is released.*
1139	ABORT	The Packet Bus in this port network is out-of-service. 1. Follow repair procedures for the Packet Bus. 2. Enter **test port** UUCSSpp **long** command and check results of this test (#939).
1141	ABORT	The Packet Interface circuit pack is out-of-service. 1. Follow repair procedures for PKT-INT. 2. Enter **test port** UUCSSpp **long** command and check results of this test (#939).
1144	ABORT	The Packet Bus in the PPN is out-of-service. 1. Follow repair procedures for the Packet Bus. 2. Enter **test port** UUCSSpp **long** command and check results of this test (#939).
2012	ABORT	Internal system error.
2100	ABORT	Could not allocate the necessary system resources to run this test. 1. Retry the command at 1-minute intervals a maximum of 5 times. 2. If the test continues to abort, escalate the problem.

Continued on next page

Table 9-201. TEST #939 Signaling Port LAN Loopback — *Continued*

Error Code	Test Result	Description/ Recommendation
	FAIL	The Loopback Test has failed. 1. If the test fails repeatedly, attempt to reset the circuit pack when the other ports on the board are not in use. Reset the circuit pack by entering **busyout board UUCSS** and **reset board UUCSS**. 2. Repeat the test and, if it continues to fail, replace the circuit pack.
	PASS	Connectivity of the D-channel over the Packet Bus is operational.

ISDN-SGR (ISDN-PRI Signaling Group)

MO Name As It Appears in Alarm Log	Alarm Level	Initial System Technician Command to Run (a)	Full Name of MO
ISDN-SGR	MINOR	test sig-group *grp#*	ISDN-PRI Signaling Group
ISDN-SGR	WARNING	test sig-group *grp#*	ISDN-PRI Signaling Group

a. *grp#* is the signaling group number (1-166); the test sequence can be either short or long.

An ISDN-PRI Signaling Group is a collection of B-channels for which a given ISDN-PRI Signaling Channel Port (D-channel) carries signaling information. B-channels carry voice or data and can be assigned to DS1 ISDN trunks (ISDN-TRK) or PRI endpoint ports (PE-BCHL).

NOTE:
Throughout this discussion the term B-channels refers to ISDN-TRKs or PE-BCHLs, depending on the application under investigation.

The following circuit packs are supported in the implementation of ISDN-PRI.

Circuit Pack	Channel Types	Interface
TN464C/D	B and D channels	24 or 32 channel
TN767	B channels	24 channel
TN464B	B channels	32 channel (G3r V2 only)

The TN464C/D UDS1 Interface circuit pack, which has a direct interface to the packet bus, is required for D-channel signaling. There are two types of DS1 interfaces:

- 24 DS0 channels on a 1.544 Mbps link
- 31 DS0 channels + 1 framing channel on a 2.048 Mbps link

  32-channel mode is supported only on G3r V2 systems with TN464 series circuit packs.

The following discussion describes 24-channel interface signaling groups. The 32-channel interface works the same way, except that only port number 16 is used for signaling instead of port number 24. Ports 1 through 15 and 17 through 31 are used for B-channels. The 32nd channel (port 0) is always used for

framing. Figure 9-54 through Figure 9-59 illustrate each type of signaling and interface combination.

ISDN-PRI D-channel signaling can be combined with a group of B-channels in three basic <ways:

- Facility-associated signaling (FAS)
- Nonfacility-associated (NFAS) simplex signaling
- NFAS duplex signaling

In a FAS signaling group, the 24th port of the TN464C/D UDS1 Interface circuit pack carries D-channel signaling for up to 23 B-channel ports on the same circuit pack.

In an NFAS signaling group, the 24th port of one TN464C/D UDS1 Interface can carry D-channel signaling for B-channels on several other DS1 circuit pack as well, including TN767s and TN464Bs. The 24th port on the other circuit packs can be used for B-channels. A D-channel in an NFAS group can signal for B-channels on a total of 20 DS1 circuit packs.

NFAS duplex signaling provides increased reliability, which is highly desirable since NFAS permits the D-channel to signal for many more B-channels. NFAS Duplex allows the administration of a backup D-channel which remains in a standby state until the active D-channel goes down. If the active D-Channel does go down, the backup D-Channel takes over and provides signaling for all the B-channels in the signaling group.

The operation of the entire ISDN-PRI signaling group depends on several other entities: the ISDN-PRI signaling channel ports, the TN464C/D UDS1 Interface circuit pack on which the D-channels reside and the system link that is carried over the packet bus to the processor. When there are problems with the ISDN-PRI signaling group, also investigate ISDN-LNK, UDS1-BD, SYS-LINK. and PKT-BUS.

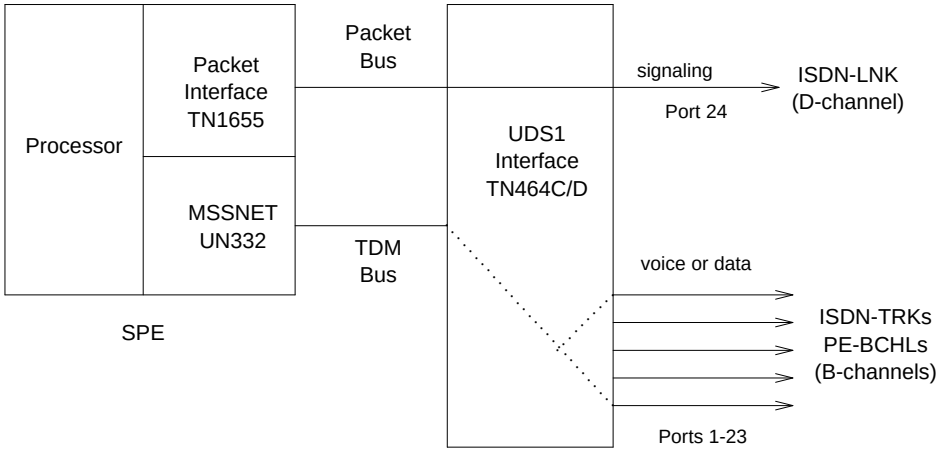

Figure 9-54. 24-Channel FAS ISDN-PRI Signaling Group

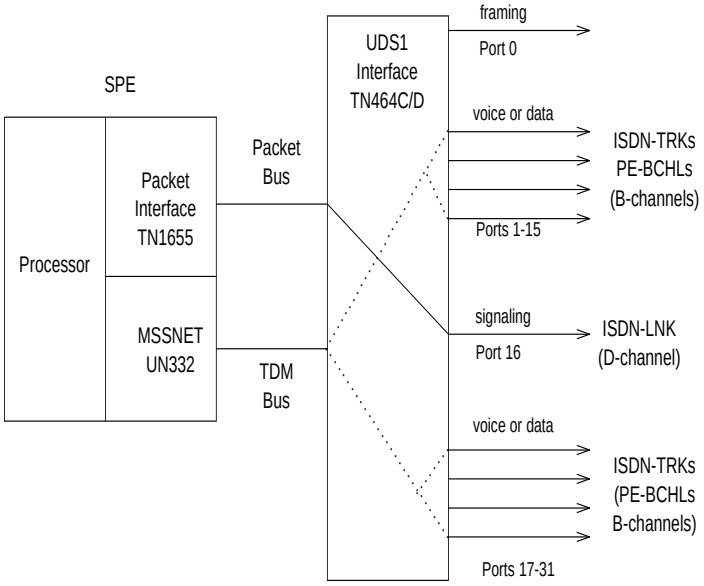

Figure 9-55. 32-Channel FAS ISDN-PRI Signaling Group

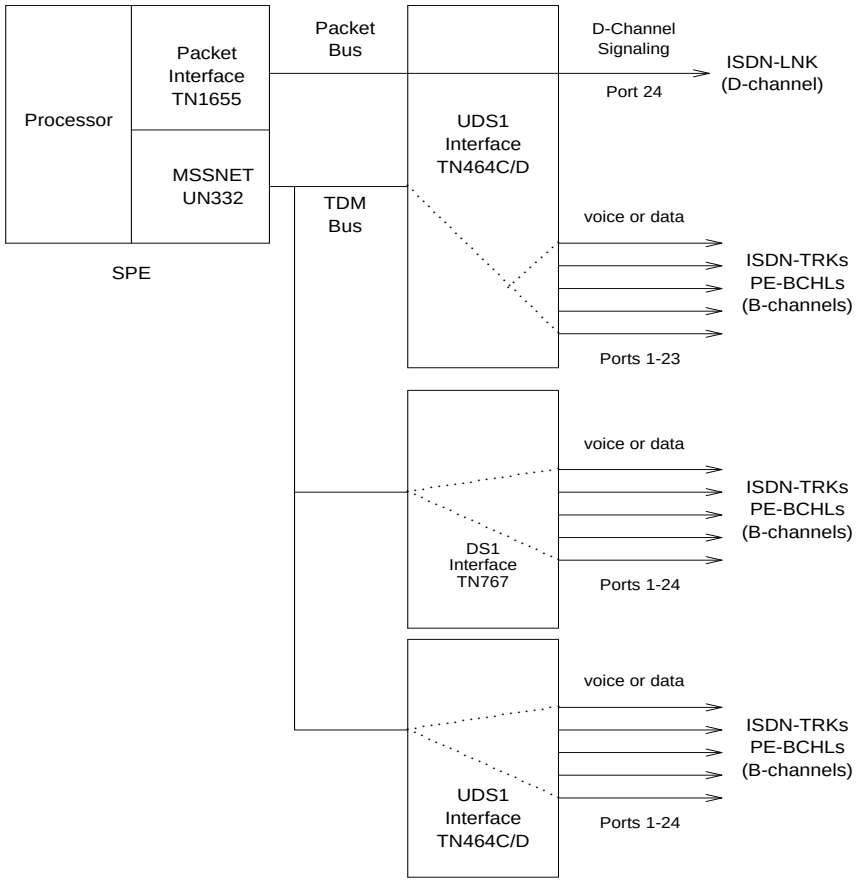

Figure 9-56. 24-Channel NFAS Simplex ISDN-PRI Signaling Group

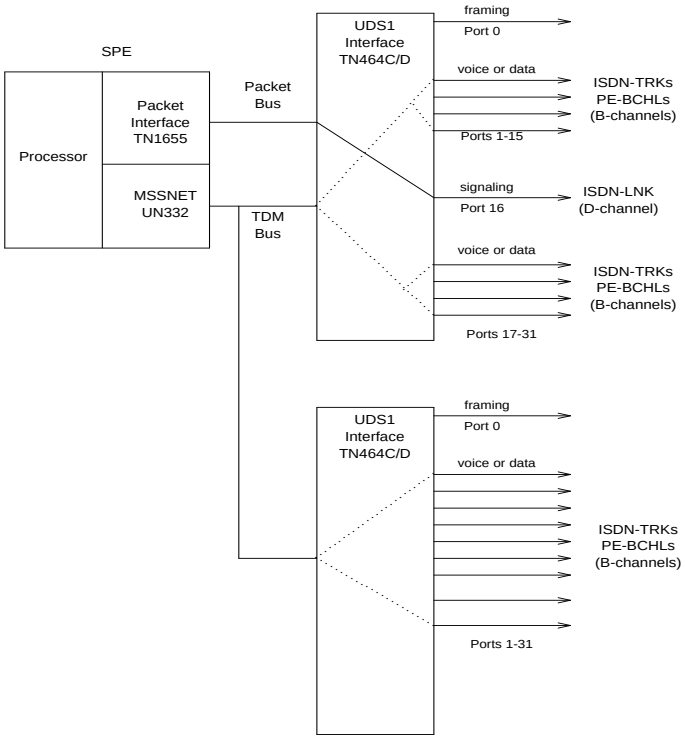

Figure 9-57. 32-Channel NFAS Simplex ISDN-PRI Signaling Group

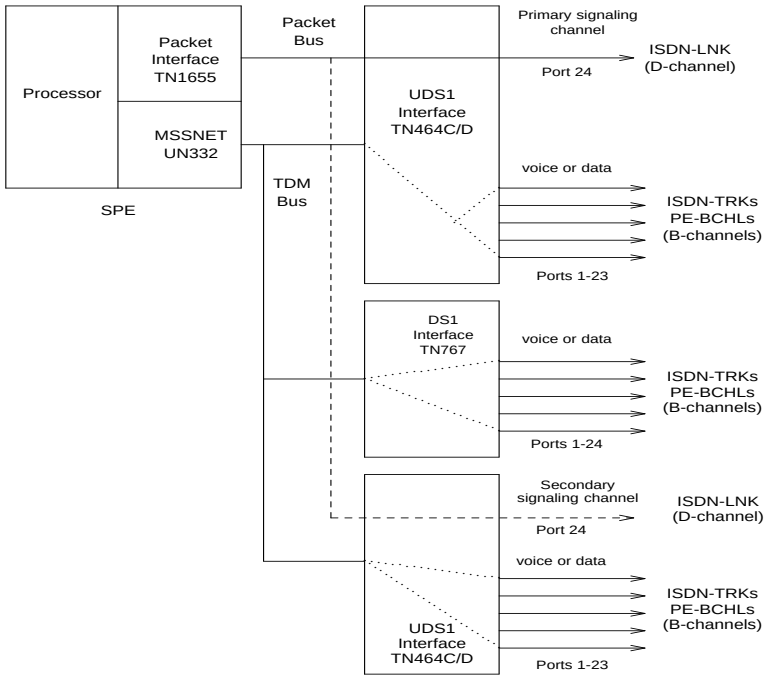

Figure 9-58. 24-Channel NFAS Duplex ISDN-PRI Signaling Group

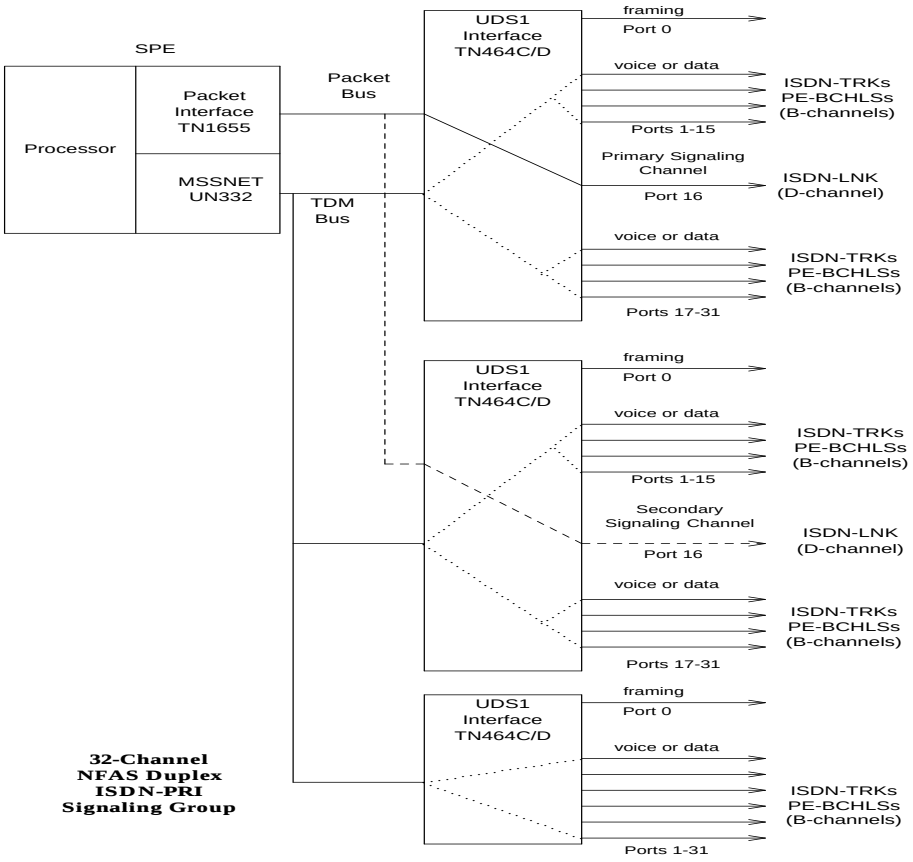

Figure 9-59. 32-Channel NFAS Duplex ISDN-PRI Signaling Group

Hardware Error Log Entries and Test to Clear Values

ISDN-PRI Signaling Group Error Log Entries					
Error Type	**Aux Data**	**Associated Test**	**Alarm Level**	**On/Off Board**	**Test to Clear Value**
0*	0	Any	Any		test sig-group *grp#*
1 (a)	Any	None			
257 (b)	Any	None			test sig-group *grp#*
513 (c)	Any	None			test sig-group *grp#*
769	Any	Primary Signaling Link Hardware Check (#636)			test sig-group *grp#*
1025	Any	Secondary Signaling Link Hardware Check (#639)			test sig-group *grp#*
1793 (d)	Any	None			test sig-group *grp#*
2049 (d)	Any	None			test sig-group *grp#*
2305 (d)	Any	Remote Layer 3 Query (Test #637)	MINOR	OFF	test sig-group *grp#*
3585 (e)	Port number	None			
3840 to (f)3928	Port number	None			

* Run the Short Test Sequence first. If all tests pass, run the Long Test Sequence. Refer to the appropriate test description and follow the recommended procedures.

Notes:

a. This switch sent a message to the far-end switch or terminal adapter, and the far-end did not respond in the allotted time. Possible causes include link failure and congestion or outage at the far-end. The Aux Data field contains Layer 3 protocol information used by internal counters.

   If no other symptoms are not present, no action is required. If Layer 3 communication is down, there should be indications in the form of alarms and errors for link components. Check out other errors against ISDN-SGR, ISDN-TRK, and other hardware components on the link.

   There is no test to clear these errors. The error counter is decremented by 1 every 15 minutes.

b. This error indicates that the primary signaling channel connection has been lost for more than 90 seconds. If a secondary signaling channel does not exist or is not in-service, the associated B-channels will be placed in the ISDN Maintenance/Far-End state. The B-channels will not be usable for outgoing calls, although incoming calls will still be accepted. The switch will automatically attempt to recover the signaling link. Pay particular attention to the results of Test #636 (Primary Signaling Link Hardware Check) in the test sequence. When the link does recover, the B-channels will be negotiated back to the In-Service state and their alarms will be retired.

   When this error occurs, the state of the Signaling Group is changed to out-of-service (verify using the **status sig-group** command).

c. This error indicates that the secondary signaling channel connection has been lost for more than 90 seconds. If the primary signaling channel is not in-service, B-channels will be placed in the ISDN Maintenance/Far-End state. The B-channels will not be usable for outgoing calls, although incoming calls will still be accepted. The switch will automatically attempt to recover the signaling link. Pay particular attention to the results of Test #639 (Secondary Signaling Link Hardware Check) in the test sequence. When the link does recover, the B-channels will be negotiated back to the In-Service state and their alarms will be retired.

   When this error occurs, the state of the Signaling Group is changed to out-of-service (verify using the **status sig-group** command).

d. This error indicates a failure of Test #637, the Remote Layer 3 Query. A specific message was sent to the far-end switch, and it did not respond within the allotted time. Investigate elements of the ISDN PRI D-channel(s) (ISDN-LNK) for both this switch and the Far-end switch. If Test #637 fails twice in a row, the B-channels will be alarmed and made unavailable for outgoing calls (although incoming calls will still be accepted). When Test #637 succeeds and the Far-end switch starts responding properly, the DS1 ISDN Trunk (B-channels) will be placed back into normal operation and their alarms will be retired.

e. A SERV or SERV ACK ISDN D-channel message has been received by a non-US-type interface (country option other than 1 on the DS1 administration form). However, these messages are used only for duplex NFAS signaling which is supported only by country protocol 1.

   Thus, there may be a mismatch in administration between the local and far-end switches. Consult with the customer's network provider to determine whether the D-channel is set up correctly on the far-end switch.

f. These error types are used to report certain error messages received by the ISDN-PRI Signaling Group for one of its associated B-channels. The aux data field shows for which B-channel (port number) the message was received.

   The error code generated equals 3840+*x*, where *x* is a Cause Value defined by the ISDN PRI Specification. Note that there is no Test to Clear Value for these error types; selected ISDN cause values are placed in the

log when they are received, but no direct action or alarming is performed solely in response to receiving them. They provide added data that may prove useful when tracking down obscure networking and routing problems. Table 9-202 provides more information:

Table 9-202. Descriptions and Recommendations for Error Types 3840-3928

Error Code	Description	Recommendation
3842	A request has been made to use a transit network or common carrier that cannot be accessed.	1. From the circuit pack and port number (in the Aux Data field), determine the trunk group against which the error was reported. 2. Check all routing patterns containing this trunk group for validity of interexchange carriers requested (IXC field).
3846	The far-end switch has indicated that the B-channel (trunk) is not acceptable for use in the call for which it was requested.	This could indicate an administration problem (for example, the local switch and the far-end switch have different B-channels administered), or could reflect the occurrence of a normal race condition (for example, the local switch has requested use of a B-channel which the far-end switch had just reserved for use on another call). 1. From the circuit pack and port number (in the Aux Data field), determine the trunk group against which the error was reported. 2. Issue the **status trunk** command for the indicated trunk. 3). Refer to the "DS1 ISDN Trunk Service States" on page I-35 for recovery suggestions.
3858	Similar to Error Type 1. The switch sent an ISDN message to the far-end switch or terminal adapter which did not respond in the allotted time.	Follow same recommendations as for Error Type 1.

Continued on next page

Table 9-202. Descriptions and Recommendations for Error Types 3840-3928 — *Continued*

Error Code	Description	Recommendation
3878	The far-end switch has indicated that the network is not functioning correctly and that the condition may last a relatively long period of time (for example, immediately re-attempting the call may not be successful).	1. From the circuit pack and port number (in the Aux Data field, determine the trunk group against which the error was reported. 2. Consult with the network provider to determine the nature and expected duration of the out of service condition. 3. Consider modifying all routing patterns containing this trunk group, to route calls around the network which is out of service.
3890	A request to use a network service (e.g., SDN) has been denied. Administration somewhere on the network has indicated that the requested service has not been subscribed to or purchased for this trunk.	This could be a local administration problem only, or a mismatch between the local administration and that of the network provider. 1. From the circuit pack and port number (in the Aux Data field), determine the trunk group against which the error was reported. 2. Display the trunk group form: If the trunk group is Call-by-Call (Service Type is ‘‘cbc’’), check all routing pattern forms containing this trunk group to see if the Service/Feature fields contain the correct network services purchased for this trunk. If the trunk group is not Call-by-Call, check that the Service Type field contains the single network service purchased for this trunk. 3. If local administration appears correct, consult with the customer and/or the network provider to determine the services that the customer has subscribed to for this trunk group.

Continued on next page

Table 9-202. Descriptions and Recommendations for Error Types 3840-3928 — *Continued*

Error Code	Description	Recommendation
3892	Protocol detail; may offer a clue if customer is having ISDN calls denied with an unexpected intercept tone.	If customer is complaining of unexpected intercept tones when accessing ISDN trunks or PRI endpoints and no other cause can be found, escalate the problem and provide the next tier with this Error Log information.
3894	Protocol detail; may offer a clue if customer is having ISDN calls denied with an unexpected intercept tone.	First, eliminate any transitory state mismatch problems by issuing the **test port UUCSSpp** command for the trunk port shown in the aux data field. Test #256 (Service State Audit) is the important test in the sequence. If this passes satisfactorily, yet the customer continues to complain of unexpected intercept tones when accessing ISDN trunks or PRI endpoints and no other cause can be found, escalate the problem and provide the next tier with this Error Log information.
3905	Protocol detail; may offer a clue if customer is having ISDN calls denied with an unexpected intercept tone.	If customer is complaining of unexpected intercept tones when accessing ISDN trunks or PRI endpoints and no other cause can be found, escalate the problem and provide the next tier with this Error Log information.
3906	Protocol detail; may offer a clue if customer is having ISDN calls denied with an unexpected intercept tone.	If customer is complaining of unexpected intercept tones when accessing ISDN trunks or PRI endpoints and no other cause can be found, escalate to the problem and provide the next tier with this Error Log information.

Continued on next page

Table 9-202. Descriptions and Recommendations for Error Types 3840-3928 — *Continued*

Error Code	Description	Recommendation
3909	A request to use a network service has been made, but the network has rejected the request because the requested service is not implemented.	Follow the recommendations listed above for error type 3890.
3928	A call was denied because of a basic incompatibility between the type of call and either the facilities selected by the routing pattern or the called user itself.	This error might be helpful as a clue if the customer complains of receiving unexpected intercept tone after accessing ISDN trunks or PRI endpoints. Determine the trunk group from the circuit pack and port number (in the aux data field) and then check the BCC fields of the pertinent routing patterns. Also, investigate whether or not the calling and called endpoints are compatible (for example, some ISDN switches may not allow a voice station to call a data extension).

System Technician-Demanded Tests: Descriptions and Error Codes

Always investigate tests in the order presented in the table below when inspecting errors in the system. By clearing error codes associated with the *Primary Signaling Link Hardware Check*, for example, you may also clear errors generated from other tests in the testing sequence.

Order of Investigation	Short Test Sequence	Long Test Sequence	D/ND*
Primary Signaling Link Hardware Check (#636)	X	X	ND
Secondary Signaling Link Hardware Check (#639)	X	X	ND
Remote Layer 3 Query Test (#637)	X	X	ND

* D = Destructive; ND = Nondestructive

Primary Signaling Link Hardware Check (#636)

The ISDN-PRI Signaling Group D-Channel port depends on the health of the TN464C/D UDS1 Interface circuit pack on which it resides. This test will fail if there are problems with either the ISDN-PRI Primary D-channel port or the UDS1 circuit pack. If there are problems with the ISDN-PRI Primary Signaling Channel port (ISDN-LNK), also investigate the UDS1 circuit pack (UDS1-BD).

Table 9-203. TEST #636 Primary Signaling Link Hardware Check

Error Code	Test Result	Description/ Recommendation
	ABORT	Internal System Error 1. Retry the command at 1 minute intervals a maximum of 5 times. 2. If the test continues to abort, escalate the problem.
1700	ABORT	Rollabout video abort. The PRI terminal adapter associated with the primary D-channel port is detached from the circuit pack. This is a normal abort when the rollabout video feature is enabled. To complete test on this port, either: 1. Re-attach the disconnected PRI terminal adapter, or 2. Disable the rollabout video feature on this board by entering **change ds1 UUCSS** and set field ‘‘Alarm when PRI Endpoint Detached?” to “y.’’
8	FAIL	There is a problem with the UDS1 TN464C/D Circuit Pack or the ISDN-PRI Signaling Channel (D-Channel). No ISDN trunk or PRI endpoint calls can be made until the problem is resolved. 1. Consult the procedures for the UDS1 TN464C/D Circuit Pack (UDS1-BD) and the ISDN-PRI Signaling Channel (ISDN-LNK).
	PASS	The basic physical connectivity of the primary D-channel is intact and functional. One might try this test repeatedly to ensure the link is up and to uncover any transitory problems.

Remote Layer 3 Query (#637)

This test will query the far-end switch or terminal adapter to determine if the signaling connection is functioning properly at Layer 3. It will select a B-channel in the in-service or maintenance service state and send an ISDN Layer 3 SERVice message, which requires a response from the far end (similar to performing Test #256 on an ISDN trunk. The test will not be performed if there are no B-channels in an appropriate ISDN service state (as when none are administered or they are all out of service).

NOTE:
The service state can be displayed by using the **status trunk <trunk group/trunk member>** or **status pri-endpoint** command.

As is the case with Test #256 for an ISDN trunk, a PASS only indicates that a message was composed and sent to the far-end switch or terminal adapter. The ISDN PRI Specification allows up to 2 minutes for a response. Check the Error Log for ISDN-SGR (ISDN-PRI Signaling Group) errors of type 2305 for evidence of a Remote Layer 3 Query failure.

The previous tests check the health of the D-channels and UDS1 Interface Circuit Packs. As shown in Figure 9-60 below, this test goes one step further by checking the communication path from the processor from the processor, through the Packet Bus and TN464C/D UDS1 Interface circuit pack, and on to the far-end switch or terminal adapter. A special ISDN message is sent to the far-end switch or terminal adapter, which must respond within a specified amount of time. This test is designed to ensure that the communication path between the switch and the far-end is up and operational, and that the two endpoints can properly exchange ISDN control messages.

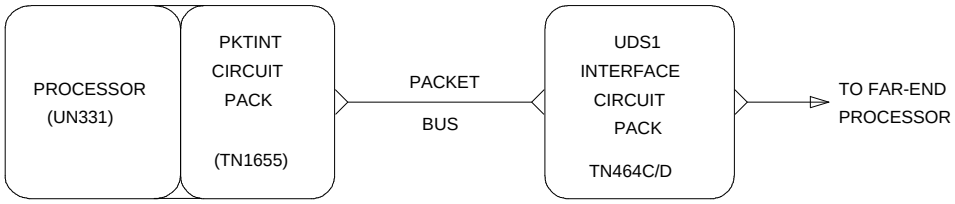

Figure 9-60. Remote Layer 3 Query (Test #637)

This figure illustrates a UDS1 Interface Circuit Pack located in the PPN. When the UDS1 board is located in an EPN, there is additional Port Network Connectivity hardware connecting the packet busses of the PPN and EPN. Examples of such hardware are the Center Stage Switch and fiber-optic cables.

Table 9-204. TEST #637 Remote Layer 3 Query

Error Code	Test Result	Description/ Recommendation
1006	ABORT	There are no associated B-channels in an ISDN ‘‘in-service’’ or ‘‘maintenance’’ service state. This is a NORMAL ABORT. 1. Administer or release an ISDN trunk or PRI endpoint before retrying the test. For an ISDN trunk, use the **status trunk** group#/member# command to verify the ISDN trunk state. For a PRI endpoint use **status pri-endpoint** extension. Then, retry this test when at least one B-channel is in the "in-service" or "maintenance" states.
1113	ABORT	The Signaling Channel is down. Therefore no messages can be sent to the far-end switch or terminal adapter. 1. Examine the results of Tests #636 and #639 and follow recommendations provided there. 2. If these tests pass, escalate the problem.
2100	ABORT	Could not allocate the necessary system resources to run this test. 1. Retry the command at 1 minute intervals a maximum of 5 times. 2. If the test continues to abort, escalate the problem.
2500 or none	ABORT	Internal System Error OR Administration Problem 1. Determine if any B-channels are administered. If there are none, then this is a normal ABORT, since this test cannot run unless at least one B-channel is administered. If at least one B-channels is administered, there is an internal system error. Retry the command at 1-minute intervals a maximum of 5 times. 2. If the test continues to abort, escalate the problem.

Continued on next page

Table 9-204. TEST #637 Remote Layer 3 Query — *Continued*

Error Code	Test Result	Description/ Recommendation
	FAIL	Internal System Error. See description of ABORT with error code 2500.
	PASS	A message was composed and sent to the far-end switch or terminal adapter. The ISDN PRI specification allows up to 2 minutes for a reply. Check the Error Log for ISDN-SGR (ISDN-PRI Signaling Group) for errors of type 2305 for evidence of a Remote Layer 3 Query failure. If no new errors were logged since this test was run, then this switch and the far-end switch or terminal adapter can exchange call control messages. If there is still a problem with a particular ISDN trunk or PRI endpoint, busyout the trunk and run the long test sequence, paying particular attention to the results of Test #258 (ISDN Test Call). If the problem persists and the above action has not revealed the cause, escalate the problem.

Secondary Signaling Link Hardware Check (#639)

The ISDN-PRI Signaling Group D-Channel port depends on the health of the TN464C/D UDS1 Interface circuit pack on which it resides. This test will fail if there are problems with either the ISDN-PRI Secondary D-channel port or the UDS1 circuit pack. This test will abort if a Secondary D-channel is not administered for the signaling group. If there are problems with the ISDN-PRI Secondary Signaling Channel port (ISDN-LNK), also investigate the UDS1 circuit pack (UDS1-BD).

Table 9-205. TEST #639 Secondary Signaling Link Hardware Check

Error Code	Test Result	Description/ Recommendation
	ABORT	Internal System Error 1. Retry the command at 1 minute intervals a maximum of 5 times. 2. If the test continues to abort escalate the problem.
1132	ABORT	The Secondary D-Channel is not administered for this Signaling Group. This is a NORMAL ABORT. Only a Primary D-Channel must be administered for a Signaling Group.
8	FAIL	There is a problem with the TN464C/D UDS1 Interface circuit pack or the ISDN-PRI Secondary Signaling Channel (D-Channel). No ISDN trunk or PRI endpoint calls can be made until the problem is resolved. 1. Consult the procedures for the UDS1 TN464C/D Circuit Pack (UDS1-BD) and the ISDN-PRI Signaling Channel (ISDN-LNK).
	PASS	The basic physical connectivity of the Signaling Group's Secondary D-channel is intact and functional. Try this test repeatedly to ensure the link is up and to uncover any transitory problems.

ISDN-TRK (DS1 ISDN Trunk)

MO Name As It Appears in Alarm Log	Alarm Level	Initial System Technician Command to Run (a)	Full Name of MO
ISDN-TRK (b)	MAJOR (c)	test port UUCSSpp l	DS1 ISDN Trunk
ISDN-TRK	MINOR	test port UUCSSpp l	DS1 ISDN Trunk
ISDN-TRK	WARNING	test port UUCSSpp sh	DS1 ISDN Trunk

a. UU is the universal cabinet number (1 for PPN, 2 -44 for EPN s). C is the carrier designation (A, B, C, D, or E). SS is the number of the slot in which the circuit pack resides (01 to 21). pp is the two digit port number (01, 02, ...).

b. For additional repair information, see also DS1-BD for TN767 ports and UDS1-BD for TN464C/D ports.

c. A MAJOR alarm on a trunk indicates that alarms on these trunks are not downgraded by the **set options** command and that at least 75% of the trunks in this trunk group are alarmed.

NOTE:
Many trunk problems are caused by incorrect settings of parameters on the trunk group administration form. Settings must be compatible with the local environment and with parameter settings on the far-end. Refer to *DEFINITY Communications System Generic 3 V2 Implementation,* 555-230-653, for information on how to administer trunks. The Application Notes section of that book shows the correct settings for administrable timers and other parameters on a country-by-country basis.

NOTE:
See the figures in the ISDN-SGR section of this chapter for an illustration of the principles described below. Throughout this section, the general term DS1 circuit pack refers to TN464 and TN767 series circuit packs.

A DS1 ISDN trunk is a 64 Kbps bearer channel used to transmit digitized voice or data traffic. These trunks, or B-channels, use a separate channel, the D-channel for call-control signaling. This mode of operation is known as out-of-band signaling, as opposed to in-band robbed-bit signaling, in which signaling is carried in the same channel as the voice or data traffic. One D-channel, or ISDN signaling link (ISDN-LNK), carries signaling messages for several B-channels, forming an ISDN signaling group (ISDN-SGR).

A B-channel may be a port on either a TN464 series UDS1 circuit pack or a TN767 series DS1 Interface circuit pack.

Two types of DS1 interfaces exist:

- 24 DS0 channels on a 1.544 Mbps link
- 31 DS0 channels + 1 framing channel on a 2.048 Mbps link

  The 32-channel mode is supported only on TN464 series circuit packs and on G3r V2 systems. This mode is officially known as CEPT1, but is referred to here as DS1 for simplicity.

On 24-channel interfaces, any of the first 23 ports on the DS1 circuit packs can be a B-channel. On the TN464C/D UDS1 circuit pack, the 24th port may be used as a B-channel or as a D-channel depending on the type of ISDN-PRI signaling group (FAS or NFAS) implemented on the circuit pack. For more details, refer to ISDN-SGRP in this chapter. On the TN767 DS1 circuit pack, all 24 ports are used as B-channels since D-channel signaling is not supported on the TN767 circuit pack. The signaling for these B-channels is done over a D-channel located on a UDS1 TN464C/D board.

On 32 channel interfaces, any of ports 1-15 and 17-31 on the DS1 interface circuit pack can be a B-channel. The 16th port may be used as a B-channel or as a D-channel depending on the type of ISDN-PRI signaling group (FAS or NFAS) to which it belongs. For more details, refer to ISDN-SGRP and DS1-BD in this chapter.

For interfaces using country protocol 1 on the DS1 circuit pack administration form (including US), the signaling protocol used for the maintenance of the B-channel is defined by the AT&T ISDN-PRI specification. For interfaces using country protocols other than 1, the signaling protocol used for the maintenance of the B-channel is defined by the CCITT ISDN-PRI Specification.

There are five possible service states for a B-channel. the service state is negotiated with the far-end switch, changes over time, and may have a far-end and near-end components. The service state is initialized to out-of-service/Far-End and an attempt is made to negotiate it to in-service.

The AT&T ISDN-PRI Specification defines the possible SERVICE STATES for a B-channel. The service state is negotiated with the far-end switch, changes over time, and may have a far-end or near-end component. The service state is initialized to the Out-Of-Service/Far-End state and an attempt is made to negotiate it to In-Service.

NOTE:
The service state of a particular DS1 ISDN Trunk B-channel can be displayed by issuing the **status trunk** *trunk group/trunk member* system technician command.

When a call is present, the specification defines the permissible call states as well. There are tests in the short and long test sequences for DS1 ISDN Trunk designed to audit these states and ensure agreement between both ends of the PRI connection.

Alarming Based on Service States

A warning alarm is logged against a DS1 ISDN B-channel trunk when it is placed in the Maintenance/Far-End or Out-Of-Service/Far-End states, during which the trunk is unusable for outgoing calls. When a warning alarm is present, use **status trunk** group#/member# command to determine the exact state. Other alarms can be diagnosed by using the short and/or long test sequences. Note that an ISDN B-channel trunk can be placed in a Far-End service state by either action taken by the far-end switch or by failure of the far-end switch to respond. For example, if the far-end does not respond to a Remote Layer 3 Query (Test #637 for ISDN-SGR), the associated DS1 ISDN trunk B-channels will be placed in the Maintenance/Far-End service state.

As a port on a DS1 circuit pack (DS1-BD or UDS1-BD), and as part of a signaling group dependent on a D-channel (ISDN-LNK) for signaling, operation of the ISDN-TRK is dependent on the health of these other maintenance objects. The ISDN D-channel in turn depends on the Packet Bus (PKT-BUS) for transmission through the system. Keep this hierarchy of dependencies in mind when diagnosing problems.

DS1 ISDN Trunk Service States

The **status trunk** command displays the following possible service states for ISDN trunks. Table 9-206 on page I-37 gives recommended procedures for each state. Figure 9-61 (following the table) shows typical progressions from one service state to another.

- In-Service (INS)

  The B-channel is in its normal operating state.

- Out-of-Service/Far-End (OOS/FE)

  A B-Channel is initialized to this state when administered. The switch sends messages to the far-end to negotiate the B-channel into service. If the far-end does not respond to the messages within a certain time period, then the service state remains out-of-service and maintenance will periodically resend the messages. The trunk is unusable for incoming and outgoing calls.

- Out-of-Service/Near-End (OOS/NE)

  This is the state of the trunk when the NPE Crosstalk Test fails or when the trunk is busied out by system technician. In this state, the trunk is unusable for incoming or outgoing calls. No messages are sent to the far-end until the signaling link comes back into service or the trunk is released by system technician.

- Maintenance/Far-End (MTC/FE)

  This state is reached when the far-end does not respond to messages sent over the signaling link for a particular trunk after a certain amount of time. This state is different from OOS/FE since the signaling link must have

initially been up and the B-Channels in-service. The switch will periodically send messages to the far-end to try to negotiate the trunk (B-channel) into service. The trunk is unusable for outgoing calls but will service incoming call requests from the far-end. Note that transitions into MTC/FE do not drop stable calls. Therefore, if the service state changes from in-service to MTC/FE, then stable calls are unaffected.

- Maintenance/Near-End (MTC/NE)

  The trunk (B-channel) is in this state if the signaling channel (ISDN-LNK) is busied out by system technician. The trunk (B-channel) is also temporarily in this state if system technician has issued a **test trunk** *trunk group/trunk member long* command. This command will execute the ISDN-PRI test call. This test will change the state of the trunk member to MTC/NE for the duration of the test unless a call request comes in from the far-end. In that case, the test would abort. Note that transitions into MTC/NE do not drop stable calls. In this state, the B-Channel is not usable for new incoming or outgoing calls.

- Pending States

  In addition to one of the above components, the service state may have a *pending* component, indicating that the switch is waiting for a reply from the far-end. These service states remain in effect until either a response is received or the allotted waiting time expires.

  — Pending-in-Service

    The near-end is waiting for a response from the far-end to a B-channel maintenance message requesting that the B-channel be transitioned to in-service.

  — Pending-Maintenance

    This state is supported only by systems using country protocol 1 (including US). The near-end is waiting for a response from the far-end to a maintenance message requesting that the B-channel be transitioned to the maintenance service state.

- Call Activity States

  The in-service service state also has a call activity component.

  — Active

    A call is connected over the B-channel (for example, *in-service/active*).

  — Idle

    There is no call currently on the B-channel (for example, *in-service/idle*).

Table 9-206. TEST #161 Loop Around Test

Service State	Alarm*	Possible Cause	Possible Solution
out-of-service/NE	Warning	Trunk is demand busied out.	Enter **release trunk** grp#/mbr#.
	Minor	NPE Crosstalk Test (#6) failed.	Replace DS1/UDS1 circuit pack.
	None	DS1 or UDS1 circuit pack lost its signal.	Is the DS1/UDS1 circuit pack or cable removed? Is the far-end switch restarting? Check circuit pack using procedures in DS1-BD or UDS1-BD.
out-of-service/FE	Warning	Unadministered far-end	Administer corresponding trunk on far-end switch.
	Warning	The far-end trunk is busied out.	Check the status of the far-end switch.
pending-in-service, pending-maint	None	Maintenance message was sent and the switch is waiting up to 2 min. for a reply from the far-end.	Wait 2 minutes and check service state after the pending state has cleared.
maint-NE	None	ISDN test call in progress (**test trunk long** and **test isdn-testcall** commands)	Wait several minutes for test to finish and check status again.
	None	System link has been busied out by command.	Check link status. Release link with **release link** link#.

Continued on next page

Table 9-206. TEST #161 Loop Around Test — *Continued*

Service State	Alarm*	Possible Cause	Possible Solution
maint-FE	Warning	Signaling channel has been down for over 90 sec.	Consult ISDN-SGRP and/or ISDN-LNK. Far-end signaling channel may be busied out, or the far-end switch may currently be restarting.
	Warning	Repeated failure of far end to respond to messages.	Maintenance software will periodically try to resend messages. You can speed the process with **test trunk** grp#/mbr# and/or **test signaling-gr** #.
	Warning	The far-end trunk is being tested.	Check status of the far-end switch. Wait for testing to finish.
in-service	None	Normal operating state	

* ISDN-TRK alarms; alarms against other objects may also be present.

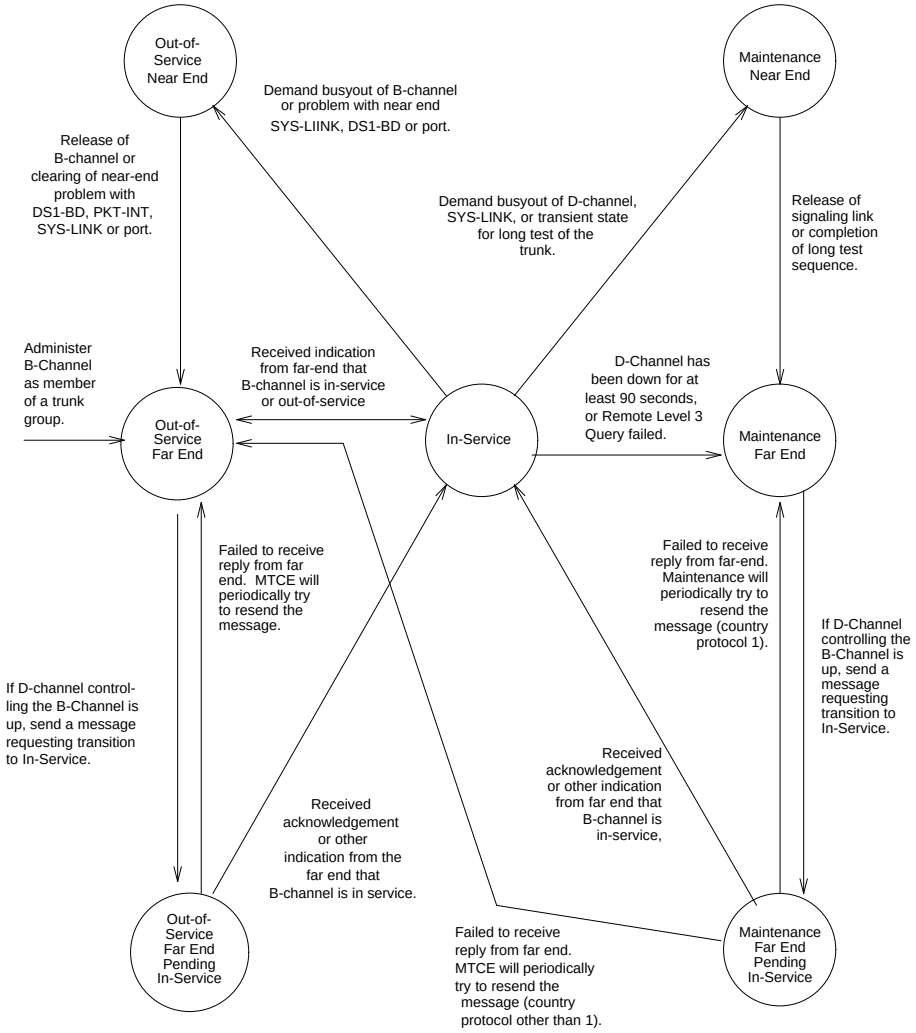

Figure 9-61. Common Progressions in Service States

Hardware Error Log Entries and Test to Clear Values

DS1 ISDN Trunk Error Log Entries					
Error Type	**Aux Data**	**Associated Test**	**Alarm Level**	**On/Off Board**	**Test to Clear Value**
0*	0	Any	Any	Any	test port *UUCSSpp*
1(a)	Any	None			test port *UUCSSpp*
15(b)	Any	Audit and Update Test (#36)			
18	0	busyout trunk *grp/mbr*			release trunk *grp/mbr*
129(c)		None	WARNING	OFF	test port *UUCSSpp*
130(d)		None	WARNING	ON	test port *UUCSSpp*
257(e)	Any	None			test port *UUCSSpp*
513(f)	Any	None	WARNING	OFF	test port *UUCSSpp*
769(e)	Any	None			test port *UUCSSpp*
1281	Any	Conference Circuit Test (#7)	MAJ/MIN/WRN**	ON	test port *UUCSSpp* l r 4
1537	Any	NPE Crosstalk Test (#6)	MAJ/MIN/WRN**	ON	test port *UUCSSpp* l r 3
1793(g)	Any	None			test port *UUCSSpp*
3073(h)	Any	Service State Audit (#256)			test port *UUCSSpp*
3585(i)	Any	None			none
3841(j)	Any	None	WARNING	OFF	None

* Run the Short Test Sequence first. If all tests pass, run the Long Test Sequence. Refer to the appropriate test description and follow the recommended procedures.

† Major or minor alarms on this MO may be downgraded to Warning alarms based on the value used in the set options command.

Notes:

a. These error types indicate a disagreement between this switch and the switch at the other end of the trunk connection with regard to the ISDN call state of the DS1 ISDN Trunk. This switch will automatically try to recover by clearing the call, (that is, call will be torn down). You can use the **status trunk** group#/member# command to determine the state of the trunk.

   When running the Short Test Sequence of tests, pay close attention to the results of the Call State Audit Test (#257).

b. This is a software audit error that does not indicate any hardware malfunction. Run the Short Test Sequence and investigate associated errors (if any).

c. The far-end switch changed its ISDN service state to either *out-of-service* or *maintenance*. This may be a temporary condition due to testing of that trunk by the far-end, or a hardware problem with the trunk. Outgoing calls will not be allowed over the trunk. To investigate the status of the trunk, issue the **status trunk** group#/member# command.

d. This error type indicates that the circuit pack has been removed or has been insane for more than 11 minutes. To clear the error, reinsert or replace the circuit pack.

e. These error types indicate a disagreement between this switch and the switch at the other end of the trunk connection with regard to the ISDN service state of the DS1 ISDN Trunk. This switch will automatically try to recover by performing a service state audit. You can use the **status trunk** group#/member# command to determine the state of the trunk.

   When running the Short Test Sequence, pay close attention to the results of the Service State Audit Test (#256).

f. This trunk is not recognized by the far-end switch. Investigate the trunk administration for both switches and make changes as necessary.

g. This error indicates a failure of the DS1/UDS1 Interface circuit pack. When running the Short Test Sequence, the results of the Signaling Link State Check Test (#255) are important.

h. Service State Audit attempt failed (see Test #256). The trunks will not be usable for any outgoing calls (although incoming calls will be accepted) until the test passes and the trunk state is changed to in-service (use **status trunk** group#/member# to investigate trunk status).

i. Error Type 3585 appears when the switch receives an ISDN RESTART message for an ISDN trunk that is not idle. Calls are not typically cleared with the RESTART message. Therefore, this error type may be associated with a dropped call report from a user.

   The following Aux Data values for Error Type 3585 represent the trunk's ISDN call state at the time the unexpected request to restart the channel was received from the remote switch. This information can be useful if dropped calls (cutoffs) are being reported by users of the ISDN-PRI trunks.

The meanings of Aux Data values of concern are shown below; any others can be ignored.

Aux Data	Cause
10	A call in a stable, talking state was cleared unexpectedly by the far-end with an ISDN RESTART message. This state is called the "active" state.
4 7 8 260 263	A call that has not reached the active state, but has at least reached a ringing state, was cleared unexpectedly by the far-end with an ISDN RESTART message.
1 3 6 9 265	A call that has not yet reached a ringing state was cleared unexpectedly by the far-end with an ISDN RESTART message.
11 12 19 531 267 268	A call that was in the process of clearing anyway has been cleared by the far-end with an ISDN RESTART message. If this condition occurs frequently, it may mean that the far-end is attempting to clear trunks that it thinks are in a ‘‘hung’’ state. The RESTART message brings the trunk to an idle condition.

j. An ISDN trunk selected by the near-end has been rejected 10 times by the far-end without a successful call. This may indicate a service state mismatch between the near-end and far-end for this trunk that is effecting the end user (that is, customer receives unexpected intercept tones when accessing ISDN trunks). This may indicate that the ISDN trunk is not administered on the far-end.

   The Aux field contains the physical name of the ISDN trunk in decimal. Then, verify that the far-end has this trunk administered.

   The Warning alarm will be retired automatically whenever an outgoing or incoming call that uses this trunk is answered by the called endpoint. If problems persist, then busy-out the ISDN trunk to take it out of the hunt group.

System Technician-Demanded Tests: Descriptions and Error Codes

Always investigate tests in the order presented in the table below when inspecting errors in the system. By clearing error codes associated with the *NPE Crosstalk Test*, for example, you may also clear errors generated from other tests in the testing sequence.

Order of Investigation	Short Test Sequence	Long Test Sequence	D/ND*
NPE Crosstalk Test (#6)		X	ND
Conference Circuit Test (#7)		X	ND
Audit and Update Test (#36)	X	X	ND
Signaling Link State Check Test (#255)	X	X	ND
Service State Audit Test (#256)	X	X	ND
Call State Audit Test (#257)	X	X	ND
ISDN Test Call Test (#258)		X	ND

* D = Destructive; ND = Nondestructive

NPE Crosstalk Test (#6)

One or more Network Processing Elements (NPE s) reside on each circuit pack with a TDM Bus interface. The NPE controls port connectivity and gain, and provides conferencing functions on a per port basis. The NPE Crosstalk Test verifies that this port's NPE channel talks on the selected time slot and never crosses over to time slots reserved for other connections. If the NPE is not working correctly, one-way and noisy connections may be observed. This test is usually only part of a port's long test sequence and takes about 20 to 30 seconds to complete.

NOTE:
The TN464C/D UDS1 circuit pack has one SCOTCH-NPE chip instead of several NPE chips.

Table 9-207. TEST #6 NPE Crosstalk Test

Error Code	Test Result	Description/ Recommendation
	ABORT	Could not allocate the necessary system resources to run this test. 1. Retry the command at 1-minute intervals for a maximum of 5 times. 2. If the test continues to abort, escalate the problem.
1000	ABORT	System resources required to run this test are not available. The port may be in use on a valid call. Use **status station** or **status trunk** commands to determine when the port is available for testing. 1. Retry the command at 1-minute intervals for a maximum of 5 times. 2. If the test continues to abort and the port is not in use, escalate the problem.
1001	ABORT	Could not allocate the necessary system resources to run this test. 1. Retry the command at 1-minute intervals for a maximum of 5 times. 2. If the test continues to abort, escalate the problem.

Continued on next page

Table 9-207. TEST #6 NPE Crosstalk Test — *Continued*

Error Code	Test Result	Description/ Recommendation
1002	ABORT	The system could not allocate time slots for the test. The system may be under heavy traffic conditions or it may have time slots out-of-service due to TDM-Bus errors. Refer to TDM-Bus Maintenance to diagnose any active TDM-Bus errors. 1. If system has no TDM-Bus errors and is not handling heavy traffic, repeat test at 1-minute intervals for a maximum of 5 times. 2. If the test continues to abort, escalate the problem.
1003	ABORT	The system could not allocate a tone receiver for the test. The system may be oversized for the number of tone detectors present or some tone detectors may be out-of-service. 1. Look for TTR-LEV errors in the Error Log. If present, refer to TTR-LEV Maintenance documentation. 2. Look for TONE-PT errors in the Error Log. If present, refer to TONE-PT Maintenance documentation. 3. If neither condition exists, retry the test at 1-minute intervals for a maximum of 5 times. 4. If the test continues to abort, escalate the problem.
1004	ABORT	The port has been seized by a user for a valid call. Use **status station** or **status trunk** commands to determine when the port is available for testing. 1. Retry the command at 1-minute intervals for a maximum of 5 times. 2. If the test continues to abort and the port is not in use, escalate the problem.
1018	ABORT	Maintenance is disable on this trunk. 1. Enable maintenance by entering ‘‘y’’ in the ‘‘Maintenance Tests?’’ field on page 2 of the **change trunk-group** form.
1117	ABORT	A service state audit message is outstanding. 1. Wait 2 minutes and then try again.

Continued on next page

Table 9-207. TEST #6 NPE Crosstalk Test — *Continued*

Error Code	Test Result	Description/ Recommendation
2000	ABORT	Response to the test request was not received within the allowable time period. 1. Retry the command at 1-minute intervals for a maximum of 5 times. 2. If the test continues to abort, escalate the problem.
2020	ABORT	The test did not run due to an already existing error on the specific port or a more general circuit pack error. 1. Examine Error Log for existing errors against this port or the circuit pack and attempt to diagnose the already existing error.
2100	ABORT	Could not allocate the necessary system resources to run this test. 1. Retry the command at 1-minute intervals for a maximum of 5 times. 2. If the test continues to abort, escalate the problem.
Any	FAIL	The NPE of the tested port was found to be transmitting in error. This will cause noisy and unreliable connections. The ISDN-TRK is moved to out-of-service/near-end state. 1. Replace the circuit pack.
	PASS	The port is able to communicate over the TDM Bus.

Conference Circuit Test (#7)

One or more Network Processing Elements (NPE s) reside on each circuit pack with a TDM Bus interface. The NPE controls port connectivity and gain, and provides conferencing functions on a per port basis. The Conference Circuit test verifies that the NPE channel for the port being tested can correctly perform the conferencing function. The NPE is instructed to listen to several different tones and conference the tones together. The resulting signal is then measured by a tone detector port. If the level of the tone is within a certain range, the test passes.

NOTE:
The TN464C/D UDS1 circuit pack has one SCOTCH-NPE chip instead of several NPE chips.

Table 9-208. TEST #7 Conference Circuit Test

Error Code	Test Result	Description/ Recommendation
	ABORT	Could not allocate the necessary system resources to run this test. 1. Retry the command at 1-minute intervals for a maximum of 5 times. 2. If the test continues to abort, escalate the problem.
1000	ABORT	System resources required to run this test are not available. The port may be in use on a valid call. Use **status station** or **status trunk** commands to determine when the port is available for testing.
1004	ABORT	The port has been seized by a user for a valid call. Use status station or status trunk to determine when the port is available for testing. 1. Retry the command at 1-minute intervals for a maximum of 5 times. 2. If the test continues to abort and the port is not in use, escalate the problem.
1018	ABORT	Maintenance is disable on this trunk. 1. Enable maintenance by entering ‘‘y’’ in the ‘‘Maintenance Tests?’’ field on page 2 of the **change trunk-group** form.

Continued on next page

Table 9-208. TEST #7 Conference Circuit Test — *Continued*

Error Code	Test Result	Description/ Recommendation
1020	ABORT	The test did not run due to an already existing error on the specific port or a more general circuit pack error. 1. Examine Error Log for existing errors against this port or the circuit pack and attempt to diagnose the already existing error.
2000	ABORT	Response to the test request was not received within the allowable time period.
2100	ABORT	Could not allocate the necessary system resources to run this test. 1. Retry the command at 1-minute intervals for a maximum of 5 times. 2. If the test continues to abort, escalate the problem.
Any	FAIL	The NPE of the tested port did not conference the tones correctly. This will cause noisy and unreliable connections. 1. Replace the circuit pack.
	PASS	The port can correctly conference multiple connections. User-reported troubles on this port should be investigated using other port tests and examining station, trunk, or external wiring.

Audit and Update Test (#36)

This test sends port level translation data from switch processor to the DS1 interface circuit pack to assure that the trunk's translation is correct. The port audit operation verifies the consistency of the current state of trunk kept in the DS1 interface circuit pack and in the switch software

Table 9-209. TEST #36 Audit and Update Test

Error Code	Test Result	Description/ Recommendation
1018	ABORT	Maintenance is disable on this trunk. 1. Enable maintenance by entering ''y'' in the ''Maintenance Tests?'' field on page 2 of the **change trunk-group** form.
	ABORT	Internal System Error
2000	ABORT	Response to the test request was not received within the allowable time period.
2100	ABORT	Could not allocate the necessary system resources to run this test.
	FAIL	Test failed due to internal system error. 1. Retry the command at 1-minute intervals for a maximum of 5 times. 2. If the test continues to fail, escalate the problem.
	PASS	Trunk translation has been updated successfully. The current trunk states kept in the DS1 interface circuit pack and switch software are consistent.

Signaling Link State Check Test (#255)

The DS1 ISDN Trunk depends on the health of the appropriate TN464C/D UDS1 Interface circuit pack or TN767 DS1 interface circuit pack for proper operation. It also depends on the ISDN-PRI D-channel (ISDN-LNK) trunk. This test checks the status of those critical elements

Table 9-210. TEST #255 Signaling Link State Check Test

Error Code	Test Result	Description/ Recommendation
None	ABORT	Internal System Error
0	ABORT	
1114	ABORT	The signaling link is in a transitional state. 1. Retry the command at 1-minute intervals for a maximum of 5 times. 2. If the test continues to abort, escalate the problem.
1018	ABORT	Maintenance is disable on this trunk. 1. Enable maintenance by entering ‘‘y’’ in the ‘‘Maintenance Tests?’’ field on page 2 of the **change trunk-group** form.
4	FAIL	There is a problem with the Signaling Channel. 1. Consult the procedures for the ISDN-PRI Signaling Group (ISDN-SGRP). Further information may also be obtained by consulting the procedures for the ISDN-PRI Signaling Channel (ISDN-LNK).
8	FAIL	There is a problem with the DS1 interface circuit pack. 1. Consult the procedures for the appropriate DS1 interface circuit pack (DS1-BD or UDS1-BD).
	PASS	The signaling link hardware is OK.

Service State Audit (#256)

As noted in the General description for DS1 ISDN Trunk, these trunks may be in one of several service states. This test performs a Service State Audit with the far-end switch.

For interfaces using country protocol 1 (including the US) the Service State Audit executes in all trunk service states. A message is sent to the far-end switch to ensure that both sides agree on the service state. A PASS for this test simply means that the message has been successfully sent. Two minutes are allowed for a reply. If no reply is received within that 2 minute window, the message is sent out again. If that attempt fails, an error type 3073 will be logged and the switch will attempt another Service State Audit every 15 minutes. If the trunk was initially in-service, it is placed in the maintenance/far-end state. No outgoing calls will be placed over this trunk, but incoming calls will be accepted. If an incoming call is presented with the trunk in such a state, a Service State Audit is immediately be attempted (the switch does not wait for the 15-minute cycle, but tries to recover immediately).

For interfaces not using country protocol 1, the Service State Audit executes only if the trunk is in the out-of-service/far-end state. A message is sent to the far-end switch to attempt to bring the trunk back into the in-service state. A PASS for this test simply means that the message has been successfully sent. Two minutes are allowed for a reply. If no reply is received within that two minute window, the message is sent out again. If again no response is received within two minutes, the trunk remains in the out-of-service/far-end state. The switch will attempt another Service State Audit after an hour has passed.

To investigate the service state of the DS1 ISDN Trunk, issue the **status trunk** group#/member# command.

Table 9-211. TEST #256 Service State Audit Test

Error Code	Test Result	Description/ Recommendation
1000	ABORT	Resources required to run this test were not available. The port may be on a valid call or initializing. Use **status station** or **status trunk** to determine when the trunk is available for testing. Check the results of Test #255.
1018	ABORT	Maintenance is disable on this trunk. 1. Enable maintenance by entering ‘‘y’’ in the ‘‘Maintenance Tests?’’ field on page 2 of the **change trunk-group** form.

Continued on next page

Table 9-211. TEST #256 Service State Audit Test — *Continued*

Error Code	Test Result	Description/ Recommendation
1113	ABORT	The signaling link has failed, so the system cannot send any messages on behalf of this trunk. 1. Check the results of Test #255 and consult procedures for ISDN-SGR in this chapter.
1114	ABORT	The signaling link is in a transitional state. 1. Retry the command at 1-minute intervals for a maximum of 5 times. 2. If the test continues to abort, escalate the problem.
1116	ABORT	The trunk is not in the out-of-service/far-end state, which is required to run this test on systems using a country protocol other than 1.
1117	ABORT	A service state audit message is outstanding. 1. Wait 2 minutes and then try again.
2100	ABORT	Could not allocate the necessary system resources to run this test. 1. Retry the command at 1-minute intervals for a maximum of 5 times. 2. If the test continues to abort, escalate the problem.
1113	FAIL	The signaling link has failed; the system cannot send any messages on behalf of this trunk. 1. Consult procedures for ISDN-SGR (ISDN-PRI Signaling Group) and ISDN-LNK (ISDN Signaling Link Port).

Continued on next page

Table 9-211. TEST #256 Service State Audit Test — *Continued*

Error Code	Test Result	Description/ Recommendation
	FAIL	Internal System Error 1. Retry the command at 1-minute intervals for a maximum of 5 times. 2. If the test continues to fail, escalate the problem.
	PASS	Wait 4 minutes and then check the Error Log for any new errors of type 3073. If there are none, then both sides of the ISDN connection agree on the service state; the negotiation succeeded. If there is a new 3073 error, then the negotiation failed (the far-end switch twice failed to respond within 2 minutes). The switch will automatically retry every 15 minutes. If the trunk was initially in-service, it is now placed in the maintenance/far-end state. Incoming calls will be accepted, but no outgoing calls can be originated. If an incoming call is presented, another Service State Audit will be immediately performed in an attempt to put the DS1 ISDN Trunk in the proper state.

Call State Audit Test (#257)

If a call is active on the trunk, the switches on both sides of the connection should agree on the ISDN state of the call, as defined in the ISDN Protocol Specification. This test audits internal call state data by querying the far-end switch as to the ISDN state of the call. It can be helpful when trying to clear a hung call. If the internal call state data on the near-end switch is different than that of the far-end switch, then *the call will be torn down.*

As with Test #256 (Service State Audit), a PASS simply means that an appropriate message was composed and sent to the far-end switch. The ISDN Specification allows up to 2 minutes for a reply. If a reply is not received within the 2 minute window, a protocol time-out violation will be recorded in the error log against the associated signaling channel (ISDN-LNK, error type 1).

Table 9-212. TEST #257 Call State Audit Test

Error Code	Test Result	Description/ Recommendation
1018	ABORT	Maintenance is disable on this trunk. 1. Enable maintenance by entering ‘‘y’’ in the ‘‘Maintenance Tests?’’ field on page 2 of the **change trunk-group** form.
1019	ABORT	An audit is already in progress. 1. Wait 2 minutes and try again.
1113	ABORT	The signaling link has failed, so the system cannot send any messages on behalf of this trunk. 1. Check the results of Test #255 (Signaling Link State Check).
1114	ABORT	The signaling link is in a transitional state. 1. Retry the command at 1-minute intervals for a maximum of 5 times. 2. If the test continues to abort, escalate the problem.
1116	ABORT	The trunk is in an out-of-service ISDN service state. 1. A call cannot be present if the trunk is in an ISDN out-of-service state, so a call state audit would be inappropriate. No action necessary. (Use the **status trunk** group#/member# command to investigate the ISDN state of the trunk).

Continued on next page

Table 9-212. TEST #257 Call State Audit Test — *Continued*

Error Code	Test Result	Description/ Recommendation
2100	ABORT	Could not allocate the necessary system resources to run this test. 1. Retry the command at 1-minute intervals for a maximum of 5 times. 2. If the test continues to abort, escalate the problem.
	FAIL	Internal System Error 1. Retry the command at 1-minute intervals for a maximum of 5 times. 2. If the test continues to abort, escalate the problem.
	PASS	This switch sent a call state auditing message to the far-end switch to verify the state of the call active on this trunk. If a call state mismatch is found, then the call will be torn down within two minutes. If no call was active, then no message was sent.

ISDN Test Call Test (#258)

This test performs a far-end loop around to a far-end switch over an ISDN trunk. The trunk's service state must be in-service, maint-NE, or out-of-service/NE, and no call can be active on the trunk. The test call can be initiated as part of a long test sequence, or as an individual test, as described below. This test is valid only for systems using country protocol 1 (including US), or when the far end has loop-around capability.

A test call connection is established to a far-end switch over the ISDN trunk to be tested. The digital port on a TN711D Maintenance/Test circuit pack generates a test-pattern bit stream which is sent to the far-end switch and echoed back. The received pattern is then compared to the sent pattern and checked for errors that indicate a loss of integrity on the communications path.

If a test call is running when scheduled maintenance starts, the green LED is turned off. To determine if a test call is still running, use the **list isdn-testcall** and **status isdn-testcall** commands. A lit yellow LED on the Maintenance/Test circuit pack also indicates that a test call is running.

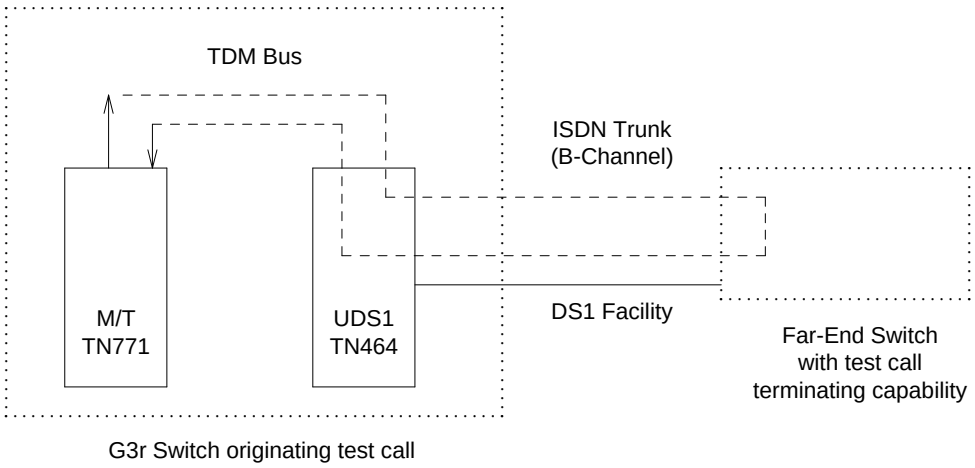

Figure 9-62. Outgoing ISDN-PRI Test Call

Synchronous Test Calls

You can initiate a synchronous outgoing test call by entering one of the following commands:

- **test trunk** group#/member# **long [repeat** #**]**
- **test board** UUCSS **long [repeat** #**]**
- **test port** UUCSSpp **long [repeat** #**]**

The above test sequences include a test-call for ISDN-PRI trunks. The duration of the test call is 8.6 seconds for If unrestricted (B8ZS) B-channels and 9.4 seconds for restricted (ZCS) B-channels. The test fails if the bit error rate retrieved from the Maintenance/Test digital port is greater than 0. When this occurs, you will need to perform further diagnostics, such as the **test isdn-testcall** command described below.

Asynchronous Test Calls

You can start, query, and stop an outgoing test call by using the following maintenance commands:

- **test isdn-testcall** group#/member# **[minutes** #**]**

  This command initiates an outgoing ISDN-PRI test call for a maximum of 120 minutes. Default times are as above. Only one trunk per port network can be tested at one time.

- **status isdn-testcall** group#/member#

  This command displays the progress of the outgoing test call by reporting bit and block error rates of the tested B-Channel.

- **clear isdn-testcall** group#/member#

  This command terminates an outgoing test call already in progress. Measurements already collected are not cleared until the next test call begins.

A PASS of the asynchronous test indicates only that the test call was successfully established. Use the **status** and **list** commands to get the results of the test.

NOTE:
Before attempting to make an ISDN-PRI test call to the public network (that is, the network is the far-end), make sure that test call service is provisioned by the network. The user must subscribe to Test Type 108 service and have the correct far-end test call number administered on the trunk group form for the call to be allowed.

Table 9-213. TEST #258 ISDN Test Call

Error Code	Test Result	Description/ Recommendation
4	ABORT	There is a problem with the Signaling Channel. 1. Consult the procedures for the ISDN-PRI Signaling Group (ISDN-SGRP). Further information may also be obtained by consulting the procedures for the ISDN-PRI Signaling Channel (ISDN-LNK).
8	ABORT	There is a problem with the DS1 interface circuit pack. 1. Consult the procedures for the appropriate DS1 interface circuit pack (DS1-BD or UDS1-BD).
1004	ABORT	B channel in use. 1. Determine if a call is active on this DS1 ISDN Trunk via the **status trunk** group#/member# command. 2. When the service state indicates in-service/idle, retry the test.
1005	ABORT	Bad Configuration (i.e., no Maintenance/Test circuit pack) 1. Make sure the Maintenance/Test Circuit Pack is inserted. 2. Repeat the test. If it aborts with this error code again, escalate the problem.
1018	ABORT	Test call is disabled. 1. Enable Maintenance on the Trunk Group form.

Continued on next page

Table 9-213. TEST #258 ISDN Test Call — *Continued*

Error Code	Test Result	Description/ Recommendation
1019	ABORT	Another Test call is in progress. 1. Issue the **list isdn-testcall** command to locate the test call. 2. Issue the **status isdn-testcall** command to find out the duration and start time of the test call. 3. Issue the **clear isdn-testcall** command to stop the test call from running. 4. If time and duration indicate that the test call should have stopped, and the **clear isdn-testcall** command does not work, refer to M/T-DIG (Maintenance/Test Digital Port) Maintenance documentation for recommended maintenance strategy.
1020	ABORT	There is a problem with the DS1 Interface Circuit Pack. 1. Refer to the appropriate Maintenance documentation (DS1-BD or UDS1-BD).
1024	ABORT	(M/T-DIG) Maintenance/Test Digital Port in use. 1. Wait until yellow and green LED s are turned off on the M/T-BD (Maintenance/Test circuit pack). 2. Retry test. If problem persists, refer to M/T-DIG (Maintenance/Test Digital Port) Maintenance documentation.
1113	ABORT	The signaling link has failed. Therefore, the system cannot send any messages on behalf of this trunk. 1. Check the results of Test #255 (Signaling Link State Check Test).
1116	ABORT	The switch could not appropriately change the ISDN service state. 1. Determine if a call is active on this DS1 ISDN Trunk (use the **status trunk** group#/member# command). If so, proceed as for Error Code 1119. 2. If not, check the Error and Alarm Logs for problems with this ISDN-TRK (DS1 ISDN Trunk) MO.

Continued on next page

Table 9-213. TEST #258 ISDN Test Call — *Continued*

Error Code	Test Result	Description/ Recommendation
1117	ABORT	ISDN Service message is already outstanding. 1. Wait 2 minutes. Then try again.
1118	ABORT	Far-end of ISDN trunk is not administered. 1. Check the administration of the far-end ISDN trunk. 2. Issue the **status trunk** group#/member# command. 3. Try the test again.
1119	ABORT	The test call was aborted due to a normal call attempt on this trunk. **NOTE:** The test call will only be performed if the trunk is idle. 1. Either wait for the normal call to terminate normally, or force it to be dropped by using the **busyout trunk** trunk group/trunk member command to busyout the DS1 ISDN Trunk. When the trunk is idle, retry the test.
1120	ABORT	The DS1 ISDN Trunk is in the ISDN out-of-service/far-end state. 1. Try to change the service state via Test #256 (Service State Audit Test) and then try this test again. Keep in mind that the trunk may be in the out-of-service/far-end state due to problems at the far-end switch. If that is the case, no remedial action can be taken at this end.
1122	ABORT	There is no test line number for the far-end switch. 1. Check the Trunk Group Administration form.
1123	ABORT	There is no Feature Access Code administration for this Facility Test. 1. Check the Dial Plan and Feature Administration forms.
2000 2012 None	ABORT	Internal System Error. 1. Retry the command at 1-minute intervals a maximum of 5 times. 2. If the test continues to abort, escalate the problem.

Continued on next page

Table 9-213. TEST #258 ISDN Test Call — *Continued*

Error Code	Test Result	Description/ Recommendation
2035	ABORT	The call has timed out, perhaps because of a lack of system resources. 1. Wait 1 minute and try again. 2. If the test continues to abort, escalate the problem.
2036 2037	ABORT	Internal System Error. 1. Follow recommendation for ABORT code 2012.
2038 2039	ABORT	A problem occurred while trying to read the test data. 1. Wait 1 minute and then try again. If the test aborts again in the same manner, there is a serious internal problem. Escalate the problem.
2040	ABORT	Internal System Error. Follow recommendations for ABORT code 2012.
2041	ABORT	The call has timed out, perhaps because of a lack of system resources. Follow recommendations for ABORT code 2035.
2066	ABORT	Could not establish test call. 1. Retry the command at 1-minute intervals a maximum of 5 times. 2. If the test continues to abort, escalate the problem.
2067	ABORT	The call has timed out, perhaps because of a lack of system resources. Follow recommendations for ABORT code 2035.
2074	ABORT	Bit and Block Error query failed. 1. Retry the command at 1-minute intervals a maximum of 5 times. 2. If the test continues to abort, there may be a serious internal problem with M/T-DIG (Maintenance/Test Digital Port). If this is the case, refer to the M/T-DIG (Maintenance/Test Digital Port) Maintenance documentation.
2075	ABORT	Internal System Error. Follow recommendations for ABORT code 2012.

Continued on next page

Table 9-213. TEST #258 ISDN Test Call — *Continued*

Error Code	Test Result	Description/ Recommendation
2100	ABORT	Could not allocate the necessary system resources to run this test. 1. Retry the command at 1-minute intervals a maximum of 5 times. 2. If the test continues to abort, escalate the problem.
2104	ABORT	Call dropped or could not be originated. 1. Make sure service is provisioned by the network. 2. Check the administration of the far-end test line extension on the trunk group administration form. 3. Check the administration of the Testcall BCC (Bearer Capability Class) on the trunk group administration form. 4. Check the reason for termination with **status isdn-testcall**. 5. For further instructions see Troubleshooting ISDN Testcalls in Chapter 6, "Additional Maintenance Procedures". 6. Try the test again. 7. If the test continues to abort, escalate the problem.
2201 2202 2203 2204 2205	ABORT	Internal System Error. Follow recommendations for ABORT code 2012.
2206	ABORT	Could not allocate the necessary system resources to run this test. Follow recommendations for ABORT code 2100.
2208	ABORT	Internal System Error. Follow recommendations for ABORT code 2012.
2209 2210	ABORT	Could not allocate the necessary system resources to run this test. Follow recommendations for ABORT code 2100.
2211	ABORT	Internal System Error. Follow recommendations for ABORT code 2012.

Continued on next page

Table 9-213. TEST #258 ISDN Test Call — *Continued*

Error Code	Test Result	Description/ Recommendation
2212	ABORT	Call terminated by unexpected disconnect. 1. Wait 1 minute and then try again.
2213	ABORT	The call has timed-out, perhaps because of a lack of system resources. Follow recommendations for ABORT code 2035.
2214	ABORT	Call terminated by unexpected disconnect. 1. Wait 1 minute and then try again.
2215 2216 2217 2218 2219	ABORT	Internal System Error. Follow recommendations for ABORT code 2012.
2220	ABORT	Call terminated prematurely. 1. Wait 1 minute and try again.
2221 2222 2223 2224 2225 2226	ABORT	Internal System Error. Follow recommendations for ABORT code 2012.
2227	ABORT	Could not allocate the necessary system resources to run this test. Follow recommendations for ABORT code 2100.

Continued on next page

Table 9-213. TEST #258 ISDN Test Call — *Continued*

Error Code	Test Result	Description/ Recommendation
2042	FAIL	Comparison of data sent to data received indicates a loss of integrity on the communications path. 1. Take the trunk out of service and check the quality of the DS1 connection, including the transmission facility and any external equipment such as DAC s, CSU s, etc. Use **test isdn-testcall** and **status isdn-testcall** commands to get the bit and block error rates.
	PASS	The test pattern was sent and received properly. If the synchronous test call was performed (long test sequence), this indicates that the communications path is operating properly. If the **test isdn-testcall** command was used, PASS indicates only that the test call was established. Use the **status isdn-testcall** command to get the bit and block error rates detected by the test. If the bit and block error rates are not acceptable, perform a complete analysis of the DS1 facility including the transmission facility and any external equipment such as DAC s, CSU s, etc.

Maintenance Object Repair Procedures JNL-PRNT

J

JNL-PRNT (Journal Printer Link)

MO Name As It Appears in Alarm Log	Alarm Level	Initial System Technician Command to Run (a)	Full Name of MO
JNL-PRNT	MINOR	test journal wakeup-log	Journal Printer Link
JNL-PRNT	WARNING	test journal wakeup-log	Journal Printer Link

The maintenance strategies for JNL-PRNT (Journal Printer Link) and PMS-PRNT (PMS Printer Link) are the same. Refer to the PMS-PRNT/JNL-PRNT section of this chapter.

Maintenance Object Repair Procedures
LOG-SVN

L

LOG-SVN (Login Security Violation)

MO Name As It Appears in Alarm Log	Alarm Level	Initial System Technician Command to Run (a)	Full Name of MO
LOG-SVN	MAJOR	enable login <login ID>	Login Security Violation

a. Where <login ID> is the AT&T services login ID for which the security violation was detected. The **Alt Name** field indicates the login ID associated with the security violation and the major alarm.

The Security Violation Notification (SVN) feature provides notification when the number of failed attempts to access the system administration/maintenance interface meets or exceeds customer administered threshold parameters.

A major alarm is logged whenever a security violation is detected involving an AT&T services login ID and that login ID has been disabled as a result of detection of the security violation. The capability to disable a login ID following detection of a security violation involving that login ID is administrable on a per login ID basis.

Refer to the *DEFINITY Communications System Generic 3 V2 Implementation*, 555-230-653, Issue 1 for information on administration required for the Security Violation Notification feature, and the option to disable a login ID following detection of a security violation involving the affected login ID.

Hardware Error Log Entries and Test to Clear Values

Security Violation Notification Error Log Entries					
Error Type	**Aux Data**	**Associated Test**	**Alarm Level**	**On/Off Board**	**Test to Clear Value**
1-15	None	None	Major	OFF	enable login <login ID>

General Information about **log-svn** error log entries:

a. The number (1 - 15), that appears in the error type field, corresponds to the location of the login in the internal login data structure.

b. The *Alt Name* field on the alarm report indicates the login ID associated with the security violation and major alarm.

c. These errors/alarms are associated with a number of failed attempts to access the system management/maintenance interface using an AT&T services login ID that meet or exceed the customer administered threshold parameters. The associated alarm is immediately raised as a major alarm.

d. The affected login ID will be disabled as a result of detection of the security violation, unless it is the last enabled INADS type login on the system. The provision to disable a login ID following detection of a security violation involving that login ID is administerable on a login ID basis.

e. The **enable login** command is used to both enable a login that has been disabled, and to retire any login security violation alarms associated with the login ID.

f. Use of the **enable login** command to enable a login and/or retire alarms must be executed using a login ID with greater service level hierarchy permissions.

g. Access to the **enable login** command is controlled through the Administer Permissions field on the Command Permission Categories form. This field (Administer Permissions) must be set to "y" to access the enable login command.

h. The *Port* alarm report field will set to the port where the final invalid login attempt, involving the alarmed login ID, was detected. Valid port values for G3i products include:

— MGR1 — Dedicated manager 1 or G3 management terminal connection

— NET-n — Network controller dial up port

— INADS — INADS port

— EPN — EPN maintenance EIA port

— EIA — Other EIA port

Valid port value for G3r products include:

— SYSAM _LOC — Local administration port

— SYSAM _RMT — Remote administration port

— SYS_PORT — System Port

— MAINT — Maintenance port

i. The *Svc State* alarm report field will be set to OUT if the login ID is in the disabled state as a result of detection of a security violation involving the login ID. Once the login ID has been enabled, the field will be set to IN.

j. The source or reason of the failed login attempts should be identified and the cause corrected prior to re-enabling a login ID and/or retiring any alarms associated with the login ID. The cause may be something as innocuous as the failure of AT&T services automatic login software, to something as insidious as a hacker attempting to gain access to the switch system management interface.

Prior to retiring an SVN alarm and enabling the associated login ID, the **monitor security-violations login** command can be used to access information about the invalid login attempts that caused the security violation. This information can be useful in determining the source of the invalid attempts and analyzing why they occurred.

The **list logins** command provides status information about logins on the system. If a login has been disabled as a result of a security violation, the status will be "*svn-disabled*."

Procedure to Retire SVN Alarm

To retire a SVN alarm:

1. Enter the command **enable login <login ID>**.

   The login ID associated with that alarm is displayed in the *Alt Name* field of the alarm report and the alarm is retired.

Maintenance Object Repair Procedures
MAINT to M/T-PKT

M

MAINT (EPN Maintenance Circuit Pack)

MO Name As It Appears in Alarm Log	Alarm Level	Initial System Technician Command to Run	Full Name of MO
MAINT	MINOR	test maintenance sh	EPN Maintenance Circuit Pack
MAINT	MAJOR	test maintenance l	EPN Maintenance Circuit Pack

The TN775B EPN Maintenance circuit pack monitors and supports environmental maintenance for EPN multicarrier or single-carrier cabinets. The EPN Maintenance circuit pack provides switch software with a mechanism to activate or deactivate Emergency Transfer in the EPN. Control by the system of Emergency Transfer can be overridden by the Emergency Transfer Switch on the faceplate of the circuit pack. The EPN Maintenance circuit pack invokes Emergency Transfer when the EPN loses contact with the PPN or when the EPN Maintenance circuit pack loses contact with all Expansion Interface circuit packs. The EPN Maintenance circuit pack handles loss of AC power in the EPN multicarrier cabinet by supplying battery power for 15 seconds to the EPN cabinet and then an additional 10 minutes of power to just the control carrier in the EPN. When power fails in a single-carrier EPN cabinet, no such power holdover is available. In the event that an Expansion Interface circuit pack goes insane and is reset six times within 15 minutes, the EPN Maintenance circuit pack will hold the Expansion Links reset preventing the Expansion Interface circuit pack from running.

The EPN Maintenance circuit pack has alarm LED s which indicate the presence of Major, Minor, and Warning alarms. A flashing LED indicates the presence of an alarm within the cabinet. A continuously lit LED indicates the presence of an alarm elsewhere in the system.

A management terminal (G3-MT) can be directly connected to the TN775B EPN Maintenance circuit pack. This link operates at 9600 baud, but system software throttles the rate of data flow to the TN775B for display on the G3-MT to about 1200 baud. All system commands can be executed via the EPN G3-MT login. However, due to the slow speed at which the EPN login operates, it is recommended that it be used only for maintenance sessions and not for system administration.

The PPN communicates with the EPN Maintenance circuit pack via the following path; uplink messages from the EPN Maintenance circuit pack to the PPN take exactly the reverse path. Messages flow from the UN331B Processor circuit pack in the SPE to the TN1655 Packet Interface circuit pack, over the Lan Bus to the Active PPN Expansion Interface circuit pack, across the fiber link to the Active EPN Expansion Interface circuit pack, and over a serial link to the EPN Maintenance circuit pack. Figure 9-63 below illustrates this path in a system with a Center Stage Switch and duplicated PNC.

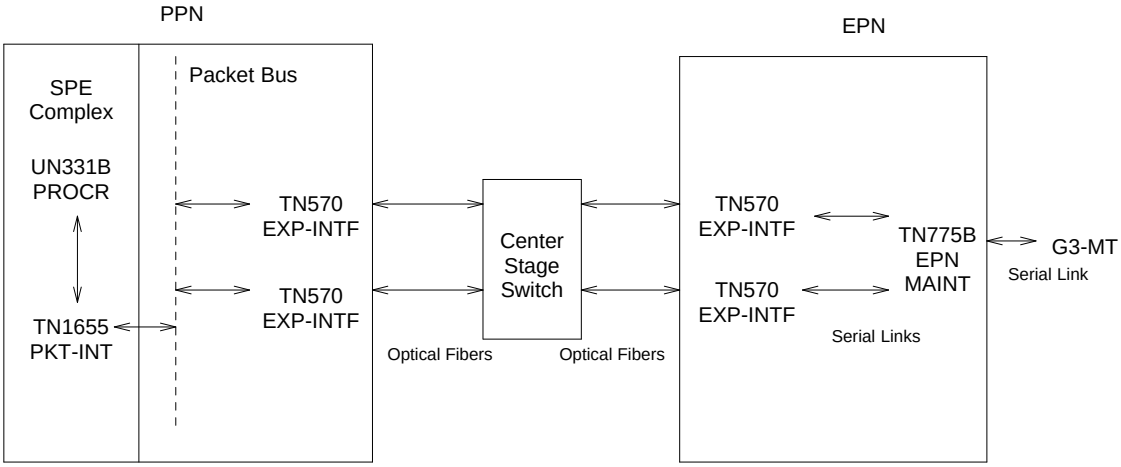

Figure 9-63. EPN Maintenance Circuit Pack Message Flow

The EPN Maintenance circuit pack must be physically inserted into the dedicated slot marked Maintenance in the A carrier of the EPN. The serial links from the EPN Maintenance circuit pack to the Expansion Interface circuit packs

are physically connected from this dedicated slot to slots 2A01 and 2B02 (2B02 is used only if there is duplicated Port Network Connectivity). The serial link from slot 2A01 to the maintenance slot is hard-wired into the backplane of carrier A, whereas the serial link from slot 2B02 to the maintenance slot is a ribbon cable connecting the two slots. The serial link from the EPN Maintenance circuit pack to the terminal is also a ribbon cable which plugs into a connector labeled TERM on the back of carrier A.

The maintenance strategy for the EPN Maintenance circuit pack consists of checking the integrity of the communications path to/from the EPN Maintenance circuit pack, testing individual hardware components on the EPN Maintenance circuit pack, and keeping the alarm LED s up-to-date. The individual hardware components include the serial interfaces which handle the serial links connected to the EPN Maintenance circuit pack. There are three serial interfaces, one for each possible Expansion Interface circuit pack and one for the terminal.

Since the EPN Maintenance circuit pack supports environmental maintenance in the EPN, trouble with the EPN Maintenance circuit pack can cause environmental maintenance to falsely detect problems. In a multicarrier cabinet EPN, these environmental MOs include: POWER (Battery & Battery Charger), CARR-POW (Carrier Port Power Unit), AC-POWER (AC Power), CABINET (Cabinet Sensors), EMG-XFER (Emergency Transfer), EXT-DEV (External Device Alarm), and CUST-ALM (Customer-Provided Alarming Device). In a single carrier cabinet EPN, these environmental MOs include DC-POWER (Single Carrier Cabinet Power), EMG-XFER (Emergency Transfer), EXT-DEV (External Device Alarm), and CUST-ALM (Customer-Provided Alarming Device).

Hardware Error Log Entries and Test to Clear Values

EPN Maintenance Circuit Pack Error Log Entries					
Error Type	**Aux Data**	**Associated Test**	**Alarm Level**	**On/Off Board**	**Test to Clear Value**
0*	0	Any	Any	Any	test maintenance sh r 1
1(a)	0 1	EPN Maintenance Circuit Pack Reset Test (#306)	MINOR	ON	test maintenance l
513(a)	0 1	MGR I Channel Loop Test (#228)	MINOR	ON	test maintenance sh r 3
769(b)	Any	Sanity Handshake Test (#106)			
1537(a)	0 1	Sanity Maze Test (#303)	MINOR	ON	test maintenance sh r 3
2561(a)	0 1	Sanity Handshake Test (#106)	MINOR	ON	test maintenance sh r 3
2817(a)	0(b) 1	Serial Channel Loop Test (#229)	MINOR	ON	test maintenance sh r 3
3329(c)	Any	Serial Link Test (#337)	MINOR/ WARNING**	OFF	test maintenance sh r 3
3585(d)	Any	Serial Link Test (#337)	MINOR/ WARNING**	OFF	test maintenance sh r 3

* Run the Short Test Sequence first. If all tests pass, run the Long Test Sequence. Refer to the appropriate test description and follow the recommended procedures.

** Major and Minor alarms on this MO may be downgraded to Warning alarms based on the value used in the **set options** command.

Notes:

a. A value of 0 indicates that PNC-A (and therefore, the Expansion Interface circuit pack located on PNC-A) was active when this error occurred. A value of 1 indicates that PNC-B (and therefore, the Expansion Interface circuit pack located on PNC-B) was active when this error occurred. To clear this problem, make sure the Active PNC is the same as that indicated by the Aux Value.

b. Multiple values can appear in the Aux Data field. There will be other errors in the log if there is a real problem. Use these other errors to troubleshoot the problem.

c. The serial link between the Expansion Interface circuit pack in the A carrier and the EPN Maintenance circuit pack is defective.

d. The serial link between the Expansion Interface circuit pack in the B carrier and the EPN Maintenance circuit pack is defective.

System Technician-Demanded Tests: Descriptions and Error Codes

Always investigate tests in the order presented in the table below when inspecting errors in the system. By clearing error codes associated with the *Sanity Handshake Test,* for example, you may also clear errors generated from other tests in the testing sequence.

Order of Investigation	Short Test Sequence	Long Test Sequence	D/ND*
Sanity Handshake Test (#106)	X	X	ND
EPN Maintenance Circuit Pack Reset Test (#306)		X	D
Serial Channel Local Loop Around Test (#229)	X	X	ND
MGR I Channel Local Loop Around Test (#228)		X	D
EPN Maintenance Circuit Pack Sanity Maze Test (#303)	X	X	ND
EPN Maintenance Circuit Pack Serial Link Test (#337)	X	X	ND
EPN Maintenance Circuit Pack Refresh Test (#854)†			

* D = Destructive, ND = Non-destructive

† The EPN Maintenance Circuit Pack Refresh Test (#854) runs only in G3r V1 software loads preceding 6.0.

Sanity Handshake Test (#106)

This test checks the EPN Maintenance circuit pack's ability to respond to queries. A message is sent to the EPN Maintenance circuit pack which then sends a message back. If the response message is received, then the EPN Maintenance circuit pack is queried for the EPN cabinet type (valid EPN cabinet types are single carrier and multicarrier cabinets). The EPN Maintenance circuit pack reads pins on the backplane of carrier A that identify the type of cabinet and report this information. If a valid cabinet type is returned, then the test passes.

Table 9-214. TEST #106 Sanity Handshake Test

Error Code	Test Result	Description/ Recommendation
	ABORT	Internal System Error.
1000	ABORT	System resources required to run this test are not available.
2000	ABORT	Response to cabinet query was not received within the allowable time period.
2033	ABORT	Internal System Error. 1. Retry the command at one-minute intervals a maximum of five times. 2. If the test continues to abort, escalate the problem.
2046	ABORT	The EPN Maintenance circuit pack reported an invalid cabinet type. Not knowing the cabinet type of the EPN will prevent all EPN environment maintenance from running. 1. Retry the command. 2. If the test continues to abort with 2046, then either the EPN Maintenance circuit pack is defective, or the EPN cabinet wiring is defective. First, replace the EPN Maintenance circuit pack. 3. If the test continues to abort with 2046, then the EPN cabinet wiring is defective in the A carrier and the EPN Maintenance circuit pack cannot read the backplane pins to determine the cabinet type.
10601	ABORT	Test disabled via software patch. 1. Escalate to next tier level.

Continued on next page

Table 9-214. TEST #106 Sanity Handshake Test — *Continued*

Error Code	Test Result	Description/ Recommendation
	FAIL	EPN Maintenance circuit pack did not respond to Sanity Handshake and the test timed out. 1. Verify that the carrier A power units are good. If the -5 volt unit is defective in the A carrier, then communication with the EPN Maintenance circuit pack will not be possible. 2. If the -5 volt unit is good and this test continuously fails, background maintenance will automatically escalate to an EPN Maintenance circuit pack Reset (Test #306). Otherwise, you can manually invoke an EPN Maintenance circuit pack Reset by issuing the **test maintenance long** command and evaluating any generated error codes from Test #306. If Test #306 passes, this test should also PASS. Otherwise, use the following steps to determine if the EPN Maintenance circuit pack, or the serial link to the EPN Maintenance circuit pack, is defective: Duplicated Port Network Connectivity: 1. Switch Port Network Connectivity by entering **reset pnc interchange**. 2. Run the Short Test Sequence against the EPN Maintenance circuit pack. If Test #106 still fails, replace the EPN Maintenance circuit pack and retest. Otherwise, follow the error routines for any errors that are logged by this Short Test. Simplex Port Network Connectivity: 1. Replace the EPN Maintenance circuit pack and invoke the Short Test Sequence against it. 2. If error persists, replace the EPN Expansion Interface circuit pack, **at a time when the EPN can go down with minimal inconvenience**. 3. If the error still persists, the problem is with the actual serial link in A carrier backplane and not with the EPN Maintenance circuit pack.

Continued on next page

Table 9-214. TEST #106 Sanity Handshake Test — *Continued*

Error Code	Test Result	Description/ Recommendation
	PASS	The communications path to and from the EPN Maintenance circuit pack is sane, and the EPN Maintenance circuit pack can read and report the correct EPN cabinet type. The EPN Maintenance circuit pack may still have problems related to Tests #228, #229, #303, or #306.

Management Terminal Channel Local Loop-Around Test (#228)

This test is destructive.

This test checks TN775B on-board circuitry associated with the serial link for the management terminal connection. This test will not cause the local terminal login to drop, but any data displayed on the terminal while the test is running will be lost.

The EPN Maintenance circuit pack has 3 separate serial interfaces:

- One to the management terminal which is tested by Test #228
- One to the active Expansion Interface circuit pack which is tested by Test #229
- One to the standby Expansion Interface circuit pack which is tested by Test #229

Table 9-215. TEST #228 Management Terminal Channel Local Loop-Around Test

Error Code	Test Result	Description/ Recommendation
1000	ABORT	System resources required to run this test are not available.
2000	ABORT	Response to the test request was not received within the allowable time period.
2033	ABORT	Internal System Error. 1. Retry the command at one-minute intervals a maximum of 5 times. 2. If the test continues to abort, escalate the problem.
2034	ABORT	Background EPN Maintenance circuit pack maintenance is running the MGR I Channel Local Loop Around Test. 1. Wait 30 seconds and retry the test a maximum of 5 times. 2. If the test continues to abort, escalate.
22801	ABORT	Test disabled via software patch. 1. Escalate to next tier level.

Continued on next page

Table 9-215. TEST #228 Management Terminal Channel Local Loop-Around Test — *Continued*

Error Code	Test Result	Description/ Recommendation
	FAIL	Test failed which means the EPN G3-MT terminal is not usable. 1. Run the test three more times. Replace the EPN Maintenance circuit pack if the test continues to fail.
	PASS	The serial interface circuitry on the EPN Maintenance circuit pack which controls the EPN-connected terminal is functioning properly. If there are still troubles with the EPN G3-MT terminal, the problem may be one of the following: 1. The EPN-connected terminal is not configured properly. The connection between the terminal and the EPN Maintenance circuit pack must be set up at 9600 baud. 2. The serial link from the back of carrier A to the EPN G3-MT terminal may be defective. The serial link consists of the connector on the back of carrier A labeled TERM and the ribbon cable running to the terminal. 3. The terminal may be defective. Try another terminal. 4. Since this test is not 100 percent accurate, there may still be problems with the EPN Maintenance circuit pack.

Serial Channel Local Loop Around Test (#229)

This test checks TN775B on-board circuitry associated with the serial links to the Expansion Interface circuit packs. A request is sent to the EPN Maintenance circuit pack over the Active link via the Active Expansion Interface circuit pack serial interface circuitry to test the serial interface circuitry of the standby Expansion Interface circuit pack link. If a response is received, then by definition the serial interface circuitry associated with the Active link is good.

The EPN Maintenance circuit pack has 3 separate serial interfaces:

- One to the management terminal which is tested by Test #228
- One to the active Expansion Interface circuit pack which is tested by Test #229
- One to the standby Expansion Interface circuit pack which is tested by Test #229

Table 9-216. TEST #229 Serial Channel Local Loop Around Test

Error Code	Test Result	Description/ Recommendation
1000	ABORT	System resources required to run this test are not available.
2000	ABORT	Response to the test request was not received within the allowable time period.
2033	ABORT	Internal System Error. 1. Retry the command at one-minute intervals a maximum of 5 times. 2. If the test continues to abort, escalate the problem.
2034	ABORT	Background EPN Maintenance circuit pack maintenance is running the Serial Channel Local Loop Around Test. 1. Wait 30 seconds, and retry the test a maximum of 5 times. 2. If the test continues to abort, escalate the problem.
22901	ABORT	Test disabled via software patch. 1) Escalate to the next tier level.

Continued on next page

Table 9-216. TEST #229 Serial Channel Local Loop Around Test — *Continued*

Error Code	Test Result	Description/ Recommendation
	FAIL	The on-board circuitry associated with the Standby serial link is defective. Since the EPN Maintenance circuit pack reported this failure, the on-board circuitry associated with the Active serial link is functional. 1. This test checks the circuitry on the EPN Maintenance circuit pack associated with the Standby Expansion Interface link. a. In a switch without duplicated Port Network Connectivity, current service will not be affected because the circuitry failing is not being used. Nevertheless, a Minor alarm will remain in the Alarm Log against MAINT. Therefore, the EPN Maintenance circuit pack must be replaced. b. In a switch with duplicated Port Network Connectivity, service will not be affected as long as you DO NOT INTERCHANGE THE PNCS; otherwise, the connection to the EPN Maintenance circuit pack will be lost. Losing the EPN Maintenance circuit pack connection will mean loss of the connection to the terminal and EPN Environment maintenance. The EPN Maintenance circuit pack must be replaced to correct this problem.

Continued on next page

Table 9-216. TEST #229 Serial Channel Local Loop Around Test — *Continued*

Error Code	Test Result	Description/ Recommendation
	PASS	The on-board circuitry associated with both Expansion Interface circuit pack serial links is good. If there is still a problem communicating with the EPN Maintenance circuit pack, check the following: 1. The cable comprising the serial link (B carrier Expansion Interface circuit pack to EPN Maintenance circuit pack only) may be defective. 2. The EPN Maintenance circuit pack may actually be defective. **NOTE:** This test may not be 100 percent accurate. 3. The Expansion Interface circuit pack on the Standby link may be defective.

EPN Maintenance Circuit Pack Sanity Maze Test (#303)

The EPN Maintenance circuit pack processor has direct access to special registers in the EPN Maintenance circuit pack. These registers are tied to such things as the Expansion Interface circuit pack reset leads and Carrier Port Power Unit reset leads (which enable the EPN Maintenance circuit pack to recycle carriers). To prevent an insane EPN Maintenance circuit pack from inadvertently controlling these external devices, a special interface called the Sanity Maze is provided that must first be navigated by the EPN Maintenance circuit pack processor prior to any register access. There are two parts to the test. Part 1 involves navigating the Sanity Maze to toggle an unused lead. Part 2 attempts to toggle an unused lead without first navigating the Sanity Maze. The Sanity Maze test passes if Part 1 is successful and Part 2 fails.

Table 9-217. TEST #303 EPN Maintenance Circuit Pack Sanity Maze Test

Error Code	Test Result	Description/ Recommendation
1000	ABORT	System resources required to run this test are not available.
2000	ABORT	Response to the test request was not received within the allowable time period.
2033	ABORT	1. Retry the command at one-minute intervals a maximum of 5 times. 2. If the test continues to abort, escalate the problem.
	FAIL	The Sanity Maze of the EPN Maintenance circuit pack is defective. 1. Replace the EPN Maintenance circuit pack.
	PASS	The Sanity Maze is working properly, and the EPN Maintenance circuit pack can access the unused register. If **recycle carrier** commands (for EPN carriers) do not work, the following problems may still exist: 1. The Carrier Port Power Unit or wiring to the Carrier Port Power Unit may be defective. Refer to CARR-POW (Carrier Port Power Unit) Maintenance documentation. 2. Since this test only tests the EPN, there is a very small probability that the EPN Maintenance circuit pack cannot access those registers that deal with EPN devices. The EPN Maintenance circuit pack may need to be replaced.

EPN Maintenance Circuit Pack Reset Test (#306)

This test is destructive.

The terminal connection will be dropped and, if the Emergency Transfer switch is in the AUTO position, Emergency Transfer will be disabled for the duration of the test.

The EPN Maintenance circuit pack is reset by the Active Expansion Interface circuit pack. After the Expansion Interface circuit pack reports that the EPN Maintenance circuit pack has reset, a handshake message is sent to the EPN Maintenance circuit pack. If the EPN Maintenance circuit pack responds to the handshake, the test passes. If not, it fails. If the test passes, the EPN-connected terminal is brought back up, and Emergency Transfer is restored to its previous state.

Table 9-218. TEST #306 EPN Maintenance Circuit Pack Reset Test

Error Code	Test Result	Description/ Recommendation
1000	ABORT	System resources required to run this test are not available. 1. Retry the command at one-minute intervals a maximum of 5 times. 2. If the test continues to abort, escalate the problem.
1018	ABORT	Test disabled via software patch. Escalate to next tier level.
2029	ABORT	Internal System Error. 1. Retry the command at one-minute intervals a maximum of 5 times. 2. If the test continues to abort, escalate the problem.
2500	ABORT	Internal System Error. 1. Retry the command at one-minute intervals a maximum of 5 times. 2. If the test continues to abort, escalate the problem.

Continued on next page

Table 9-218. TEST #306 EPN Maintenance Circuit Pack Reset Test — *Continued*

Error Code	Test Result	Description/ Recommendation
1204	FAIL	
1205		Expansion Interface circuit pack could not reset the EPN Maintenance circuit pack. For duplicated Port Network Connectivity: 1. The Standby Expansion Interface circuit pack may be defective and, thereby, preventing the Active Expansion Interface circuit pack from resetting the EPN Maintenance circuit pack. Unplug the Standby Expansion Interface circuit pack, and attempt to reset the EPN Maintenance circuit pack using the **test maint long** command. If Test #306 passes, replace the Standby Expansion Interface circuit pack, and attempt the reset test again. If Test #306 fails, then replace the Standby EPN Expansion Interface circuit pack. 2. The Active Expansion Interface circuit pack may be defective and unable to reset the EPN Maintenance circuit pack. Interchange the PNC by entering the **reset pnc interchange** command. Now reset the EPN Maintenance circuit pack again by using the **test maintenance long** command. If the test passes, the problem is with the known Standby Expansion Interface circuit pack. Repeat Step 2 to determine if the Standby Expansion Interface circuit pack should be replaced.

Continued on next page

Table 9-218. TEST #306 EPN Maintenance Circuit Pack Reset Test — *Continued*

Error Code	Test Result	Description/ Recommendation
1205 *(cont'd.)*		3. Replace the EPN Maintenance circuit pack, and run the test again. If the test passes, the problem is with the EPN Maintenance circuit pack. Interchange the PNC by entering the **reset pnc interchange** command and run the test again. The test should pass with both Expansion Interface circuit packs being active. 4. If the B carrier Expansion Interface circuit pack is active, the ribbon cable connecting the Expansion Interface circuit pack and the EPN Maintenance circuit pack may be defective. Check the ribbon cable to make sure it is connected properly and is not damaged. For simplex Port Network Connectivity: 1. Replace the EPN Maintenance circuit pack, and run the test again. If it passes, the problem is with the EPN Maintenance circuit pack. 2. If the test fails, replace the Expansion Interface circuit pack. If the tests passes, the problem is with the Expansion Interface circuit pack. 3. If the test still fails, the problem is with the serial link wired into the backplane of carrier A.

Continued on next page

Table 9-218. TEST #306 EPN Maintenance Circuit Pack Reset Test — *Continued*

Error Code	Test Result	Description/ Recommendation
2005	FAIL	EPN Maintenance Circuit Pack Reset passed, but the EPN Maintenance circuit pack did not respond to subsequent handshake message. Retry this command three more times. If it continues to fail, the EPN Maintenance circuit pack, the Active Expansion Interface circuit pack, or the serial link is defective. To determine which is defective, follow the appropriate procedures that follow. Duplicated Port Network Connectivity: 1. Interchange PNCs by entering **reset pnc interchange**. 2. Run the Short Test Sequence against the EPN Maintenance circuit pack. If Test #306 still fails, replace the EPN Maintenance circuit pack and retest. Otherwise, follow the error routines for any errors that are logged by this Short Test Sequence. Simplex Port Network Connectivity: 1. Replace the EPN Maintenance circuit pack and invoke the Short Test Sequence against it. 2. If the error persists, replace the Expansion Interface circuit pack, **at a time when the EPN can go down with minimal inconvenience**. 3. If the error still persists, the problem is with the actual serial link in A carrier backplane and not with the EPN Maintenance circuit pack.
	PASS	The Active Expansion Interface circuit pack can reset the EPN Maintenance circuit pack. This implies the EPN Maintenance circuit pack, the Active Expansion Interface circuit pack, and Active serial link are sane. There could still be a problem with the Standby Expansion Interface circuit pack and Standby serial link in a Duplication Option system.

EPN Maintenance Circuit Pack Serial Link Test (#337)

This test is destructive.

This test checks the serial link from the Standby Expansion Interface circuit pack to the EPN Maintenance circuit pack. If there is no Standby link, or the Standby link is down at the time of the test, this test will abort.

NOTE:
The status of the link is changed to "down" when the Standby Expansion Interface circuit pack begins initialization tests (for example, after being reset). The link status is then updated at the conclusion of these tests.

Table 9-219. TEST #337 EPN Maintenance Circuit Pack Serial Link Test

Error Code	Test Result	Description/ Recommendation
1000	ABORT	System resources required to run this test are not available. 1. Retry the command at one-minute intervals a maximum of 5 times. 2. If the test continues to abort, escalate the problem.
2029 2500	ABORT	Internal System Error. 1. Retry the command at one-minute intervals a maximum of 5 times. 2. If the test continues to abort, escalate the problem.

Continued on next page

Table 9-219. TEST #337 EPN Maintenance Circuit Pack Serial Link Test — *Continued*

Error Code	Test Result	Description/ Recommendation
	FAIL	The Serial Link between the currently standby Expansion Interface circuit pack and the EPN Maintenance circuit pack is defective. If the Standby EXP-INTF is on the A carrier, then error type 3329 is logged. If the Standby EXP-INTF is on the B carrier, then error type 3585 is logged. 1. *If error type 3585 was logged*, check to see if the ICCA/ICCB cables between carriers A and B are present and properly connected (ICCA to ICCA, and ICCB to ICCB). The location of these connectors is shown in the figures for Expansion Control Carrier and Port Carrier in Chapter 2, "Hardware Configurations". Install or reconnect the cables if necessary and rerun the test. 2. Replace the EPN Maintenance circuit pack. 3. Rerun the test. If the test continues to fail, replace the Standby EPN Expansion Interface circuit pack. 4. Rerun the test. If the test continues to fail and the Standby link is on the B carrier, then replace the ribbon cable that carries the serial link from Expansion Interface circuit pack B to the EPN Maintenance circuit pack. 5. Rerun the test. If the test continues to fail, escalate the problem.
	PASS	The serial link from the Standby Expansion Links to the EPN Maintenance circuit pack is working.

EPN Maintenance Circuit Pack Refresh Test (#854)

This test checks that the processor can communicate with the EPN Maintenance Circuit pack by running a handshake test. It then refreshes the states of the LED s on the circuit pack. The EPN Maintenance Circuit Pack Refresh Test runs only in G3r V1 software loads preceding 6.0.

Table 9-220. TEST #854 EPN Maintenance Circuit Pack Refresh Test

Error Code	Test Result	Description/ Recommendation
1000	ABORT	System resources required to run this test are not available.
2033	ABORT	Internal System Error. 1. Retry the command at one-minute intervals a maximum of 5 times. 2. If the test continues to abort, escalate the problem.

Continued on next page

Table 9-220. TEST #854 EPN Maintenance Circuit Pack Refresh Test — *Continued*

Error Code	Test Result	Description/ Recommendation
2005	FAIL	EPN Maintenance circuit pack did not respond to Sanity Handshake and the test timed out. 1. Verify that the carrier A power units are good. If the -5 volt unit is defective in the A carrier, then communication with the EPN Maintenance circuit pack will not be possible. 2. If the -5 volt unit is good and this test continuously fails, background maintenance will automatically escalate to an EPN Maintenance circuit pack Reset (Test #306). Otherwise, you can manually invoke an EPN Maintenance circuit pack Reset by issuing the **test maintenance long** command and evaluating any generated error codes from Test #306. If Test #306 passes, this test should also PASS. Otherwise, use the following steps to determine if the EPN Maintenance circuit pack, or the serial link to the EPN Maintenance circuit pack, is defective: Duplicated Port Network Connectivity: 1. Switch Port Network Connectivity by entering **reset pnc interchange**. 2. Run the Short Test Sequence against the EPN Maintenance circuit pack. If Test #106 still fails, replace the EPN Maintenance circuit pack and retest. Otherwise, follow the error routines for any errors that are logged by this Short Test.

Continued on next page

Table 9-220. TEST #854 EPN Maintenance Circuit Pack Refresh Test — *Continued*

Error Code	Test Result	Description/ Recommendation
2005 *(cont'd.)*	FAIL	Simplex Port Network Connectivity: 1. Replace the EPN Maintenance circuit pack and invoke the Short Test Sequence against it. 2. If error persists, replace the EPN Expansion Interface circuit pack, **at a time when the EPN can go down with minimal inconvenience**. 3. If the error still persists, the problem is with the actual serial link in A carrier backplane and not with the EPN Maintenance circuit pack.
	FAIL	Internal System Error. 1. Retry the command at one-minute intervals a maximum of 5 times. 2. If the test continues to abort, escalate the problem.
	PASS	The sanity handshake to the EPN Maintenance circuit pack was successful.

MEM-BD (32MB Memory Circuit Pack)

MO Name As It Appears in Alarm Log	Alarm Level	Initial System Technician Command to Run (a)	Full Name of MO
MEM-BD	MAJOR(b)	test memory UUCS l	32M Memory Circuit Pack
MEM-BD	MINOR	test memory UUCS s	32M Memory Circuit Pack
MEM-BD	WARNING		32M Memory Circuit Pack

a. UU is the cabinet number (always 1, not required). With simplex SPE, carrier designation is not required. With duplicated SPEs, carrier a or b must be specified. *S* is the number of the circuit pack slot (1 to 4 for Memory slots). If the slot number is *not* specified, all Memory circuit packs in the specified carrier will be tested.

b. After a spontaneous SPE interchange has occurred, the Alarm Log retains for three hours a record of any MAJOR ON-BOARD alarm against an SPE component that took place before the interchange. If a spontaneous interchange has occurred (as indicated by STBY-SPE error type 103 or the **display initcauses** screen), and handshake is down, (check with **status spe**), replace the alarmed circuit pack on the standby SPE. If handshake is up, execute a **test long clear** of the alarmed circuit pack and follow recommended procedures.

The Memory circuit packs contain the system software which is executed after it is loaded from tape or disk. The Processor and the Memory circuit packs form the most critical component for all system operation.

The Processor must be able to access the Memory for all system activity or the system will go into SPE-down mode. In SPE-down mode, fatal Memory errors may show up as Processor circuit pack errors.

Each Memory circuit pack has 32 Mbytes of capacity. The SPE carrier(s) contain four dedicated slots for Memory circuit packs. Depending on its size, the system uses from two to four of these slots. Memory circuit packs must reside in contiguous slots, starting Memory slot one.

Each Memory circuit pack contains its own error detection and correction (EDC) circuit, parity checker and burst read function.

The EDC circuit operates by checking the contents of memory both as memory locations are accessed by the Processor and periodically by a built-in "scrubbing" function. The scrubbing function checks for errors through the entire Memory circuit pack every 111 seconds. It flags and corrects single-bit errors automatically and flags (but does not correct) multiple bit errors. If the EDC

circuit fails, the Memory circuit pack will not be able to detect and correct single bit errors or detect and flag multiple bit errors. If a single or multiple bit error occurs, the system may not continue to operate correctly.

The Memory parity checker detects bad parity over the Processor Bus when any Bus Master writes memory. It also generates parity (for checking by the Processor) on Memory reads. If the parity checking logic fails, it will either generate errors when it shouldn't (a serious error condition that will probable result in SPE Down) or miss errors when present (less serious).

The burst read circuit supports a special, block read mode used by the Processor to quickly load program instructions into the Processor cache. Given a single starting address over the Processor Bus, the Memory transfers four words of data back to the Processor. This reduces the time it takes for the Processor to get instructions. Problems in this circuit may be due to the Memory circuit pack or Processor and will result in SPE Down.

If the PBX system is equipped with High Reliability or Critical Reliability option (i.e. with duplicated SPEs), and if a failure of the active Memory circuit pack causes a MAJOR on-board alarm, a SPE interchange will occur if the health of the standby SPE permits the interchange.

Hardware Error Log Entries and Test to Clear Values

MEM-BD Error Log Entries					
Error Type	**Aux Data**	**Associated Test**	**Alarm Level**	**On/Off Board**	**Test to Clear Value**
0*	0	Any	Any	Any	test memory UUCS sh r 1
1		Memory RAM Checksum Test (#903)	MAJOR	OFF	test memory UUCS l r 1
3(a)		Memory RAM Checksum Test (#903)	MAJOR†	OFF	test memory UUCS l r 1
101(b)		none	WARNING	OFF	
150(c)		none	MAJOR†	ON	test memory UUCS l c
257		Memory Parity Checker Test (#906)	MINOR	ON	test memory UUCS sh r 2
513	Any(d)	Memory Single Bit Errors (#902)	MINOR	ON	test memory UUCS l r 10
769		Memory Multiple Bit Errors (#902)	MAJOR†	ON	test memory UUCS l r 2
1025		Memory Error Detection/Correction Test (#907)	MINOR	ON	test memory UUCS sh r 1
1281		Memory Burst Read Test (#908)	MAJOR†	ON	test memory UUCS sh r 1

* Run the Short Test Sequence first. If all tests pass, run the Long Test Sequence. Refer to the appropriate test description and follow the recommended procedures.

† If a spontaneous interchange has occurred (as indicated by STBY-SPE error type 103 or the **display initcauses** screen), and handshake is down, (check with **status spe**), replace the alarmed circuit pack on the standby SPE. If handshake is up, execute a **test long clear** of the alarmed circuit pack and follow recommended procedures.

Notes:

a. This error (3) indicates that a software patch has been applied and either the software patch is bad or was installed incorrectly.

   1. Back out the software patch and run the **test memory UUCS long** command to verify that the problem has been cleared.

2. If the PBX system is equipped with High Reliability or Critical Reliability option (i.e. with duplicated SPEs), and this error occurs, a SPE interchange will occur if the health of the standby SPE permits the interchange.

b. This error (101) indicates that this Memory circuit pack is not required.

1. Remove the extra Memory circuit pack at the earliest convenience to resolve this alarm. To replace the Memory circuit pack, use the procedure described in *Replacing SPE Circuit Packs* in Chapter 5, "Responding to Alarms and Errors".

c. This error (150) indicates that a SPE interchange has occurred and that the Memory circuit pack was the cause of the spontaneous interchange.

1. If other MEM-BD errors are present, investigate these errors.

2. If no other MEM-BD errors are present, run the **test memory UUCS long clear** command and investigate any test failure. If all the tests pass, follow normal escalation procedures.

d. The aux data indicates the number of single bit errors detected since the last time the test was run.

System Technician-Demanded Tests: Descriptions and Error Codes

Always investigate tests in the order presented in the table below when inspecting errors in the system. By clearing error codes associated with the *Memory Single/Multiple Bit Error Audit*, for example, you may also clear errors generated from other tests in the testing sequence.

Order of Investigation	Short Test Sequence	Long Test Sequence	Reset Board Sequence	D/ND*
Single/Multiple Bit Error Audit (#902)		X		ND
Memory Burst Read Test (#908)	X	X		ND
Memory Error Detection/Correction Test (#907)	X	X		ND
Memory RAM Checksum Test (#903)		X		ND
Memory Parity Checker Test (#906)	X	X		ND

* D = Destructive; ND = Nondestructive

Memory Single/Multiple Bit Error Audit (#902)

This audit waits for the hardware scrubbing circuits in the Memory circuit packs to make a complete pass through Memory and reports any single or multiple bit errors that may have been found. If the **test memory a|b long** command is used, this test executes once for each equipped Memory circuit pack

Table 9-221. TEST #902 Memory Single/Multiple Bit Error Audit

Error Code	Test Result	Description/ Recommendation
100	ABORT	The requested test did not complete within the allowable time period. 1. Retry the command. 2. If the test continues to abort, follow normal escalation procedures.
1022 1335 2500	ABORT	Internal System Error. 1. Retry the command. 2. If the test continues to abort, follow normal escalation procedures.
1338	ABORT	The test is not allowed to run since a planned SPE interchange is in progress. This may be caused by a planned interchange initiated automatically during 24 hour scheduled testing. 1. Wait 3 minutes and retry the command. 2. If the test continues to abort, follow normal escalation procedures.

Continued on next page

Table 9-221. TEST #902 Memory Single/Multiple Bit Error Audit — *Continued*

Error Code	Test Result	Description/ Recommendation
1339	ABORT	The test could not run on the standby Memory circuit pack in the standby SPE carrier because the standby SPE is unavailable. 1. Refer to the section on STBY-SPE Maintenance procedures for information on why a standby SPE may be unavailable and what repair actions should be taken. The **status spe** screen should indicate that handshake is down. This may be caused by a variety of reasons such as the SPE-SELECT switches on the DUPINT circuit packs being set to the position of the active SPE, a failure of the DUPINT circuit pack, or loss of power on the standby SPE. The *SPE Selected field* on the **status spe-standby** screen will display *spe a* or *spe b* if both SPE-SELECT switches are in the a or b positions, respectively.
2000	ABORT	Response to the test request was not received within the allowable time period. If the system is equipped with the High Reliability or Critical Reliability Configuration and if the Memory circuit pack is on the standby SPE, this abort code may indicate that the standby SPE is not responding to the handshake message. If this is the case, the standby SPE maintenance software may take up to two minutes to indicate that handshake communication with the standby SPE is down. The ABORT code will then change to 1339 (handshake communication down). 1. Retry the command at 1 minute intervals, a maximum of 3 times. 2. If the test continues to abort with this abort code, follow normal escalation procedures.
2315	ABORT	The test was not run, because this is an extra Memory circuit pack. No testing is allowed for extra Memory circuit packs.

Continued on next page

Table 9-221. TEST #902 Memory Single/Multiple Bit Error Audit — *Continued*

Error Code	Test Result	Description/ Recommendation
2334	ABORT	The hardware mailbox on the standby Duplication Interface board is not ready to receive messages. 1. Retry the command at 1 minute intervals, a maximum of 5 times. 2. If the test continues to abort with this abort code, follow normal escalation procedures.
	FAIL	The audit detected one or more single or multiple bit errors on the indicated Memory circuit pack(s). 1. Retry the command. 2. If the test continues to fail, replace the affected Memory circuit pack. 3. If the test continues to fail after replacing the Memory circuit pack, replace the Processor circuit pack. 4. If the test continues to fail after replacing the Memory and Processor circuit packs, follow normal escalation procedures. To replace the circuit packs, use the procedure described in *Replacing SPE Circuit Packs* in Chapter 5, "Responding to Alarms and Errors".
	PASS	The Memory does not contain any single or multiple bit errors.

Memory RAM Checksum Test (#903)

This test computes the checksum of the system software text module. This test is only run when the Memory circuit pack in slot one is being tested. If this test fails, the RAM is corrupt. It does NOT indicate a hardware problem.

Do NOT REPLACE the Memory circuit pack when this is the only error or failing test.

For systems equipped with the Standard Reliability configuration, do a system restart (enter **reset system 4**) as soon as possible. For systems equipped with the High Reliability or Critical Reliability configuration, perform the following steps as soon as possible:

1. Busyout the standby SPE (enter **busyout spe-standby**).
2. Reboot the standby SPE (enter **reset spe-standby 4**).
3. Wait for the standby SPE to reboot (about 5 minutes).
4. Lock the standby SPE into active mode using the SPE-SELECT switches on the DUPINT circuit packs. This will cause the new active SPE to perform COLD reset and the new standby SPE will perform a reboot

Table 9-222. TEST #903 RAM Checksum Test

Error Code	Test Result	Description/ Recommendation
100	ABORT	The requested test did not complete within the allowable time period. 1. Retry the command. 2. If the test continues to abort, follow normal escalation procedures.
1022 1335 2500	ABORT	Internal System Error. 1. Retry the command. 2. If the test continues to abort, follow normal escalation procedures.
1338	ABORT	The test is not allowed to run since a planned SPE interchange is in progress. This may be caused by a planned interchange initiated automatically during 24 hour scheduled testing. 1. Wait 3 minutes and retry the command. 2. If the test continues to abort, follow normal escalation procedures.

Continued on next page

Table 9-222. TEST #903 RAM Checksum Test — *Continued*

Error Code	Test Result	Description/ Recommendation
1339	ABORT	The test could not run on the standby Memory circuit pack in the standby SPE carrier because the standby SPE is unavailable. 1. Refer to the section on STBY-SPE Maintenance procedures for information on why a standby SPE may be unavailable and what repair actions should be taken. The **status spe** screen should indicate that handshake is down. This may be caused by a variety of reasons such as the SPE-SELECT switches on the DUPINT circuit packs being set to the position of the active SPE, a failure of the DUPINT circuit pack, or loss of power on the standby SPE. The *SPE Selected field* on the **status spe-standby** screen will display *spe a* or *spe b* if both SPE-SELECT switches are in the a or b positions, respectively.
2000	ABORT	Response to the test request was not received within the allowable time period. If the system is equipped with the High Reliability or Critical Reliability Configuration and if the Memory circuit pack is on the standby SPE, this abort code may indicate that the standby SPE is not responding to the handshake message. If this is the case, the standby SPE maintenance software may take up to two minutes to indicate that handshake communication with the standby SPE is down. The ABORT code will then change to 1339 (handshake communication down). 1. Retry the command at 1 minute intervals, a maximum of 3 times. 2. If the test continues to abort with this abort code, follow normal escalation procedures.
2315	ABORT	The test was not run, because this is an extra Memory circuit pack. No testing is allowed for extra Memory circuit packs.

Continued on next page

Table 9-222. TEST #903 RAM Checksum Test — *Continued*

Error Code	Test Result	Description/ Recommendation
2334	ABORT	The hardware mailbox on the standby Duplication Interface board is not ready to receive messages. 1. Retry the command at 1 minute intervals, a maximum of 5 times. 2. If the test continues to abort with this abort code, follow normal escalation procedures.
	FAIL	The system may or may not continue to operate correctly. The system may fail at some future date when some action requires access to the corrupted area of the RAM. For systems equipped with the Standard Reliability configuration: 1. Restart the system with a **reset system 4** and observe the startup memory tests (refer to Chapter 4, "Initialization and Recovery", for a list of tests). 2. If the startup diagnostics pass all memory tests, but the error returns, follow normal escalation procedures. For systems equipped with the High Reliability or Critical Reliability configuration: 1. Busyout the standby SPE (enter **busyout spe-standby**). 2. Reboot the standby SPE (enter **reset spe-standby 4**). 3. Wait for the standby SPE to reboot (about 5 minutes). 4. Lock the standby SPE into active mode using the SPE-SELECT switches on the DUPINT circuit packs. This will cause the new active SPE to perform COLD reset and the new standby SPE will perform a reboot. 5. If the startup diagnostics pass all memory tests, but the error returns, follow normal escalation procedures.
	PASS	The RAM checksum is correct.

Memory Parity Checker Test (#906)

This test checks the operation of the Memory circuit pack parity generators and checkers. If the **test memory a|b** command is used, this test executes once for each equipped Memory circuit pack

Table 9-223. TEST #906 Memory Parity Checker Test

Error Code	Test Result	Description/ Recommendation
100	ABORT	The requested test did not complete within the allowable time period. 1. Retry the command. 2. If the test continues to abort, follow normal escalation procedures.
1022 1335 2500	ABORT	Internal System Error. 1. Retry the command. 2. If the test continues to abort, follow normal escalation procedures.
1338	ABORT	The test is not allowed to run since a planned SPE interchange is in progress. This may be caused by a planned interchange initiated automatically during 24 hour scheduled testing. 1. Wait 3 minutes and retry the command. 2. If the test continues to abort, follow normal escalation procedures.
1339	ABORT	The test could not run on the standby Memory circuit pack in the standby SPE carrier because the standby SPE is unavailable. 1. Refer to the section on STBY-SPE Maintenance procedures for information on why a standby SPE may be unavailable and what repair actions should be taken. The **status spe** screen should indicate that handshake is down. This may be caused by a variety of reasons such as the SPE-SELECT switches on the DUPINT circuit packs being set to the position of the active SPE, a failure of the DUPINT circuit pack, or loss of power on the standby SPE. The *SPE Selected field* on the **status spe-standby** screen will display *spe a* or *spe b* if both SPE-SELECT switches are in the a or b positions, respectively.

Continued on next page

Table 9-223. TEST #906 Memory Parity Checker Test — *Continued*

Error Code	Test Result	Description/ Recommendation
2000	ABORT	Response to the test request was not received within the allowable time period. If the system is equipped with the High Reliability or Critical Reliability Configuration and if the Memory circuit pack is on the standby SPE, this abort code may indicate that the standby SPE is not responding to the handshake message. If this is the case, the standby SPE maintenance software may take up to two minutes to indicate that handshake communication with the standby SPE is down. The ABORT code will then change to 1339 (handshake communication down). 1. Retry the command at 1 minute intervals, a maximum of 3 times. 2. If the test continues to abort with this abort code, follow normal escalation procedures.
2315	ABORT	The test was not run, because this is an extra Memory circuit pack. No testing is allowed for extra Memory circuit packs.
2334	ABORT	The hardware mailbox on the standby Duplication Interface board is not ready to receive messages. 1. Retry the command at 1 minute intervals, a maximum of 5 times. 2. If the test continues to abort with this abort code, follow normal escalation procedures.

Continued on next page

Table 9-223. TEST #906 Memory Parity Checker Test — *Continued*

Error Code	Test Result	Description/ Recommendation
	FAIL	The Memory circuit pack cannot detect parity error conditions. If the test fails on all equipped Memory circuit packs, the Processor may be at fault. Run the tests described in the PROCR section of this manual. 1. Retry the command. 2. If the test continues to fail, replace the Memory circuit pack. 3. If the test continues to fail, replace the Processor circuit pack. 4. If the test continues to fail replacing after the Memory and Processor circuit packs, follow normal escalation procedures. To replace the circuit packs, use the procedure described in *Replacing SPE Circuit Packs* in Chapter 5, "Responding to Alarms and Errors".
	PASS	The Memory Parity Checker circuit is operating properly.

Memory Error Detection/Correction Test (#907)

This test checks the error detection/correction circuitry on the Memory circuit pack. It tests a few reserved memory locations to verify that single bit errors can be corrected and multiple bit errors can be detected. If the **test memory a|b** command is used, this test executes once for each equipped Memory circuit pack

Table 9-224. TEST #907 Memory Error Detection/ Correction Test

Error Code	Test Result	Description/ Recommendation
100	ABORT	The requested test did not complete within the allowable time period. 1. Retry the command. 2. If the test continues to abort, follow normal escalation procedures.
1022 1335 2500	ABORT	Internal System Error. 1. Retry the command. 2. If the test continues to abort, follow normal escalation procedures.
1338	ABORT	The test is not allowed to run since a planned SPE interchange is in progress. This may be caused by a planned interchange initiated automatically during 24 hour scheduled testing. 1. Wait 3 minutes and retry the command. 2. If the test continues to abort, follow normal escalation procedures.

Continued on next page

Table 9-224. TEST #907 Memory Error Detection/ Correction Test — *Continued*

Error Code	Test Result	Description/ Recommendation
1339	ABORT	The test could not run on the standby Memory circuit pack in the standby SPE carrier because the standby SPE is unavailable. 1. Refer to the section on STBY-SPE Maintenance procedures for information on why a standby SPE may be unavailable and what repair actions should be taken. The **status spe** screen should indicate that handshake is down. This may be caused by a variety of reasons such as the SPE-SELECT switches on the DUPINT circuit packs being set to the position of the active SPE, a failure of the DUPINT circuit pack, or loss of power on the standby SPE. The *SPE Selected field* on the **status spe-standby** screen will display *spe a* or *spe b* if both SPE-SELECT switches are in the a or b positions, respectively.
2000	ABORT	Response to the test request was not received within the allowable time period. If the system is equipped with the High Reliability or Critical Reliability Configuration and if the Memory circuit pack is on the standby SPE, this abort code may indicate that the standby SPE is not responding to the handshake message. If this is the case, the standby SPE maintenance software may take up to two minutes to indicate that handshake communication with the standby SPE is down. The ABORT code will then change to 1339 (handshake communication down). 1. Retry the command at 1 minute intervals, a maximum of 3 times. 2. If the test continues to abort with this abort code, follow normal escalation procedures.
2315	ABORT	The test was not run, because this is an extra Memory circuit pack. No testing is allowed for extra Memory circuit packs.

Continued on next page

Table 9-224. TEST #907 Memory Error Detection/ Correction Test — *Continued*

Error Code	Test Result	Description/ Recommendation
2334	ABORT	The hardware mailbox on the standby Duplication Interface board is not ready to receive messages. 1. Retry the command at 1 minute intervals, a maximum of 5 times. 2. If the test continues to abort with this abort code, follow normal escalation procedures.
	FAIL	The Memory EDC circuitry is not working correctly. The system may not continue to operate correctly if single or multiple bit errors occur in Memory at a later time. If the test fails on all equipped Memory circuit packs, the Processor may be at fault. Run the tests described in the Processor section of this manual. 1. Replace the affected Memory circuit when convenient. 2. If the test continues to fail after replacing the Memory circuit pack, replace the Processor circuit pack. 3. If the test continues to fail after replacing the Memory and Processor circuit packs, follow normal escalation procedures. To replace the circuit packs, use the procedure described in *Replacing SPE Circuit Packs* in Chapter 5, "Responding to Alarms and Errors".
	PASS	The Memory EDC circuitry is working normally.

Memory Burst Read Test (#908)

This test verifies that the Memory Burst Read function works properly on both the Memory and Processor circuit packs. If the **test memory a|b** command is used, this test executes once for each equipped Memory circuit pack

Table 9-225. TEST #908 Memory Burst Read Test

Error Code	Test Result	Description/ Recommendation
100	ABORT	The requested test did not complete within the allowable time period. 1. Retry the command. 2. If the test continues to abort, follow normal escalation procedures.
1022 1335 2500	ABORT	Internal System Error. 1. Retry the command. 2. If the test continues to abort, follow normal escalation procedures.
1338	ABORT	The test is not allowed to run since a planned SPE interchange is in progress. This may be caused by a planned interchange initiated automatically during 24 hour scheduled testing. 1. Wait 3 minutes and retry the command. 2. If the test continues to abort, follow normal escalation procedures.
1339	ABORT	The test could not run on the standby Memory circuit pack in the standby SPE carrier because the standby SPE is unavailable. 1. Refer to the section on STBY-SPE maintenance procedures for information on why a standby SPE may be unavailable and what repair actions should be taken. The **status spe** screen should indicate that handshake is down. This may be caused by a variety of reasons such as the SPE-SELECT switches on the DUPINT circuit packs being set to the position of the active SPE, a failure of the DUPINT circuit pack, or loss of power on the standby SPE. The *SPE Selected field* on the **status spe-standby** screen will display *spe a* or *spe b* if both SPE-SELECT switches are in the a or b positions, respectively.

Continued on next page

Table 9-225. TEST #908 Memory Burst Read Test — *Continued*

Error Code	Test Result	Description/ Recommendation
2000	ABORT	Response to the test request was not received within the allowable time period. If the system is equipped with the High Reliability or Critical Reliability Configuration and if the Memory circuit pack is on the standby SPE, this abort code may indicate that the standby SPE is not responding to the handshake message. If this is the case, the standby SPE maintenance software may take up to two minutes to indicate that handshake communication with the standby SPE is down. The ABORT code will then change to 1339 (handshake communication down). 1. Retry the command at 1 minute intervals, a maximum of 3 times. 2. If the test continues to abort with this abort code, follow normal escalation procedures.
2315	ABORT	The test was not run, because this is an extra Memory circuit pack. No testing is allowed for extra Memory circuit packs.
2334	ABORT	The hardware mailbox on the standby Duplication Interface board is not ready to receive messages. 1. Retry the command at 1 minute intervals, a maximum of 5 times. 2. If the test continues to abort with this abort code, follow normal escalation procedures.

Continued on next page

Table 9-225. TEST #908 Memory Burst Read Test — *Continued*

Error Code	Test Result	Description/ Recommendation
	FAIL	The Burst Read circuit is not functioning properly. 1. If the test fails on more than one Memory circuit pack, replace the Processor and retry the test. 2. If the test continues to fail on multiple Memory circuit packs, escalate the problem. 3. If the test fails only on one Memory circuit pack, replace the affected Memory circuit pack. 4. If the test continues to fail only on the same Memory circuit pack, replace the Processor. 5. If the test continues to fail after replacing the Processor and Memory circuit packs, follow normal escalation procedures. To replace the circuit packs, use the procedure described in *Replacing SPE Circuit Packs* in Chapter 5, "Responding to Alarms and Errors".
	PASS	The Burst Read portion of the Memory and Processor circuit packs is operating correctly.

MET-BD (MET Line Circuit Pack)

MO Name As It Appears in Alarm Log	Alarm Level	Initial System Technician Command to Run (a)	Full Name of MO
MET-BD	MINOR	test board UUCSS sh	MET Line Circuit Pack
MET-BD	WARNING	test board UUCSS sh	MET Line Circuit Pack

a. *UU* is the universal cabinet number (1 for PPN, 2 - 44 for EPNs). *C* is the carrier designation (A, B, C, D, or E). *SS* is the number of the slot in which the circuit pack resides (01 to 21).

Refer to XXX-BD (Common Port Circuit Pack) Maintenance documentation for circuit pack level errors. See also MET-LINE (MET Line) Maintenance documentation for related line information.

MET-LINE (MET Line)

MO Name As It Appears in Alarm Log	Alarm Level	Initial System Technician Command to Run (a)	Full Name of MO
MET-LINE	MINOR	test port UUCSSpp l	MET Line
MET-LINE	WARNING	test port UUCSSpp sh	MET Line

a. UU is the universal cabinet number (1 for PPN, 2 - 44 for EPNs). C is the carrier designation (A, B, C, D, or E). SS is the number of the slot in which the circuit pack resides (01 to 21). pp is the two digit port number (01, 02, ...).

Electronic Station is the common term for the MET (Multibutton Electronic Telephone) Station Set. Although originally introduced for use in earlier PBX systems, they can be used in G3r systems.

The TN735 MET Line circuit pack supports four of these Multifunctional Electronic Sets as shown below. Each MET set uses three pairs of wires: an analog voice pair, a transmit pair, and a receive pair. Power is sent over the transmit and receive pairs. The MET Line circuit pack supports all 10-, 20-, and 30-button sets.

MET Line interactions are shown in Figure 9-64 on the next page.

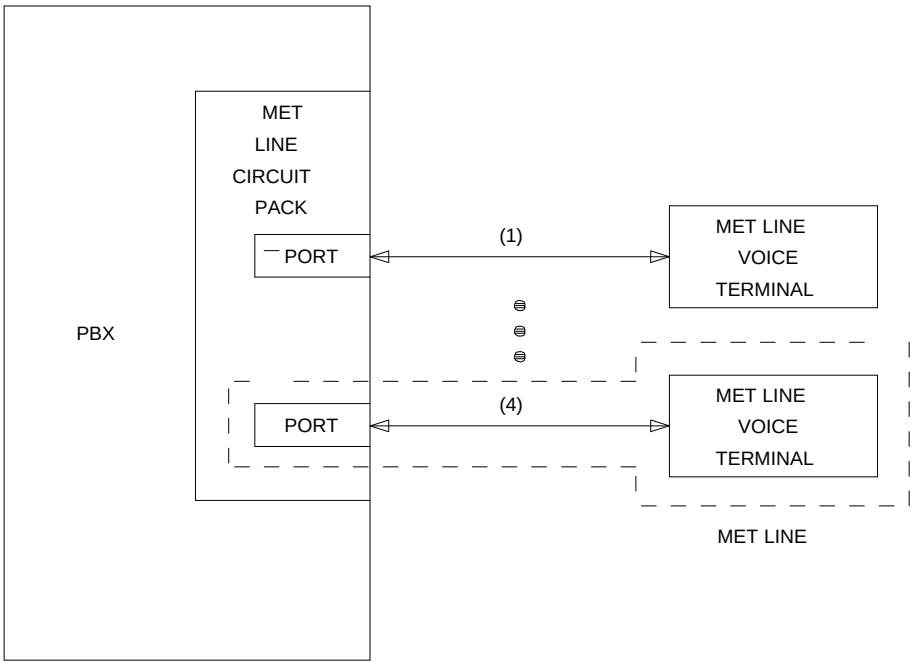

Figure 9-64. ISDN-BRI Port Interactions

Note that the use of the Recall button on the MET set has been changed. Instead of being used as it was in earlier PBX systems, the Recall button is now a self-test button and, when pressed, will light all of the lamps on the MET set and run the ringer update.

This section describes MET-LINE (MET Line) maintenance. MET-LINE maintenance is closely related to, and interacts with, MET-BD (MET Line circuit pack) maintenance. This interaction should be kept in mind when troubleshooting MET Line problems.

This section occasionally refers to a station's *service states*. The service states are defined as follows:

Out-of-Service	The port, and thus the station, have been removed from service. A busyout of a port will cause it to be out-of-service.
Ready-for-Service	The port on the circuit pack has been put into service, but the voice terminal has not yet established signaling communications with the port.
In-Service	The voice terminal has established signaling communications with the port, and the system is ready to process calls to and from that station. A terminal in the ready-for-service state will progress to the in-service state if it is functioning normally, but it can also be forced into the in-service state if it goes off-hook.

Use the **status station** command to determine terminal service state. Status is reported as either out-of-service, in-service, or ''disconnect,'' which means the station is in the ready-for-service state.

Hardware Error Log Entries and Test to Clear Values

MET Line Error Log Entries					
Error Type	**Aux Data**	**Associated Test**	**Alarm Level**	**On/Off Board**	**Test to Clear Value**
0*	0	Any	Any	Any	test port UUCSSpp sh r 1
1 (a)	40987	None			
18 (b)	0	busyout port UUCSSpp	WARNING	OFF	release port UUCSSpp
130 (c)		None	WARNING	ON	test port UUCSSpp sh
257 (d)	40988	None	MIN/WRN**	OFF	
513 (e)	40965	Hybrid Line Station Audits Test (#61)	WARNING	OFF	test port UUCSSpp sh r 4
769		Port Diagnostic Test (#35)	MIN/WRN**	ON	test port UUCSSpp l r 3
1025		Hybrid & Conf. Circuits Test (#57)	MIN/WRN**	ON	test port UUCSSpp l r 3
1537 (f)	40968	None	MIN/WRN**	OFF	
1793		TDM NPE Crosstalk Test (#6	MIN/WRN**	ON	test port UUCSSpp l r 3
2049 (g)	32770				
2049 (h)	40967				
3840 (i)	40989				

* Run the Short Test Sequence first. If all tests pass, run the Long Test Sequence. Refer to the appropriate test description and follow the recommended procedures.

** Major or Minor alarms on this MO may be downgraded to Warning alarms based on the values used in the **set options** command.

Notes:

a. The data link between the port and the terminal is not operational, i.e., the port circuitry has detected an off-board problem. Verify that the MET set is connected and that the Electronic Power Feed (EPF) test passes. If data transmission problems are experienced, check for defective wiring or a defective voice terminal, or move terminal electrically closer to the switch

(i.e., reduce the length of the wiring between the terminal and the switch). If the problem persists, replace the circuit pack. Once the problem is resolved, the system retires the alarm after a predetermined time delay.

b. Error type 18 is logged when maintenance personnel busyout the port. maintenance personnel. The port is released from busyout via the **release port UUCSSpp** command.

c. The circuit pack has been removed or has been insane for more than 11 minutes. To clear the error, reinsert or replace the circuit pack.

d. The EPF has been turned off due to an overcurrent condition at the voice terminal. Check for defective wiring or a damaged jack, and verify that the voice terminal is an MET set. Once the problem is resolved, the system retires the alarm after a predetermined time delay.

e. The EPF inquiry audit has returned ‘‘epf-no-load’’ messages. This usually indicates that the voice terminal has been disconnected or that there is a defect in the wiring to the terminal. Check out both possibilities.

   When the EPF inquiry audit subsequently receives an ‘‘epf-on-ok’’ or an ‘‘epf-off-ok’’ message, the system will take action to retire the alarm.

f. The port has reported a problem with the data link to the voice terminal. Ignore this error if there are no complaints about the voice terminal. Otherwise, make sure the voice terminal is connected, check for defective wiring, check for a defective voice terminal, and decrease the length of the wiring between the voice terminal and the switch. If the problem persists, replace the circuit pack.

g. The voice terminal went off-hook while it was in the ready-for-service state. Use the **status system** command to determine the state of the voice terminal. The off-hook should have moved the station to in-service. No repair action is necessary.

h. This code is generated when the link between the circuit pack and the voice terminal is successfully reset. No repair action is necessary.

i. The hardware sent an uplink message indicating that the Electric Power Feed (EPF) is not loaded, i.e., it is not currently supplying power to a voice terminal. No repair action is necessary.

System Technician-Demanded Tests: Descriptions and Error Codes

Always investigate tests in the order presented in the table below when inspecting errors in the system. By clearing error codes associated with the *Port Diagnostic Test,* for example, you may also clear errors generated from other tests in the testing sequence.

Order of Investigation	Short Test Sequence	Long Test Sequence	D/ND*
NPE Crosstalk Test (#6)		X	ND
Port Diagnostic Test (#35)		X	ND
MFAT Electronic Power Feed Test (#56)		X	ND
Hybrid Circuit and Conference Circuit Test (#57)		X	ND
Station Lamp Update Test (#60)	X	X	ND
Station Audits Test (#61)	X	X	ND
Ringer Update Test (#62)	X	X	ND

* D = Destructive; ND = Nondestructive

NPE Crosstalk Test (#6)

One or more Network Processing Elements (NPEs) reside on each circuit pack with a TDM Bus interface. The NPE controls port connectivity and gain, and provides conferencing functions on a per port basis. The NPE Crosstalk Test verifies that this port's NPE channel talks on the selected time slot and never crosses over to time slots reserved for other connections. If the NPE is not working correctly, one-way and noisy connections may be observed. This test is part of a port's Long Test Sequence and takes about 20 to 30 seconds to complete

Table 9-226. TEST #6 NPE Crosstalk Test

Error Code	Test Result	Description/ Recommendation
	ABORT	Could not allocate the necessary system resources to run this test. 1. Retry the command at 1-minute intervals a maximum of 5 times. 2. If the test continues to abort, escalate the problem.
1000	ABORT	System resources required to run this test are not available. The port may be busy with a valid call. Use the **display port UUCSSpp** command to determine the station extension of the port. Use **status station** to determine the service state of the port. If the service state indicates that the port is in use, then the port is unavailable for certain tests. (See Chapter 8, "Maintenance Commands", for a full description of all possible states.) You must wait until the port is idle before retesting. 1. If the port status is idle, then retry the command at 1-minute intervals a maximum of 5 times. 2. If the test continues to abort, escalate the problem.
1001	ABORT	Could not allocate the necessary system resources to run this test. 1. Retry the command at 1-minute intervals a maximum of 5 times. 2. If the test continues to abort, escalate the problem.

Continued on next page

Table 9-226. TEST #6 NPE Crosstalk Test — *Continued*

Error Code	Test Result	Description/ Recommendation
1002	ABORT	The system could not allocate time slots for the test. The system may be under heavy traffic conditions or it may have time slots out-of-service due to TDM-BUS errors. Refer to TDM-BUS (TDM Bus) Maintenance documentation to diagnose any active TDM-BUS errors. 1. If system has no TDM-BUS errors and is not handling heavy traffic, repeat test at 1-minute intervals a maximum of 5 times. 2. If the test continues to abort, escalate the problem.
1003	ABORT	The system could not allocate a tone receiver for the test. The system may be oversized for the number of Tone Detectors present or some Tone Detectors may be out-of-service. 1. Look for TTR-LEV errors in the Error Log. If present, refer to TTR-LEV (TTR Level) Maintenance documentation. 2. Look for TONE-PT errors in the Error Log. If present, refer to TONE-PT (Tone Generator) Maintenance documentation. 3. If neither condition exists, retry the test at 1-minute intervals a maximum of 5 times. 4. If the test continues to abort, escalate the problem.
1004	ABORT	The port was seized by a valid call during the test. The test has been aborted. Use the **display port UUCSSpp** command to determine the station extension of the port. Use the **status station** command to determine the service state of the port. If the service state indicates that the port is in use, then the port is unavailable for certain tests. (See Chapter 8, "Maintenance Commands", for a full description of all possible states.) You must wait until the port is idle before retesting. 1. Retry the command at 1-minute intervals a maximum of 5 times. 2. If the test continues to abort and the port is not in use, escalate the problem.

Continued on next page

Table 9-226. TEST #6 NPE Crosstalk Test — *Continued*

Error Code	Test Result	Description/ Recommendation
1018	ABORT	Test disabled via administration. This only applies to analog stations. 1. To enable test, set the Test field on the station administration screen for the particular analog station being tested to ''y.'' Use the **change station extension** command.
2000	ABORT	Response to the test request was not received within the allowable time period. 1. Retry the command at 1-minute intervals a maximum of 5 times. 2. If the test continues to abort, escalate the problem.
2020	ABORT	The test did not run due to an already existing error on the specific port or a more general circuit pack error. 1. Examine Error Log for existing errors against this port or the circuit pack and attempt to diagnose the already existing error.
2100	ABORT	Could not allocate the necessary system resources to run this test. 1. Retry the command at 1-minute intervals a maximum of 5 times. 2. If the test continues to abort, escalate the problem.
Any	FAIL	The NPE of the tested port was found to be transmitting in error. This will cause noisy and unreliable connections. 1. Replace the circuit pack.
	PASS	The port uses its allocated time slots correctly. Investigate user-reported troubles on this port using other port tests and by examining station, trunk, or external wiring.

Port Diagnostic Test (#35)

This test checks a port's battery feed circuitry. The battery feed circuitry is tested for proper battery voltage by testing the switchhook state. The MET set must be on-hook for the test to run

Table 9-227. TEST #35 Port Diagnostic Test

Error Code	Test Result	Description/ Recommendation
	ABORT	Internal system error. 1. Retry the command at 1-minute intervals a maximum of 5 times. 2. If the test continues to abort, escalate the problem.
1000	ABORT	System resources required to run this test are not available. The port may be busy with a valid call. Use the **display port UUCSSpp** command to determine the station extension of the port. Use the **status station** command to determine the service state of the port. If the service state indicates that the port is in use, then the port is unavailable for certain tests. (See Chapter 8, "Maintenance Commands", for a full description of all possible states.) You must wait until the port is idle before retesting. 1. If the port status is idle, then retry the command at 1-minute intervals a maximum of 5 times. 2. If the test continues to abort, escalate the problem.
1004	ABORT	The port was seized by a valid call during the test. The test has been aborted. Use the **display port UUCSSpp** command to determine the station extension of the port. Use the **status station** command to determine the service state of the port. If the service state indicates that the port is in use, then the port is unavailable for certain tests. (See Chapter 8, "Maintenance Commands", for a full description of all possible states.) You must wait until the port is idle before retesting. 1. Retry the command at 1-minute intervals a maximum of 5 times. 2. If the test continues to abort and the port is not in use, escalate the problem.

Continued on next page

Table 9-227. TEST #35 Port Diagnostic Test — *Continued*

Error Code	Test Result	Description/ Recommendation
1018	ABORT	Test disabled via software patch. 1. Escalate to next tier level.
2000	ABORT	This port may have been busied out. 1. Look in the Error Log for Error Type 18 (port busied out) for this port. If this error type is present, then release the port via the **release station <extension>** command and run the test again. 2. Make sure that the terminal is connected. 3. Retry the command at 1-minute intervals a maximum of 5 times. 4. If the test continues to abort, escalate the problem.
2100	ABORT	Could not allocate the necessary system resources to run this test. 1. Retry the command at 1-minute intervals a maximum of 5 times. 2. If the test continues to abort, escalate the problem.
	FAIL	Battery Feed Test failed. This port is out-of-service. 1. Other ports on this circuit pack are not affected. Place user on a different port, if available, until a replacement circuit pack can be obtained. 2. Replace circuit pack when available.
	PASS	Battery Feed Test passed. Current flow is properly detected for this port. 1. If users are reporting problems, examine connections to the port. 2. Escalate problem.

MFAT Electronic Power Feed (#56)

The software requests that the EPF be turned on for a given port. The hardware then attempts to turn on that port's station power unit. If no current is drawn, the station is probably not connected. If an overcurrent condition is sensed (too much current is drawn), a short may exist in the loop, or the voice terminal may be defective. The test results in a message indicating that either the EPF was turned on successfully with no problems, or an overcurrent condition exists. This test is repeated after a 5 second delay. If either test is not successful, the test aborts

Table 9-228. TEST #56 MFAT Electronic Power Feed Test

Error Code	Test Result	Description/ Recommendation
	ABORT	Internal System Error 1. Retry the command at 1-minute intervals a maximum of 5 times. 2. If the test continues to abort, escalate the problem.
1000	ABORT	System resources required to run this test are not available. The port may be busy with a valid call. Use the **display port UUCSSpp** command to determine the station extension of the port. Use the **status station** command to determine the service state of the port. If the service state indicates that the port is in use, then the port is unavailable for certain tests. (See Chapter 8, "Maintenance Commands", for a full description of all possible states.) You must wait until the port is idle before retesting. 1. If the port status is idle, then retry the command at 1-minute intervals a maximum of 5 times. 2. If the test continues to abort, escalate the problem.

Continued on next page

Table 9-228. TEST #56 MFAT Electronic Power Feed Test — *Continued*

Error Code	Test Result	Description/ Recommendation
	FAIL	Internal System Error 1. Retry the command at 1-minute intervals a maximum of 5 times. 2. If the test continues to abort, escalate the problem.
	PASS	Electronic Power Feed Test passed. The message to turn on the power to the station was successfully sent to the port. 1. Although this test will never actually return a FAIL result except for the **Internal System Error** described above, it will log an error if the overcurrent case is detected by the hardware. Check the Error Log for any entries with Error Type 257 when the test has completed. 2. If Error Type 257 does not appear in the Error Log within 10 seconds after completion of this test, it is safe to assume that the test sensed no problems with the power to the station. You can verify that the station is powered up correctly by executing a self-test on the station, and checking that all the feature buttons are operating. 3. The appearance of Error Type 257 in the Error Log indicates a station power problem. Check for a wiring short, a damaged jack, a defective voice terminal, or an incorrect type of terminal.

MET Circuit and Conference Circuit Test (#57)

This test checks two different port circuit functions. The Hybrid Circuit test performs an analog reflective looparound measurement on the port's hybrid circuitry. The Conference Circuit test performs a conference test on the port's NPE.

For Hybrid Circuit Test results to be valid, a voice terminal must be connected to the port being tested. The test instructs the on-board microprocessor to put the port in analog reflective looparound mode. The Tone-Clock circuit pack supplies a 1004-Hz tone to the port's listen time slot and a General Purpose Tone Detector (GPTD) measures the level of the reflected signal appearing on port's talk time slot.

The Conference Test is performed only if the Hybrid Circuit Test passes. The Conference Circuit Test verifies that the Network Processing Element (NPE) is able to correctly conference several test tones together. The test is executed in two parts. The first half of the test verifies operation of the NPE's first three conference channels, and the second half verifies the NPE's remaining four conference channels. The test puts the NPE in loop-around mode and instructs it to talk on a specified time slot while listening to a 1004-Hz tone using the Conference Channels. A GPTD then measures the signal and noise levels of the conferenced output and reports whether or not these fall within a specified acceptable range

Table 9-229. TEST #57 Hybrid Circuit and Conference Circuit Test

Error Code	Test Result	Description/ Recommendation
	ABORT	Could not allocate the necessary system resources to run this test. 1. Retry the command at 1-minute intervals a maximum of 5 times. 2. If the test continues to abort, escalate the problem.
1000	ABORT	System resources required to run this test are not available. The port may be busy with a valid call. Use the **display port UUCSSpp** command to determine the station extension of the port. Use the **status station** command to determine the service state of the port. If the service state indicates that the port is in use, then the port is unavailable for certain tests. (See Chapter 8, "Maintenance Commands", for a full description of all possible states.)

Continued on next page

Table 9-229. TEST #57 Hybrid Circuit and Conference Circuit Test — *Continued*

Error Code	Test Result	Description/ Recommendation
		You must wait until the port is idle before retesting. 1. If the port status is idle, then retry the command at 1-minute intervals a maximum of 5 times. 2. If the test continues to abort, escalate the problem.
1001	ABORT	Could not allocate the necessary system resources to run this test. 1. Retry the command at 1-minute intervals a maximum of 5 times. 2. If the test continues to abort, escalate the problem.
1002	ABORT	The system could not allocate time slots for the test. The system may be under heavy traffic conditions or it may have time slots out-of-service due to TDM-BUS errors. Refer to TDM-BUS (TDM Bus) Maintenance documentation to diagnose any active TDM-BUS errors. 1. If system has no TDM-BUS errors and is not handling heavy traffic, repeat test at 1-minute intervals a maximum of 5 times. 2. If the test continues to abort, escalate the problem.
1003	ABORT	The system could not allocate a tone receiver for the test. The system may be oversized for the number of Tone Detectors present or some Tone Detectors may be out-of-service. 1. Look for TTR-LEV errors in the Error Log. If present, refer to TTR-LEV (TTR Level) Maintenance documentation. 2. Look for TONE-PT errors in the Error Log. If present, refer to TONE-PT (Tone Generator) Maintenance documentation. 3. If neither condition exists, retry the test at 1-minute intervals a maximum of 5 times. 4. If the test continues to abort, escalate the problem.

Continued on next page

Table 9-229. TEST #57 Hybrid Circuit and Conference Circuit Test — *Continued*

Error Code	Test Result	Description/ Recommendation
1004	ABORT	The port was seized by a valid call during the test. The test has been aborted. Use the **display port UUCSSpp** command to determine the station extension of the port. Use the **status station** command to determine the service state of the port. If the service state indicates that the port is in use, then the port is unavailable for certain tests. (See Chapter 8, "Maintenance Commands", for a full description of all possible states.) You must wait until the port is idle before retesting. 1. Retry the command at 1-minute intervals a maximum of 5 times. 2. If the test continues to abort and the port is not in use, escalate the problem.
2000	ABORT	Response to the test request was not received within the allowable time period. 1. Retry the command at 1-minute intervals a maximum of 5 times. 2. If the test continues to abort, escalate the problem.
2012	ABORT	Internal system error.
2103	ABORT	The system could not make the conference connection for the test. 1. Retry the command at 1-minute intervals a maximum of 5 times. 2. If the test continues to abort, escalate the problem.
7	FAIL	Conference Test failed. User may be able to use conference circuit without difficulty in some cases. In other extreme cases, conference calling will be totally restricted.

Continued on next page

Table 9-229. TEST #57 Hybrid Circuit and Conference Circuit Test — *Continued*

Error Code	Test Result	Description/ Recommendation
57	FAIL	Hybrid Circuit Test failed. This can result in noisy or bad connections. 1. Run circuit pack tests to check the Tone Generator circuit pack and the Tone Detector circuit pack, using **test board UUCSS short** command. 2. Resolve any problems that are detected on the Tone Generator circuit pack or Tone Detector circuit pack. 3. If the Tone Generator and Tone Detector circuit packs are functioning properly, and the test still fails, replace the MET Line circuit pack. **NOTE:** If the Hybrid Circuit and Conference Circuit Test fails for all ports on a circuit pack, a -5 volt power problem is indicated. If a TN736 or TN752 power unit circuit pack is present, either the 631DB AC power unit or the 676B DC power unit may be defective. (The 631DB power unit is used in a medium cabinet powered by an AC source. The 645B power unit is used in a medium cabinet powered by a DC power source.) The system may contain either a TN736 or a TN752 power unit circuit pack OR a 631DB AC power unit, *but not both types of power units.* To investigate problems with a 631DB power unit, refer to CARR-POW (Carrier Port Power Unit for AC-Powered Systems) Maintenance documentation. To investigate problems with a 645B power unit, refer to CARR-POW (Carrier Port Power Unit for DC-Powered Systems) Maintenance documentation.
	PASS	Hybrid Circuit and Conference Circuit Test passed. The hybrid circuitry is transmitting properly. 1. If complaints persist, investigate by using other port tests, and by examining the station, wiring, and connections.

MET Line Station Lamp Updates Test (#60)

For this test, the software lights the lamps on the terminal based on the status record contained in the processor. The lamp updates run only if the station is in-service

Table 9-230. TEST #60 MET Line Station Lamp Updates Test

Error Code	Test Result	Description/ Recommendation
1	ABORT	This port may have been busied out. 1. Look in the Error Log for Error Type 18 (port busied out) for this port. If this error type is present, then release the port via the **release station <extension>** command and run the test again. 2. Make sure that the terminal is connected. 3. Retry the command at 1-minute intervals a maximum of 5 times. 4. If the test continues to abort, escalate the problem.
2	ABORT	Internal System Error 1. Retry the command at 1-minute intervals a maximum of 5 times. 2. If the test continues to abort, escalate the problem.
3	ABORT	Station is in ready-for-service or out-of-service state. 1. Make sure terminal is connected. 2. Retry the command at 1-minute intervals a maximum of 5 times. 3. If the test continues to abort, escalate the problem.

Continued on next page

Table 9-230. TEST #60 MET Line Station Lamp Updates Test — *Continued*

Error Code	Test Result	Description/ Recommendation
1000	ABORT	System resources required to run this test are not available. The port may be busy with a valid call. Use the **display port UUCSSpp** command to determine the station extension of the port. Use the **status station** command to determine the service state of the port. If the service state indicates that the port is in use, then the port is unavailable for certain tests. (See Chapter 8, "Maintenance Commands", for a full description of all possible states.) You must wait until the port is idle before retesting. 1. If the port status is idle, then retry the command at 1-minute intervals a maximum of 5 times. 2. If the test continues to abort, escalate the problem.
	FAIL	Internal System Error. 1. Retry the command at 1-minute intervals a maximum of 5 times. 2. If the test continues to abort, escalate the problem.
	PASS	MET Line Station Lamp Updates completed successfully. 1. If complaints persist, investigate by using other circuit pack tests, and by examining the station, wiring, and connections.

MET Line Station Audits Test (#61)

This is a series of three tests that are classified as audits. These audits will abort if attempted on an out-of-service station. The tests are as follows:

Switchhook Audit	This is an update of the SPE records according to the circuit packs' records.
Bad Scan Inquiry	A message is sent uplink that contains a count that is generated due to certain events relating to the link conditions. This is an indication of data transmission problems between the MET Line circuit pack and the voice terminal.
EPF Inquiry	The status of the Electronic Power Feed is sent uplink. Possible conditions are: EPF-on-ok, EPF-off, EPF-no-load, and EPF-on-overcurrent.

Table 9-231. TEST #61 MET Line Station Audits Test

Error Code	Test Result	Description/ Recommendation
	ABORT	Internal System Error
1	ABORT	Internal System Error
2	ABORT	Internal System Error 1. Retry the command at 1-minute intervals a maximum of 5 times. 2. If the test continues to abort, escalate the problem.
3	ABORT	This port may have been demand busied out. 1. Look in the Error Log for Error Type 18 (port busied out) for this port. If this error type is present, release the port via the **release station <extension>** command and run the test again. 2. Make sure that the terminal is connected. 3. Retry the command at 1-minute intervals a maximum of 5 times. 4. If the test continues to abort, escalate the problem.

Continued on next page

Table 9-231. TEST #61 MET Line Station Audits Test — *Continued*

Error Code	Test Result	Description/ Recommendation
1000	ABORT	System resources required to run this test are not available. The port may be busy with a valid call. Use the **display port UUCSSpp** command to determine the station extension of the port. Use the **status station** command to determine the service state of the port. If the service state indicates that the port is in use, then the port is unavailable for certain tests. (See Chapter 8, "Maintenance Commands", for a full description of all possible states.) You must wait until the port is idle before retesting. 1. If the port status is idle, then retry the command at 1-minute intervals a maximum of 5 times. 2. If the test continues to abort, escalate the problem.
1004	ABORT	The port was seized by a valid call during the test. The test has been aborted. Use the **display port UUCSSpp** command to determine the station extension of the port. Use the **status station** command to determine the service state of the port. If the service state indicates that the port is in use, then the port is unavailable for certain tests. (See Chapter 8, "Maintenance Commands", for a full description of all possible states.) You must wait until the port is idle before retesting. 1. Retry the command at 1-minute intervals a maximum of 5 times. 2. If the test continues to abort and the port is not in use, escalate the problem.
2000	ABORT	Response to the test request was not received within the allowable time period.
	FAIL	Internal System Error 1. Retry the command at 1-minute intervals a maximum of 5 times. 2. If the test continues to abort, escalate the problem.

Continued on next page

Table 9-231. TEST #61 MET Line Station Audits Test — *Continued*

Error Code	Test Result	Description/ Recommendation
	PASS	Hybrid Line Station Audits passed. 1. Although this test will never actually return a FAIL result except for the **Internal System Error** described above, it is possible that it will enter Error Types 257 or 513 into the Error Log. To determine if there are any problems that don't show up in the test result, look for these error types in the Error Log. 2. If these errors appear in the Error Log, or if user complaints persist, investigate by using other circuit pack tests, and by examining the station, wiring, and connections.

MET Line Ringer Update Test (#62)

In this update, a ‘‘ringer on’’ or a ‘‘ringer off’’ message is sent to the firmware to start and stop the ringer on the set.

Table 9-232. TEST #62 MET Line Ringer Update Test

Error Code	Test Result	Description/ Recommendation
3	ABORT	This port may have been busied out. 1. Look in the Error Log for Error Type 18 (port busied out) for this port. If this error type is present, release the port via the **release station <extension>** command and run the test again. 2. Make sure that the terminal is connected. 3. Retry the command at 1-minute intervals a maximum of 5 times. 4. If the test continues to abort, escalate the problem.
1000	ABORT	System resources required to run this test are not available. The port may be busy with a valid call. Use the **display port UUCSSpp** command to determine the station extension of the port. Use the **status station** command to determine the service state of the port. If the service state indicates that the port is in use, then the port is unavailable for certain tests. (See Chapter 8, "Maintenance Commands", for a full description of all possible states.) You must wait until the port is idle before retesting. 1. If the port status is idle, then retry the command at 1-minute intervals a maximum of 5 times. 2. If the test continues to abort, escalate the problem.

Continued on next page

Table 9-232. TEST #62 MET Line Ringer Update Test — *Continued*

Error Code	Test Result	Description/ Recommendation
	FAIL	Internal System Error 1. Retry the command at 1-minute intervals a maximum of 5 times. 2. If the test continues to abort, escalate the problem.
	PASS	Hybrid Station Ringer Update passed. 1. If complaints persist, investigate using other circuit pack tests, and by examining the terminal, wiring, and connections.

MIS (Management Information System)

MO Name As It Appears in Alarm Log	Alarm Level	Initial System Technician Command to Run	Full Name of MO
MIS	WRN	release mis	Management Information System

The Management Information System (MIS)/Call Management System (CMS) maintenance object is used only to monitor MIS busyouts during administration of MIS translations. There are no hardware failures associated with this MO.

The MIS/CMS is an adjunct processor that collects Automatic Call Distribution (ACD) data sent from the switch. In order to change MIS translations, a switch administrator must first enter a **busyout mis** command at the G3-MT. When the MIS is busied out, the switch will stop sending ACD data to the MIS, and a Warning alarm will be raised.

When the switch administrator is finished, a **release mis** command should be entered at the terminal. This will clear the Warning alarm and allow the switch to send ACD data to the MIS.

Hardware Error Log Entries and Test to Clear Values

Management Information System Error Log Entries					
Error Type	**Aux Data**	**Associated Test**	**Alarm Level**	**On/Off Board**	**Test to Clear Value**
0*	0	Any	Any	Any	release mis
18(a)	0	busyout mis	WARNING	ON	release mis

* Run the Short Test Sequence first. If all tests pass, run the Long Test Sequence. Refer to the appropriate test description and follow the recommended procedures.

Notes:

a. When the **busyout MIS** command is issued, no data is sent to the MIS/CMS regardless of the link state. To allow data to be sent to MIS/CMS, a **release mis** command must be issued from the terminal.

MODEM-BD (Modem Pool Circuit Pack)

MO Name As It Appears in Alarm Log	Alarm Level	Initial System Technician Command to Run (a)	Full Name of MO
MODEM-BD	MIN	test board UUCSS sh	Modem Pool Circuit Pack
MODEM-BD	WRN	test board UUCSS sh	Modem Pool Circuit Pack

a. *UU* is the universal cabinet number (1 for PPN, 2 - 44 for EPNs). *C* is the carrier designation (A, B, C, D, or E). *SS* is the number of the slot in which the circuit pack resides (01 to 21).

Refer to XXX-BD (Common Port Circuit Pack) Maintenance documentation for circuit pack level errors. See also MODEM-PT (Modem Pool Port) Maintenance documentation for related port information.

MODEM-PT (Modem Pool Port)

MO Name As It Appears in Alarm Log	Alarm Level	Initial System Technician Command to Run (a)	Full Name of MO
MODEM-PT	MINOR	test port UUCSSpp s	Modem Pool Port

a. *UU* is the universal cabinet number (1 for PPN, 2 - 44 for EPNs). *C* is the carrier designation (A, B, C, D, or E). *SS* is the number of the slot in which the circuit pack resides (01 to 21). *pp* is the two digit port number (01, 02, ...).

The Modem Pool Port provides an interface for digital and analog data communication devices or ports connected to the PBX. It may be thought of as a PBX data communications ''conversion resource'' because it converts analog modem signals typically used in the telephone network into digital signals that are compatible with the internal PBX network and vice versa.

There may be a number of these conversion resources available in the PBX, each assigned to an available Modem Pool Group. Only one conversion resource is used per data connection. The PBX software usually adds the conversion resource into a data connection if it determines that it is necessary for the call. Typical connections that include Modem Pool conversion resources include data calls from Analog Line or Central Office Trunk ports to any digital port or Digital Line or Trunk ports to any analog port. An example of a Data Module to Central Office Trunk connection using a Modem Pool conversion resource is shown in Figure 9-65 on the next page. In the case where a local data call originates from an analog port normally used for voice service only and terminates on a digital port, a Data Origination access code must be dialed before the extension number for the Modem Pool conversion resource to be included in the connection.

Each Modem Pool conversion resource contains two ports. One of these, an analog port, is connected (via the PBX network) to the analog line or trunk port that is the source of the modem signal. The second port is referred to as the digital port and is connected (again through the PBX network) to the digital line or trunk port associated with the Data Module in the connection. The analog modem signals enter the analog port of the conversion resource in standard Pulse Code Modulation (PCM) format, but are converted into Data Communications Protocol (DCP) format before going to the digital line or trunk in the connection.

Integrated Modem Pools

There are two primary types of Modem Pool conversion resources available: an Integrated Pooled Modem and a Combined Modem Pool. The integrated TN758 Pooled Modem circuit pack contains two independent 300 or 1200 baud conversion resources. Each conversion resource contains two interfaces to the

PBX digital network: an analog port and a digital port. The analog port is connected through the PBX network to the analog line or trunk port containing the analog modem signals. The digital port connects through the PBX network to the digital line or trunk port in the call. Figure 9-65 below shows a typical end-to-end connection using a conversion resource on the integrated Pooled Modem circuit pack.

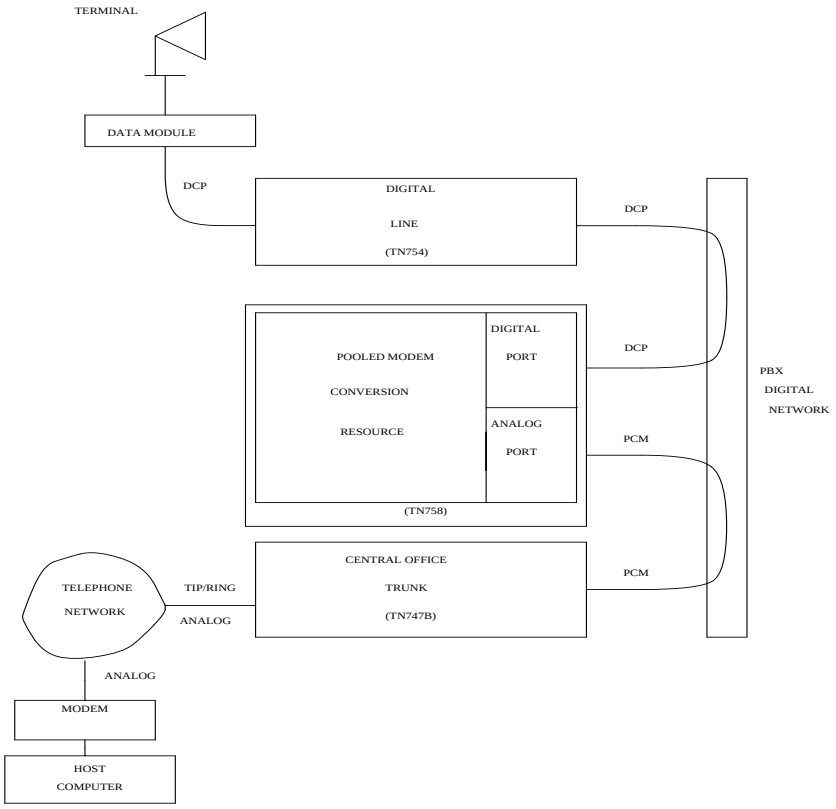

Figure 9-65. Typical Modem Pool Switched Connection with Integrated Pooled Modem

Combined Modem Pools

The Combined Modem Pool conversion resource is the second type available. The function served by the Combined Modem Pool is similar to that of the integrated Pooled Modem circuit pack, but the physical implementation is much different. It has the advantage of supporting any speed the external modem can support. The integrated Pooled Modem circuit pack can only support 300 or 1200 baud transmission rates. The Combined Modem Pool conversion resource

consists of a port on an Analog Line circuit pack, an external modem, a Data Module, and a port on a TN754 Digital Line circuit pack. The tip and ring interface of the Analog Line is connected to the modem, the RS-232C interface of the modem connects to the Data Module, and the DCP interface on the Data Module is connected to the Digital Line port.

The analog modem signals pass through the Analog Line port to the modem. The modem converts these to RS-232C signals which are passed on to the Data Module. The Data Module further converts the signals to the DCP protocol for the Digital Line port which passes the signals on to the PBX network.

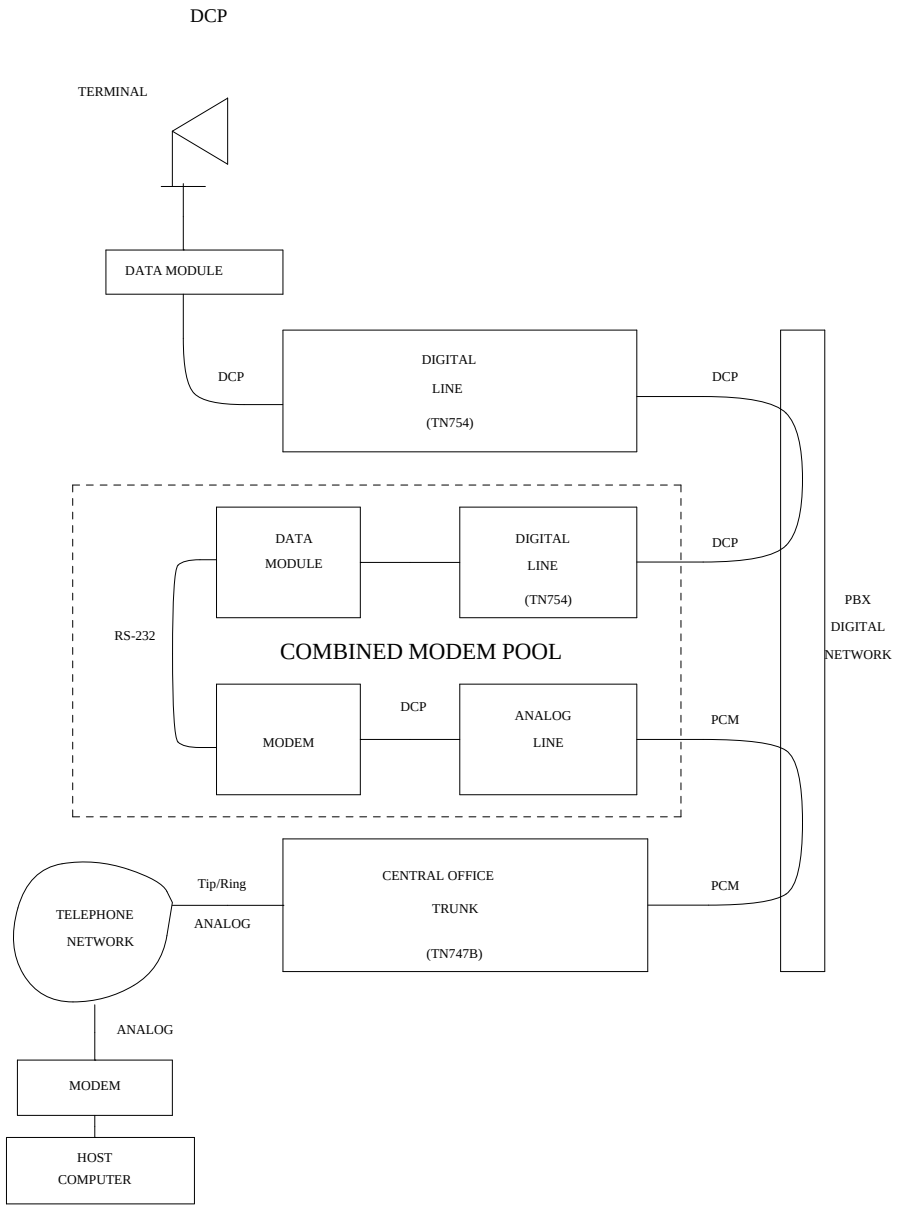

Figure 9-66. Typical Modem Pool Switched Connection with Combined Modem Pool

Troubleshooting Modem-Pool Symptoms

Certain customer-reported troubles may provide important information for troubleshooting Modem Pool problems. For example, if the customer tries to make a data call requiring a Modem Pool conversion resource, and the Modem Pool and Data Module speeds or other options do not match, they may receive a "CHECK OPTIONS" error message on the terminal. In this case, check the Modem Pool administration and Data Module option settings. If the Modem Pool is a Combined type, check also the option settings on the external Modem and Data Module, and cabling and connections between the Digital Line port, Data Module, Analog Line port, and Modem.

Testing Modem-Pools

There are three types of commands that can be used to test Modem Pool circuits: **test port, test modem-pool #,** and **test board.** The **test port** command is generally the first test to run after the Error Log is evaluated and an entry is found for a Modem Pool port. The **test modem-pool #** command runs the same tests as the **test port short** command performed on a Modem Pool port. However, the **test modem-pool #** command can automatically test all ports in the Modem Pool group number specified in #. The **test board** command performs the same tests as **test port** and **test modem-pool #** plus additional tests for circuits common to the entire circuit pack. Refer to the XXX-BD (Common Port Circuit Pack) section for information on additional tests performed with **test board** (#50, #52, and #53).

If the Modem Pool port or group being tested with **test modem-pool #** contains Combined Modem Pools, the ports on the associated Analog Line circuit pack and the TN754 Digital Line circuit pack are tested as a group. Note, however, that Combined Modem Pools are not tested with the tests described in this section and the repair information related to Tests # 96, 97, 98, and 99 is not applicable. The Analog port of the Combined Modem port is tested with Analog port tests, and the Digital port of the Combined Modem port is tested with TDMODULE/PDMODULE tests. Therefore, use the repair procedures outlined in the ANL-LINE, ANL-16-L, ANL-NE-L, and TDMODULE/PDMODULE Maintenance documentation when interpreting the results of the execution of the **test modem-pool #** command on Combined Modem Pools.

Hardware Error Log Entries and Test to Clear Values

Modem Pool Port Error Log Entries					
Error Type	**Aux Data**	**Associated Test**	**Alarm Level**	**On/Off Board**	**Test to Clear Value**
0*	0	Any	Any	Any	test port UUCSSpp sh r 1
18	0	busyout UUCSS	WARNING	OFF	release port UUCSS
130(a)		None	WARNING	ON	test port UUCSSpp sh
257		Conversion Resource Loop (#98)	MINOR	ON	test port UUCSS s r 3
513		Modem Conference (#97)	MINOR	ON	test port UUCSS l r 3
769		Modem NPE Crosstalk (#96)	MINOR	ON	test port UUCSS l r 3

* Run the Short Test Sequence first. If all tests pass, run the Long Test Sequence. Refer to the appropriate test description and follow the recommended procedures.

Note:

a. This error type indicates that the circuit pack has been removed or has been insane for more than 21 minutes. To clear the error, reinsert or replace the circuit pack.

System Technician-Demanded Tests: Descriptions and Error Codes

Always investigate tests in the order presented in the table below when inspecting errors in the system. By clearing error codes associated with the *Modem Pool Conference Test,* for example, you may also clear errors generated from other tests in the testing sequence.

Order of Investigation	Short Test Sequence	Long Test Sequence	D/ND*
Modem Pool NPE Crosstalk Test (#96)		X	D
Modem Pool Conference Test (#97)		X	D
Modem Pool Conversion Resource Loop Around Test (#98)	X	X	ND
Modem Pool Audits Test (#99)	X	X	ND

* D = Destructive; ND = Nondestructive

NOTE:
The tests in this section do not apply to Combined Modem Pool conversion resources. The standard Digital Line and/or Analog Line port tests are run on the ports associated with the Combined Modem Pool. Consult the test descriptions for those maintenance objects when repairing Combined Modem Pool arrangements.

Modem Pool NPE Crosstalk Test (#96)

This test is destructive.

The Modem Pool Crosstalk Test verifies that the NPE is connected only to the desired time slot and is not crosstalking on other time slots. This test operates exactly like Test #6 for other types of port circuits but is performed twice in order to test both NPEs in the Modem Pool Port

Table 9-233. TEST #96 Modem Pool NPE Crosstalk Test

Error Code	Test Result	Description/ Recommendation
	ABORT	System resources required for this test are not available. 1. Retry the command at 1-minute intervals a maximum of 5 times. 2. If the test continues to abort, escalate the problem.
1000	ABORT	System resources required to run this test are not available. The port may be in use on a valid call. Determine whether the port is available for testing. 1. Retry the command at 1-minute intervals a maximum of 5 times. 2. If the test continues to abort, escalate the problem.
1001	ABORT	System resources required to run this test are not available. 1. Retry the command at 1-minute intervals a maximum of 5 times. 2. If the test continues to abort, escalate the problem.
1002	ABORT	The system could not allocate time slots for the test. The system may be under heavy traffic conditions or it may have time slots out-of-service due to TDM-BUS errors. Refer to TDM-BUS (TDM Bus) Maintenance documentation to diagnose any active TDM-BUS errors. 1. If the system has no TDM-BUS errors and is not handling heavy traffic, repeat the test at 1-minute intervals a maximum of 5 times. 2. If the test continues to abort, escalate the problem.

Continued on next page

Table 9-233. TEST #96 Modem Pool NPE Crosstalk Test — *Continued*

Error Code	Test Result	Description/ Recommendation
1003	ABORT	The system could not allocate a tone receiver for the test. The system may be oversized for the number of Tone Detectors present or some Tone Detectors may be out-of-service. 1. Look for TTR-LEV errors in the Hardware Error Log. If present, refer to TTR-LEV (TTR Level) Maintenance documentation. 2. Look for TONE-PT errors in the Hardware Error Log. If present, refer to TONE-PT (Tone Generator) Maintenance documentation. 3. If neither condition exists, retry the test at 1-minute intervals a maximum of 5 times. 4. If the test continues to abort, escalate the problem.
1004	ABORT	The port has been seized by a user for a valid call. Determine whether the port is available for testing. 1. Retry the command at 1-minute intervals a maximum of 5 times. 2. If the test continues to abort, escalate the problem.
1020	ABORT	The test did not run due to a previously existing error on the specific port or because of a more general circuit pack error. 1. Examine the Hardware Error Log for existing errors against this port or the circuit pack, and attempt to diagnose the previously existing errors.
2000	ABORT	A response to the test request was not received within the allowable time period. 1. Retry the command at 1-minute intervals a maximum of 5 times. 2. If the test continues to abort, escalate the problem.
2100	ABORT	System resources required for this test are not available. 1. Retry the command at 1-minute intervals a maximum of 5 times. 2. If the test continues to abort, escalate the problem.

Continued on next page

Table 9-233. TEST #96 Modem Pool NPE Crosstalk Test — *Continued*

Error Code	Test Result	Description/ Recommendation
6000	ABORT	System resources needed to complete the test could not be allocated for the digital section of the Modem Pool conversion resource. Ordinarily, this means the conversion resource or other hardware used during the test was in use. 1. Wait 1 minute and attempt the test again. 2. If the same error occurs, use the **status port** command to determine whether the Modem Pool conversion resource is in use. 3. If the conversion resource is in use, and it is absolutely necessary to test it, the call will have to be dropped by issuing a **busyout port UUCSS** command against the conversion resource. Run the test again. 4. If the same error occurs while the conversion resource is idle, busyout both Modem Pool conversion resources on the TN758 Pooled Modem circuit pack containing the conversion resource under test. 5. If the test continues to fail or abort, replace the Pooled Modem circuit pack and retest. 6. If the test continues to abort with this error code after circuit pack replacement, escalate the problem.
6001	ABORT	System resources needed to complete the test could not be allocated for the analog section of the Modem Pool conversion resource. Follow the test procedures for the previous error code.

Continued on next page

Table 9-233. TEST #96 Modem Pool NPE Crosstalk Test — *Continued*

Error Code	Test Result	Description/ Recommendation
NONE	FAIL	The test failed. This error is internal to the Pooled Modem circuit pack and does not involve external equipment or interfaces. 1. Busy-out both of the TN758 Pooled Modem conversion resources on the circuit pack containing the failing conversion resource. 2. If the test continues to fail, replace the Pooled Modem circuit pack and retest. 3. If the circuit pack fails after replacement, escalate the problem.
ANY	FAIL	The NPE of the tested port was found to be transmitting in error. This condition will cause noisy and unreliable connections. 1. If the remaining ports are currently not in use (the yellow LED is off), reset the circuit pack and repeat the test. 2. If the test fails again, replace the circuit pack.
	PASS	The port is correctly using its allocated time slots. Investigate user-reported troubles on this port using other port tests and by examining station, trunk, or external wiring.

Modem Pool Conference Test (#97)

This test is destructive.

The Modem Pool Conference Test checks most of the switching and gain control functions provided by the NPE circuit in the analog section of the conversion resource. This test conferences a 1004-Hz tone through the NPE, looping it back so that it can be verified with a Tone Detector circuit

Table 9-234. TEST #97 Modem Pool Conference Test

Error Code	Test Result	Description/ Recommendation
	ABORT	System resources required for this test are not available.
1000	ABORT	System resources required to run this test are not available. The port may be in use on a valid call. Determine whether the port is available for testing.
1002	ABORT	The system could not allocate time slots for the test. The system may be under heavy traffic conditions or it may have time slots out-of-service due to TDM-BUS errors. Refer to TDM-BUS (TDM Bus) Maintenance documentation to diagnose any active TDM Bus errors. 1. If the system has no TDM-BUS errors and is not handling heavy traffic, repeat test at 1-minute intervals a maximum of 5 times. 2. If the test continues to abort, escalate the problem.
1003	ABORT	The system could not allocate a tone receiver for the test. The system may be oversized for the number of Tone Detectors present or some Tone Detectors may be out-of-service. 1. Look for TTR-LEV errors int he Error Log. If present, refer to TTR-LEV (TTR level) Maintenance documentation. 2. Look for TONE-PT errors in the Error Log. If present, refer to TONE-PT (Tone generator) Maintenance documentation. 3. If neither condition exists, retry the test at 1-minute intervals a maximum of 5 times. 4. If the test continues to abort, escalate the problem.

Continued on next page

Table 9-234. TEST #97 Modem Pool Conference Test — *Continued*

Error Code	Test Result	Description/ Recommendation
1004	ABORT	The port has been seized by a user for a valid call. Determine whether the port is available for testing. 1. Retry the command at 1-minute intervals a maximum of 5 times. 2. If the test continues to abort, escalate the problem.
1020	ABORT	The test did not run due to a previously existing error on the specific port or because of a more general circuit pack error. 1. Examine the Hardware Error Log for existing errors against this port or the circuit pack, and attempt to diagnose the previously existing errors.
2000	ABORT	The response to the test request was not received within the allowable time period.
2012	ABORT	Internal system error.
2100	ABORT	System resources required for this test are not available.
2103	ABORT	The system could not make the conference connection for the test. 1. Retry the command at 1-minute intervals a maximum of 5 times. 2. If the test continues to abort, escalate the problem.

Continued on next page

Table 9-234. TEST #97 Modem Pool Conference Test — *Continued*

Error Code	Test Result	Description/ Recommendation
4000	ABORT	System resources needed to complete the test could not be allocated. Ordinarily, this means the conversion resource or other hardware used during the test was in use. 1. Wait 1 minute and attempt the test again. 2. If the same error occurs, use the **status port** command to determine whether the Modem Pool conversion resource is in use. 3. If the conversion resource is in use, and it is absolutely necessary to test it, the call will have to be dropped by issuing a **busyout port UUCSS** command against the conversion resource. Run the test again. 4. If the same error occurs while the conversion resource is idle, busyout both Modem Pool conversion resources on the TN758 Pooled Modem circuit pack containing the conversion resource under test. Run the test again. 5. If the test continues to abort, replace the Pooled Modem circuit pack and retest. 6. If the test continues to abort with this error code after circuit pack replacement, escalate the problem.
65515	ABORT	System resources required for this test are not available. 1. Retry the command at 1-minute intervals a maximum of 5 times. 2. Issue the **test port long** command on the port on which the test aborted. If any test aborted or failed, follow recommended maintenance strategy for the appropriate port type (for example, ANL-LINE, DIG-LINE). 3. If the test continues to abort, escalate the problem.

Continued on next page

Table 9-234. TEST #97 Modem Pool Conference Test — *Continued*

Error Code	Test Result	Description/ Recommendation
None	FAIL	The test failed. This error is internal to the Pooled Modem circuit pack and does not involve external equipment or interfaces. 1. Busy-out both of the TN758 Pooled Modem conversion resources on the circuit pack containing the failing conversion resource. 2. If the test continues to fail, replace the Pooled Modem circuit pack and retest. 3. If the circuit pack fails after replacement, escalate the problem.
Any	FAIL	The Network Processing Element (NPE) of the tested port did not conference the tones correctly. This will cause noisy and unreliable connections. 1. If the remaining ports are currently not in use (the yellow LED is off), reset the circuit pack and repeat the test. 2. If the test fails again, replace the circuit pack.
	PASS	The port can correctly conference multiple connections. User-reported troubles on this port should be investigated using other port tests and by examining station, trunk, or external wiring.

Modem Pool Conversion Resource Loop-Around Test (#98)

The Modem Pool Conversion Resource Loop Around Test is set up as follows:

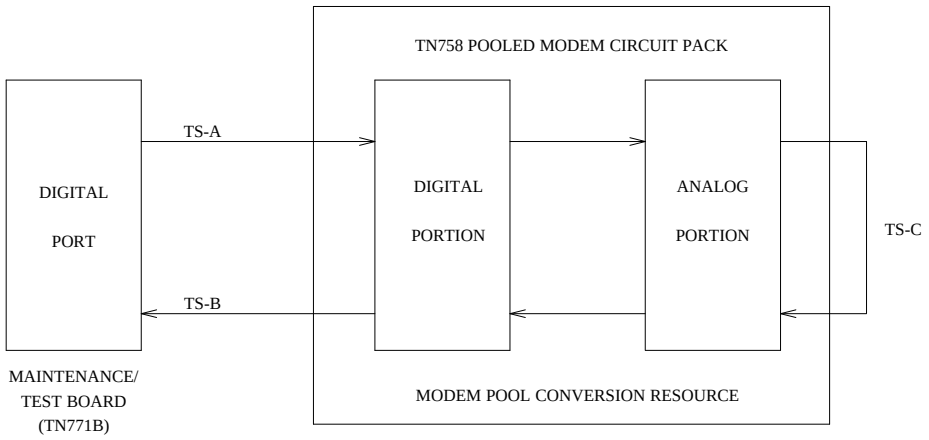

Figure 9-67. Modem Pool Conversion Resource Loop-Around

Test data patterns are transmitted from a Maintenance/Test Board digital port over network time slot A through the digital port on the conversion resource, looped around through the analog port via time slot C back to the Maintenance/Test Board digital port circuit via time slot B where the patterns are checked for accuracy. Finally, the test forces a disconnect by breaking the connection between the Maintenance/Test Board digital port and the Modem Pool Port (time slot A) and verifying that the Maintenance/Test Board digital port and Modem Pool Port go on-hook within the proper time.This test attempts to allocate a Maintenance/Test Board digital port, Modem Pool Port, and other internal resources. If any of these allocation attempts fail, the test cannot be completed and a specific abort error is reported

Table 9-235. TEST #98 Modem Pool Conversion Resource Loop Around Test

Error Code	Test Result	Description/ Recommendation
1000	ABORT	System resources needed to complete the test could not be allocated for the digital section of the Modem Pool conversion resource. Ordinarily, this means the conversion resource or other hardware used during the test was in use. 1. Wait 1 minute and attempt the test again. 2. If the conversion resource is in use, and it is absolutely necessary to test it, the call will have to be dropped by issuing a **busyout port UUCSSpp** command against the conversion resource. Run the test again. If the test passes, release the port. 3. If the same error occurs while the conversion resource is idle, busy out both Modem Pool conversion resources on the TN758 Pooled Modem circuit pack containing the conversion resource under test. Rerun the test. 4. If the test continues to abort, replace the Pooled Modem circuit pack and retest. 5. If the test continues to abort with this error code after circuit pack replacement, escalate the problem.

Continued on next page

Table 9-235. TEST #98 Modem Pool Conversion Resource Loop Around Test — *Continued*

Error Code	Test Result	Description/ Recommendation
1180	ABORT	A Maintenance/Test Board digital port could not be allocated for this test. This error is more closely related to the digital port on the specific Maintenance/Test Board circuit pack used for this test than the TN758 Pooled Modem circuit pack itself. Therefore, any hardware testing or replacement activities will focus on the Maintenance/Test Board circuit pack. Verify that the digital ports of the Maintenance/Test Board are present if this error occurs. 1. Use the **list config** command to verify that both of the Maintenance/Test Board digital ports are present. The display should show entries for both port 02 and port 03. 2. If the digital ports (02 and 03) are not present, refer to the M/T-BD Maintenance documentation. 3. If the digital ports are present, retry the command at 1 minute intervals a maximum of 5 times. 4. If test continues to abort, escalate the problem.
1181	ABORT	No time-slots available to connect digital ports for the test. 1. Retry the command at 1 minute intervals a maximum of 5 times. 2. If the test continues to abort, escalate the problem.
1182	ABORT	Internal System Error. Failed to connect the digital ports with time-slots. 1. Retry the command at 1 minute intervals a maximum of 5 times. 2. If the test continues to abort, escalate the problem.

Continued on next page

Table 9-235. TEST #98 Modem Pool Conversion Resource Loop Around Test — *Continued*

Error Code	Test Result	Description/ Recommendation
1340	ABORT	No Maintenance/Test digital port is currently available to perform this test. 1. Use **list config** to determine whether any Maintenance/Test digital ports (ports 02 and 03 on the Maintenance/Test circuit pack) are present in the system. Because at least one Maintenance/Test circuit pack must always be present in the PPN of any G3r system, there should be at least two such ports present. If the ports are present, proceed to step 2. Otherwise, determine why no ports appear in the **list config** display. Refer to M/T-DIG and M/T-BD maintenance documentation. 2. Look for M/T-DIG errors in the Error Log. If present, refer to M/T-DIG maintenance documentation. 3. If the ports are present and no errors are logged against them, retry the command at 1 minute intervals a maximum of 5 times. 4. If the test continues to abort, replace the Maintenance/Test circuit pack. 5. If test still aborts after replacement, escalate the problem.
2004	ABORT	Off-Hook was not received from the Pooled Modem. 1. Busy-out the digital port being tested on the Pooled Modem circuit pack. Retry the command at 1 minute intervals a maximum of 5 times. 2. If the test still aborts, replace the circuit pack. 3. If the test continues to abort, escalate the problem.

Continued on next page

Table 9-235. TEST #98 Modem Pool Conversion Resource Loop Around Test — *Continued*

Error Code	Test Result	Description/ Recommendation
2005	ABORT	The Maintenance/Test Board digital port and the Pooled Modem Board digital port failed to handshake. 1. Look for M/T-DIG errors in the Error Log. If present, refer to M/T-BD (Maintenance/Test Circuit Pack) Maintenance documentation. 2. Retry the command at 1 minute intervals a maximum of 5 times. 3. If the test still aborts, replace the Pooled Modem circuit pack. 4. If the test continues to abort, escalate the problem.
2312	ABORT	The Loop Around Test did not complete, failed to receive loop-back data. 1. Check for M/T-DIG error in the Error Log. If present, refer to the M/T-DIG section. 2. Retry the test, if still aborts, replace the Pooled Modem Board. 3. If the test continues to abort, escalate the problem.
2313	ABORT	The Maintenance/Test Board digital port allocated for this test did not respond to downlinked message. 1. Look for M/T-DIG errors in the Error Log. If present, refer to the M/T-DIG section. 2. Retry the command at 1 minute intervals a maximum of 5 times. 3. If the test continues to abort, replace the MTB. 4. If the test continues to abort, escalate the problem.

Continued on next page

Table 9-235. TEST #98 Modem Pool Conversion Resource Loop Around Test — *Continued*

Error Code	Test Result	Description/ Recommendation
2314	ABORT	The Modem Pool digital port did not respond to downlinked message. This error is internal to the Modem Pool circuit pack and does not involve external equipment or interfaces. 1. Busy-out the TN758 Pooled Modem conversion resources on the circuit pack. 2. If the test continues to abort, replace the Pooled Modem circuit pack and retest. 3. If the circuit pack fails after replacement, escalate the problem.
2500	ABORT	Internal System Error. 1. Retry the command at 1 minute intervals a maximum of 5 times. 2. If the error occurs again, escalate the problem.
2323	ABORT	The Maintenance Test circuit pack digital port allocated for this test did not disconnect properly. This error is more closely related to the Maintenance Test circuit pack digital port used for this test than the TN758 Pooled Modem circuit pack itself. Therefore, any hardware testing or replacement activities will focus on the Maintenance Test circuit pack. 1. Wait 1 minute and attempt the test again. 2. If the same error persists after 5 attempts at 1 minute intervals, escalate the problem.
2324	ABORT	The digital portion of the tested Modem Pool port did not disconnect properly. 1. Wait 1 minute and attempt the test again. 2. If the test continues to abort, replace the Pooled Modem circuit pack and retest. 3. If the test continues to abort with this error code after circuit pack replacement, escalate the problem.

Continued on next page

Table 9-235. TEST #98 Modem Pool Conversion Resource Loop Around Test — *Continued*

Error Code	Test Result	Description/ Recommendation
2325	FAIL	The Modem Pool port did not respond with an on-hook message when the connection to the TN711 Maintenance/Test digital port was broken, indicating a likely problem with the TN758 Pooled Modem circuit pack. 1. Busy-out both of the TN758 Pooled Modem conversion resources on the circuit pack containing the failing conversion resource. 2. If the test continues to fail, replace the Pooled Modem circuit pack and retest. 3. If the circuit pack fails after replacement, escalate the problem.
	FAIL	The Loop Around Test failed, the loop-back data did not match the original data. 1. Look for M/T-DIG errors in the Error Log. If present, refer to the M/T-DIG section. 2. Repeat Test #98. 3. If the test fails again, replace the Pooled Modem circuit pack.
	PASS	The port can correctly transmit/receive data.

Modem Pool Audit Test (#99)

This audit updates the Modem Pool conversion resource status contained in the TN758 Pooled Modem circuit pack's microprocessor. It does not actually test the Pooled Modem circuit pack; therefore, there are no FAIL codes. The audit can only be performed on idle conversion resources. If the conversion resource is in use, the audit will abort

Table 9-236. TEST #99 Modem Pool Audit Test

Error Code	Test Result	Description/ Recommendation
None	ABORT	The system was not able to allocate all the necessary resources to execute this test. An ABORT simply indicates that the conversion resource was in use when the audit was performed. No repair action is necessary unless the conversion resource was known to be idle during the test (yellow in-use LED was off) or was busied out before the test was run. In that case, a TN758 failure condition may exist and the following procedure should be used: 1. Busyout both of the TN758 Pooled Modem conversion resources on the circuit pack containing the failing conversion resource. 2. If the test continues to abort, replace the Pooled Modem circuit pack and retest. 3. If the circuit pack fails after replacement, escalate the problem.

M/T-ANL (Maintenance/Test Analog Port)

MO Name As It Appears in Alarm Log	Alarm Level	Initial System Technician Command to Run (a)	Full Name of MO
M/T-ANL	Minor	test port UUCSSpp l	Maintenance/Test Analog Port
M/T-ANL	Warning	release port UUCSSpp	Maintenance/Test Analog Port

a. *UU* is the universal cabinet number (1 for PPN, 2 - 44 for EPNs). *C* is the carrier designation (A, B, C, D, or E). *SS* is the number of the slot in which the circuit pack resides (01 to 21). *pp* is the two digit port number (01, 02, ...).

The Maintenance/Test Analog Port is port number 1 on the TN771 Maintenance/Test circuit pack. This port is used by the Automatic Transmission Measurement System (ATMS) as an Originating Test Line (OTL) or Terminating Test Line (TTL) for test calls over analog trunks. For more details, see "Automatic Transmission Measurement System (ATMS)" in Chapter 6, "Additional Maintenance Procedures". Figure 9-68 on the next page shows a typical ATMS configuration.

M/T-ANL maintenance ensures that the analog trunk's testing function is operating correctly. An alarm against M/T-ANL can reduce service, but it will not block it. To accurately measure performance and health of analog trunks, the TN711 should be replaced when a new circuit pack is available.

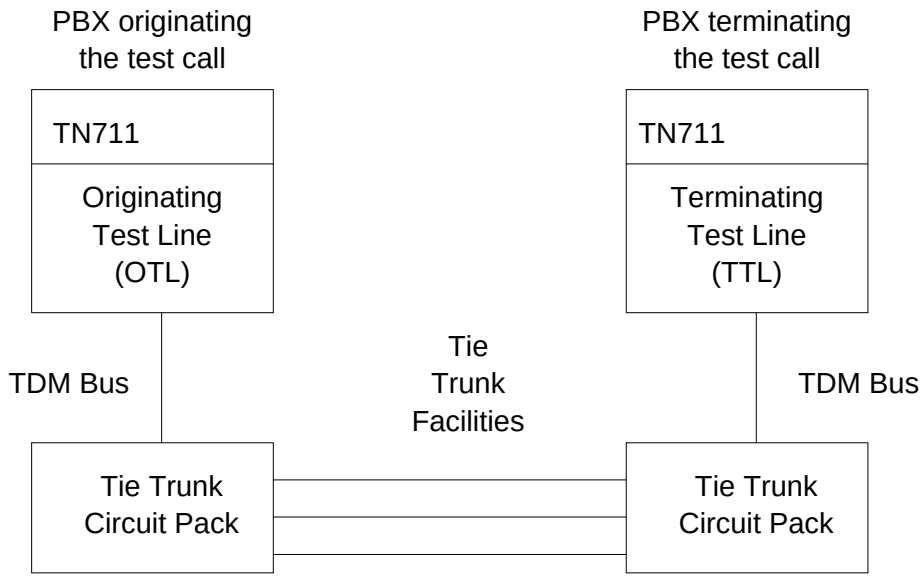

Figure 9-68. ATMS Tie Trunk Test Call

Hardware Error Log Entries and Test to Clear Values

M/T-ANL Error Log Entries					
Error Type	**Aux Data**	**Associated Test**	**Alarm Level**	**On/Off Board**	**Test to Clear Value**
0* (a)	0	Any	Any	Any	test port UUCSSpp
1 (b)	41018	none	MINOR	ON	test port UUCSSpp l r 3
18	0	busyout port UUCSSpp	WARNING	OFF	release port UUCSSpp
257	Any	NPE Crosstalk test (#9)	MINOR	ON	test port UUCSSpp l r 3
513	Any	Analog Port Sanity Test (#963)	MINOR	ON	test port UUCSS01 r 2
769	Any	Analog Port Digital Loop Around Test (#13)	MINOR	ON	test port UUCSSpp r 3
3840(c)	Any	Hook State Inquiry test (#566)			

* Run the Short Test Sequence first. If all tests pass, run the Long Test Sequence. Refer to the appropriate test description and follow the recommended procedures.

Notes:

a. This error code appears in the Error Log only if the MTB circuit pack has been removed since the Error Log was last cleared. Verify that the circuit pack has been reinserted.

b. This error indicates a hardware failure on the Analog Port circuitry. Replace the Maintenance/Test circuit pack if the alarm is not resolved by the command above.

c. This error indicates that call processing records did not agree with on-board records for the hook state (on-/off-hook) of the Maintenance/Test Analog Port. This error is not service-affecting and no action is required.

System Technician-Demanded Tests: Descriptions and Error Codes

Always investigate tests in the order presented in the following tables when inspecting errors in the system. By clearing error codes associated with the *Analog Port Sanity Test*, for example, you may also clear errors generated from other tests in the testing sequence.

Order of Investigation	Short Test Sequence	Long Test Sequence	D/ND*
Analog Port Sanity Test (#963)	X	X	ND
Digital Loop Around Test (#13)	X	X	ND
NPE Crosstalk Test (#9)		X	ND
Hook State Inquiry (#566)	X	X	ND
Clear Error Counters (#270)		X	ND

* D = Destructive; ND = Nondestructive

NPE Crosstalk Test (#9)

The NPE Crosstalk Test verifies that this port's NPE channel talks on the selected time slot and never crosses over to time slots reserved for other connections.

One or more Network Processing Elements (NPE) reside on each circuit pack with a TDM Bus interface. The NPE controls port connectivity, gain, and provides conferencing functions on a per port basis. If the NPE is not working correctly, one way and/or noisy connections may be observed. This test is part of a port's long test sequence and takes approximately 10 to 20 seconds to complete

Table 9-237. TEST #9 NPE Cross Talk Test

Error Code	Test Result	Description/ Recommendation
1000	ABORT	System resources required to run this test are not available. The port may be in use on a valid ATMS trunk test call. 1. Retry the command at 1 minute intervals a maximum of 3 times. 2. If the test continues to abort and the port is not in use, escalate the problem.
1001	ABORT	System resources required to run this test are not available. 1. Retry the command at 1 minute intervals a maximum of 3 times. 2. If the test continues to abort, escalate the problem.
1002	ABORT	The system could not allocate time slots for the test. The system may be under heavy traffic conditions or it may have time slots out of service due to TDM-BUS errors. Refer to TDM-BUS Maintenance documentation to diagnose any active TDM-BUS errors. A system is considered under heavy traffic when the Call Processing Occupancy is greater than 50% or when the System Management and the Call Processing Occupancies together exceed 65%. To view the system occupancy measurements enter the command **status system health** on the system technician terminal. 1. If system has no TDM-BUS errors and is not handling heavy traffic, repeat test at 1 minute intervals a maximum of 3 times. 2. If the test continues to abort, escalate the problem.

Continued on next page

Table 9-237. TEST #9 NPE Cross Talk Test — *Continued*

Error Code	Test Result	Description/ Recommendation
1003	ABORT	The system could not allocate a tone receiver for the test. The system may be oversized for the number of tone detectors present or some tone detectors may be out-of-service. 1. Look for TTR-LEV errors in the Error Log. If present, refer to TTR-LEV Maintenance documentation. 2. Look for TONE-PT errors in the Error Log. If present, refer to TONE-PT Maintenance documentation. 3. If neither condition exists, retry the test at 1 minute intervals a maximum of 3 times. 4. If the test continues to abort, escalate the problem.
1004	ABORT	The port has been seized by a valid ATMS test call. 1. Retry the command at 1 minute intervals a maximum of 3 times. 2. If the test continues to abort and the port is not in use on a valid ATMS Test Call, escalate the problem. To determine whether the port is in use by an ATMS Test Call enter **status station ext** where **ext** is the assigned ATMS station number.
2000	ABORT	Response to the test request was not received within the allowable time period. 1. Retry the command at 1 minute intervals a maximum of 3 times. 2. If the test continues to abort, escalate the problem.
2100	ABORT	System resources required to run this test are not available. 1. Retry the command at 1 minute intervals a maximum of 3 times. 2. If the test continues to abort, escalate the problem.

Continued on next page

Table 9-237. TEST #9 NPE Cross Talk Test — *Continued*

Error Code	Test Result	Description/ Recommendation
Any	FAIL	The NPE of the tested port was found to be transmitting in error. This will cause noisy and unreliable connections. 1. If the remaining ports are currently not in use (yellow LED is off), try to reset the circuit pack via the **busyout board UUCSS**, **reset board UUCSS**, **release board UUCSS** command sequence. Then repeat the test. 2. If the test fails again, replace circuit pack.
	PASS	The port is correctly using its allocated time slots. User-reported troubles on this port should be investigated by examining station, trunk, or external wiring.

Analog Port Digital Loop Around Test (#13)

This test is a modification of the Voice and Control Channel Local Loop Test used by Digital Station (DIG-LINE) maintenance. This test does not perform the control channel and secondary information channel loop around tests as described for DIG-LINE, as these data paths do not exist for the Maintenance/Test Analog Port. The primary information channel is tested by first looping back the data channel onto the TDM Bus, and then sending a digital count from the Tone-Clock circuit pack and receiving the same digital count with a general purpose tone detector. A conference test is done next for the primary information channel. This test is the same as Conference Test (#6).

Only one value (Pass, Fail, or Abort) is generated as a result of the two tests. If either fails or aborts, the sequence is stopped

Table 9-238. TEST #13 Analog Port Digital Loop Around Test

Error Code	Test Result	Description/ Recommendation
	ABORT	Internal System Error 1. Retry the command at 1 minute intervals a maximum of 3 times. 2. If the test continues to abort, escalate the problem.
1000	ABORT	The port is in use on a valid ATMS Test Call. 1. Retry the command at 1 minute intervals a maximum of 3 times. 2. If the test continues to abort and the port is not in use on a valid ATMS Test Call, escalate the problem. To determine whether the port is in use by an ATMS Test Call enter **status station ext** where **ext** is the assigned ATMS station number.
1001	ABORT	System resources required to run this test are not available. 1. Retry the command at 1 minute intervals a maximum of 3 times. 2. If the test continues to abort, escalate the problem.

Continued on next page

Table 9-238. TEST #13 Analog Port Digital Loop Around Test — *Continued*

Error Code	Test Result	Description/ Recommendation
1002	ABORT	The system could not allocate time slots for the test. The system may be under heavy traffic conditions, or it may have time slots out-of-service due to TDM-BUS errors. Refer to TDM-BUS Maintenance to diagnose any active TDM-BUS errors. A system is considered under heavy traffic when the Call Processing Occupancy is greater than 50% or when the System Management and the Call Processing Occupancies together exceed 65%. To view the system occupancy measurements enter the command **status system health** on the system technician terminal. 1. If the system has no TDM-BUS errors and is not handling heavy traffic, repeat the test at 1 minute intervals a maximum of 3 times. 2. If the test continues to abort, escalate the problem.
1003	ABORT	The system could not allocate a tone receiver for the test. The system may be oversized for the number of tone detectors present, or some tone detectors may be out-of-service. 1. Look for TTR-LEV errors in the Error Log. If present, refer to TTR-LEV Maintenance documentation. 2. Look for TONE-PT errors in the Error Log. If present, refer to TONE-PT Maintenance documentation. 3. If neither condition exists, retry the command at 1 minute intervals a maximum of 3 times. 4. If the test continues to abort, escalate the problem.
1004	ABORT	The port was seized by a valid ATMS Test Call. 1. Retry the command at 1 minute intervals a maximum of 3 times. 2. If the test continues to abort and the port is not in use on a valid ATMS Test Call, escalate the problem. To determine whether the port is in use by an ATMS Test Call enter **status station ext** where **ext** is the assigned ATMS station number.

Continued on next page

Table 9-238. TEST #13 Analog Port Digital Loop Around Test — *Continued*

Error Code	Test Result	Description/ Recommendation
2000	ABORT	Response to the test request was not received within the allowable time period. 1. Retry the command at 1 minute intervals a maximum of 3 times. 2. If the test continues to abort, escalate the problem.
7	FAIL	Conference test failed on the primary information channel. 1. Run the circuit pack tests to check the Tone/Clock (TONE-BD) circuit pack and the Tone Detector circuit pack via the **test board UUCSS** command. 2. Resolve any problems that are detected on the Tone/Clock (TONE-BD) circuit pack or Tone Detector circuit pack. See the section on Tone Generator circuit pack. 3. If the Tone/Clock and Tone Detector circuit packs are functioning properly, and the test still fails, replace the Maintenance/Test circuit pack.
14	FAIL	The primary information channel is not transmitting properly. User may not notice any interruption in service or may not be able to use this port. 1. Run the circuit pack tests to check the Tone Generator circuit pack and the Tone Detector circuit pack using **test board UUCSS**. 2. Resolve any problems that are detected on the Tone Generator circuit pack or Tone Detector circuit pack. See the section on Tone Generator circuit pack. 3. If the Tone Generator and Tone Detector circuit packs are functioning properly, and the test still fails, replace the Maintenance/Test Circuit Pack.
	PASS	The Maintenance/Test Analog Port analog trunk testing capability is operating correctly.

Clear Error Counters (#270)

The ports on the Maintenance/Test circuit pack continually run self-tests, whenever the port is idle. The Angel uses a counter so that the Background Maintenance Failure message is only sent uplink once (this keeps a failed port/circuit pack from flooding the SPE with a string of messages). Many circuit packs have counters in the Angel firmware. These counters are used so that Control Channel Message Set (CCMS) messages are not continuously sent uplink. Using this method, the message will be sent once, when the counter reaches some preset threshold, and then not sent again until the counter is cleared. This test is used to clear the counter, so that if the port continues to fail during or after SPE-demanded testing, the Angel will send a message to indicate that fact.

This test is only used to send a message to the Angel on the Maintenance/Test Circuit Pack. Therefore, this test should never abort or fail.

Table 9-239. TEST #270 Clear Error Counters

Error Code	Test Result	Description/ Recommendation
	PASS	The message to clear the Maintenance/Test circuit pack's counter for Background Maintenance Failures has been sent.

Hook State Inquiry (#566)

This test ensures that the Maintenance/Test Analog Port maintenance software and call processing agree on the on-/off-hook status of the Maintenance/Test Analog Port.

Table 9-240. TEST #566 Hook State Inquiry

Error Code	Test Result	Description/ Recommendation
1	ABORT	Switch hook audit timed out. No response was received from the circuit pack for information about the switch hook state. 1. Retry the command at 1 minute intervals a maximum of 3 times. 2. If the test continues to abort, replace the circuit pack and repeat the test. 3. If the test continues to abort, escalate the problem.
2100	ABORT	System resources required to run this test are not available. 1. Retry the command at 1 minute intervals a maximum of 3 times. 2. If the test continues to abort, escalate the problem.
Any	FAIL	Internal System Error 1. Retry the command at 1 minute intervals a maximum of 3 times. 2. If the test continues to fail reset the circuit pack via the **busyout board UUCSS**, **reset board UUCSS**, **release board UUCSS** command sequence. 3. Retry the command at 1 minute intervals a maximum of 3 times. 4. If the test continues to fail, escalate the problem.
	PASS	Call processing and Maintenance/Test Analog Port maintenance software agree on the Maintenance/Test Analog Port hook state.

Analog Port Sanity Test (#963)

This test verifies that the port circuitry involved in the analog trunk testing on the Maintenance/Test Analog Port is functioning properly.

This test will abort if an ATMS Test Call is in progress on the Maintenance/Test Analog Port when the test is requested.

Table 9-241. TEST #963 Analog Port Sanity Test

Error Code	Test Result	Description/ Recommendation
2000	ABORT	Response to the test request was not received within the allowable time period.
2100	ABORT	System resources required to run this test are not available.
2500	ABORT	An internal operation failed; the test could not be completed. 1. Retry the command at 1 minute intervals a maximum of 3 times. 2. If the test continues to fail, escalate the problem.
50	FAIL	The switch was unable to communicate with the port circuitry used for analog trunk testing. 1. Reset the circuit pack via the **busyout board UUCSS**, **reset board UUCSS**, **release board UUCSS** command sequence. 2. Test the port again via the **test port UUCSS01 l** command. 3. If the test fails again, replace the circuit pack.
	PASS	The Maintenance/Test Analog Port analog trunk testing capability is operating correctly.

M/T-BD (Maintenance/Test Circuit Pack)

MO Name As It Appears in Alarm Log	Alarm Level	Initial System Technician Command to Run (a)	Full Name of MO
M/T-BD	MIN	test board UUCSS l	Maintenance/Test Circuit Pack
M/T-BD	WRN	release board UUCSS	Maintenance/Test Circuit Pack

a. UU is the universal cabinet number (1 for PPN, 2 - 44 for EPNs). C is the carrier designation (A, B, C, D, or E). SS is the number of the slot in which the circuit pack resides (01 to 21).

The Maintenance/Test Circuit Pack supports Packet Bus fault detection and bus reconfiguration for the port network in which it is installed. The circuit pack also provides Analog Trunk testing, and data loopback testing of DCP Mode 2 endpoints and Digital (ISDN) Trunk Facilities via the TDM bus.

Port 1 of the Maintenance/Test board is the Analog Test port which provides the Analog Trunk testing function for Automatic Transmission Measurement System (ATMS). ATMS is a feature in which calls are made from a device called an Originating Test Line (OTL) over a specific trunk to a device called a Terminating Test Line (TTL). The OTL and TTL can then send tones over the trunk under test and determine the quality of the connection. Ports 2 and 3 are the Digital ports which provide the Digital (ISDN) Trunk testing functions. Port 4 is the Packet port which provides the Packet Bus maintenance function.

Refer to XXX-BD (Common Port Circuit Pack) Maintenance documentation for circuit pack level errors. See also M/T-ANA (Maintenance/Test Analog Test Port), M/T-DIG (Maintenance/Test Digital Port) and M/T-PKT (Maintenance/Test Packet Bus Port) Maintenance documentation for related analog test port digital port and Packet Bus port information, respectively.

All ports except the Analog port (port 1) of the Maintenance/Test Board are automatically administered when the circuit pack is inserted into the system and they are removed when the circuit pack is unplugged from the system. The Analog port however, is administered via the station screen with the type "105TL" for an OTL or a TTL. This port remains administered even after the circuit pack is physically removed from the system. Care should be taken to remove the OTL or the TTL before unplugging the circuit pack.

Hardware Error Log Entries and Test to Clear Values

Maintenance/Test Board Error Log Entries					
Error Type	**Aux Data**	**Associated Test**	**Alarm Level†**	**On/Off Board**	**Test to Clear Value**
0*	0	Any	Any	Any	test port UUCSSpp sh r 1
1(a)	0	SAKI Sanity Test (#53)	MINOR	ON	See footnote a
18(b)	0	Busyout Board	WARNING	OFF	release board UUCSS
36(c)	0				
217(e)		WARNING	ON		
257(d)	0	CC Loop Test (#52)	MINOR	ON	test board UUCSS r3
267(e)		WARNING	ON		
513(f)	4352 to 4357				
769(g)	4358				
1025(h)	4363	NPE Audit Test (#50)			test board UUCSS l
1538(i)	0		MINOR	ON	
3840(j)	4096 to 4101				
3999 (k)	Any	None			

* Run the Short Test Sequence first. If all tests pass, run the Long Test Sequence. Refer to the appropriate test description and follow the recommended procedures.

† Major or Minor alarms on this MO may have been downgraded to Warning alarms based on the values used in the **set options** command.

Notes:

a. This error indicates that the circuit pack has stopped functioning. Reset the circuit pack via **busyout board UUCSS**, **reset board UUCSS**, and **release board UUCSS** commands. If the SAKI Sanity Test (#53) passes, then the on-board circuitry is healthy. If the SAKI Sanity Test (#53) fails, replace the circuit pack.

b. The circuit pack has been busied out via the **busyout board UUCSS** command. Execute **release board UUCSS** command.

c. A port processor on the circuit pack failed to initialize. Reset the circuit pack via **busyout board UUCSS**, **reset board UUCSS**, and **release board UUCSS**. if the problem does not go away, replace the circuit pack.

d. A Control Channel Protocol Error has occurred. This may be due to an on-board hardware failure detected by the circuit pack. Reset the circuit pack by executing **busyout board UUCSS** and **reset board UUCSS** commands. If there is a problem, it will be detected during initialization and will cause the circuit pack to lock up and appear insane to the system.

e. An extra TN771D circuit pack has been inserted into the port network.

f. An on-board hardware failure has been detected by the circuit pack. Reset the circuit pack via the **busyout board UUCSS**, **reset board UUCSS**, and **release board UUCSS** commands. If SAKI Sanity Test (#53) passes, the circuitry is healthy. If SAKI Sanity Test (#53) fails, replace the circuit pack.

g. This error is reported by the circuit pack when it detects a program logic error. While no action is required, this error may lead to errors of other types being reported against this circuit pack.

h. This error is reported by the circuit pack when it cannot update NPE memory and read it back. This error type can be ignored, but may lead to errors of other types being reported against this circuit pack.

i. Excessive number of messages have been received from the Maintenance/Test circuit pack. This may be due to a hardware problem on the circuit pack. The switch will take the board out of service and periodically put it back into service to see if the problem has disappeared. If the problem persists, replace the circuit pack.

j. This error is not service affecting. No action is required. This error is reported by the circuit pack when it receives a bad control channel message from the switch.

k. Error type 3999 indicates that the circuit pack sent a large number of control channel messages to the switch within a short period of time. If error type 1538 is also present, then the circuit pack was taken out-of-service due to hyperactivity. If error type 1538 is not present, then the circuit pack has not been taken out-of-service, but it has generated 50% of the messages necessary to be considered hyperactive. This may be completely normal during heavy traffic periods. However, if this error type is logged when the circuit pack is being lightly used, it may indicate a problem with the circuit pack or the equipment attached to it.

System Technician-Demanded Tests: Descriptions and Error Codes

Always investigate tests in the order presented in the table below when inspecting errors in the system. By clearing error codes associated with the *Control Channel Loop Around Test* for example, you may also clear errors generated from other tests in the testing sequence.

Order of Investigation	ShortTest Sequence	Long Test Sequence	D/ND*
Control Channel Loop-Around Test (#52)	X	X	ND
NPE Audit Test (#50)		X	ND

* D = Destructive; ND = Nondestructive

Repair procedures for the above tests are described in XXX-BD (Common Port Circuit Pack) Maintenance documentation section.

M/T-DIG (Maintenance/Test Digital Port)

MO Name As It Appears in Alarm Log	Alarm Level	Initial System Technician Command to Run (a)	Full Name of MO
M/T-DIG	Minor	test port UUCSSpp l	Maintenance/Test Digital Port
M/T-DIG	Warning	release port UUCSSpp	Maintenance/Test Digital Port

a. UU is the universal cabinet number (1 for PPN, 2 - 44 for EPNs). C is the carrier designation (A, B, C, D, or E). SS is the number of the slot in which the circuit pack resides (01 to 21). pp is the two digit port number (01, 02, ...).

The Maintenance/Test Digital Port is a port on the TN771D circuit pack. Ports 2 and 3 are Digital Ports. The Maintenance/Test Digital Port provides the ability to perform digital (i.e., ISDN-PRI) trunk testing via the TDM Bus. For an ISDN-PRI test call, connections are set up in the system as shown in Figure 9-69 on the following page.

When the Maintenance/Test Digital Port is participating in an ISDN-PRI test call, the port sends a stream of pseudo-random data along the connected B-channel. The far end loops back this data, and the Maintenance/Test Digital Port compares the data to that which was sent. Errors are recorded on a bit and block basis. Refer to ISDN-TRK (DS1 ISDN Trunk) Maintenance documentation for more information on ISDN-PRI test calls.

The Maintenance/Test Digital Port maintenance ensures that the digital trunk testing function is operating correctly. The Maintenance/Test Digital Port is alarmed if maintenance determines that the digital port is operating incorrectly.

NOTE:
An alarm on the Maintenance/Test Digital Port reduces service, but does not block it since the ISDN-TRK has other means to determine the health of the ISDN-PRI trunk facility. However, to accurately measure the error performance and to ensure accuracy of the health of the ISDN-PRI trunk, the Maintenance/Test circuit pack should be replaced when a new circuit pack is available.

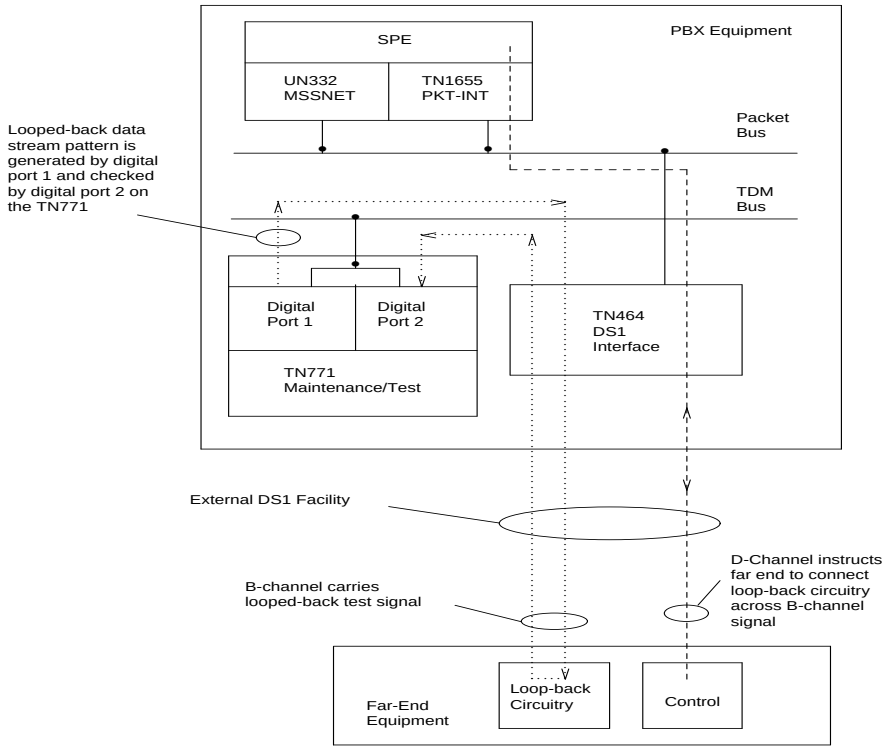

Figure 9-69. ISDN-PRI Outgoing Test Call

Hardware Error Log Entries and Test to Clear Values

M/T-DIG Error Log Entries					
Error Type	**Aux Data**	**Associated Test**	**Alarm Level**	**On/Off Board**	**Test to Clear Value**
0*	0	Any	Any	Any	test port UUCSSpp
1 (a)	41018	none	MINOR	ON	test port UUCSSpp l r 3
18 (b)	0	busy-out port UUCSSpp	WARNING	OFF	release port UUCSSpp
257 (c)	Any	NPE Crosstalk Test (#9)	MINOR	ON	test port UUCSSpp l r 3
513 (d)	Any	Digital Port Sanity Test (#565)	MINOR	ON	test port *UUCSS*02 r 2
769 (e)	Any	Digital Port Loop Around Test (#13)	MINOR	ON	test port UUCSSpp r 3
3840 (f)	Any	Hook State Inquiry test (#566)			

* Run the Short Test Sequence first. If all tests pass, run the Long Test Sequence. Refer to the appropriate test description and follow the recommended procedures.

Notes:

a. This error indicates a hardware failure on the Digital Port circuitry. Replace the Maintenance/Test circuit pack if the alarm is not resolved by the command above.

b. The port has been busied out via the **busy-out port UUCSSpp** command.

c. This error indicates that Maintenance/Test Digital Port is talking on more than just its assigned time slot. Replace the Maintenance/Test circuit pack.

d. This error indicates that the Maintenance/Test Digital Port has failed its self-test. Since the Digital Port Sanity Test runs only on port 2, but tests both ports 2 and 3, both ports will be alarmed when the test fails. Note that the command above indicates to test port 2, even if the error is logged against port 3.

e. This error indicates that the Maintenance/Test Digital Port has been unable to successfully loop data from a tone generator to a tone detector.

f. This error indicated that call processing records did not agree with on-board records for the hook state (on-/off-hook) of the Maintenance/Test Digital Port. This error is not service-affecting and no action is required.

System Technician-Demanded Tests: Descriptions and Error Codes

Always investigate tests in the order presented in the following tables when inspecting errors in the system. By clearing error codes associated with the *Digital Port Sanity Test*, for example, you may also clear errors generated from other tests in the testing sequence.

Order of Investigation	Short Test Sequence	Long Test Sequence	D/ND*
Digital Port Sanity Test (#565)	X	X	ND
Digital Port Loop Around Test (#13)	X	X	ND
NPE Crosstalk Test (#9)		X	ND
Hook State Inquiry (#566)	X	X	ND
Clear Error Counters (#270)		X	ND

* D = Destructive; ND = Nondestructive

NPE Crosstalk Test (#9)

This test is a modified version of the Digital Line NPE Crosstalk Test used by DIG-LINE maintenance.

One or more Network Processing Elements (NPE) reside on each circuit pack with a TDM Bus interface. The NPE controls port connectivity, gain, and provides conferencing functions on a per port basis. The NPE Crosstalk Test verifies that this port's NPE channel talks on the selected time slot and never crosses over to time slots reserved for other connections. If the NPE is not working correctly, one way and/or noisy connections may be observed. This test is part of a port's long test sequence and takes approximately 10 to 20 seconds to complete. This test is a modified version of the Digital Line NPE Crosstalk Test used by DIG-LINE maintenance

Table 9-242. TEST #9 NPE Cross Talk Test

Error Code	Test Result	Description/ Recommendation
1000	ABORT	System resources required to run this test are not available. The port may be in use on a valid ISDN-PRI test call. Use the **list isdn-testcall** command to determine if the port is in use (if the port is listed in the M/T Port column). If it is in use, either wait for the test call to complete (as indicated in the Start Time and Duration fields in the above display), or abort the test call with the **clear isdn-testcall grp/mem** command, where **grp/mem** is determined from the B-channel field of the above display. 1. Retry the command at 1-minute intervals a maximum of 5 times. 2. If the test continues to abort and the port is not in use, escalate the problem.
1001	ABORT	System resources required to run this test are not available. 1. Retry the command at 1-minute intervals a maximum of 5 times. 2. If the test continues to abort, escalate the problem.

Continued on next page

Table 9-242. TEST #9 NPE Cross Talk Test — *Continued*

Error Code	Test Result	Description/ Recommendation
1002	ABORT	The system could not allocate time slots for the test. The system may be under heavy traffic conditions or it may have time slots out of service due to TDM-BUS errors. Refer to TDM-BUS Maintenance documentation to diagnose any active TDM-BUS errors. 1. If system has no TDM-BUS errors and is not handling heavy traffic, repeat test at 1-minute intervals a maximum of 5 times. 2. If the test continues to abort, escalate the problem.
1003	ABORT	The system could not allocate a tone receiver for the test. The system may be oversized for the number of tone detectors present or some tone detectors may be out-of-service. 1. Look for TTR-LEV errors in the Error Log. If present, refer to TTR-LEV Maintenance documentation. 2. Look for TONE-PT errors in the Error Log. If present, refer to TONE-PT Maintenance documentation. 3. If neither condition exists, retry the test at 1-minute intervals a maximum of 5 times. 4. If the test continues to abort, escalate the problem.
1004	ABORT	The port has been seized by a valid ISDN-PRI test call. Use the **list isdn-testcall** command to determine which call is using the port (from the M/T Port column). Either wait for the test call to complete (as indicated in the Start Time and Duration fields of the above display), or abort the test call with the **clear isdn-testcall grp/mem** command, where grp/mem is determined form the B-channel field of the above display. 1. Retry the command at 1-minute intervals a maximum of 5 times. 2. If the test continues to abort and the port is not in use, escalate the problem.

Continued on next page

Table 9-242. TEST #9 NPE Cross Talk Test — *Continued*

Error Code	Test Result	Description/ Recommendation
2000	ABORT	Response to the test request was not received within the allowable time period.
2100	ABORT	System resources required to run this test are not available. 1. Retry the command at 1-minute intervals a maximum of 5 times. 2. If the test continues to abort, escalate the problem.
Any	FAIL	The NPE of the tested port was found to be transmitting in error. This will cause noisy and unreliable connections. 1. If the remaining ports are currently not in use (yellow LED is off), try to reset the circuit pack. Then repeat the test. 2. If the test fails again, replace circuit pack.
	PASS	The port is correctly using its allocated time slots. User-reported troubles on this port should be investigated using other port tests and by examining station, trunk, or external wiring.

Digital Port Loop Around Test (#13)

This test is a modification of the Voice and Control Channel Local Loop Test used by Digital Station (DIG-LINE) maintenance. This test does not perform the control channel and secondary information channel loop around tests as described for DIG-LINE, as these data paths do not exist for the Maintenance/Test Digital Port. The primary information channel is tested by first looping back the data channel onto the TDM Bus, and then sending a digital count from the Tone-Clock circuit pack and receiving the same digital count with a general purpose tone detector. A conference test is done next for the primary information channel. This test is the same as Conference Test (#6).

Only one value (Pass, Fail, or Abort) is generated as a result of the two tests. If either fails or aborts, the sequence is stopped

Table 9-243. TEST #13 Digital Port Loop Around Test

Error Code	Test Result	Description/ Recommendation
	ABORT	Internal System Error 1. Retry the command at 1-minute intervals a maximum of 5 times. 2. If the test continues to abort, escalate the problem.
1000	ABORT	The port is use on a valid ISDN-PRI Test Call. Use the **list isdn-testcall** command to determine which call is using the port (from the M/T Port column). Either wait for the test call to complete (as indicated in the Start Time and Duration fields in the above display), or abort the test call with the **clear isdn-testcall grp/mem** command, where grp/mem is determined from the B-channel field of the above display. 1. Retry the command at 1-minute intervals a maximum of 5 times. 2. If the test continues to abort and the port is not in use, escalate the problem.
1001	ABORT	System resources required to run this test are not available. 1. Retry the command at 1-minute intervals a maximum of 5 times. 2. If the test continues to abort, escalate the problem.

Continued on next page

Table 9-243. TEST #13 Digital Port Loop Around Test — *Continued*

Error Code	Test Result	Description/ Recommendation
1002	ABORT	The system could not allocate time slots for the test. The system may be under heavy traffic conditions, or it may have time slots out-of-service due to TDM-BUS errors. Refer to TDM-BUS Maintenance to diagnose any active TDM-BUS errors. 1. If the system has no TDM-BUS errors and is not handling heavy traffic, repeat the test at 1-minute intervals a maximum of 5 times. 2. If the test continues to abort, escalate the problem.
1003	ABORT	The system could not allocate a tone receiver for the test. The system may be oversized for the number of tone detectors present, or some tone detectors may be out-of-service. 1. Look for TTR-LEV errors in the Error Log. If present, refer to TTR-LEV Maintenance documentation. 2. Look for TONE-PT errors in the Error Log. If present, refer to TONE-PT Maintenance documentation. 3. If neither condition exists, retry the command at 1-minute intervals a maximum of 5 times. 4. If the test continues to abort, escalate the problem.
1004	ABORT	The port was seized by a valid ISDN-PRI Test Call. Use the **list isdn-testcall** command to determine which call is using the port (from the M/T Port column). Either wait for the test call to complete (as indicated in the Start Time and Duration fields of the above display), or abort the test call with the **clear isdn-testcall grp/mem** command, where grp/mem is determined from the B-channel field of the above display. 1. Retry the command at 1-minute intervals a maximum of 5 times. 2. If the test continues to abort and the port is not in use, escalate the problem.

Continued on next page

Table 9-243. TEST #13 Digital Port Loop Around Test — *Continued*

Error Code	Test Result	Description/ Recommendation
2000	ABORT	Response to the test request was not received within the allowable time period. 1. Retry the command at 1-minute intervals a maximum of 5 times. 2. If the test continues to abort, escalate the problem.
2100	ABORT	System resources required to run this test are not available. 1. Retry the test at 1-minute intervals a maximum of 5 times. 2. If the test continues to abort, escalate the problem.
7	FAIL	Conference test failed on the primary information channel. In most cases, the user may not notice a disruption in service. 1. Run the circuit pack tests to check the Tone Generator circuit pack and the Tone Detector circuit pack via the **test board UUCSS** command. 2. Resolve any problems that are detected on the Tone Generator circuit pack or Tone Detector circuit pack. 3. If the Tone Generator and Tone Detector circuit packs are functioning properly, and the test still fails, replace the Maintenance/Test circuit pack.
14	FAIL	The primary information channel is not transmitting properly. User impact may range from nothing to not being able to use this port. 1. Run the circuit pack tests to check the Tone Generator circuit pack and the Tone Detector circuit pack using **test board UUCSS**. 2. Resolve any problems that are detected on the Tone Generator circuit pack or Tone Detector circuit pack. 3. If the Tone Generator and Tone Detector circuit packs are functioning properly, and the test still fails, replace the Maintenance/Test Circuit Pack.
	PASS	The Maintenance/Test Digital Port digital trunk testing capability is operating correctly.

Clear Error Counters (#270)

This test is not an actual test in the strict sense of the word. Many circuit packs have counters in the Angel firmware. These counters are used so that Control Channel Message Set (CCMS) messages are not continuously sent uplink. Using this method, the message will be sent once, when the counter reaches some preset threshold, and then not sent again until the counter is cleared.

The ports on the Maintenance/Test circuit pack continually run self-tests, whenever the port is idle. The Angel uses a counter so that the Background Maintenance Failure message is only sent uplink once (this keeps a failed port/circuit pack from flooding the SPE with a string of messages). This test is used to clear the counter, so that if the port continues to fail during or after SPE-demanded testing, the Angel will send a message to indicate that fact.

This test is only used to send a message to the Angel on the Maintenance/Test Circuit Pack. Therefore, this test should never abort or fail.

Table 9-244. TEST #270 Clear Error Counters

Error Code	Test Result	Description/ Recommendation
Any	ABORT	This test should never abort.
Any	FAIL	This test should never fail. 1. Retry the command at 1-minute intervals a maximum of 5 times. 2. If the test continues to fail, escalate the problem.
	PASS	The message to clear the Maintenance/Test circuit pack's counter for Background Maintenance Failures has been sent.

Digital Port Sanity Test (#565)

This test verifies that the port circuitry involved in the digital trunk testing on the Maintenance/Test Digital Port is functioning properly. This circuitry is common to both Maintenance/Test Digital Ports on the Maintenance/Test circuit pack. Therefore, this test is only run for port 2. The test will abort when run on port 3, as described in Table 9-245 below.

This test operates by connecting the two Maintenance/Test Digital Ports on the TDM Bus so that they talk and listen to each other. Then four self-tests are attempted: (a) sending data from port 2 to port 3 in asynchronous mode; (b) sending data from port 3 to port 2 in asynchronous mode; (c) sending data from port 2 to port 3 in synchronous mode; and (d) sending data from port 3 to port 2 in synchronous mode. The test passes if all four of these self-tests are successful. The test will stop as soon as any one of these self-tests fails.

This test will abort if an ISDN Test Call is in progress on either Maintenance/Test Digital Port when the test is requested, or if an ISDN Test Call is initiated while the Digital Port Sanity Test is in progress

Table 9-245. TEST #565 Digital Port Sanity Test

Error Code	Test Result	Description/ Recommendation
1000	ABORT	One of the Maintenance/Test Digital Ports is busy with background maintenance. 1. Either wait for the port to become idle, or busy-out both Maintenance/Test Digital Ports on the Maintenance/Test circuit pack via the **busy-out port** UUCSS**02** and **busy-out port** UUCSS**03** commands, respectively. 2. Release the ports (if they were busied out) via the **release port** UUCSS**02** and **release port** UUCSS**03** commands, respectively. 3. Retry the command at 1-minute intervals a maximum of 5 times. 4. If the test continues to abort, escalate the problem.

Continued on next page

Table 9-245. TEST #565 Digital Port Sanity Test — *Continued*

Error Code	Test Result	Description/ Recommendation
1002	ABORT	The system could not allocate time slots for the test. The system may be under heavy traffic conditions, or it may have time slots out-of-service due to TDM-BUS errors. Refer to the TDM-BUS Maintenance documentation to diagnose any active TDM Bus errors. 1. If the system has no TDM-BUS errors, and if not handling heavy traffic, repeat the test at 1-minute intervals a maximum of 5 times. 2. If the test continues to abort, escalate the problem.
1004	ABORT	The port was seized by a valid ISDN-PRI Test Call. Use the **list isdn-testcall** command to determine which call is using the port (from the M/T Port column). Either wait for the test call to complete (as indicated in the Start Time and Duration fields of the above display), or abort the test call with the **clear isdn-testcall grp/mem** command, where **grp/mem** is determined from the B-channel field of the above display.
1019	ABORT	An ISDN Test Call is in progress using this Maintenance/Test circuit pack. The Maintenance/Test circuit pack cannot perform a self-test on one of its Digital Ports while an ISDN Test Call is using either of the Digital Ports. Use the **list isdn-testcall** command to determine which call is using the port (form the M/T Port column). Either wait for the test call to complete (as indicated in the Start Time and Duration fields of the above display), or abort the test call with the **clear isdn-testcall grp/mem** command, where **grp/mem** is determined from the B-channel field of the above display. 1. Retry the command at 1-minute intervals a maximum of 5 times. 2. If the test continues to abort and the port is not in use, escalate the problem.

Continued on next page

Table 9-245. TEST #565 Digital Port Sanity Test — *Continued*

Error Code	Test Result	Description/ Recommendation
1138	ABORT	This test does not run on port 3 of the Maintenance/Test circuit pack. This test will only run on port 2. Look at the results of the Digital Port Sanity Test for port 2. 1. Run the command again for port 2 via the **test port** UUCSS**02** or **test port** UUCSS**02 l** command.
2000	ABORT	Response to the test request was not received within the allowable time period.
2100	ABORT	System resources required to run this test are not available.
2500	ABORT	An internal operation failed; the test could not be completed. 1. Retry the command at 1-minute intervals a maximum of 5 times. 2. If the test continues to fail, escalate the problem.
50	FAIL	The switch was unable to communicate with the port circuitry used for digital trunk testing.
100	FAIL	Data was not sent from port 2 to port 3 successfully in asynchronous mode.
101	FAIL	Data was not sent from port 3 to port 2 successfully in asynchronous mode.
102	FAIL	Data was not sent from port 2 to port 3 successfully in synchronous mode.
103	FAIL	Data was not sent from port 3 to port 2 successfully in synchronous mode. 1. Reset the circuit pack via the **busy-out board UUCSS**, **reset board UUCSS**, **release board UUCSS** command sequence. 2. Test the port again via the **test port** UUCSS**02 l** command. 3. If the test fails again, replace the circuit pack.
	PASS	The Maintenance/Test Digital Port digital trunk testing capability is operating correctly.

Hook State Inquiry (#566)

This test ensures that the Maintenance/Test Digital Port maintenance software and call processing agree on the on-/off-hook status of the Maintenance/Test Digital Port.

Table 9-246. TEST #566 Hook State Inquiry

Error Code	Test Result	Description/ Recommendation
1	ABORT	Switch hook audit timed out. No response was received from the circuit pack for information about the switch hook state. 1. Retry the command at 1-minute intervals a maximum of 5 times. 2. If the test continues to abort, replace the circuit pack and repeat the test. 3. If the test continues to abort, escalate the problem.
2100	ABORT	System resources required to run this test are not available. 1. Retry the command at 1-minute intervals a maximum of 5 times. 2. If the test continues to abort, escalate the problem.
Any	FAIL	Internal System Error This test should never return a failure. 1. Retry the command at 1-minute intervals a maximum of 5 times. 2. If the test continues to fail reset the circuit pack via the **busy-out board UUCSS**, **reset board UUCSS**, **release board UUCSS** command sequence. 3. Retry the command at 1-minute intervals a maximum of 5 times. 4. If the test continues to fail, escalate the problem.
	PASS	Call processing and Maintenance/Test Digital Port maintenance software agree on the Maintenance/Test Digital Port hook state.

M/T-PKT (Maintenance/Test Packet Bus Port)

MO Name As It Appears in Alarm Log	Alarm Level	Initial System Technician Command to Run (a)	Full Name of MO
M/T-PKT	Minor	test port UUCSSpp l	Maintenance/Test Packet Bus Port
M/T-PKT	Warning	release port UUCSSpp	Maintenance/Test Packet Bus Port

a. UU is the universal cabinet number (1 for PPN, 2 - 44 for EPNs). C is the carrier designation (A, B, C, D, or E). SS is the number of the slot in which the circuit pack resides (01 to 21). pp is the two digit port number (01, 02, ...).

The Maintenance/Test Packet Bus Port (M/T-PKT) is port number 4 on the TN771 Maintenance/Test circuit pack. The Packet Bus port provides the following Packet Bus maintenance functions:

- Packet Bus fault detection

  The ability to detect faults (e.g., shorts, open leads) on the Packet Bus autonomously (i.e. without SPE involvement).

- Packet Bus reconfiguration

  The ability to swap faulty leads with spare leads autonomously so that the Packet Bus remains operational. This is accomplished by sending messages to all Packet circuit packs [e.g., ISDN-BRI (TN556)] telling them which spare leads to use on the Packet Bus.

M/T-PKT maintenance ensures that these maintenance functions are operating correctly. The Maintenance/Test Packet Bus Port is alarmed if maintenance determines that the port's maintenance functions are operating incorrectly.

When M/T-PKT maintenance determines that the Packet Bus Port is defective, the Packet Bus fault detection and Packet Bus reconfiguration functions provided by the port will be turned off.

M/T-PKT maintenance interacts with Packet Bus maintenance. Therefore, there may be alarms on the Packet Bus when there is a fault on the M/T-PKT. Refer to PKT-BUS (Packet Bus) Maintenance documentation for further information.

Hardware Error Log Entries and Test to Clear Values

M/T-PKT Error Log Entries					
Error Type	**Aux Data**	**Associated Test**	**Alarm Level**	**On/Off Board**	**Test to Clear Value**
0*	0	Any	Any	Any	test port UUCSSpp
1 (a)	41018	none	MINOR	ON	test port UUCSSpp l r 3
18 (b)	0	busyout port UUCSSpp	WARNING	OFF	release port UUCSSpp
257 (c)	Any	none	MINOR	ON	
513 (d)	Any	Packet Bus Port Health Inquiry Test (#567)	MINOR	ON	test port UUCSSpp r 3

* Run the Short Test Sequence first. If all tests pass, run the Long Test Sequence. Refer to the appropriate test description and follow the recommended procedures.

Notes:

a. This error indicates a hardware failure with the port circuitry which provides the Packet Bus maintenance functions. Replace the Maintenance/Test circuit pack if the alarm is not resolved by the test command above.

b. The port has been busied out via the **busyout port UUCSSpp** command.

c. This error indicates that the Maintenance/Test Packet Bus Port has reconfigured the Packet Bus by swapping a bad lead to a spare. Note that this error is sent up whenever the Maintenance/Test Packet Bus Port is initialized (since the Packet Bus Port reconfigures the Packet Bus to whatever state it determines the Packet Bus is in). This will occur if the circuit pack is inserted, if the system is restarted, or if the port is released from a busyout state. Therefore, it is normal for this error to be present in the error log.

   If the M/T-PKT reconfigures the Packet Bus 6 times within 15 minutes, a Minor alarm is raised indicating that either Packet Bus maintenance functions are not operating correctly, or many changes are taking place on the Packet Bus (circuit pack insertions or removals). If the system has been in a stable state for more than 15 minutes, try the following procedure:

1. Reset the Maintenance/Test circuit pack from the G3-MT as follows:
   - Enter the **busyout board UUCSS** command.
   - Enter the **reset board UUCSS** command.
   - Enter the **release board UUCSS** command.
2. Wait 15 minutes.
3. If the error recurs, replace the Maintenance/Test circuit pack.

When this alarm is active, the yellow LED will be in one of three states:

- An unlit yellow LED indicates no activity on the Maintenance/Test circuit pack. You can replace the Maintenance/Test circuit pack.
- If there is an indication of an uncorrectable fault on the Packet Bus, the yellow LED will be blinking at a rate of 1 Hz. It is OK to replace the Maintenance/Test circuit pack. Ignore the Packet Bus error indication, since the Maintenance/Test circuit pack has been determined to be defective.
- If there is other activity on the Maintenance/Test circuit pack (i.e. ISDN Test Call), or if there is an indication of a correctable fault on the Packet Bus, the yellow LED will be on steady. If there is an ISDN Test Call in progress, it must be halted via the **clear isdn-testcall grp/member** command prior to replacing the circuit pack. Ignore the Packet Bus error indication, since the Maintenance/Test circuit pack has been determined to be defective.

d. This error indicates a failure of the Packet Bus Port Health Inquiry Test. Either the Packet Bus Port has reported a self-test failure, or the SPE is able to communicate with the Maintenance/Test Circuit Pack but not with the Maintenance/Test Circuit Pack Packet Bus Port. Refer to the description of the Packet Bus Port Health Inquiry Test, and follow the instructions indicated for the failure code that matches the Aux Data field.

System Technician-Demanded Tests: Descriptions and Error Codes

Always investigate tests in the order presented in the following tables when inspecting errors in the system.

Order of Investigation	Short Test Sequence	Long Test Sequence	D/ND*
Packet Bus Port Health Inquiry Test (#567)	X	X	ND
Clear Error Counters (#270)		X	ND

* D = Destructive; ND = Nondestructive

Clear Error Counters (#270)

This test is not an actual test in the strict sense of the word. Many circuit packs have counters in the Angel firmware. The circuit pack's Angel continuously runs port self-tests on idle ports and keeps track of any errors it detects by incrementing a firmware counter. When the counter value reaches some preset threshold, the Angel sends a single CCMS (Control Channel Message Set) error message uplink to the SPE. No more error messages of that type are sent uplink until the SPE sends a downlink message to clear the counter. This strategy keeps a failed port/circuit pack from flooding the SPE with a continuous string of identical error messages). This test is used to clear the counter, so that if the port continues to fail during or after SPE-demanded testing, the Angel will send a message to indicate that fact.

This test is only used to send a downlink message to the Angel on the Maintenance/Test circuit pack. Since the Angel normally provides no uplink response to this message, this test should never abort or fail.

Table 9-247. TEST #270 Clear Error Counters

Error Code	Test Result	Description/ Recommendation
Any	ABORT	This test should never abort.
Any	FAIL	This test should never fail. 1. Retry the command at 1-minute intervals a maximum of 5 times. 2. If the test continues to fail, escalate the problem.
	PASS	The message to clear the Maintenance/Test circuit pack's counter for Background Maintenance Failures has been sent.

Packet Bus Port Health Inquiry Test (#567)

This test verifies that the Packet Bus fault detection maintenance function of the M/T-PKT is functioning properly. This is done by having the M/T-PKT perform a self-test. If this self-test passes, then the Packet Bus Port Health Inquiry Test passes. If the self-test fails, or the SPE cannot communicate with the M/T-PKT, then the test fails

Table 9-248. TEST #567 Consistency Test

Error Code	Test Result	Description/ Recommendation
2000	ABORT	Response to the test request was not received within the allowable time period.
2100	ABORT	System resources necessary to run this test are not available.
2500	ABORT	An internal operation failed, and the test could not be completed. 1. Retry the command at 1-minute intervals a maximum of 5 times. 2. If the test continues to abort, escalate the problem.
2059	FAIL	The M/T-PKT has reported a failure of the on-board self-test.
2060	FAIL	The M/T-PKT has reported an invalid state for the Packet Bus.
2061	FAIL	The SPE cannot communicate with the M/T-PKT, but is able to communicate with the Maintenance/Test Circuit Pack. 1. Retry the command. 2. If the test continues to fail, replace the Maintenance/Test circuit pack and retry the command. 3. If the test continues to fail, refer to PKT-BUS Maintenance documentation to determine if the M/T-PKT failure is being caused by a Packet Bus fault.
	PASS	The M/T-PKT Packet Bus fault detection capability is operating correctly.

Maintenance Object Repair Procedures
OPS-LINE

O

OPS-LINE (DS1 Off Premises Station Line)

MO Name As It Appears in Alarm Log	Alarm Level	Initial System Technician Command to Run	Full Name of MO
OPS-LINE	MINOR	test station *extension* l	DS1 OPS Line
OPS-LINE	WARNING	test station *extension*	DS1 OPS Line

An analog Off-Premises Station (OPS) can be connected to the system through a DS1 link. A TN767 DS1 Interface circuit pack or a TN464 UDS1 Interface circuit pack can support up to 24 DS1 OPSs. Since the DS1 OPS is an analog telephone set, a channel multiplexer is necessary as the remote DS1 endpoint that converts the digital signal of a DS1 port to the OPS Line and vice versa.

The DS1 OPS Line Maintenance provides a strategy to maintain an OPS Line via a trunk port of the TN767 DS1 Interface circuit pack or the TN464 UDS1 Interface circuit pack. (Throughout this section, the term DS1 Interface can apply to either of these circuit packs.) The strategy covers initialization tests, periodic tests, scheduled tests, system technician-demanded tests, and alarm resolution and escalation. Two service states are specified in a DS1 OPS Line maintenance. They are: *out-of-service*, in which the line is in a deactivated state and cannot be used for either incoming or outgoing calls; or *in-service*, in which the line is in an activated state and can be used for both incoming and outgoing calls. If the DS1 Interface circuit pack is out-of-service, then all lines on the DS1 Interface circuit pack are put into the out-of-service state, and a Warning alarm is raised.

For maintenance of the remote DS1 endpoint (for example, a Channel Division Multiplexer or D4 Channel Bank), refer to the maintenance documentation from its vendor for details.

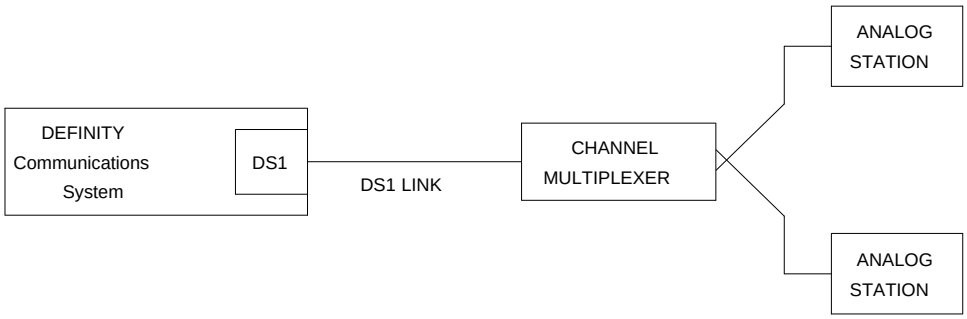

Figure 9-70. DS1 OPS Line Interactions

Hardware Error Log Entries and Test to Clear Values

DS1 OPS Maintenance Error Log Entries					
Error Type	**Aux Data**	**Associated Test**	**Alarm Level**	**On/Off Board**	**Test to Clear Value**
0*	0	Any	Any	Any	test station <ext>
15(a)	Any	Audit and Update Test (#36)			
18(b)	0	busyout station <ext>	WARNING	OFF	release station <ext>
130(c)		None	WARNING	ON	test station <ext>
1281		Conference Circuit Test (#7)	MINOR	ON	test station <ext> l r 4
1537		NPE Crosstalk Test (#6)	MINOR	ON	test station <ext> l r 3
1793(d)					test board UUCSS l

* Run the Short Test Sequence first. If all tests pass, run the Long Test Sequence. Refer to the appropriate test description and follow the recommended procedures.

Notes:

a. This is a software audit error that does not indicate any hardware malfunction. Run the Short Test Sequence and investigate associated errors (if any).

b. The DS1 OPS Line has been busied out by a **busyout station <ext>** command. No calls can be made on this line.

c. This error type indicates that the circuit pack has been removed or has been insane for more than 11 minutes. To clear the error, reinsert or replace the circuit pack.

d. Error Type 1793 indicates a problem with the DS1 Interface circuit pack. Since there is no error against the OPS-LINE port, no alarm is raised against the OPS-LINE port. However, there should be errors logged against the DS1 Interface circuit pack. Look for DS1-BD/UDS1-BD errors in the Hardware Error Log and follow the appropriate procedures provided in the DS1-BD/UDS1-BD (DS1/UDS1 Interface Circuit Pack) Maintenance documentation.

System Technician-Demanded Tests: Descriptions and Error Codes

Always investigate tests in the order presented in the table below when inspecting errors in the system. By clearing error codes associated with the *NPE Crosstalk Test,* for example, you may also clear errors generated from other tests in the testing sequence.

Order of Investigation	Short Test Sequence	Long Test Sequence	D/ND*
NPE Crosstalk Test (#6)		X	ND
Conference Circuit Test (#7)		X	ND
DS1 OPS Switchhook Inquiry Test (#312)	X	X	ND
Audit and Update Test (#36)	X	X	ND

* D = Destructive; ND = Nondestructive

NPE Crosstalk Test (#6)

One or more Network Processing Elements (NPEs) reside on each circuit pack with a TDM Bus interface. (The TN464 UDS1 circuit pack has one SCOTCH-NPE chip instead of several NPE chips.) The NPE controls port connectivity and gain, and provides conferencing functions on a per-port basis. The NPE Crosstalk Test verifies that this port's NPE channel talks on the selected time slot and never crosses over to time slots reserved for other connections. If the NPE is not working correctly, one-way and noisy connections may be observed. This test is usually only part of a port's Long Test Sequence and takes about 20 to 30 seconds to complete

Table 9-249. TEST #6 NPE Crosstalk Test

Error Code	Test Result	Description/ Recommendation
	ABORT	System resources required for this test are not available. 1. Retry the command at 1-minute intervals a maximum of 5 times. 2. If the test continues to abort, escalate the problem.
1000	ABORT	System resources required to run this test are not available. The port may be in use on a valid call. Use **status station** or **status trunk** command to determine when the port is available for testing. 1. Retry the command at 1-minute intervals a maximum of 5 times. 2. If the test continues to abort, and the port is not in use, escalate the problem.
1001	ABORT	Could not allocate the necessary system resources to run this test. 1. Retry the command at 1-minute intervals a maximum of 5 times. 2. If the test continues to abort, escalate the problem.

Continued on next page

Table 9-249. TEST #6 NPE Crosstalk Test — *Continued*

Error Code	Test Result	Description/ Recommendation
1002	ABORT	The system could not allocate time slots for the test. The system may be under heavy traffic conditions or it may have time slots out-of-service due to TDM-BUS errors. The **status health** command can be used to determine if the system is experiencing heavy traffic. Refer to TDM-BUS (TDM Bus) Maintenance documentation to diagnose any active TDM-BUS errors. 1. If system has no TDM-BUS errors and is not handling heavy traffic, repeat test at 1-minute intervals a maximum of 5 times. 2. If the test continues to abort, escalate the problem.
1003	ABORT	The system could not allocate a tone receiver for the test. The system may be oversized for the number of Tone Detectors present or some Tone Detectors may be out-of-service. The **list measurements tone-receiver** command will display information on the system's tone receivers. 1. Look for TTR-LEV errors in the Error Log. If present, refer to TTR-LEV (TTR Level) Maintenance documentation. 2. Look for TONE-PT errors in the Error Log. If present, refer to TONE-PT (Tone Generator) Maintenance documentation. 3. If neither condition exists, retry the test at 1-minute intervals a maximum of 5 times. 4. If the test continues to abort, escalate the problem.
1004	ABORT	The port has been seized by a user for a valid call. Use **status station** command to determine when the port is available for testing. 1. Retry the command at 1-minute intervals a maximum of 5 times. 2. If the test continues to abort, and the port is not in use, escalate the problem.

Continued on next page

Table 9-249. TEST #6 NPE Crosstalk Test — *Continued*

Error Code	Test Result	Description/ Recommendation
1020	ABORT	The test did not run due to a previously existing error on the specific port or a more general circuit pack error. 1. Examine Error Log for existing errors against this port or the circuit pack, and attempt to diagnose the already existing error.
2000	ABORT	Response to the test request was not received within the allowable time period.
2100	ABORT	System resources required for this test are not available. 1. Retry the command at 1-minute intervals a maximum of 5 times. 2. If the test continues to abort, escalate the problem.
	FAIL	The NPE of the tested port was found to be transmitting in error. This will cause noisy and unreliable connections. 1. Replace the circuit pack.
	PASS	The port is correctly using its allocated time slots. User-reported troubles on this port should be investigated using other port tests and by examining station, trunk, or external wiring.

Conference Circuit Test (#7)

One or more Network Processing Elements (NPEs) reside on each circuit pack with a TDM Bus interface. (The TN464 UDS1 circuit pack has one SCOTCH-NPE chip instead of several NPE chips). The NPE controls port connectivity and gain, and provides conferencing functions on a per-port basis. The Conference Circuit Test verifies that the NPE channel for the port being tested can correctly perform the conferencing function. The NPE is instructed to listen to several different tones and conference the tones together. The resulting signal is then measured by a Tone Detector port. If the level of the tone is within a certain range, the test passes

Table 9-250. TEST #7 Conference Circuit Test

Error Code	Test Result	Description/ Recommendation
	ABORT	System resources required for this test are not available. 1. Retry the command at 1-minute intervals a maximum of 5 times. 2. If the test continues to abort, escalate the problem.
1000	ABORT	System resources required to run this test are not available. The port may be in use on a valid call. Use the **status station** or **status trunk** command to determine when the port is available for testing.
1004	ABORT	The port has been seized by a user for a valid call. Use **status station** or **status trunk** command to determine when the port is available for testing. 1. Retry the command at 1-minute intervals a maximum of 5 times. 2. If the test continues to abort, and the port is not in use, escalate the problem.
1018	ABORT	Test disabled via administration. This only applies to analog stations. 1. To enable test, set the Test field on the station administration screen for the particular analog station being tested to ‘‘y.’’ Use the **change station <extension>** command.

Continued on next page

Table 9-250. TEST #7 Conference Circuit Test — *Continued*

Error Code	Test Result	Description/ Recommendation
1020	ABORT	The test did not run due to a previously existing error on the specific port or because of a more general circuit pack error. 1. Examine Error Log for existing errors against this port or the circuit pack, and attempt to diagnose the already existing error.
2000	ABORT	Response to the test request was not received within the allowable time period.
2100	ABORT	System resources required for this test are not available. 1. Retry the command at 1-minute intervals a maximum of 5 times. 2. If the test continues to abort, escalate the problem.
	FAIL	The NPE of the tested port did not conference the tones correctly. This will cause noisy and unreliable connections. 1. Replace the circuit pack.
	PASS	The port can correctly conference multiple connections. User-reported troubles on this port should be investigated using other port tests and by examining station, trunk, or external wiring.

Audit and Update Test (#36)

This test sends port level translation data from switch processor to the DS1 Interface circuit pack to assure that the trunk's translation is correct. Translation updates include the following data: line type, dial type, timing parameters, and signaling bits enabled. The port audit operation verifies the consistency of the current state of the trunk as kept in the DS1 Interface circuit pack and in the switch software

Table 9-251. TEST #36 Audit and Update Test

Error Code	Test Result	Description/ Recommendation
	ABORT	Internal System Error 1. Retry the command at 1-minute intervals a maximum of 5 times. 2. If the test continues to abort, escalate the problem.
2000	ABORT	Response to the test request was not received within the allowable time period.
2100	ABORT	Could not allocate the necessary system resources to run this test.

Continued on next page

Table 9-251. TEST #36 Audit and Update Test — *Continued*

Error Code	Test Result	Description/ Recommendation
7 or 8	FAIL	Test failed due to internal system error. ■ Error code 7: the failure occurred during station translation download (to DS1 Interface circuit pack). ■ Error code 8: the failure occurred during station ringer update. 1. Retry the command at 1-minute intervals a maximum of 5 times. 2. If the test continues to fail, escalate the problem.
	PASS	Trunk translation has been updated successfully. The current trunk states kept in the DS1 Interface circuit pack and switch software are consistent. If the trunk is busied out, the test will not run but will return PASS. To verify that the station is in-service: 1. Enter the **status station** command to verify that the station is in-service. If the station is in-service, no further action is necessary. If the station is out-of-service, continue to step 2. 2. Enter the **release station** command to put the station back into in-service. 3. Retry the test command.

DS1 OPS Switchhook Inquiry Test (#312)

This test initiates the Switchhook Audit Test. The test queries the switchhook state of the Off-Premises-Station in switch software. If the state in switch software disagrees with the state on the DS1 Interface circuit pack, then the state in the switch software is updated to match the state on the DS1 Interface circuit pack

Table 9-252. TEST #312 DS1 OPS Switchhook Inquiry Test

Error Code	Test Result	Description/ Recommendation
	ABORT	Internal System Error 1. Retry the command at 1-minute intervals a maximum of 5 times. 2. If the test continues to abort, escalate the problem.
1004	ABORT	The port has been seized by a user for a valid call. Use the **status station** command to determine when the port is available for testing. 1. Retry the command at 1-minute intervals a maximum of 5 times. 2. If the test continues to abort, and the port is not in use, escalate the problem.
1005	ABORT	Test failed due to incompatible configuration administered in station administration. 1. Using the **display station** command, verify that the station is not the 24th port of the DS1 Interface circuit pack while common channel signaling is specified. Use the **display ds1** command to check the signaling type of the DS1 circuit pack.
1006	ABORT	Station is in out-of-service state. 1. Enter **status station** command to check the current state. If the state is out-of-service, then enter **release station** command to bring station back to in-service state. 2. Retry the command at 1-minute intervals a maximum of 5 times. 3. If the test continues to abort, and the station is in the in-service/idle state, escalate the problem.

Continued on next page

Table 9-252. TEST #312 DS1 OPS Switchhook Inquiry Test — *Continued*

Error Code	Test Result	Description/ Recommendation
1020	ABORT	The DS1 Interface circuit pack is out-of-service. 1. Look for DS1-BD/UDS1-BD errors in Hardware Error Log. If present, refer to the appropriate DS1-BD/UDS1-BD (DS1/UDS1 Interface Circuit Pack) Maintenance documentation. 2. Retry the command. 3. If the test continues to abort, escalate the problem.
2000	ABORT	Response to the test request was not received within the allowable time period.
2100	ABORT	Could not allocate the necessary system resources to run this test. 1. Retry the command at 1-minute intervals for a maximum of 5 times. 2. If the test continues to abort, escalate the problem.
1	FAIL	Internal System Error. 1. Look for DS1-BD/UDS1-BD errors in the Hardware Error Log. If present, refer to the appropriate DS1-BD/UDS1-BD (DS1/UDS1 Interface Circuit Pack) Maintenance documentation. 2. If a channel multiplexer is used as the remote DS1 endpoint to which the station connects, refer to the multiplexer vendor's maintenance document for diagnosis. 3. Retry the command at 1-minute intervals a maximum of 5 times. 4. If the test continues to fail, escalate the problem.
	PASS	The station hook states in both switch software and DS1 Interface circuit pack are consistent.

Maintenance Object Repair Procedures
PDATA-BD to PROCR

P

PDATA-BD (Packet Data Line Circuit Pack)

MO Name As It Appears in Alarm Log	Alarm Level	Initial System Technician Command to Run (a)	Full Name of MO
PDATA-BD	MINOR	test board UUCSS	PDATA Board Maintenance

a. UU is the universal cabinet number (1 for PPN, 2 - 44 for EPNs). C is the carrier designation (A, B, C, D, or E). SS is the number of the slot in which the circuit pack resides (01 to 21).

The TN553 Packet Data Line (PDATA-BD) circuit pack supports the connection of twelve (12) asynchronous EIA RS-232C endpoints to the packet bus. Functions of this circuit pack are described in the PDATA-PT section.

Hardware Error Log Entries and Test to Clear Values

PDATA Board Error Log Entries

Error Type	Aux Data	Associated Test	Alarm Level†	On/Off Board	Test to Clear Value
0*		Any	Any	Any	test port UUCSSpp sh r 1
1(a)		None	MINOR	ON	
18(b)		Busyout Board	WARNING	OFF	release board UUCSS
257(c)		CC Loop Test (#52)	MINOR	ON	test board UUCSS r3
513(d)					
769(e)					
1293(f)	46088 to 46089		MINOR	ON	
1538(g)	46082		MINOR	ON	
1793(h)	46080		MINOR	ON	
2306(i)	46081				
3330(j)	46083		MINOR	ON	
3840(k)	4096 to 4101				
3843(l)	46097				
3999(m)	Any	None			

* Run the Short Test Sequence first. If all tests pass, run the Long Test Sequence. Refer to the appropriate test description and follow the recommended procedures.

† Major or Minor alarms on this MO may have been downgraded to Warning alarms based on the values used in the **set options** command.

Notes:

a. Error type 1 indicates the circuit pack has stopped functioning or has been physically removed from the system. This error type does not apply to ANN-BD, DETR-BD, S-SYN-BD, M/T-BD, or CLSFY-BD. The alarm is logged approximately 11 minutes after removal of the circuit pack or failure of the SAKI Sanity Test (#53).

Check for the physical presence of the circuit pack in the slot indicated by the alarm. If the circuit pack is not present, insert one of the proper type. If the circuit pack is present and its red LED is lit, see "LED Alarms without Alarm Log Entry or with Error Type 1" in Chapter 7, "LED Indicators".

b. The circuit pack has been busied out via the **busyout board UUCSS** command.

c. This error indicates communication problems between the switch and this circuit pack. Execute the **test board UUCSS** command and refer to the repair procedures for Control Channel Loop-Around Test (#52).

d. An on-board hardware failure has been detected by the circuit pack. Reset the circuit pack by executing **busyout board UUCSS** and **reset board UUCSS** commands. If there is a problem, it will be detected during initialization and will cause the circuit pack to lock up and appear insane to the system. See the repair procedure in footnote (a).

e. This error is reported by the circuit pack when it detects a program logic error. While no action is required, this error may lead to errors of other types being reported against this circuit pack.

f. A critical hardware failure (one or both of the data processors are insane) has been detected on the circuit pack. Reset the circuit pack via the **busyout board UUCSS** and **reset board UUCSS** commands. If the circuit pack Restart Test (#594) passes, then the on-board circuitry is healthy. Retire the alarm via the **test board UUCSS long clear** command. If the circuit pack Restart Test (#594) fails, replace the circuit pack.

   This error is also caused when the buffers on the board receive data faster than they can transmit to the endpoints (Receive FIFO Overflow). Use the above steps to repair the problem.

g. Circuit pack is hyperactive; i.e., it is flooding the switch with messages sent over the control channel. The circuit pack is taken out-of-service when a threshold number of these errors is reported to the switch. Clear the alarm via the following commands: **busyout board UUCSS, reset board UUCSS, test board UUCSS long clear, release board UUCSS**. if the error recurs within 10 minutes, then replace the circuit pack.

h. This error indicates that parity errors are detected when transmitting data to the Packet Bus. Reset the circuit pack via **busyout board UUCSS** and **reset board UUCSS** commands. Also clear the alarm via **test board UUCSS long clear**. If the error returns within 10 minutes, then replace the circuit pack.

i. This error occurs when the circuit pack detects and error in a received frame from the packet bus. These errors are most likely caused by a packet bus problem, but may be due to a circuit pack fault.

   Perform a LANHO Receive Parity Error Counter Test (#595) via **test board UUCSS l** to determine if the condition has cleared. Also refer to PKT-BUS Maintenance documentation to determine if the problem is isolated to this circuit pack or if the problem is caused by Packet Bus faults.

j. A critical failure has been detected in the Packet Bus interface of the circuit pack. This failure may be due to an on-board fault or a Packet Bus fault. If the Packet Bus is alarmed, refer to the PKT-BUS Maintenance documentation for recommended repair procedures.

   If the Packet Bus is not alarmed, reset the circuit pack via **busyout board UUCSS** and **reset board UUCSS** commands. If the circuit pack Restart Test (#594) passes, then the on board circuitry is healthy. Retire the alarm via the **test board UUCSS long clear** command. If the circuit pack Restart Test (#594) fails, replace the circuit pack.

k. This error is not service affecting. No action is required. This error is reported by the circuit pack when it receives a bad control channel message from the switch.

l. This error is not service-affecting. No action is required. A bad translation RAM has been detected, but call continues by using another translation RAM location.

m. Error type 3999 indicates that the circuit pack sent a large number of control channel messages to the switch within a short period of time. If error type 1538 is also present, then the circuit pack was taken out-of-service due to hyperactivity. If error type 1538 is not present, then the circuit pack has not been taken out-of-service, but it has generated 50% of the messages necessary to be considered hyperactive. This may be completely normal during heavy traffic periods. However, if this error type is logged when the circuit pack is being lightly used, it may indicate a problem with the circuit pack or the equipment attached to it.System Technician-Demanded Tests:
   Descriptions and Error Codes

Always investigate tests in the order presented in the table below when inspecting errors in the system. By clearing error codes associated with the *Control Channel Loop Around Test* for example, you may also clear errors generated from other tests in the testing sequence.

Order of Investigation	ShortTest Sequence	Long Test Sequence	D/ND*
Control Channel Loop-Around Test (#52) (a)	X	X	ND
SAKI Sanity Test (#53) (a)		X	ND
LANHO Receive Parity Error Counter Test (#595)		X	D

* D = Destructive; ND = Nondestructive

Note:

a. For Control Channel Loop-Around Test (#52), and SAKI Sanity Test (#53) refer to the respective repair procedures described in XXX-BD (Common Port Circuit Pack) Maintenance documentation section.

LANHO Receive Parity Error Counter Test (#595)

This test reads and clears the LANHO Receive Parity Error Counter on the circuit pack. This counter is incremented by the circuit pack firmware each time it detects a parity error in the data received from the Packet Bus.

These errors may be indicative of a circuit pack problem, Packet Bus problem, or a problem with another circuit pack on the bus. This test is useful for verifying the repair of the problem.

Table 9-253. Test #595 LANHO Receive Parity Error Counter Test

Error Code	Test Result	Description/ Recommendation
2000	ABORT	Response to the test was not received from the circuit pack within the allowable time period. 1. If the test aborts repeatedly a maximum of 5 times, reset the circuit pack via the **busyout board UUCSS** and **reset board UUCSS** commands. 2. If the test aborts again, replace the circuit pack.
2100	ABORT	Could not allocate the necessary system resources to run this test.
2012	ABORT	Internal System Error. 1. Retry the command at 1-minute intervals a maximum of 5 times. 2. If the test continues to fail, escalate the problem.

Continued on next page

Table 9-253. Test #595 LANHO Receive Parity Error Counter Test — *Continued*

Error Code	Test Result	Description/ Recommendation
1-10	FAIL	The circuit pack is still detecting errors of this type. The error code indicates the value of the on-board error counter. 1. Retry the command at 1-minute intervals a maximum of 5 times. 2. If the test continues to fail, verify the validity of the Packet Bus. Run the Packet Bus maintenance test with the **test pkt port-network port-network-number long** command. If any Packet Bus tests fail, refer to the Packet Bus Maintenance documentation for recommended repair procedures. 3. If the Packet Bus test passes, check the validity of the circuit pack. Execute a test that involves data transmission onto the Packet Bus. For example, the PDATA Port Local Loop-Around Test (#602). This test can be run by executing **test port UUCSSpp** command. 4. Other circuit packs on the Packet Bus may be the cause of the parity error. Use the **display alarms** command to check the Error Log for other circuit packs that are alarmed. If any alarms are present for other circuit packs, retire those alarms also. Then, rerun the LANHO Receive Parity Error Counter Test (#595) via **test board UUCSS long** on this circuit pack.
	PASS	No errors detected by the circuit pack.

PDATA-PT (Packet Data Line Port)

MO Name As It Appears in Alarm Log	Alarm Level	Initial System Technician Command to Run (a)	Full Name of MO
PDATA-PT	MINOR	test port UUCSSpp	PDATA Port Maintenance
PDATA-PT	WARNING	release port UUCSSpp	PDATA Port Maintenance

a. UU is the universal cabinet number (1 for PPN, 2 - 44 for EPNs). C is the carrier designation (A, B, C, D, or E). SS is the number of the slot in which the circuit pack resides (01 to 21). pp is the two digit port number (01, 02, ...).

System Ports and the PDATA Circuit Pack

The Packet Data Line Circuit (PDATA TN553) port board supports the connection of asynchronous EIA RS-232C endpoints to the packet bus. Each PDATA circuit pack has twelve (12) ports. PDATA ports are used solely to support the System Ports feature. System ports provide a means for the SPE to communicate with data applications via the TDM bus, something the SPE cannot otherwise do, since it has no direct circuit-switched access to the TDM bus. Each system port consists of a PDATA circuit pack port and a Data Line (TN726B) circuit pack port which are cross-connected at the wall field. The PDATA side of the pair provides an interface to the Packet Bus for Mode 3 packet data coming from the SPE via the Packet Interface circuit pack. The PDATA converts the Mode 3 packet data into EIA data which the Data Line circuit pack then converts to Mode 2 data and places on the TDM bus. The data stream can then be directed to any external application having an EIA interface by routing it through another Data Line port (See Figure 9-71 on the next page.) System ports allow the following applications to communicate with the SPE:

- Save/Restore of Announcement Circuit Pack Recorded Announcements
- Call Detail Recording (CDR)
- Journal Printer for the Property Management System (PMS)
- Wakeup Log Printer for the Property Management System (PMS)
- System Printer
- Data Terminals
- Remote G3-MT terminals

Although the paired PDATA and Data Line circuit packs used for system ports may be located independently and in any port network, they are usually placed in adjacent slots in the PPN.

Data Applications and System Port Connectivity

As part of each data application, the SPE connects itself to the application device through a system port. The application device may be an external terminal, printer, or data-module, or it may be circuitry internal to the switch, as is the case for the Announcement Circuit pack data-module used to save and restore recorded announcements. Figure 9-71 below is an example of a system port connection using a second Data Line circuit pack (DAT-LN-BD) port to provide dial-in access for a remote terminal.

A feature may not have a permanent connection to a system port. For example, the announcement feature uses the system port when it is saving or restoring announcement data to or from the Mass Storage System. The rest of the time it does not use a system port. This makes troubleshooting these links more difficult, since the symptoms may appear on one side of the link while the problem is on the other. If the link is no longer up, there is no way to determine which system port experienced the problem.

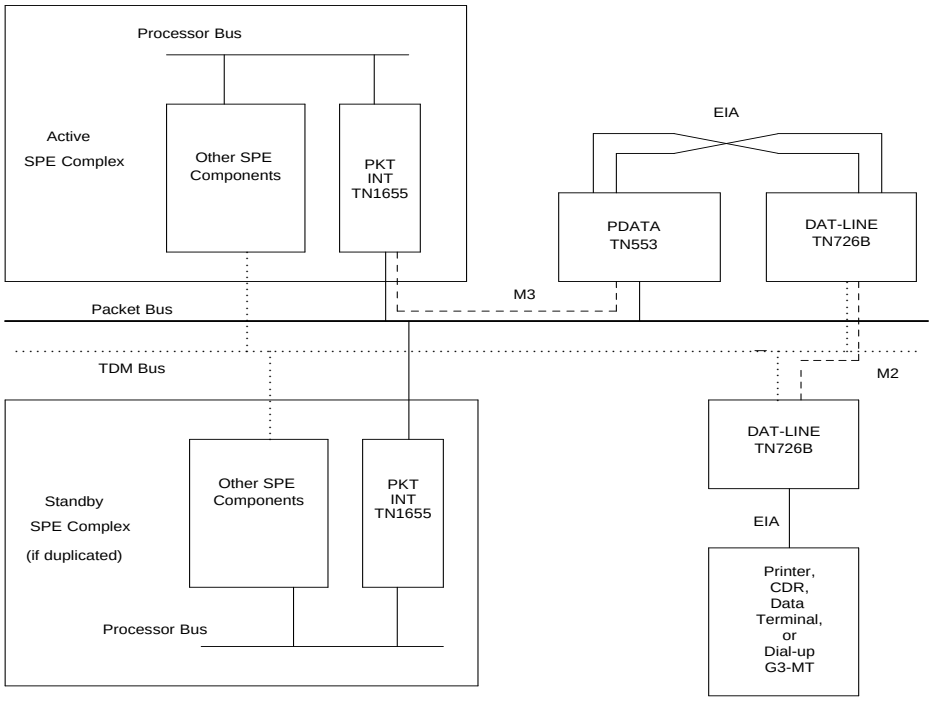

Figure 9-71. Typical System Port Connection

Testing the System Port Pool

This section describes a method for isolating a bad system port when its location is not known. A pool of system ports is used to service the set of application features listed above. The system supports a maximum of 10 system ports. Since each Data Line Circuit pack provides 8 ports and each PDATA provides 12 ports, 2 Data Line Circuit packs and one PDATA Circuit pack are required if all 10 system ports are to be administered. If a link failed due to a faulty system port and that port is not currently connected to the feature, you will need to test the entire pool to isolate the bad system port. Follow these steps to isolate a bad port or exonerate the pool of system ports.

1. Enter **list data-module** and record the extension for each system port. Note: **list data-module name** option can be used to match on the name of the system ports if they are all named similarly.
2. For each system-port enter **display data-module ext** to find the Data Line (DAT-LINE) and PDATA ports administered. Each system port has a single extension that applies to both the Data Line and PDATA port. For historical reasons the PDATA is considered the **associated port**.
3. Check each port for alarms and errors using **display alarms** and **display errors**.
4. Check for SYS-LINK error or alarms for SAP-type links using **Display alarms** and **errors**.
5. Follow the repair procedures for any ports with errors.

Identifying Components of an Application Link

Use this procedure to locate the maintenance objects that make up a given application link. You can then follow the repair procedures for each MO. In the steps given below all the MOs in a link are located before any ports are tested.

Problems with the application adjunct links are reported in two ways:

- The data application experiences problems.
- Errors or alarms are logged against a port or extension.

Locating MOs When the Data Application Link Fails

This sequence of steps should be used if the application is experiencing problems and the health of the ports is unknown.

1. Using column three of the commands table below, find the command to display the status of the application link. Enter the command to confirm the health of the link. If the command requires a data-module extension, enter **list data-module** to determine the extension.

2. If column two of the table below shows there is a link MO for the application, enter **display alarms** and **display errors**. If there are alarms or errors against the MO, follow the repair procedures for that MO.
3. Using column 4 of the table below, find the command to display the extension of the application link. Enter the command and record the extension.
4. Enter **status data-module** ext for the extension found in the previous step. Record any connected ports.
5. If there are connected ports enter **display port** UUCSSpp and record the extension for each port. The equipment type displayed should be `SYSTEM PORT DATA MODULE`. Run **status data-module** ext for the connected port. Record the associated PDATA port.
6. If there are no connected ports, follow the steps in *Testing the System Port Pool* above to isolate or exonerate the system ports.
7. For each port, application extension, and connected Data Line and PDATA ports, check the alarm and error logs for entries against these ports. Follow the repair procedures for each port with problems.
8. Enter **list sys-link** and look for a SAP-type link with a port location that matches the PDATA port. Check the alarm and error logs for entries against the SYS-LINK. Follow repair procedures for SYS-LINK problems.
9. If problems continue escalate.

Locating MOs When Only a Problem Port Is Known

A system port problem may originate in any of the following three components. You may not know at first which is causing the problem.

- The application port
- The PDATA port
- The Data Line port

1. Enter **display port** UUCSSpp to find out what kind of port this is. Record the extension and the identification field. The identification field likely indicates a system-port or another type of data-module.
2. *If the port is a system port,* enter **status data-module** ext. Record the Data Line or PDATA port. If there is a connected port do the following:
   a. Record the location of the connected port.
   b. Run **display port** UUCSSpp for the connected port and record the identification and extension for the port.

c. *If the port is an announcement port,* skip this step. Otherwise, determine whether the port's extension is administered as an application extension. Do this by executing each command in column 4 of the table below, checking the extension administered for that application against the port's extension.

For each port and application located, check the alarm and error logs for entries against these MOs. Follow repair procedures for MOs with log entries. In situations where no connected ports were listed, test each application link to ensure that more than one problem wasn't involved.

3. If the port is not a system port, enter **status data-module ext** and record the connected ports, if any are present.
4. Locate the application affected by entering each command in column 4 of the table below and checking the administered extension. The extension might be used as a remote G3-MT or data terminal.
5. If the status data-module display indicates no connected ports, follow the steps in *Testing the System Port Pool* above to verify that the system ports are working. If connected ports were displayed, enter **display port UUCSSpp** using the connected port displayed. Record the associated PDATA port.
6. For each port and application located, check the alarm and error logs for entries against these MOs. Follow the repair procedures for MOs with log entries. In situations where no connected ports were listed, test each application link to ensure that more than one problem wasn't involved.
7. Enter **list sys-link** and look for a SAP type link with a port location that matches the PDATA port. Check the alarm and error logs for entries against the SYS-LINK. Follow repair procedures for SYS-LINK problems.
8. If the problem continues, escalate.

Data Application Commands

Application Name	Application MO Name	Command to Display Link Status	Command to Locate the Extension
Announcement Circuit Pack	Not Applicable	Not Applicable	display announcements
CDR	CDR-LNK	status cdr-link	display sys-param cdr
Wakeup Log Print er for the PMS Journal Printer for the PMS	JRNL-LNK	status journal-link wakeup-log	display system-parameters hospitality
System Printer	SYS-PRNT	status sp-link	display system-parameters features
Data Terminals	Not Applicable	status data-module ext	list data-module
Remote G3-MT terminals	Not Applicable	status data-module ext	list data-module

System Port Wiring Scheme

If you find that you are having trouble with a PDATA port and you do not know which extensions are being affected or which Data Line port is attached, enter **display port** UUCSSpp with the PDATA port number to display the extension of the System Port. With this extension you can run **display data-module** ext, which will in turn identify the Data Line port. The PDATA and Data Line ports are wired together in a manner similar to a null-modem. Figure 9-72 illustrates the wiring scheme for the EIA ports. The subsequent table gives the full wiring sequence for eight Data Line ports attached to eight PDATA ports.

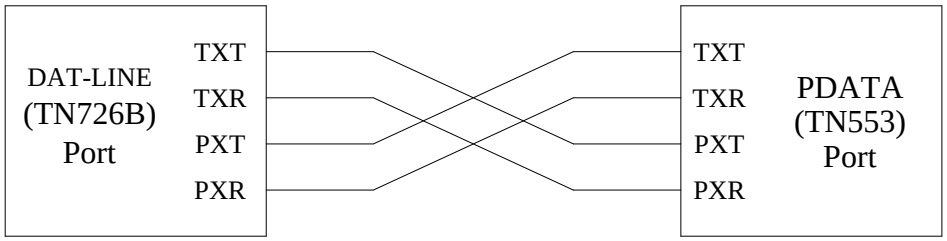

Figure 9-72. System Port Wiring Scheme

Table 9-254. Wiring Table for the System Ports Feature (eight ports)

Port	Data Line Port		PDATA Port	
	Amphenol Connector Pin #	Carrier Lead Appearance	Carrier Lead Appearance	Amphenol Connector Pin #
1	27	TXT1	PXT1	27
	2	TXR1	PXR1	2
	28	PXT1	TXT1	26
	3	PXR1	TXR1	1
2	30	TXT2	PXT2	29
	5	TXR2	PXR2	4
	31	PXT2	TXT2	28
	6	PXR2	TXR2	3
3	33	TXT3	PXT3	31
	8	TXR3	PXR3	6
	34	PXT3	TXT3	30
	9	PXR3	TXR3	5
4	36	TXT4	PXT4	33
	11	TXR4	PXR4	8
	37	PXT4	TXT4	32
	12	PXR4	TXR4	7
5	39	TXT5	PXT5	35
	14	TXR5	PXR5	10
	40	PXT5	TXT5	34
	15	PXR5	TXR5	9
6	42	TXT6	PXT6	37
	17	TXR6	PXR6	12
	43	PXT6	TXT6	36
	18	PXR6	TXR6	11

Continued on next page

Table 9-254. Wiring Table for the System Ports Feature (eight ports) — *Continued*

Port	Data Line Port		PDATA Port	
	Amphenol Connector Pin #	Carrier Lead Appearance	Carrier Lead Appearance	Amphenol Connector Pin #
7	45	TXT7	PXT7	39
	20	TXR7	PXR7	14
	46	PXT7	TXT7	38
	21	PXR7	TXR7	13
8	48	TXT8	PXT8	41
	23	TXR8	PXR8	16
	49	PXT8	TXT8	40
	24	PXR8	TXR8	15

Hardware Error Log Entries and Test to Clear Values

PDATA Port Error Log Entries

Error Type	Aux Data	Associated Test	Alarm Levell†	On/Off Board	Test to Clear Value
0*		Any	Any	Any	test port UUCSSpp sh r 1
1(a)		LAPD Connectivity Test (#558)	MINOR	ON	test port UUCSSpp r 3
18		Busy Port	WARNING	OFF	release port UUCSSpp
130(b)		None	WARNING	ON	test port UUCSSpp sh
257(c)					
513(c)					
779(c)					
1025(d)		Translation RAM Update	MINOR	ON	see footnote (c)
1281(e)					
1793(f)		Port Local Loop-Around Test (#602)	MINOR	ON	test port UUCSSpp
2049(g)		System Port Connectivity Test (#603)	MINOR	OFF	test port UUCSSpp
3842* 3843* 3844*	37914				test port UUCSSpp sh l

* Run the Short Test Sequence first. If all tests pass, run the Long Test Sequence. Refer to the appropriate test description and follow the recommended procedures.

† Major or Minor alarms on this MO may have been downgraded to Warning alarms based on the values used in the **set options** command.

Notes:

a. This error occurs if the LAPD Connectivity test fails. If this test fails repeatedly, a MINOR alarm is raised. This alarm indicates the failure to establish a LAPD link with the port and to send and receive test data over that port. See the repair procedure for LAPD Connectivity Test (#558).

b. This error type indicates that the circuit pack has been removed or has been insane for more than 11 minutes. To clear the error, reinsert or replace the circuit pack.

c. These three counters are incremented for errors which may or may not be caused by the PDATA port itself. For example, the Invalid LAPD Frame counter (error type 513) could exceed threshold due to a large number of "bad CRC" errors. The errors could be caused by packets arriving from the "other end" which have a bad CRC, in which case the PDATA port is behaving properly and should not be alarmed. On the other hand, the error could be caused by faulty CRC-checking hardware on the PDATA board, in which case the PDATA board should be alarmed.

   Since these error counters do not necessarily indicate problems with the PDATA port itself, no alarms are raised when the counters exceed threshold. Instead, testing escalates to the LAPD Connectivity Test. If the LAPD Connectivity test fails repeatedly, then the PDATA port is the source of the problem and will be alarmed. More exhaustive tests can be run with the **reset board UUCSS** command.

d. This error occurs if the switch has trouble in writing the translation data into memory. A MINOR alarm is raised if this error occurs. This alarm indicates the failure of either the Angel hardware or the RAM on the board. If the Angel is the cause of the failure, similar alarms should be raised against all other ports on the board. If the RAM is the cause of the failure, then only the port is affected-other ports may function normally.

   No associated test can retire this alarm. The repair procedure for this alarm is as follows. First, reset the circuit pack (i.e. use *busyout board UUCSS* and *reset board UUCSS* commands). If the circuit pack comes back into service after the reset (the red LED on the circuit pack is off), then execute the *test port UUCSSpp long clear* command to clear the alarm. If the PDATA circuit pack fails to reset properly (i.e. the red LED on the circuit pack is on.), replace the circuit pack.

   Notice that the corresponding Translation RAM test always passes because it issues a translation write command but does not wait around for the failure up-link message from the board.

e. This error occurs when the receive FIFO RAM buffers on a circuit pack overflow, i.e., the circuit pack receives data from the bus faster than it can distribute the data to its endpoints. If this error occurs frequently, however, it may indicate a LAPD parameter mismatch. LAPD should be able to recover from this problem, but it may degrade the performance of the Packet Bus. No alarm is raised for this error.

f. This error occurs if the PDATA Port Local Loop-Around test fails. If this test fails, a MINOR alarm is raised. This alarm indicates the failure of the UART device on the port. The circuit pack should be replaced if this alarm cannot be cleared. See the repair procedure for PDATA Port Local Loop-Around Test (#602) for more details.

g. This error occurs if the System Port Connectivity Test (#603) fails or if the System Port connection fails in the call set-up procedure. This error is only applicable to ports used as a System Port. If this test fails repeatedly, a MINOR alarm is raised.

System Technician-Demanded Tests: Descriptions and Error Codes

Always investigate tests in the order presented in the table below when inspecting errors in the system. By clearing error codes associated with the *PDATA Port Local Loop-Around Test* for example, you may also clear errors generated from other tests in the testing sequence.

Order of Investigation	Short Test Sequence	Long Test Sequence	D/ND*
PDATA Port Local Loop-Around Test (#602)	X	X	ND
LAPD Connectivity Test (#558)	X	X	D
System Port Connectivity Test (#603)	X	X	D

* D = Destructive; ND = Nondestructive

LAPD Connectivity Test (#558)

This test is destructive.

This is a connectivity test which checks if a specific PDATA port is capable of establishing a Level 2 LAPD link. The SPE will assign a LAPD bearer link between the SPE Packet Bus interface (i.e. the Packet Interface, also called PKTINT, TN1655) and the PDATA port. The SPE will send a test packet from the PKTINT to the PDATA port and it will expect to receive a reply from the PDATA port. Failure of this test may indicate an on-board fault associated with the port hardware on the PDATA circuit pack.

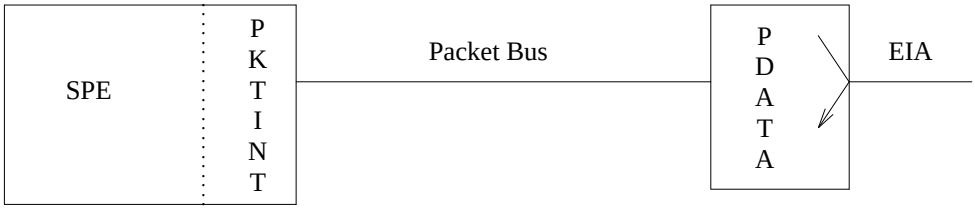

Figure 9-73. Configuration for LAPD Connectivity Test

Table 9-255. TEST #558 LAPD Connectivity Test

Error Code	Test Result	Description/ Recommendation
1000	ABORT	The port is in use for a call. Use **status data-module extension** command to determine when the port is available for testing. 1. Retry the command when the port is idle. The port may be forced to the idle state by executing the **busyout port UUCSSpp** command. This command is destructive causing all calls and links associated with the port to be torn down.
1137	ABORT	The test link could not be created. 1. If the PDATA port is in an EPN, this is most probably caused by Center Stage maintenance interactions. The Center Stage would include the Switch Node Interface (SNI), Expansion Interface (EI) and DS1C boards. Clear any problems in these boards before continuing. 2. Retry at one minute intervals for a maximum of 3 times. 3. If the test continues to abort, escalate the problem.
1139	ABORT	The Packet Bus in this port network is out-of-service. 1. Retire the alarm associated with the Packet Bus. Please refer to the maintenance section on the packet bus for details. 2. Retry the command when the alarm associated with the Packet Bus is retired.
1141	ABORT	The Packet Interface, PKTINT, Circuit Pack (TN1655) is out-of-service. 1. Refer to the repair procedures for the PKTINT circuit pack to put the circuit pack back into service. 2. Retry the command when the alarm associated with the Packet Interface is retired.

Continued on next page

Table 9-255. TEST #558 LAPD Connectivity Test — *Continued*

Error Code	Test Result	Description/ Recommendation
1144	ABORT	The Packet Bus in the Port Processor Network (Network 1) is alarmed. 1. Retire the alarm associated with the Packet Bus in the Port Processor Network. Please refer to the maintenance section on the packet bus for details. 2. Retry the command when the alarm associated with the Packet Bus is retired.
2012	ABORT	Internal System Error. 1. Retry the command at 1-minute intervals for a maximum of 3 times. 2. If the test continues to abort, escalate the problem.
1	FAIL	Response to the test was not received for the PDATA circuit pack within the allowable time period. 1. Retry the command at 1-minute intervals a maximum of 3 times. 2. **reset board UUCSS** if the other ports on the board are not in use (Yellow LED is off or run the **status data-module extension** command). 3. Retry the command at 1-minute intervals a maximum of 3 times. 4. Replace the circuit pack.
2	FAIL	The received test packet from the PDATA port is different than the test packet transmitted to it. 1. If the test fails 3 times, **reset board UUCSS** if the other ports on the board are not in use (Yellow LED is off or run the **status data-module extension** command). 2. If the test continues to fail, replace the circuit pack.
	PASS	The PDATA port is able to terminate a LAPD link.

PDATA Port Local Loop-Around Test (#602)

This test is destructive.

This test verifies the per port circuitry on the PDATA circuit pack. This test is executed by the PDATA circuit pack on command by the switch. The loop-back is done internal to the circuit pack at point "A," shown in Figure 9-74 below. Failure of this test indicates an on-board fault associated with the port hardware on the circuit pack.

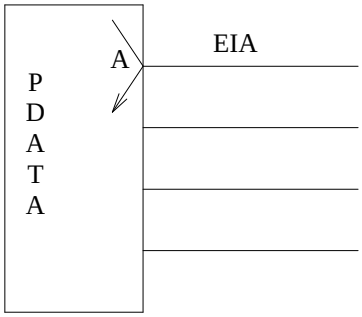

Figure 9-74. Configuration for Port Local Loop-Around Test

Table 9-256. TEST #602 PDATA Port Local Loop-Around Test

Error Code	Test Result	Description/ Recommendation
1000	ABORT	The port is in use for a call. Use **status data-module extension** command to determine when the port is available for testing. 1. Retry the command when the port is idle. The port can be made idle by executing the **busyout port UUCSSpp** command. This command is destructive causing all calls and links associated with the port to be torn down.

Continued on next page

Table 9-256. TEST #602 PDATA Port Local Loop-Around Test — *Continued*

Error Code	Test Result	Description/ Recommendation
1006	ABORT	Port is out-of-service. 1. Run **status data-module extension** to check if the port is busied out. Run **release port UUCSS** to free it, re-run the test. 2. Refer to the PKT-BUS maintenance section and fix any problems that are related to the packet bus. 3. If the port does not come back into service, escalate the problem.
2000	ABORT	Response to the test was not received for the PDATA circuit pack within the allowable time period. 1. Retry the command at 1-minute intervals a maximum of 3 times. 2. **reset board UUCSS** if the other ports on the board are not in use (Yellow LED is off or run the **status data-module extension** command). 3. Retry the command at 1-minute intervals a maximum of 3 times. 4. Replace the circuit pack.
2012	ABORT	Internal System Error. 1. Retry the command at 1-minute intervals a maximum of 3 times. 2. If the test continues to abort, escalate the problem.
	FAIL	The PDATA circuit pack has detected a failure in the execution of the test. 1. If the test fails 3 times, **reset board UUCSS** if the other ports on the board are not in use (Yellow LED is off or run the **status data-module extension** command). 2. If the test fails again, replace the circuit pack.
	PASS	The PDATA on-board loop-around test for the port has passed verifying the integrity of the per port circuitry.

System Port Connectivity Test (#603)

This test is destructive.

This test verifies the capability to communicate between the PDATA and the Data Line (TN 726B) ports of a System Port member. A System Port requires the PDATA port and the Data Line port to be wired together. Failure of this test may indicate faults with the wiring on PDATA port. Thus an off-board alarm is raised.

Since this test is applicable only to ports that are configured as a System Port, the switch aborts the test if the port is not configured as a System Port.

The switch aborts this test if calls associated with the port are in progress. If the ports are in use but tests must be run, the port can be busied out using the **busyout port UUCSSpp** command. Release the port when the tests are done. If a problem is fixed, the associated alarms will not be resolved until the port is released.

Table 9-257. TEST #603 System Port Connectivity Test

Error Code	Test Result	Description/ Recommendation
11	ABORT	The Data Line port could not be setup for this test.
2100	ABORT	Could not allocate Data Line resources 1. Determine the Data Line port associated with the PDATA port. 2. Run **test port UUCSSpp**. If any of the Data Line port tests fail, resolve these problems first. 3. If the problem persists, check the port admin and wiring 4. Verify that the Data Line port is not busied out (**status data-module extension**) or not installed. 5. If the test continues to abort, escalate the problem.
1000	ABORT	The PDATA or Data Line port is in use for a call or maintenance tests are already running on these ports. 1. Retry the command when the port is idle. The port may be forced to the idle state by executing the **busyout port UUCSSpp** command. This command is destructive causing all calls and links associated with the port to be torn down.

Continued on next page

Table 9-257. TEST #603 System Port Connectivity Test — *Continued*

Error Code	Test Result	Description/ Recommendation
1005	ABORT	The configuration for this test is incorrect. 1. This is the expected test result for PDATA ports which have not been administered as a System Port. 2. If the PDATA port is supposed to be configured as System Port, make the necessary modifications on the port administration form **change data-module extension**.
1115	ABORT	The PDATA port resources could not be allocated. 1. Run the **busyout port UUCSSpp** 2. Run the test again 3. Retry the command at 1-minute intervals for a maximum of 3 times. 4. If the test continues to abort, escalate the problem. 5. Release the port when done.
2012	ABORT	System Call Failed
2031	ABORT	Uplink messages software failed.
2500	ABORT	Internal System Error. 1. Retry the command at 1-minute intervals for a maximum of 3 times. 2. If the test continues to abort, escalate the problem.

Continued on next page

Table 9-257. TEST #603 System Port Connectivity Test — *Continued*

Error Code	Test Result	Description/ Recommendation
7	FAIL	Wiring does not match administration.
8	FAIL	Invalid test message sequence.
10	FAIL	Data Line port did not reset correctly.
11	FAIL	PDATA port Data Terminal Ready (DTR) did not reset correctly.
12	FAIL	PDATA port did not reset correctly.
2000	FAIL	Test timed out, most probably the administered ports are not connected correctly. For the above failure codes, use the following steps to correct the problem. 1. Enter the commands **list data-module** and **status data-module extension** on the G3-MT to find the corresponding Data Line port number and PDATA port number. Check the wiring between the PDATA port and the Data Line port. Look for loose connections, mis-wiring or broken wires. 2. Retry test a maximum of 2 times, no need to wait between tests. 3. If the test still fails, and the other ports on the circuit pack are not in use, enter **reset board UUCSS**. (Use **status data-module** extension or LED indicators to determine if other ports are idle). 4. Retry test a maximum of 2 times. 5. Replace the PDATA board. 6. Retry test a maximum of 2 times. 7. Replace the Data Line circuit pack. 8. Retry test a maximum of 2 times. 9. If the test continues to fail, escalate the problem.
	PASS	The PDATA port and the Data Line port of the System Port feature are wired together as administered.

PDMODULE (Processor Data Module) TDMODULE (Trunk Data Module)

MO Name As It Appears in Alarm Log	Alarm Level	Initial System Technician Command to Run (a)	Full Name of MO
PDMODULE (b)	MINOR	test port *UUCSSpp* l	Processor Data Module
PDMODULE	WARNING	test port *UUCSSpp* s	Processor Data Module
TDMODULE (b)	MINOR	test port *UUCSSpp* l	Trunk Data Module
TDMODULE	WARNING	test port *UUCSSpp* s	Trunk Data Module

a. UU is the universal cabinet number (1 for PPN, 2 - 44 for EPNs). C is the carrier designation (A, B, C, D, or E). SS is the number of the slot in which the circuit pack resides (01 to 21). pp is the two digit port number (01, 02, ...).

b. Digital Terminal Data Modules (DTDM), and Data Adaptors (DA) in linked mode are considered part of the Digital Line maintenance object. See the the DIG-LINE section for maintenance of these devices. DAs in stand-alone mode are included in PDMODULE.

   Some of the alarms that are logged due to PDMODULE and TDMODULE test failures may be related to circuit pack problems reported during DIG-BD testing. Refer to XXX-BD (Common Port Board Maintenance) for information on testing Digital Line circuit packs.

The PDMODULE and TDMODULE maintenance objects monitor and test Digital Line circuit pack ports that are connected to Data Communications Equipment (DCE) or Data Terminal Equipment (DTE). DCE includes processor data modules (MPDM) and Data Adaptors (DA). DTE include trunk data modules (DTE). These stand-alone data modules provide interfaces between DCP ports on the Digital Line circuit packs and data equipment such as terminals, host computers, and data modems. (See the following list and Figure 9-75 on page P-33.) Data modules are used for dial-up and permanent circuit-switched data calls.

Digital Line circuit packs also connect to digital terminal data modules (DTDMs), which work in conjunction with a voice terminal. Those configurations are covered by the DIG-LINE maintenance object. Circuit pack-level maintenance is covered by DIG-BD whose strategy is described in the XXX-BD section of this chapter.

Digital line circuit packs include the TN754, TN754B, TN413, TN2136. See DIG-LINE for more information on the characteristics of these circuit packs.

Stand-Alone DCP Data Modules

There are two types of stand-alone DCP data modules:

Stand-Alone DCP Data Modules		
Type	**Name***	**Interfaces to:**
MPDM	Modular Processor Data Module	DTE (data terminals, host computers, printers, etc)
MTDM	Modular Trunk Data Module	DCE (modems, data modules, etc)

* Early versions of these data modules were referred to as PDMs and TDMs, respectively. Later models are designed to provide a variety of interfaces by using interchangeable modules and are thus called modular data modules. Both types are supported by the tests described in this section.

Data Adaptors

TN2136 circuit packs use IDCP signaling and a DAA2 Data Adaptor (DA) to interface to DTE. DAs can operate in either of two modes which are covered by different maintenance objects:

Data Adaptor Modes

DA Mode	Administered as:	Endpoint	Maintenance Object
Stand-Alone	PDM	data endpoint only	PDMODULE
Linked	DTDM	IDT1/2* and optional data terminal	DIG-LINE

* IDT1/2: Italtel Digital Telephone, Model 1 or 2 (also known as Digital Telephones TD7210 and TD7206).

Configurations and Maintenance

In the following discussion, the general term data module refers to MPDMs, MTDMs, and DAs. The PBX loop or digital link between a data module and the Digital Line port supports two logical information channels and one signaling channel. Data modules generally use the primary information channel for data communications and the signaling channel for dialing and call supervision. With 4-wire DCP, the secondary information channel can be used to support a second data module on a shared port.

Besides being used for data calls between terminals, computers, and data communications equipment, data modules also serve as interfaces to equipment associated with system features such as System Administration, Station Message Detailed Recording, Message Center Service, Automatic Call Distribution, Distributed Communications System, and Audio Information Exchange. Maintenance for data modules associated with these latter services are covered by other maintenance objects such as PMS-PRNT, JNL-PRNT, and PMS-LINK.

Maintenance of data modules is closely related to and interacts with Digital Line circuit pack maintenance, and test results for data modules can be affected by the health of the Digital Line circuit pack. Keep this interaction in mind when investigating customer-reported problems with data modules.

Data modules provide a variety of option switches to allow the customer to select data rates, parity, keyboard dialing, local, and remote loop back, etc. (The DAA2 Data Adaptor has an AT (Hayes) type interface that allows selection of the above parameters as well as mode — linked or stand-alone.) An incorrect selection will

not necessarily cause errors, alarms or test failures, but it can result in service disruption. Refer to the installation manual provided with the data module for more information about those options.

This discussion occasionally refers to a station's service state, which is defined as follows:

Out-of-Service	The port, and thus the data module, have been removed from service. Causes for this include busyout of the port, removal of the Digital Line circuit pack and failure of the NPE Crosstalk Test (#9).
Disconnected	The port is administered but the associated digital link does not respond. An administered port is put in a disconnected state after a system reboot or circuit pack insertion. This state persists until a link-reset-pass message is received from firmware on the circuit pack.
In-Service	When switch software receives a link-reset-pass message from the port, the port is placed in service. If the link-reset-pass message is missed, and an off-hook message is received while the port is in the disconnected state, maintenance software will run an ID request test and put the port into service upon receiving a correct response.

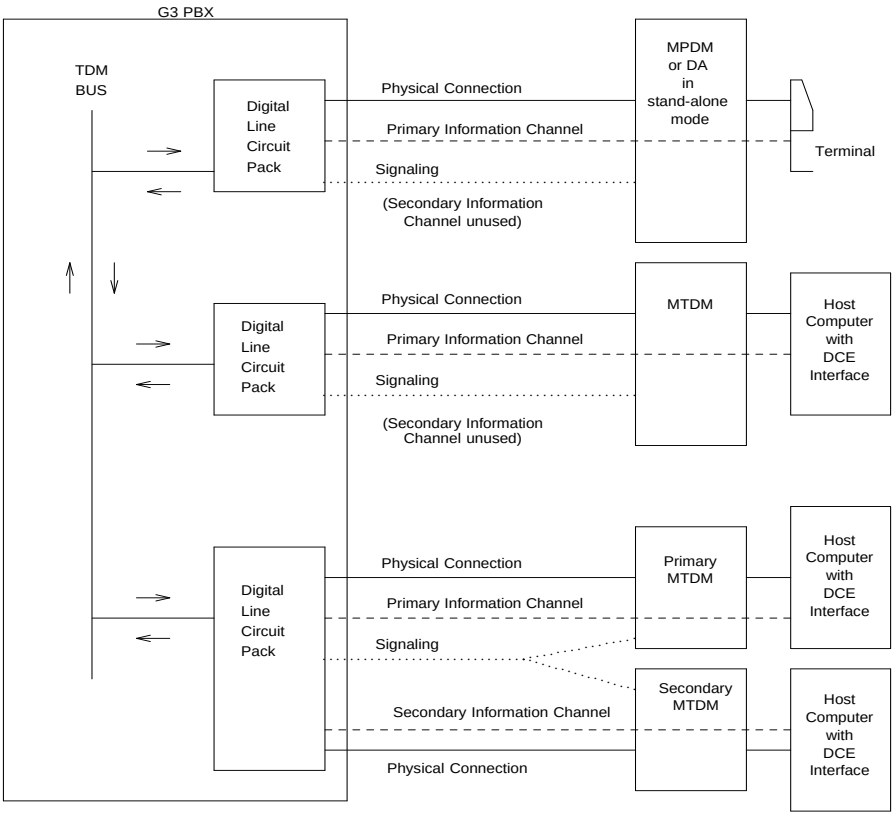

Figure 9-75. Typical Data Module Configurations

Hardware Error Log Entries and Test to Clear Values

PDMODULE, TDMODULE Error Log Entries

Error Type	Aux Data	Associated Test	Alarm Level	On/Off Board	Test to Clear Value
0(a)	0	None			
1(b,n)	40987	None	WARNING	OFF	
1(c,n)	1 to 20	None	WARNING	OFF	
15(d)	Any	None			
18(e)	0	busyout port *UUCSSpp*	WARNING	OFF	release port *UUCSSpp*
257(f)	40971	None			
513	0	Data Module Audits (#17)	WARNING	OFF	test port *UUCSSpp* sh r 6
769(g,n)	40988	None	WARNING	OFF	
1281	Any	Data Module Audits (#17)	WARNING	OFF	test port *UUCSSpp* sh r 4
1537(h,n)	40968	None	WARNING	OFF	
1793		Information Channel and Control Channel Loop Around (#13)	MINOR	ON	test port *UUCSSpp* l r 3
2049		NPE Crosstalk (#9)	MINOR	ON	test port *UUCSSpp* l r 3
2304(i)		None			
2305(j)	32770	None			
2305(k)	40967	None			
2561(l)	Any	Data Module Internal Loop Around (#175)	WARNING	OFF	test port *UUCSSpp* l r 5
3841(m)		None			

Notes:

a. Error type 0 appears in the Error Log only if a Digital Line circuit pack that has ports administered has been removed since the Error Log was last cleared. Make sure that the circuit pack has been re-inserted.

b. Error type 1 with aux data 40987 indicates an off-board problem detected by the port circuit, and may result in a noisy port or link. See note *n* for recommendations.

c. Error type 1 with aux data of 1 to 20 is logged when at least 15 off-board problems have been detected with the link to the data module. Each error detected increments an on-board counter. The aux data gives the value of this counter divided by 15. The user could experience a noisy port or link. See note ''n'' for recommendations.

d. Error type 15 is an internal that occurs when an audit request fails.

e. Error type 18 is logged when the port in question is demand busied out Make sure that the port is released from busy out.

f. Error type 257 indicates problems with transmitting to the data module. This is usually an on-board problem and can be ignored if no user complaints are received. Otherwise, check for faulty wiring.

g. Error type 769 indicates that EPF has been turned off due to the overcurrent condition at the data module. See the recommendations in note *n*. This may also be caused by the the PTC being in the ''tripped'' position due to a short on the power line. You can correct this by removing the short, unplugging the data module from the wall for about 30 seconds, and plugging it back in.

h. Error type 1537 indicates that an in-line maintenance error has generated an off-board warning due to some problem with the link to the data module. This can be ignored if no user complaints are received. Otherwise, see note *n* for recommendations.

i. Error type 2304 indicates an internal error. No action is necessary.

j. Error type 2305 with aux data 32770 indicates that the data equipment went off-hook while the associated link was being initialized (in a disconnected state). Use the **status data-module** command to determine the state of the data module. The off-hook should have changed the service state to in-service. No action is necessary.

k. Error type 2305 with aux data 40967 indicates that the link between the circuit pack and the data module has been reset successfully. The link is normally reset when the circuit pack associated with an administered port is first plugged in (assuming that the data module is already in place and connected to the associated port), when a port is first administered (assuming the associated circuit pack is plugged in and that the data module is connected to the associated port), or when a data module is first connected to an administered port. No system technician action is necessary.

l. Error type 3841 indicates that the downlink buffer on the circuit pack has overflowed. No action is necessary.

m. A DCP endpoint may have been disconnected.

n. Make sure the data module is connected and operating properly. Check for faulty wiring. If necessary, reduce the length of the cable between the data module and the switch to 5000 ft for 24-gauge wire or 4000 ft for 24-gauge wire. Refer to *DEFINITY Communications System Generic 1 and 3 - Installation and Test*, 555-230-104.

If the problem still exists, replace the circuit pack. Once the problem has been resolved, the alarm will be retired in 60 minutes (90 min for error 1537). (These error counters use the leaky bucket mechanism.)

The DA module is not phantom-powered from the port. Thus when it is in linked mode, its range is limited by the Italtel digital phone's limit: 0.7 Km (2300) ft on 26-gauge wire or 1.8 Km (5900) ft on 22-gauge (0.6 mm) wire. If in stand-alone mode, it is limited by the maximum length of loop allowed from the Digital Line Interface (DLI) component: up to 3.5 Km (2 miles) on 22-gauge (0.6 mm) wire.

System Technician-Demanded Tests: Descriptions and Error Codes

Always investigate tests in the order presented in the table below when inspecting errors in the system. By clearing error codes associated with the *Data Module Internal Loop Around Test,* for example, you may also clear errors generated from other tests in the testing sequence.

Order of Investigation	Short Test Sequence	Long Test Sequence	D/ND*
Data Module Internal Loop Around Test (#175)		X	ND
Digital Port Board Network Processing Element Crosstalk Test (#9)		X	ND
Port Circuit Information Channel and Control Channel Loop Around Test (#13)		X	ND
Data Module Audits Test (#17)	X	X	ND

* D = Destructive; ND = Nondestructive

NPE Crosstalk Test (#9)

One or more Network Processing Elements (NPEs) reside on each circuit pack with a TDM BUS interface. The NPE controls port connectivity and gain, and provides conferencing functions on a per port basis. The NPE Crosstalk Test verifies that this port's NPE channel talks on the selected time slot and never crosses over to time slots reserved for other connections. If the NPE is not working correctly, one-way and noisy connections may be observed. If a secondary data module is assigned, it is tested after the primary data module. If either test fails, both data modules are taken out of service. This test usually run only during the long test sequence and takes about 20 to 30 seconds to complete.

Table 9-258. TEST #9 NPE Crosstalk Test

Error Code	Test Result	Description/ Recommendation
1000	ABORT	System resources required to run this test are not available. The port may be busy with a valid call. Use the **display port UUCSSpp** command to determine the extension of the data module port. Use the **status data-module** command to determine the service state of the port. If the service state indicates that the port is in use, then the port is unavailable for certain tests. (See Chapter 8, "Maintenance Commands", for a full description of all possible states). You must wait until the port is idle before retesting. 1. If the port status is idle, then retry the command at 1-minute intervals a maximum of 5 times. 2. If the test continues to abort escalate the problem.
1001	ABORT	System resources to run this test are not available. 1. Retry the command at 1-minute intervals a maximum of 5 times. 2. If the test continues to abort escalate the problem.

Continued on next page

Table 9-258. TEST #9 NPE Crosstalk Test — *Continued*

Error Code	Test Result	Description/ Recommendation
1002	ABORT	The system could not allocate time slots for the test. The system may be under heavy traffic conditions or it may have time slots out-of-service due to TDM-BUS errors. Refer to TDM-BUS Maintenance to diagnose any active TDM-BUS errors. 1. If system has no TDM-BUS errors and is not handling heavy traffic, repeat test at 1-minute intervals a maximum of 5 times. 2. If the test continues to abort, escalate the problem.
1003	ABORT	The system could not allocate a tone receiver for the test. The system may be oversized for the number of tone detectors present or some tone detectors may be out-of-service. 1. Look for TTR-LEV errors in the Error Log. If present, refer to TTR-LEV Maintenance documentation. 2. Look for TONE-PT errors in the Error Log. If present, refer to TONE-PT Maintenance documentation. 3. If neither condition exists, retry the test at 1-minute intervals a maximum of 5 times. 4. If the test continues to abort, escalate the problem.
1004	ABORT	The port may be busy with a valid call. Use the **display port UUCSSpp** command to determine the extension of the data module port. Use the **status data-module** command to determine the service state of the port. If the service state indicates that the port is in use, then the port is unavailable for certain tests. (See Chapter 8, "Maintenance Commands", for a full description of all possible states). You must wait until the port is idle before retesting. 1. Retry the command at 1-minute intervals a maximum of 5 times. 2. If the test continues to abort and the port is not in use, escalate the problem.

Continued on next page

Table 9-258. TEST #9 NPE Crosstalk Test — *Continued*

Error Code	Test Result	Description/ Recommendation
1020	ABORT	Test disabled via background testing. Use **status data-module** command to determine when the data module is available for testing.
2000	ABORT	Response to the test request was not received within the allowable time period. 1. Retry the command at 1-minute intervals a maximum of 5 times. 2. If the test continues to abort escalate the problem.
2020	ABORT	The test did not run due to a previously existing error on the specific port or a more general circuit pack error. 1. Examine Error Log for existing errors against this port or the circuit pack and attempt to diagnose the previously existing error.
2100	ABORT	Could not allocate the necessary system resources to run this test. 1. Retry the command at 1-minute intervals a maximum of 5 times. 2. If the test continues to abort escalate the problem.
1, 2	FAIL	The NPE of the tested port was found to be transmitting in Error Log. This will cause noisy and unreliable connections. Failure code 1 indicates that the Crosstalk Test failed on the primary channel. Failure code 2 indicates that the Crosstalk Test failed on the secondary channel. 1. Replace the circuit pack.
	PASS	The port is correctly using its allocated time slots. 1. To be sure that this is not an intermittent problem, repeat this test up to a maximum of 10 times and verify that it continues to pass. 2. If complaints still exist, examine the data module, connections, and wiring.

Information and Control Channel Local Loop Test (#13)

This is a set of four tests that check the operation of the information and control channels used between the SPE and the Digital Line port circuit. This is an Internal Loop Around test only and does not check building wiring. See Test #175 for external loop around tests to the data module.

The SPE first sends a message to the on-board microprocessor to loop around both the information and control channels for the port. Then, the primary information channel loop back test is run. The test is performed by sending a digital count from the Tone/Clock circuit pack on the primary channel time slot and receiving the same digital count with a General Purpose Tone Detector. The digital count looks like transparent data to the on-board microprocessor.

With the port still in loop-around mode, the S channel Loop Around Test is performed next. This test consists of sending four different transparent patterns to the on-board microprocessor, receiving them back, and comparing them.

The third test is a Loop Around Test for the secondary information channel. It is performed only if a secondary data module is assigned to the port.

The fourth test is a Conference Test of the primary channel. This test is the same as the Analog Line Conference Test #6.

Only one result is reported for the three tests run. If any test fails or aborts, the sequence is stopped.

Table 9-259. TEST #13 Information and Control Channel Local Loop Test

Error Code	Test Result	Description/ Recommendation
	ABORT	Internal System Error 1. Retry the command at 1-minute intervals a maximum of 5 times. 2. If the test continues to abort, escalate the problem.

Continued on next page

Table 9-259. TEST #13 Information and Control Channel Local Loop Test — *Continued*

Error Code	Test Result	Description/ Recommendation
1000	ABORT	System resources required to run this test are not available. The port may be busy with a valid call. Use the **display port UUCSSpp** command to determine the data module extension. Then use **status data module** command with the extension number to determine the service state of the data module. If the service state indicates that the data module is in use, then the port is unavailable for certain tests. You must wait until the port is idle before retesting. 1. If the port status is idle, then retry the command at 1-minute intervals a maximum of 5 times. 2. If the test continues to abort, escalate the problem.
1001	ABORT	System resources required to run this test are not available. 1. Retry the command at 1-minute intervals a maximum of 5 times. 2. If the test continues to abort, escalate the problem.
1002	ABORT	The system could not allocate time slots for the test. The system may be under heavy traffic conditions or it may have time slots out-of-service due to TDM-BUS errors. Refer to TDM-BUS Maintenance to diagnose any active TDM-BUS errors. 1. If the system has no TDM-BUS errors and is not handling heavy traffic, repeat the test at 1-minute intervals a maximum of 5 times. 2. If the test continues to abort, escalate the problem.

Continued on next page

Table 9-259. TEST #13 Information and Control Channel Local Loop Test — *Continued*

Error Code	Test Result	Description/ Recommendation
1003	ABORT	The system could not allocate a tone receiver for the test. The system may be oversized for the number of tone detectors present or some tone detectors may be out-of-service. 1. Look for TTR-LEV errors in the Error Log. If present, refer to TTR-LEV Maintenance documentation. 2. Look for TONE-PT errors in the Error Log. If present, refer to TONE-PT Maintenance documentation. 3. If neither condition exists, retry the command at 1-minute intervals for a maximum of 5 retries. 4. If the test continues to abort, escalate the problem.
1004	ABORT	The port was seized by a valid call during the test. The test has been aborted. Use the **display port UUCSSpp** command to determine the data module extension. Then use **status data module** command with the extension number to determine the service state of the data module. If the service state indicates that the data module is in use, then the port is unavailable for certain tests. You must wait until the port is idle before retesting.
2000	ABORT	Response to the test request was not received within the allowable time period. 1. Retry the command at 1-minute intervals a maximum of 5 times. 2. If the test continues to abort, escalate the problem.
2100	ABORT	System resources required for this test are not available. 1. Retry the command at 1-minute intervals a maximum of 5 times. 2. If the test continues to abort, escalate the problem.

Continued on next page

Table 9-259. TEST #13 Information and Control Channel Local Loop Test — *Continued*

Error Code	Test Result	Description/ Recommendation
7	FAIL	Conference test failed on the primary information channel. In some cases, user may not notice disruption in service. In extreme cases, conferencing feature may not work at all.
14	FAIL	The primary information channel is not transmitting properly. User impact may range from noticing nothing to not being able to use this port.
15	FAIL	The control channel between the processor and Digital Line circuit pack is not transmitting properly. This can cause a wide range of effects. The user may notice nothing or the port may be totally unusable. This could also disrupt other users. 1. Run circuit pack tests to check the Tone Generator circuit pack and the Tone Detector circuit pack using **test board UUCSS short** command. 2. Resolve any problems that are detected on the Tone Generator circuit pack or Tone Detector circuit pack. 3. If the Tone Generator and Tone Detector circuit packs are functioning properly, and the test still fails, replace the Digital Line circuit pack.
16	FAIL	The secondary information is not transmitting properly. This can cause a wide range of effects. The user may notice nothing or the port may be totally unusable. 1. To be sure that this is not an intermittent problem, repeat this test up to a maximum of 10 times to make sure it continues to pass. 2. If complaints still exist (poor data transmission), examine the data module, connections, and wiring.
	PASS	Information and Control Channel Local Loop Test passed. All channels are transmitting properly

Data Module Audits Test (#17)

This is a series of six tests that are classified as hardware audits. The processor sends messages to the on-board microprocessor to perform the following tests:

- Switchhook Inquiry — This is an update of the processor's software records based on the on-hook/off-hook status of the data module.
- Bad Scan Inquiry — A message is sent uplink that contains a count generated by certain events relating to the digital loop's (link) conditions. This could be an indication of communication problems between the processor and digital port board.
- EPF inquiry — The status of the Electronic Power Feed is sent uplink. EPF is not used for data modules.
- ID Request — A request is made to the data module for its status. The data module sends its configuration information and health information back. This information is checked and a pass/fail result is provided.
- Ringer Update — This updates the data module's ringer state according to processor records.
- Translation Update — This is a message normally used with digital stations to refresh the default value that causes the station to send touch tones only in the primary information channel. This test is not used with data modules.

Table 9-260. TEST #17 Data Module Audits Test

Error Code	Test Result	Description/ Recommendation
1	ABORT	Switchhook audit timed out. 1. Verify the data module is connected to the PBX and repeat the test. 2. If the test aborts, replace the data module and repeat the test. 3. If the test continues to abort, replace the circuit pack and repeat the test. 4. If the test continues to abort, escalate the problem.
2	ABORT	ID request fails, health bit is defective, or no response from on-board microprocessor. 1. Verify that the correct data module type (PDM versus TDM) is administered. 2. If the test aborts, replace the data module and repeat the test. 3. If the test aborts, replace the circuit pack and repeat the test. 4. If the test continues to abort, escalate the problem.
3	ABORT	No response from EPF audit.
4	ABORT	Internal System Error 1. Resolve any outstanding circuit pack maintenance problems. 2. Retry the command at 1-minute intervals a maximum of 5 times. 3. If the test continues to abort, escalate the problem.

Continued on next page

Table 9-260. TEST #17 Data Module Audits Test — *Continued*

Error Code	Test Result	Description/ Recommendation
5	ABORT	Ringer update aborted (data module not in the in-service state) 1. Verify that the data module is powered (power LED on). 2. Make sure data module is connected to the building wiring, check for faulty wiring, check for faulty data module. 3. Retry the command at 1-minute intervals a maximum of 5 times. 4. Replace the Data Module and repeat the test. 5. If the test continues to abort, replace the Digital Line circuit pack and repeat the test. 6. If the test continues to abort, escalate the problem.
6	ABORT	Data module translation update aborted. 1. Verify the data module is connected to the PBX. 2. Retry the command at 1-minute intervals a maximum of 5 times. 3. If the test continues to abort, escalate the problem.
1000	ABORT	System resources required to run this test are not available. 1. Retry the command at 1-minute intervals a maximum of 5 times. 2. If the test continues to fail, escalate the problem.
1392	ABORT	This port is currently a TTI port and the test will not execute on it. 1. Verify that the port is a TTI port using either the **display port** command (the display shows that the port is a TTI port) or the **list config** command (the display shows a t for the port). 2. If either **list config** or **display port** indicate that the port is *not* a TTI port, escalate the problem. If both commands indicate that the port is a TTI port, the abort is correct, and no action is necessary.

Continued on next page

Table 9-260. TEST #17 Data Module Audits Test — *Continued*

Error Code	Test Result	Description/ Recommendation
2000	ABORT	Response to the test request was not received within the allowable time period.
	FAIL	Internal System Error 1. Retry the command at 1-minute intervals a maximum of 5 times. 2. If the test continues to fail, escalate the problem.
	PASS	Data Module Audits passed. This digital port circuit pack is functioning properly. 1. If complaints still exist, investigate by using other port tests, and by examining the data module options, wiring, and connections.

Data Module Internal Loop Around Test (#175)

This test verifies that a data message can be sent from the PBX, through the building wiring, through an internal loop-around path in the data module, and back to the PBX. This path is illustrated below.

For this test to run, the “Remote Loop-Around Test’’ field on the Data Module administration form must be set to ‘‘y,’’ indicating that the data module endpoint supports the test.

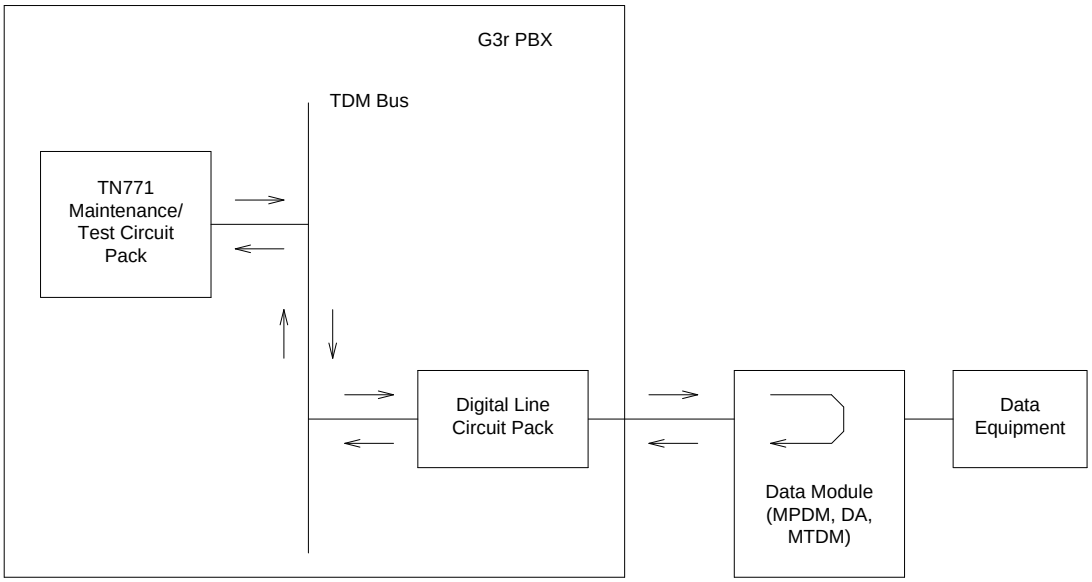

Figure 9-76. Internal Loop Around Test

A signaling message is sent through the digital port circuit pack to the data module, requesting it to enter loop-around mode. A test pattern is then sent from the TN771 Maintenance/Test circuit pack, over the path illustrated above, and back to the TN771 where it is checked for consistency.

The test aborts if any of the following local PBX resources are not available: a digital port on the TN771 (there are two such digital ports, but only one may be used at a time), two TDM time slots and an idle digital port connected to the data module.

Table 9-261. TEST #175 Data Module Internal Loop Around Test

Error Code	Test Result	Description/ Recommendation
1000	ABORT	System resources required to run this test are not available. The port may be in use on a valid call. Use **status data-module** to determine when the port is available for testing. 1. Retry the command at 1-minute intervals a maximum of 5 times. 2. If the test continues to abort and the port is not in use, escalate the problem.
1005	ABORT	Loop around testing is not enabled on the data module administration form. 1. Set ‘‘Loop-Around Test’’ field to ‘‘y’’ on the data module administration form.
1042	ABORT	The port under test is a TTI port and thus has only default translations and no assigned extension. The test requires an extension assigned to the port being tested. 1. If there is a need to execute the test on this particular port, then you must fully administer the port so that is has an assigned extension.
1180	ABORT	A Maintenance/Test Circuit pack digital port is not available to carry out the test. 1. Check to see if the Maintenance/Test digital ports are present (use the **list config board** command and look for ports 02 and 03). 2. If the digital ports (02 and 03) on the M/T-BD are not present, refer to the M/T-DIG section. 3. If the digital ports are present, try the command again at 1-minute intervals up to 5 times. 4. If the test continues to abort, escalate the problem.
1181	ABORT	No time-slots available to connect digital ports for the test. 1. Try the command again at 1-minute intervals up to 5 times. 2. If the test continues to abort, escalate the problem.

Continued on next page

Table 9-261. TEST #175 Data Module Internal Loop Around Test — *Continued*

Error Code	Test Result	Description/ Recommendation
1182	ABORT	Internal System Error. Failed to connect the digital ports with time-slots. 1. Retry the command at 1-minute intervals a maximum of 5 times. 2. If the test continues to abort, escalate the problem.
1340	ABORT	No Maintenance/Test digital port is currently available to perform this test. 1. Use **list config** to determine whether any Maintenance/Test digital ports (ports 02 and 03 on the Maintenance/Test circuit pack) are present in the system. Because at least one Maintenance/Test circuit pack must always be present in the PPN of any G3r system, there should be at least two such ports present. If the ports are present, proceed to step 2. Otherwise, determine why no ports appear in the **list config** display. Refer to M/T-DIG and M/T-BD maintenance documentation. 2. Look for M/T-DIG errors in the Error Log. If present, refer to M/T-DIG maintenance documentation. 3. If the ports are present and no errors are logged against them, retry the command at 1-minute intervals a maximum of 5 times. 4. If the test continues to abort, replace the Maintenance/Test circuit pack. 5. If test still aborts after replacement, escalate the problem.

Continued on next page

Table 9-261. TEST #175 Data Module Internal Loop Around Test — *Continued*

Error Code	Test Result	Description/ Recommendation
1392	ABORT	This port is currently a TTI port and the test will not execute on it. 1. Verify that the port is a TTI port using either the **display port** command (the display shows that the port is a TTI port) or the **list config** command (the display shows a "t" for the port). 2. If either **list config** or **display port** indicate that the port is **not** a TTI port, escalate the problem. If both commands indicate that the port is a TTI port, the abort is correct for the test, and no action is necessary.
2005	ABORT	The handshake between the Maintenance/Test digital port and the Data Module failed. 1. Look for M/T-DIG errors in the Error Log. If present, refer to M/T-DIG section. 2. If test still aborts on retry, check physical connection of data module under test. Make sure the switches are on NORM, OFF (between REM_LP and LOC_ LP), 9600, and ASYN. 3. If the test still aborts, replace the Data Module. 4. If the test continues to abort after replacement, escalate the problem.
2312	ABORT	The Loop Around Test did not complete, failed to receive loop-back data. 1. Check for M/T-DIG error in the Error Log. If present, refer to M/T-DIG section. 2. Retry the test, if still aborts, replace the Data Module. 3. If the test aborts again, replace the Digital Line Circuit Pack. 4. If the test continues to abort after replacement, escalate the problem.

Continued on next page

Table 9-261. TEST #175 Data Module Internal Loop Around Test — *Continued*

Error Code	Test Result	Description/ Recommendation
2313	ABORT	The Maintenance/Test digital port allocated for this test did not respond to downlinked message. 1. Look for M/T-DIG errors in the Error Log. If present, refer to M/T-DIG section. 2. Retry the command at 1-minute intervals a maximum of 5 times. 3. If the test continues to abort, replace the MTB. 4. If the test continues to abort after replacement, escalate the problem.
2314	ABORT	Data Module did not respond to downlinked message. 1. Check the wiring of the Data Module under test. 2. Verify that the Data Module is powered (power LED on). 3. Make sure the switches are on NORM, OFF (between REM_LP and LOC_LP), 9600, and ASYN. 4. If the test still aborts, replace the Date Module. 5. If the same abort code appears, replace the Digital Line Circuit Pack which is connect to the Data Module. 6. If test continues to abort after replacement, escalate the problem.
2500	ABORT	Internal System Error 1. Retry the command at 1-minute intervals a maximum of 5 times. 2. If the test continues to fail, escalate the problem.

Continued on next page

Table 9-261. TEST #175 Data Module Internal Loop Around Test — *Continued*

Error Code	Test Result	Description/ Recommendation
	FAIL	Data received from remote loop back does not match data sent. 1. Check for faulty wiring. 2. Replace the data module and repeat the test. 3. If the test fails, replace the Digital Line circuit pack associated with the data module and repeat the test. 4. If the test continues to fail, escalate the problem.
	PASS	Data Module Loop Around Test passed.

PE-BCHL (PRI Endpoint Port)

MO Name As It Appears in Alarm Log	Alarm Level	Initial System Technician Command to Run (a)	Full Name of MO
PE-BCHL (a)	MINOR	test port *UUCSSpp* l	PRI Endpoint Port
PE-BCHL	WARNING	test port *UUCSSpp* sh	PRI Endpoint Port

a. For additional repair information, see also "UDS1-BD (UDS1 Interface Circuit Pack)" in this chapter and "Troubleshooting ISDN-PRI Endpoints (Wideband)" in Chapter 5, "Responding to Alarms and Errors".

A PRI Endpoint provides ISDN-PRI (Primary Rate Interface) connections application equipment or terminal adapters that terminate ISDN-PRI. The equipment or terminal adapters are connected to the switch via the TN464C/D UDS1 interface circuit pack. This maintenance object monitors the PRI endpoint port hardware on the UDS1 circuit pack by logging hardware errors, running tests for port initialization, and running periodic and scheduled maintenance and demand tests.

Wideband Switching

Wideband switching supports end-to-end connectivity between customer endpoints at data rates from 128 to 1536 kbps over T1 facilities and to 1984 kbps over E1 facilities. DEFINITY switching capabilities are extended to support wideband calls comprised of multiple DS0s that are switched end-to-end as a single entity.

Wideband switching is designed for ISDN application equipment such as ISDN video codecs, but can also interface to non-ISDN application equipment by using PRI terminal adapters. In the same sense that a DEFINITY data module acts as a DCP or BRI terminal adapter between endpoint data such as V.35 and dialing interfaces such as RS-366 and a DCP interface, a PRI terminal adapter acts as a wideband terminal adapter between endpoint data and dialing interfaces and DEFINITY's line-side ISDN PRI interface. Wideband switching introduces PRI endpoints on DEFINITY line-side interfaces.

A PRI endpoint has a unique extension number and consists of one or more contiguous B-channels on a line-side T1 or E1 ISDN PRI facility. Endpoints initiate and receive calls via ISDN SETUP messages indicating the data rate and specific B-Channels to be used, and communicate all other call status information via standard ISDN messages. Any DEFINITY ISDN signaling set such as AT&T, CCITT, or ECMA may be used for a line-side ISDN PRI facility.

Multiple PRI endpoints on one line-side facility are separate and distinct within the facility. Non-overlapping contiguous sets of B-Channels are associated with

each PRI endpoint, and the endpoint equipment is expected to initiate calls within these boundaries. The endpoint application equipment must:

- Use standard ISDN-PRI signaling
- Adhere to the administered PRI endpoint boundaries when initiating calls
- Handle incoming calls appropriately, based on the originating PRI endpoint

Signaling and B-Channel States

PRI ports use a separate channel called the D-channel for call control and signaling messages. This is called out-of-band signaling. The D-channel associated with the set of B-channels is an ISDN-PRI signaling link port (ISDN-LNK). The signaling protocol used on the ISDN-PRI signaling link port D-channel is defined by one of the four selectable ISDN-PRI Specifications: AT&T, CCITT, ECMA, and ANSI.

The ISDN-PRI Specification defines the possible service states for a B-channel. The service state is negotiated with the far-end terminal adapter, changes over time, and can have a far-end and near-end components. The service state is initialized to Out-Of-Service/Far-End, and an attempt is made to negotiate it to In-Service. The service state of a particular PRI endpoint port B-channel can be displayed with the **status pri-endpoint** extension command.

If a call is present, the Specification defines the permissible call statES as well. There are tests in the short and long test sequences for the PRI endpoint port designed to audit these states and ensure agreement between both ends of the PRI wideband connection.

Alarming Based on Service States

A PRI endpoint port B-channel logs a warning alarm when it is placed in a Maintenance/Far-End or Out-Of-Service/Far-End state. While in such a state, the port is unusable for calls to the terminal adapter. However, the user can still use the other remaining ports in the PRI endpoint to make calls to and from the terminal adapter. When a warning alarm is raised, use the **status pri-endpoint** extension command to determine the exact state of the port. Other alarms can be diagnosed by using the short and long test sequences. Note that a PRI endpoint port B-channel can be placed in a far-end service state by direct action by the far-end terminal adapter or by inaction of the far-end terminal adapter. For example, if it does not respond to a Remote Layer 3 Query (see Test #260 for ISDN-LNK) the associated PRI endpoint port B-channels will be placed in the Maintenance/Far-End service state.

A PRI endpoint port is a port on a UDS1 interface circuit pack and thus depends on the health of the circuit pack for proper operation (see Figure 9-77 on the next page). A problem on the associated ISDN-PRI Signaling Link Port D-channel (ISDN-LNK) can also affect the PRI endpoint. The ISDN-PRI Signaling Link Port in

turn depends on the SYS-LINK (System Link) to the Packet Interface. Keep this hierarchy of dependencies in mind when diagnosing problems.

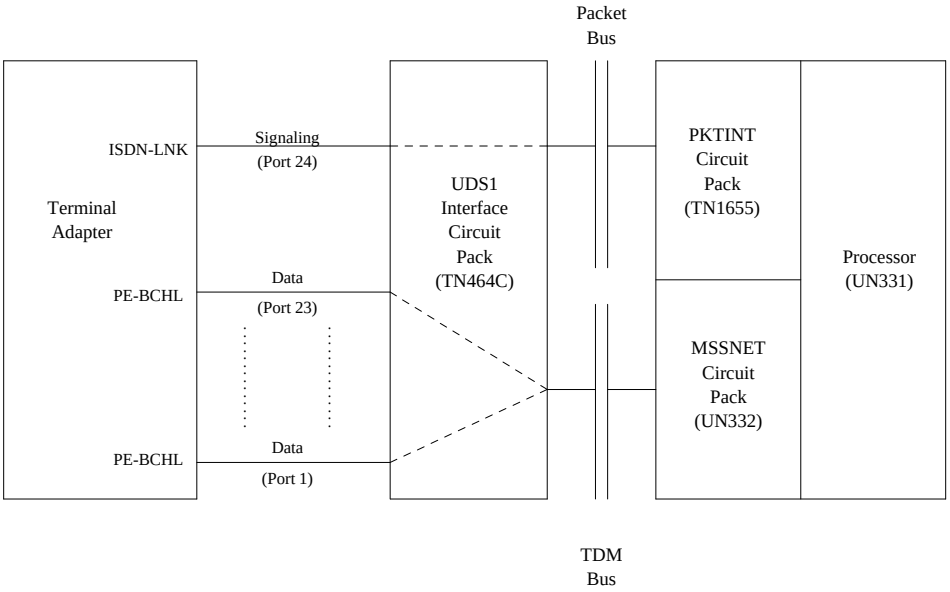

Figure 9-77. PRI Endpoint Port Interactions

PRI Endpoint Port Service States

The **status pri-endpoint** extension command displays the following possible service states for PRI endpoint ports. Table 9-262 on page P-59 gives recommended procedures for each state. Figure 9-78 on page P-61 shows typical progressions from one service state to another. Refer also to "Troubleshooting ISDN-PRI Endpoints (Wideband)" in Chapter 5, "Responding to Alarms and Errors" for a layered approach to addressing PRI endpoint problems.

- In-Service (INS)

  The B-channel is in its normal operating state.

- Out-of-Service/Far-End (OOS/FE)

  A B-Channel is initialized to this state when first administered. The switch then sends messages to the far-end terminal adapter to negotiate the B-channel into service. If the far-end terminal adapter does not respond to the messages within a certain time period, the port remains out of service,

and maintenance will periodically resend the messages. The port is unusable for incoming and outgoing calls, although other ports in the PRI endpoint can still be used.

- Out-of-Service/Near-End (OOS/NE)

  This is the state of the port when a hardware failure exists on the signaling link, the NPE Crosstalk Test fails, or when the port is busied out by command. In this state, the port is unusable for calls coming in to the switch or going out to the terminal adapter, although other ports in the PRI endpoint can still be used for incoming and outgoing calls. No messages are sent to the far-end terminal adapter until the signaling link comes back into service or the port is released by command.

- Maintenance/Far-End (MTC/FE)

  This state is reached when the far-end terminal adapter does not respond to messages sent over the signaling link for a particular port within a certain amount of time. This state is different from OOS/FE since the signaling link must have initially been up and the B-Channels in service. The switch will periodically send messages to the far-end terminal adapter to try to negotiate the port (B-channel) into service. The port is unusable for outgoing calls to the terminal adapter but will service incoming call requests from the far-end. Other ports of the PRI endpoint can still to place outgoing calls to the terminal adapter. Transitions into MTC/FE do not drop stable calls. If the service state changes from in-service to MTC/FE, stable calls are unaffected.

- Maintenance/Near-End (MTC/NE)

  The signaling link (SYS-LINK) is busied out by the **busyout**, **test port l** or **test pri-endpoint l** commands. Transitions into MTC/NE do not drop stable calls. The **busyout link lnk-no** command does not drop stable wideband calls. In this state, the B-Channel is not usable for new incoming calls to the switch or new outgoing calls to the terminal adapter.

- Pending States (PEND)

  If the near-end is expecting a timed response from the far-end for a request to change the service state of a port, a *pending* state is in effect. For example, if the port is out-of-service/far-end and an in-service message was sent to the far-end, then the service state of the port is OOS/FE-PEND/INS meaning out-of-service/far-end, pending/in-service. The service state will reflect this pending state until the far-end responds or the timer expires.

Table 9-262. PRI Endpoint Port Service States

Service State*	Alarm	Possible Cause	Possible Solution
OOS/NE	Warning	Port has been busied out by command.	Enter **release pri-endpoint** extension.
	Minor	NPE Crosstalk Test (#6) failed.	Replace UDS1 circuit pack.
		UDS1 circuit pack lost its signal.	Is the UDS1 circuit pack removed? Is the UDS1 cable disconnected? Is the far-end terminal restarting or experiencing problems? Check circuit pack using procedures UDS1-BD.
OOS/FE	Warning	Far-end problems or incompatibility	Check administration and status of the corresponding port on the terminal adapter.
	Warning	The far-end port is busied out.	Check the status of the far-end terminal adapter.
OOS/FE PINS		Service message was sent and the switch is waiting up to 2 min. for a reply from the far-end terminal adapter.	Wait 2 min. and check service state after the PINS state has cleared.
MTC/NE		System link demand busied out	Check link status. Release with **release link** link#.
MTC/FE	Warning	Signaling channel has been down for over 90 sec.	Consult ISDN-SGRP, ISDN-LNK and/or SYS-LINK. Far-end terminal adapter may currently be restarting.
	Warning	Repeated failure of far end to respond to messages.	Maintenance software will periodically try to resend messages. You can speed the process with **test port** UUCSSpp (Test #256).
	Warning	The far-end port is being tested.	Check status of the far-end terminal adapter.

Continued on next page

Table 9-262. PRI Endpoint Port Service States — *Continued*

Service State*	Alarm	Possible Cause	Possible Solution
MTC/FE PINS		Service message was sent and the switch is waiting up to 2 min. for a reply from the far-end terminal adapter.	Wait 2 min. and check service state after the PINS state has cleared.
INS		Normal operating state. ISDN wideband calls being completed.	

*OOS Out of Service

MTC Maintenance

FE Far-end

NE Near-end

PINS Pending in- service

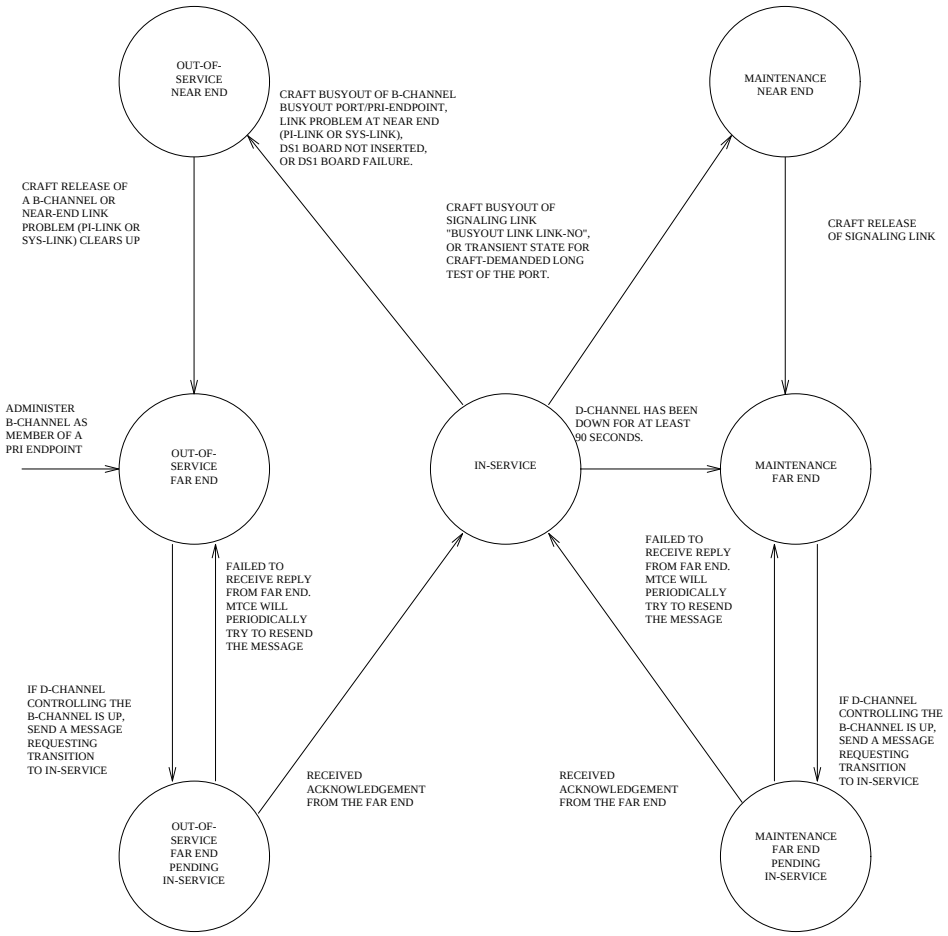

Figure 9-78. Common Progressions in PRI Endpoint Service States

Hardware Error Log Entries and Test to Clear Values

PRI endpoint port Error Log Entries					
Error Type	**Aux Data**	**Associated Test**	**Alarm Level**	**On/Off Board**	**Test to Clear Value**
0*	0	Any	Any	Any	test port *UUCSSpp* sh r 1
1(a)	Any	None			test port *UUCSSpp* sh r 1
15(b)	Any	Audit and Update Test (#36)			
18(c)	0	busyout pri-endpoint *extension* busyout port *UUCSSpp*			release pri-endpoint *extension* release port *UUCSSpp*
129(d)		None	WARNING	OFF	test port *UUCSSpp* sh r 1
130(e)		None	WARNING	ON	test port *UUCSSpp* sh
257(f)	Any	None			test port *UUCSSpp* sh r 1
513(g)	Any	None	WARNING	OFF	test port *UUCSSpp* sh r 1
769(f)	Any	None			test port *UUCSSpp* sh r 1
1281(h)	Any	Conference Circuit Test (#7	MINOR	ON	test port *UUCSSpp* l r 4
1537(i)	Any	NPE Crosstalk Test (#6)	MINOR	ON	test port *UUCSSpp* l r 3
1793(j)	Any	None			test port *UUCSSpp* sh r 1
3073(k)	Any	Service State Audit (#256)			test port *UUCSSpp* sh r 2
3585(l)	Any	None			None

* Run the Short Test Sequence first. If all tests pass, run the Long Test Sequence. Refer to the appropriate test description and follow the recommended procedures.

Notes:

a. These error types indicate a disagreement between this switch and the terminal adapter at the other end of the connection with regard to the ISDN *call* state of the PRI endpoint port. This switch will automatically try to recover by clearing the call (the call will be torn down). Use the **status pri-endpoint** extension command to determine the state of the port.

   When running the Short Test Sequence of tests, pay close attention to the results of the Call State Audit Test (#257).

b. This is a software audit error that does not indicate any hardware malfunction. Run the Short Test Sequence and investigate associated errors.

c. The PRI endpoint port has been busied out by **busyout pri-endpoint** extension or **busyout port UUCSSpp**. No wideband calls can be made to this port, although wideband calls can still be made to other ports within this PRI endpoint if they are in service.

d. The far-end terminal adapter changed its ISDN *service* state to either out-of-service or maintenance. This may be a temporary condition due to testing of this port by the far-end terminal adapter *or* a hardware problem with the port. Outgoing calls to the terminal adapter will not be allowed over the port, although calls can still be made to other ports that are in service within the same PRI endpoint. To investigate the status of the port, enter **status pri-endpoint** extension.

e. This error type indicates that the circuit pack has been removed or has been insane for more than 11 minutes. To clear the error, reinsert or replace the circuit pack.

f. These error types indicate a disagreement between this switch and the terminal adapter at the other end of the connection with regard to the ISDN service state of the PRI endpoint port. The switch will automatically try to recover by performing a service state audit. Use **status pri-endpoint** extension to determine the state of the port.

   When running the Short Test Sequence, pay close attention to the results of the Service State Audit Test (#256).

g. This port is not recognized by the far-end terminal adapter. Investigate the PRI endpoint administration for both the switch and the terminal adapter, and make sure they agree.

h. The Conference Circuit Test (#7) failed on this port. See Test #7 for repair procedures.

i. The NPE Crosstalk Test (#6) failed on this port. See Test #6 for repair procedures.

j. This error indicates a failure of the UDS1 Interface circuit pack. The results of the Signaling Link State Check Test (#255 in the short sequence) are important.

k. Two Service State Audit attempts have failed (see Test #256). The port will not be usable for any outgoing calls to the terminal adapter until the test passes and the port state is changed to in-service. Incoming calls from the terminal adapter *will* be accepted over this port, and other ports in the PRI endpoint can still be used for both incoming and outgoing calls to and from the terminal adapter.

l. Error Type 3585 appears when the switch receives an ISDN RESTART message for an ISDN port that is not idle. Since calls are not typically cleared with the RESTART message, this error type may be associated with a dropped call report from a user.

The following Aux Data values for Error Type 3585 represent the port's ISDN call state at the time the unexpected RESTART request was received from the terminal adapter. This information can be useful if dropped calls are being reported by users of the PRI endpoint. Aux values that do not appear below can be ignored.

PE-BCHL Error 3585 Aux Data

Aux Data	Meaning
10	A call in a stable, talking state (the *active* state) was cleared unexpectedly by the far-end terminal adapter with an ISDN RESTART message.
4 7 8 260 263	A call that has not reached the active state, but has at least reached a ringing state, was cleared unexpectedly by the far-end terminal adapter with an ISDN RESTART message.
1 3 6 265	A call that has not yet reached a ringing state was cleared unexpectedly by the far-end terminal adapter with an ISDN RESTART message.
11 12 19 531 267 268	A call that was already in the process of clearing has been cleared by the far-end terminal adapter with an ISDN RESTART message. If this condition occurs frequently, it may mean that the far-end terminal adapter is attempting to clear ports that it thinks are in a ''hung'' state. The RESTART message puts the port in an idle condition.

System Technician-Demanded Tests: Descriptions and Error Codes

Always investigate tests in the order presented in the table below when inspecting errors in the system. By clearing error codes associated with the *NPE Crosstalk Test*, for example, you may also clear errors generated from other tests in the testing sequence.

Order of Investigation	Short Test Sequence	Long Test Sequence	D/ND*
NPE Crosstalk Test (#6)		X	ND
Conference Circuit Test (#7)		X	ND
Audit and Update Test (#36)	X	X	ND
Signaling Link State Check Test (#255)	X	X	ND
Service State Audit Test (#256)	X	X	ND
Call State Audit Test (#257)	X	X	ND

* D = Destructive; ND = Nondestructive

NPE Crosstalk Test (#6)

One Network Processing Element (NPE) resides on the TN464C/D UDS1 circuit pack. The NPE controls port connectivity and gain, and provides conferencing functions on a per-port basis. The NPE Crosstalk Test verifies that this port's NPE channel talks on the selected time slot and never crosses over to time slots reserved for other connections. If the NPE is not working correctly, one-way and noisy connections may be observed. This test is usually part of a port's long test sequence and takes about 20 to 30 seconds to complete.

Table 9-263. TEST #6 NPE Crosstalk Test

Error Code	Test Result	Description/ Recommendation
	ABORT	Could not allocate the necessary system resources to run this test. 1. Retry the command at 1-minute intervals for a maximum of 5 times. 2. If the test continues to abort, escalate the problem.
1000	ABORT	System resources required to run this test are not available. The port may be in use on a valid call. Use **status pri-endpoint** extension commands to determine when the port is available for testing. 1. Retry the command at 1-minute intervals for a maximum of 5 times. 2. If the test continues to abort and the port is not in use, escalate the problem.
1001	ABORT	Could not allocate the necessary system resources to run this test. 1. Retry the command at 1-minute intervals for a maximum of 5 times. 2. If the test continues to abort, escalate the problem.

Continued on next page

Table 9-263. TEST #6 NPE Crosstalk Test — *Continued*

Error Code	Test Result	Description/ Recommendation
1002	ABORT	The system could not allocate time slots for the test. The system may be under heavy traffic conditions or it may have time slots out-of-service due to TDM-Bus errors. Use the **status health** command to determine if the system is experiencing heavy traffic. Investigate and resolve any errors against TDM-BUS. 1. If system has no TDM-Bus errors and is not handling heavy traffic, repeat test at 1-minute intervals for a maximum of 5 times. 2. If the test continues to abort, escalate the problem.
1003	ABORT	The system could not allocate a tone receiver for the test. The system may be oversized for the number of tone detectors present or some tone detectors may be out-of-service. The **list measurements tone-receiver** command will display information on the system's tone receiver. 1. Look for and resolve any errors against TTR-LEV. 2. Look for and resolve any errors against TONE-PT. 3. If neither of the above exists, retry the test at 1-minute intervals for a maximum of 5 times. 4. If the test continues to abort, escalate the problem.
1004	ABORT	The port has been seized by a user for a valid call. Use **status pri-endpoint** extension to determine when the port is available for testing. 1. Retry the command at 1-minute intervals for a maximum of 5 times. 2. If the test continues to abort and the port is not in use, escalate the problem.
1117	ABORT	A service state audit message is outstanding. 1. Wait 2 minutes and then try again.

Continued on next page

Table 9-263. TEST #6 NPE Crosstalk Test — *Continued*

Error Code	Test Result	Description/ Recommendation
2000	ABORT	Response to the test request was not received within the allowable time period. 1. Retry the command at 1-minute intervals for a maximum of 5 times. 2. If the test continues to abort, escalate the problem.
2020	ABORT	The test did not run due to an existing error on the specific port or a more general circuit pack error. 1. Examine the Error Log for existing errors against this port or the circuit pack and follow recommended procedures.
2100	ABORT	Could not allocate the necessary system resources to run this test. 1. Retry the command at 1-minute intervals for a maximum of 5 times. 2. If the test continues to abort, escalate the problem.
Any	FAIL	The NPE of the tested port was found to be transmitting in error. This will cause noisy and unreliable connections. The PE-BCHL is moved to out-of-service/near-end state. 1. Replace the circuit pack.
	PASS	The port is able to communicate over the TDM Bus.

Conference Circuit Test (#7)

One Network Processing Element (NPE) resides on the TN464C/D UDS1 circuit pack. The NPE controls port connectivity and gain, and provides conferencing functions on a per port basis. The Conference Circuit test verifies that the NPE channel for the port being tested can correctly perform the conferencing function. The NPE is instructed to listen to several different tones and conference the tones together. The resulting signal is measured by a tone detector port. If the level of the tone is within a certain range, the test passes.

Table 9-264. TEST #7 Conference Circuit Test

Error Code	Test Result	Description/ Recommendation
	ABORT	Could not allocate the necessary system resources to run this test. 1. Retry the command at 1-minute intervals for a maximum of 5 times. 2. If the test continues to abort, escalate the problem.
1000	ABORT	System resources required to run this test are not available. The port may be in use on a valid call. Use **status pri-endpoint** extension commands to determine when the port is available for testing.
1004	ABORT	The port has been seized by a user for a valid call. Use **status pri-endpoint** extension to determine when the port is available for testing. 1. Retry the command at 1-minute intervals for a maximum of 5 times. 2. If the test continues to abort and the port is not in use, escalate the problem.
1020	ABORT	The test did not run due to an already existing error on the specific port or a more general circuit pack error. 1. Examine Error Log for existing errors against this port or the circuit pack and attempt to diagnose the already existing error.

Continued on next page

Table 9-264. TEST #7 Conference Circuit Test — *Continued*

Error Code	Test Result	Description/ Recommendation
2000	ABORT	Response to the test request was not received within the allowable time period.
2100	ABORT	Could not allocate the necessary system resources to run this test. 1. Retry the command at 1-minute intervals for a maximum of 5 times. 2. If the test continues to abort, escalate the problem.
Any	FAIL	The NPE of the tested port did not conference the tones correctly. This will cause noisy and unreliable connections. 1. Replace the circuit pack. Even though wideband calls do not use the conferencing feature on the NPE, this failure indicates problems with the circuit pack hardware.
	PASS	The port can correctly conference multiple connections. User-reported troubles on this port should be investigated using other port tests and examining terminal adapter or external wiring.

Audit and Update Test (#36)

This test sends port level translation data from switch processor to the UDS1 interface circuit pack to assure that the port's translation is correct. The port audit operation verifies the consistency of the current state of port kept in the UDS1 interface circuit pack and in the switch software.

Table 9-265. TEST #36 Audit and Update Test

Error Code	Test Result	Description/ Recommendation
	ABORT	Internal System Error
2000	ABORT	Response to the test request was not received within the allowable time period.
2100	ABORT	Could not allocate the necessary system resources to run this test.
	FAIL	Test failed due to internal system error. 1. Retry the command at 1-minute intervals for a maximum of 5 times. 2. If the test continues to fail, escalate the problem.
	PASS	Port translation has been updated successfully. The current port states kept in the UDS1 interface circuit pack and switch software are consistent. If the port is busied out, the test will not run, but will return PASS. To verify that the port is in-service: 1. Enter **status pri-endpoint** extension to verify that the port is in-service. If the port is in-service, no further action is necessary. If the port is out-of-service, continue to Step 2. 2. Enter **release pri-endpoint** extension or **release port** UUCSSpp command to put port back into in-service. 3. Retry the test command.

Signaling Link State Check Test (#255)

As noted in the preceding general description, operation of the PRI endpoint port depends on the health of the UDS1 interface circuit pack and System Link for proper operation. This test checks the status of those critical elements.

Table 9-266. TEST #255 Signaling Link State Check Test

Error Code	Test Result	Description/ Recommendation
	ABORT	Internal System Error 1. Retry the command at 1-minute intervals for a maximum of 5 times. 2. If the test continues to abort, escalate the problem.
1700	ABORT	Rollabout video abort. The PRI terminal adapter associated with this PRI endpoint extension is detached from the circuit pack. This is a normal abort when the rollabout video feature is enabled. 1. Either reconnect the disconnected PRI terminal adapter or disable the rollabout video feature on this circuit pack. To do the latter, enter **change ds1 UUCSS** and set the field labeled ‘‘Alarm when PRI Endpoint Detached?’’ to ‘‘y.’’
4	FAIL	There is a problem with the Signaling Channel and/or with the System Link. 1. Consult procedures for the ISDN-GRP and SYS-LINK. See also ISDN-LNK for useful information.
8	FAIL	There is a problem with the UDS1 interface circuit pack. 1. Consult procedures for UDS1-BD.
	PASS	The signaling link hardware is OK.

Service State Audit (#256)

As noted in the general description for PRI endpoint port, these ports may be in one of several service states as defined by the ISDN-PRI Specification. This test performs a service state audit with the far-end terminal adapter to ensure both sides agree on the service state.

A PASS for this test simply means that an audit message was successfully composed and sent out to the far-end terminal adapter. The ISDN Specification allows up to 2 minutes for a reply. If no reply is received within that 2 minute window, this switch will automatically try once again. If that attempt fails, an error will be logged (Error Type 3073) and the switch will then attempt recovery by automatically retrying approximately every 15 minutes. If the port was initially in the INS (in-service) state, it will now be placed in the MTC/FE (maintenance state, far-end problem) state. Until a Service State Audit attempt is successful, no outgoing calls will be placed over this port, but incoming calls will be accepted. The service state of this port does not affect the service state of other ports in the PRI endpoint. If an incoming call that uses this port is presented while in such a state, a Service State Audit attempt will immediately be attempted (that is, the switch will not wait for the 15-minute cycle, but will instead try to recover immediately). To investigate the status of this PRI endpoint port, issue the **status pri-endpoint** extension command.

Table 9-267. TEST #256 Service State Audit Test

Error Code	Test Result	Description/ Recommendation
1113	ABORT	The signaling link has failed, so the system cannot send any messages on behalf of this port. 1. Check the results of Test #255 (Signaling Link State Check).
1117	ABORT	A service state audit message is outstanding. 1. Wait 2 minutes and then try again.
1700	ABORT	Rollabout video abort. The PRI terminal adapter associated with this PRI endpoint extension is detached from the circuit pack. This is a normal abort when the rollabout video feature is enabled. 1. Either reconnect the disconnected PRI terminal adapter or disable the rollabout video feature on this circuit pack. To do the latter, enter **change ds1 UUCSS** and set the field labeled ‘‘Alarm when PRI Endpoint Detached?’’ to ‘‘y.’’

Continued on next page

Table 9-267. TEST #256 Service State Audit Test — *Continued*

Error Code	Test Result	Description/ Recommendation
2100	ABORT	Could not allocate the necessary system resources to run this test. 1. Retry the command at 1-minute intervals for a maximum of 5 times. 2. If the test continues to abort, escalate the problem.
	FAIL	Internal System Error 1. Retry the command at 1-minute intervals for a maximum of 5 times. 2. If the test continues to abort, escalate the problem.
	PASS	Wait 4 minutes and then check the Error Log for any new errors of type 3073. If there are none, then both sides of the ISDN connection agree on the service state; the negotiation succeeded. If there is a new 3073 error, then the negotiation failed (the far-end terminal adapter twice failed to respond within the mandatory 2-minute window). This switch will automatically retry approximately every 15 minutes. If the port was initially in the INS (in-service) state, it will now be placed in the MTC/FE (maintenance, far-end problem) state (refer to the ‘‘Service States’’ section which precedes the PE-BCHL ‘‘Hardware Error Log Entries and Test to Clear Values’’ table); incoming calls will be accepted, but no outgoing calls will be originated this port. If an incoming call is presented, another Service State Audit will be immediately performed in an attempt to bring the PRI endpoint port the proper state.

Call State Audit Test (#257)

If a call is active on the port, the switches on both sides of the connection should agree on the ISDN state of the call as defined in the ISDN Protocol Specification. This test audits internal call state data by querying the far-end terminal adapter as to the ISDN state of the call. It can be helpful when trying to clear a hung call. If the internal call state data on the near-end switch is different than that of the far-end terminal adapter, **the call will be torn down.**

As with Test #256 (Service State Audit), a PASS simply means that an appropriate message was composed and sent to the far-end terminal adapter. The ISDN Specification allows up to 2 minutes for a reply. If a reply is not received within the 2 minute window, a protocol time-out violation will be recorded in the error log against the associated signaling channel (ISDN-PRI Signaling Link Port, which is listed in the Error Log as ISDN-LNK; the Error Type is 1).

Table 9-268. TEST #257 Call State Audit Test

Error Code	Test Result	Description/ Recommendation
1019	ABORT	An audit is already in progress. 1. Wait 2 minutes and try again.
1113	ABORT	The signaling link has failed, so the system cannot send any messages on behalf of this port. 1. Check the results of Test #255 (Signaling Link State Check).
1116	ABORT	The port is in an out-of-service ISDN service state. 1. A call cannot be present if the port is in an ISDN out-of-service state, so a call state audit would be inappropriate. No action necessary. (Use the **status pri-endpoint** extension command to investigate the ISDN state of the port).
1700	ABORT	Rollabout video abort. The PRI terminal adapter associated with this PRI endpoint extension is detached from the circuit pack. This is a normal abort when the rollabout video feature is enabled. 1. Reconnect the disconnected PRI terminal adapter or disable the rollabout video feature on this circuit pack. To do the latter, enter **change ds1 UUCSS** and set the field labeled "Alarm when PRI Endpoint Detached?" to "y."

Continued on next page

Table 9-268. TEST #257 Call State Audit Test — *Continued*

Error Code	Test Result	Description/ Recommendation
2100	ABORT	Could not allocate the necessary system resources to run this test. 1. Retry the command at 1-minute intervals for a maximum of 5 times. 2. If the test continues to abort, escalate the problem.
	FAIL	Internal System Error 1. Retry the command at 1-minute intervals for a maximum of 5 times. 2. If the test continues to abort, escalate the problem.
	PASS	This switch sent a call state auditing message to the far-end terminal adapter to verify the state of the call active on this port. If a call state mismatch is found, then the call will be torn down within two minutes. If no call was active, then no message was sent.

PGATE-BD (Packet Gateway Circuit Pack)

MO Name As It Appears in Alarm Log	Alarm Level	Initial System Technician Command to Run (a)	Full Name of MO
PGATE-BD	MINOR	test board UUCSS long	Packet Gateway Circuit Pack
PGATE-BD	WARNING	test board UUCSS short	Packet Gateway Circuit Pack

a. UU is the universal cabinet number (1 for PPN, 2 - 44 for EPNs). C is the carrier designation (A, B, C, D, or E). SS is the number of the slot in which the circuit pack resides (01 to 21).

Packet Gateway Circuit Pack

The TN577 Packet Gateway is a packet port circuit pack that provides connectivity between synchronous communication links and Packet Bus endpoints.

A LAPD signaling link is established between the Packet Gateway and the SPE for passing call control and other management information. Since one link serves all the ports on the circuit pack, maintenance of the signaling link is part of the Packet Gateway circuit pack maintenance.

Three external cabling arrangements allow port configurations supporting four RS423 connectors. External ports on Packet Gateways running the X.25 application provide switch connectivity to BX.25 adjuncts : AUDIX, CMS, ISDN Gateway, other PBXs in a DCS network, and 3B2 Message Server Adjuncts.

Packet Gateway Congestion Controls

Congestion controls are activated on Packet Gateway when the number of buffers reach a specified threshold (high buffer mark). The switch releases its congestion controls when the Packet Gateway reports that it has recovered from congestion, i.e., its utilized buffer level has returned to normal levels.

A MINOR on-board alarm is raised if congestion persists on the affected Packet Gateway for a 15 minute interval or is raised immediately if the congestion controls fail to prevent all buffers from being exhausted. When congestion abates, the MINOR alarm is not retired until the Packet Gateway is free of congestion for 30 minutes.

Hardware Error Log Entries and Test to Clear Values

PGATE-BD Error Log Entries

Error Type	Aux Data	Associated Test	Alarm Level	On/Off Board	Test to Clear Value
1 (a)	0		MINOR	ON	
18 (b)			WARNING	OFF	release board UUCSS
23 (c)	0		WARNING	OFF	add pgate UUCSS
257	65535	Control Channel Loop Test (#52)	MINOR	ON	test board UUCSS l r 20
257 (d)					
513 (e)	4352 to 4357		MINOR	ON	
769 (f)	4358				
1291 to 1296 (g)			MINOR	ON	reset board UUCSS
1537(h)			MINOR	ON	
1793 1794 1795 (i)			MINOR	ON	
2049 (j)		Packet Interface Test (#598)	MINOR	ON	test board UUCSS l r 3
2305 2306 (k)					
2817 2819 (l)		Congestion Query Test (#600)	MINOR	ON	test board UUCSS s r 3
3073 (m)		Link Status Test (#601)	MINOR	ON	test board UUCSS s
3329 (n)			MINOR	ON	reset board UUCSS
3568 (o)					
3840 (p)	4096 to 4100				

Continued on next page

PGATE-BD Error Log Entries

Error Type	Aux Data	Associated Test	Alarm Level	On/Off Board	Test to Clear Value
3841 3843 (q)					
3842 (r)					
3999 (s)	Any	None			

Notes:

a. This error indicates that the circuit pack has stopped functioning or was physically removed from the system. Check too see whether the circuit pack is present in the slot indicated by the error. If the circuit pack is there, then reset it with **reset board UUCSS**. If the error persists, than replace the circuit pack.

b. Packet Gateway circuit pack has been busied out by command.

c. Packet Gateway circuit pack has not been administered for the slot in which it is inserted.

d. This error indicates transient communication problems between the switch and this circuit pack. This error is not service affecting and can be ignored unless repeated failure of the Control Channel Loop-Around Test indicates a hardware failure of the circuit pack.

e. A hardware failure on the circuit pack has been detected and reported by the circuit pack. These errors are detected by initialization or background tests which run on the circuit pack. The detection of one of these errors causes the circuit pack to "lock up" and appear insane to the system See error type 1.

The reported aux data values correspond to the following detected errors:

4352: External RAM error

4353: Internal RAM error

4355: ROM Checksum error

4357: Instruction set error

f. This error is reported by the circuit pack when it detects a program logic error. This error can be ignored, but may lead to errors of other types being reported against this circuit pack.

g. A critical hardware or firmware failure has been detected on the circuit pack. The switch resets the circuit pack upon the report of one of these errors. If three of these errors are received in 15 minutes, a MINOR alarm is raised on the circuit pack. Try clearing the alarm by executing the **reset board UUCSS** command. The circuit pack should be replaced if this alarm cannot be resolved.

   The reported error types correspond to the following detected errors:

1291:	Contents of translation and application program memory corrupted
1292:	Internal hardware component failure
1293:	On-board auxiliary processor insane
1294:	Internal memory access error
1296:	Call aborted due to bad translation RAM locations

h. The circuit pack is hyperactive (flooding the switch with messages sent over the control channel) and is taken out of service when a threshold number of these errors are reported to the switch. Reset the circuit pack via the **reset board UUCSS** command to clear the alarm. If the error happens again within 15 minutes, then replace the circuit pack.

i. These errors are detected and reported by the circuit pack when transmitting frames to the packet bus. The switch raises a MINOR alarm on the circuit pack when these errors are received by the switch at a defined rate.

   These errors are reported when the following errors are detected:

1793:	Parity errors are detected when transmitting frames to the packet bus
1794:	Overflow of packet bus transmit buffers has occurred
1795:	Circuit pack cannot find end of frame when transmitting to packet bus

   Reset the circuit pack via the **reset board UUCSS** command to clear the alarm. If the error happens again within 15 minutes, then replace the circuit pack.

j. This error is reported when the "Packet Interface Test" has failed. A threshold number of these failures cause a MINOR alarm to be raised on the circuit pack. If the alarm cannot be cleared, try resetting the circuit pack to clear the problem. If the circuit pack reset is successful, execute the "Packet Interface Test" several times again. Replace the circuit pack if the "Packet Interface Test" continues to fail.

k. This error occurs when the circuit pack detects an error in a received frame from the packet bus. These errors are most likely caused by a packet bus problem, but may be due to a circuit pack fault.

   These error types are reported when the following errors are detected:

   2305: Invalid LAPD frame received

   2306: Parity error detected on received frame

   An Invalid LAPD frame error occurs if the frame contains bad CRC, is greater than the maximum length, or violates the link level protocol.

   When invalid LAPD frame errors are reported, the ‘‘Invalid LAPD Frame Error Counter Test’’ should be executed to determine if the condition has cleared. When bus parity errors are reported, the ‘‘LANBIC Receive Parity Error Counter Test’’ should be performed to determine if the condition has cleared. Execution of the Packet Interface Test should be performed if this problem persists to verify the integrity of the circuit pack. If the Packet Interface Test passes, then the repair procedure for the packet bus should be consulted.

l. These errors occur when the Packet Gateway reports that it is congested or the ‘‘Congestion Query Test’’ fails. A Packet Gateway enters a congested state when the number of utilized buffers on the board exceeds a specified threshold.

   The error types associated with congestion are defined as follows:

   2817: Utilized buffers have exceeded high buffer mark

   2819: All buffers exhausted

   See description of "Congestion Query Test (#600)" on page P-94 for correct repair procedure to follow.

m. This error is reported when the call control signaling link fails or when the Link Status Test fails for an X.25 Packet Gateway circuit pack. The call control signaling link is considered failed when it is disconnected at the link level and cannot be reconnected quickly. If the link cannot be reconnected quickly, a MINOR off-board alarm is raised against the circuit pack. This failure may be due to circuit pack problems, packet bus problems, or packet interface circuit pack problems.

n. A critical failure has been detected in the Packet Bus interface of the circuit pack. The switch resets the circuit pack upon the report of one of these errors. If two of these errors are received in 15 minutes, a MINOR alarm is raised on the circuit pack. Try clearing the alarm by executing the **reset board UUCSS** command. The circuit pack should be replaced if this alarm cannot be resolved.

o. The circuit pack is hyperactive (flooding the switch with messages sent over the control channel) and is taken out of service when a threshold number of these errors are reported to the switch. It may exhibit one or more of the following symptoms:

1. Tests run on the ports of this circuit pack return NO-BOARD.
2. **List configuration** shows that the circuit pack and ports are properly installed.
3. A busyout/release of the circuit pack brings the board back into service.
4. Error type 3999 indicates that the circuit pack sent a large number of control channel messages to the switch within a short period of time. If error type 3586 is also present, then the circuit pack was taken out-of-service due to hyperactivity. If error type 3586 is not present, then the circuit pack has not been taken out-of-service, but it has generated 50% of the messages necessary to be considered hyperactive. This may be completely normal during heavy traffic periods. However, if this error type is logged when the circuit pack is being lightly used, it may indicate a problem with the circuit pack or the equipment attached to it.

This condition should clear itself within 30 minutes. It is recommended that the error be allowed to clear itself. If this error reoccurs within 15 minutes of being cleared, replace the circuit pack. If the same error occurs on a different circuit pack, follow normal escalation procedures.

The circuit pack can be manually brought back into service in the following ways.

— Busyout and release the circuit pack.

— Busyout, reset and release the circuit pack.

p. These errors are not service-affecting and can be ignored.

These errors are reported by the circuit pack when it receives a bad control channel message from the switch. The auxiliary data identifies the following error events:

4096:	Bad major heading
4097:	Bad port number
4098:	Bad data
4099:	Bad sub-qualifier
4100:	State inconsistency

q. By themselves, these errors are not service-affecting and can be ignored. They may cause other errors which are service-affecting to be reported.

The error type indicates the following:

3841:	Internal firmware error
3843:	Bad translation RAM detected, but call continues by using another translation location

When it begins to affect service, error type 3843 escalates to error type 1296.

r. This error is reported when the receive buffers for the packet interface overflow. Frequent occurrence of this error may be indicative of a congested circuit pack. See description of “Receive FIFO Overflow Error Counter Test.’’

System Technician-Demanded Tests: Descriptions and Error Codes

When inspecting errors in the system and deciding which ones to address, always investigate errors in the order they are presented in the table below.

Order of Investigation	Short Test Sequence	Long Test Sequence	D/ND*
Control Channel Loop-Around Test #52	X	X	ND
Invalid LAPD Frame Error Counter Test #597		X	ND
LANBIC Receive Parity Error Counter Test #595		X	ND
Receive FIFO Overflow Error Counter Test #596		X	ND
Packet Interface Test #598	X	X	ND
Congestion Query Test #600	X	X	ND
Link Status Test #601	X	X	ND

* D = Destructive; ND = Nondestructive

Circuit Pack Restart Test (#252)

This destructive test is used to reset the circuit pack. This test is not part of either short or long demand test sequence and is executed only on detection of PPCPU errors. The circuit pack is reset via the SAKI Sanity Test (#53).

Control Channel Loop-Around Test (#52)

This test queries the circuit pack for its circuit pack code and vintage and verifies its records.

This test is non-destructive.

Table 9-269. TEST #52 Control Channel Loop-Around Test

Error Code	Test Result	Description/ Recommendation
None 2100	ABORT	Could not allocate the necessary system resources to run this test. 1. Retry the command at 1-minute intervals for a maximum of 5 times. 2. If the test continues to abort, escalate the problem.
	FAIL	The circuit pack failed to return the circuit pack code or vintage. 1. Retry the command a few times for a maximum of 5 times. 2. If the problem continues to fail, and if the circuit pack is one of the Port Circuit Packs, pull out and reinsert the circuit pack. Otherwise, if the circuit pack is one of the Processor Complex Circuit Packs, see 'Replacing SPE Circuit Packs" in Chapter 5, 'Responding to Alarms and Errors" for how to pull out and reinsert the circuit pack. 3. Retry the command a few times for a maximum of 5 times. 4. If the problem continues to fail, and if the circuit pack is one of the Port Circuit Packs, replace the circuit pack. Otherwise, if the circuit pack is one of the Processor Complex Circuit Packs, see 'Replacing SPE Circuit Packs" in Chapter 5, 'Responding to Alarms and Errors" for how to replace the circuit pack. 5. Retry the command a few times for a maximum of 5 times. 6. If the test continues to fail, escalate the problem.
	PASS	Communication with this circuit pack is successful.

Circuit Pack Restart Test (#252)

This test is destructive.

This test is used to reset the circuit pack. This test is not part of either short or long demand test sequence and is executed only on detection of PPCPU errors. The circuit pack is reset via the SAKI Sanity Test (#53).

The SAKI Sanity Test resets the circuit pack. This test fails if the circuit pack does not return to a sane state after being reset.

Table 9-270. Test #252 Circuit Pack Restart Test

Error Code	Test Result	Description/ Recommendation
None	ABORT	Could not allocate the necessary system resources to run this test. 1. Retry the command at 1-minute intervals for a maximum of 5 times. 2. If the test continues to abort, escalate the problem.
1015	ABORT	Port is not out-of-service. 1. Busyout the circuit pack. 2. Execute command again.
2100	ABORT	Could not allocate the necessary system resources to run this test. 1. Retry the command at 1-minute intervals for a maximum of 5 times. 2. If the test continues to abort, escalate the problem.
1	FAIL	The circuit pack failed to reset. 1. Execute command again. 2. If the problem persists, then pull out and reinsert the circuit pack. 3. If the problem persists, replace the circuit pack.

Continued on next page

Table 9-270. Test #252 Circuit Pack Restart Test — *Continued*

Error Code	Test Result	Description/ Recommendation
2	FAIL	The circuit pack failed to restart. 1. Execute command again. 2. If the problem persists, then pull out and reinsert the circuit pack. 3. If the problem persists, replace the circuit pack.
	PASS	The circuit pack initializes correctly. 1. Run the short test sequence.

LANBIC Receive Parity Error Counter Test (#595)

The test reads and clears the LANBIC Receive Parity Error Counter on the Packet Gateway circuit pack. This counter is incremented by the circuit pack when it detects a parity error with a received frame from the packet bus.

These errors may be indicative of a circuit pack problem, packet bus problem, or a problem with another circuit pack on the bus. This test is useful for verifying the repair of the problem.

This test is non-destructive.

Table 9-271. TEST #595 LANBIC Receive Parity Error Counter Test

Error Code	Test Result	Description/ Recommendation
2000	ABORT	Response to the test was not received from the circuit pack within the allowable time period. 1. If the test fails repeatedly, attempt to reset the circuit pack. 2. If the test fails again, replace the circuit pack.
2100	ABORT	Could not allocate the necessary system resources to run this test. 1. Retry the command at 1-minute intervals for a maximum of 5 times. 2. If the test continues to abort, escalate the problem.
2500	ABORT	Internal System Error. 1. Retry the command at 1-minute intervals a maximum of 5 times. 2. If the test continues to abort, escalate the problem.
1-10	FAIL	The circuit pack is still detecting errors of this type. The error code indicates the value of the on-board error counter. 1. Retry the command at 1-minute intervals a maximum of 5 times. 2. If the test continues to fail, execute the “Packet Interface Test.”. 3. If “Packet Interface Test” passes, see repair procedures for Packet Bus.
	PASS	No errors detected by circuit pack.

Receive FIFO Overflow Error Counter Test (#596)

The test reads and clears the Receive FIFO Overflow Error Counter on the Packet Gateway circuit pack. This counter is incremented by the circuit pack when it detects its packet bus receive buffers overflow.

These errors can occur occasionally due to the statistical sizing of the buffers. Persistent occurrence of these errors may be indicative of a congested circuit pack. Distribution of a portion of the traffic load on the circuit pack to other circuit packs in the system may be necessary.

This test is non-destructive.

Table 9-272. TEST #596 Receive FIFO Overflow Error Counter Test

Error Code	Test Result	Description/ Recommendation
2000	ABORT	Response to the test was not received from the circuit pack within the allowable time period. 1. If the test fails repeatedly, attempt to reset the circuit pack. 2. If the test fails again, replace the circuit pack.
2100	ABORT	Could not allocate the necessary system resources to run this test. 1. Retry the command at 1-minute intervals a maximum of 5 times. 2. If the test continues to abort, escalate the problem.
2500	ABORT	Internal System Error. 1. Retry the command at 1-minute intervals a maximum of 5 times. 2. If the test continues to abort, escalate the problem.

Continued on next page

Table 9-272. TEST #596 Receive FIFO Overflow Error Counter Test — *Continued*

Error Code	Test Result	Description/ Recommendation
1-10	FAIL	The circuit pack is still detecting errors of this type. The error code indicates the value of the on-board error counter. 1. Retry the command at 1-minute intervals a maximum of 5 times. 2. If the test continues to fail, perform the ‘‘Packet Interface Test.’’ 3. If “Packet Interface Test” passes, see repair procedures for Packet Bus.
	PASS	No errors detected by circuit pack.

Invalid LAPD Frame Error Counter Test (#597)

The test reads and clears the Invalid LAPD Frame Error Counter on the Packet Gateway circuit pack. This counter is incremented by the circuit pack when it receives an invalid LAPD frame on its packet interface. An invalid frame is detected when a CRC error is detected on a received frame, an unrecognizable frame is received, or a recognizable frame is received in an unexpected state.

These errors may be indicative of a circuit pack problem, packet bus problem, or a problem with another circuit pack on the bus. This test is useful for verifying the repair of the problem.

This test is non-destructive.

Table 9-273. TEST #597 Invalid LAPD Frame Error Counter Test

Error Code	Test Result	Description/ Recommendation
2000	ABORT	Response to the test was not received from the circuit pack within the allowable time period. 1. If the test fails repeatedly, attempt to reset the circuit pack. 2. If the test fails again, replace the circuit pack.
2100	ABORT	Could not allocate the necessary system resources to run this test. 1. Retry the command at 1-minute intervals for a maximum of 5 times. 2. If the test continues to abort, escalate the problem.
2500	ABORT	Internal System Error. 1. Retry the command at 1-minute intervals a maximum of 5 times. 2. If the test continues to abort, escalate the problem.

Continued on next page

Table 9-273. TEST #597 Invalid LAPD Frame Error Counter Test — *Continued*

Error Code	Test Result	Description/ Recommendation
1-10	FAIL	The circuit pack is still detecting errors of this type. The error code indicates the value of the on-board error counter. 1. Retry the command at 1-minute intervals a maximum of 5 times. 2. If the test continues to fail, execute the "Packet Interface Test". 3. If "Packet Interface Test" passes, see repair procedures for Packet Bus.
	PASS	No errors detected by circuit pack.

Packet Interface Test (#598)

The test checks the packet bus interface circuitry on the Packet Gateway circuit pack. Failure of this test is indicative of a faulty circuit pack.

This test is non-destructive.

Table 9-274. TEST #598 Packet Interface Test

Error Code	Test Result	Description/ Recommendation
2000	ABORT	Response to the test was not received from the circuit pack withing the allowable time period. 1. If the test fails repeatedly, attempt to reset the circuit pack. 2. If the test fails again, replace the circuit pack.
2012	ABORT	Internal System Error. 1. Retry the command at 1-minute intervals a maximum of 5 times. 2. If the test continues to fail, escalate the problem.
2100	ABORT	Could not allocate the necessary system resources to run this test. 1. Retry the command at 1-minute intervals for a maximum of 5 times. 2. If the test continues to abort, escalate the problem.
	FAIL	Circuit pack has detected a failure of the Packet Interface Test. 1. Retry the command 5 times. 2. If the test continues to fail, reset the circuit pack. 3. If the test continues to fail, replace the circuit pack.
	PASS	The Packet Interface Test passes.

Congestion Query Test (#600)

This test determines the state of congestion on the Packet Gateway circuit pack based on the number of utilized buffers on the board. The test passes if the Packet Gateway is operating normally, i.e., utilized buffers are at a normal level. This test fails if the Packet Gateway is in a congested state, i.e., utilized buffers are approaching exhaust or are exhausted.

The switch automatically throttles new calls to a congested Packet Gateway. New outgoing calls are redirected to another Packet Gateway if available. New incoming calls are denied. Normal call handling is resumed when the Packet Gateway reports that it has recovered from congestion.

This test is non-destructive.

Table 9-275. TEST #600 Congestion Query Test

Error Code	Test Result	Description/ Recommendation
2000	ABORT	Response to the test was not received from the circuit pack within the allowable time period. 1. If the test fails repeatedly, attempt to reset the circuit pack. 2. If the test fails again, replace the circuit pack.
2012	ABORT	Internal System Error. 1. Retry the command at 1-minute intervals a maximum of 5 times. 2. If the test continues to fail, escalate the problem.
2100	ABORT	Could not allocate the necessary system resources to run this test. 1. Retry the command at 1-minute intervals for a maximum of 5 times. 2. If the test continues to abort, escalate the problem.

Continued on next page

Table 9-275. TEST #600 Congestion Query Test — *Continued*

Error Code	Test Result	Description/ Recommendation
1	FAIL	The Packet Gateway is congested. Its buffer level is approaching exhaust. 1. Retry command 5 times at 1-minute intervals. 2. If command continues to fail, it may be necessary to shed load from the affected Packet Gateway if congestion persists. Examine the Packet Gateway port measurements to determine which ports are heavily utilized and the processor occupancy of the circuit pack. 3. A low processor occupancy when Packet Gateway congested indicates a failure of the circuit pack. Try resetting the circuit pack. If congestion reoccurs, replace the circuit pack. 4. A high processor occupancy validates that the Packet Gateway is actually congested due to traffic load. In the short term, congestion may be relieved by selectively busying out ports on the Packet Gateway or by busying out BRI endpoints assigned to the affected Packet Gateway. In the long term, replacement of ports on the affected Packet Gateway by new ports on existing other or new Packet Gateways or redistribution of D-Channels to existing other or new Packet Gateways has to be considered.

Continued on next page

Table 9-275. TEST #600 Congestion Query Test — *Continued*

Error Code	Test Result	Description/ Recommendation
2	FAIL	The Packet Gateway is congested. No buffers are available at the current time. 1. Retry command 5 times at 1-minute intervals. 2. If command continues to fail, it may be necessary to shed load from the affected Packet Gateway if congestion persists. Examine the Packet Gateway port measurements to determine which ports are heavily utilized and the processor occupancy of the circuit pack. 3. A low processor occupancy when Packet Gateway congested indicates a failure of the circuit pack. Try resetting the circuit pack. If congestion reoccurs, replace the circuit pack. 4. A high processor occupancy validates that the Packet Gateway is actually congested due to traffic load. In the short term, congestion may be relieved by selectively busying out ports on the Packet Gateway or by busying out BRI endpoints assigned to the affected Packet Gateway. In the long term, replacement of ports on the affected Packet Gateway by new ports on existing other or new Packet Gateways or redistribution of D-Channels to existing other or new Packet Gateways has to be considered.
3	FAIL	The Packet Gateway circuit pack is operating normally and is not congested.
	PASS	Hardware setting and attached cable type match Packet Gateway circuit pack administration.

Link Status Test (#601)

This test determines the state of the call control signaling link for X.25 Packet Gateways.

This test determines if the signaling link is connected or disconnected. If the link is connected, this test causes a test frame (called an XID frame) to be sent to the Packet Gateway circuit pack over the signaling link. The test passes if the signaling is connected and a test frame response is received by the switch. The test fails if the signaling link is disconnected or no response if received from the circuit pack.

This test is non-destructive.

Table 9-276. TEST #601 Link Status Test

Error Code	Test Result	Description/ Recommendation
2012	ABORT	Internal System Error. 1. Retry the command at 1-minute intervals a maximum of 5 times. 2. If the test continues to abort, escalate the problem.
2100	ABORT	The necessary system resources to execute the test could not be allocated. 1. Retry the command at 1-minute intervals a maximum of 5 times. 2. If the test continues to abort, escalate the problem.
2	FAIL	The X.25 call control signaling link is disconnected. 1. Reexecute the test 5 times at 1-minute intervals. 2. If the test continues to fail, execute the “Packet Interface Test’’ to determine if the problem is due to the circuit pack. If the test fails, see repair procedures for Packet Interface Test. 3. If the Packet Interface Test passes, then see repair procedures for Packet Control circuit pack and Packet Bus.

Continued on next page

Table 9-276. TEST #601 Link Status Test — *Continued*

Error Code	Test Result	Description/ Recommendation
3	FAIL	No response was received to transmitted test frame for Call control link. 1. Repeat the test 5 times. 2. If the test continues to fail for this reason, try resetting the circuit pack. 3. If test continues to fail for this reason, try replacing the circuit pack.
	PASS	The X.25 call control signaling link is connected and a correct response was received by the switch to a test packet.

PGATE-PT (Packet Gateway Port)

MO Name As It Appears in Alarm Log	Alarm Level	Initial System Technician Command to Run (a)	Full Name of MO
PGATE-PT	MAJOR	test port UUCSSpp long	X.25 Port Maintenance
PGATE-PT	MINOR	test port UUCSSpp long	X.25 Port Maintenance
PGATE-PT	WARNING	test port UUCSSpp	X.25 Port Maintenance

a. *UU* is the universal cabinet number (1 for PPN, 2 - 44 for EPNs). *C* is the carrier designation (A, B, C, D, or E). *SS* is the number of the slot in which the circuit pack resides (01 to 21). *pp* is the two digit port number (01, 02, ...).

The TN577 Packet Gateway circuit pack provides connectivity from the switch to adjuncts or to other switches in a Distributed Communications System (DCS).

Ports on the TN577 perform statistical multiplexing of data connections based on the X.25 data communication protocol standard. An X.25 Access Link must be established between the Packet Gateway port and the adjunct or DCS switch prior to the connection of any data sessions on the port. Such data connections consist of X.25 packet-data streams which entering the Packet Gateway port and are transported by Packet Gateway circuitry to the packet bus and then to other endpoints on the bus. An X.25 Access Link is illustrated in the description of the Link Status Test (#614).

Packet Gateway Applications

The following applications and adjuncts use packet gateway ports:

- AUDIX
- Call Management System (CMS)
- Distributed Calling System (DCS)
- ISDN Gateway Adjunct
- Message Server

Packet Gateway Configurations

Figure 9-79 below through Figure 9-84 on page P-106 show typical configurations utilizing Packet Gateway circuit packs. Not shown in the diagrams is the fact that X.25 links connect to the SPE via the packet bus and the TN1655 Packet Interface circuit pack. In addition to the configurations shown, a long distance modem can be connected directly to one of the external ports on the Packet Gateway circuit pack to connect to data networks including private lines, Dataphone II networks, and Digital Data Service (DDS) networks. Disregard the references to notes in the following figures.

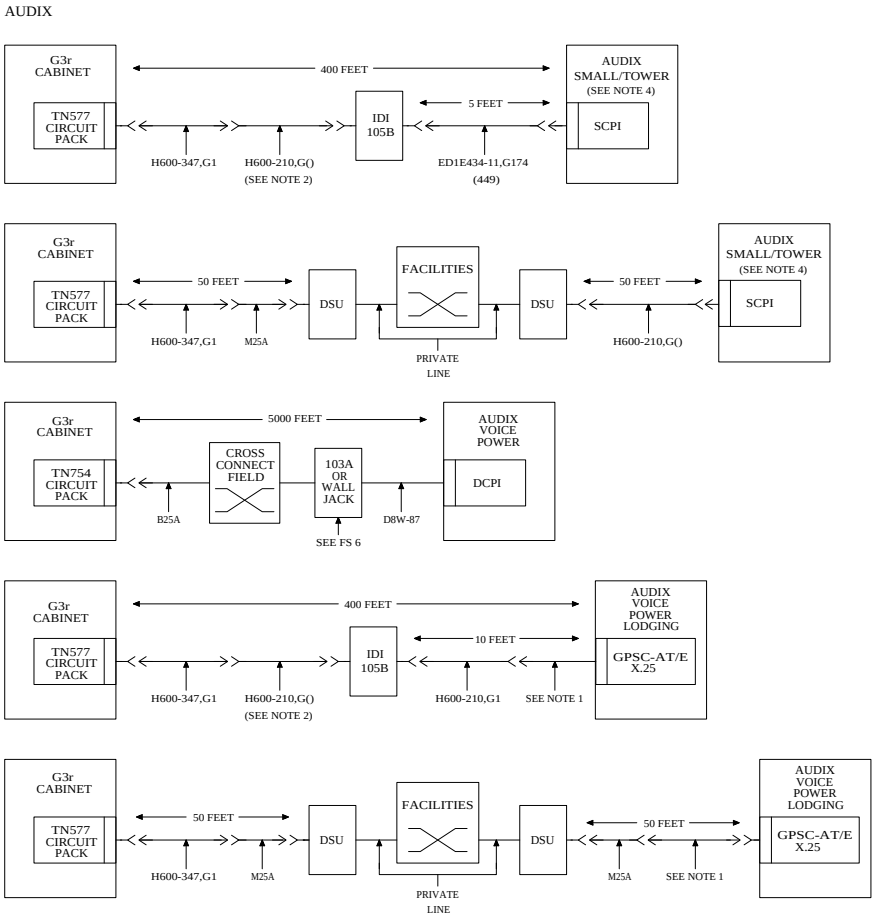

Figure 9-79. Typical Direct Connections to Adjuncts

Adjuncts can be directly connected to one of the external ports on the Packet Gateway circuit pack using a null modem or limited-distance modem. This is the preferred method for connecting adjuncts located near the switch. Similar configurations are used to connect to CMS, Message Server, and ISDN Gateway.

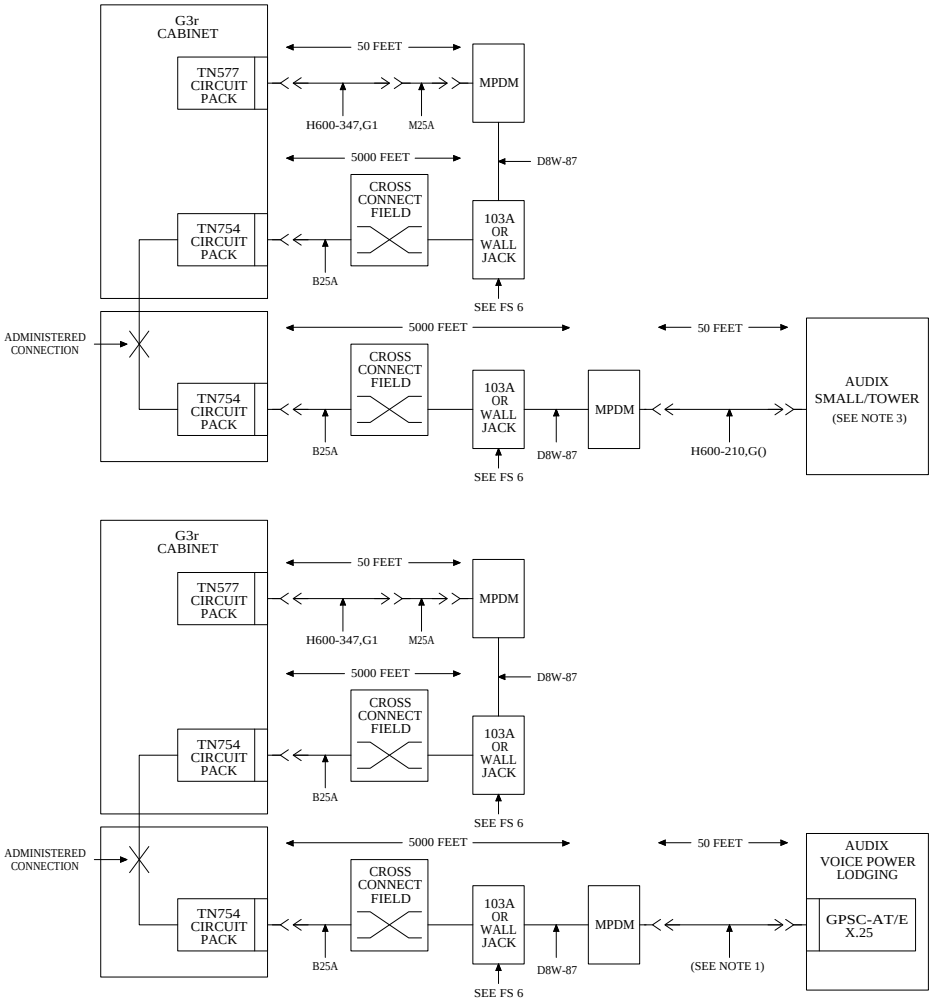

Figure 9-80. Typical Switched Connections to Adjuncts

With the above configurations, the RS423 interface on the Packet Gateway circuit pack can be switched via administered connection to any DCP Mode 2 digital

endpoint on the switching network. Similar configurations are used to connect to CMS, Message Server, and ISDN Gateway.

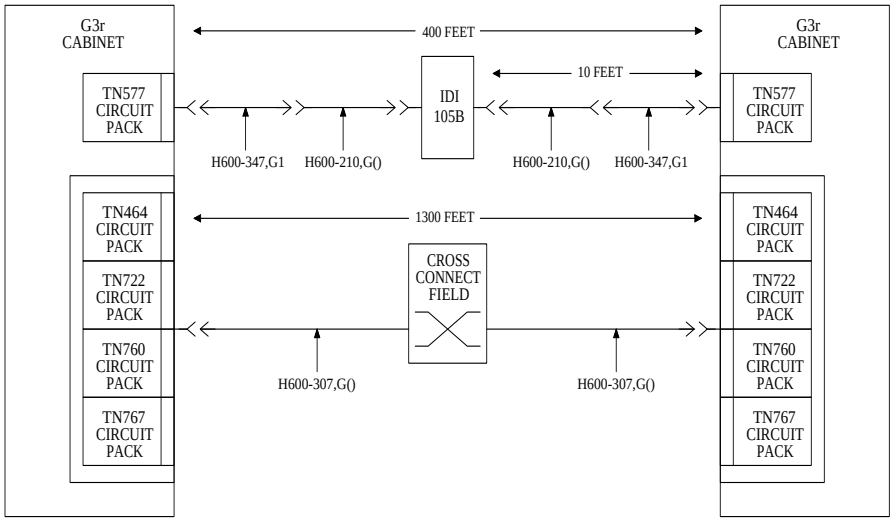

Figure 9-81. Typical G3r-to-G3r DCS Connections Using BX.25 Signaling

In this configuration, the BX.25 link is switched over the TDM bus to a DS1 port and over a DS1 facility to another G3r switch. The Packet Gateway can use only DMI Mode 1 on the TDM bus.

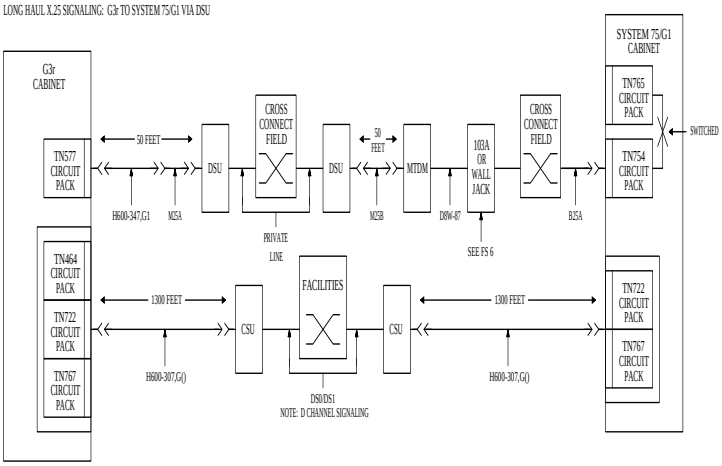

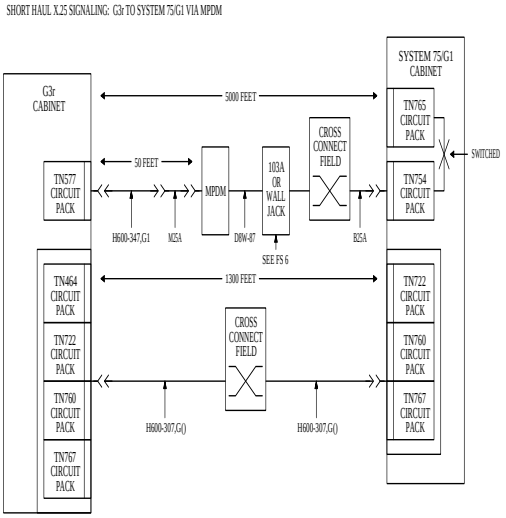

Figure 9-82. Typical G3r-to-System 75/G1 DCS Connections Using BX.25 Signaling and Mode Conversion

To connect a DCS signaling link to a System 75/G1 or System 85/G2 a DS1 facility, the BX.25 link data must be converted for transmission using DMI Mode 2. This is accomplished by using an MPDM and a Digital Line circuit pack. The link is then switched over the TDM bus to a DS1 port.

This method is also used for connecting to remote adjuncts. The channel on the DS1 facility is switched via hop channel on the switch connected to the adjunct.

DCS systems that use ISDN-PRI signaling use a TN464 Universal DS1 circuit pack and do not require a Packet Gateway.

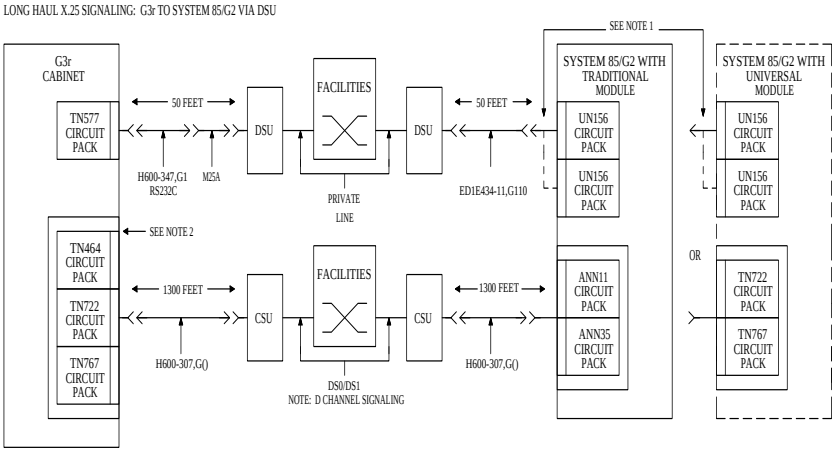

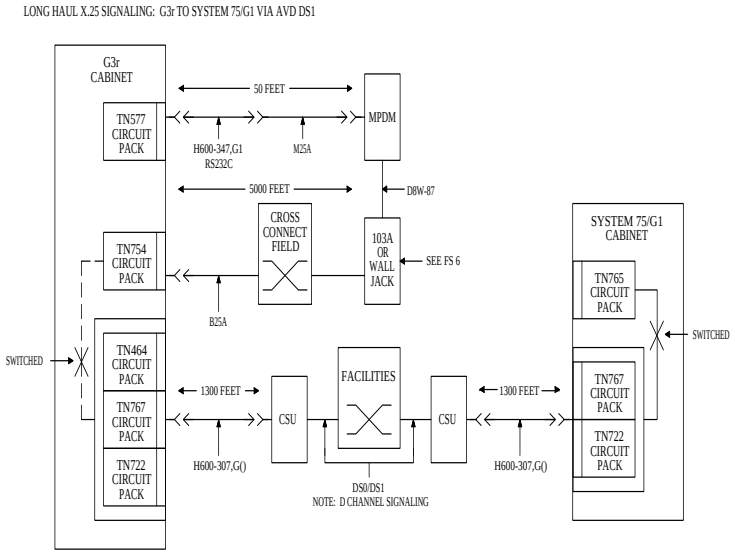

Figure 9-83. Typical G3r-to-G1/G2 DCS Connections Using BX.25 Signaling and Mode Conversion

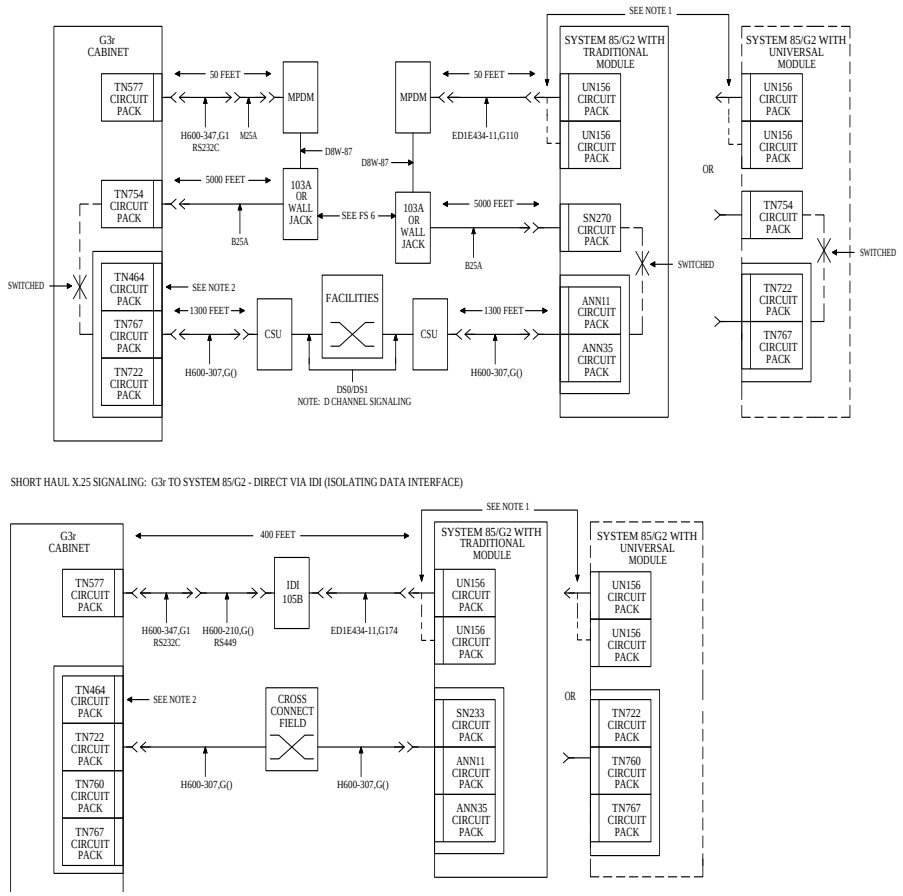

SHORT HAUL X.25 SIGNALING: G3r TO SYSTEM 85/G2 - DIRECT VIA IDI (ISOLATING DATA INTERFACE)

Figure 9-84. Typical G3r-to-System 85/G2 DCS Connections Using BX.25 Signaling and Mode Conversion

Link-Associated Maintenance Objects

Each link is made up of a chain of several different maintenance objects. The **list sys-link** and **status sys-link** commands can be used to identify the specific components that make up a specific link. All X.25 links utilize the following maintenance objects:

— PKT-INT

— The PPN PKT-BUS

— The PKT-BUS of the port network housing the packet gateway

— PGATE-BD

— PGATE-PT

Certain configurations may also use some of the following:

— TDM-BUS

— DS1-BD

— UDS1-BD

— TIE-DS1

— ISDN-LNK

— ISDN-TRK

When investigating link problems, first resolve any problems existing at higher levels such as PKT-INT and PKT-BUS, and then proceed to problems at lower levels such as ISDN-TRK.

Identifying Maintenance Objects That Make Up a Link

When the location of the port and the channel number of an X.25 link is known, the **status sys-link** command can be used to identify all of the components in the path traveled by the link. Refer to the SYS-LINK section in this chapter for more guidance in troubleshooting links.

Service problems may be reported in several different ways. Generally a problem will be associated with a local adjunct, an alarmed link that involves hop channels, or an alarmed port or trunk. The following procedures show how to locate components of a link starting with:

— The adjunct or DCS link name

— An associated hop channel number

— A port or trunk

Once the MOs making up the link are known, inspect the alarm and error logs or run tests for each maintenance object located on a suspect link. These procedures do not include isolating problems located on adjuncts or other switches. The steps sometimes require logins on different switches or adjuncts. In this discussion, the term machine refers to a switch or an adjunct.

The packet interface (PKT-INT), packet bus (PKT-BUS), and TDM-BUS are not covered by these procedures because they are part of the fabric for the connections. These components should be tested first if they are alarmed or reporting errors.

Tracing a Link to a Given Adjunct or DCS Link

1. **display adjunct-names**

   Locate and record the adjunct name that was reported and the application type. If the problem is with DCS this step can be ignored. DCS will probably be called DCS.

2. **display communications-interface processor-channels**

   - Find the row with the application name found in the previous step. The application name if it is listed will be in the identification field.
   - Record the processor-channel number, application, interface link and channel, adjunct name and machine ID. For the message server adjunct there may be more than one processor link.

3. **display communications-interface links**

   - Find the line that has the link found in the previous step.
   - Record the link, extension, destination number or TAC and the identification field. The TAC may be combined with a remote extension. Run **display dialplan** if there are questions as to valid TAC numbers.

     If the destination number is a local extension, then it is probably a local data-module. This can be verified by running **display data-module ext**.

4. **display communications-interface hop-channels**

   Check if the link and processor channel found in the previous steps is listed in this form. If it isn't, then the major pieces of the link on this switch have been located. If the link is connected to another link, copy down all the information for that hop-channel. With the link and channel that are connected repeat steps 2 - 4. This should be repeated until there are no more links that are connected to any of the links uncovered to this point. For each link that goes to another machine follow the next instructions in the next section to obtain the MOs on the other machines. If the machine is not a Generic 3, consult the repair procedures for that machine.

5. For each extension located run **display data-module ext** to find the port and the board. The port and board should then be tested to find out if this MO is having problems. The repair section for each MO should be consulted to understand and fix the problem.

6. For each TAC located, run **display trunk-group tac** tac# to find the trunk group. The alarm and error logs should be checked for entries against this trunk group. Alternatively, the trunk group can be tested using **test trunk-group** trunk number. Refer to the repair section for that trunk type if problems are found.

Tracing a Link When a Hop-Channel Is Involved

This problem may be reported in several different ways. Typically a given application on switch "A" in a DCS configuration is down. Using the steps in the section following this one, you find that the application connects to switch "B" over channel "x." This section shows how to continue the tracing procedure on switch B. The extension on switch B that terminates the physical link may or may not be known. If the number of the channel to B is not known, begin at the second step.

1. **display communications-interface hop-channels**

   Find the link that uses the known channel. Record the link/channel pairs

2. **display communications-interface links**

   Look at the links found in the previous step. One of the links should point back to the other switch or adjunct. Record the X.25 extension, destination number and identification field for each link.

   If a destination number is specified, verify that it is a valid extension on the other machine. If the other machine is a DEFINITY Generic 3, follow the procedure in the section that follows this one. If not, refer to the maintenance maintenance documentation for the other machine.

   If the link or channel is not known, scan the identification field for the known machine name that has link connectivity to this machine. For each line of data that matches, record the entire line. For links with remote destination numbers, remove the TAC and verify that the number is valid on the other machine. For Generic 3 machines this can be done using the procedure in the section following this one. If there are no matches, you must go back to the other machine and find out the channel number or the application that uses the channel before continuing.

3. **display station** extension

   Record the port associated with the extension.

4. If the destination number field is not "external," then the number is a valid extension on another machine. The destination number can also be combined with a TAC. Run **list trunk-group** to find if a TAC is prepended to the destination number. Record the trunk-group if a TAC has been prepended.

5. Check the alarm and error logs for each extension, trunk-group or link. If alarms or errors are present follow the repair procedures for that MO.

6. If the link continues to another machine, Use the channel number, application, and identification field to continue the trace there. Repeat this procedure for Generic 3 machines.

Tracing a Link Given a Port or Trunk

1. **display port UUCSSpp**
   a. Find out if the port connects to a data module or a trunk.
   b. Record its extension or trunk group.
   c. If it is a trunk group, run **display trunk** group#/member#. Record the trunk access code (TAC) and go to the next step.
2. **display communications-interface links**
   a. Find the link that has the extension, destination number or TAC located in the previous step. The TAC may be combined with a remote extension.
   b. Record the link, X.25 port, destination # or TAC and identification field.

      If the administration was done according to the documentation guidelines, the identification field may contain what application is running. This will give you some idea as to what other problems might be related and the priority for fixing this problem.

      If the destination number is a local extension, then it is probably a local data-module. If the number is remote or the word "external", look at the comment field for an indication of the data-module's extension or administered connection. More information on the local extension can be obtained by running **display data-module extension**.
3. **display communications-interface processor-channels**
   a. Find the row with the link number found in the previous step.
   b. Record the processor-channel number, application, interface link and channel, adjunct name and machine ID. For the Message Server Adjunct there can be more than one link.
4. **display communications-interface hop-channels**
   a. Check if the link and processor channel found in the previous steps is listed in this form. If it isn't, then the major pieces of the link on this switch have been located. If the link is connected to another link, copy down all the information for that hop-channel. With the link and channel that are connected, repeat steps 2 - 4. This should be repeated until there are no more links that are connected to any of the links of concern.
   b. For each extension located run **display data-module ext** to find the port and the board. The port and board should then be tested to find out if this MO is having problems. The repair section for each MO should be consulted to understand and fix the problem.

c. For each TAC located, run **display trunk-group tac tac#** to find out the trunk group. The trunk group should then be tested using **test trunk-group E4trunk number**. The repair section should be consulted to understand and fix problems found for an MO.

X.25 Protocol Errors

All of the X.25 port errors are generated as part of error procedures specified by the X.25 protocol. The reader is referred to the X.25 specification for more detailed explanation of these errors and their implications. These errors are logged as a result of errors detected by the far end and received by the port in X.25 packets, and as a result of errors detected by the near end and sent by the port in X.25 packets to the far end.

All of these errors are conveyed in three types of X.25 packets:

- Restart Request (Indication) Packets
- Reset Request (Indication) Packets

Restart packets cause reinitialization of the X.25 packet layer (Level 3) causing all links to be reset which are associated with the X.25 link. These packets are sent when the packet layer is first initialized or when certain errors are detected. Reset packets are sent to reinitialize a virtual circuit in the data transfer state when specified errors are detected on the virtual circuit.

Errors are conveyed in the Cause and Diagnostic fields of these packets. The Cause Field indicates the reason for the error and the Diagnostic Field provides a further explanation of the error. Cause and diagnostic codes can be generated by either a network (DCE) or a network user (DTE). Code values are segmented such that those generated by a DTE or a DCE can be distinguished. Cause codes are further segmented to distinguish between causes delivered to a DTE which were generated by a private or public network. Essentially, a private network utilizes the PDN cause code values by offsetting the PDN value by 128. DEFINITY G3 assumes the role of a private network when generating the causes whether its side of the interface is administered as a DTE or a DCE.

A port administration option allows logging of X.25 errors to be selectively turned on or off for individual ports. A customer may choose to turn on error logging only for important network interfaces and hosts in order to capture a complete error history about these ports. For less critical interfaces, a customer may choose to turn off error logging to prevent cluttering the system error log. In this case, error logging can be turned on as needed to diagnose trouble reports with the interface. Error logging is not turned on as the administrative default for this option on X.25 Packet Gateway ports.

Hardware Error Log Entries and Test to Clear Value

PGATE Port Error Log Entries

Error Type	Aux Data	Associated Test	Alarm Level	On/Off Board	Test to Clear Value
0*	0	Any	Any	Any	test port UUCSSpp s
1 (a)	0	Packet Gateway Port Local Loop-Around (#610)	MINOR	ON	test port UUCSSpp l r 3
18	0	busy port UUCSSpp	WARNING	ON	release port UUCSSpp
257 (b)	0				
513 (c)	1, 2	Level 1 State Query Test (#613)	MINOR	OFF	test port UUCSSpp r 2
769 (d)	0		WARNING	OFF	(d)
1024 to 1289 (e)	0, 3, 35768, 35769				
1537 (l)	Any	Session Status Query Test (976)	WARNING	OFF	
1538 (l)	0	Session Status Query Test (976)	MINOR	OFF	
2049 to 2303 (f)	1-64				
2305 to 2364 (g)	1, 129				
2305 to 2364 (h)	57, 185				
2305 to 2364 (i	35768				

Continued on next page

PGATE Port Error Log Entries

Error Type	Aux Data	Associated Test	Alarm Level	On/Off Board	Test to Clear Value
2560 to 2815 (j)	1-4156, 39865-39924				
2817 (k)		Link Status Test (#614)	MINOR	OFF	test port UUCSSpp r 2
3585	0-1	Packet Gateway Switched Port Loop-Around Test (#599)	MAJOR	ON	test port UUCSSpp l r 3

* Run the Short Test Sequence first. If all tests pass, run the Long Test Sequence. Refer to the appropriate test description and follow the recommended procedures.

Notes:

a. This error occurs when the Packet Gateway Port Local Loop-Around Test (#610) fails. Execute the **test port UUCSSpp long** command and see the repair procedures for test #610.

b. This error occurs when a Packet Gateway port detects an overrun or an underrun condition that may be indicative of a hardware problem on the port. The Packet Gateway Port Local Loop-Around Test (#610) should be executed via the **test port UUCSSpp long** command to determine if a hardware problem exists. See the repair procedures for test #610.

c. This error occurs when the Level 1 State Query Test (#613) fails or when the Packet Gateway port detects that the Clear To Send (aux data 1) or Data Carrier Detect (aux data 2) lead is "low" in the RS423 cable connected to the port. This problem can be caused by cabling, data set, or transmission facility faults. For an RS423 connection, execute the **test port UUCSSpp long** command and see the repair procedures for Packet Gateway Port Remote Loop-Around Test #611.

   If the port speed is administered as a switched port then the CTS will always be high but the DCD will be low only if there are transmission problems with the far-end. If this occurs, execute the **test port UUCSSpp long** command and see the repair procedures for Packet Gateway Switched Port Loop-Around Test #599.

d. This error occurs when the port receives an invalid frame. A frame is invalid if it is greater than the maximum length, contains CRC errors, or violates the link level protocol. If this error occurs repeatedly, an off-board WARNING alarm is raised against the port. The Packet Gateway Port Remote Loop-Around Test (#611) can be used to isolate the problem. Before executing the **test port UUCSSpp long** command, refer to the repair procedures for test #611 for special instructions regarding the execution of this test. Once the repair has been verified as described in the repair procedures for test #611, the alarm can be cleared by executing the **test port UUCSSpp long clear** command.

e. These errors occur when an X.25 Restart packet is received or sent by the switch due to a Local Procedure error or Network Congestion. Restarts are sent to initialize the packet layer interface and cause all calls on the interface to be cleared. A Local Procedure error usually indicates that one side of the interface has detected a protocol procedural error. Network Congestion normally indicates that the attached network is severely overloaded and has taken a control measure which entails restarting the X.25 interface. The value of the X.25 diagnostic code (0 to 255) contained in each packet is used to offset the base (1024) to produce unique error types. The auxiliary data value indicates the cause of the error and whether the error was sent or received. The auxiliary data value is encoded as follows:

0	Local Procedure Error received.
3	Network Congestion received.
35768	Local Procedure Error sent.
35771	Network Congestion sent.

f. These errors are reported for processor/hop channels and is consistent with the 1984 CCITT X.25 Recommendation. This error is reported when an X.25 reset packet is received due to an DTE Originated Error (i.e., cause value). The value of the diagnostic code (1 to 255) contained in each packet is used to offset the base (2048) to produce unique error types. Note the diagnostic code of "0" (No Additional Information) is not logged as this is considered a normal resetting circumstance. Only nonzero diagnostics are logged in this case - indicating resetting due to a detected error. The auxiliary data field of the log entry contains the affected logical channel number.

g. These errors are reported only for PVCs and indicate loss of end-to-end communication on the PVC. This error indicates that the PVC is "Out Of Order" due to a network or remote DTE problem (e.g., the remote DTE is unattached). These errors are consistent with the 1984 CCITT X.25 Recommendation. The logical channel number (1 to 64) associated with the PVC is used to offset the the base (2304) to produce unique error

types. The auxiliary data field for errors of this type contain "1" when a Public Network code has been received. The auxiliary data field contains "129" if a Private Network cause code has been received.

h. These errors are reported only for PVCs and indicate loss of end-to-end communication on the PVC. This error indicates that the PVC is "Network Out Of Order" due to a network problem. These errors have error types 2305 through 2364 and are consistent with the 1984 CCITT X.25 Recommendation. The logical channel number (1 to 64) associated with the PVC is used to offset the the base (2304) to produce unique error types. The auxiliary data field for errors of this type contain "57" when a Public Network code or "185" when a Private Network code has been received.

i. These errors are only reported for PVCs and indicate the loss of end-to-end communication on the PVC. This error indicates that no response is received from the endpoint when the switch attempts to reset a PVC. This error is reported to the switch by the Packet Gateway port every 6 minutes if no response continues to be received. Errors of this type normally indicate an administrative mismatch for the PVC between the switch and the attached endpoint/network. These errors have error types 2305 through 2364. These errors are consistent with the 1984 CCITT X.25 Recommendation. The logical channel number (1 to 64) associated with the PVC is used to offset the base (2304) to produce unique error types. The auxiliary data field of the log entry contains "35768" for errors of this type.

j. This error is reported when an X.25 Reset packet is received or sent due to a Local Procedure Error (i.e., cause value 5 for Public Network or 133 for Private Network Causes). A Local Procedure error usually indicates that one side of the interface has detected a protocol procedural error. The value of the diagnostic code (0 to 255) contained in each packet is used to offset the base (2560) to produce unique error types. The auxiliary data field indicates whether the error was sent or received by the switch,

which logical channel number was affected by the error, and whether a Private or Public Network cause value was used. The auxiliary data value is encoded as follows:

1-64	The corresponding Public Network cause value is received over the indicated logical channel number.
4097-4156	The corresponding Private Network cause value is received over the indicated logical channel number. The logical channel number (1-64) is offset by the value 4096.
39865-39924	The corresponding Private Network cause value is sent over the indicated logical channel number. The logical channel number (1-64) is offset by the value 39864. The switch does not generate any Public Network causes.

k. This error occurs when the Link Status Test (#614) fails. An X.25 Access Link is considered failed if it is disconnected at the link level and cannot be quickly reconnected. This failure is usually related to faults in the external port cabling, data set, transmission facility, or due to a far-end equipment failure. If the link fails, a MINOR off-board alarm is raised against the port. Execute the **test port UUCSSpp long** command and see the repair procedures for test #611.

l. These errors occur when at least one session associated with this port is down. Error 1537 is posted when at least one but not all sessions are down. Error 1538 is posted when all the sessions on the link associated with this port are down, but the link itself is not down. The commands **status pgate-port** or **status link** can be used to isolate the session(s) that are down. Once the session information is available, appropriate actions related to the session involved may be followed.

System Technician-Demanded Tests: Descriptions and Error Codes

Always investigate tests in the order presented in the table below when inspecting errors in the system. By clearing error codes associated with the *PDATA Port Local Loop-Around Test* for example, you may also clear errors generated from other tests in the testing sequence.

Order of Investigation	Short Test Sequence	Long Test Sequence	D/ND*
Packet Gateway Port Local Loop-Around Test (#610)		X	D
Packet Gateway Switched Port Loop-Around Test (#599)		X	D
Level 1 State Query Test (#613)	X	X	ND
Link Status Test (#614)	X	X	ND
Packet Gateway Port Remote Loop-Around Test (#611)		X	D
(Local Loopback, Digital and Remote Loopbacks)			
Session Status Query Test (#976)	X	X	ND
Session Restart Test (#977)		X	D

* D = Destructive; ND = Nondestructive

Packet Gateway Switched Port Loop-Around Test (#599)

This test is destructive.

This test verifies that the Packet Gateway port can send and receive data on the TDM bus.

Failure of this test indicates a possible failure of the Packet Gateway circuit pack, the TDM Bus, or the digital port on the Maintenance/Test circuit pack.

This test aborts when calls are in progress on the port, or if the signaling link the port is connected to the port. This test also aborts when executed on a port whose administered speed is other than ‘‘switched.

Table 9-277. TEST #599 Packet Gateway Switched Port Loop-Around Test

Error Code	Test Result	Description/ Recommendation
1000	ABORT	The port is in use for a call or the X.25 Access Link is connected. Execute **status packet-gateway-port** UUCSSpp to determine when the port is available for testing. 1. Retry the command when the port is idle. The port may be forced to the idle state by executing a **busyout port UUCSS** command. The **busyout port** command is destructive causing all calls and links associated with the port to be torn down. 2. If the test continues to abort, escalate the problem.
1005	ABORT	The configuration for this test is incorrect. 1. Verify that the port under test is configured as a switched port. This error code will result when the port under test is configured as an RS423. 2. If this is supposed to be a switched port and it is not administered that way change the configuration using **change data-module ext**. The ‘‘baud’’ field should display ‘‘switched’’. 3. If the port is administered as a switched port and this error code is returned, escalate the problem.

Continued on next page

Table 9-277. TEST #599 Packet Gateway Switched Port Loop-Around Test — *Continued*

Error Code	Test Result	Description/ Recommendation
1340	ABORT	The Maintenance Test Board digital port was not available.
1341	ABORT	Allocation of timeslots failed.
1342	ABORT	Connection of ports to timeslots failed.
2000	ABORT	Uplink message not received before time limit.
2012	ABORT	Internal System Error. 1. Retry the command at 1-minute intervals a maximum of 3 times. 2. If the test continues to abort, escalate the problem.
0	FAIL	Received data test pattern does not match transmitted data test pattern. 1. Retry command at 1-minute intervals a maximum of 3 times. 2. If it still fails, eliminate that the problem is with PKT-BUS and M/T-DIG by following the repair procedures for those MOs. 3. If they pass, replace the board. Deciding when to replace the board must be balanced against traffic on the other ports. 4. If the test continues to fail after replacing the circuit pack, escalate the problem.
	PASS	The circuitry of the port tested, and its connectivity across the packet bus, is functioning properly.

Packet Gateway Port Local Loop-Around Test (#610)

This test is destructive.

This test verifies the functionality of a port circuit on the Packet Gateway circuit pack. When the switch sends the test request, the Packet Gateway circuit pack automatically loops back the signal at the port as shown in Figure 9-85 below. Failure of this test indicates the existence of a fault in the port hardware on the circuit pack.

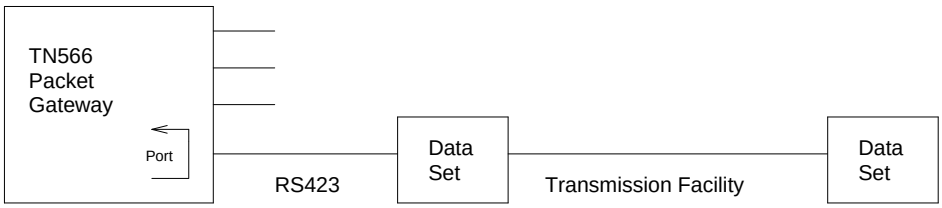

Figure 9-85. Packet Gateway Port Local Loop-Around Test

This test aborts if calls are using the port or if the X.25 Access Link associated with the port is connected. To avoid this, first enter **busyout data-module** extension or **busyout port** UUCSSpp or **busyout link** link#, which will cause all calls and links using the port to be torn down.

Table 9-278. TEST #610 Packet Gateway Port Local Loop-Around Test

Error Code	Test Result	Description/ Recommendation
1000	ABORT	The X.25 Access Link is connected or the port is in use for a call. Execute **status packet-gateway-port UUCSSpp** to determine when the port is available for testing. 1. Retry the command when the port is idle. The port may be forced to the idle state by executing a **busyout port UUCSSpp** command. This command is destructive causing all calls and links associated with the port to be torn down. 2. If the test continues to abort after executing **busyout port UUCSSpp**, escalate the problem.
2000	ABORT	Response to the test was not received from the Packet Gateway circuit pack within the allowable time period. 1. If this result occurs repeatedly, attempt to reset the circuit pack if the other ports on the board are not in use (Yellow LED is off). Reset the circuit pack by issuing the **busyout board UUCSS** and the **reset board UUCSS** commands. 2. If this result occurs again, replace the circuit pack. 3. If the test continues to abort after replacing the circuit pack, escalate the problem.
2012	ABORT	Internal System Error. 1. Retry the command at 1-minute intervals a maximum of 3 times. 2. If the test continues to abort, escalate the problem.

Continued on next page

Table 9-278. TEST #610 Packet Gateway Port Local Loop-Around Test — *Continued*

Error Code	Test Result	Description/ Recommendation
	FAIL	The Packet Gateway circuit pack has detected a failure in the execution of the test. 1. If the test fails repeatedly, attempt to reset the circuit pack if the other ports on the board are not in use (Yellow LED is off). Reset the circuit pack by issuing the **busyout board UUCSS** and the **reset board UUCSS** commands. 2. If the test fails again, replace the circuit pack. 3. If the test continues to fail after replacing the circuit pack, escalate the problem.
	PASS	The circuitry of the port tested is functioning properly.

Packet Gateway Port Remote Loop-around Test (#611)

This test is destructive.

This test checks the integrity of cabling and devices external to the Packet Gateway port hardware. Packet Gateway firmware executes this test on demand by sending a test frame which is looped back to the Packet Gateway by a loop-around that has been externally activated or installed at one of several points in the external connectivity (see loopbacks A, B and C in Figure 9-86 below). The test passes when the sent and received test frames are identical. The test fails if the sent and received test frames do not match, or if no test frame is received prior to a time out.

If you suspect a problem in cabling or external devices, then repeat this test at points that are progressively further from the PGATE port until either a failure point is identified or the integrity of the entire path is verified. Certain site configurations may require teamwork with those who maintain the off-site transmission facilities.

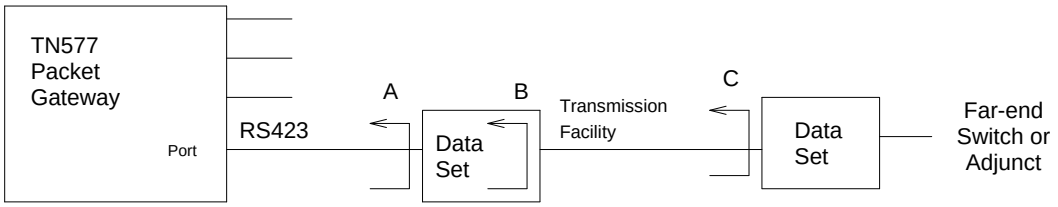

Figure 9-86. Packet Gateway Port Remote Loop-Around Test

Manual activation of the loopback is required for this test. If available, the Local Loopback (B in Figure 9-86 above), Digital Loopback (C), and Remote Loopback (D) capabilities of external data sets may be used in conjunction with this test for fault isolation. Execution of this test with the data set in the Local Loopback mode verifies the integrity of the external port cabling. Execution of this test with the data set in the Digital Loopback mode verifies the integrity of the data set. Execution of this test with the far-end data set in the Remote Loopback mode verifies the integrity of the transmission facility.

For this test to run, the port or link must be busied out and the ‘‘Remote Loopback’’ field on the data-module form must be set to ‘‘y.’’ This field should only be set to ‘‘y’’ when the external loopback switch has been activated for the test, and should be changed back to ‘‘n’’ when testing is completed and the external loopback has been deactivated.

To test to an MPDM attached to a Packet Gateway port:

1. Enter **busyout data-module** extension or **busyout port UUCSSpp** or **busyout link** link#.
2. Set the switch on the MPDM to local loopback.
3. Enter **change data-module** extension and set the “Remote Loop-Around Test’’ field to ‘‘y.’’
4. Enter **test data-module** extension **long** or **test port UUCSSpp long** or **test link** link# **long**.
5. When finished testing, enter **change data-module** extension and set the “Remote Loop-Around Test’’ field to ‘‘n.’’
6. Enter **release data-module** extension or **release port UUCSSpp** or **release link** link#.

To test through an administered connection to an MPDM attached to an adjunct (see "Packet Gateway Configurations" on page P-100 at the beginning of the PGATE-PT section):

1. Enter **busyout data-module** extension or **busyout port UUCSSpp** or **busyout link** link#.
2. Enter **change data-module** extension and set the “Remote Loop-Around Test’’ field to ‘‘y.’’
3. Set the switch on the MPDM to local loopback.
4. Enter **disable administered-connection** adm-conn#.
5. Attach a loopback plug to the MPDM and set the switch on the MPDM to remote loopback.
6. Enter **enable administered-connection** adm-conn#.
7. When the administered connection becomes established at the MPDM, set remote loopback to normal.
8. Enter **test data-module** extension **long** or **test port UUCSSpp long** or **test link** link# **long**.
9. When finished testing, enter **change data-module** extension and set the “Remote Loop-Around Test’’ field to ‘‘n.’’
10. Enter **release data-module** extension or **release port UUCSSpp** or **release link** link#.

If a loopback plug is not available, one can be made using a break-out box or hand-made connector. To loop back an RS232 cable, tie the following pins together:

RS232 Cable Loopback

Pins to Join	Pin Names
2-3	Transmit-data, Receive-data
4-5	Request-to-send, Clear-to-send
8-20	Carrier-detect, data-terminal-ready
15-17-24	Transmit-clock, Receive-clock, Transmit-clock

To loop back an RS449 cable (often used to connect AUDIX to an IDI), connect the following pins.

RS449 Cable Loopback

Pins to Join	Pin Names
4-6	SD-A', RD-A
5-8-17	ST-A, RS-A', TT-A'
7-9	RS-A'', CS-A
12-13	TR-A', RR-A
22-24	SD-B', RD-C
23-26-35	ST-C, RT-C, TT-B'
25-27	RS-B', CS-C
30-37	TR-B', SC

Table 9-279. TEST #611 Packet Gateway Port Remote Loop-Around Test

Error Code	Test Result	Description/ Recommendation
1000	ABORT	The port is in use for an X.25 Access Link call or a call is connected. Execute **status packet-gateway-port UUCSSpp** to determine when the port is available for testing. 1. Retry the command when the port is idle. The port may be forced to the idle state by executing a **busyout port UUCSSpp** command. This command is destructive causing all calls and links associated with the port to be torn down. 2. If the test fails again, replace the circuit pack. 3. If the test continues to abort after replacing the circuit pack, escalate the problem.
1005	ABORT	The configuration for this test is incorrect. 1. Verify that the external loopback has been installed or activated. 2. Enter **change data-module** extension and verify that the ‘‘Remote Loop Around Test’’ field displays ‘‘y’’. 3. Repeat the test. 4. When testing is complete, deactivate the external loopback and change the “Remote Loop-Around Test’’ field back to ‘‘n.’’ 5. If the test aborts with this code while the port administration is correctly configured, escalate the problem.
2000	ABORT	Response to the test was not received from the Packet Gateway circuit pack within the allowable time period. 1. If this result occurs repeatedly, attempt to reset the circuit pack if the other ports on the board are not in use (Yellow LED is off). Reset the circuit pack by issuing the **busyout board UUCSS** and the **reset board UUCSS** commands. 2. Consult the repair procedures for the Packet Gateway Local Loop-Around test (#610). 3. If the test continues to abort, escalate the problem.

Continued on next page

Table 9-279. TEST #611 Packet Gateway Port Remote Loop-Around Test — *Continued*

Error Code	Test Result	Description/ Recommendation
2012	ABORT	Internal System Error. 1. Retry the command at 1-minute intervals a maximum of 3 times. 2. If the test continues to abort, escalate the problem.
2100	ABORT	The necessary system resources to execute the test could not be allocated. 1. Retry the command at 1-minute intervals a maximum of 5 times. 2. If the test continues to abort, escalate the problem.
	FAIL	The Packet Gateway circuit pack has detected a failure in the execution of the test. 1. Verify that the Packet Gateway Local Loop-Around test (#610) passes. Follow repair procedures for that test first if it fails. 2. Run test #611 for each external loopback position. If any test fails, then take the action specified for that point: a. Local Loopback (Loopback ‘‘B’’): Replace the external port cabling. b. Digital Loopback (Loopback ‘‘C’’): Replace the data set. c. Remote Loopback (Loopback ‘‘D’’): Investigate potential transmission line problems. If necessary, escalate the problem to the party responsible for maintaining the off-premise transmission network. 3. If the test continues to fail, escalate the problem.

Continued on next page

Table 9-279. TEST #611 Packet Gateway Port Remote Loop-Around Test — *Continued*

Error Code	Test Result	Description/ Recommendation
	PASS	Passing of this test for the following loopbacks indicates the integrity of the following pieces of equipment: 1. Local Loopback (Loopback ‘‘B’’). Packet Gateway port hardware plus cabling. 2. Digital Loopback (Loopback ‘‘C’’). Packet Gateway port hardware plus cabling plus data set. 3. Remote Loopback (Loopback ‘‘D’’). Packet Gateway port hardware plus cabling plus data set plus transmission line. 4. If all the above tests pass, place the port in-service (release port UUCSSpp). Execute the **status packet-gateway-port UUCSSpp** command and verify that the transmission-related error counters are not increasing. Execute the ‘‘Link Status Test (#614)’’ via the **test port UUCSSpp** command. Check out equipment at far-end if this test fails.

Level 1 State Inquiry Test (#613)

This test is non-destructive.

This test determines the state of the transmission facility at the physical layer (Level 1). This test is executed by the Packet Gateway circuit pack for a port on a command from the switch. The test passes when the current status of the Data Carrier Detect (DCD) and Clear To Send (CTS) If either of these leads are low, the test fails.

If the port speed is administered as a switched port then the CTS will always be high but the DCD will be low only if there are transmission problems with the far-end and the link had been up. If this occurs, execute the **test port UUCSSpp long** command and consult the repair procedures beginning at Packet Gateway Switched Port Loop-Around Test #599.

Table 9-280. TEST #613 Level 1 State Inquiry Test

Error Code	Test Result	Description/ Recommendation
2000	ABORT	Response to the test was not received from the Packet Gateway circuit pack X.25 port within the allowable time period. 1. If this result occurs repeatedly, attempt to reset the circuit pack if the other ports on the board are not in use (Yellow LED is off). Reset the circuit pack by performing the **busyout board UUCSS** and the **reset board UUCSS** commands. 2. If this result occurs again, replace the circuit pack. 3. If the test continues to abort after replacing the circuit pack, escalate the problem.
2012	ABORT	Internal System Error. 1. Retry the command at 1-minute intervals a maximum of 3 times. 2. If the test continues to abort, escalate the problem.
2100	ABORT	The necessary system resources to execute the test could not be allocated. 1. Retry the command at 1-minute intervals a maximum of 5 times. 2. If the test continues to abort, escalate the problem.

Continued on next page

Table 9-280. TEST #613 Level 1 State Inquiry Test — *Continued*

Error Code	Test Result	Description/ Recommendation
1	FAIL	The Clear To Send lead is ‘‘low’’ indicating a problem with the data set or the cable attached to the port. 1. Repeat the test. 2. If the test still fails, verify that the data set and the Packet Gateway port are properly attached to the cable and the data set is powered on. 3. Place the data set in the ‘‘Local Loopback’’ mode. Consult the repair procedures for the Packet Gateway Port Remote Loop-Around test (#611). 4. If the test continues to fail, escalate the problem.
2	FAIL	The Data Carrier Detect lead is ‘‘low’’ indicating a problem on the transmission side of the data set. 1. Repeat the test. 2. If the test still fails, verify the integrity of the wiring on the transmission side of the data set. Make sure that the data set is properly attached to the transmission line. 3. If the local transmission wiring is intact, notify the authority responsible for resolving off-premise transmission facility problems. The Packet Gateway Port Remote Loop-Around Test (#611) may be useful in diagnosing this problem. 4. If the test continues to fail, escalate the problem.
	PASS	The Level 1 interface is healthy, both the DCD and CTS leads in the RS423 cable or TDM bus are ‘‘high.’’

Link Status Test (#614)

This test is non-destructive.

This test determines if the X.25 Access Link is connected or disconnected. The switch determines the state of the X.25 Access Link by sending a query to the Packet Gateway circuit pack. This test passes if the X.25 Access Link is connected and fails if it is disconnected.

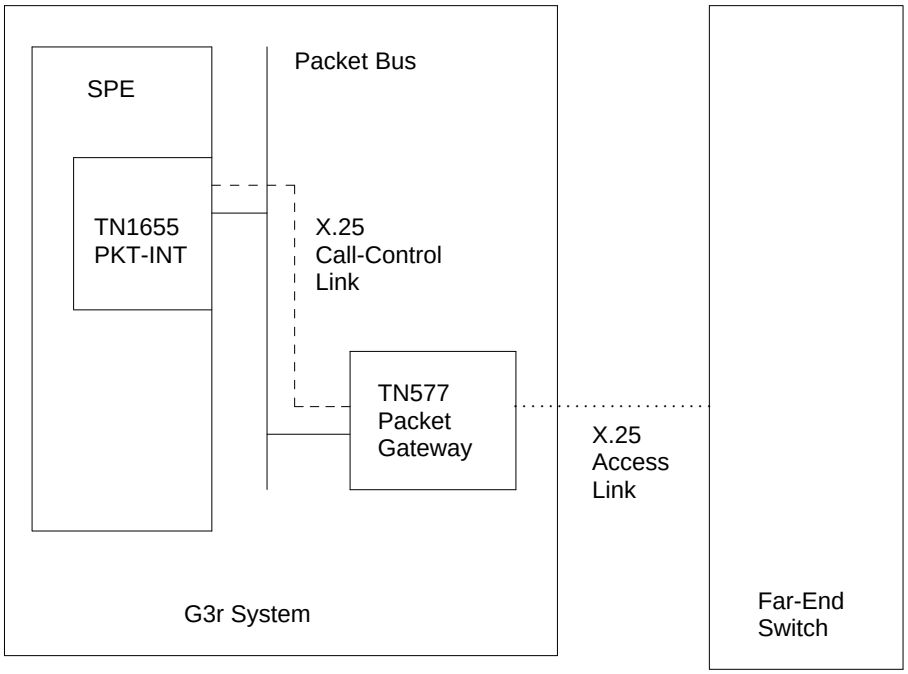

Figure 9-87. Packet Gateway Links

Table 9-281. TEST #614 Link Status Test

Error Code	Test Result	Description/ Recommendation
1006	ABORT	The port is out of service, either due to a hardware failure or the **busyout port UUCSSpp** command. 1. Check if the port has been busied out. If the error log (**display errors** command) contains error type 18 and the alarm log (**display alarms** command) contains an active WARNING alarm for this port, the port has been busied-out. This is a NORMAL abort. 2. If the port has not been busied-out and aborts with this result, execute the Packet Gateway Port Local Loop-Around Test (#610) and the Level 1 State Query Test (#613) via the **test port UUCSSpp long** command. Consult the repair procedures for these tests. 3. If the test continues to abort after following the repair procedures, escalate the problem.
1151	ABORT	The X.25 Call Control Link has failed. It is not possible at the moment to send a message to the Packet Gateway circuit pack to activate this test. 1. Execute the **test board UUCSS** command and see the repair procedures for the X.25 Call Control Link Test (#601). 2. Repeat this test once the X.25 Call Control Link has been re-established, i.e., test #601 passes. 3. If the test continues to abort, escalate the problem.

Continued on next page

Table 9-281. TEST #614 Link Status Test — *Continued*

Error Code	Test Result	Description/ Recommendation
2000	ABORT	Response to the test was not received from the Packet Gateway circuit pack within the allowable time period. 1. If this same result occurs repeatedly, begin by executing the tests as detailed in the earlier section. Consult the individual repair procedures for a specific test if problems are found. 2. If this result continues to occur, attempt to reset the circuit pack if the other ports on the board are not in use (Yellow LED is off). Reset the circuit pack by executing the **busyout board UUCSS** and **reset board UUCSS** commands. 3. If this result occurs again, replace the circuit pack. 4. If the test continues to abort after replacing the circuit pack, escalate the problem.
2012	ABORT	Internal System Error. 1. Retry the command at 1-minute intervals a maximum of 3 times. 2. If the test continues to abort, escalate the problem.
2100	ABORT	The necessary system resources to execute the test could not be allocated. 1. Retry the command at 1-minute intervals a maximum of 5 times. 2. If the test continues to abort, escalate the problem.
	FAIL	Received data test pattern does not match transmitted data test pattern. Same recommendation as for error code 2 above.

Continued on next page

Table 9-281. TEST #614 Link Status Test — *Continued*

Error Code	Test Result	Description/ Recommendation
2	FAIL	The X.25 Access Link is disconnected. 1. Execute the Packet Gateway Port Local Loop-Around Test (#610) and the Level 1 State Query Test (#613) via the **test port UUCSSpp long** command. Consult the repair procedures for these tests. 2. If all tests pass, check far-end switch equipment. Execute the Packet Gateway Port Remote Loop-Around Test (#611) via the **test port UUCSSpp long** command. Consult the repair procedures for this test. 3. If test #611 passes, see the repair procedures for the Packet Control circuit pack and the Packet Bus. 4. If the test continues to fail after following the repair procedures, escalate the problem.
	PASS	The X.25 Access Link is connected.

Session Status Query Test (#976)

This test is non-destructive.

This test determines the state of the sessions on the X.25 Access Link associated with the Packet Gateway port.

This test determines if all the sessions associated with the channels using the X.25 Access Link is up or down. This test passes if the all the sessions are up and fails otherwise.

Table 9-282. TEST #976 Session Status Query Test

Error Code	Test Result	Description/ Recommendation
1124	ABORT	The X.25 access link associated with this Packet Gateway Port is not enabled. 1. Check if the X.25 access link is enabled for this Packet Gateway Port. If the ‘‘enable’’ field on ‘‘display communication-interface link’’ form is ‘‘n’’ for the link entry which contains the data module extension associated with the Packet Gateway Port, then the X.25 access link is not enabled. Set the field to ‘‘y’’ using **change communication-interface link** command and repeat the test. This is a NORMAL abort. 2. If the test continues to abort after following the repair procedures, escalate the problem.
2000	ABORT	Response to the test was not received within the allowable time period. 1. Retry the command at 1-minute intervals a maximum of 5 times. 2. If the test continues to abort, escalate the problem.
2500	ABORT	Internal System Error. 1. Retry the command at 1-minute intervals a maximum of 3 times. 2. If the test continues to abort, escalate the problem.
1	FAIL	At least one (but not all) sessions on the X.25 access link associated with the Packet Gateway Port are down. Same recommendation as for error type 1537.

Continued on next page

Table 9-282. TEST #976 Session Status Query Test — *Continued*

Error Code	Test Result	Description/ Recommendation
2	FAIL	All sessions on the X.25 access link associated with the Packet Gateway Port are down. Same recommendation as for error type 1538.
	PASS	All sessions on the X.25 access link associated with the Packet Gateway Port are up.

Session Restart Test (#977)

This test is destructive.

This test destroys and attempts to restart all the sessions on the X.25 Access Link associated with the Packet Gateway port.

The test attempts to restart all the sessions as long as there is at least one session down on the link. This test aborts if the all the sessions are up.

Table 9-283. TEST #977 Session Status Query Test

Error Code	Test Result	Description/ Recommendation
	ABORT	All sessions are up. This is a NORMAL abort.
1124	ABORT	The X.25 access link associated with this Packet Gateway Port is not enabled. 1. Check if the X.25 access link is enabled for this Packet Gateway Port. If the ‘‘enable’’ field on ‘‘display communication-interface link’’ form is ‘‘n’’ for the link entry which contains the data module extension associated with the Packet Gateway Port, then the X.25 access link is not enabled. Set the field to ‘‘y’’ using **change communication-interface link** command and repeat the test. This is a NORMAL abort. 2. If the test continues to abort after following the repair procedures, escalate the problem.
2000	ABORT	Response to the test was not received within the allowable time period. 1. Retry the command at 1-minute intervals a maximum of 5 times. 2. If the test continues to abort, escalate the problem.
2500	ABORT	Internal System Error. 1. Retry the command at 1-minute intervals a maximum of 3 times. 2. If the test continues to abort, escalate the problem.

Continued on next page

Table 9-283. TEST #977 Session Status Query Test — *Continued*

Error Code	Test Result	Description/ Recommendation
	FAIL	The X.25 Access Link associated with the Packet Gateway Port is down. Same recommendation as for test type 611.
	PASS	All sessions on the X.25 access link associated with the Packet Gateway Port are restarted.

PKT-BUS (Packet Bus)

MO Name As It Appears in Alarm Log	Alarm Level	Initial System Technician Command to Run (a)	Full Name of MO
PKT-BUS	MAJOR	test pkt P l r 2 (a)	Packet Bus
PKT-BUS	MINOR	test pkt P l	Packet Bus
PKT-BUS	WARNING	test pkt P l	Packet Bus

a. where P is the port-network number indicated in the PORT field from the Alarm or Error Log.

The packet bus consists of a single bus, and one such bus appears in each port-network. The packet bus in each port-network is physically independent from those in other port-networks, so each port-network has a separate PKT-BUS maintenance object. This bus supports the following types of connections:

- Logical control links between the SPE and all Expansion Port-Networks (EPN)
- ISDN-BRI D-channel transport (signaling)
- ASAI D-channel transport (signaling)
- ISDN-PRI D-channel (signaling)
- X.25 system adjunct signaling and traffic
- System Access Ports

The TN1655 Packet Interface circuit pack provides the SPE interface to the packet bus. Packet Bus testing depends on the TN771D Maintenance/Test circuit pack, the TN1655 Packet Interface circuit pack, TN570 Expansion Interface circuit pack, and the Packet port circuit packs (TN556 ISDN-BRI Line, TN553 Packet Data Line, TN464 Universal DS1, and TN577 Packet Gateway). Packet Bus tests may abort if some of these are not present in the system. The tests may yield inconsistent results if any of this hardware is defective. The individual test descriptions provide more information.

The interactions between the packet bus and the circuit packs that use the bus are complex. Circuit pack failures can alarm the packet bus, while Packet Bus faults can alarm or interrupt service to one or more circuit packs and their ports and endpoints. The *Packet Bus Fault Isolation and Correction* section of Chapter 5, "Responding to Alarms and Errors" describes Packet Bus maintenance and interactions circuit packs. That section should be referenced for all troubleshooting and repairs. The *Bus Fault Isolation Flowchart* is the normal starting point for experienced technicians. Technicians unfamiliar with the packet bus and its implementation in Generic 3r should study the introductory material before using the flowchart to diagnose and repair packet bus faults.

This section on the PKT-BUS maintenance object is limited to a description of the Error and Alarm Log entries and the test sequence for the packet bus. The following list summarizes some of the important points to consider when working with the packet bus.

- The Maintenance/Test circuit pack (TN771D) is a critical tool for isolating packet bus faults. This circuit pack is present in each port-network of a Critical Reliability system (duplicated SPE *and* PNC. In a Standard Reliability system, the circuit pack may be included as a customer option. If a TN771D is not present, (check with **list config**), *one must be taken to the customer site* to allow for proper fault isolation. *Packet Bus Fault Isolation and Correction* in Chapter 5, "Responding to Alarms and Errors" describes the packet bus testing facilities of the TN771D and when one must be taken to the customer site.
- Certain catastrophic packet bus failures have an effect on maintenance software activities relating to Packet circuit packs, ports, and endpoints:
  - Packet circuit pack (BRI-BD, PGATE-BD, PDATA-BD, UDS1-BD) in-line errors indicating possible Packet Bus failures are logged in the error log, but are not acted upon.
  - Port-level (BRI-PORT, ABRI-PORT, PGATE-PT, PDATA-PT) in-line errors on Packet circuit packs which indicate possible Packet Bus failures *are not logged or acted upon*.
  - Circuit pack and port in-line errors that are not relevant to the Packet Bus, or that indicate a circuit pack failure, are acted upon in the normal fashion.
  - Periodic and scheduled background maintenance are not affected.
  - Foreground maintenance (for example, a **test board** command executed at a terminal) is not affected.

  The actions in the previous list serve to reduce the system load, which could become excessive if many maintenance objects are affected by a packet bus failure. However, such an excessive load should in no way impede the isolation and the correction of the faults.

  When the above actions are implemented, Error Type 3329 is logged against PKT-BUS, and a Warning alarm is raised. Other Packet Bus errors may raise more severe alarms, thereby overriding the Warning alarm.
- Since all packet traffic requires communication with the Packet Interface, circuit pack in the SPE , a packet bus failure in the Processor Port-Network (PPN) causes packet traffic in the Expansion Port-Networks (EPNs) to fail. Due to this requirement, a PPN packet bus failure must be investigated first whenever packet bus failures occur in multiple port-networks.

Hardware Error Log Entries and Test to Clear Value

PKT-BUS Error Log Entries					
Error Type	**Aux Data**	**Associated Test**	**Alarm Level**	**On/Off Board**	**Test to Clear Value**
0*	0	Any	Any	Any	test pkt port-network
1 (a)	1-2	Packet Circuit Pack Audit Test (#570)	MAJOR	ON	test pkt port-network P l r 2
513 (b)	1-24	Maintenance/Test Circuit Pack Query Test (#572)	MAJOR	ON	test pkt port-network P l r 2
1793 (c)	Any	None			
2049 (d)	1-3	Maintenance/Test Circuit Pack Query Test (#572)	MINOR	ON	test pkt port-network P l r 2
2305 (e)	1-24	Maintenance/Test Circuit Pack Query Test (#572)			test pkt port-network P l
3329 (f)	1-7	none	WARNING	ON	test pkt port-network P l
3585 (g)	Any	none	MINOR	ON	test pkt port-network P l
3841 (h)	Any	none	MINOR	OFF	

* Run the Short Test Sequence first. If all tests pass, run the Long Test Sequence. Refer to the appropriate test description and follow the recommended procedures.

† ON-BOARD indicates a problem with the packet bus itself.

Notes:

a. Within the last minute, packet circuit packs have reported errors that indicate a possible packet bus failure. The Aux Data value is 1 or 2, indicating that only one or more than one Packet circuit pack (respectively) have reported a possible packet bus failure.

b. The Maintenance/Test packet bus port (M/T-PKT) for this port-network has determined that there are more packet bus faults than the port can correct. The Aux Data value indicates the number of faulty leads.

c. Packet circuit packs have detected possible packet bus failures via in-line error or via background test failure. Examine the Error and Alarm logs for more specific PKT-BUS errors.

d. The Maintenance/Test packet bus port (M/T-PKT) has detected a Packet Bus fault and taken corrective action by swapping to spare leads. This error appears only in Critical Reliability systems (duplicated SPEs and PNC). The Aux Data value indicates the number of faulty leads. If this is the only active error against the packet bus, *the packet bus is still in service*. Due to the disruptive nature of the packet bus Fault Isolation and Correction procedures, repairs should be deferred until a time when the least interruption in service will result. This should be determined by consultation with the customer. However, do not delay repairs for too long, since the switch will not be able to recover from another packet bus failure until the existing one is resolved. *Packet Bus Fault Isolation and Correction* in Chapter 5, "Responding to Alarms and Errors" contains a sub-section, *A Special Precaution Concerning the TN771D* that describes how to ensure that the TN771D is providing correct information. A new TN771D may need to be taken to the customer site.

e. The Maintenance/Test packet bus port (M/T-PKT) has detected open leads on the packet bus. The Aux Data value indicates the number of open leads.

f. Packet circuit pack, port, and endpoint maintenance has been disabled due to a packet bus failure. The Aux Data value indicates the cause:

Aux Data	Cause
1	In-line errors from packet circuit packs
2	Uncorrectable packet bus fault reported by the Maintenance/Test packet bus port (M/T-PKT)
3	Both of the above
100*x*	Packet-related circuit pack, port, and endpoint maintenance in the EPN has been disabled due to a packet bus failure in the PPN. The last digit has the same meaning as the single digits listed above.

Keep in mind that although only packet circuit packs can detect and report packet bus problems, such problems can be caused by any circuit pack.

g. Packet circuit pack, port, and endpoint maintenance has been disabled due to more than one circuit pack reporting in-line errors. If this occurs more than three times in 15 minutes a Minor alarm is raised against the packet bus. This happens when maintenance is disabled due to errors and is then re-enabled because no more errors are reported.

This error may still be present in the error log even though the Packet Circuit Pack Audit Test (#573) indicates that only one circuit pack is reporting a problem. This happens when more than one circuit pack has reported errors in any one-minute interval since the packet bus fault occurred.

h. The Maintenance/Test packet bus port (M/T-PKT) for this port-network is not in service. This alarm does not appear for EPNs in Standard or High Reliability systems since a TN771 is not required there. The error indicates one or more of the following:

- The packet bus port has been busied out (indicated by Error Type 18), and a Warning alarm is active against M/T-PKT in the same port-network. Release the port by entering **release port UUCSS04**.
- The packet bus port has failed. Look for alarms against M/T-PKT, and attempt to resolve these alarms.
- The Maintenance/Test circuit pack was not recognized by the system at the last system restart. Replace the Maintenance/Test circuit pack.
- There is no Maintenance/Test circuit pack in this port-network. One must be installed.

The TN711 must be installed before other packet bus alarms can be resolved. (Alarms against a given maintenance object are not resolved until all alarm-generating conditions have been cleared).

System Technician-Demanded Tests: Descriptions and Error Codes

Always investigate tests in the order presented in the following tables when you are investigating errors in the system. By clearing error codes associated with the *Packet Circuit Pack Audit Test,* for example, you may also clear errors generated from other tests in the testing sequence.

Order of Investigation	Short Test Sequence	Long Test Sequence	D/ND*
Packet Circuit Pack Audit Test (#573)	X	X	ND
Maintenance/Test Circuit Pack Query Test (#572)	X	X	ND

Maintenance/Test Circuit Pack Query Test (#572)

This test queries the Maintenance/Test packet bus port about the state of health of the packet bus. If the Maintenance/Test circuit pack indicates that the packet bus has faults, the test fails. The corresponding failure code describes the severity, type, and number of faults. The test passes if the packet bus is fault-free.

NOTE:
A Maintenance/Test circuit pack is usually not present in any EPN of a system without duplicated PNC (Critical Reliability). Customers may optionally install a Maintenance/Test circuit pack in order to make use of itsanalog trunk and digital line test capabilities, and to enhance the system's analog trunk and digital line test capabilities, system's ability to quickly recognize a packet bus failure.

Table 9-284. Test #572 Maintenance/Test Circuit Pack Query Test

Error Code	Test Result	Description/ Recommendation
1006	ABORT	The packet bus port of the Maintenance/Test circuit pack is out of service. 1. Determine if the port is busied out. If so, release it with the **release port UUCSS04** command. Then retry the test command. 2. If there are alarms active against the packet bus port (MT-PKT), refer to M/T-PKT Maintenance documentation to resolve them. Then retry the test command.
1142	ABORT	No Maintenance/Test circuit pack packet bus port is in service in this port-network. 1. If this port-network is required by configuration guidelines to have a Maintenance/Test circuit pack (i.e., it is either a PPN or else an EPN in a system having both SPE and PNC duplication) either a. the Maintenance/Test circuit pack for this port-network has failed, and should be replaced, b. the Maintenance/Test circuit pack has been busied out, and should be released, or c. there is no Maintenance/Test circuit pack in this port-network, and one must be installed. 2. In an EPN of a system without both SPE and PNC duplication, the Maintenance/Test packet bus Port is not required and may not be present. If it is present, and is busied out, or has failed, release or replace the circuit pack. If there is no Maintenance/Test circuit pack, ignore the results of this test for this port-network.

Continued on next page

Table 9-284. Test #572 Maintenance/Test Circuit Pack Query Test — *Continued*

Error Code	Test Result	Description/ Recommendation
2000	ABORT	The test timed-out while waiting for an uplink CCMS response from the Maintenance/Test packet bus port. 1. Re-enter the command at 1-minute intervals a maximum of 5 times. 2. If the test continues to abort, check for problems with the Maintenance/Test packet bus port (look for M/T-PKT in the Error and Alarm Logs). 3. If there is no problem with the Maintenance/Test packet bus port, escalate the problem.
2059	ABORT	The Maintenance/Test packet bus port has reported a hardware failure. 1. Refer to M/T-PKT Maintenance documentation to correct the problem. 2. Re-enter the test command. 3. If the test continues to abort with this code, escalate the problem.
2077	ABORT	The Maintenance/Test Circuit Pack Query located more than one Maintenance/Test packet bus port in the port-network. **NOTE:** The software should not allow this to occur. This is an internal system error. Escalate the problem, but also attempt the following work-around steps. 1. Remove all Maintenance/Test circuit packs from the port-network. 2. Insert one Maintenance/Test circuit pack (there should not be more than one in a port-network). 3. Re-enter the test command.
2100	ABORT	Maintenance could not allocate all of the necessary system resources to perform this test.

Continued on next page

Table 9-284. Test #572 Maintenance/Test Circuit Pack Query Test — *Continued*

Error Code	Test Result	Description/ Recommendation
2500	ABORT	An internal operation failed; the test could not be completed. 1. Re-enter the command at 1-minute intervals a maximum of 5 times. 2. If the test continues to abort, escalate the problem.
	FAIL	The Maintenance/Test packet bus port has detected faults on the Packet Bus. The error codes are interpreted as follows:
1*xxx*		The Maintenance/Test packet bus port has reconfigured the packet bus around the faulty leads. This action only occurs in Critical Reliability systems (duplicated SPE and PNC).
2*xxx*		The Maintenance/Test packet bus port is unable to correct all of the Packet Bus faults it has detected.
x**0***xx*		None of the packet bus faults are open faults.
x**1***xx*		At least some of the packet bus faults are open faults. Look for error type 2305 in the Error Log. The Aux Data value indicates the number of open leads.
xxyy		The last two digits of the error code indicate the total number of faulty packet bus leads detected. Examples: Error Code 2003 FAIL: The Maintenance/Test packet bus port has detected 3 faulty leads. None of them are opens. At least one was unable to be corrected. Error Code 1103 FAIL: The Maintenance/Test Packet Port has detected 3 faulty leads. At least one is an open. The Maintenance/Test circuit pack was able to correct all of them by reconfiguring. 1. Refer to the *Packet Bus Fault Isolation Flowchart* in the *Packet Bus Fault Isolation and Correction* section of Chapter 5, "Responding to Alarms and Errors".
	PASS	No faults have been detected on the packet bus by the Maintenance/Test circuit pack. This is an indication that the packet bus is operating correctly.

Packet Circuit Pack Audit Test (#573)

This test determines whether Packet circuit packs have reported Packet Bus-related in-line errors within the last minute. If so, the failure code indicates whether one or more than one circuit pack has reported such failures.

If the test has failed within the last 5 minutes, there is a 15 second delay before the result is returned. This prevents a repeated sequence of this test from always reporting the same result. If the test passes and a FAIL has not occurred within the last five minutes, a PASS is returned immediately.

Table 9-285. Test #573 Packet Circuit Pack Audit Test

Error Code	Test Result	Description/ Recommendation
2500	ABORT	An internal operation failed; the test could not be repeated. 1. Re-enter the command at one-minute intervals a maximum of five times. 2. If the test continues to abort, escalate the problem.
1	FAIL	One Packet circuit pack has reported packet bus-related in-line errors within the last minute.
2	FAIL	More than one Packet circuit pack has reported packet bus-related in-line errors within the last minute.
	PASS	No Packet circuit packs have reported packet bus-related in-line errors within the last minute. This indicates that the packet bus is healthy, or that a packet bus fault is transient or is being caused by a faulty Packet circuit pack. If this test passes, but there are other signs of a packet bus failure (for example, logged errors or alarms, or other test failures) refer to the *Packet Bus Fault Isolation Flowchart* in *Packet Bus Fault Isolation and Correction* in Chapter 5, "Responding to Alarms and Errors".

PKT-INT (Packet Interface Circuit Pack)

MO Name As It Appears in Alarm Log	Alarm Level	Initial System Technician Command to Run (a)	Full Name of MO
PKT-INT	MAJOR(b)	reset packet-interface CS	Packet Interface Circuit Pack
PKT-INT	MINOR	test packet-interface CS l	Packet Interface Circuit Pack
PKT-INT	WARNING	test packet-interface CS l	Packet Interface Circuit Pack

a. C is the carrier location (a or b), S is the position number of the Packet Interface circuit pack (1, 2, or 3). The carrier location is required only for duplicated SPEs.

b. If a spontaneous interchange has occurred (as indicated by STBY-SPE error type 103 or the **display initcauses** screen), and handshake is down, (check with **status spe**), replace the alarmed circuit pack on the standby SPE. If handshake is up, execute a **test long clear** of the alarmed circuit pack and follow recommended procedures.

The Packet Interface (PKT-INT) circuit pack (TN1655) serves as an interface between the Switch Processing Element (SPE) and the Packet bus in the Processor Port Network (see Figure 9-88 on page P-152).

The PKT-INT supports links used for call setup of all ports located in Expansion Port Networks (EPNs). Therefore, if the PBX system is equipped with the Standard Reliability configuration (without duplicated SPEs), a failure of the Packet Interface circuit pack will prevent call origination and tear-down from telephones and trunks connected to EPNs. In addition to affecting telephone service, a failure of the Packet Interface circuit pack will affect service provided by the following circuit packs that connect to the Packet bus:

- TN464C Universal DS1 circuit pack — ISDN PRI service
- TN553 Packet Data Line circuit pack — System Port feature used for connectivity to features such as Call Detail Recording and dial-up administration.
- TN556 ISDN-BRI Line circuit pack — ISDN BRI service
- TN577 Packet Gateway circuit pack — BX.25 links used for services requiring BX.25 links such as AUDIX and Distributed Communications Systems

If the PBX system is equipped with the High Reliability or Critical Reliability option (i.e. with duplicated SPEs), and if a failure of the Packet Interface circuit pack on the active SPE causes a MAJOR alarm, a SPE interchange will occur if the state of health of the standby SPE is high enough to permit an interchange. A MAJOR

alarm caused by a failure of a Packet Interface circuit pack on the standby SPE will drop the state of health of the standby SPE which prevents any attempt to interchange SPEs.

The links that pass through the Packet Interface circuit pack are identified as application links and system links as follows:

1. Application links
   a. EIA endpoints requiring connectivity to the SPE.

      These links pass over the Packet bus, through the System Ports, and over the TDM bus to provide connectivity from the SPE to endpoints on the TDM bus (see Figure 9-88 on the next page).

      The following system features use application links of this type.

      - Call Detail Recording (CDR)
      - Dial-up administration
      - Property Management System (PMS)
      - Journal printer
      - Wake-up log printer
      - Announcement circuit pack upload/download of recorded messages

   b. BX.25 links supported by the Packet Gateway.

      The following system features use application links of this type.

      - Distributed Communication System (DCS)
      - Audio Information Exchange (AUDIX)
      - Messaging Service Adjunct (MSA)
      - Call Management System (CMS)
      - Outgoing Call Management (OCM)
      - Adjunct Switch Application Interface (ASAI)
2. System links
   - Expansion Archangel links (signaling links for call setup of endpoints in an EPN)
   - Center Stage Control Network (CSCN) links
   - ISDN PRI D channel signaling links
   - Packet Gateway call control links (signaling links to the Packet Gateway circuit pack)
   - ISDN BRI D channel broadcast and point-to-point signaling links
   - Adjunct Switch Application Interface (ASAI) links

The PBX has been designed for a maximum of three Packet Interface circuit packs but only one Packet Interface circuit pack is required for the current PBX hardware configuration. The Packet Interface circuit pack will normally be inserted in the first Packet Interface slot provided in the control carrier although it will operate in any one of the three slots provided. If more than one Packet Interface circuit pack is inserted, an alarm will be generated. For a system equipped with duplicated SPEs, the slot used for the Packet Interface circuit pack on the standby SPE must be the same slot position as that used on the active SPE or an alarm will be generated against the Packet Interface circuit pack in the standby SPE.

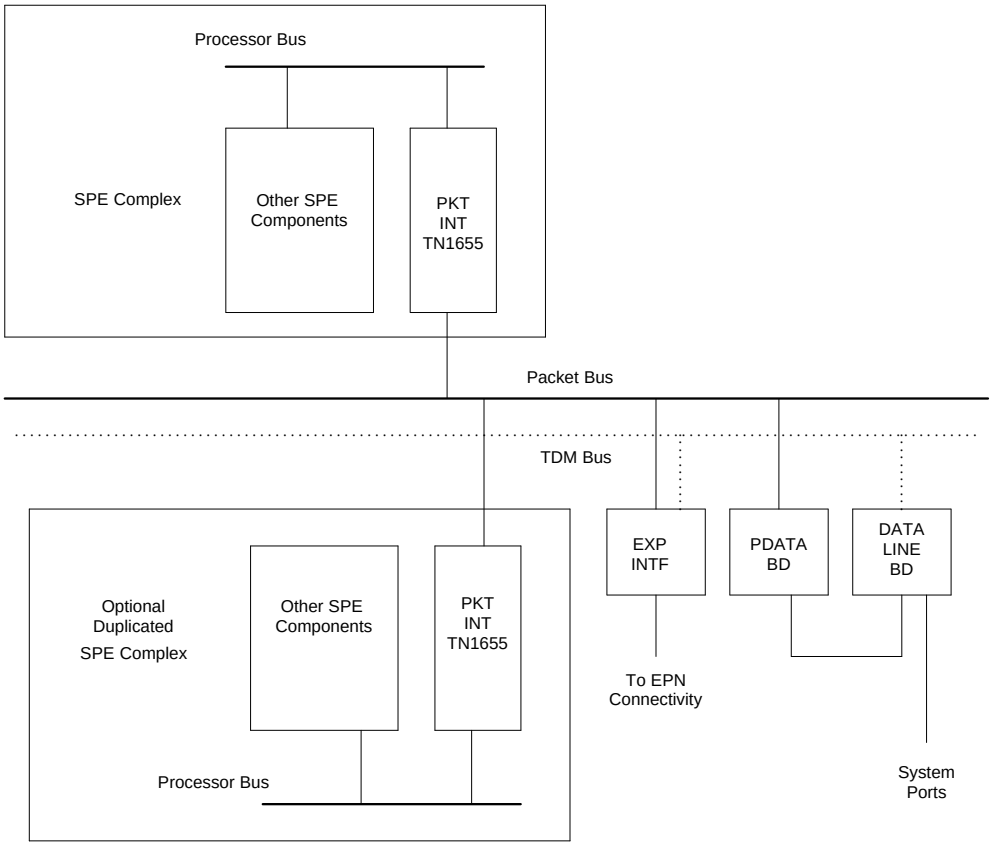

Figure 9-88. Packet Interface Connectivity

Packet Interface Service Operations

The following sections provides more background information about Packet Interface service operations.

Administration

There are no **add** or **remove** commands associated with the Packet Interface circuit packs. Instead, Packet Interface fields (*Packet Intf1, Packet Intf2, Packet Intf3*) that appear under the SPE Optional Boards category on the second page of the System Parameters Maintenance Form are provided to indicate whether the Packet Interface circuit pack is administered.

If a Packet Interface circuit pack is physically present, the corresponding Packet Interface field is set to ‘‘y’’ when the system boots, and no change to that field is allowed. (If the system is equipped with duplicated SPEs, a Packet Interface field is set to ‘‘y’’ when either SPE carrier contains a Packet Interface circuit pack in the corresponding position.) If a Packet Interface circuit pack is not present, then the value for the Packet Interface field is read from translation data stored on disk or tape. If the field is set to ‘‘n,’’ a Packet Interface circuit pack may be administered by changing the corresponding Packet Interface field to ‘‘y.’’

Packet Interface Circuit Pack Replacement

When replacing a Packet Interface circuit pack, follow the procedure used for replacing any circuit pack in the SPE carrier. The SPE carrier must be powered down before a Packet Interface circuit pack is removed or added and then the SPE carrier must be powered back up after the circuit pack is inserted.

Packet Interface circuit packs should not be plugged in or removed from a running system since configuration tables in software need to be updated at system restart time. This is also true for Packet Interface circuit packs in the standby SPE carrier when the system is equipped with duplicated SPEs. Refer to *Replacing SPE Circuit Packs* in Chapter 5, "Responding to Alarms and Errors" for more information on the procedures for replacing circuit packs in a standby SPE carrier.

Demand Reset of a Packet Interface Board

A demand reset of a Packet Interface circuit pack on an active SPE via the entry of a **reset packet-interface** command will be denied by system software if the Packet Interface is in service (has not been placed in an out-of-service state by background maintenance software). Otherwise, a reset of an in-service Packet Interface circuit pack would cause severe service disruption including the loss of all existing calls and dropped links to adjuncts such as AUDIX. The software that controls Packet Interface maintenance puts a Packet Interface circuit pack in the out-of-service state if that circuit pack has been reset three times within the last 15 minutes. as part of the automatic recovery action that is initiated when a hardware fatal fault condition is detected.

A demand reset of a Packet Interface circuit pack on the standby SPE is not disruptive and is allowed regardless of the service state of the associated maintenance software. When a standby Packet Interface circuit pack is reset, memory shadowing is turned off and then back on. A memory refresh is then performed to update the state of the standby Packet Interface circuit pack and to refresh the standby's memory. It takes several minutes after a Packet Interface circuit pack on the standby SPE is reset before memory refresh of the standby SPE is complete. During that time, demand tests of the standby Packet Interface circuit will abort.

Service States

Packet Interface maintenance software maintains a state variable that keeps track of the in-service/out-of-service state of each Packet Interface circuit pack. In a system equipped with a single SPE, if maintenance software detects that a Packet Interface circuit pack has a ''fatal fault'', it will automatically attempt to reset that circuit pack as quickly as possible. An extensive set of diagnostic tests are run when the circuit pack is reset.

If the circuit pack diagnostic tests do not pass in a system without duplicated SPEs, the failing Packet Interface circuit pack is placed in an out-of-service state. All links handled by that circuit pack will go out of service. This is a disruptive action since established calls associated with telephones connected to Expansion Port Networks are dropped as a result of the EPNs being taken out of service.

If the system is equipped with duplicated SPEs and if the standby SPE has an acceptable state-of-health, an SPE interchange will occur instead of a reset of the Packet Interface circuit pack. This is less disruptive than a reset since stable calls are not disconnected.

A Packet Interface circuit pack will also be put in the ''out-of-service'' state if the circuit pack has reported a fatal fault at system initialization time or if the circuit pack has been reset by background maintenance three times within the last 15 minutes, whether or not the Reset test passes. The state of a Packet Interface circuit pack can be determined by using the **status packet-interface** command.

Duplication Impact

The Packet Interface circuit pack is a single point of failure in a system that is not equipped with duplicated SPEs. If this is not acceptable, customers have the option of upgrading to a configuration with a duplicated SPE processor complex as part of the High Reliability or Critical Reliability Configuration. Figure 9-88 on page P-152 shows the configuration with duplicated processors. The following concepts apply only when the processors are duplicated.

- Configuration Mismatch

  The number and position of Packet Interface circuit packs on the standby SPE must match exactly the number and position of Packet Interface circuit packs on the active SPE. If this is not the case, a MAJOR alarm is

raised against a missing Packet Interface circuit pack on the standby SPE and a WARNING alarm is raised against extra Packet Interface circuit packs on the standby SPE.

The system is provided with 3 slots for a maximum of 3 Packet Interface circuit packs. Only one Packet Interface circuit pack is required. This circuit pack is typically plugged into the first slot but it may be plugged into any of three slots. A WARNING alarm will be raised if more than one Packet Interface circuit pack is present in an SPE carrier.

The version of firmware on a standby Packet Interface circuit pack must also match the version of firmware on the corresponding active Packet Interface circuit pack. If this is not the case, the standby Packet Interface circuit pack enters a fatal fault state and the standby Packet Interface circuit pack maintenance software sets its corresponding in-service/out-of-service state to out-of-service.

The configuration checks are only made if the active SPE can communicate with the standby SPE. If the standby SPE is locked off-line by setting the SPE-SELECT switches on the DUPINT circuit packs to the position of the active SPE, the mismatch test is not run and therefore, the mismatch is not detected.

- Packet Bus Connection

  In a system equipped with duplicated SPEs, the Packet Interface circuit packs in the Standby SPE can not access the Packet Bus to write data except during the time of a planned SPE interchange and when the Peer Link Test (#888) is run. Consequently, the Maintenance Looparound Test (#886) that requires access to the Packet Bus is not run on Packet Interface circuit packs on the Standby SPE.

- SPE Interchange

  Severe Packet Interface circuit pack faults which cause system and application links to go down will be detected within 1 second. A fatal fault error message will be generated and the Packet Interface maintenance software will attempt to run the Packet Interface Reset test. In systems equipped with the High Reliability or Critical Reliability Configuration this will result in a request for an SPE interchange instead of a reset of the Packet Interface circuit pack since stable calls are preserved across an SPE interchange.

- Clearing Alarms on Standby Packet Interface Circuit Packs

  Alarms for Packet Interface circuit packs on the standby SPE are not cleared automatically when handshake communication with the standby SPE goes down. Handshake communication will go down when the standby SPE is powered down (as part of the repair procedures) or when the SPE-SELECT switches on the DUPINT circuit packs are set to the position of the active SPE. Packet Interface alarms remain after an SPE interchange. This means that memory shadowing will not turn on after an SPE interchange if a Packet Interface circuit pack on the standby SPE had

a Major alarm before the interchange. If the Packet Interface circuit pack is replaced, the alarm will still be present. A demand reset of the standby PKT-INT is required to clear the alarm.

Maintenance Object Interactions

- Packet Bus Maintenance

  The Packet Interface circuit pack physically interacts with the PKT-BUS (Packet Bus). For certain types of Packet Interface circuit pack errors, it may be difficult to isolate the fault to one of these two components. In these cases, Packet Interface maintenance will forward the error report to the Packet Bus maintenance, thus causing Packet Bus maintenance to record a Packet Bus fault in the hardware error log and to run appropriate Packet Bus tests.

- Packet Circuit Pack Maintenance

  The operation of the Packet Interface circuit pack affects the operation and maintenance of other circuit packs connected to the Packet bus. This includes:

  1. Expansion Interface circuit pack maintenance (EXP-INTF)
  2. Packet Data Line as part of the System Port (PDATA-BD)

     A System Port is used for connectivity to endpoints connected to the TDM bus such as CDR and dial-up G3-MTs.
  3. BRI applications (BRI-PT)
  4. Packet Gateway applications (PGATE) for X.25 interfaces
  5. Universal DS1 applications (UDS1) for ISDN/PRI applications

  Some errors of Packet Circuit Packs may require examination of the Packet Interface operating status. To obtain this information, examine the Error and Alarm Logs for PKT-INT entries. Also issue the **status packet-interface** command to determine the service state of the Packet Interface circuit packs (e.g., in-service/out-of-service) and information about the total number of Packet Interface links assigned to a Packet Interface circuit pack. For a Packet Interface circuit pack in the standby SPE in a system equipped with duplicated SPEs, a Packet Interface is shown to be a ‘‘standby’’ mode if it is not out of service due to a failure condition. The number of links for a standby Packet Interface is always zero.

  In general, if all links for a Packet Interface circuit pack on an Active SPE are shown in the ‘‘Failed Links’’ category, there may be a fault on the Packet Interface circuit pack or on the Packet Bus that caused all links to go down. If only a small percentage of the links are shown as ‘‘Failed Links,’’ then the Packet Interface circuit pack is probably not the source of the problem. Examples of the source of individual link failures include the failure of a BRI telephone set, a disconnect of the cord to a BRI set, and a failure or removal of an Expansion Interface circuit pack in an Expansion

Port Network, The disconnect of a BRI set causes three link failures and the removal of a EI board in an EPN causes one link failure. Refer to Chapter 8, "Maintenance Commands", for more information on the **status packet-interface** command.

For the case where not all links are in the ‘‘Failed Links’’ category, examine the alarm log and error log for failures of the following circuit pack types and follow the repair procedures for those circuit packs before considering replacing the associated Packet Interface circuit pack:

- Expansion Interface circuit pack (EXP-INTF)
- Switch Node Interface circuit pack (SNI-BD)
- Switch Node Clock circuit pack (SNC-BD)
- Packet Data Line circuit packs and ports (PDATA-BD, PDATA-PT)
- ISDN-BRI Line circuit packs, ports, and stations (BRI-BD, BRI-PORT, BRI-SET)
- Packet Gateway circuit packs and ports (PGATE-BD, PGATE-PT)
- Universal DS1 circuit packs and ports (UDS1-BD, TIE-DS1)

Error Log Entries and Test to Clear Values

Table 9-286. Packet Interface Error Log Entries

Error Type	Aux Data	Associated Test	Alarm Level	On/Off Board	Test to Clear Value
0*	0	Any	Any	ON	test packet-interface CS l r 2
1 (a)	Any	None	MAJOR†	ON	reset packet-interface CS ‡
10 (b)	0	None			
23 (c)	0	None	MAJOR†	OFF	
23 (d)	0	None	MINOR	OFF	
50 (e)	0	None			
100 (f)	0	None			
150 (g)	0	None	MAJOR	ON	test packet-interface CN l c
200 (h)	0	None	MAJOR†	OFF	
217 (j)	0	None	WARNING	OFF	
257 (i)	Any	None	MAJOR†	ON	reset packet-interface CS ‡
267 (j)	0	None	WARNING	OFF	
513 (k)	Any	None	MAJOR†	ON	reset packet-interface CS ‡
769 (l)	Any	Maintenance Looparound Test (#886)	MAJOR†	ON	test packet-interface CS s r 2
1025, (m)	Any	Private Looparound Test (#885)	MAJOR†	ON	reset packet-interface CS ‡
1026	Any	None	MAJOR†	ON	reset packet-interface CS ‡
1281 (n)	Any	None	MAJOR†	ON	reset packet-interface CS ‡
1537 (o)	Any	Memory Checksum Test (884)	MINOR	ON	test packet-interface CS l r 2

Continued on next page

Table 9-286. Packet Interface Error Log Entries — *Continued*

Error Type	Aux Data	Associated Test	Alarm Level	On/Off Board	Test to Clear Value
1793 (p)	Any	Memory Checksum Test (#884)	MINOR	ON	test packet-interface CS l r 2
2049 (q)	Any	None	WARNING	ON	test packet-interface CS r 25
2305 (r)	Any	None			test packet-interface CS r 2
2561 (s)	Any	Active-Standby Peer Link Test (#888)	MINOR	OFF	test packet-interface CS s r 2
2817 (u)	Any	Read and Clear Test (#887)	MINOR/ MAJOR†	ON	test packet-interface CS s
3074, 3073, 3072 (t)	Any	Maintenance Looparound Test (#886)	WARNING	OFF	test packet-interface CS s r 2
3329 (v)	Any	None	WARNING	OFF	reset packet-interface CS ‡
3585 (w)	Any	None	WARNING	OFF	reset packet-interface CS ‡
3841 (x)	Any	None	MAJOR†	OFF	reset packet-interface CS ‡

* Indicates that an alarm was raised but an associated error was not entered into the hardware error log due to a momentary overload condition caused by a burst of hardware or software error reports. Run the long test sequence. Refer to the appropriate test descriptions for any failures and follow the recommended procedures.

† If a spontaneous interchange has occurred (as indicated by STBY-SPE error type 103 or the **display initcauses** screen), and handshake is down, (check with **status spe**), replace the alarmed circuit pack on the standby SPE. If handshake is up, execute a **test long clear** of the alarmed circuit pack and follow recommended procedures.

‡ A Packet Interface circuit pack on an active SPE can only be reset if it has been taken out of service by background maintenance software. A Packet Interface circuit pack on a standby SPE can be reset independent of its service state.

Notes:

a. Error 1 occurs when background maintenance software has reset the Packet Interface circuit pack as a fault recovery action. It is used to keep track of the number of times that the Packet Interface circuit pack is reset, independent of whether or not the Reset test passed. Once three of these errors have occurred in the last 15 minutes, maintenance will place the Packet Interface circuit pack into an out-of-service state, and a MAJOR on-board alarm will be raised on the Packet Interface circuit pack.

   1. Check to see if error codes 257, 513, 769, 1025, 1281, or 3841 are present in the hardware error log. If one or more of those error codes are present, refer to the information associated with those errors for the appropriate repair procedures.

   2. If no other Packet Interface errors appear in the error log, and if the Packet Interface circuit pack is not in a held reset state as indicated by the absence of a MAJOR alarm with a Service State of OUT, no action should be taken. If a Packet Interface MAJOR alarm is present and no other Packet Interface error codes are in the hardware error log, execute a demand reset by entering **reset packet-interface CS** and refer to the repair procedures for Test # 889.

b. Error 10 indicates that the Packet Interface maintenance software caused an escalating system WARM restart as part of a recovery action for certain Packet Interface circuit pack failures. A SYSTEM error type 10 should also be present, indicating that a software initiated WARM restart occurred.

   1. Check to see if error types 513, 1025, or 3074 are present in the hardware error log. If they are present, refer to the repair procedures for those errors for further action.

   2. If the error types mentioned above are not present, follow normal escalation procedures.

c. Error 23 along with an associated MAJOR alarm indicates that (a) Packet Interface circuit pack translation data was loaded from the tape or disk at boot time but the Packet Interface circuit pack was not detected to be physically present or (b) a Packet Interface circuit pack is on the active SPE but a corresponding Packet Interface circuit pack on the standby SPE is missing.

   1. If the Packet Interface circuit pack is physically present, replace the circuit pack. The SPE must be rebooted to resolve the alarm.
   2. Otherwise, insert the missing Packet Interface circuit pack into the system or use the **change system-parameters maintenance** command to change the entries for Packet Interface circuit packs to match the circuit packs actually present. If a Packet Interface circuit is added to the system, the SPE must be rebooted to resolve the alarm.

d. Error 23 along with an associated MINOR alarm occurs when a user logically administers a Packet Interface circuit pack using the **change system-parameters maintenance** command when the Packet Interface circuit pack is not physically present.

   1. Use the **display system-parameters maintenance** command to determine the number of Packet Interface circuit packs logically or physically present.
   2. Insert the missing Packet Interface circuit pack into the system or use the **change system-parameters maintenance** command to change the entries for Packet Interface circuit packs to match those actually present.

e. Error 50 indicates that the SPE is sending more downlink messages than the Packet Interface can keep up with. This is an in-line error not produced by any test. When this error is reported, application software is slowed down to allow the Packet Interface to process existing downlink messages. If there is a hardware problem, the Packet Interface test will normally cause other errors to be logged. In the rare case where there are no other PKT-INT errors logged but error 50 occurs more than 10 times in the last hour, follow normal escalation procedures.

f. Error 100 indicates that the SPE requested a reset of Packet Interface circuit packs on the active SPE as part of a Packet Interface circuit pack recovery action. In a High Reliability or Critical Reliability system, an SPE interchange will occur instead of a Packet Interface circuit pack reset, if the health of the standby SPE allows an interchange.

   1. If no other PKT-INT errors except error code 1 are present, this means that that the Packet Interface circuit pack was in a fatal fault state at the time of system initialization or SPE interchange and it was reset successfully. No other actions are required.
   2. If PKT-INT error codes other than error code 1 are present, refer to the repair procedures for those errors to correct the failure.

g. Error 150 indicates that a SPE interchange occurred and that the Packet Interface circuit pack was the cause of the spontaneous interchange.

   1. If other PKT-INT errors are present, investigate those errors.
   2. If no other PKT-INT errors are present, run the **test packet-interface long clear** command and investigate any failures.
   3. If all tests pass, follow normal escalation procedures.

h. Error 200 indicates that memory shadowing was turned off in preparation for resetting a Packet Interface circuit pack on the active SPE in a system with the High Reliability or Critical Reliability Configuration. No action should be taken based on this error code. Normally, when the state of health of the standby SPE allows an SPE interchange, an SPE interchange will be requested instead of a Packet Interface reset. However, if the state of health of the standby SPE does not permit an SPE interchange, the Packet Interface circuit pack on the active SPE will be reset. As part of that reset action, memory shadowing is turned off so that the Packet Interface circuit pack on the standby SPE will be refreshed after the active Packet Interface circuit pack is reset.

i. Error 257 indicates that the circuit pack detected a fatal failure. This error is a very serious and when it occurs, maintenance software immediately escalates testing to the destructive reset test (#889).

   1. If the Packet Interface circuit has a MAJOR alarm:
      a. Reset the Packet Interface circuit pack using the **reset packet-interface CS** command.
      b. Refer to the repair procedures for the Packet Interface Reset Test (#889).
   2. If the Packet Interface circuit pack is not alarmed, no action is required.

j. Errors 267 and 217 indicate that the number of Packet Interface circuit packs detected as being physically present exceeds number of Packet Interface circuit packs supported by the software configuration or, if the SPEs are duplicated, that a Packet Interface circuit pack is detected as being physically present on the standby SPE but the corresponding Packet Interface circuit pack on the active SPE is not present.

   1. If more than one Packet Interface circuit pack is inserted in the active or standby SPE carrier, remove the extra circuit pack(s).
   2. If the SPE is duplicated, visually check that the number and location of Packet Interface circuit packs in the standby SPE carrier match the number and location of Packet Interface circuit packs in the active SPE carrier. If there is a mismatch, insert Packet Interface circuit packs in the standby SPE to match the Packet Interface circuit packs in the active SPE.

k. Error 513 is called Message Handshake failure. It indicates that a failure with the message protocol between the SPE software and the Packet Interface circuit pack was detected.

   1. If the Packet Interface circuit has a MAJOR alarm:

      a. Reset the Packet Interface circuit pack using the **reset packet-interface CS** command.

      b. Refer to the repair procedures for the *Packet Interface Reset Test (#889)*.

   2. If the Packet Interface circuit pack is not alarmed, no action is required.

l. Error 769 indicates that there was a failure in the *Packet Looparound test*. A maintenance looparound link cannot be established or the Packet Interface circuit pack cannot send and receive data correctly as part of the looparound test (Test #886). If the number of errors exceeds a defined threshold, a Major alarm will be raised.

   In a system equipped with duplicated SPEs, a failure of the Maintenance Looparound test may have caused an SPE interchange which would result in an alarm associated with error code 769 being reported against a Packet Interface circuit pack that is currently on the standby SPE. If that is the case it may be necessary to force the standby SPE to go active by using the SPE-SELECT switches on the DUPINT circuit packs in order to run the Maintenance Loop Around test to make sure the problem has been cleared.

   For more information, refer to the repair procedures of Test #886.

m. Error 1025 indicates a failure of the private Level 3 looparound test (Test # 885).

   1. If the Packet Interface circuit has a MAJOR alarm:

      a. Reset the Packet Interface circuit pack using the **reset packet-interface CS** command.

      b. Refer to the repair procedures for the *Packet Interface Reset Test (#889)*.

   2. If the Packet Interface circuit pack is not alarmed, no action is required.

n. Error 1281 indicates that the Packet Interface circuit pack has Translation RAM failures. PKT-INT Translation RAM is used to convert the addresses of a packet to the destination endpoint address.

   1. If the Packet Interface circuit has a MAJOR alarm:

      a. Reset the Packet Interface circuit pack using the **reset packet-interface CS** command.

      b. Refer to the repair procedures for the *Packet Interface Reset Test (#889)*.

2. If the Packet Interface circuit pack is not alarmed, no action is required.

o. Error 1537 indicates a Boot PROM memory failure. The Packet Interface circuit pack may still be operational if no other errors are reported. However the circuit pack may report a fatal fault during board initialization. This may occur during a system recovery level more severe than a WARM restart. For more information, refer to Test #884.

p. Error 1793 indicates a FLASH Memory test failure. The Packet Interface circuit pack may still be operational if no other errors are reported. However the circuit pack may report a fatal fault during board initialization. This may occur during a system recovery level more severe than a WARM restart. For more information, refer to the repair procedures of Test #884.

q. Error 2049 indicates a LAPD Received Buffer Overflow error. The Packet Interface circuit pack Packet bus receive buffer overflowed. For more information, refer to the repair procedures of Test #887.

r. Error 2305 indicates a Packet Bus Interface Detected Parity failure. The Packet Interface circuit pack received packets with parity error from the Packet bus.

   1. Check for errors logged against the Packet bus and Maintenance/Test circuit pack. Refer to the appropriate repair procedures to clear those errors first.

   2. Check all other circuit packs connected to the Packet bus in the same cabinet. Packet Bus failures are likely to be caused by a faulty circuit pack connected to the backplane or bent pins on the back plane.

   3. If steps 1 and 2 above do not clear the problem, execute the **test packet-interface** command and follow repair procedures described for Test #887.

s. Error 2561 indicates a Active-Standby Peer Link test failure indicating a possible failure of the Packet Interface circuit pack on the active SPE or a failure of the corresponding Packet Interface circuit pack on the standby SPE. If the number of errors exceeds a defined threshold, a Minor alarm will be raised. For more information, refer to the repair procedures of Test #888.

t. Error 2817 indicates a Standby Packet Interface circuit pack Translation RAM failure. A MINOR alarm is raised when there are 1 to 5 bad locations and a MAJOR alarm is raised when there are 5 or more bad locations. Execute the **test packet-interface** command and follow repair procedures described for Test #887.

u. Errors 3074, 3073, and 3072 indicate PKT-INT Transmit Buffer Overflow, which means that the number of transmit buffers required by software exceeded the number available. A 3074 error is generated when the PKINT sends an in-line hardware error to maintenance software indicating transmit buffer overflow. As part of the background recovery action for this error, maintenance software will automatically run the Maintenance

Looparound test (#886). If that test fails, maintenance software generates error codes 3073 and 3072, and it requests a system WARM restart. If, after the WARM restart, transmit buffer overflow errors continue to be reported, maintenance software generates error code 100 and it resets the PKT-INT. These errors may be the result of system overload due to a problem with communication between the PKT-INT and the EPNs.

1. Check for errors logged against the Expansion Interface circuit pack, the Switch Node Interface circuit pack, Packet Gateway circuit pack, the Packet Data Line circuit packs associated with the System Ports, BRI Line circuit packs and BRI endpoints, and the Universal DS1 circuit packs supporting PRI service. Errors against those components should be cleared first.
2. Enter the **test packet-interface short** command against the Packet Interface circuit pack associated with the error. If the Maintenance Looparound test (#886) test passes, the alarm will clear. If the test fails, repeat the test 5 times. If it continues to fail, follow normal escalation procedures.
3. If the alarm continues to occur, follow normal escalation procedures.

v. Error 3329 indicates that the TDM clock has failed. The Tone Board circuit pack should have been alarmed (TONE-BD, TDM-CLK). Refer to the TDM-CLK and/or TONE-BD maintenance documentation for further action. The Packet Interface circuit is taken out of service when this failure occurs. After the Tone/Clock failure has been corrected, execute the **reset packet-interface** command to bring the Packet Interface circuit back into service.

w. Error 3585 indicates that a Packet bus failure has been detected and that the Packet bus is alarmed. Refer to the Packet Bus maintenance documentation for further action.

x. Error 3841 indicates that the Packet Interface circuit pack has reported a fatal fault failure condition that may be caused by a Packet Bus failure on the Processor Port Network.

1. If error 3585 has also been reported, refer to the maintenance documentation for PKT (Packet Bus) maintenance. After the Packet Bus failure has been corrected, execute the **reset packet-interface** command to bring the Packet Interface circuit back into service.
2. If error 3585 has not been reported, enter the **reset packet-interface** command and follow the repair steps associated with test #889.

System Technician-Demanded Tests: Descriptions and Error Codes

Always investigate tests in the order presented in the table below when inspecting errors in the system. By clearing error codes associated with the *Packet Interface Private Looparound* test for example, you may also clear errors generated from other tests in the testing sequence.

Order of Investigation	Short Test Sequence	Long Test Sequence	Reset Board Sequence	D/ND*
Packet Interface Reset Test (#889)			X	D
Packet Interface Private Looparound Tests (#885)		X		ND
Packet Interface Maintenance Looparound Test (#886) (a)	X	X		ND
Packet Interface Memory Checksum Test (#884)		X		ND
Packet Interface Error Counter Read and Clear Test (#887)	X	X		ND
Packet Interface Active-Standby Peer Link Test (#888) (b)	X	X		ND

* D = Destructive; ND = Nondestructive

Notes:

a. This test is run only on a Packet Interface circuit pack on an active SPE.

b. This test is run only on a Packet Interface circuit pack on a standby SPE.

Memory Checksum Test (#884)

This test involves sending a message to the Packet Interface circuit pack to run private non-destructive memory checksum tests on the firmware text residing in Boot PROM and FLASH memory. If the test fails during background testing, the circuit pack will remain operational until a reset is executed on the circuit pack. Then the initialization firmware will fail and will put the circuit pack in an out-of-service state.

Table 9-287. TEST #884 Memory Checksum Test

Error Code	Test Result	Description/ Recommendation
1006 1137	ABORT	Packet Interface circuit pack is in the out-of-service state so normal maintenance tests will not run on that circuit pack. 1. Request a Packet Interface circuit pack reset using the **reset packet-interface CS** command. Refer to the Packet Interface Reset Test (#889) repair procedures for further action.
1334	ABORT	The Packet Interface circuit pack command queue is full. This should be a temporary condition caused by a high rate of commands being sent to a Packet Interface circuit pack. Continued operation with a full command queue will cause a system WARM restart that may escalate to more severe restart levels. 1. Retry the command at 10 second intervals, a maximum of 5 times. 2. If the test continues to abort, follow normal escalation procedures.
1338	ABORT	The test is not allowed to run since a planned SPE interchange is in progress. A planned interchange may be caused by 24 hour scheduled testing. During this time the terminal will be held out of service but it should recover automatically after three minutes. 1. Wait three minutes and retry the command. 2. If the test continues to abort, follow normal escalation procedures.

Continued on next page

Table 9-287. TEST #884 Memory Checksum Test — *Continued*

Error Code	Test Result	Description/ Recommendation
1339	ABORT	The test could not run on the standby Packet Interface circuit pack because the standby SPE is unavailable. 1. Refer to the STBY-SPE maintenance documentation for information on why a standby SPE may be unavailable and what repair actions should be taken. The **status spe** screen should indicate that handshake is down. This may be caused by a variety of reasons such as the setting the SPE-SELECT switches on the DUPINT circuit packs to the position of the active SPE, a failure of the DUPINT circuit pack, or loss of power on the standby SPE, The *SPE Selected* field on the **status spe** screen will display *spe a* or *spe b* if the SPE-SELECT switches are in the a or b position, respectively.
1347	ABORT	The test could not run because refresh of the standby SPE's memory is not complete. 1. Enter **status spe** and verify that refresh is not complete. Wait until the status screen indicates that refresh is complete and try the command again. The status screen should indicate that shadowing is on. If some event such as a major alarm on a Packet Interface circuit pack on the standby SPE causes shadowing to turn off, refresh cannot complete and abort code 1350 will be returned when **test packet-interface** is entered. 2. If the test continues to abort, follow normal escalation procedures.

Continued on next page

Table 9-287. TEST #884 Memory Checksum Test — *Continued*

Error Code	Test Result	Description/ Recommendation
1350	ABORT	The test could not run because memory shadowing has not started. 1. Enter **status spe** and verify that shadowing has not started. The SPE is locked when the SPE-SELECT switches on the DUPINT circuit pack are set to the position of the active SPE. Return the switches to the neutral position. If the SPE is not locked, verify that there are no alarms active for the standby SPE. If there are, enter "display alarms" and verify that there are no major alarms against the standby Packet Interface circuit packs. If there are, clear those alarms first. 2. If the test continues to abort, follow normal escalation procedures.
2000	ABORT	Response to the test request was not received within the allowable time period. If the system is equipped with the High Reliability or Critical Reliability Configuration and if the Packet Interface circuit pack is on the standby SPE, this abort code may indicate that the standby SPE is not responding to the handshake message. If this is the case, the standby SPE maintenance software may take up to two minutes to indicate that handshake communication with the standby SPE is down. The ABORT code will then change to 1339 (standby SPE unavailable). 1. Retry the command at 1-minute intervals, a maximum of 3 times. 2. If the test continues to abort with this abort code, follow normal escalation procedures.
2500	ABORT	Internal System Error 1. Retry the command. 2. If the test continues to abort, follow normal escalation procedures.

Continued on next page

Table 9-287. TEST #884 Memory Checksum Test — *Continued*

Error Code	Test Result	Description/ Recommendation
	NO_ BOARD	The Packet Interface circuit pack is administered but it is not detected as being physically present. 1. If the Packet Interface circuit pack is present, replace it. 2. If the Packet Interface circuit pack is not physically present, use the **display system-parameters maintenance** command to check if the Packet Interface circuit pack is administered as being present. If it is administered, use the **change system-parameters maintenance** command to change the Packet Interface circuit packs administered to be those actually present. 3. If the test continues to abort, follow normal escalation procedures.

Continued on next page

Table 9-287. TEST #884 Memory Checksum Test — *Continued*

Error Code	Test Result	Description/ Recommendation
1537	FAIL	The Boot PROM memory checksum test failed. The circuit pack may still be operational. 1. Retry the command. 2. If the same error code occurs a. If the system is not equipped with the High Reliability or Critical Reliability Configuration replace the circuit pack at a time that would cause the least disruption of service. The circuit pack is still functional but should be replaced since it may not operate after a system reboot and it will enter a fatal fault state if it is reset for other reasons. b. If the system is equipped with the High Reliability or Critical Reliability Configuration and if the Packet Interface circuit pack is on the standby SPE, replace that circuit pack. c. If the system is equipped with the High Reliability or Critical Reliability Configuration and if the Packet Interface circuit pack is on the active SPE, perform a planned SPE interchange by entering the command **reset system interchange**. Use the **status spe** command to determine when refresh is complete (between 2 to 10 minutes, depending on system size) and retry the test command. If the test of the circuit pack on the standby SPE continues to fail, replace that circuit pack. 3. If the test continues to fail after the circuit pack is replaced, follow normal escalation procedures

Continued on next page

Table 9-287. TEST #884 Memory Checksum Test — *Continued*

Error Code	Test Result	Description/ Recommendation
1793	FAIL	The Flash memory checksum test failed. The circuit pack may still be operational but it will fail if a reset is executed. 1. Retry the command. 2. If the same error code occurs a. If the system is not equipped with the High Reliability or Critical Reliability Configuration replace the circuit pack at a time that would cause the least disruption of service. The circuit pack is still functional but should be replaced since it may not operate after a system reboot and it will enter a fatal fault state if it is reset for other reasons. b. If the system is equipped with the High Reliability or Critical Reliability Configuration and if the Packet Interface circuit pack is on the standby SPE, replace that circuit pack. c. If the system is equipped with the High Reliability or Critical Reliability Configuration and if the Packet Interface circuit pack is on the active SPE, perform a planned SPE interchange by entering the command **reset system interchange**. Use the **status spe** command to determine when refresh is complete (between 2 to 10 minutes, depending on system size) and retry the test command. If the test of the circuit pack on the standby SPE continues to fail, replace that circuit pack. 3. If the test continues to fail after the circuit pack is replaced, follow normal escalation procedures
	PASS	The circuit pack's firmware is in a proper state. If problems are still reported on the circuit pack, check for errors on the Private Looparound test (#885) and Maintenance Looparound Test (#886).

Private Loop Around Tests (#885)

This test requests the Packet Interface circuit pack to execute its three private looparound tests: Level 2 looparound, Broadcast path looparound, and Level 3 looparound. These tests verify the health of the circuit pack's Packet Bus interface, as well as the translation RAM, inward and outward bound data paths, parity indications and CRC calculations, and the Level 3 processing firmware.

- Level 2 (LAPD) Link Looparound

  LAPD is a link level protocol that is used for all system links. This test verifies the health of the processing of these links.

- Broadcast Link Looparound

  Each ISDN BRI port has two associated broadcast signaling links, one for call control and one for maintenance and management. Since these links have separate routing circuitry from the Level 2 Looparound, this test forces a CRC error to verify the CRC hardware associated with the broadcast data path.

- Level 3 Link Looparound

  Level 3 Links support the X.25 Data Phase protocol used with the Packet Gateway to support X.25 links such as those used for AUDIX. This test verifies the health of the Level 3 firmware. Since soft errors are possible, the Packet Interface circuit pack retries the test before reporting an error.

These tests are also run as part of the reset tests. If the Level 2 or Level 3 looparound test fail as background tests, a "fatal error" message will be sent to the Packet Interface maintenance software and the Packet Interface circuit pack will be put in the "out-of-service" state. Therefore, it is expected that the repair procedures associated with Abort Code 1137 (out-of-service) would normally be followed when failures with the Level 2 and Level 3 tests occur.

Table 9-288. TEST #885 Private Loop Around Tests

Error Code	Test Result	Description/ Recommendation
1006 1137	ABORT	Packet Interface circuit pack is in the out-of-service state so normal maintenance tests will not run on that circuit pack. 1. Request a Packet Interface circuit pack reset using the **reset packet-interface CS** command. Refer to the Packet Interface Reset Test (#889) repair procedures for further action.
1334	ABORT	The Packet Interface circuit pack command queue is full. This should be a temporary condition caused by a high rate of commands being sent to a Packet Interface circuit pack. Continued operation with a full command queue will cause a system WARM restart that may escalate to more severe restart levels. 1. Retry the command at 10 second intervals, a maximum of 5 times. 2. If the test continues to abort, follow normal escalation procedures.
1338	ABORT	The test is not allowed to run since a planned SPE interchange is in progress. A planned interchange may be caused by 24 hour scheduled testing. During this time the terminal will be held out of service but it should recover automatically after 3 minutes. 1. Wait 3 minutes and retry the command. 2. If the test continues to abort, follow normal escalation procedures.

Continued on next page

Table 9-288. TEST #885 Private Loop Around Tests — *Continued*

Error Code	Test Result	Description/ Recommendation
1339	ABORT	The test could not run on the standby Packet Interface circuit pack because the standby SPE is unavailable. 1. Refer to the STBY-SPE maintenance documentation for information on why a standby SPE may be unavailable and what repair actions should be taken. The **status spe** screen should indicate that handshake is down. This may be caused by a variety of reasons such as the setting the SPE-SELECT switches on the DUPINT circuit packs to the position of the active SPE, a failure of the DUPINT circuit pack, or loss of power on the standby SPE, The *SPE Selected field* on the **status spe** screen will display *spe a* or *spe b* if the SPE-SELECT switches are in the a or b position, respectively.
1347	ABORT	The test could not run because refresh of the standby SPE's memory is not complete. 1. Enter **status spe** and verify that refresh is not complete. Wait until the status screen indicates that refresh is complete and try the command again. The status screen should indicate that shadowing is on. If some event such as a major alarm on a Packet Interface circuit pack on the standby SPE causes shadowing to turn off, refresh cannot complete and abort code 1350 will be returned when the test packet-interface command is entered. 2. If the test continues to abort, follow normal escalation procedures.

Continued on next page

Table 9-288. TEST #885 Private Loop Around Tests — *Continued*

Error Code	Test Result	Description/ Recommendation
1350	ABORT	The test could not run because memory shadowing has not started. 1. Enter **status spe** and verify that shadowing has not started. The SPE is locked when both SPE-SELECT switches on the two DUPINT circuit packs are set to the position of the active SPE. Return the switches to the neutral position. If the SPE is not locked, verify that there are no alarms active for the standby SPE. If there are, enter "display alarms" and verify that there are no major alarms against the standby Packet Interface circuit packs. If there are, clear those alarms first. 2. If the test continues to abort, follow normal escalation procedures.
2000	ABORT	Response to the test request was not received within the allowable time period. If the system is equipped with the High Reliability or Critical Reliability Configuration and if the Packet Interface circuit pack is on the standby SPE, this abort code may indicate that the standby SPE is not responding to the handshake message. If this is the case, the standby SPE maintenance software may take up to two minutes to indicate that handshake communication with the standby SPE is down. The ABORT code will then change to 1339 (standby SPE unavailable). 1. Retry the command at 1-minute intervals, a maximum of 3 times. 2. If the test continues to abort with this abort code, follow normal escalation procedures.
2500	ABORT	Internal System Error 1. Retry the command. 2. If the test continues to abort, follow normal escalation procedures.

Continued on next page

Table 9-288. TEST #885 Private Loop Around Tests — *Continued*

Error Code	Test Result	Description/ Recommendation
	NO_ BOARD	The Packet Interface circuit pack is administered but it is not detected as being physically present. 1. If the Packet Interface circuit pack is present, replace it. 2. If the Packet Interface circuit pack is not physically present, use the **display system-parameters maintenance** command to check if the Packet Interface circuit pack is administered as being present. If it is administered, use the **change system-parameters maintenance** command to change the Packet Interface circuit packs administered to be those actually present. 3. If the test continues to abort, follow normal escalation procedures.
1	FAIL	The Private Link Broadcast looparound test failed. The circuit pack will enter a fatal fault state when this occurs and the Packet Interface Maintenance software should put the circuit in a out-of-service state. Therefore by the time further action is taken, it is expected that the test will abort with ABORT code 1137 and a demand reset should be used to test the circuit pack. 1. Reset the circuit pack using the **reset packet-interace CS** command. Refer to the repair procedures for the Packet Interface Reset Test (#889) for further action. 2. If the test continues to fail, replace the Packet Interface circuit pack.

Continued on next page

Table 9-288. TEST #885 Private Loop Around Tests — *Continued*

Error Code	Test Result	Description/ Recommendation
2	FAIL	The Private Level 2 looparound test failed. The circuit pack will enter a fatal fault state when this occurs and the Packet Interface Maintenance software should put the circuit in a out-of-service state. Therefore by the time further action is taken, it is expected that the test will abort with ABORT code 1137 and a demand reset should be used to test the circuit pack. 1. Reset the circuit pack using the **reset packet-interace CS** command. Refer to the repair procedures for the Packet Interface Reset Test (#889) for further action. 2. If the test continues to fail, replace the Packet Interface circuit pack.

Continued on next page

Table 9-288. TEST #885 Private Loop Around Tests — *Continued*

Error Code	Test Result	Description/ Recommendation
3	FAIL	The Private Link Level 3 looparound test failed. The circuit pack may still be operational. 1. Retry the command. 2. If the test continues to fail with the same error code: a. If the system is not equipped with the High Reliability or Critical Reliability Configuration replace the Packet Interface circuit pack. b. If the system is equipped with the High Reliability or Critical Reliability Configuration and if the Packet Interface circuit pack is on the standby SPE, replace the circuit pack on the standby SPE. c. If the system is equipped with the High Reliability or Critical Reliability Configuration and if the Packet Interface circuit pack is on the active SPE, 3. Perform a planned SPE interchange by entering the command **reset system interchange**. Use the **status spe** command to determine when refresh is complete (between 2 to 10 minutes, depending on system size) and retry the test command. 4. If the test of the circuit pack on the standby SPE continues to fail, replace that circuit pack. 5. If the test continues to fail after the circuit pack is replaced, follow normal escalation procedures.

Continued on next page

Table 9-288. TEST #885 Private Loop Around Tests — *Continued*

Error Code	Test Result	Description/ Recommendation
	PASS	All the private looparound tests passed. The circuit pack is functioning properly. If the system is still unable to place calls on cabinets other than the SPE cabinet, then: 1. Display the error log using the command **display errors** and check for errors on the Packet Bus and Maintenance/Test circuit pack. Clear those errors first. 2. Check all other circuit packs connected to the Packet Bus in the same cabinet. Packet Bus failures are likely to be caused by a faulty circuit pack connected to the backplane or bent pins on the back plane. Refer to the PKT-BUS maintenance documentation for repair procedures. 3. If the test continues to fail, follow normal escalation procedures.

Maintenance Looparound Test (#886)

This test checks whether the Packet Interface circuit pack can send and receive data correctly. It establishes a LAPD link from a Packet Interface circuit pack back to the same Packet Interface circuit pack and transmits and receives test data over that testing link. While timing signals from the Packet Bus are used for the data transfer, the data itself is looped around on the circuit pack at the interface to the Packet Bus and does not get sent over the Packet Bus.

NOTE:
This test is not run if the Packet Interface circuit pack is on a standby SPE in a system equipped with duplicated SPEs. However, a failure of the Maintenance Looparound test may have caused an SPE interchange which would result in an alarm associated with the looparound failure error code 769 being reported against a Packet Interface circuit pack that is currently on the standby SPE. If that is the case, and if all other Packet Interface tests associated with the **test packet-interface CS long** pass, force the standby SPE to go active by using the SPE-SELECT switches. Then enter the **test packet-interface CS** command to run the Maintenance Loop Around test to make sure the problem has been cleared.

Table 9-289. TEST #886 Maintenance Loop Around Test

Error Code	Test Result	Description/ Recommendation
1006 1137	ABORT	Packet Interface circuit pack is in the out-of-service state so normal maintenance tests will not run on that circuit pack. 1. Request a Packet Interface circuit pack reset using the **reset packet-interface CS** command. Refer to the Packet Interface Reset Test (#889) maintenance documentation for further action.
1139	ABORT	The Packet Bus is alarmed 1. Try to retire the alarm associated with the Packet Bus. Refer to the Alarm Log via the **display alarms** command. Refer to the maintenance documentation for Packet Bus Maintenance for further action. 2. Retry the command when the alarm associated with the Packet Bus is retired.

Continued on next page

Table 9-289. TEST #886 Maintenance Loop Around Test — *Continued*

Error Code	Test Result	Description/ Recommendation
1335	ABORT	Internal System Error. The Packet Interface circuit pack is on the standby SPE and this test is not allowed to execute on a Packet Interface circuit pack on the standby SPE. 1. If you wish to run this test on the standby Packet Interface, you must first make it active with **reset system interchange**. Be sure you understand the implications explained in *Planned SPE Interchange* in Chapter 5, "Responding to Alarms and Errors".
1338	ABORT	The test is not allowed to run since a planned SPE interchange is in progress. A planned interchange may be caused by 24 hour scheduled testing. During this time the terminal will be held out of service but it should recover automatically after 3 minutes. 1. Wait 3 minutes and retry the command. 2. If the test continues to abort, follow normal escalation procedures.
1373	ABORT	Could not establish the link loop around link to run this test. 1. Retry the command at 1-minute intervals, a maximum of 3 times. 2. If the test continues to abort, follow normal escalation procedures.
2060	ABORT	Packet link bus went down during maintenance looparound test. 1. Retry the command at 1-minute intervals, a maximum of 5 times. 2. If there are errors associated with the Packet Bus, refer to the maintenance information associated with the Packet Bus. 3. If the test continues to abort, follow normal escalation procedures.

Continued on next page

Table 9-289. TEST #886 Maintenance Loop Around Test — *Continued*

Error Code	Test Result	Description/ Recommendation
2100	ABORT	Could not allocate the necessary system resources to run this test. 1. Retry the command at 1-minute intervals, a maximum of 5 times. 2. If the test continues to abort, follow normal escalation procedures.
2500	ABORT	Internal System Error 1. Retry the command at 1-minute intervals, a maximum of 5 times. 2. If the test continues to abort, follow normal escalation procedures.
	NO_ BOARD	The Packet Interface circuit pack is administered but it is not detected as being physically present. 1. If the Packet Interface circuit pack is present, replace it. 2. If the Packet Interface circuit pack is not physically present, use the **display system-parameters maintenance** command to check if the Packet Interface circuit pack is administered as being present. If it is administered, use the **change system-parameters maintenance** command to change the Packet Interface circuit packs administered to be those actually present. 3. If the test continues to abort, follow normal escalation procedures.

Continued on next page

Table 9-289. TEST #886 Maintenance Loop Around Test — *Continued*

Error Code	Test Result	Description/ Recommendation
1-3	FAIL	The test failed. Maintenance was unable to establish a looparound link from the Packet Interface circuit pack back to itself or was unable to receive data that was sent out over one side of the looparound link. 1. Issue the **test packet-interface CS** command to retry the test. If the same error code is observed, background maintenance software will automatically attempt to reset the circuit pack and clear the problem. 2. Retry the command and if the test fails, replace the circuit pack. 3. If the test continues to fail after replacing the circuit pack, run the **test packet P long** command. If any of the tests fail, the fault may be on the Packet Bus. Refer to the PKT-BUS (Packet Bus) Maintenance documentation for recommended repair procedures. 4. If the test continues to fail after the circuit pack is replaced and with no other alarms associated with the Packet Bus or circuit packs connected to the Packet Bus, follow normal escalation procedures.
	PASS	This test passed. The circuit pack and its interface with the SPE are functioning properly. If the system is unable to place calls on cabinets other than the SPE cabinet, then: 1. Check for errors on the Packet Bus and Maintenance/Test circuit pack. Solve those errors first. 2. Check all other circuit packs connected to the Packet Bus in the same cabinet. Packet Bus failures are likely to be caused by a faulty circuit pack connected to the backplane or bent pins on the back plane. 3. Check the Packet Interface circuit pack connections to the Packet Bus.

Read and Clear Board Counters (#887)

This test involves sending commands to read on-circuit pack error counters on the Packet Interface circuit pack. It also verifies the message interface between the SPE and the Packet Interface circuit pack.

This test checks different circuit pack counters depending on whether the circuit pack is on the active or standby SPE.

If the Packet Interface circuit pack is on the active SPE, this test reads and clears the Parity Error counter and FIFO Overflow counter. Those counters are not used when a Packet Interface circuit pack is in standby mode.

If the Packet Interface circuit pack is on the standby SPE, this test reads but does not clear a Translation RAM counter. The Translation RAM counter is not cleared since the number of bad translations RAM locations indicates bad locations that cannot be used. For a Packet Interface Circuit Pack on the active SPE, information about the number of bad Translation location is sent to maintenance software as an in-line error from the circuit pack so it is not necessary to read a counter location.

Table 9-290. TEST #887 Read and Clear Board Counters

Error Code	Test Result	Description/ Recommendation
1006 1137	ABORT	Packet Interface circuit pack is in the out-of-service state so normal maintenance tests will not run on that circuit pack. 1. Request a Packet Interface circuit pack reset using the **reset packet-interface CS** command. Refer to the Packet Interface Reset Test (#889) maintenance documentation for repair procedures.
1338	ABORT	The test is not allowed to run since a planned SPE interchange is in progress. A planned interchange may be caused by 24 hour scheduled testing. During this time the terminal will be held out of service but it should recover automatically after 3 minutes. 1. Wait 3 minutes and retry the command. 2. If the test continues to abort, follow normal escalation procedures.
1339	ABORT	The test could not run on the standby Packet Interface circuit pack because the standby SPE is unavailable. 1. Refer to the STBY-SPE maintenance documentation for information on why a standby SPE may be unavailable and what repair actions should be taken. The **status spe** screen should indicate that handshake is down. This may be caused by a variety of reasons such as the setting the SPE-SELECT switches on the DUPINT circuit packs to the position of the active SPE, a failure of the DUPINT circuit pack, or loss of power on the standby SPE, The *SPE Selected field* on the **status spe** screen will display *spe a* or *spe b* if the SPE-SELECT switches are in the a or b position, respectively.

Continued on next page

Table 9-290. TEST #887 Read and Clear Board Counters — *Continued*

Error Code	Test Result	Description/ Recommendation
1347	ABORT	The test could not run because refresh of the standby SPE's memory is not complete. 1. Enter **status spe** and verify that refresh is not complete. Wait until the status screen indicates that refresh is complete and try the command again. The status screen should indicate that shadowing is on. If some event such as a major alarm on a Packet Interface circuit pack on the standby SPE causes shadowing to turn off, refresh cannot complete and abort code 1350 will be returned when the test packet-interface command is entered. 2. If the test continues to abort, follow normal escalation procedures.
1350	ABORT	The test could not run because memory shadowing has not started. 1. Enter **status spe** and verify that shadowing has not started. The SPE is locked when the SPE-SELECT switches on the DUPINT circuit pack are set to the position of the active SPE. Return the switches to the neutral position. If the SPE is not locked, verify that there are no alarms active for the standby SPE. If there are, enter **display alarms** and verify that there are no major alarms against the standby Packet Interface circuit packs. If there are, clear those alarms first. 2. If the test continues to abort, follow normal escalation procedures.

Continued on next page

Table 9-290. TEST #887 Read and Clear Board Counters — *Continued*

Error Code	Test Result	Description/ Recommendation
2000	ABORT	Response to the test request was not received within the allowable time period. If the system is equipped with the High Reliability or Critical Reliability Configuration and if the Packet Interface circuit pack is on the standby SPE, this abort code may indicate that the standby SPE is not responding to the handshake message. If this is the case, the standby SPE maintenance software may take up to two minutes to indicate that handshake communication with the standby SPE is down. The ABORT code will then change to 1339 (standby SPE unavailable). 1. Retry the command at 1-minute intervals, a maximum of 3 times. 2. If the test continues to abort with this abort code, follow normal escalation procedures.
2500	ABORT	Internal System Error 1. Retry the command. 2. If the test continues to abort, follow normal escalation procedures.
	NO_ BOARD	The Packet Interface circuit pack is administered but it is not detected as being physically present. 1. If the Packet Interface circuit pack is present, replace it. 2. If the Packet Interface circuit pack is not physically present, use the **display system-parameters maintenance** command to check if the Packet Interface circuit pack is administered as being present. If it is administered, use the **change system-parameters maintenance** command to change the Packet Interface circuit packs administered to be those actually present. 3. If the test continues to abort, follow normal escalation procedures.

Continued on next page

Table 9-290. TEST #887 Read and Clear Board Counters — *Continued*

Error Code	Test Result	Description/ Recommendation
256 512 768	FAIL	The Packet Interface circuit pack on the active SPE has an error counter set. The following error codes are possible: 256: Parity error 512: FIFO overflow 768: Parity error and FIFO overflow error 1. If error code 256 or 768 is reported the Packet Interface circuit pack received a parity error off the Packet Bus. a. First check for alarms logged against the Packet Bus. Refer to the PKT-BUS maintenance documentation to clear those errors first. b. Then check for alarms and errors logged against other circuit packs connected to the Packet bus in the Processor Port Network cabinet. A list of packet circuit packs is presented in the first section of this repair procedure. Refer to the repair procedures for those circuit packs, in this manual, to clear those errors first. c. If the system is not equipped with the High Reliability or Critical Reliability Configuration, replace the circuit pack at a time that would cause the least disruption of service. The circuit pack is still functional but should be replaced. d. If the system is equipped with the High Reliability or Critical Reliability Configuration and if the Packet Interface circuit pack is on the standby SPE, replace that circuit pack. e. If the system is equipped with the High Reliability or Critical Reliability Configuration and if the Packet Interface circuit pack is on the active SPE, perform a planned SPE interchange by entering the command **reset system interchange**. Replace the circuit pack on the standby SPE. f. If the test continues to fail after the circuit pack is replaced, follow normal escalation procedures

Continued on next page

Table 9-290. TEST #887 Read and Clear Board Counters — *Continued*

Error Code	Test Result	Description/ Recommendation
256 512 768	FAIL *(cont'd.)*	2. If error code 512 or 768 is reported for a Packet Interface on an **active SPE**, the receive FIFO in the PKT-INT has overflowed. This may be an indication that additional Packet Interface circuit packs are required. For the current hardware configuration, only one Packet Interface circuit pack is allowed so the problem should be escalated if the repair steps presented below do not correct the problem. Retry the command after a one minute delay and if the test continues to fail: a. If the system is equipped with the High Reliability or Critical Reliability Configuration and if the Packet Interface circuit pack is on the active SPE, perform a planned SPE interchange by entering the command **reset system interchange**. Replace the circuit pack b.) Otherwise, (the system is not equipped with the High Reliability or Critical Reliability Configuration) replace the circuit pack at a time that would cause the least service disruption. 3. If error code 512 or 768 is reported for a Packet Interface on a standby SPE, replace the Packet Interface circuit pack. 4. If the test continues to fail, follow normal escalation procedures.

Continued on next page

Table 9-290. TEST #887 Read and Clear Board Counters — *Continued*

Error Code	Test Result	Description/ Recommendation
1024-1096	FAIL	The Packet Interface circuit pack on the standby SPE has bad Translation RAM locations. A MINOR alarm is generated when the number of bad locations is from 1 and 4. A MAJOR alarm is generated if the number of bad locations is 5 or more. The MAJOR alarm prevents a planned SPE interchange. (A planned interchange may be administered to occur automatically every 24 hours or it may be requested by using the **reset system interchange** command.) 1. If a MAJOR alarm is associated with this error, replace the alarmed Packet Interface circuit pack. 2. If a MINOR alarm is associated with this error, replace the alarmed Packet Interface circuit pack at a time that would cause the least disruption to service.
	PASS	The SPE is able to communicate with the Packet Interface circuit pack. If problems are still reported on the circuit pack, check for failures using the Private Looparound test (#885) and Maintenance Looparound test (#886).

Active-Standby Peer Link Test (#888)

The Active-Standby Peer Link Test is only run in a system equipped with the High Reliability or Critical Reliability Configuration. It verifies that the Peer Link can be set up between the active and standby SPEs. The Peer Link is a link set up across the Packet Bus between the Packet Interface circuit pack on the active and standby SPEs. It is used for forwarding data and control messages between the active and standby SPE in preparation for a planned SPE interchange. This test not only checks the operation of setting up a Peer Link but it also verifies that the active and standby Packet Interface circuit packs can communicate over the Packet Bus.

This test is run against the standby Packet Interface circuit pack although it checks functionality on both the active and standby Packet Interface Circuit Packs.

Table 9-291. TEST #888 Active-Standby Peer Link Test

Error Code	Test Result	Description/ Recommendation
1006 1137	ABORT	Packet Interface circuit pack is in the out-of-service state so normal maintenance tests will not run on that circuit pack. 1. Request a Packet Interface circuit pack reset using the **reset packet-interface CS** command. Refer to the Packet Interface Reset Test (#889) repair procedures for further action.
1139	ABORT	The Packet Bus is alarmed. 1. Try to retire the alarm associated with the Packet Bus. Refer to the Alarm Log via the **display alarms** command. Refer to the PKT-BUS Packet Bus maintenance documentation for further action. 2. Retry the command when the alarm associated with the Packet Bus is retired.
1336	ABORT	Internal System Error. 1. If you wish to run this test on the standby Packet Interface, you must first make it active with **reset system interchange**. Be sure you understand the implications explained in *Planned SPE Interchange* in Chapter 5, "Responding to Alarms and Errors".

Continued on next page

Table 9-291. TEST #888 Active-Standby Peer Link Test — *Continued*

Error Code	Test Result	Description/ Recommendation
1337	ABORT	The test is not allowed to run since a PNC (Port Network Connectivity) interchange is in progress. A PNC interchange may be initiated on demand with the use of the **reset pnc interchange** command or as a result of a recovery action. 1. Wait 3 minutes and retry the command. 2. If the test continues to abort, follow normal escalation procedures.
1338	ABORT	The test is not allowed to run since a planned SPE interchange is in progress. A planned interchange may be caused by 24 hour scheduled testing. During this time the terminal will be held out of service but it should recover automatically after 3 minutes. 1. Wait 3 minutes and retry the command. 2. If the test continues to abort, follow normal escalation procedures.
1339	ABORT	The test could not run on the standby Packet Interface circuit pack because the standby SPE is unavailable. 1. Refer to the STBY-SPE maintenance documentation for information on why a standby SPE may be unavailable and what repair actions should be taken. The **status spe** screen should indicate that handshake is down. This may be caused by a variety of reasons such as the setting the SPE-SELECT switches on the DUPINT circuit packs to the position of the active SPE, a failure of the DUPINT circuit pack, or loss of power on the standby SPE. The *SPE Selected field* on the **status spe** screen will display *spe a* or *spe b* if the SPE-SELECT switches are in the a or b position, respectively.

Continued on next page

Table 9-291. TEST #888 Active-Standby Peer Link Test — *Continued*

Error Code	Test Result	Description/ Recommendation
1347	ABORT	The test could not run because refresh of the standby SPE's memory is not complete. 1. Enter **status spe** and verify that refresh is not complete. Wait until the status screen indicates that refresh is complete and try the command again. The status screen should indicate that shadowing is on. If some event such as a major alarm on a Packet Interface circuit pack on the standby SPE causes shadowing to turn off, refresh cannot complete and abort code 1350 will be returned when the test packet-interface command is entered. 2. If the test continues to abort, follow normal escalation procedures.
1350	ABORT	The test could not run because memory shadowing has not started. 1. Enter **status spe** and verify that shadowing has not started. The SPE is locked when the SPE-SELECT switches on the DUPINT circuit pack are set to the position of the active SPE. If the SPE is licked, return the switches to the neutral position. If the SPE is not locked, verify that there are no alarms active for the standby SPE. If there are, enter **display alarms** and verify that there are no major alarms against the standby Packet Interface circuit packs. If there are, clear those alarms first. 2. If the test continues to abort, follow normal escalation procedures.

Continued on next page

Table 9-291. TEST #888 Active-Standby Peer Link Test — *Continued*

Error Code	Test Result	Description/ Recommendation
2000	ABORT	Response to the test request was not received within the allowable time period. If the system is equipped with the High Reliability or Critical Reliability Configuration and if the Packet Interface circuit pack is on the standby SPE, this abort code may indicate that the standby SPE is not responding to the handshake message. If this is the case, the standby SPE maintenance software may take up to two minutes to indicate that handshake communication with the standby SPE is down. The ABORT code will then change to 1339 (standby SPE unavailable). 1. Retry the command at 1-minute intervals, a maximum of 3 times. 2. If the test continues to abort with this abort code, follow normal escalation procedures.
2500	ABORT	Internal System Error 1. Retry the command. 2. If the test continues to abort, follow normal escalation procedures.
	NO_ BOARD	The Packet Interface circuit pack is administered but it is not detected as being physically present. 1. If the Packet Interface circuit pack is present, replace it. 2. If the Packet Interface circuit pack is not physically present, use the **display system-parameters maintenance** command to check if the Packet Interface circuit pack is administered as being present. If it is administered, use the **change system-parameters maintenance** command to change the Packet Interface circuit packs administered to be those actually present. 3. If the test continues to abort, follow normal escalation procedures.

Continued on next page

Table 9-291. TEST #888 Active-Standby Peer Link Test — *Continued*

Error Code	Test Result	Description/ Recommendation
1	FAIL	Peer link setup between the active and standby Packet Interface circuit packs failed. 1. Use the **display alarms** command to display the active alarms. If there are any errors associated with the Packet Bus, refer to the PKT-BUS maintenance documentation to clear the Packet Bus problems first. 2. Retry the test command after a one minute delay. 3. If the test continues to fail, replace the Packet Interface circuit pack on the standby SPE.

Continued on next page

Table 9-291. TEST #888 Active-Standby Peer Link Test — *Continued*

Error Code	Test Result	Description/ Recommendation
1 *(cont'd.)*	FAIL	4. If the test continues to fail: a. Use the **display alarms** command to display the active alarms. Verify that there are no alarms on the standby SPE components other than the PKT-INT alarms for the Peer Link failure. If there are other alarms for SPE components, clear those alarms first.Enter the **status spe** command and verify that refresh is complete. If it is not, refer to the repair procedures for STBY-SPE for further action. b. Initiate an SPE interchange by moving the SPE SELECT switches on the DUPINT circuit packs to the position corresponding to the carrier location of the standby SPE. This will cause an SPE interchange using a WARM restart, assuming refresh is complete. Established calls will not be disconnected. c. Replace the Packet Interface circuit pack on the standby SPE and restore the SPE SELECT switches to their neutral position. (Refer to Replacing SPE Circuit Packs in Chapter 5, "Responding to Alarms and Errors" for procedures for replacing circuit packs in a standby SPE carrier.) d. Enter the **status SPE** command at on minute intervals up to 10 minutes to check for completion of memory refresh. 5. If the test command continues to fail, follow normal escalation procedures.

Continued on next page

Table 9-291. TEST #888 Active-Standby Peer Link Test — *Continued*

Error Code	Test Result	Description/ Recommendation
2	FAIL	No response from the active Packet Interface circuit pack to a request to the Packet Interface on the active SPE for peer link setup between the active and standby Packet Interface circuit pack. 1. Retry the test command after a one minute delay. 2. If the test continues to fail: a. Use the **display alarms** command to display the active alarms. Verify that there are no alarms on the standby SPE components other than the alarm for the Peer Link failure. If there are, clear those alarms first. b. Initiate an SPE interchange by moving the SPE SELECT switches on the DUPINT circuit packs to the position corresponding to the carrier location of the standby SPE. This will cause an SPE interchange using a WARM restart. Established calls will not be disconnected. c. Replace the Packet Interface circuit pack on the standby SPE and restore the SPE SELECT switches to their neutral position. (Refer to Replacing SPE Circuit Packs in Chapter 5, "Responding to Alarms and Errors" for procedures for replacing circuit packs in a standby SPE carrier.) d. Enter the **status SPE** command at on minute intervals up to 10 minutes to wait for memory refresh to complete. 3. If the test command continues to fail, follow normal escalation procedures.
	PASS	The SPE is able to communicate with the Packet Interface circuit pack. If problems are still reported on the circuit pack, check for errors on the Private Looparound Tests (#885) and Maintenance Looparound Tests (#886).

Reset Test (#889)

The reset action initializes the Packet Interface circuit pack and causes the firmware on the Packet Interface circuit pack to run a comprehensive set of diagnostic tests.

The demand reset action will abort if the specified Packet Interface circuit pack is on an active SPE (versus a standby SPE) and if that Packet Interface circuit pack is in the in-service state.

A Packet Interface circuit pack is put in the out-of-service state automatically if it has been reset 3 times by background maintenance within the last 15 minutes, independent of the results of the reset action.

If the system is equipped with the High Reliability or Critical Reliability Configuration and if the Packet Interface circuit pack is on the standby SPE, the demand reset action will run if handshake is up, independent of the service state of the circuit pack. Shadowing is turned off automatically when a standby PKT-INT is reset. Memory refresh can then take up to 10 minutes to complete.

Table 9-292. TEST #889 Reset Test

Error Code	Test Result	Description/ Recommendation
1334	ABORT	The Packet Interface circuit pack command queue is full. This should be a temporary condition caused by a high rate of commands being sent to a Packet Interface circuit pack. Continued operation with a full command queue will cause a system WARM restart that may escalate to more severe restart levels. 1. Retry the command at 10 second intervals, a maximum of 5 times. 2. If the test continues to abort, follow normal escalation procedures.
1338	ABORT	The test is not allowed to run since a planned SPE interchange is in progress. A planned interchange may be caused by 24 hour scheduled testing. During this time the terminal will be held out of service but it should recover automatically after 3 minutes. 1. Wait 3 minutes and retry the command. 2. If the test continues to abort, follow normal escalation procedures.

Continued on next page

Table 9-292. TEST #889 Reset Test — *Continued*

Error Code	Test Result	Description/ Recommendation
1339	ABORT	The test could not run on the standby Packet Interface circuit pack because the standby SPE is unavailable. 1. Refer to the STBY-SPE maintenance documentation for information on why a standby SPE may be unavailable and what repair actions should be taken. The **status spe** screen should indicate that handshake is down. This may be caused by a variety of reasons such as the setting the SPE-SELECT switches on the DUPINT circuit packs to the position of the active SPE, a failure of the DUPINT circuit pack, or loss of power on the standby SPE, The *SPE Selected field* on the **status spe** screen will display *spe a* or *spe b* if the SPE-SELECT switches are in the a or b position, respectively.
1347	ABORT	The Packet Interface circuit pack on the standby SPE is in an uninstalled state even though it is physically present. This can be caused by replacing that circuit pack without following the ‘‘lock-and-power-down’’ procedure for replacing SPE circuit packs. 1. Use the **status packet-interface** command to determine the service state of the Packet Interface circuit pack. If the state is not "uninstalled", follow normal escalation procedures. 2. Remove and restore power to the standby SPE carrier. 3. Enter **status spe** and wait until that screen indicates that memory refresh is complete. 4. If refresh does not complete, check the alarm log for alarms against a shadowing-relevant component and follow recommendations for that component. 5. If there is an alarm against PKT-INT, replace the Packet Interface circuit pack and retry the command. 6. If the test continues to abort, follow normal escalation procedures.

Continued on next page

Table 9-292. TEST #889 Reset Test — *Continued*

Error Code	Test Result	Description/ Recommendation
1362	ABORT	The Reset test is not allowed to run because the Packet Interface circuit pack is in service. Resetting a Packet Interface circuit pack that is in-service on an active SPE is not allowed since this is a destructive test (existing phone calls involving telephones connected to Expansion Port Networks would be disconnected). 1. Use the **status packet-interface** command to determine the service state of the Packet Interface circuit pack. If the state is "out-of-service", try the Reset command again. 2. If the reset continues to abort with this same abort code and if the Packet Interface circuit pack is out of service, follow normal escalation procedures.
2000	ABORT	Response to the test request was not received within the allowable time period. If the system is equipped with the High Reliability or Critical Reliability Configuration and if the Packet Interface circuit pack is on the standby SPE, this abort code may indicate that the standby SPE is not responding to the handshake message. If this is the case, the standby SPE maintenance software may take up to two minutes to indicate that handshake communication with the standby SPE is down. The ABORT code will then change to 1339 (standby SPE unavailable). 1. Retry the command at 1-minute intervals, a maximum of 3 times. 2. If the test continues to abort with this abort code, follow normal escalation procedures.
2500	ABORT	Internal System Error 1. Retry the command. 2. If the test continues to abort, follow normal escalation procedures.

Continued on next page

Table 9-292. TEST #889 Reset Test — *Continued*

Error Code	Test Result	Description/ Recommendation
	NO_ BOARD	The Packet Interface circuit pack is administered but is not detected as being physically present. 1. If the Packet Interface circuit pack is present, replace it. 2. If the Packet Interface circuit pack is not physically present, use the **display system-parameters maintenance** command to check if the Packet Interface circuit pack is administered as being present. If it is administered, use the **change system-parameters maintenance** command to change the Packet Interface circuit packs administered to be those actually present. **NOTE:** If the system is equipped with the High Reliability or Critical Reliability Configuration, the Packet Interface entry on the system-parameters maintenance screen will show "y" if translation data is present for a Packet Interface circuit pack on either the active or standby SPE or if a Packet Interface circuit pack is present on either the active or standby SPE. The corresponding entry on the screen can only be changed from "y" to "n" if a Packet Interface circuit pack is not physically present in the active SPE. However, if the system is restarted with a restart level equal or greater than a WARM restart, the Packet Interface circuit pack maintenance software will automatically detect any Packet Interface circuit pack physically present on the active or standby SPE and the corresponding field on the system-parameters maintenance screen will show a ‘‘y.’’ 3. If the test continues to abort, follow normal escalation procedures.
5001	FAIL	The TDM clock on the Processor Port Network has failed. 1. Refer to the TDM-CLK maintenance documentation to clear this failure.

Continued on next page

Table 9-292. TEST #889 Reset Test — *Continued*

Error Code	Test Result	Description/ Recommendation
5002	FAIL	The Packet Bus on the Processor Port Network has failed. 1. Refer to the PKT-BUS maintenance documentation to clear this failure.

Continued on next page

Table 9-292. TEST #889 Reset Test — *Continued*

Error Code	Test Result	Description/ Recommendation
Any Other Than Those Listed Above	FAIL	The Packet Interface circuit pack diagnostic tests failed. If the system is equipped with the High Reliability or Critical Reliability Configuration, the reset will run only on demand if the Packet Interface circuit pack is on the standby SPE or if Packet Interface circuit pack is in an out-of-service state on the active SPE (which means an SPE interchange was not allowed because the standby SPE is not healthy). If the latter case is true, also refer to the repair procedures for STBY-SPE for clearing the problem on the standby SPE. 1. Retry the command **reset packet-interface** 2. If the reset fails, replace the circuit pack. (Refer to Replacing SPE Circuit Packs in Chapter 5, "Responding to Alarms and Errors" for procedures for replacing circuit packs in a standby SPE carrier.) 3. If the Packet Interface circuit pack is on the standby SPE, enter the **status SPE** command at one minute intervals up to 10 minutes after the circuit pack is replaced to check for completion of memory refresh. 4. If the test continues to fail after the Packet Interface circuit pack has been replaced, follow normal escalation procedures.
	PASS	The Packet Interface circuit pack diagnostic software passed. The Packet Interface circuit pack is put back into service automatically. If the Packet Interface on the standby SPE continues to report an in-line fatal fault code (error 257) and as a result goes into the out-of-service state even though the demand reset test passes, the firmware version of the Packet Interface circuit pack on the standby SPE may not be the same as the firmware version of the Packet Interface circuit pack on the active SPE. Use the **list configuration control** command to determine if the vintage of the Packet Interface circuit packs on the active and standby SPEs is the same.

PMS-LINK (Property Management System Link)

MO Name As It Appears in Alarm Log	Alarm Level	Initial System Technician Command to Run	Full Name of MO
PMS-LINK	MINOR	test pms l	PMS Link
PMS-LINK	WARNING	test pms	PMS Link

Property Management System (PMS) is a stand-alone computer system that environments such as hotels or hospitals use for services such as reservations, registration, messaging, housekeeping, night audit, billing, and inventory. The PMS Link provides a communications channel between the switch and the customer-owned PMS so that the PMS can interrogate the system for information related to the following features:

- Message Waiting Notification
- Controlled Restriction
- Housekeeping Status
- Check-in/Check-out
- Room Change/Room Swap

Refer to *DEFINITY Communications System Generic 3 Feature Description,* 555-230-204, for details of the PMS feature. The PMS device connects to the system via a data module (PDM, MPDM, DTDM) connected to a port on a TN754 Digital Line circuit pack which is administered as a data extension. A PMS device can also be connected through an ADU to a port on TN726B. The PMS link to the processor is via a system port. A system port is comprised of a port on the TN726B Data Line circuit pack and a port on the TN553 Packet Data circuit pack connected to each other in a null-modem fashion. Refer to the PDATA-PT section for information on the system port connectivity.

PMS Link maintenance provides a strategy for maintaining the link between the switch and a PMS device. The strategy includes a set of tests for periodic diagnosis, detection of errors during normal operation, actions for troubleshooting, and raising alarms for serious problems. PMS Link Maintenance uses a ‘‘try-and-wait’’ mechanism for maintaining the PMS Link. If a PMS Link is torn down due to an error, PMS Link Maintenance attempts to bring up the link immediately. If the Link Setup fails, PMS Link Maintenance will wait for five minutes before the next retry. If the number of retries reaches a threshold (12), a Minor alarm is raised for service attention.

PMS Link Maintenance does not cover the maintenance of the elements composing the PMS physical link (the external PMS device, Data Module (PDM/MPDM/DTDM), Digital Line Port of a TN754 Digital Line circuit pack, ADU,

or Data Line Port of TN726B Data Line circuit pack). If PMS Link Maintenance cannot restore the PMS Link, then the maintenance tests of these individual components of the PMS Link must be executed to diagnose faults. If the **test pms-link** command fails, no alarm will be generated.

The **list pms-down** command lists all events that have meaning to the PMS that have occurred while the link between the switch and the PMS was down. For example, any room status codes entered by hotel housekeeping staff during a time of PMS outage would be shown in this report.

Procedures for Restoring the PMS Link

1. Determine the status of the PMS Link.

   Enter **status pms** command and make sure that the PMS Link is not busied out for maintenance. If the link is ‘‘down,’’ then continue with the next step.

2. Where does the PMS Link connect?

   Enter **display system hospitality** and find out the destinations of the PMS Link.

3. Determine the status of the data extension.

   Enter **status data** extension command and verify whether the data extension is in in-service/idle state. If the data extension is NOT available, then look for the extension number in Alt Name field of Hardware Error Log. Refer to the XXX-BD (Common Port Circuit Pack) section for resolutions.

4. Is the external PMS device available?

   Make sure that the PMS device is ON-LINE and ready for service. Check the physical connectivity between Data Module and the PMS device.

5. If the problem is not found in the above steps, check the system port for any problems. Refer to the PDATA-PT section for for description about system port and its connectivity.

When restoring the PMS link it is necessary to execute maintenance test on different objects that comprise the PMS link It is recommended that you busy out the PMS link before trying to restore the link. When the PMS Link is busied out, all PMS Link maintenance actions are deactivated, and interference with tests of other MOs is prevented.

Hardware Error Log Entries and Test to Clear Values

PMS Link Maintenance Error Log Entries					
Error Type	**Aux Data**	**Associated Test**	**Alarm Level**	**On/Off Board**	**Test to Clear Value**
0*	0	Any	Any	Any	test pms sh r 1
18 (a)	0	busyout pms-link	WARNING	OFF	release pms-link
257 (b)	Any	Link Retry Test (#215)	MINOR/† WARNING	OFF	test pms-link l
513 (c)	Any	None			test pms-link
769 (d)	Any	None			
1025 (e)	40-49	None			
1281 (f)	10-19	None			
1537 (g)	N0-N9	None			
1793 (h)	Any	None			test pms-link
2049 (i)	Any	None			
2305 (j)	50-59	None			release pms-link or test pms-link
2561 (k)	Any	None			test pms-link
2817 (l)	100-109 200-209 300-309	None			
3073 (m)	70-79	None			
3841 (n)	20-29	None			

* Run the Short Test Sequence first. If all tests pass, run the Long Test Sequence. Refer to the appropriate test description and follow the recommended procedures.

† Minor alarms on this MO may be downgraded to Warning alarms based on the value used in the **set options** command.

Notes:

a. The PMS Link has been busied out with the **busyout pms-link** command. The link is torn down. Enter the **release pms-link** command to restore the link.

b. The Link Retry Test (#215) fails. An error was detected when setting up the link. Refer to the *Procedures for Restoring the PMS Link* above.

c. The PMS physical link is down for one of the following reasons:

   - Cable to the PMS device is disconnected.
   - The PMS device is powered off.
   - The data extension to which the PMS device connects has been busied out.

   Check the connectivity of wire and cable among wall jacket, data module, and the PMS device. Enter **status data <extension>** and verify that the data extension of the PMS device is in in-service/idle state. If the data extension is not available, then refer to *Procedures for Restoring the PMS Link* above.

d. There has been no communication between the switch and the PMS for a period of time specified in ‘‘system hospitality’’ administration. The PMS Link is torn down. To clear this error, refer to *Procedures for Restoring the PMS Link* above.

e. The link was taken down because the switch could not receive an incoming message from the PMS. The message from the PMS repeatedly had corrupted data or the switch received requests for acknowledgment but never received a message to be processed. If this error type occurs frequently (more than once a month), advise the customer to call the vendor of the PMS to check out the PMS device. Once the PMS Link is successfully established, this error disappears from the Hardware Error Log.

f. The link was taken down because the switch could not send an outgoing message. The message, which was sent but not acknowledged, was flushed. If this error type occurs frequently (more than once a month), advise the customer to call the vendor of the PMS to check out the PMS device. Once the PMS Link is successfully established, this error disappears from the Hardware Error Log.

g. The PMS has been busied out for maintenance at the request of the PMS. The PMS Link is torn down. The reason code (N), if present, is that supplied by the PMS in the request message. If this error type recurs frequently (that is, more than once a month), advise the customer to call the vendor of the PMS to check out the PMS device. Once the PMS Link is successfully established, this error disappears from the Hardware Error Log. No alarm is raised against this error.

h. Due to either heavy call traffic, or the PMS protocol message rate being faster than the PMS/PBX protocol specifications allow, the PMS Link is torn down. PMS Link maintenance software will wait for five minutes before attempting to set up the link again. If this error type occurs frequently (more than once a month), advise the customer to call the vendor of the PMS to check out the PMS device. Once the PMS Link is successfully

established, this error disappears from the Hardware Error Log. The PMS should be checked for adherence to message rate defined in the PMS/PBX protocol specifications. No alarm is raised against this error.

i. The attempt to swap the database between PBX and PMS failed three times consecutively due to excessive PMS/PBX protocol violations, buffer overflows, or PMS Link outages. The PMS Link is NOT torn down. If this error type occurs frequently (more than once a month), advise the customer to call the vendor of the PMS to check out the PMS device. Once the PMS Link is successfully established, this error disappears from the Hardware Error Log. No alarm is raised against this error.

j. The PMS Link has been busied out with the **busyout pms-link** command or has been brought down with the **test pms-link long** command. The PMS Link is torn down, and PMS Link maintenance will stop attempting to reestablish the link in the case where the **busyout pms-link** command has been used. When the **test pms-link long** command has been used, PMS Link maintenance will continue to try to reset the link. To restore the PMS Link after use of the **busyout pms-link** command, issue the **release pms-link** command. To restore the PMS Link after use of the **test pms-link long** command, issue the **test pms-link** command.

k. The PMS Link is physically established, but the protocol has not been started by the PMS before the protocol timer expires. The PMS Link is NOT torn down. If this error type occurs frequently (more than once a month), advise the customer to call the vendor of the PMS to check out the PMS device. Once the PMS Link is successfully established, this error disappears from the Hardware Error Log. The PMS should be checked to make sure that it will attempt to start the protocol according to the PMS/PBX protocol specifications. No alarm is raised against this error.

l. For Error Type 2817 look for the following AUX data:

10x The PMS violated the application protocol. The first message after a request to initiate a database exchange was not the start of a database exchange. The message is processed. If this error type with this aux data value occurs frequently (more than once a month), advise the customer to call the vendor of the PMS to check out the PMS device. Once the PMS Link is successfully established, this error disappears from the Hardware Error Log.

20x The PMS violated the application protocol. The start of a database exchange was received in a state in which it was not expected. The message is ignored. If this error type with this Aux data value occurs frequently (more than once a month), advise the customer to call the vendor of the PMS to check out the PMS device. Once the PMS Link is successfully established, this error disappears from the Hardware Error Log.

30x The PMS violated the application protocol. The end of a database exchange was received when no exchange was in progress. The message is ignored. If this error type with this Aux Data value occurs frequently (more than once a month), advise the customer to call the vendor of the PMS to check out the PMS device. Once the PMS Link is successfully established, this error disappears from the Hardware Error Log. No alarm is raised against this error.

The PMS should be assessed for adherence to the PMS/PBX protocol specifications.

m. The link was taken down by the switch because the threshold for application protocol violations has been exceeded by the PMS. The protocol never started and messages were received and/or messages were received in a state in which they were not expected. (Refer to Error Type 2817 for recommended strategy.)

n. Link was taken down by the switch because the threshold for link protocol violations has been exceeded by the PMS. PMS is sending ‘‘garbage’’ to the switch.

System Technician-Demanded Tests: Descriptions and Error Codes

Always investigate tests in the order presented in the table below when inspecting errors in the system. By clearing error codes associated with the *Link Retry Test*, for example, you may also clear errors generated from other tests in the testing sequence.

Order of Investigation	Short Test Sequence	Long Test Sequence	D/ND*
Link Tear Down Test (#213)		X	D
Link Retry Test (#215)	X	X	ND

* D = Destructive; ND = Nondestructive

Link Tear Down Test (#213)

This test is destructive.

This test disconnects the existing link between the system and the external PMS device. If the link has been disconnected already, then this test just returns "PASS." All resources allocated for a PMS Link are released after this test.

Table 9-293. TEST #213 Link Tear Down Test

Error Code	Test Result	Description/ Recommendation
40 50	ABORT	Internal System Error. 1. Retry the command at one-minute intervals a maximum of 5 times. 2. If the test continues to abort, escalate the problem.
1010	ABORT	The PMS Link has been busied out and placed in the out-of-service state. 1. Enter **release pms-link** command to release the PMS Link from busyout state. 2. Retry **test pms long** command to execute the test.
2012	ABORT	Internal System Error. 1. Retry the command at one-minute intervals a maximum of 5 times. 2. If the test continues to abort, escalate the problem.
	FAIL	Internal System Error. 1. Retry the command at one-minute intervals a maximum of 5 times. 2. If the test continues to abort, escalate the problem.
	PASS	The PMS Link is torn down.

Link Retry Test (#215)

This test sends a message to the PMS software process to make a data call to the extension where the PMS device connects. If the PMS Link is already up, then this test passes without making any data call.

Table 9-294. TEST #215 Link Retry Test

Error Code	Test Result	Description/ Recommendation
10 20	ABORT	Internal System Error. 1. Retry the command at one-minute intervals a maximum of 5 times. 2. If the test continues to abort, escalate the problem.
30	ABORT	Internal System Error. 1. Refer back to the ''Procedures for Restoring the PMS Link'' section for resolution.
1010	ABORT	The PMS Link has been busied out and placed in the out-of-service state. 1. Enter **release pms-link** command to release the PMS Link from busyout state. 2. Retry **test pms** command to execute the test.
2012	ABORT	Internal System Error. 1. Retry the command at one-minute intervals a maximum of 5 times. 2. If the test continues to abort, escalate the problem.
	FAIL	The PMS Link CANNOT be established. 1. Refer back to the ''Procedures for Restoring the PMS Link'' section for restoring the PMS Link.
	PASS	The PMS Link is up.

PMS-PRNT/JNL-PRNT (PMS Printer Link)

MO Name As It Appears in Alarm Log	Alarm Level	Initial System Technician Command to Run	Full Name of MO
PMS-PRNT/JNL-PRNT	MINOR	test journal [pms-log | wakeup-log] l	PMS Printer/ Journal Printer
PMS-PRNT/JNL-PRNT	WARNING	test journal [pms-log | wakeup-log]	PMS Printer/ Journal Printer

A journal printer is a printer to which Emergency Access to Attendant, Wakeup and Property Management System (PMS) events are printed as they occur. The PMS-log printer is used as a backup of the PMS output device to print an audit trail of all PMS transactions and Housekeeping Status Change events when the PMS Printer Link is not available. There may be one or two journal printers. If there is one, all events are printed there. If there are 2, then emergency access, wakeup events, and scheduled reports are printed on one printer (JNL-PRNT), and PMS events are printed at the other (PMS-PRNT).

The scheduled report printer is where summaries of daily wakeup activity and emergency access activity are printed. If the customer requests a summary report, the report will be printed exactly once per day.

The distinction between Journal and Scheduled report printers is logical rather than physical. Whether or not there are two printers, the scheduled reports are always sent to the printer that journals the wakeup and emergency access events. A scheduled report will temporarily suspend the journal activity. Upon completion of the scheduled report, journaling will be resumed after the printing of all the withheld events.

The journal printer device connects to the system via a data module (PDM, MPDM, DTDM) connected to a port on a TN754 Digital Line circuit pack that is administered as a data extension. A journal printer device can also be connected through an ADU to a port on TN726B Data Line circuit pack. The journal printer link to the processor is via a system port. comprised of a port on the TN726B Data Line circuit pack and a port on the TN553 Packet Data circuit pack connected to each other in a null-modem fashion. Refer to the PDATA-PT Maintenance Service Description for information on the system port connectivity.

PMS/JOURNAL Printer Link Maintenance provides a strategy for maintaining the link between the system and a PMS device (an external Journal Printer device). The strategy includes a set of tests for periodic diagnosis, detection of errors during normal operation, actions for troubleshooting, and raising alarms for serious problems. PMS Printer Link Maintenance uses a try-and-wait mechanism. If a PMS Printer Link is torn down due to an error, PMS Printer Link Maintenance

will try to bring the link up immediately. If the link setup fails, PMS Link Maintenance will wait for five minutes before the next trial. If the number of retries reaches a threshold (15), a Minor alarm is raised for service attention.

PMS Printer Link Maintenance does not cover the maintenance of the elements composing the journal printer physical link (for instance, the external printer device, Data Module (PDM/MPDM/DTDM), Digital Line Port or ADU and Data Line Port). If PMS Printer Link maintenance cannot restore the PMS Printer Link, then the maintenance tests of individual components of the PMS Link must be executed to diagnose faults.

The **list pms-down** command lists all events that have meaning to the PMS that have occurred while the link between the switch and the PMS was down. For example, any room status codes entered by hotel housekeeping staff during a time of PMS outage would be reflected in this report.

Procedures for Restoring the PMS Printer Link

1. Determine the status of the PMS Printer Link.

   Enter **status journal-printer wakeup-log|pms-log** and make sure that the journal printer link is not busied out for maintenance. If the link is down, then continue to the next step.

2. Where does the journal printer link connect?

   Enter **display system hospitality** and find out the destinations of the PMS Printer Link.

3. Determine the status of the data extension.

   Enter **status data extension** command and verify that the data extension is in the in-service/idle state. If the data extension is *not* available, look for the extension number in the Alt Name field of the Hardware Error Log. Refer to XXX-BD (Common Port Circuit Pack) Maintenance documentation for resolutions.

4. Is the external printer device available?

   Make sure that the printer device is ON-LINE and ready for service. Check the physical connectivity between Data Module and the printer device.

5. If the problem is not found in the above steps, check the system port for any problems. Refer to the PDATA-PT section of Chapter 9, "Maintenance Object Repair Procedures" for a description of system ports.

It should be noted that when restoring the PMS printer link, it is necessary to execute tests on different maintenance objects that comprise the link; it is recommended that you busy out the PMS printer link before trying to restore the link. If the PMS printer Link is busied out, then all PMS printer Link maintenance actions are deactivated, and interference with tests of other MOs is prevented.

Hardware Error Log Entries and Test to Clear Values

PMS-PRNT/JNL-PRNT Link Maintenance Error Log Entries					
Error Type	**Aux Data**	**Associated Test**	**Alarm Level**	**On/Off Board**	**Test to Clear Value**
0*	0	Any	Any	Any	test journal wakeup-log|pms-log sh
18 (a)	0	busyout journal wakeup-log/pms-log	WARNING	OFF	release journal wakeup-log|pms-log
257 (b)	Any	Link Retry Test(#215)	MINOR/† WARNING	OFF	test journal wakeup-log|pms-log l
513 (c)	Any				test journal wakeup-log|pms-log
769 (d)					

* Run the Short Test Sequence first. If all tests pass, run the Long Test Sequence. Refer to the appropriate test description and follow the recommended procedures. Both PMS Printer and Journal Printer are administered to the same extension, and the printer is not connected. Refer to the *Procedures for Restoring the PMS Printer Link* above for resolution.

† Minor alarms on this MO may be downgraded to Warning alarms based on the value used in the **set options** command.

Notes:

a. Craft busied out the Journal Printer Link. The link is torn down. Enter **release** command to restore the link.

b. Link Retry Test (#215) fails. Physical link cannot be set up, usually because of hardware problems such as power off or cable disconnect. Refer to *Procedures for Restoring the PMS Printer Link* above for resolution.

c. Physical link cannot be set up, usually because of hardware problems such as power off or cable disconnect. The PMS Printer Link physical link is down due to the following causes: cable to the printer device is disconnected, the printer device is powered off, or the data extension where the printer device connects to has been busied out. Check the connectivity of wire and cable among wall jacket, data module, and the printer device. Enter **status data <extension>** and verify that the data extension of the printer device is in the in-service/idle state. If the data extension is not available, then refer to the ‘‘Procedures for Restoring the PMS Printer Link’’ section for resolution.

d. Link idle timer; link comes down. This error indicates that the printer device is in an off-line state, for example, paper jam or paper out for a printer device. Check the printer device and act promptly to put it back to on-line state. Enter **test journal wakeup-log|pms-log** command to set up the printer link.

System Technician-Demanded Tests: Descriptions and Error Codes

Always investigate tests in the order presented in the table below when inspecting errors in the system. By clearing error codes associated with the *Link Retry Test*, for example, you may also clear errors generated from other tests in the testing sequence.

Order of Investigation	Short Test Sequence	Long Test Sequence	D/ND*
Link Tear Down Test (#213)		X	D
Link Retry Test (#215)	X	X	ND

* D = Destructive; ND = Nondestructive

Link Tear Down Test (#213)

This test is destructive.

This test disconnects the existing link between the system and the external printer device. If the link has been disconnected already, this test just returns PASS. All resources allocated for a PMS Printer Link are released after this test.

Table 9-295. TEST #213 Link Tear Down Test

Error Code	Test Result	Description/ Recommendation
40	ABORT	Internal System Error.
50	ABORT	Internal System Error. 1. Retry the command at one-minute intervals a maximum of 5 times. 2. If the test continues to abort, escalate the problem.
1010	ABORT	The link has been busied out to out-of-service. 1. Enter **release journal wakeup-log|pms-log** command to release the link from busyout state. 2. Retry **test journal wakeup-log|pms-log l** command to execute the test.
2012	ABORT	Internal System Error. 1. Retry the command at one-minute intervals a maximum of 5 times. 2. If the test continues to abort, escalate the problem.
	FAIL	Internal System error. 1. Retry the command at one-minute intervals a maximum of 5 times. 2. If the test continues to abort, escalate the problem.
	PASS	The link is torn down.

Link Retry Test (#215)

This test sends a message to the journal printer management software process to make a data call to the extension where the printer device connects to. If the journal printer link is already up, this test passes without making any data call.

Table 9-296. TEST #215 Link Retry Test

Error Code	Test Result	Description/ Recommendation
10	ABORT	Internal System Error.
20	ABORT	Internal System Error. 1. Retry the command at one-minute intervals a maximum of 5 times. 2. If the test continues to abort, escalate the problem.
30	ABORT	Internal System Error. 1. Refer to the “Procedures for Restoring the PMS Printer Link’’ section for instructions.
1010	ABORT	The PMS Printer Link has been busied out to out-of-service. 1. Enter **release journal wakeup-log|pms-log** command to release the link from busyout state. 2. Retry **test journal wakeup-log|pms-log l** command to execute the test.
2012	ABORT	Internal System Error. 1. Retry the command at one-minute intervals a maximum of 5 times. 2. If the test continues to abort, escalate the problem.
	FAIL	The link CANNOT be established. 1. Refer to the “Procedures for Restoring the PMS Printer Link’’ section for instructions.
	PASS	The link is up.

PNC-DUP (PNC Duplication)

MO Name As It Appears in Alarm Log	Alarm Level	Initial System Technician Command to Run	Full Name of MO
PNC-DUP	NA	status pnc	PNC duplication

In systems with the Critical Reliability option, the following components, which together comprise the Port Network Connectivity (PNC), are duplicated:

- Expansion Interface (EI) TN570 circuit packs in the port networks (PNs)
- Switch Node Interface (SNI) TN573 circuit packs in switch nodes
- DS1 Converter (DS1C) TN574 circuit packs for remote EPN connections
- Fiber-optic cables (metallic in certain cases) connecting the above circuit packs
- DS1 facilities between the DS1Cs
- Switch Node Clock (SNC) TN572 circuit packs

Although not part of the PNC, Tone-Clock circuit packs are also duplicated in each PN. The PNC is available in two different configurations: direct connect, in which each port network is connected directly by fiber optic links to each other PN; and Center Stage Switch (CSS) which utilizes one or two switch nodes to interconnect the PNs. All systems have one Processor Port Network (PPN). Direct connect systems can have up to two Expansion Port Networks (EPNs). CSS systems with one switch node can have up to 15 EPNS. CSS systems with two switch node can have up to 21 EPNS. See Figure 9-89 on page P-223 and Figure 9-90 on page P-224.

PNC duplication architecture utilizes an active/standby duplication scheme, in which one complete set of PNC components supports call processing, while the duplicate PNC is held in reserve. All calls on the active PNC are simultaneously set up, or shadowed, on the standby PNC in order for it to be capable of instantly assuming active status when necessary, allowing for interchanges without service disruption (in the case of single faults).

The PNC-DUP maintenance object tracks the health of the active and standby PNCs, controls planned and spontaneous interchanges, and manages related functions such as double call refresh and unrefresh, antithrashing, and so on. The main responsibility of PNC-DUP is to recover the system to full service in the event of a fault. In the event of multiple faults PNC-DUP will do its best to maximize service continuity.

PNC duplication does not introduce any additional types of hardware or hardware faults, and there are no tests associated with the PNC-DUP MO. Instead, it's error log entries are used to log useful information about the

occurrence and causes of interchanges in order to facilitate diagnosis of problems which can then be addressed by using the documentation for the individual maintenance object involved.

PNC-DUP Related Commands

The following commands and their output screens are fully described in Chapter 8, "Maintenance Commands".''

status pnc	This command displays information about the operational status of both PNCs including state of health, alarms, busyouts and locks, and so on.
reset pnc interchange	This command is used to initiate a demand PNC interchange. If the standby is healthy (state of health indexes all zero), there is no effect on service. Otherwise, calls may be dropped.
set pnc	This command is used to lock or unlock the active PNC, preventing interchanges. It does not interfere with double call setup.
busyout pnc	This removes the standby PNC from service. See also the following section on busyout of PNC components.

Busyouts and PNC-DUP

Busyout pnc puts the standby PNC in the busyout state. In this condition:

1. Double call set up is turned off.
2. The standby PNC is unrefreshed; existing duplicate call connections are removed.
3. PNC interchanges are prevented.

Upon release, interchanges are re-enabled and a global refresh of double call setup on the standby is performed.

When PNC duplication is in effect:

- An active PNC component cannot be busied-out.
- A standby PNC component can only be busied-out when the standby PNC is first busied-out.
- The standby PNC cannot be released unless all standby PNC components are released.

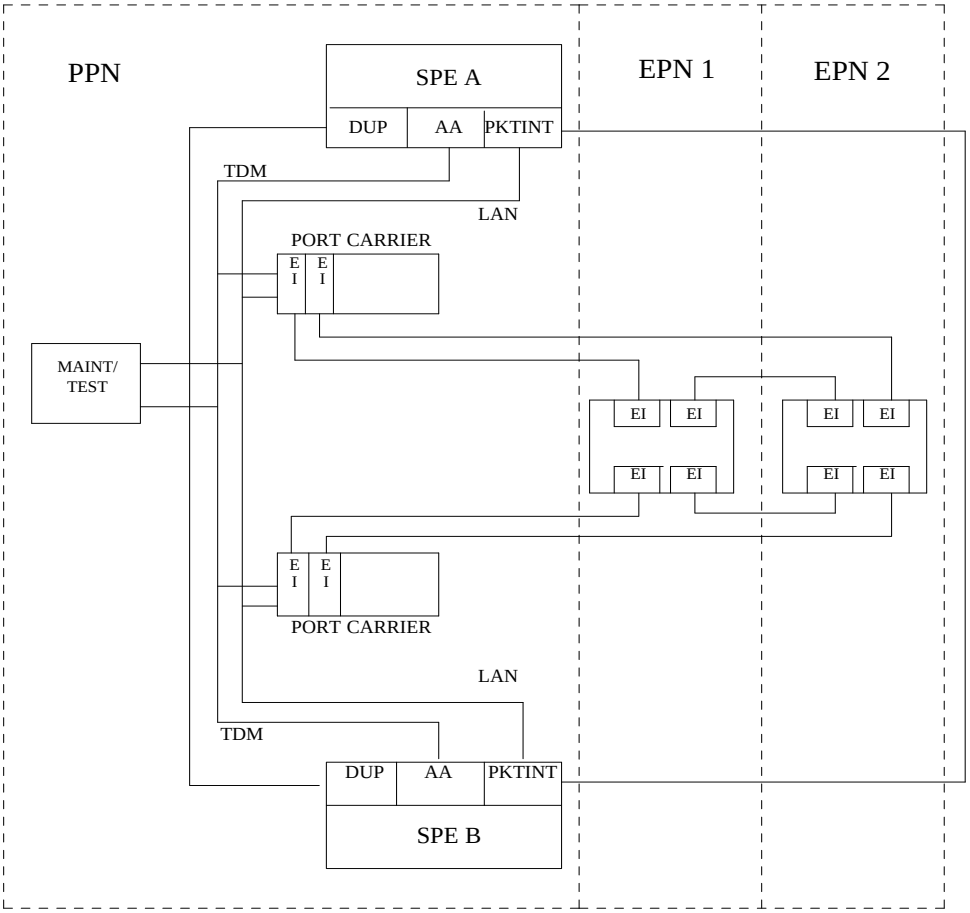

Figure 9-89. Duplicated Direct Connect PNC Connectivity

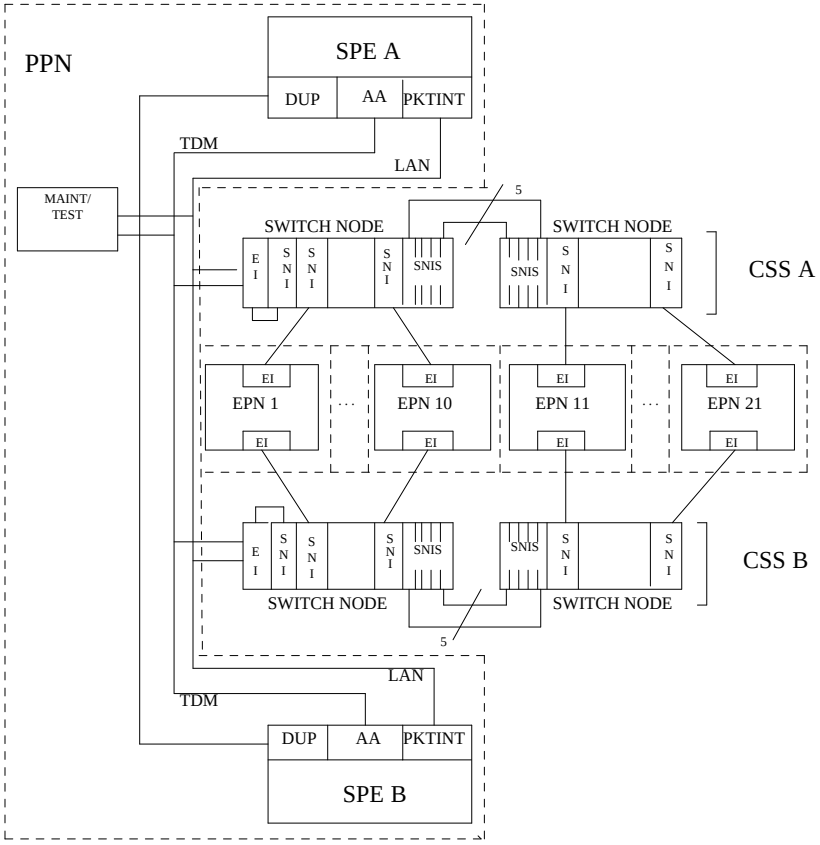

Figure 9-90. Duplicated PNC with Center Stage Switch

Enabling and Removing PNC Duplication

To enable PNC duplication perform the following sequence of steps:

1. Enable PNC-DUP on the **change system-parameters customer-options** form.
2. Fully administer duplicate fiber link connectivity. Verify by **list fibers**.
3. Trun on PNC-DUP via the **change system-parameters duplication** form. This is note allowed if any component of either PNC (A or B) is busied out.

4. The system must insert all connectivity-related components for both standby and active PNC. For CSS configurations this takes up to 5 minutes depending upon CSS circuit pack insertion. For Direct Connect configurations this is declared complete at 5 minutes after the first appearance of the terminal login prompt.
5. The PNC-DUP initialization anti-thrashing timer must expire (this occurs 5 minutes after completion of board insertion, PNC interchange, or system reset of level 2 or higher).

To disable PNC duplication perform the following sequence of steps:

1. Verify that the A-PNC is active. A forced interchange may be required. See **reset pnc** in Chapter 8, "Maintenance Commands".
2. Busyout the standby PNC (B-PNC).
3. Turn off the system parameter for PNC-DUP via **change system-parameters duplication**.

   After PNC duplication has been removed, configuration audits will generate the alarm shown below and possibly others. To clear this alarm, the B-PNC fibers, circuit packs in switch node carriers (EIs, SNIs, SNCs, and DS1Cs), and switch node carriers must be removed as outlined in the following steps.

   ```
   01D   SN_CONF     5000  255
   ```

   In this case, 01D is the B-PNC switch node from which uplication was removed.
4. Remove the B-PNC fibers by removing the Endpoint Board Locations on the **change fiber** form for all fibers. For fibers using DS1Cs, remove the B-PNC DS1C Board Locations on page 3 of the **change fiber** form.
5. Remove the B-PNC circuit packs starting with the switch node carrier most distant from the SPE complex. Use **change circuit pack UUC**, page to the B-PNC carrier and remove all of the circuit packs there. Remove all circuit packs in the other B-PNC switch node carriers.

   If the Expansion Interface circuit pack associated with the PPN is located in the switch node carrier closest to the SPE, it cannot be removed from translation until it has been busied-out and disconnected from the carrier slot.

   When SNI, SNC, or DS1C circuit packs are removed from a B-PNC carrier, any alarms against them should be resolved.
6. Remove the B-PNC switch node carriers. Use **change cabinet UUC** and enter **not-used** for B-PNC carriers.

   Any alarm against the carrier such as 01D SN-CONF should be resolved. The B-PNC carriers and associated circuit packs should not be alarmed.
7. Disable PNC duplication on the **change system-parameters customer-options** form by changing ‘‘PNC Duplication’’ to ‘‘no.’’

If an alarm exists against any Expansion Interface circuit pack connected to a B-PNC carrier, attempt to use **test board UUCSS long clear** to clear the alarm.

Alterations to PNC which involve only the *addition* of fiber connectivity can be done with PNC-DUP operational. Alterations requiring the *removal* of fiber connectivity must be done with PNC-DUP removed. PNC-DUP must be removed and translations should be saved before any hardware changes are made.

Steady State LEDs

The LEDs of PNC components in a stable duplicated system should appear as follows:

- The *active* EIs in the EPNs are functioning as archangels. Their LEDs flash in a pattern of 2 seconds on 200 milliseconds off.
- The EPN standby EIs yellow LEDs are off.
- The PPN active EI yellow LED is on solid.
- The PPN standby EI yellow LED is off.
- The SNIs on the active switch node(s) have yellow LEDs on solid.
- The SNIs on the standby switch node(s) have yellow LEDs off.
- Active DS1Cs yellow LEDs are on solid.
- Standby DS1Cs yellow LEDs are off.
- DS1C facility green LEDs are on if the corresponding facility is equipped.

PNC State of Health

PNC-DUP software monitors the health of the two PNCs as determined by their state of health (SOH) vectors, and initiates an interchange when the health of the active falls below that of the standby (unless prevented from doing so by a PNC lock, busyout, or antithrashing mechanism). Potentially service-disrupting faults

which occur in PNC components are reported to PNC-DUP and incorporated in the state of health for the affected PNC. The SOHs of both PNCs are displayed on the **status pnc** screen.

```
status pnc                                                    page 1 of 1

                            PORT NETWORK CONNECTIVITY


                                 Duplicated? yes
                           Software Locked? no
                            Standby Busied? no
                            Direct Connect? no
                         Standby Refreshed? yes
                      Interchange Disabled? no


               A-PNC                                  B-PNC

            Mode: active                            Mode: standby
 State of Health: functional            State of Health: functional
  Inter PN Index: 00.00.00.00.00         Inter PN Index: 00.00.00.00.00
  Inter SN Index: 00.00                  Inter SN Index: 00.00
    Major Alarms: 0                        Major Alarms: 0
    Minor Alarms: 0                        Minor Alarms: 0
  Warning Alarms: 0                       Warning Alarms: 0
    SN Locations: 01E                      SN Locations: 01D
```

Screen 9-1. Status PNC Screen with Standby PNC Fully In-Service

PNC State of Health Indexes

The Inter-PN and Inter-SN Indexes form the state of health vector, which is used to track and compare the states of health of both PNCs. The fields making up the indexes are two digit numbers separated by periods (.), with each field representing a different class of faults. The fault class fields are arranged in order of decreasing importance from left to right. In other words, each field in the index supersedes the following fields in determining which PNC is healthiest. A fault class drives an interchange only when all of the higher priority fault classes are equal. A zero entry indicates no faults in that class. Increasing numbers indicate increasingly higher numbers of faults present in that class.

The Inter-PN Index contains five fields (XX.XX.XX.XX.XX), and the Inter-SN Index has two (XX.XX). The Inter-PN Index reports faults in connectivity between port networks and supersedes the Inter-SN Index, which reports faults in connectivity between switch nodes. (The Inter-SN Index is only meaningful for systems with a center stage switch having 2 switch nodes, each of which is duplicated).

The meaning of each fault class field is given in the following table. A zero entry indicates that there are no such faults reported. Higher numbers indicate increasing number of faults. All zeros indicates perfect state of health. Unless the PNCs are locked, the active PNC's state of health should always be equal to or

better than the standby's. (Otherwise, the system would perform a spontaneous interchange.)

After a PNC-related alarm is cleared, the system performs a partial refresh of the standby PNC. The corresponding fault class field is not updated to reflect the improved state of health until the refresh is done. The state of health indexes will not agree with the current alarm status during this period.

Inter SN Index: FC_SNIL s11.s10 FC_SNIHW

PNC State of Health Fault Classes

Fault Class	Priority	Description	MOs
FC_EAL	1	Number of PNs with EALs down	EXP-PN
FC_INL	2	Number of PNs with LINL, RINL, or EI-SNI neighbor link faults	EXP-PN SN-CONF
FC_HW	3	Number of PNs affected by hardware faults in a link having an EI as an endpoint (Endpoints can be determined with **list fiber-link**.)	EXP-INTF SN-CONF FIBER-LK SNI-BD DS1C-BD
FC_PER	4	Number of PNs affected by SNI peer link faults for SNIs connected to EIs	SNI-PEER
FC_DS1	5	Number of PNs affected by DS1C facility faults	DS1FAC
FC_ SNIL	6	Number of inter-switch-node fibers affected by peer or neighbor link faults	SNI-PEER
FC_ SNIHW	7	Number of inter-switch-node fibers affected by hardware faults	SN-CONF SNI-BD FIBER-LK

In multinode CSS configurations FC_DS1 is considered less critical that FC_ SNINL since DS1C constraints affect only one EPN and indicate restricted bandwidth. However FC_SNINL can indicate problems for all EPNs on the far end switch node (the one downlink from the PPN) If the DS1C problem is critical (for example, loss of all bandwidth to the affected EPN) a constraint with a higher order fault class will be reported to PNC DUP.

Resolving Poor State of Health

When the SOHs for both PNCs are not all zeros (perfect health), use the following steps to identify and repair the problem.

1. Look for PNC component alarms (major or minor) for the PNC side whose SOH is not all zero. The standby PNC should be repaired first.
2. Busy-out the standby PNC.
3. Follow the appropriate diagnostic and repair procedures for the alarmed PNC components just as with a simplex PNC. Both the alarm and error logs should be examined to isolate the fault.
4. Verify that the related PNC SOH is restored to all zeros.
5. Release the standby PNC for busy-out.

Refresh and Unrefresh of the Standby PNC

In a fully functional PNC with healthy standby and active sides, the standby PNC has a complete set of call connections corresponding to those in the active PNC. If, however, the state of health of the standby PNC degrades, a selective unrefresh of those connections which utilize the faulted component(s) is performed. If the health of the standby PNC improves, a selective refresh of connections on the affected route is performed. so that call setup is consistent between the active PNC and the healthy parts of the standby PNC.

The `Standby Refreshed?` field on the **status pnc** screen does *not* refer to the selective type of refresh. It refers only to a global refresh which is performed when:

- The system is initialized and PNC duplication is enabled.
- There has been a spontaneous PNC interchange.
- The standby PNC has been released from busy-out.
- A system reset of level 2 or higher has taken place.

The refreshed field may display `yes` when in fact the standby is partially unrefreshed. An interchange into an incompletely refreshed standby will result in dropped calls. This can happen when a more severe fault occurs on the active PNC, or when **set pnc interchange** is used with the override option.

PNC Interchanges

PNC spontaneous interchanges occur when PNC duplication software determines that the SOH of the standby PNC is better than that of the active PNC. PNC-DUP executes a spontaneous interchange only when a message from a PNC component maintenance object sends a message indicating that either a

fault has occurred on the active PNC, or a fault has been resolved on the standby PNC such that the state of health of the active PNC is now lower than that of the standby.

This message will usually indicate the type and location of the failed connectivity component. A corresponding major or minor alarm is logged by the reporting MO, stimulating an alarm report.

In the less common situation when the resolution of a fault on the standby renders it more healthy than a simultaneously faulted active PNC, the message will indicate the type and location of the *improved* component.

Once the interchange completes, the failed component will be on the standby PNC. A demand interchange can be requested in the presence or absence of standby PNC faults. The following sequence of actions can be observed during a fault-free interchange:

1. The Expansion Interfaces currently acting as archangels in the EPNs are deactivated as indicated by the yellow LEDs going from flashing to on solid.
2. The PPN EIs are interchanged as indicated by the new standby EI yellow LED off and the new active EI yellow LED on solid.
3. One by one the EPN EIs are interchanged as indicated by new standby EI yellow LED turning off and the new active EI yellow LED flashing (2 seconds on, 200 milliseconds off). At this point the interchange is functionally complete.
4. The SNIs yellow LEDs are updated. so that the SNIs on the active SN have yellow LEDs on, while the standby SN's SNIs yellow LEDs turn off.

Certain conditions may interfere with the normal execution of the interchange:

1. In a faulted spontaneous interchange it is possible the EPN/EPNs directly affected by the fault will be the last to interchange.
2. A user directly affected by the single fault instigating a PNC interchange can experience a momentary outage of voice path connectivity during the switch.
3. If faults exist on both the standby and active PNC, it is possible to have some EPNs go out of service while others are returned to service.
4. The new standby SNIs yellow LED my not be off due to a fault in the line of communication path to the standby SNIs. In a multi-fault interchange, LEDs on the new active SNIs may not be on for the same reason.

In any multifault situation, rely on **status pnc** to determine which is the active PNC.

PNC duplication informs Timing Synchronization maintenance when a PNC interchange has been completed and indicates which PNC is active. This will cause Synchronization to audit and insure that the primary source for

synchronization of Tone-Clocks in each PN is supplied by a path associated with the active PNC.

Antithrashing and PNC Interchanges

Following a spontaneous PNC interchange, subsequent PNC interchanges are prevented for 5 minutes. This condition is indicated by a "yes" in the Interchange Disabled? field of the status pnc screen. After 5 minutes, the antithrashing, timer expires, interchange decisions are re-enabled, and the field displays ‘‘no.’’ *Should a catastrophic failure occur on the active PNC during the period when "Interchange Disabled?" is set to "yes" there will be no spontaneous PNC interchange.* Demand PNC interchanges also invoke anti-thrashing, but only for a period of 30 seconds. During antithrashing mode, demand interchanges are also prevented unless the override option is specified. Use of this option will cause a service disruption.

Repairs on the Standby PNC Components

CAUTION:

If there is a TDM-CLK alarm, system timing may be routed through part of the standby PNC, and circuit switched data may be affected by the following repair procedures. This can happen, for example, when a slave tone/clock circuit pack experiences a loss of signal and switches to receive timing from the standby EI. In this case TDM-CLK 2305 error will be logged, and the clock problem should be addressed first, if possible.

To repair PNC components in a duplicated PNC proceed as follows:

1. Most repairs will involve fixing a single fault on the standby PNC. Use **set pnc lock** or **busy-out pnc** to prevent an interchange into the PNC being repaired.
2. If a faulty component exists on the currently active PNC, the standby PNC is more severely faulted. Normally the standby PNC will be fully repaired first since it is the most severely impaired. To repair the active PNC, request an interchange via the **reset pnc interchange override-and-lock** command. The *override-and-lock* option ensures that no subsequent interchange will occur during the repair of the standby PNC. The demand interchange may not be necessary if the following conditions drive a spontaneous interchange:
   - The anti-thrashing period from the last interchange has expired.
   - The global refresh from releasing the standby PNC has completed.

   The standby PNC SOH is better than the active.

3. At this point, the faulty component will be on the standby PNC, and the PNCs are locked in their current active/standby state. Busy-out the PNC. Then fault isolation and component testing procedures for the individual PNC components can be used just as for a simplex PNC. Replacement of components will not disrupt operation of the active PNC.
4. Once the failed component has been replaced, the standby PNC component may be tested from the management terminal to ensure the replacement is functioning properly.
5. When confident that the problem has been resolved, as indicated by a state of health with all zeros, (**status pnc**), unlock and release the pnc. Note that no further PNC interchange is required since you can test the standby PNC as thoroughly as the active.

Interactions: SPE Resets and PNC Interchanges

- After a system reset 4 (reboot), the A PNC is always the active.
- A system reset of level 1 (warm), 2 (cold2) or 3 (cold1) does not change which PNC is active. If a PNC interchange was in progress when the reset took place, the PNC interchange still goes to completion.
- If a system reset level 1 (warm) takes place during a PNC interchange, the reset is escalated to level 2 (cold2).

Fault Isolation Using Duplicated PNC

PNC duplication, can, in some cases aid in the isolation of faults. PNC interchanges can be used to help indict the faulty hardware. Following are two examples demonstrating this technique.

- There is a fault which can occur in either the PPN EI or the PKT-INT which cannot be readily attributed to one board or the other. If the packet bus transceivers on either the PKT-INT or EI fail, it will be apparent that the two boards cannot communicate, but it will not be clear which board is at fault. In this case a planned interchange of the PNC can be used to indict one of the two boards. If the interchange cures the problem, the EI was at fault. If the interchange does not cure the problem, the PKT-INT is suspect, provided there are no PKT-BUS faults.
- A similar relationship exists for the EPN Archangel (active EI) and certain TDM bus problems. If the EAA is unable to communicate with a port board over the TDM bus, either the EAA has a fault, the port board has a fault, or there is a problem with the TDM bus itself. If TDM bus maintenance tests find no problems with the bus, then it is either the port board or the EAA. It may be simpler to replace the port board than to request a PNC interchange. However, if it is not clear which port board may be at fault, or maintenance is being performed remotely, it might be useful to verify that the EAA is not at fault by executing a PNC interchange. If the interchange solves the problem, then the EAA is faulty. If the problem persists after the interchange, but TDM bus maintenance finds no problem, then the port board is faulty.

Error Log Entries

Whenever a PNC interchange takes place, an error is logged against PNC-DUP with a code that conveys information about the cause of the interchange and which PNC became active. There are no alarms associated with PNC-DUP errors, but there should be an alarm against the PNC component that drove the interchange. There are no PNC-DUP test sequences, but **status pnc** will provide information regarding the status of the PNCs. The information given in Table 9-297 will help to identify areas of the Alarm Log to be investigated to find the source the problem.

Table 9-297. PNC-DUP Error Log Entries

Error Code	Aux Data		Error Code	Aux Data
00000 (a)	None		20200 to 20221 (r)	*
10000 to 10021 (b)	*		20300 to 20321 (s)	*
10100 to 10121 (c)	*		20400 to 20421 (t)	*
10200 to 10221 (d)	*		20601 to 20627 (u)	*
10300 to 10321 (e)	*		20701 to 20727 (v)	*
10400 to 10421 (f)	*		21000 to 21021 (w)	*
10601 to 10627 (g)	*		21100 to 21121 (x)	*
10701 to 10727 (h)	*		21200 to 21221 (y)	*
11000 to 11021 (i)	*		21300 to 21321 (z)	*
11100 to 11121 (j)	*		21400 to 21421 (aa)	*
11200 to 11221 (k)	*		21601 to 21627 (ab)	*
11300 to 11321 (l)	*		21701 to 21727 (ac)	*
11400 to 11421 (m)	*		51000 (ad)	*
11601 to 11627 (n)	*		52000 (ae)	*
11701 to 11727 (o)	*		53000 (af)	*
20000 to 20021 (p)	*		60801 (ag)	*
20100 to 20121 (q)	*		60800 (ah)	*

* The Aux Data indicates which PNC became active after the PNC interchange: ‘‘0’’ denotes PNC-A; ‘‘1’’ denotes PNC-B.

Notes:

a. An error took place in generating the error code.

b. A spontaneous PNC interchange took place in response to the retiring of an alarm on the A-PNC associated with fault class FC_EAL. Use **status pnc** to look at the state of health indexes for the PNCs, and investigate any associated alarms. Adding 1 to the last two digits of the error code gives the PN number of the port network that reported the retired alarm. (10003 points to port network 4) **List config port-network** gives the cabinet number associated with a port network.

c. A spontaneous PNC interchange took place in response to the retiring of an alarm on the A-PNC associated with fault class FC_INL. Use **status pnc** to look at the state of health indexes for the PNCs, and investigate any associated alarms. Adding 1 to the last two digits of the error code gives the PN number of the port network that reported the retired alarm. (10003 points to port network 4) **List config port-network** gives the cabinet number associated with a port network.

d. A spontaneous PNC interchange took place in response to the retiring of an alarm on the A-PNC associated with fault class FC_HW. Use **status pnc** to look at the state of health indexes for the PNCs, and investigate any associated alarms. Adding 1 to the last two digits of the error code gives the PN number of the port network that reported the retired alarm. (10203 points to port network 4.) **List config port-network** gives the cabinet number associated with a port network.

e. A spontaneous PNC interchange took place in response to the retiring of an alarm on the A-PNC associated with fault class FC_PER. Use **status pnc** to look at the state of health indexes for the PNCs, and investigate any associated alarms. Adding 1 to the last two digits of the error code gives the PN number of the port network that reported the retired alarm. (10303 points to port network 4.) **List config port-network** gives the cabinet number associated with a port network.

f. A spontaneous PNC interchange took place in response to the retiring of an alarm on the A-PNC associated with fault class FC_DS1. Use **status pnc** to look at the state of health indexes for the PNCs, and investigate any associated alarms. Adding 1 to the last two digits of the error code gives the PN number of the port network that reported the retired alarm. (10403 points to port network 4.) **List config port-network** gives the cabinet number associated with a port network.

g. A spontaneous PNC interchange took place in response to the retiring of an alarm on the A-PNC associated with fault class FC_SNIL. Use **status pnc** to look at the state of health indexes for the PNCs, and investigate any associated alarms. The last two digits of the error code indicate the fiber-link number (01-27) of the fiber that reported the retired alarm. **List fiber-link** gives the location of the fiber.

h. A spontaneous PNC interchange took place in response to the retiring of an alarm on the A-PNC associated with fault class FC_SNIHW. Use **status pnc** to look at the state of health indexes for the PNCs, and investigate any

associated alarms. The last two digits of the error code indicate the fiber-link number (01-27) of the fiber that reported the retired alarm. **List fiber-link** gives the location of the fiber.

i. A spontaneous PNC interchange took place in response to the occurrence of a major or minor alarm on the A-PNC associated with fault class FC_ EAL. This indicates that one or more Expansion Archangel Links are down. Investigate any EXP-PN alarms. Adding 1 to the last two digits of the error code gives the PN number of the port network that reported the alarm. (11003 points to port network 4.) **List config port-network** gives the cabinet number associated with a port network.

j. A spontaneous PNC interchange took place in response to the occurrence of a major or minor alarm on the A-PNC associated with fault class FC_ INL. This indicates that one or more neighbor or indirect neighbor links with an EI as an endpoint have experienced faults. Investigate any alarms against EXP-PN and SN-CONF. Adding 1 to the last two digits of the error code gives the PN number of the port network that reported the alarm. (11103 points to port network 4.) **List config port-network** gives the cabinet number associated with a port network.

k. A spontaneous PNC interchange took place in response to the occurrence of a major or minor alarm on the A-PNC associated with fault class FC_ HW. This indicates that one or more neighbor or indirect neighbor links with an EI as an endpoint have experienced faults. Investigate any alarms against EXP-PN and SN-CONF. Adding 1 to the last two digits of the error code gives the PN number of the port network that reported the alarm. (11203 points to port network 4.) **List config port-network** gives the cabinet number associated with a port network.

l. A spontaneous PNC interchange took place in response to the occurrence of a major or minor alarm on the A-PNC associated with fault class FC_ PER. This indicates one or more faults on peer links that connect SNIs to EIs. Investigate any alarms against SNI-PEER. Adding 1 to the last two digits of the error code gives the PN number of the port network that reported the alarm. (11303 points to port network 4.) **List config port-network** gives the cabinet number associated with a port network.

m. A spontaneous PNC interchange took place in response to the occurrence of a major or minor alarm on the A-PNC associated with fault class FC_ DS1. This indicates faults on one or more DS1C facilities. Investigate any alarms against DS1-FAC. Adding 1 to the last two digits of the error code gives the PN number of the port network that reported the alarm. (11403 points to port network 4.) **List config port-network** gives the cabinet number associated with a port network.

n. A spontaneous PNC interchange took place in response to the occurrence of a major or minor alarm on the A-PNC associated with fault class FC_ SNIL. This indicates one or more faults on peer or neighbor links between SNIs on different switch nodes. Investigate any alarms against SNI-PEER. The last two digits of the error code indicate the fiber-link number (01-27) of the fiber that reported the retired alarm. **List fiber-link** gives the location of the fiber.

o. A spontaneous PNC interchange took place in response to the occurrence of a major or minor alarm on the A-PNC associated with fault class FC_SNIHW. This indicates one or more faults on hardware connecting SNIs on different switch nodes. Investigate any alarms against SN-CONF, SNI-BD, FIBER-LK. The last two digits of the error code indicate the fiber-link number (01-27) of the fiber that reported the retired alarm. **List fiber-link** gives the location of the fiber.

p. A spontaneous PNC interchange took place in response to the retiring of an alarm on the B-PNC associated with fault class FC_EAL. Use **status pnc** to look at the state of health indexes for the PNCs, and investigate any associated alarms. Adding 1 to the last two digits of the error code gives the PN number of the port network that reported the retired alarm. (20003 points to port network 4.) **List config port-network** gives the cabinet number associated with a port network.

q. A spontaneous PNC interchange took place in response to the retiring of an alarm on the B-PNC associated with fault class FC_INL. Use **status pnc** to look at the state of health indexes for the PNCs, and investigate any associated alarms. Adding 1 to the last two digits of the error code gives the PN number of the port network that reported the retired alarm. (20103 points to port network 4.) **List config port-network** gives the cabinet number associated with a port network.

r. A spontaneous PNC interchange took place in response to the retiring of an alarm on the B-PNC associated with fault class FC_HW. Use **status pnc** to look at the state of health indexes for the PNCs, and investigate any associated alarms. Adding 1 to the last two digits of the error code gives the PN number of the port network that reported the retired alarm. (20203 points to port network 4.) **List config port-network** gives the cabinet number associated with a port network.

s. A spontaneous PNC interchange took place in response to the retiring of an alarm on the B-PNC associated with fault class FC_PER. Use **status pnc** to look at the state of health indexes for the PNCs, and investigate any associated alarms. Adding 1 to the last two digits of the error code gives the PN number of the port network that reported the retired alarm. (20303 points to port network 4.) **List config port-network** gives the cabinet number associated with a port network.

t. A spontaneous PNC interchange took place in response to the retiring of an alarm on the B-PNC associated with fault class FC_DS1. Use **status pnc** to look at the state of health indexes for the PNCs, and investigate any associated alarms. Adding 1 to the last two digits of the error code gives the PN number of the port network that reported the retired alarm. (20403 points to port network 4.) **List config port-network** gives the cabinet number associated with a port network.

u. A spontaneous PNC interchange took place in response to the retiring of an alarm on the B-PNC associated with fault class FC_SNIL. Use **status pnc** to look at the state of health indexes for the PNCs, and investigate any

associated alarms. The last two digits of the error code indicate the fiber-link number (01-27) of the fiber that reported the retired alarm. **List fiber-link** gives the location of the fiber.

v. A spontaneous PNC interchange took place in response to the retiring of an alarm on the B-PNC associated with fault class FC_SNIHW. Use **status pnc** to look at the state of health indexes for the PNCs, and investigate any associated alarms. The last two digits of the error code indicate the fiber-link number (01-27) of the fiber that reported the retired alarm. **List fiber-link** gives the location of the fiber.

w. A spontaneous PNC interchange took place in response to the occurrence of a major or minor alarm on the B-PNC associated with fault class FC_EAL. This indicates that one or more Expansion Archangel Links are down. Investigate any EXP-PN alarms. Adding 1 to the last two digits of the error code gives the PN number of the port network that reported the alarm. (21003 points to port network 4.) **List config port-network** gives the cabinet number associated with a port network.

x. A spontaneous PNC interchange took place in response to the occurrence of a major or minor alarm on the B-PNC associated with fault class FC_INL. This indicates that one or more neighbor or indirect neighbor links with an EI as an endpoint have experienced faults. Investigate any alarms against EXP-PN and SN-CONF. Adding 1 to the last two digits of the error code gives the PN number of the port network that reported the alarm. (21103 points to port network 4.) **List config port-network** gives the cabinet number associated with a port network.

y. A spontaneous PNC interchange took place in response to the occurrence of a major or minor alarm on the B-PNC associated with fault class FC_HW. This indicates that one or more neighbor or indirect neighbor links with an EI as an endpoint have experienced faults. Investigate any alarms against EXP-PN and SN-CONF. Adding 1 to the last two digits of the error code gives the PN number of the port network that reported the alarm. (21203 points to port network 4.) **List config port-network** gives the cabinet number associated with a port network.

z. A spontaneous PNC interchange took place in response to the occurrence of a major or minor alarm on the B-PNC associated with fault class FC_PER. This indicates one or more faults on peer links that connect SNIs to EIs. Investigate any alarms against SNI-PEER. Adding 1 to the last two digits of the error code gives the PN number of the port network that reported the alarm. (21303 points to port network 4.) **List config port-network** gives the cabinet number associated with a port network.

aa. A spontaneous PNC interchange took place in response to the occurrence of a major or minor alarm on the B-PNC associated with fault class FC_DS1. This indicates faults on one or more DS1C facilities. Investigate any alarms against DS1-FAC. Adding 1 to the last two digits of the error code gives the PN number of the port network that reported the alarm. (21403 points to port network 4.) **List config port-network** gives the cabinet number associated with a port network.

ab. A spontaneous PNC interchange took place in response to the occurrence of a major or minor alarm on the B-PNC associated with fault class FC_ SNIL. This indicates one or more faults on peer or neighbor links between SNIs on different switch nodes. Investigate any alarms against SNI-PEER. The last two digits of the error code indicate the fiber-link number (01-27) of the fiber that reported the alarm. **List fiber-link** gives the location of the fiber.

ac. A spontaneous PNC interchange took place in response to the occurrence of a major or minor alarm on the B-PNC associated with fault class FC_ SNIHW. This indicates one or more faults on hardware connecting SNIs on different switch nodes. Investigate any alarms against SN-CONF, SNI-BD, FIBER-LK. The last two digits of the error code indicate the fiber-link number (01-27) of the fiber that reported the alarm. **List fiber-link** gives the location of the fiber.

ad. A spontaneous PNC interchange took place upon the expiration of the anti-thrashing timer.

ae. A spontaneous PNC interchange took place upon the unlocking of the PNCs with the **set pnc unlock** command.

af. A spontaneous PNC interchange took place upon the completion of a global refresh of the standby.

ag. A demand interchange was executed with the **reset pnc interchange**command.

ah. A demand interchange was executed with the **reset pnc interchange**command using the **override-and-lock** option.

POWER (Battery & Battery Charger) for AC-Powered Systems

MO Name As It Appears in Alarm Log	Alarm Level	Initial System Technician Command to Run (a)	Full Name of MO
POWER	MINOR	test environment *UU*	Battery & Battery Charger

a. *UU* is the cabinet number indicated in the PORT field from the Alarm or Error Log.

DEFINITY Generic 3r systems support two different cabinet types: multicarrier and single carrier. Single carrier cabinets are used only for EPNs. Both cabinet types may be powered by either AC or DC external power source. Environmental maintenance differs according to cabinet type and external power supply. Refer to the following table to determine which maintenance object documentation to use for environmental maintenance.

Cabinet Type	Power Source	Environmental Maintenance Objects
Single carrier (EPN)	AC or DC	DC-POWER (all environmental maintenance)
Multicarrier	AC	AC-POWER for AC-powered systems (external power source) POWER for AC-powered systems (battery backup) CARR-POW (carrier port power supply) CABINET (temperature and fan sensors)
Multicarrier	DC	CARR-POW (carrier port power supply) CABINET (temperature and fan sensors)

AC-powered multicarrier cabinets can be equipped with rechargeable batteries that provide backup power during short power outages. Battery backup is optional on cabinets powered by an AT&T Uninterruptible Power Supply (UPS), and is required on those that are not. DC-powered cabinets and single carrier cabinets do not have battery backup, and this maintenance object is not valid for those cabinets.

The battery backup unit consists of three 48V batteries and a battery charger. Each cabinet so equipped has its own independent battery backup unit. When power to the cabinet is interrupted, a warning alarm is logged against AC-POWER and the system draws power from the backup batteries. This is known as Nominal Power Holdover (NPH). If power is restored before the NPH time expires, the alarm is resolved. If power does not return, error logs are saved to the Mass Storage System. The nominal power holdover provided is as follows:

PPN Cabinet:

All carriers	10 seconds
Simplex control carrier	10 minutes
Duplicated control carriers	5 minutes

EPN cabinet:

All carriers	15 seconds
Expansion control carrier	10 minutes

System software controls the time period of NPH in the PPN to prevent damage to the batteries. The EPN maintenance circuit pack controls the time period in an EPN. When AC power is restored after an outage, the battery charger fully recharges the batteries within 30 hours.

In a multicarrier cabinet system, the Battery & Battery Charger maintenance object represents the battery charger and the battery which are located in the lower left corner of the cabinet. Should anything go wrong with the battery or charger, they must be replaced using the procedure described in the “Replacing the Battery and Battery Charger’’ section below. The system will detect one of the following three problems with the batteries or charger:

- Reserve Fault: the charger has detected a problem within itself or the batteries and has notified the system.
- High Charge Rate: the batteries have been charging at a high charge rate for an excessively long period of time. This indicates that there is a short in the batteries or the charger.
- Prepare to Disconnect (Low Battery): the batteries are in danger of being drained to a point where the batteries would be damaged. This warning often occurs after multiple power failures.

  The batteries take 30 hours to fully charge after being drained. A fully charged battery pack should bridge two power failures without causing a low battery warning to occur.

Replacing the Battery and Battery Charger

Use the procedure below to replace the Battery and Battery Charger:

1. Move the power switch on the battery charger to OFF.

   WARNING:
   Always turn off the battery charger before replacing the batteries. Failure to do so will result in damage to the 397B battery charger.

2. Disconnect the cord from the outlet on the front of the battery charger.
3. Remove the screw at the top left of the cover and open the cover to access the charger.
4. Check the battery voltages at the test points. They should be 48 volts or higher.

   NOTE:
   An ordinary voltmeter can be used to check battery voltages at the test points, but it may not produce valid results. If the battery voltage readings are below 48 volts, the battery is probably defective. However, a normal voltage reading does not necessarily mean the battery is good; under load, a defective battery with a normal reading on the voltmeter may discharge rapidly.

5. Check the battery dates and the preventive maintenance log. Replace the batteries if they are more than 2 1/2-years-old.

   NOTE:
   If any defective batteries are found, replace all of them. Batteries are ordered in sets of three and should be replaced as such.

6. If no defective batteries are found, replace the entire charger.
7. Close the cover and secure it with the screw.
8. Reconnect the cord and move the power switch to ON.

Hardware Error Log Entries and Test to Clear Values

Battery & Battery Charger Error Log Entries

Error Type	Aux Data	Associated Test	Alarm Level	On/Off Board	Test to Clear Value
0*	0	Any	Any	Any	test environment *UU* sh r 1
1	Any	Battery & Battery Charger Query Test (#5) (error code 8)	MINOR	ON	test environment *UU* s r 1
257	Any	Battery & Battery Charger Query Test (#5) (error code 4	MINOR	ON	test environment *UU* s r 1
769	Any	Battery & Battery Charger Query Test (#5) (error code 2)	MINOR	ON	test environment *UU* s r 1
3840(a)	1005 or 1028	Assoc. Battery & Battery Charger Query Test (#5)			test environment *UU* s r 1

* Run the Short Test Sequence first. If all tests pass, run the Long Test Sequence. Refer to the appropriate test description and follow the recommended procedures.

Note:

a. Check to see if the battery charger is connected. If the cabinet is powered by a UPS, and therefore does not have battery backup, this error can be ignored.

System Technician-Demanded Tests: Descriptions and Error Codes

Always investigate tests in the order presented in the table below when inspecting errors in the system. By clearing error codes associated with the *Battery & Battery Charger Query Test,* for example, you may also clear errors generated from other tests in the testing sequence.

Order of Investigation	Short Test Sequence	Long Test Sequence	D/ND*
Battery & Battery Charger Query Test (#5)	X	X	ND
AC Power Query Test (#78) (a)	X	X	ND
Power Unit Query Test (carrier E) (#127) (b)	X	X	ND
Power Unit Query Test (carrier D) (#127) (b)	X	X	ND
Power Unit Query Test (carrier A) (#127) (b)	X	X	ND
Power Unit Query Test (carrier B) (#127) (b)	X	X	ND
Power Unit Query Test (carrier C) (#127) (b)	X	X	ND
Emergency Transfer Query Test (#124) (c)	X	X	ND
Cabinet Sensors Query Test (#122) (d)	X	X	ND
External Alarm Lead Query Test (#120) (e)	X	X	ND
Analog Ring Generator Initialization Test (#117) (f)	X	X	ND
Analog Ring Generator Query Test (#118) (f)	X	X	ND

* D = Destructive; ND = Nondestructive

Notes:

a. Refer to AC-POWER (AC Power) Maintenance documentation for a description of this test.

b. Refer to CARR-POW (Carrier Port Power Unit) Maintenance documentation for a description of this test.

c. Refer to EMG-XFER (Emergency Transfer) Maintenance documentation for a description of this test.

d. Refer to CABINET (Cabinet Sensors) Maintenance documentation for a description of this test.

e. Refer to EXT-DEV (External Alarm) Maintenance documentation for a description of this test.

f. Refer to RING-GEN (Analog Ring Generator) Maintenance documentation for a description of this test.

Battery & Battery Charger Query Test (#5)

This test queries the SYSAM in the PPN or the EPN Maintenance circuit pack in an EPN for the status of the battery pack and battery charger, and reports the result. During this test, the status LED on the battery charger is lit and extinguished if the status of the battery charger is reported as normal. This event is a result of checking that the battery charger is connected.

Table 9-298. TEST #5 Battery & Battery Charger Query Test

Error Code	Test Result	Description/ Recommendation
1000	ABORT	System resources required to run this test are not available. 1. Retry the command at 1-minute intervals a maximum of 5 times. 2. If the test continues to abort, escalate the problem.
1005	ABORT	The battery charger is not connected. If the system has a UPS, ignore this error since the batteries and charger are not required. 1. The batteries will probably need charging and may be drained if there were power outages. Reconnect the battery charger to allow the batteries to recharge. If test #5 is run before the batteries are completely charged, the test will fail. 2. Wait 24 hours and rerun the test.
2000	ABORT	Response to the test request was not received within the allowable time period. 1. Retry the command at 1-minute intervals a maximum of 5 time. 2. If the test continues to ABORT with error code 2000, check for system powering problems with the A carrier (PPN or EPN). Look for and resolve all AC-POWER and CARR-POW alarms in a multicarrier cabinet system. Then, repeat the test. 3. If the test continues to ABORT with a 2000 error code, check for and resolve all SYSAM errors in a PPN or MAINT (EPN Maintenance circuit pack) errors in an EPN. Then, repeat the test. 4. If the test continues to ABORT with a 2000 error code, then escalate the problem.

Continued on next page

Table 9-298. TEST #5 Battery & Battery Charger Query Test — *Continued*

Error Code	Test Result	Description/ Recommendation
2029 2319 2320 2500	ABORT	Internal System Error 1. Retry the command at 1-minute intervals a maximum of 5 times. 2. If the test continues to abort, escalate the problem.
2	FAIL	The system is in nominal power holdover, and the battery is currently so low that the system will disconnect power very shortly. 1. If power returns, then the port carriers in the PPN should power-up again. All the circuit packs should be reinserted, and the system should continue to operate normally. There will probably be a minor alarm against Battery & Battery Charger due to the fact that the batteries are recharging. 2. If power does not return, the system will shut down to prevent damage to the batteries. Restore power, and the system will reboot. *No manual intervention is required.* 3) Rerun the test. If the test still fails, then the SYSAM in a PPN or the EPN MAINT (Maintenance) circuit pack in an EPN could be reporting this condition incorrectly. Resolve all alarms on these MOs and rerun the test. There are failures that can occur on the SYSAM and EPN Maintenance circuit pack that *will not* be detected by their respective maintenance, but which will cause many, if not all, environment tests to fail. If many environment tests are failing, the suspect circuit pack, depending on the system configuration, should be replaced and the test rerun. If the test still fails, then follow normal escalation procedures.
4	FAIL	The battery is currently being charged. 1. After 30 hours, the battery should be fully charged, and this error should disappear.

Continued on next page

Table 9-298. TEST #5 Battery & Battery Charger Query Test — *Continued*

Error Code	Test Result	Description/ Recommendation
		2. If after 30 hours the battery is still in the high charge rate, an alarm will be raised. Display the Error Log with the **display errors** command and select the category ''environ'' to display only environment-related errors. Look for POWER errors of type 257. The *first occurrence* of this error indicates the time when the battery started charging. Use this time as the starting point to determine if the battery has been charging for 30 hours. If the battery has been charging for 30 hours, then replace the battery and battery charger. **CAUTION:** *Read the section, "Replacing the Battery and Battery Charger'' before proceeding. 3) Rerun the test. If the test still fails, then SYSAM in a PPN or the EPN MAINT (Maintenance) circuit pack in an EPN could be reporting this condition incorrectly. There are failures that can occur on the SYSAM and EPN Maintenance circuit pack that will not be detected by their respective maintenance, but which will cause many, if not all, environment tests to fail. If many environment tests are failing, the suspect circuit pack, depending on the system configuration, should be replaced and the test rerun. Resolve all alarms on these MOs, and rerun the test. If the test still fails, then escalate the problem.*
6	FAIL	This indicates that error codes 2 and 4 have occurred. Refer to these descriptions. Also, refer to the description for error code 14 for this test.

Continued on next page

Table 9-298. TEST #5 Battery & Battery Charger Query Test — *Continued*

Error Code	Test Result	Description/ Recommendation
8	FAIL	There is a reserve power fault. A problem exists with the battery charger or, less likely, the batteries. 1. Replace the battery charger and the battery. The fault should disappear. **WARNING:** *Always turn off the battery charger before replacing the batteries.* 2. Rerun the test. If the test still fails, then SYSAM in a PPN or the EPN MAINT (Maintenance) circuit pack in an EPN could be reporting this condition incorrectly. Resolve all alarms on these MOs and rerun the test. There are failures that can occur on the SYSAM and EPN Maintenance circuit pack that *will not* be detected by their respective maintenance, but which will cause many, if not all, environment tests to fail. If many environment tests are failing, the suspect circuit pack, depending on the system configuration, should be replaced and the test rerun. If the test still fails, then follow normal escalation procedures.
10	FAIL	Error codes 2 and 8 have occurred. Refer to these descriptions. Also, refer to the description for error code 14 for this test.
12	FAIL	Error codes 4 and 8 have occurred. Refer to these descriptions. Also, refer to the description for error code 14 for this test.

Continued on next page

Table 9-298. TEST #5 Battery & Battery Charger Query Test — *Continued*

Error Code	Test Result	Description/ Recommendation
14	FAIL	Error codes 2, 4, and 8 have occurred. Refer to these descriptions. **NOTE:** This could also indicate that the detection logic on the SYSAM or EPN MAINT (Maintenance) circuit pack is defective. Such an error will not be detected by the respective maintenance. If many environment tests are failing, replace the suspect circuit pack (depending on system configuration).
	PASS	The SYSAM in a PPN or the EPN Maintenance circuit pack in an EPN has reported that the status of Battery & Battery Charger is good.

POWER (Battery & Battery Charger) for DC-Powered Systems

MO Name As It Appears in Alarm Log	Alarm Level	Initial System Technician Command to Run (a)	Full Name of MO
POWER	MINOR	test environment *UU*	Battery & Battery Charger

a. *UU* is the cabinet number indicated in the PORT field from the Alarm or Error Log.

NOTE:
The POWER maintenance object represents the battery backup unit found in AC-powered multicarrier cabinets. Because the system does not recognize the type of external power provided, the POWER maintenance object exists in DC-Powered multicarrier cabinets but serves no functional purpose. In such cabinets, all POWER tests should always either pass or abort, and no POWER alarms should be raised.

DEFINITY Generic 3r systems support two different cabinet types: multicarrier and single carrier. Single carrier cabinets are used only for EPNs. Both cabinet types may be powered by either AC or DC external power source. Environmental maintenance differs according to cabinet type and external power supply. Refer to the following table to determine which maintenance object documentation to use for environmental maintenance.

Cabinet Type	Power Source	Environmental Maintenance Objects
Single carrier (EPN)	AC or DC	DC-POWER (all environmental maintenance)
Multicarrier	AC	AC-POWER for AC-powered systems (external power source) POWER for AC-powered systems (battery backup) CARR-POW (carrier port power supply) CABINET (temperature and fan sensors)
Multicarrier	DC	CARR-POW (carrier port power supply) CABINET (temperature and fan sensors)

Hardware Error Log Entries and Test to Clear Values

Battery & Battery Charger Error Log Entries

Error Type	Aux Data	Associated Test	Alarm Level	On/Off Board	Test to Clear Value
0*	0	Any	Any	Any	test environment UU sh r 1
1	Any	Battery & Battery Charger Query Test (#5) (error code 8)	MINOR	ON	test environment UU s r 1
257	Any	Battery & Battery Charge Query Test (#5) (error code 4)	MINOR	ON	test environment UU s r 1
769	Any	Battery & Battery Charger Query Test (#5) (error code 2)	MINOR	ON	test environment UU s r 1
3840(a)	1005 or 1028	Assoc. Battery & Battery Charger Query Test (#5)			test environment UU s r 1

* Run the Short Test Sequence first. If all tests pass, run the Long Test Sequence. Refer to the appropriate test description and follow the recommended procedures.

Note:

a. This error occurs is valid only for AC-powered multicarrier cabinets with battery backup. For DC-powered cabinets, you cannot clear the error and it should be ignored.

System Technician-Demanded Tests: Descriptions and Error Codes

Always investigate tests in the order presented in the table below when inspecting errors in the system. By clearing error codes associated with the *Battery & Battery Charger Query Test,* for example, you may also clear errors generated from other tests in the testing sequence.

Order of Investigation	Short Test Sequence	Long Test Sequence	D/ND*
Battery & Battery Charger Query Test (#5)	X	X	ND
AC Power Query Test (#78) (a)	X	X	ND
Power Unit Query Test (carrier E) (#127) (b)	X	X	ND
Power Unit Query Test (carrier D) (#127) (b)	X	X	ND
Power Unit Query Test (carrier A) (#127) (b)	X	X	ND
Power Unit Query Test (carrier B) (#127) (b)	X	X	ND
Power Unit Query Test (carrier C) (#127) (b)	X	X	ND
Emergency Transfer Query Test (#124) (c)	X	X	ND
Cabinet Sensors Query Test (#122) (d)	X	X	ND
External Alarm Lead Query Test (#120) (e)	X	X	ND
Analog Ring Generator Initialization Test (#117) (f)	X	X	ND
Analog Ring Generator Query Test (#118) (f)	X	X	ND

Notes:

a. Refer to AC-POWER (AC Power) section for a description of this test.

b. Refer to CARR-POW (Carrier Port Power Unit) for AC- and DC-Powered Systems section for a description of this test.

c. Refer to EMG-XFER (Emergency Transfer) section for a description of this test.

d. Refer to CABINET (Cabinet Sensors) section for a description of this test.

e. Refer to EXT-DEV (External Alarm) section for a description of this test.

f. Refer to RING-GEN (Analog Ring Generator) section for a description of this test.

Battery & Battery Charger Query Test (#5)

This test queries the SYSAM in the PPN or the EPN Maintenance circuit pack in an EPN for the status of the battery pack and battery charger, and reports the result. In a DC-Powered system, this test should never fail. During this test, the status LED on the battery charger is lit and extinguished if the status of the battery charger is reported as normal. This event is a result of checking that the battery charger is connected.

Table 9-299. TEST #5 Battery & Battery Charger Query Test

Error Code	Test Result	Description/ Recommendation
1000	ABORT	System resources required to run this test are not available.
1005	ABORT	Battery charger is not connected. DC-powered cabinets do not have battery backup; ignore this error.
2000	ABORT	Response to the test request was not received within the allowable time period.
2028	ABORT	Internal System Error prevented the extinguishing of the Battery Charger status LED. 1. Since this test is not relevant for DC-powered systems, an occurrence of this error indicates possible existence of internal system problems.
2029 2319 2320 2500	ABORT	Internal System Error 1. Try the command again at 1-minute intervals up to 5 times. 2. If the test continues to abort, escalate the problem.
any	FAIL	The SYSAM in a PPN or the EPN Maintenance circuit pack in an EPN is incorrectly reporting a problem with power. If this test fails for a DC-powered cabinet, the circuit pack has a problem. Replace the suspect circuit pack and run the test again. If the test still fails, then follow normal escalation procedures.
	PASS	All that can be inferred is that the SYSAM in a PPN or the EPN Maintenance circuit pack in an EPN in an EPN multicarrier cabinet system is working properly for this test.

PRI-CDR/SEC-CDR (Call Detail Recording Link)

MO Name As It Appears in Alarm Log	Alarm Level	Initial System Technician Command to Run	Full Name of MO
PRI-CDR/SEC-CDR	MINOR	test cdr primary/secondary l	CDR Link
PRI-CDR/SEC-CDR	WARNING	test cdr primary/secondary	CDR Link

The CDR feature records detailed call information on all incoming and outgoing calls on specified trunk groups and sends this information to a CDR output device. The two physical links can be administered for connecting external CDR output devices to the system. They are identified as the primary CDR (PRI-CDR) link and the secondary CDR (SEC-CDR) link. The CDR device connects to the system via a data module (PDM, MPDM, DTDM) connected to a port on a TN754 Digital Line circuit pack that is administered as a data extension. A CDR device can also be connected through an ADU to a port on TN726B. The CDR link to the processor is via a system port. A system port is comprised of a port on the TN726B Data Line circuit pack and a port on the TN553 Packet Data circuit pack connected to each other in a null-modem fashion. Refer to the PDATA-PT section for information on the system port connectivity. External CDR output devices include:

- 94A Local Storage Unit (LSU)
- TELESEER CDR Unit
- AT&T Call Accounting System (CAS)
- AT&T Call Detail Recording Unit (CDRU)
- Printer
- Host computer
- Personal computer (PC)
- Customer-provided equipment

Refer to *DEFINITY Communications System Generic 3 Feature Description,* 555-230-204, for details of the CDR feature.

CDR Link Maintenance provides a strategy for maintaining the link between the system and an external CDR output device. The strategy includes a set of tests for periodic diagnosis, detection of errors during normal operation, actions for troubleshooting, and raising alarms for serious problems. CDR Link Maintenance uses a try-and-wait mechanism for maintaining the CDR link. If the CDR link is torn down due to an error, CDR Link Maintenance tries to bring the CDR link up. If the Link Setup fails, CDR Link Maintenance will wait for 30 seconds

before the next retry. If the number of retries reaches a threshold (two), a Minor alarm is raised for service attention.

CDR Link Maintenance does not cover the maintenance of the elements composing the CDR physical link:

- External CDR output device
- Data Module (PDM/MPDM/DTDM) and Digital Line Port of TN754 Digital Line circuit pack
- ADU and Data Line Port of TN726B Data Line circuit pack

If CDR Link Maintenance cannot restore the CDR link, the maintenance tests of these individual components of the CDR link must be executed to diagnose faults.

Procedures for Restoring the CDR Link

1. Determine the status of CDR links.

   Enter **status cdr** command and make sure that the CDR links are not busied out for maintenance. If the link is down, then continue to the next step.

2. Where does the CDR link connect to?

   Enter **display system feature** and find out the destinations of CDR links. Continue to the next step.

3. Enter the **status data extension** command and verify whether the data extension is in the in-service/idle state. If the data extension is *not* available, then look for the extension number in the Alt Name field of the Hardware Error Log and refer to XXX-BD (Common Port Circuit Pack) Maintenance documentation for resolutions.

4. Is the external CDR output device available?

   Make sure that the CDR output device is on-line and ready for service. Check the physical connectivity between Data Module and the CDR output device.

5. If the problem is not found in the above steps, check the system port for any problems. Refer to the PDATA-PT section for for description about system port and its connectivity.

When restoring the CDR link it is necessary to execute maintenance test on different objects that comprise the CDR link. It is recommended that you busy out the CDR link before trying to restore the link. When the CDR Link is busied out, then all CDR Link maintenance actions are deactivated, and interference to tests of other MOs is prevented.

Hardware Error Log Entries and Test to Clear Values

CDR Link Maintenance Error Log Entries

Error Type	Aux Data	Associated Test	Alarm Level	On/Off Board	Test to Clear Value
0*	0	Any	Any	Any	test cdr primary|secondary sh
18(a)	0	busyout cdr primary|secondary	WARNING	OFF	release cdr primary|secondary
257(b)	Any	Link Retry Test (#215)	MINOR/† WARNING	OFF	test cdr primary|secondary l
513(c)					test cdr primary|secondary
1025(d)					
1281(e)	Any				

* Run the Short Test Sequence first. If all tests pass, run the Long Test Sequence. Refer to the appropriate test description and follow the recommended procedures.

† Minor alarms on this MO may be downgraded to Warning alarms based on the value used in the **set options** command.

Notes:

a. The CDR link is busied out. The CDR link is torn down.

b. Link Retry Test (#215) fails. An error was detected when setting up the link. Refer to the preceding section “Procedures for Restoring the CDR Link’’ for resolution.

c. The CDR physical link is down for one of the following reasons:

- Cable to the CDR output device is disconnected.
- CDR output device is powered off.
- The data extension where the CDR output device connects to has been busied out or there is a scheduled daily interchange.

Check the connectivity of wire and cable among wall jacket, data module, and the CDR output device. Enter **status data extension** and verify that the data extension of the CDR output device is in the in-service/idle state. If the data extension is not available, then refer to The preceding section “Procedures for Restoring the CDR Link’’ for resolution. Issue the **display**

system-parameters-maintenance command to see the start time of daily maintenance. If the error occurs and is resolved during of daily maintenance, it can be ignored.

d. This error indicates that the CDR output device is in an off-line state, (for example, due to paper jam or paper out for a printer device). The CDR link is torn down. Check the CDR output device and act promptly to put it back to on-line state. Enter **test cdr primary|secondary** command to set up the CDR link.

e. Software detects an overflow of CDR records generated in the switch due to the heavy trunk traffic and low speed CDR output device. If both primary and secondary links are ON, the secondary link is torn down temporarily for two minutes to speed up the output process to the primary link. No action is necessary for this error type.

System Technician-Demanded Tests: Descriptions and Error Codes

Always investigate tests in the order presented in the table below when inspecting errors in the system. By clearing error codes associated with the *Link Retry Test*, for example, you may also clear errors generated from other tests in the testing sequence.

Order of Investigation	Short Test Sequence	Long Test Sequence	D/ND*
Link Tear Down Test (#213)		X	D
Link Retry Test (#215)	X	X	ND

* D = Destructive; ND = Nondestructive

Link Tear Down Test (#213)

This test is destructive.

This test disconnects the existing link between the system and the external CDR output device. If the link has been disconnected already, this test just returns PASS. All resources allocated for a CDR link are released after this test.

Table 9-300. TEST #213 Link Tear Down Test

Error Code	Test Result	Description/ Recommendation
40	ABORT	Internal System Error.
50	ABORT	Internal System Error. 1. Retry the command at one-minute intervals for a maximum of 5 times. 2. If the test continues to abort, escalate the problem.
1010	ABORT	The CDR link has been busied out to out-of-service. 1. Enter the **release cdr primary|secondary** command to release the CDR link from busyout state. 2. Retry the **test cdr primary|secondary long** command to execute the test.
2012	ABORT	Internal System Error. 1. Retry the command at one-minute intervals a maximum of 5 times. 2. If the test continues to abort, escalate the problem.
	FAIL	Internal System Error. 1. Retry the command at one-minute intervals for a maximum of 5 times. 2. If the test continues to abort, escalate the problem.
	PASS	The CDR link is torn down.

Link Retry Test (#215)

This test sends a message to the CDR software process to make a data call to the extension where the CDR output device connects to. If the CDR link is already up, then this test will be passed without making any data call.

Table 9-301. TEST #215 Link Retry Test

Error Code	Test Result	Description/ Recommendation
10	ABORT	Internal System Error.
20	ABORT	Internal System Error. 1. Retry the command at one-minute intervals for a maximum of 5 times. 2. If the test continues to abort, escalate the problem.
30	ABORT	Internal System Error. 1. Refer to ‘‘Procedures for Restoring the CDR Link’’ for instructions.
1010	ABORT	The CDR link has been busied out to out-of-service. 1. Enter **release cdr primary|secondary** command to release the CDR link from busyout state. 2. Retry **test cdr primary|secondary long** command to execute the test.
2012	ABORT	Internal System Error. 1. Retry the command at one-minute intervals a maximum of 5 times. 2. If the test continues to abort, escalate the problem.
	FAIL	The CDR link CANNOT be established. 1. Refer to the ‘‘Procedures for Restoring the CDR Link’’ for instructions.
	PASS	The CDR link is up.

PROC-SAN (Process Sanity Audits)

MO Name As It Appears in Alarm Log	Alarm Level	Initial System Technician Command to Run	Full Name of MO
PROC-SAN	none	none	Process Sanity Audits

The Process Sanity Audits maintenance object is responsible for monitoring the sanity of software processes in the system. If the Process Sanity Audits MO detects that a process has gone insane (does not respond to a sanity message within an allotted time period), the process will be restarted. If the Process Sanity Audits MO detects that multiple processes (or a single key process) do not respond to sanity messages within an allotted time period, a system recovery action will be initiated.

The Process Sanity Audits MO has no alarms and no tests. Certain errors are logged to the Hardware Error Log for information purposes only.

Hardware Error Log Entries and Test to Clear Values

Process Sanity Audits Error Log Entries

Error Type	Aux Data	Associated Test	Alarm Level	On/Off Board	Test to Clear Value
0*	0	Any	Any	Any	none
10 (a)	0	none	none	none	none
204 (a)	any	none	none	none	none

Note:

a. These errors indicate that a system recovery action has been taken because one or more software processes failed to respond to a sanity audit in a timely fashion. As a result of the recovery action, the system may have temporarily suspended service for a period of time surrounding the error. If these errors persist, escalate the problem immediately.

PROCR (RISC Processor Circuit Pack)

MO Name As It Appears in Alarm Log	Alarm Level	Initial System Technician Command to Run (a)	Full Name of MO
PROCR	MAJOR(b)	test processor UUC l	RISC Processor Circuit Pack
PROCR	MINOR	test processor UUC s	RISC Processor Circuit Pack

a. UU is the cabinet number (always 1, not required). With simplex SPE, carrier designation is not required. With duplicated SPEs, carrier a or b must be specified.

b. After a spontaneous SPE interchange has occurred, the Alarm Log retains for three hours a record of any MAJOR ON-BOARD alarm against an SPE component that took place before the interchange. If a spontaneous interchange has occurred (as indicated by STBY-SPE error type 103 or the **display initcauses** screen), and handshake is down, (check with **status spe**), replace the alarmed circuit pack on the standby SPE. If handshake is up, execute a **test long clear** of the alarmed circuit pack and follow recommended procedures.

The UN331B Processor circuit pack executes the system software, including all call processing, maintenance and administration functions. The Processor circuit pack is the most critical component for correct system operation.

Full system operation depends on nearly every circuit pack in the SPE. However, the ability to load and run the maintenance software by the Processor circuit pack depends only on correct Memory, Processor Bus, Tape-Disk-MSSNET and SYSAM operation (see Figure 9-91 on the next page). The Memory contains all of the instructions and data required for software execution. The Processor Bus connects the Processor circuit pack and other components of the SPE together. The Tape-Disk-MSSNET complex provide the mass storage for program and translation data that is loaded into memory when the system is started up. SYSAM provides the user terminal access and remote alarm reporting functions needed for Processor circuit pack maintenance.

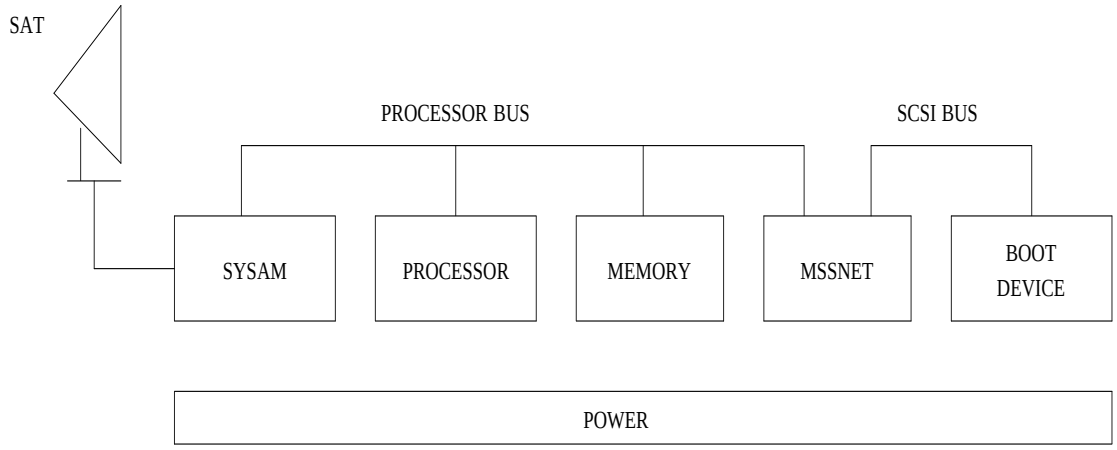

Figure 9-91. SPE Components Required for Maintenance Software Operation

There are many Processor circuit pack problems (or other SPE problems) that will result in the SPE being unable to load or run software. This condition is indicated by the message "SPE Down" displayed on the terminal. In these cases, refer to the SPE DOWN section of this manual for repair procedures.

The Processor circuit pack contains an instruction cache and a data cache. These caches provide local, high speed memory that is closely coupled with the processing function on the Processor circuit pack. The local nature of the caches speeds up system operation by eliminating many external Memory accesses when reading instructions or data. As the Processor runs, it tries to use information already in the cache so that time will not be wasted going out to memory. If it does not find the information in the cache, it reads it from memory and stores it in the cache for possible future use. Over time, most instruction or data accesses are likely to be satisfied by current information in the cache. Problems in the cache circuits may stop the Processor from running or may only result in reduced system performance.

The Processor circuit pack contains a Burst Read function that transfers multiple words of instructions from memory with each request. This is done to speed up the transfer of information from the Memory to the Processor, and is especially helpful for "filling up" the cache in parallel with internal processing on Processor circuit pack. Most of the circuitry needed to support this function is found on the Memory circuit packs, but part of this function is on the Processor as well. Refer to Memory documentation for test information.

The Processor circuit pack contains a Write Buffer function that helps prevent internal processing operations from being held up by Processor Bus activity. If the Processor needs to write to Memory, it writes to the Write Buffer. If the Processor Bus is in use at this time, the information is transferred to Memory at an appropriate time. Up to 12 processor writes can be pending, waiting for transfer to memory.

The Processor Bus contains parity checking functions. If one address or data bit is corrupted during an access cycle, the error detection logic detects and reports this to Processor circuit pack.

The Processor circuit pack contains interrupt and exception signals that tell the Processor when normal or erroneous events occur in SPE components. An example of a normal event is an interrupt that occurs when data provided by an SPE component such as the SYSAM is available for the Processor. An example of an error-indicating exception is detection of a parity error on the Bus when Processor reads Memory. These types of errors result in system recovery actions which are described in Chapter 4, "Initialization and Recovery".

The Processor circuit pack contains an erasable, programmable read-only memory (BOOTPROM) that contains the system initialization and low-level diagnostic programs. Problems in this hardware may result in difficulties with system start-up, restart, or SPE maintenance testing in general.

If the PBX system is equipped with High Reliability or Critical Reliability option (i.e. with duplicated SPEs), and if a failure of the active Processor circuit pack causes a MAJOR on-board alarm, a SPE interchange will occur if the health of the standby SPE permits the interchange. Refer to Replacing SPE Circuit Packs in Chapter 5, "Responding to Alarms and Errors" for more information about duplicated SPEs.

Hardware Error Log Entries and Test to Clear Values

PROCR Error Log Entries

Error Type	Aux Data	Associated Test	Alarm Level	On/Off Board	Test to Clear Value
0*	0	Any	Any	Any	test processor UUC s r 1
1		BOOTPROM Checksum Test (#897)	MAJOR†	ON	test processor UUC s r 1
150(a)	Any	None	MAJOR†	ON	test processor UUC l c
257		Parity Checker Test (#899)	MINOR	ON	test processor UUC s r 2
513		Write Buffer Test (#900)	MAJOR†	ON	test processor UUC s r 1
1025		Cache Audit (#896)	MINOR	ON	test processor UUC s r 2
1281		Cache Test (#895)	MAJOR†	ON	test processor UUC l r 1

* Run the Short Test Sequence first. If all tests pass, run the Long Test Sequence. Refer to the appropriate test description and follow the recommended procedures.

† If a sponteous interchange has occurred (as indicated by STBY-SPE error type 103 or the **display initcauses** screen), and handshake is down, (check with **status spe**), replace the alarmed circuit pack on the standby SPE. If handshake is up, execute a **test long clear** of the alarmed circuit pack and follow recommended procedures.

Note:

a. This error (150) indicates that a SPE interchange has occurred and that the Processor circuit pack was the cause of the spontaneous interchange.

   1. If other PROCR errors are present, investigate these errors.
   2. If no other PROCR errors are present, run the **test processor a|b long clear** command and investigate any test failures. If all tests pass, follow normal escalation procedures.

System Technician-Demanded Tests: Descriptions and Error Codes

Always investigate tests in the order presented in the table below when inspecting errors in the system. By clearing error codes associated with the *Processor Cache Test*, for example, you may also clear errors generated from other tests in the testing sequence.

Order of Investigation	Short Test Sequence	Long Test Sequence	Reset Board Sequence	D/ND*
Processor Cache Test (#895)		X		D
Processor Cache Audit (#896)	X	X		ND
Processor BOOTPROM Checksum Test (#897)	X	X		ND
Processor Parity Checker Test (#899)	X	X		ND
Processor Write Buffer Test (#900)	X	X		ND

* D = Destructive; ND = Nondestructive

Processor Cache Test (#895)

This test is destructive.

This test overwrites the contents in the Instruction and Data Caches, requiring them to be refilled during normal execution.

This test verifies that the Processor Instruction and Data Caches are functional. Some errors in the caches will cause the Processor to stop functioning, while others simply reduce performance by forcing instructions or data to be read from memory more often than would normally be necessary. In any case, cache problems are serious and the Processor circuit pack must be replaced as soon as possible if they are detected.

Table 9-302. TEST #895 Processor Cache Test

Error Code	Test Result	Description/ Recommendation
100	ABORT	The requested test did not complete within the allowable time period. 1. Retry the command. 2. If the test continues to abort, follow normal escalation procedures.
1022 1335 2500	ABORT	Internal System Error 1. Retry the command 2. If the test continues to abort, follow normal escalation procedures.
1338	ABORT	The test is not allowed to run since a planned SPE interchange is in progress. This may be caused by a planned interchange initiated automatically during 24 hour scheduled testing. 1. Wait 3 minutes and retry the command. 2. If the test continues to abort, follow normal escalation procedures.

Continued on next page

Table 9-302. TEST #895 Processor Cache Test — *Continued*

Error Code	Test Result	Description/ Recommendation
1339	ABORT	The test could not run on the standby Processor circuit pack in the standby SPE carrier because the standby SPE is unavailable. 1. Refer to the STBY-SPE maintenance documentation for information on why a standby SPE may be unavailable and what repair actions should be taken. The screen for the **status spe** command should indicate that handshake is down. This may be caused by a variety of reasons such as the SPE-SELECT switches on the DUPINT circuit packs being set to the position of the active SPE, a failure of the DUPINT circuit pack, or loss of power on the standby SPE. The *SPE Selected* field on the **status spe** screen will display *spe a* or *spe b* if both SPE-SELECT switches are in the a or b positions, respectively.
2000	ABORT	Response to the test request was not received within the allowable time period. If the system is equipped with the High Reliability or Critical Reliability Configuration and if the Processor circuit pack is on the standby SPE, this abort code may indicate that the standby SPE is not responding to the handshake message. If this is the case, the standby SPE maintenance software may take up to two minutes to indicate that handshake communication with the standby SPE is down. The ABORT code will then change to 1339 (standby SPE unavailable). 1. Retry the command at 1-minute intervals, a maximum of 3 times. 2. If the test continues to abort with this abort code, follow normal escalation procedures.
2334	ABORT	The hardware mail on the standby Duplication Interface board is not ready to receive messages. 1. Retry the command at 1-minute intervals, a maximum of 5 times. 2. If the test continues to abort with this abort code, follow normal escalation procedures.

Continued on next page

Table 9-302. TEST #895 Processor Cache Test — *Continued*

Error Code	Test Result	Description/ Recommendation
	FAIL	The Processor cache is not functioning correctly. 1. Replace the Processor circuit pack immediately. 2. If the test continues to fail after replacing the Processor circuit pack, follow normal escalation procedures. To replace the Processor circuit pack, refer to *Replacing SPE Circuit Packs* in Chapter 5, 'Responding to Alarms and Errors".
	PASS	The cache portion of the Processor circuit pack is operating correctly.

Processor Cache Parity Audit (#896)

This audit checks the state of the Cache Parity bit maintained by the R3000 CPU. If this bit is set, there may be problems with either the CPU, the Instruction, or Data Cache. An indication of bad cache parity won't itself mean that the system won't operate, but minor to severe performance degradation may be present. For example, a single bad bit in either cache could cause this bit to be set. If the faulty word is seldom accessed, the impact will be small. If the bit is accessed frequently, there could be serious problems with much, or all, of the cache (stuck data bit) with the only direct indication again being the cache parity error or cache test error.

Table 9-303. TEST #896 Processor Cache Parity Audit

Error Code	Test Result	Description/ Recommendation
100	ABORT	The requested test did not complete within the allowable time period. 1. Retry the command. 2. If the test continues to abort, follow normal escalation procedures.
1022 1335 2500	ABORT	Internal System Error 1. Retry the command. 2. If the test continues to abort, follow normal escalation procedures.
1338	ABORT	The test is not allowed to run since a planned SPE interchange is in progress. This may be caused by a planned interchange initiated automatically during 24 hour scheduled testing. 1. Wait 3 minutes and retry the command. 2. If the test continues to abort, follow normal escalation procedures.

Continued on next page

Table 9-303. TEST #896 Processor Cache Parity Audit — *Continued*

Error Code	Test Result	Description/ Recommendation
1339	ABORT	The test could not run on the standby Processor circuit pack in the standby SPE carrier because the standby SPE is unavailable. 1. Refer to the STBY-SPE maintenance documentation for information on why a standby SPE may be unavailable and what repair actions should be taken. The screen for the **status spe** command should indicate that handshake is down. This may be caused by a variety of reasons such as the SPE-SELECT switches on the DUPINT circuit packs being set to the position of the active SPE, a failure of the DUPINT circuit pack, or loss of power on the standby SPE. The *SPE Selected* field on the **status spe** screen will display *spe a* or *spe b* if both SPE-SELECT switches are in the a or b positions, respectively.
2000	ABORT	Response to the test request was not received within the allowable time period. If the system is equipped with the High Reliability or Critical Reliability Configuration and if the Processor circuit pack is on the standby SPE, this abort code may indicate that the standby SPE is not responding to the handshake message. If this is the case, the standby SPE maintenance software may take up to two minutes to indicate that handshake communication with the standby SPE is down. The ABORT code will then change to 1339 (standby SPE unavailable). 1. Retry the command at 1-minute intervals, a maximum of 3 times. 2. If the test continues to abort with this abort code, follow normal escalation procedures.
2334	ABORT	The hardware mail on the standby Duplication Interface board is not ready to receive messages. 1. Retry the command at 1-minute intervals, a maximum of 5 times. 2. If the test continues to abort with this abort code, follow normal escalation procedures.

Continued on next page

Table 9-303. TEST #896 Processor Cache Parity Audit — *Continued*

Error Code	Test Result	Description/ Recommendation
	FAIL	The Cache Parity Error bit is set, there may be problems with either the CPU or the Instruction or Data Cache. 1. Retry the command. 2. If the test continues to fail, run **test processor a|b long**. 3. If the Processor Cache test (#895) or the Processor Cache Parity Audit (#896) fails, replace the Processor circuit pack. 4. If the test continues to fail after replacing the Processor pack, follow normal escalation procedures. To replace the Processor circuit pack, refer to *Replacing SPE Circuit Packs* in Chapter 5, 'Responding to Alarms and Errors".
	PASS	The Processor has not detected any parity errors in the Instruction and Data Caches since the last time this audit was run.

Processor BOOTPROM Checksum Test (#897)

This test computes the checksum of the Processor's bootstrap BOOTPROM and compares it to a predetermined value stored within the BOOTPROM. A failure of this test indicates the BOOTPROM is corrupt.

Table 9-304. TEST #897 Processor BOOTPROM Checksum Test

Error Code	Test Result	Description/ Recommendation
100	ABORT	The requested test did not complete within the allowable time period. 1. Retry the command. 2. If the test continues to abort, follow normal escalation procedures.
1022 1335 2500	ABORT	Internal System Error 1. Retry the command. 2. If the test continues to abort, follow normal escalation procedures.
1338	ABORT	The test is not allowed to run since a planned SPE interchange is in progress. This may be caused by a planned interchange initiated automatically during 24 hour scheduled testing. 1. Wait 3 minutes and retry the command. 2. If the test continues to abort, follow normal escalation procedures.

Continued on next page

Table 9-304. TEST #897 Processor BOOTPROM Checksum Test — *Continued*

Error Code	Test Result	Description/ Recommendation
1339	ABORT	The test could not run on the standby Processor circuit pack in the standby SPE carrier because the standby SPE is unavailable. 1. Refer to the STBY-SPE maintenance documentation for information on why a standby SPE may be unavailable and what repair actions should be taken. The screen for the **status spe** command should indicate that handshake is down. This may be caused by a variety of reasons such as the SPE-SELECT switches on the DUPINT circuit packs being set to the position of the active SPE, a failure of the DUPINT circuit pack, or loss of power on the standby SPE. The *SPE Selected* field on the **status spe** screen will display *spe a* or *spe b* if both SPE-SELECT switches are in the a or b positions, respectively.
2000	ABORT	Response to the test request was not received within the allowable time period. If the system is equipped with the High Reliability or Critical Reliability Configuration and if the Processor circuit pack is on the standby SPE, this abort code may indicate that the standby SPE is not responding to the handshake message. If this is the case, the standby SPE maintenance software may take up to two minutes to indicate that handshake communication with the standby SPE is down. The ABORT code will then change to 1339 (standby SPE unavailable). 1. Retry the command at 1-minute intervals, a maximum of 3 times. 2. If the test continues to abort with this abort code, follow normal escalation procedures.
2334	ABORT	The hardware mail on the standby Duplication Interface board is not ready to receive messages. 1. Retry the command at 1-minute intervals, a maximum of 5 times. 2. If the test continues to abort with this abort code, follow normal escalation procedures.

Continued on next page

Table 9-304. TEST #897 Processor BOOTPROM Checksum Test — *Continued*

Error Code	Test Result	Description/ Recommendation
	FAIL	The computed checksum did not match the BOOTPROM checksum. The system may not continue to operate correctly. The system may fail at some future date when the corrupted area the bootstrap BOOTPROM is accessed. 1. Replace the Processor circuit pack. 2. If the test continues to fail after replacing the Processor circuit pack, follow normal escalation procedures. To replace the Processor circuit pack, refer to *Replacing SPE Circuit Packs* in Chapter 5, "Responding to Alarms and Errors".
	PASS	The computed checksum matched the BOOTPROM checksum. This part of the Processor will continue to operate normally.

Processor Parity Checker Test (#899)

This test verifies that the Processor can detect parity errors on the bus. If this part of the Processor circuit pack is faulty, the system may continue to operate properly, but may not correctly respond if a bus problem arises later. The Processor reads a special memory location on the SYSAM circuit pack to perform this test. Problems with the SYSAM may also cause this test to fail.

Table 9-305. TEST #899 Processor Parity Checker Test

Error Code	Test Result	Description/ Recommendation
100	ABORT	The requested test did not complete within the allowable time period. 1. Retry the command. 2. If the test continues to abort, follow normal escalation procedures.
1022 1335 2500	ABORT	Internal System Error 1. Retry the command. 2. If the test continues to abort, follow normal escalation procedures.
1338	ABORT	The test is not allowed to run since a planned SPE interchange is in progress. This may be caused by a planned interchange initiated automatically during 24 hour scheduled testing. 1. Wait 3 minutes and retry the command. 2. If the test continues to abort, follow normal escalation procedures.

Continued on next page

Table 9-305. TEST #899 Processor Parity Checker Test — *Continued*

Error Code	Test Result	Description/ Recommendation
1339	ABORT	The test could not run on the standby Processor circuit pack in the standby SPE carrier because the standby SPE is unavailable. 1. Refer to the STBY-SPE maintenance documentation for information on why a standby SPE may be unavailable and what repair actions should be taken. The screen for the **status spe** command should indicate that handshake is down. This may be caused by a variety of reasons such as the SPE-SELECT switches on the DUPINT circuit packs being set to the position of the active SPE, a failure of the DUPINT circuit pack, or loss of power on the standby SPE. The *SPE Selected* field on the **status spe** screen will display *spe a* or *spe b* if both SPE-SELECT switches are in the a or b positions, respectively.
2000	ABORT	Response to the test request was not received within the allowable time period. If the system is equipped with the High Reliability or Critical Reliability Configuration and if the Processor circuit pack is on the standby SPE, this abort code may indicate that the standby SPE is not responding to the handshake message. If this is the case, the standby SPE maintenance software may take up to two minutes to indicate that handshake communication with the standby SPE is down. The ABORT code will then change to 1339 (standby SPE unavailable). 1. Retry the command at 1-minute intervals, a maximum of 3 times. 2. If the test continues to abort with this abort code, follow normal escalation procedures.
2334	ABORT	The hardware mail on the standby Duplication Interface board is not ready to receive messages. 1. Retry the command at 1-minute intervals, a maximum of 5 times. 2. If the test continues to abort with this abort code, follow normal escalation procedures.

Continued on next page

Table 9-305. TEST #899 Processor Parity Checker Test — *Continued*

Error Code	Test Result	Description/ Recommendation
	FAIL	The Processor cannot detect bus parity error conditions. 1. Retry the command. 2. If the test continues to fail, replace the Processor circuit pack. 3. If the test continues to fail after replacing the Process circuit pack, replace the SYSAM circuit pack. 4. If the test continues to fail after replacing the Processor and SYSAM circuit packs, follow normal escalation procedures. To replace the Processor circuit pack, refer to *Replacing SPE Circuit Packs* in Chapter 5, "Responding to Alarms and Errors".
	PASS	The Processor Parity Checker is functional.

Processor Write Buffer Test (#900)

This test verifies that the Write Buffer operates properly on the Processor circuit pack. Failure of this test is serious. The Processor circuit pack must be replaced as soon as possible.

Table 9-306. TEST #900 Processor Write Buffer Test

Error Code	Test Result	Description/ Recommendation
100	ABORT	The requested test did not complete within the allowable time period. 1. Retry the command. 2. If the test continues to abort, follow normal escalation procedures.
1022 1335 2500	ABORT	Internal System Error 1. Retry the command. 2. If the test continues to abort, follow normal escalation procedures.
1338	ABORT	The test is not allowed to run since a planned SPE interchange is in progress. This may be caused by a planned interchange initiated automatically during 24 hour scheduled testing. 1. Wait 3 minutes and retry the command. 2. If the test continues to abort, follow normal escalation procedures.

Continued on next page

Table 9-306. TEST #900 Processor Write Buffer Test — *Continued*

Error Code	Test Result	Description/ Recommendation
1339	ABORT	The test could not run on the standby Processor circuit pack in the standby SPE carrier because the standby SPE is unavailable. 1. Refer to the STBY-SPE maintenance documentation for information on why a standby SPE may be unavailable and what repair actions should be taken. The screen for the **status spe** command should indicate that handshake is down. This may be caused by a variety of reasons such as the SPE-SELECT switches on the DUPINT circuit packs being set to the position of the active SPE, a failure of the DUPINT circuit pack, or loss of power on the standby SPE. The *SPE Selected* field on the **status spe** screen will display *spe a* or *spe b* if both SPE-SELECT switches are in the a or b positions, respectively.
2000	ABORT	Response to the test request was not received within the allowable time period. If the system is equipped with the High Reliability or Critical Reliability Configuration and if the Processor circuit pack is on the standby SPE, this abort code may indicate that the standby SPE is not responding to the handshake message. If this is the case, the standby SPE maintenance software may take up to two minutes to indicate that handshake communication with the standby SPE is down. The ABORT code will then change to 1339 (standby SPE unavailable). 1. Retry the command at 1-minute intervals, a maximum of 3 times. 2. If the test continues to abort with this abort code, follow normal escalation procedures.
2334	ABORT	The hardware mail on the standby Duplication Interface board is not ready to receive messages. 1. Retry the command at 1-minute intervals, a maximum of 5 times. 2. If the test continues to abort with this abort code, follow normal escalation procedures.

Continued on next page

Table 9-306. TEST #900 Processor Write Buffer Test — *Continued*

Error Code	Test Result	Description/ Recommendation
	FAIL	The Processor Write Buffer is not operating correctly. 1. Replace the Processor circuit pack immediately. 2. If the test continues to fail after replacing the Processor circuit pack, follow normal escalation procedures. To replace the Processor circuit pack, refer to *Replacing SPE Circuit Packs* in Chapter 5, 'Responding to Alarms and Errors".
	PASS	The Write Buffer portion of the Processor circuit pack is operating correctly.

Maintenance Object Repair Procedures
RING-GEN

R

RING-GEN (Analog Ring Generator)

MO Name As It Appears in Alarm Log	Alarm Level	Initial System Technician Command to Run (a)	Full Name of MO
RING-GEN	MAJOR	test environment P	Analog Ring Generator

a. P is the port network number indicated in the PORT field from the Alarm or Error Log.

Analog phones must be provided with a voltage that allows them to ring. The Analog Ring Generator maintenance object represents the device that provides the ringing voltage for all analog phones associated with a given cabinet. In a multicarrier cabinet, the Analog Ring Generator resides in the Power Distribution Unit (PDU). It is protected by a fuse located next to the main circuit breaker on the front of the PDU (labeled F9 in AC-powered cabinets). See Figure 9-92 on the next page and Figure 9-93 on page R-3. In single-carrier cabinets, the Analog Ring Generator is part of the WP-91153 power supply. Failure of the ring generator results in loss of ringing on analog phones. Ringing on digital and hybrid phones is not affected.

The ringing voltage is monitored by the TN768, or TN780 Tone-Clock circuit pack. In a port network with duplicated Tone-Clocks, it is the active Tone-Clock that performs this function. In an EPN made up of single-carrier cabinets, the Tone-Clock monitors only the ringing voltage in the carrier that contains the tone clock.

The TN2036 Voltage Range circuit pack provides easy access for testing the various voltages on the backplane pins. For more information, refer to the ‘‘Troubleshooting Backplane Voltage Problems’’ section in Chapter 5, 'Responding to Alarms and Errors", ‘‘Routine Maintenance Procedures.’’

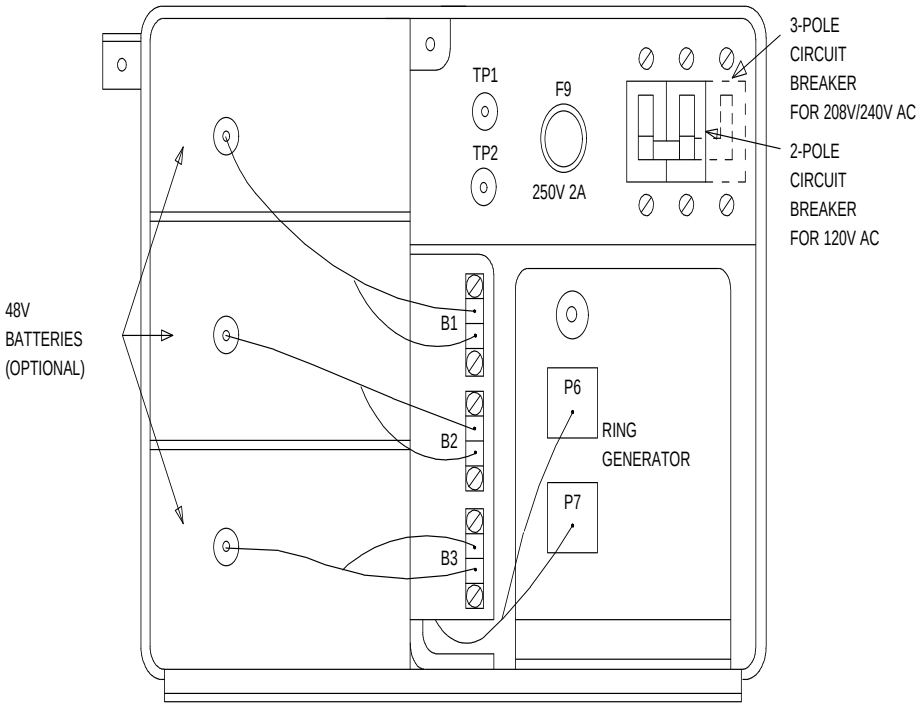

Figure 9-92. Multicarrier Cabinet AC Power Distribution Unit, Front View without Cover

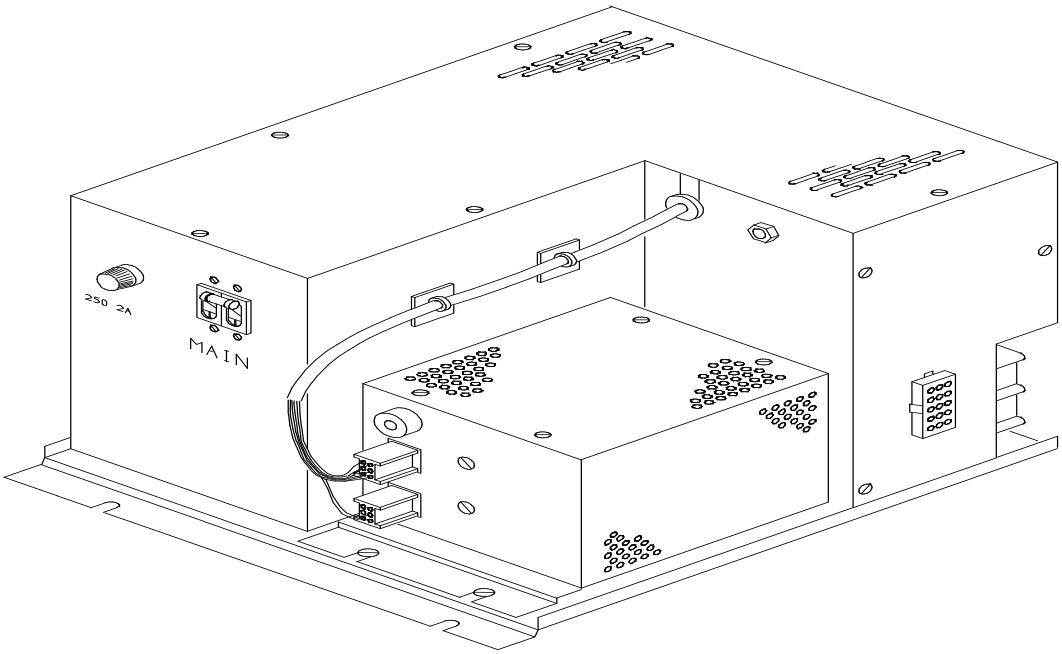

Figure 9-93. Multicarrier Cabinet DC Power Distribution Unit, Front View without Cover

Hardware Error Log Entries and Test to Clear Values

Analog Ring Generator Error Log Entries					
Error Type	**Aux Data**	**Associated Test**	**Alarm Level**	**On/Off Board**	**Test to Clear Value**
0*	0	Any	Any	Any	test environment UU
1		Analog Ring Generator Query (#118)	MAJOR	ON	test environment UU r 3

* Run the Short Test Sequence first. If all tests pass, run the Long Test Sequence. Refer to the appropriate test description and follow the recommended procedures.

System Technician-Demanded Tests: Descriptions and Error Codes

Always investigate tests in the order presented in the table below when inspecting errors in the system. By clearing error codes associated with the *Analog Ring Generator Initialization* Test, for example, you may also clear errors generated from other tests in the testing sequence.

Multicarrier Cabinet

Order of Investigation	Short Test Sequence	Long Test Sequence	D/ND*
Analog Ring Generator Initialization Test (#117)	X	X	ND
Analog Ring Generator Query Test (#118)	X	X	ND
Battery & Battery Charger Query Test (#5) (a)	X	X	ND
AC Power Query Test (#78) (b)	X	X	ND
OLS Query Test (Carrier E) (#127) (c)	X	X	ND
OLS Query Test (Carrier D) (#127) (c)	X	X	ND
OLS Query Test (Carrier A) (#127) (c)	X	X	ND
OLS Query Test (Carrier B) (#127) (c)	X	X	ND
OLS Query Test (Carrier C) (#127) (c)	X	X	ND
Emergency Transfer Query Test (#124) (d)	X	X	ND
Cabinet Sensors Query Test (#122) (e)	X	X	ND
External Alarm Lead Query Test (#120) (f)	X	X	ND

* D = Destructive, ND = Non-destructive

Notes:

a. Refer to POWER (Battery & Battery Charger) for a description of this test.

b. Refer to AC-POWER (AC Power) for a description of this test.

c. Refer to CARR-POW (Carrier Port Power Supply) for a description of this test.

d. Refer to EMG-XFER (Emergency Transfer) for a description of this test.

e. Refer to CABINET (Cabinet Sensors) for a description of this test.

f. Refer to EXT-DEV (External Alarm Lead) for a description of this test.

Single-Carrier Cabinet

Order of Investigation	Short Test Sequence	Long Test Sequence	D/ND*
Analog Ring Generator Initialization Test (#117)	X	X	ND
Analog Ring Generator Query Test (#118)	X	X	ND
Single-Carrier Cabinet Power Query Test (#79) (a)	X	X	ND
Emergency Transfer Query Test (#124) (b)	X	X	ND
External Alarm Lead Query Test (#120) (c)	X	X	ND

* D = Destructive; ND = Nondestructive

Notes:

a. Refer to DC-POWER Maintenance documentation for a description of this test.

b. Refer to EMG-XFER (Emergency Transfer) Maintenance documentation for a description of this test.

c. Refer to EXT-DEV (External Alarm Lead) Maintenance documentation for a description of this test.

Analog Ring Generator Initialization Test (#117)

The TN768, or TN780 will report an error to the system software if the ringing voltage falls to low (only if system software has made a request to the TN768, or TN780 to monitor the voltage). The Analog Ring Generator Initialization Test sends a request to the TN768, or TN780. If there are redundant tone/clock circuit packs in the port network, then the request is sent only to the active tone/clock.

TEST #117 Analog Ring Generator Initialization Test

Error Code	Test Result	Description/ Recommendation
1 1000 1001 1003 1115 2012 2100	ABORT	The system software is unable to determine the active tone/clock circuit pack, unable to allocated the resources necessary to run the test, or unable to send a down link message. 1. Wait for the green LED on the active tone/clock to go out; use the **status port-network** command to determine the active Tone/Clock circuit pack. 2. Rerun the test. If the test aborts again, refer to TDM-CLK Maintenance documentation.
2000	ABORT	Response to the request was not received within the allowable time period. 1. Look for TDM-CLK errors and alarms. Resolve all other Tone/Clock problems first. 2. Rerun the test.
	PASS	The active Tone/Clock has successfully been enabled to monitor the ringing voltage level.

Analog Ring Generator Query Test (#118)

The Analog Ring Generator Query Test requests the active Tone/Clock circuit pack to check the ringing voltage. The tone/clock circuit pack replies with PASS if the ringing voltage is adequate to ring the analog phones. If not, the active tone/clock circuit pack replies with a FAIL.

Table 9-307. TEST #118 Analog Ring Generator Query Test

Error Code	Test Result	Description/ Recommendation
1 1000 1001 1003 1115 2012 2100	ABORT	Could not seize the resources to run the test. Other maintenance is running on the active tone/clock circuit pack. 1. Wait for the green LED on the active tone/clock circuit pack to go out; use the **status port-network** command to determine the active Tone/Clock circuit pack. 2. Rerun the test. If the test aborts again, refer to TDM-CLK maintenance documentation.
2000	ABORT	Response to the request was not received within the allowable time period. 1. Look for TDM-CLK errors and alarms. Resolve all other tone/clock problems first. 2. Rerun the test.

Continued on next page

Table 9-307. TEST #118 Analog Ring Generator Query Test — *Continued*

Error Code	Test Result	Description/ Recommendation
	FAIL	The ringing voltage is below acceptable levels. **Procedure for a multicarrier cabinet system:** 1. If this is a duplicated SPE system, then determine the active Tone/Clock circuit pack by issuing a **status port-network** command. Make the Standby Tone/Clock circuit pack active via the **set tone-clock PC** command and rerun the test. a. If the test passes, then the trouble is with the now Standby Tone/Clock circuit pack. Refer to the TONE-BD maintenance documentation for details on replacing the Standby Tone/Clock circuit pack. After the circuit pack is replaced, make this Tone/Clock active again by issuing the **set tone-clock PC** command and rerun the test. b. If the test fails, then proceed with Step 2. 2. Look for and resolve CARR-POW (Carrier Port Power Supply) alarms first, and then rerun the test. 3. Check fuse F9 on the Power Distribution Unit. Replace F9 if it is blown, and rerun the test. If the test still fails, then an Analog Line circuit pack could be defective and causing the Analog Ring Generator and/or fuse F9 to fail. 4. Unseat all Analog circuit packs in the affected cabinet, and replace fuse F9 again if needed. Rerun the test. 5. If the test passes, then the Analog Ring Generator is healthy, and one of the Analog circuit packs is defective. Replace the Analog circuit packs one at a time, and rerun the test to determine which circuit pack is causing the problem. When the defective Analog circuit pack is found, replace it. Rerun the test. If the test still fails, proceed with Step 6.

Continued on next page

Table 9-307. TEST #118 Analog Ring Generator Query Test — *Continued*

Error Code	Test Result	Description/ Recommendation
	FAIL *(cont'd.)*	6. Since the test still fails, the Analog Ring Generator is defective. Replace the Analog Ring Generator as follows: a. Open the PDU compartment door. The door is hinged on the right and has a magnetic latch on the left. b. If the reset button on the Analog Ring Generator is out, press it in. c. Originate calls to several analog stations on different port circuit packs in different carriers in the affected port network. d. If called stations ring, the fault is cleared. Proceed to Step f. If no stations ring, replace the Analog Ring Generator. To replace the Analog Ring Generator, first disconnect the output (P6) and input (P7) connectors from the Analog Ring Generator, and then remove the two screws at the base of the Analog Ring Generator. e. Replace the Analog Ring Generator, secure it with the two screws at the base, and replace the P6 and P7 connectors (P6 goes on top). f. Rerun the test. If the test still fails, proceed to Step 7. 7. The active tone/clock may be faulty and incorrectly reporting the level of the ringing voltage. Replace the active tone/clock and rerun the test. Refer to TONE-BD Maintenance documentation for details on replacing the tone/clock. Rerun the test. If the test still fails, escalate the problem.

Continued on next page

Table 9-307. TEST #118 Analog Ring Generator Query Test — *Continued*

Error Code	Test Result	Description/ Recommendation
	FAIL *(cont'd.)*	**Procedure for a single-carrier cabinet system:** This failure indicates that there is no ringing voltage in the carrier where the active tone/clock circuit pack resides. Other carriers may or may not have ringing voltage. 1. If this is a Duplicated Option system, then determine the active Tone-Clock circuit pack by issuing a **status system** command. Make the Standby Tone-Clock circuit pack active via the **set tone-clock PC** command and rerun the test. a. If the test passes, then the trouble is with the "new" Stand by Tone-Clock circuit pack. Refer to TONE-BD (Tone-Clock Circuit Pack) Maintenance documentation for details on replacing the Standby Tone-Clock circuit pack. After the circuit pack is replaced, make this Tone-Clock active again by issuing the **set tone-clock PC** command and rerun the test. b. If the test fails, then proceed with Step 2. 2. Unseat all analog circuit packs in the cabinet that contains the Active Tone/Clock circuit pack and rerun the test. 3. If the test passes, then the Analog Ring Generator is healthy and one of the analog circuit packs is defective. Replace the analog circuit packs one at a time, and rerun the test to determine which circuit pack is causing the problem. When the defective analog circuit pack is found, replace it. Rerun the test. If the test still fails, go to Step 4. 4. Replace the WP-91153 power unit for the affected carrier, and rerun the test. If the test still fails, go to Step 5. 5. The active tone/clock may be faulty and incorrectly reporting the level of the ringing voltage. Replace the active tone/clock and rerun the test. Refer to TONE-BD Maintenance documentation for details on replacing the active tone/clock circuit pack. Rerun the test. If the test still fails, escalate the problem.

Continued on next page

Table 9-307. TEST #118 Analog Ring Generator Query Test — *Continued*

Error Code	Test Result	Description/ Recommendation
	PASS	The analog ringing voltage level is acceptable. For a single-carrier cabinet stack, ringing voltage is acceptable in the cabinet containing the active tone/clock circuit pack.

Maintenance Object Repair Procedures
S-SYN-BD to SYSTEM

S

S-SYN-BD (Speech Synthesis Circuit Pack)

MO Name As It Appears in Alarm Log	Alarm Level	Initial System Technician Command to Run (a)	Full Name of MO
S-SYN-BD	MIN	test board UUCSS sh	Speech Synthesis Circuit Pack
S-SYN-BD	WRN	test board UUCSS sh	Speech Synthesis Circuit Pack

a. UU is the universal cabinet number (1 for PPN, 2 - 44 for EPNs). C is the carrier designation (A, B, C, D, or E). SS is the number of the slot in which the circuit pack resides (01 to 21).

Refer to XXX-BD (Common Port Circuit Pack) Maintenance documentation for circuit pack level errors. See also S-SYN-PT (Speech Synthesis Port) Maintenance documentation for related port information.

S-SYN-PT (Speech Synthesis Port)

MO Name As It Appears in Alarm Log	Alarm Level	Initial System Technician Command to Run (a)	Full Name of MO
S-SYN-PT	MAJOR	test port UUCSSpp sh	Speech Synthesis Port
S-SYN-PT	MINOR	test port UUCSSpp l	Speech Synthesis Port
S-SYN-PT	WARNING	test port UUCSSpp sh	Speech Synthesis Port

a. UU is the universal cabinet number (1 for PPN, 2 - 44 for EPNs). C is the carrier designation (A, B, C, D, or E). SS is the number of the slot in which the circuit pack resides (01 to 21). pp is the two digit port number (01, 02, ...).

The TN725B Speech Synthesis circuit pack provides four independent Speech Synthesis Ports which may be connected to any of the voice time slots on the Time Division Multiplex (TDM) Bus. Each Speech Synthesis Port consists of a speech synthesizer device (SSD) and is managed by a custom-coded programmable speech synthesizer (PSS) controller. The PSS controller is, in turn, controlled by the on-board microprocessor via a command interface specifically designed for this application. The PSS controller's main function is the orderly transfer of encoded speech from the speech vocabulary read-only memory (ROM) to the SSDs. The SSDs decode it and produce 64 kb/s 5-255 PCM (Pulse Code Modulation) speech. The encoded speech is stored in up to 512K bytes of on-board ROM. In addition, each Speech Synthesis Port has an associated dual-tone multifrequency receiver (DTMR) to receive touch-tone digits from a station set connected to the port via a voice time slot. The station set may be connected to the Speech Synthesis Port through either a line or trunk circuit.

When there is an incoming call to a port, the ''listen'' network time slot is connected to the DTMF receiver input and the ''talk'' network time slot is connected to the SSD output. This enables the Speech Synthesis Port to support speech synthesis features or touch-tone input with voice response features. Some of the features that use the Speech Synthesis Port's capabilities include Leave Word Calling, Automatic Circuit Assurance, Automatic Wakeup (hotel-motel), and Do Not Disturb (hotel-motel).

The Speech Synthesis circuit pack should not be confused with the Announcement circuit pack. Different voice features are supported by each circuit pack.

Hardware Error Log Entries and Test to Clear Values

Speech Synthesis Port Error Log Entries

Error Type	Aux Data	Associated Test	Alarm Level	On/Off Board	Test to Clear Value
0*	0	Any	Any	Any	test port UUCSSpp sh r 1
1(a)	17672	None			
18	0	busy-out port UUCSSpp	WARNING	OFF	release port UUCSSpp
130(b)		None	WARNING	ON	test port UUCSSpp sh
257		Speech Synthesis PSS Handshake Test (#168)	MAJOR	ON	test port UUCSSpp sh r 2
513	17922	Speech Synthesis Memory Test (#166)	MINOR	ON	test port UUCSSpp sh r 2
769	17664	Speech Synthesis DTMF Receiver Inquiry Test (#164)	MINOR	ON	test port UUCSSpp sh r 2
1025	17670	Speech Synthesis SSD Inquiry Test (#167)	MINOR	ON	test port UUCSSpp sh r 2
1281		Speech Synthesis DSP Tone Test (#165)	MINOR	ON	test port UUCSSpp sh r 2
1537		Speech Synthesis Memory Test (#166)	MINOR	ON	test port UUCSSpp sh r 2
1793		Speech Synthesis DTMF Receiver Test (#163)	MINOR	ON	test port UUCSSpp l r 2
2049		Conference Circuit Test (#7)	MINOR	ON	test port UUCSSpp l r 2
2305		NPE Crosstalk Test (#6)	MINOR	ON	test port UUCSSpp l r 2
3840(c)	Any	None			

* Run the Short Test Sequence first. If all tests pass, run the Long Test Sequence. Refer to the appropriate test description and follow the recommended procedures.

Notes:

a. An in-line failure of the on-board microprocessor/PSS handshake has occurred. Refer to Test #168 for repair procedures.

b. This error type indicates that the circuit pack been removed or has been insane for more than 11 minutes. To clear the error, reinsert or replace the circuit pack.

c. This error is not service-affecting and no action is required.

System Technician-Demanded Tests: Descriptions and Error Codes

Always investigate tests in the order presented in the table below when inspecting errors in the system. By clearing error codes associated with the *NPE Crosstalk Test,* for example, you may also clear errors generated from other tests in the testing sequence.

Order of Investigation	Short Test Sequence	Long Test Sequence	D/ND*
Speech Synthesis PSS Handshake Test (#168)	X	X	ND
NPE Crosstalk Test (#6)		X	ND
Conference Circuit Test (#7)		X	ND
Speech Synthesis DTMF Receiver Test (#163)		X	ND
Speech Synthesis Memory Test (#166)	X	X	ND
Speech Synthesis DSP Tone Test (#165)	X	X	ND
Speech Synthesis SSD Inquiry Test (#167)	X	X	ND
Speech Synthesis DTMF Receiver Inquiry Test (#164)	X	X	ND
Speech Synthesis Parameter Update Test (#169)	X	X	ND

* D = Destructive; ND = Nondestructive

NPE Crosstalk Test (#6)

One or more Network Processing Elements (NPEs) reside on each circuit pack with a TDM Bus interface. The NPE controls port connectivity and gain, and provides conferencing functions on a per-port basis. The NPE Crosstalk Test verifies that this port's NPE channel talks on the selected time slot and never crosses over to time slots reserved for other connections. If the NPE is not working correctly, one-way and noisy connections may occur. This test is usually only part of a port's Long Test Sequence and takes about 20 to 30 seconds to complete.

Table 9-308. TEST #6 NPE Crosstalk Test

Error Code	Test Result	Description/ Recommendation
	ABORT	Could not allocate the necessary system resources to run this test. 1. Retry the command at 1-minute intervals a maximum of 5 times. 2. If the test continues to abort, escalate the problem.
1000	ABORT	System resources required to run this test are not available. The port may be busy with a valid call and therefore unavailable for certain tests. You must wait until the port is idle (yellow LED is off) before retesting. 1. If the port is idle, retry the command at 1-minute intervals a maximum of 5 times. 2. If the test continues to abort, escalate the problem.
1001	ABORT	Could not allocate the necessary system resources to run this test. 1. Retry the command at 1-minute intervals a maximum of 5 times. 2. If the test continues to abort, escalate the problem.
1002	ABORT	The system could not allocate time slots for the test. The system may be under heavy traffic conditions or it may have time slots out-of-service due to TDM-BUS errors. Refer to TDM-BUS (TDM Bus) Maintenance documentation to diagnose any Active TDM-BUS errors. 1. If system has no TDM-BUS errors and is not handling heavy traffic, repeat test at 1-minute intervals a maximum of 5 times. 2. If the test continues to abort, escalate the problem.

Continued on next page

Table 9-308. TEST #6 NPE Crosstalk Test — *Continued*

Error Code	Test Result	Description/ Recommendation
1003	ABORT	The system could not allocate a tone receiver for the test. The system may be oversized for the number of Tone Detectors present or some Tone Detectors may be out-of-service. 1. Look for TTR-LEV errors in the Error Log. If present, refer to TTR-LEV (TTR Level) Maintenance documentation. 2. Look for TONE-PT errors in the Error Log. If present, refer to TONE-PT (Tone Generator) Maintenance documentation. 3. If neither condition exists, retry the test at 1-minute intervals a maximum of 5 times. 4. If the test continues to abort, escalate the problem.
1004	ABORT	The port was seized by a valid call during the test and the test has been aborted. You must wait until the port is idle (yellow LED is off) before retesting. 1. Retry the command at 1-minute intervals a maximum of 5 times. 2. If the test continues to abort and the port is not in use, escalate the problem.
1020	ABORT	The test did not run due to an already existing error on the specific port or a more general circuit pack error. 1. Examine Error Log for existing errors against this port or the circuit pack and attempt to diagnose the already existing error.
2000	ABORT	Response to the test request was not received within the allowable time period.
2100	ABORT	Could not allocate the necessary system resources to run this test. 1. Retry the command at 1-minute intervals a maximum of 5 times. 2. If the test continues to abort, escalate the problem.

Continued on next page

Table 9-308. TEST #6 NPE Crosstalk Test — *Continued*

Error Code	Test Result	Description/ Recommendation
Any	FAIL	The NPE of the tested port was found to be transmitting in error. This will cause noisy and unreliable connections. 1. Replace the circuit pack.
	PASS	The port is correctly using its allocated time slots. User-reported troubles on this port should be investigated using other port tests and by examining the Error Log.

Conference Circuit Test (#7)

One or more Network Processing Elements (NPEs) reside on each circuit pack with a TDM Bus interface. The NPE controls port connectivity and gain, and provides conferencing functions on a per-port basis. The Conference Circuit Test verifies that the NPE channel for the port being tested can correctly perform the conferencing function. The NPE is instructed to listen to several different tones and conference the tones together. The resulting signal is then measured by a Tone Detector port. If the level of the tone is within a certain range, the test passes.

Table 9-309. TEST #7 Conference Circuit Test

Error Code	Test Result	Description/ Recommendation
	ABORT	Could not allocate the necessary system resources to run this test. 1. Retry the command at 1-minute intervals a maximum of 5 times. 2. If the test continues to abort, escalate the problem.
1000	ABORT	System resources required to run this test are not available. The port may be busy with a valid call and therefore unavailable for certain tests. You must wait until the port is idle (yellow LED is off) before retesting. 1. If the port is idle, retry the command at 1-minute intervals a maximum of 5 times. 2. If the test continues to abort, escalate the problem.
1004	ABORT	The port was seized by a valid call during the test and the test has been aborted. You must wait until the port is idle (yellow LED is off) before retesting. 1. Retry the command at 1-minute intervals a maximum of 5 times. 2. If the test continues to abort and the port is not in use, escalate the problem.
1020	ABORT	The test did not run due to an already existing error on the specific port or a more general circuit pack error. 1. Examine Error Log for existing errors against this port or the circuit pack and attempt to diagnose the already existing error.

Continued on next page

Table 9-309. TEST #7 Conference Circuit Test — *Continued*

Error Code	Test Result	Description/ Recommendation
2000	ABORT	Response to the test request was not received within the allowable time period.
2100	ABORT	Could not allocate the necessary system resources to run this test. 1. Retry the command at 1-minute intervals a maximum of 5 times. 2. If the test continues to abort, escalate the problem.
Any	FAIL	The NPE of the tested port did not conference the tones correctly. This will cause noisy and unreliable connections. 1. Replace the circuit pack.
	PASS	The port can correctly conference multiple connections. User-reported troubles on this port should be investigated using other port tests and by examining the Error Log.

Speech Synthesis DTMF Receiver Test (#163)

A series of dual-tone multifrequency (DTMF) tones are conferenced from the TDM Bus into the port's DTMF receiver and checked to see if the correct tones have been detected during the correct intervals. If all the DTMF tones were detected correctly, the test passes. If any of the tones were not detected correctly, the test fails.

Table 9-310. TEST #163 Speech Synthesis DTMF Receiver

Error Code	Test Result	Description/ Recommendation
	ABORT	Could not allocate the necessary system resources to run this test. 1. Retry the command at 1-minute intervals a maximum of 5 times. 2. If the test continues to abort, escalate the problem.
1000	ABORT	System resources required to run this test are not available. The port may be busy with a valid call and therefore unavailable for certain tests. You must wait until the port is idle (yellow LED is off) before retesting. 1. If the port is idle, retry the command at 1-minute intervals a maximum of 5 times. 2. If the test continues to abort, escalate the problem.
2000	ABORT	Response to the test request was not received within the allowable time period.
2100	ABORT	Could not allocate the necessary system resources to run this test. 1. Retry the command at 1-minute intervals a maximum of 5 times. 2. If the test continues to abort, escalate the problem.

Continued on next page

Table 9-310. TEST #163 Speech Synthesis DTMF Receiver — *Continued*

Error Code	Test Result	Description/ Recommendation
Any	FAIL	DTMF tones were not detected. This type of failure may cause features using touch-tone input to the Speech Synthesis Port to malfunction. 1. Verify that the Tone-Clock circuit pack is functioning correctly by checking the Error Log and using the **test tone-clock long** command. 2. If the test fails again, replace the Speech Synthesis circuit pack.
	PASS	The port has detected all DTMF tones correctly. User-reported troubles should be investigated using other tests and by verifying other ports on this circuit pack are working correctly.

Speech Synthesis DTMF Receiver Inquiry Test (#164)

This test determines the sanity of the port's dual-tone multifrequency (DTMF) receiver. The on-board microprocessor tests the port's DTMF receiver and determines if it is in a sane (test passes) or insane (test fails) condition.

Table 9-311. TEST #164 Speech Synthesis DTMF Receiver Inquiry Test

Error Code	Test Result	Description/ Recommendation
	ABORT	Could not allocate the necessary system resources to run this test. 1. Retry the command at 1-minute intervals a maximum of 5 times. 2. If the test continues to abort, escalate the problem.
1000	ABORT	System resources required to run this test are not available. The port may be busy with a valid call and therefore unavailable for certain tests. You must wait until the port is idle (yellow LED is off) before retesting. 1. If the port is idle, retry the command at 1-minute intervals a maximum of 5 times. 2. If the test continues to abort, escalate the problem.
2000	ABORT	Response to the test request was not received within the allowable time period.
2100	ABORT	Could not allocate the necessary system resources to run this test. 1. Retry the command at 1-minute intervals a maximum of 5 times. 2. If the test continues to abort, escalate the problem.
Any	FAIL	The DTMF receiver for this port is insane. 1. If the test fails again, replace the circuit pack.
	PASS	The DTMF receiver for this port is sane. User-reported troubles should be investigated using other tests and by verifying other ports on this circuit pack are working correctly.

Speech Synthesis DSP Tone Test (#165)

The digital signal processor (DSP) associated with each port can generate a 440-Hz tone whose presence can be detected by TN748 General Purpose Tone Detector circuit packs. A 440-Hz tone is generated for 500 ms on a specified time slot which is being listened to by the detector circuit. If the detector determines the tone is present on the time slot, the test passes; otherwise, it fails.

Table 9-312. TEST #165 Speech Synthesis DSP Tone Test

Error Code	Test Result	Description/ Recommendation
	ABORT	Could not allocate the necessary system resources to run this test. 1. Retry the command at 1-minute intervals a maximum of 5 times. 2. If the test continues to abort, escalate the problem.
1000	ABORT	System resources required to run this test are not available. The port may be busy with a valid call and therefore unavailable for certain tests. You must wait until the port is idle (yellow LED is off) before retesting. 1. If the port is idle retry the command at 1-minute intervals a maximum of 5 times. 2. If the test continues to abort, escalate the problem.
1001 1002 1003	ABORT	System resources required to run this test are not available. 1. Retry the command at 1-minute intervals a maximum of 5 times. 2. If the test continues to abort, escalate the problem.

Continued on next page

Table 9-312. TEST #165 Speech Synthesis DSP Tone Test — *Continued*

Error Code	Test Result	Description/ Recommendation
1021	ABORT	The 440-Hz tone was not detected by the Tone Detector circuit and inter-digit time-out has occurred on the Tone Detector circuit. 1. Retry the command at 1-minute intervals a maximum of 5 times. 2. If the test continues to abort, verify all Tone Detector circuit packs in the system are functioning correctly by checking the Error Log and using the **test board UUCSS long** command. Replace any faulty Tone Detector circuit packs and repeat the test. 3. If the test continues to abort, replace the Speech Synthesis circuit pack.
2000	ABORT	Response to the test request was not received within the allowable time period.
2100	ABORT	Could not allocate the necessary system resources to run this test. 1. Retry the command at 1-minute intervals a maximum of 5 times. 2. If the test continues to abort, escalate the problem.
Any	FAIL	The 440-Hz tone was not detected by the Tone Detector circuits. 1. If the test fails again, verify all Tone Detector circuit packs in the system are functioning correctly by checking the Error Log and using the **test board UUCSS long** command. Replace any faulty Tone Detector circuit packs and repeat the test. 2. If the test fails again, replace the Speech Synthesis circuit pack.
	PASS	The 440-Hz tone has been detected correctly. User-reported troubles should be investigated using other tests and by verifying other ports on this circuit pack are working correctly.

Speech Synthesis Memory Test (#166)

The encoded speech for the Speech Synthesis circuit pack is stored in on-board read-only memory (ROM). A checksum is computed for each 32K speech memory block and compared against a known checksum value. If all computed checksum values are successfully compared against the stored checksum values, the test passes. If, while testing the speech complex memory, the on-board microprocessor finds a memory error, the test is terminated and a failure is reported. This type of failure may affect other ports on the Speech Synthesis circuit pack, resulting in errors or alarms on each port.

Table 9-313. TEST #166 Speech Synthesis Memory Test

Error Code	Test Result	Description/ Recommendation
	ABORT	Could not allocate the necessary system resources to run this test. 1. Retry the command at 1-minute intervals a maximum of 5 times. 2. If the test continues to abort, escalate the problem.
1000	ABORT	System resources required to run this test are not available. The port may be busy with a valid call and therefore unavailable for certain tests. You must wait until the port is idle (yellow LED is off) before retesting. 1. If the port is idle, retry the command at 1-minute intervals a maximum of 5 times. 2. If the test continues to abort, escalate the problem.
1019	ABORT	Test is already running on a different port, possibly due to background maintenance activity. Only one of these tests may be active on a circuit pack at a time. 1. Retry the command at 1-minute intervals a maximum of 5 times. 2. If the test continues to abort, escalate the problem.
2000	ABORT	Response to the test request was not received within the allowable time period.
2100	ABORT	Could not allocate the necessary system resources to run this test. 1. Retry the command at 1-minute intervals a maximum of 5 times. 2. If the test continues to abort, escalate the problem.

Continued on next page

Table 9-313. TEST #166 Speech Synthesis Memory Test — *Continued*

Error Code	Test Result	Description/ Recommendation
Any	FAIL	The computed checksum from the speech vocabulary ROM did not compare correctly with the stored checksum. This type of failure may cause features using the Speech Synthesis Port's speech services to malfunction and result in degradation of synthesized speech quality ranging from insignificant to major. 1. Replace the circuit pack.
	PASS	The computed checksum values were successfully compared against the stored checksum values. User-reported troubles should be investigated using other tests and by verifying other ports on this circuit pack are working correctly.

Speech Synthesis SSD Inquiry Test (#167)

This test determines the sanity of the specified port's speech synthesis device (SSD). The on-board microprocessor tests the port's SSD and determines if it is in a sane (test passes) or insane (test fails) condition. Other ports on the Speech Synthesis circuit pack will continue to function correctly during this type of failure.

Table 9-314. TEST #167 Speech Synthesis SSD Inquiry Test

Error Code	Test Result	Description/ Recommendation
	ABORT	Could not allocate the necessary system resources to run this test. 1. Retry the command at 1-minute intervals a maximum of 5 times. 2. If the test continues to abort, escalate the problem.
1000	ABORT	System resources required to run this test are not available. The port may be busy with a valid call and therefore unavailable for certain tests. You must wait until the port is idle (yellow LED is off) before retesting. 1. If the port is idle, retry the command at 1-minute intervals a maximum of 5 times. 2. If the test continues to abort, escalate the problem.
2000	ABORT	Response to the test request was not received within the allowable time period.
2100	ABORT	Could not allocate the necessary system resources to run this test. 1. Retry the command at 1-minute intervals a maximum of 5 times. 2. If the test continues to abort, escalate the problem.
Any	FAIL	The SSD is insane. 1. Replace the circuit pack.
	PASS	The SSD is sane. User-reported troubles should be investigated using other tests and by verifying other ports on this circuit pack are working correctly.

Speech Synthesis PSS Handshake Test (#168)

This test verifies control functionality between the on-board microprocessor and programmable speech synthesizer (PSS) controller. A failure occurs if either of the following events occur:

- The on-board microprocessor times out while waiting for the PSS controller to respond.
- An invalid command is received by the on-board microprocessor from the PSS controller.

This type of failure will affect all four ports on the Speech Synthesis circuit pack, resulting in errors or alarms on each port.

Table 9-315. TEST #168 Speech Synthesis PSS Handshake Test

Error Code	Test Result	Description/ Recommendation
	ABORT	Could not allocate the necessary system resources to run this test. 1. Retry the command at 1-minute intervals a maximum of 5 times. 2. If the test continues to abort, escalate the problem.
1000	ABORT	System resources required to run this test are not available. The port may be busy with a valid call and therefore unavailable for certain tests. You must wait until the port is idle (yellow LED is off) before retesting. 1. If the port is idle, retry the command at 1-minute intervals a maximum of 5 times. 2. If the test continues to abort, escalate the problem.
2000	ABORT	Response to the test request was not received within the allowable time period.
2100	ABORT	Could not allocate the necessary system resources to run this test. 1. Retry the command at 1-minute intervals a maximum of 5 times. 2. If the test continues to abort, escalate the problem.

Continued on next page

Table 9-315. TEST #168 Speech Synthesis PSS Handshake Test — *Continued*

Error Code	Test Result	Description/ Recommendation
Any	FAIL	The on-board microprocessor has timed out while waiting for the PSS controller to respond or an invalid command has been received by the on-board microprocessor from the PSS controller. This type of failure may cause features using the Speech Synthesis Port's speech services to malfunction. 1. Replace the circuit pack.
	PASS	The on-board microprocessor/PSS handshake is working correctly. User-reported troubles should be investigated using other tests and by verifying other ports on this circuit pack are working correctly.

Speech Synthesis Parameter Update Test (#169)

This test updates the dual-tone multifrequency (DTMF) interdigit time-out parameter used by the Speech Synthesis circuit pack so that it is consistent with that specified by the switch processing element (SPE).

Table 9-316. TEST #169 Speech Synthesis Parameter Update Test

Error Code	Test Result	Description/ Recommendation
	ABORT	Could not allocate the necessary system resources to run this test. 1. Retry the command at 1-minute intervals a maximum of 5 times. 2. If the test continues to abort, escalate the problem.
1000	ABORT	System resources required to run this test are not available. The port may be busy with a valid call and therefore unavailable for certain tests. You must wait until the port is idle (yellow LED is off) before retesting. 1. If the port is idle, retry the command at 1-minute intervals a maximum of 5 times. 2. If the test continues to abort, escalate the problem.
2100	ABORT	Could not allocate the necessary system resources to run this test. 1. Retry the command at 1-minute intervals a maximum of 5 times. 2. If the test continues to abort, escalate the problem.
Any	FAIL	An internal system error has occurred. 1. If the test continues to fail, escalate the problem.
	PASS	The DTMF interdigit time-out parameter has been updated. 1. User-reported troubles should be investigated using other tests and by verifying that other ports on this circuit pack are working correctly.

The SEC-CDR (SEC-CDR Link) maintenance strategy is covered in the PRI-CDR/SEC-CDR (PRI-CDR Link) Maintenance documentation.

SN-CONF (Switch Node Configuration)

MO Name As It Appears in Alarm Log	Alarm Level	Initial System Technician Command to Run (a)	Full Name of MO
SN-CONF	MAJOR	test board UUCSS s	Switch Node Configuration
SN-CONF	MINOR	test board UUCSS (b)	Switch Node Configuration

a. UU is the universal cabinet number (1 for PPN, 2 — 44 for EPNs). C is the carrier designation (A, B, C, D, or E). SS is the number of the slot in which the circuit pack resides (01 to 21). pp is the two digit port number (01, 02, ...).

b. If the error and alarm logs display the switch node carrier location UUC, (cabinet and carrier only), run the *long* test sequence on the active SNC in the carrier, (slot 10 or 12). If the error and alarm logs display a circuit pack location, UUCSS, run the *short* test sequence on the alarmed SNI.

A switch node carrier contains:

- Up to 16 Switch Node Interface (SNI) TN573 circuit packs in slots 2 through 9 and slots 13 through 20
- One or two Switch Node Clock (SNC) TN572 circuit packs in slots 10 and 12
- An Expansion Interface (EI) TN570 circuit pack, a DS1 Converter (DS1C) TN574 circuit pack, or no circuit pack in slot 1
- An optional DS1C circuit pack in slot 21

SN-CONF errors and alarms are generated for two types of failures:

1. Failure of a board in the switch node carrier to insert (be detected by software).
2. A problem found by running the Configuration Audit (test #759). Test 759 is executed for either an SNI or SNC circuit pack during scheduled maintenance or as part of the **test board UUCSS s** command.

   For SNI circuit packs, test 759 queries the SNI for SNCs in the same switch node carrier, SNI peers, DS1Cs, and EI or SNI neighbors that the SNI can communicate with and compares this data to the administered data.

   For SNC circuit packs, test 759 queries the SNC for SNCs and SNIs in the same switch node carrier that the SNC can communicate with and compares this data to the administered data.

Switch node carriers are part of port network connectivity (PNC). For background information about PNC, refer to Chapter 2, "Hardware Configurations" and Chapter 9, "Maintenance Object Repair Procedures".

Hardware Error Log Entries and Test to Clear Values

SN-CONF Error Log Entries

Error Type	Aux Data	Associated Test	Alarm Level	On/Off Board	Test to Clear Value
0*	0	Any	Any	Any	test board UUCSS sh r 1
5000(a)	Any	processor route audit (#760)	MINOR	OFF	test board UUCSS l rep 1
6000(b)	1	configuration audit (#759)	MAJOR	OFF	test board UUCSS rep 1
6000(b)	2	configuration audit (#759)	MAJOR	OFF	test board UUCSS rep 1
6001(c)	Any	configuration audit (#759)	MAJOR	OFF	test board UUCSS rep 1
6002(d)	1	configuration audit (#759)	MAJOR	OFF	test board UUCSS rep 1
6002(d)	2	configuration audit (#759)	MAJOR	OFF	test board UUCSS rep 1
6003(e)	Any	configuration audit (#759)	MAJOR	OFF	test board UUCSS rep 1
6004(f)	Any	configuration audit (#759)	MAJOR	OFF	test board UUCSS rep 1
6005(g)	Any	configuration audit (#759)	MAJOR	OFF	test board UUCSS rep 1
6005(g)	1	configuration audit (#759)	MAJOR	OFF	test board UUCSS rep 1
6005(g)	2	configuration audit (#759)	MAJOR	OFF	test board UUCSS rep 1
6006(h)	Any	configuration audit (#759)	MINOR	OFF	test board UUCSS rep 1
6007(i)	Any	configuration audit (#759)	MINOR	OFF	test board UUCSS rep 1

Notes:

a. At least one administered circuit pack in this switch node carrier was not inserted, or one or more administered circuit packs in this switch node carrier did not respond to Test 760 with an up-link board insertion message.

   To resolve this error, run test 760 via **test board UUCSS l** for an SNC in the same switch node carrier that has this error.

b. No neighbor link is administered but the SNI has one. If the aux data is 1, the type of neighbor connected is an EI. If the aux data is 2, the type of neighbor connected is an SNI.

   To resolve error type 6000 with aux data 1, refer to FAIL code 133 for test 759. To resolve error type 6000 with aux data 2, refer to FAIL code 134 for test 759.

c. No neighbor link exists between the SNI and its neighbor, but a neighbor link, i.e. fiber link, is administered.

   To resolve this error, refer to FAIL code 135 for test 759.

d. The physical neighbor type does not match administration. If the aux data is 1, the type of neighbor administered is an SNI and the type of neighbor connected is an EI. If the aux data is 2, the type of neighbor administered is an EI and the type of neighbor connected is an SNI.

   To resolve error type 6002 with aux data 1, refer to FAIL code 136 for test 759. To resolve error type 6002 with aux data 2, refer to FAIL code 137 for test 759.

e. The neighbor location does not match administration.

   To resolve this error, refer to FAIL code 138 for test 759.

f. A peer link does not exist to another equipped SNI. The aux data equals the slot number of the SNI to which this SNI or SNC does not have a peer link. To resolve this error, refer to the FAIL code for test 759 corresponding to the aux data on the following table:

Aux Data (slot no.)	Test 759 FAIL Code
2	102
3	103
4	104
5	105
6	106
7	107
8	108
9	109
13	113
14	114
15	115
16	116
17	117
18	118
19	119
20	120

g. A link does not exist to one of the SNCs. If the aux data is not 1 or 2, the link from this SNI to the active SNC does not exist. If the aux data is 1, the link from this SNC to the active SNC does not exist. If the aux data is 2, the link from this SNC to the standby SNC does not exist.

   To resolve this error, refer to FAIL code 112 for test 759.

h. The SNI is administered to be connected to a DS1C but is not.

   To resolve this error, refer to FAIL code 139 for test 759.

i. The SNI is connected to a DS1C, but no DS1C is administered.

   To resolve this error, refer to FAIL code 140 for test 759.

System Technician-Demanded Tests: Descriptions and Error Codes

Always investigate tests in the order presented in the table below when inspecting errors in the system. By clearing error codes associated with the *Configuration Audit* for example, you may also clear errors generated from other tests in the testing sequence.

Order of Investigation	Short Test Sequence	Long Test Sequence	Reset Board Sequence	D/ND*
Configuration Audit (#759)	X	X		ND
Processor Route Audit (#760)		X		ND

* D = Destructive; ND = Nondestructive

Configuration Audit (#759)

This test is non-destructive.

NOTE:
For descriptions of result codes for this test refer to:

- SNC-BD when the circuit pack tested is a Switch Node Clock (circuit pack slots 10 or 12).
- SNI-BD when the circuit pack tested is a Switch Node Interface (circuit pack slots 2-9 or 13-20).

This test is run via the **test board short** or **test board long** command for SNI circuit packs or SNC circuit packs.

For SNI circuit packs, this test queries the SNI for SNCs in the same switch node carrier, SNI peers, DS1Cs, and EI or SNI neighbors that the SNI can communicate with and compares this data to the administered data.

For SNC circuit packs, this test queries the SNC for SNCs and SNIs in the same switch node carrier that the SNC can communicate with and compares this data to the administered data.

Failures of this test cause entries in the error and alarm logs against Switch Node Configuration (SN-CONF) with the board location of the SNI or SNC.

Incorrectly Connected Administered Fibers

Some physically connected fibers that do not match fiber administration can cause port network problems that are not detected and alarmed by PNC test. The symptoms will usually be phone calls not working correctly, and port network component alarms because of translation mismatches.

This test is unable to detect the case where an SNI is connected to the same type of board (EI or SNI) as administered but located in a different cabinet but the same carrier and same slot as the administered fiber endpoint. The administered fiber endpoint can be viewed with the **list fiber-link** command. This test can only detect if the fiber endpoint connected to the SNI is in a different carrier, slot location than the administered fiber endpoint.

Incorrectly Connected Administered SNI-EI Fibers

If the SNI is connected to the same type of fiber endpoint as the administered fiber endpoint, but the location is the same as administered except for the cabinet, all phone calls will not work correctly; some phone calls will not go through and some phone calls will ring the wrong phone.

The **test led** command can be used in this case to check connectivity.

1. Run the **test led port-network** command on each administered port network and verify that the LEDs on the correct port network are lit.
2. If they are not lit, check that the fiber connections to the port network are consistent with the administered fibers (**list fiber-link**) that does not light the LEDs as expected.
3. Run **test led switch-node** on each administered switch node carrier and verify that the LEDs on the correct carrier are lit.
4. If they are not, check the connectivity to the switch node carrier that does not light the LEDs as expected.

Incorrectly Connected SNI-SNI Fibers between 3 Switch Nodes

If the system has more than 2 switch nodes, SNI-SNI fibers administered between 2 switch nodes could be incorrectly connected to a third switch node. This is a problem that could occur during installation or when inter-switch node fibers are changed. For multiple fibers to a distant switch node (not the PPN switch node), an incorrect connection would not appear as a problem unless this fiber is used for a system-link to a port network connected to the distant switch node. The **status system-link** command can be used to determine the boards in the path from the PPN to a specific port network. A specific SNI-SNI fiber connection must be in the system-link path to be checked with the port network LED test.

Forcing SNI-SNI Fiber Connection

To force an SNI-SNI fiber connection to be used as a system-link remove all SNI-SNI connections except the fiber-link being tested at the distant switch node by removing SNI boards in the distant switch node.

1. Use the **status system-link** command to verify that the fiber selected for test is in the path to the EPN connected to the distant switch node that will be used for the LED test.
2. Run the **test led** sequence to a port network as described above to verify this fiber connection.
3. Repeat the above procedure for each of the SNI-SNI fibers terminating on the distant switch node.

Testing Multiple Fiber Connections

To test multiple fiber connections to a distant switch node:

1. Use the **list fiber-link** command to determine the number of SNI-SNI fibers that are administered and terminate on the distant switch node.
2. Run the **test led port-network** command on a port network connected to the distant switch node and verify the LEDs on the correct port network are lit.

3. Use the **status system-link** command and select the active EI in the port network connected to the distant port network under test. This display will show the path from the PPN and the SNI-SNI fiber being used.
4. If the port network LEDs are not lit, verify that the fiber connections to the port network are consistent with the administration assignments by using the **list fiber-link** command.
5. If the port network LEDs are lit and there are multiple fibers to the distant switch node, remove the SNC that is listed by the **list fiber-link** command for this path.
6. Use the **status system-link** command to determine the new path from the PPN to the distant switch.
7. Run the **test led port-network** command on a port network connected to the distant switch node and verify that the LEDs on the correct port network are lit.
8. Repeat steps 5 — 7 until all SNI-SNI fiber connections to the distant switch have been tested.

Processor Route Audit Test (#760)

This test is non-destructive.

This test sends processor routes to all SNIs and SNCs in the same carrier as the SNC that the **test board UCSS** command was run for. The processor route is used for the boards to send uplink messages to the SPE and gives a sequence of boards for the message to get routed through so that the message ends up at the SPE. If the SNI and SNC boards do not have processor routes, they will not be able to send any in-line errors to the SPE.

When each individual board receives the processor routes, it sends a board insertion message uplink and software inserts that board if it has not already been inserted. Each board is sent either one or two processor routes depending on the configuration.

The **test led** or **list config carrier** command can be used to see whether boards are inserted.

The processor route test is run as part of the long test sequence for SNC boards.

Table 9-317. TEST #760 Processor Route Audit Test

Error Code	Test Result	Description/ Recommendation
2100	ABORT	Could not allocate the necessary system resources to run this test. 1. Retry the command at 1 minute intervals a maximum of 3 times. 2. If the test continues to abort, follow normal escalation procedures.
2300	ABORT	The downlink message necessary to run this test could not be sent. 1. Retry the command at 1 minute intervals a maximum of 3 times. 2. If the test continues to abort, follow normal escalation procedures.

Continued on next page

Table 9-317. TEST #760 Processor Route Audit Test — *Continued*

Error Code	Test Result	Description/ Recommendation
2301	ABORT	The software timer could not be set before sending the downlink message necessary to run this test. 1. Retry the command at 1 minute intervals a maximum of 3 times. 2. If the test continues to abort, follow normal escalation procedures.
2306	ABORT	None of the circuit packs in this switch node carrier are responding to the processor route messages sent by software. 1. Run the **test led switch-node** for the switch node that this switch node carrier resides in to verify whether the LEDs on any of the boards light. 2. If none of the LEDs light for the boards in this carrier, fix any problems associated with the connectivity of this carrier to the SPE. Check **list fibers** to determine the fiber connections to this carrier. Check the LEDs on all SNIs and EIs and fix any fiber problems. Enter **display errors** and follow the associated repair procedures for any EXP-INTF error entries associated with the PPN. Also, follow the associated repair procedures for any SYNC, SNI-BD, SNC-BD, FIBER-LK, or SNI-PEER error entries. 3. If the test continues to abort, follow normal escalation procedures.
2500	ABORT	Internal System Error 1. Retry the command at 1 minute intervals a maximum of 3 times. 2. If the test continues to abort, follow normal escalation procedures.

Continued on next page

Table 9-317. TEST #760 Processor Route Audit Test — *Continued*

Error Code	Test Result	Description/ Recommendation
	FAIL	If this test fails, not all of the administered circuit packs in this switch node carrier responded with an up-link board insertion message. Check to see that administered SNI and SNC boards match the physically installed SNI and SNC boards by entering **list config carrier UUC**. The command output will show "NO BOARD" for every board that is administered, but not inserted. ■ If all administered boards are inserted, run this test again. If the error persists, follow normal escalation procedures. ■ If administration does not match the physical configuration, and is *correct*, insert the missing circuit packs in this switch node carrier. ■ If administration does not match the physical configuration, and is *incorrect*, change the administration and run this test again. ■ If *none* of the administered boards in this switch node carrier were inserted, fix any other SN-CONF errors by following the associated repair procedures for SN- CONF. Use **display errors** with category **pnc** to view SN-CONF errors. Next check if any INLs, LNLs, or RNLs are down with **list sys-link**. If any INLs, LNLs, or RNLs are down, refer to the SYS-LINK section for fixing link problems.
	PASS	If this test passes, all of the administered circuit packs in this switch node carrier were inserted.

SNC-BD (Switch Node Clock Circuit Pack)

MO Name As It Appears in Alarm Log	Alarm Level	Initial System Technician Command to Run (a)	Full Name of MO
SNC-BD	MAJOR	test board UUCSS s	SNC Circuit Pack
SNC-BD	MINOR	test board UUCSS s	SNC Circuit Pack

a. UU is the universal cabinet number (1 for PPN, 2 - 44 for EPNs). C is the carrier designation (A, B, C, D, or E). SS is the number of the slot in which the circuit pack resides (10 or 12).

The Switch Node Clock (SNC) TN572 circuit pack is part of the Center Stage Switch (CSS) configuration. It resides in a switch node carrier that alone or with other switch nodes make up a CSS. In a high reliability system (duplicated SPE, simplex PNC), each SNC is duplicated such that there are two SNCs on each switch node carrier. In a critical reliability system (duplicated SPE and PNC), each switch node is fully duplicated, and there is one SNC on each switch node carrier. SNCs are placed in slots 10 and 12 of the switch node carrier.

The active SNC communicates with each circuit pack in the switch node carrier over the serial channel bus on the backplane. In addition, the active SNC provides timing to the circuit packs in the switch node carrier via the clock busses. The active SNC uses Timing Priority Number (TPN) links with each Switch Node Interface (SNI) and the other SNC to receive and distribute TPNs. TPNs are used for setting up the correct timing distribution for the switch node carrier. The active SNC receives timing for the switch node carrier from each SNI circuit pack in the carrier and chooses the SNI with the best timing reference for the switch node carrier timing signal the SNC puts out on the clock busses. The timing reference for each SNI is derived from the fiber signal to each SNI. The active SNC chooses the SNI to receive timing from by choosing the SNI with the lowest numbered TPN which means that the SNI is closest to the system timing source. The active SNC also verifies that the SNI reference signal is good before using that SNI as the timing reference for the switch node carrier. The active SNC then supplies this timing over the clock busses on the backplane to all the SNI and SNC circuit packs in the carrier. For more information on timing synchronization including how the SNC fits into the overall synchronization configuration, see the SYNC section.

The SNC circuit packs are associated with three maintenance objects:

- The SNC-BD MO covers general SNC board errors and errors with the serial communication channel between the active and standby SNCs.
- The SNC-LINK MO covers errors between the active SNC and SNIs over the serial channel (aux data is 1). Also, the SNC-LINK MO covers TPN Link errors between the active SNC and SNIs (aux data is 2).
- The SNC-REF MO covers errors the active SNC detects with SNI reference signals.

SNC circuit packs are part of port network connectivity (PNC). For background information about PNC, refer to the Maintenance Architecture and Hardware Configurations chapters.

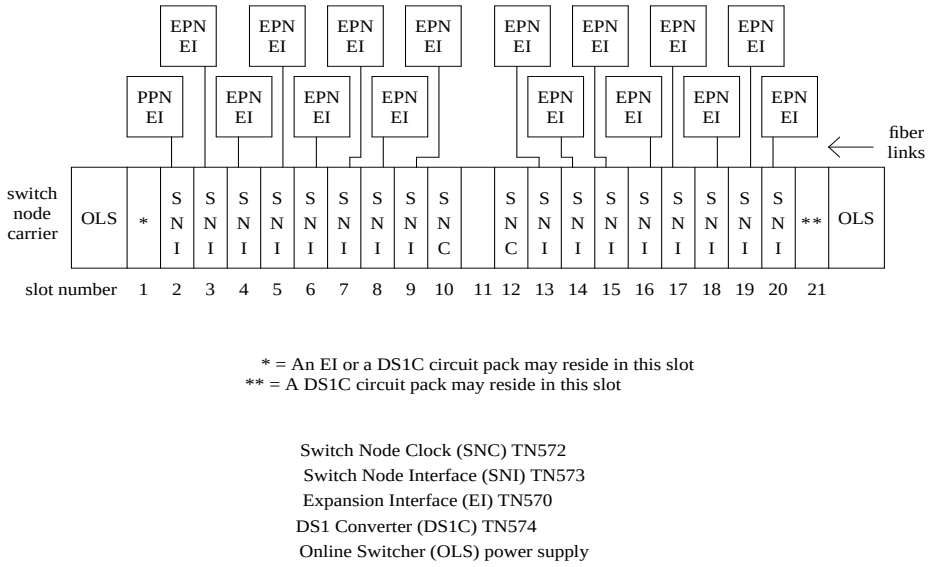

Figure 9-94. A Center Stage Switch Configuration

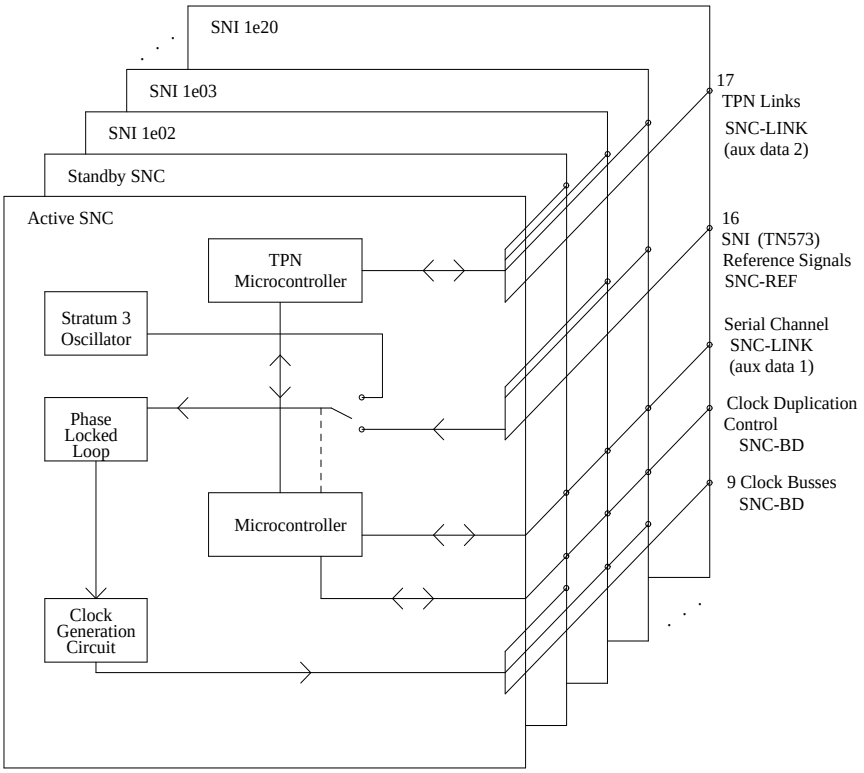

Figure 9-95. SNC Functions

SNC LEDs

SNC circuit packs have the standard red, green and yellow LEDs. The red and green LEDs operate as usual: red means an alarm condition and green indicates maintenance testing in progress. If the yellow LED is lit this indicates that the SNC is the active circuit pack, supplying timing to the carrier. In a high reliability system (duplicated SPE, simplex PNC), the standby SNC on a carrier will be unlit. In a critical reliability system (duplicated PNC), an SNC on a standby switch node carrier will be lit since it is providing timing for the standby carrier.

Clear Firmware-Counters Command

SNC firmware generates error reports independently of technician-demanded tests. Therefore, the **test board** UUCSS clear command will not affect the error status reported by firmware. The **clear firmware-counters** command will clear all firmware-generated errors unconditionally.

The **clear firmware-counters** UUCSS command sends a downlink message to the SNC circuit pack, causing it to clear out its firmware error counters and failure database. Once the firmware failure database is cleared, the failure audit test (#777) will pass. If problems still exist, the firmware will increment its error counters and the failure audit test will begin failing again.

This command should not be used as a replacement for the repair procedures associated with the hardware error log entries. This command may be useful if a problem has been fixed and off-board alarms associated with the problem are still active.

Replacing SNC Circuit Packs

WARNING:
Do not power down a Switch Node carrier to replace a circuit pack.

WARNING:
Replacing an SNC on a system with unduplicated SNCs disrupts service.

Standard Reliability System (Simplex SPE, PNC and SNCs)

This procedure is destructive. Any links through the switch node carrier will go down.

1. Pull out the SNC circuit pack to be replaced.
2. Insert a new SNC circuit pack.
3. Wait for the SNC to reset. (The red and green LEDs light and then go out. The yellow LED should be on solid.)
4. **Test alarm long clear** category **exp-intf**. **Do not busyout the Expansion Interface circuit packs.**
5. Wait 5 minutes for SNI-BD, SNI-PEER, FIBER-LK, and DS1C-BD alarms to clear, or enter **clear firmware-counters**.

High Reliability System (Duplicated SPE and SNCs, Simplex PNC)

This procedure is non-destructive.

1. If the SNC circuit pack to be replaced is the active SNC in the switch node carrier (its yellow LED will be on solid), first set the standby SNC to active via the **set switch-node-clock** command.
2. When the SNC circuit pack is in standby mode (its yellow LED is off), pull out the SNC circuit pack to be replaced.

3. Insert a new SNC circuit pack.
4. Wait for the SNC to reset. (The red and green LEDs light and then go out.) The yellow LED should be off since the SNC circuit pack is in standby mode.

Critical Reliability System (Duplicated SPE and PNC)

WARNING:
On a system with duplicated PNC, synchronization may be provided over a combination of active and standby components. This condition is indicated by an OFF-BOARD WARNING alarm against TDM-CLK with error type 2305. Repairs to standby PNC in this state may disrupt service. Otherwise, if the active PNC is functional, replacement of a standby component will not disrupt service.

STEPS:

Enter **status pnc**	Verify that the component to be replaced is on the standby PNC.
Enter **busyout pnc**	
Enter **busyout board UUCSS**	UUCSS represents the cabinet-carrier-slot address of the circuit pack to be replaced.
Replace the circuit pack	
Enter **release board UUCSS**	**CAUTION:** *Do not busyout any Expansion Interface circuit pack after this point.*
Enter **test alarms long clear** for category **exp-intf**	
Wait 5 minutes for SNI-BD, SNI-PEER, FIBER-LK, and DS1C alarms to clear, or enter **clear firmware counters <a-pnc or b-pnc>**	Use the letter designation of the pnc which holds the replaced component (the standby pnc).
Enter **status pnc**	If either PNC state-of-health is not "functional", consult the PNC-DUP section of the Maintenance Manual.
Enter **release pnc**	

SNC-BD Hardware Error Log Entries and Test to Clear Values

SNC Board Error Log Entries

Error Type	Aux Data	Associated Test	Alarm Level	On/Off Board	Test to Clear Value
0*	0	Any	Any	Any	test board UUCSS r 1
1(a)	Any	Failure Audit (#777)	MAJOR	ON	test board UUCSS r 1
18(b)	0	busyout board UCSS	WARNING	OFF	release board UCSS
257(c)	Any	Failure Audit (#777)	MAJOR	OFF	test board UUCSS r 1
513(d)	Any	Failure Audit (#777)	MINOR	OFF	test board UUCSS r 1
769(e)	Any	Failure Audit (#777)	MINOR	OFF	test board UUCSS r 1
1025(f)	Any	Failure Audit (#777)	MAJOR	ON	test board UUCSS r 1
1281(g)	Any	Failure Audit (#777)	MINOR	OFF	test board UUCSS r 1
1537(h)	Any	Failure Audit (#777)	MINOR	ON	test board UUCSS r 1
1793(i)	Any	Failure Audit (#777)	MAJOR	ON	test board UUCSS r 1
2049(j)	Any	Failure Audit (#777)	MAJOR	ON	test board UUCSS r 1

* Run the Short Test Sequence first. If all tests pass, run the Long Test Sequence. Refer to the appropriate test description and follow the recommended procedures.

Notes:

a. Error type 1 indicates SNC on-board microcontroller error. (This occurs whenever the microcontroller sanity test fails, the ROM has problems, the processor internal or external RAM is faulty, or the firmware instruction test fails. In addition, this error indicates problems with the interrupt capabilities, the dual port RAM and the RTM (Real Time Monitor) interface on the faceplate of the SNC.)

   Replace the SNC circuit pack. If the error persists, follow normal escalation procedures.

b. This error indicates that the SNC circuit pack has been busied out via the **busyout board UCSS** command. To resolve this error, release the SNC circuit pack via the **release board UCSS** command.

c. These errors occur whenever firmware detects failure of the phase-locked loop, inability to lock, or failure of the clock drivers and the problem is off-board.

   1. Enter **display errors** and if SNC-BD error type 1793 exists in the hardware error log, follow the associated repair procedures for SNC-BD error 1793.
   2. Enter **display errors** and if no SNI-BD 1025 errors exist in the error log, replace the active SNC.
   3. Enter **display errors** and if any SNI-BD 1025 errors exist in the error log, follow the associated repair procedure in the SNI-BD section for these errors.
   4. If the error persists, follow normal escalation procedures.

d. This error occurs whenever the active SNC determines that there is a problem communicating with the standby SNC via the connecting serial channel.

   If the switch node carrier is administered with duplicate SNCs:

   1. If the standby SNC (the one with its yellow LED off) has this error, escalate the problem. (**Status switch-node** will also display the active and standby SNCs.)
   2. If the system originally had duplicate SNCs and the standby SNC was removed and never replaced and the active SNC has not been reset after the standby SNC was removed, this error will occur.

      If you do not intend to replace the SNC:

      a. Remove the standby SNC from circuit pack administration via **change circuit-pack**.
      b. If the problem persists, replace the active SNC circuit pack.

      Otherwise:

      a. Insert an SNC circuit pack.

3. Check the error log via **display errors**. If SNIs in the switch node carrier also have problems communicating with the active SNC, i.e. error code 257 is logged against SNI-BD, then replace the active SNC.
4. Replace the standby SNC circuit pack.
5. Retry the **test board** command. Check the error log via **display errors**. If this error is still in the error log, replace the active SNC.
6. If the error persists, follow normal escalation procedures.

If the switch node carrier is administered with only one SNC:

1. If step 2 above does not apply, replace the SNC.
2. If the error persists, follow normal escalation procedures.

e. This error occurs whenever the standby SNC determines that there is a problem communicating with the active SNC via the connecting serial channel.

1. If the active SNC (the one with its yellow LED on) has this error, escalate the problem. (**Status switch-node** will also display the active and standby SNCs.)
2. Check the error log via **display errors**. If more than one SNI in the switch node carrier has problems communicating with the active SNC, i.e. error code 257 is logged against SNI-BD, then replace the active SNC.
3. If a single SNI has SNI-BD error 257, replace the SNI circuit pack.
4. Replace the standby SNC circuit pack.
5. Retry the **test board** command. Check the error log via **display errors**. If this error is still in the error log, replace the active SNC.
6. If the error persists, follow normal escalation procedures.

f. This error occurs when the firmware detects problems with the various hardware circuit monitors (e.g. loss of reference monitor) that verify correct operation of the reference links.

Replace the SNC circuit pack.

If the error persists, follow normal escalation procedures.

g. This error occurs when the firmware detects problems with the interface used to track the status of both SNCs when there are duplicated SNCs in a switch node carrier. When this error occurs, software may have incorrect information from SNC firmware for which SNC is active. Therefore, the yellow LEDs on the SNCs must be checked in the following repair procedure and the **status switch-node** command should not be used when this error type occurs.

If the switch node carrier has duplicate SNCs:

1. Replace the SNC that does not have its yellow LED lit.

2. Retry the **test board** command. Check the error log via **display errors**. If this error is still in the error log, replace the SNC that has its yellow LED lit.

If the switch node carrier has only one SNC, replace the SNC.

If the error persists, follow normal escalation procedures.

h. This error occurs whenever a loss of signal from the SNC on-board Stratum 3 oscillator is detected by the firmware.

Replace the SNC circuit pack.

If the error persists, follow normal escalation procedures.

i. These errors occur whenever firmware detects failure of the phase-locked loop, inability to lock, or failure of the clock drivers and the problem is on-board.

Replace the SNC circuit pack.

If the error persists, follow normal escalation procedures.

j. This error occurs when the firmware detects problems with the microcontroller used for Timing Priority Number processing.

Replace the SNC circuit pack.

If the error persists, follow normal escalation procedures.

System Technician-Demanded Tests: Descriptions and Error Codes

Always investigate tests in the order presented in the table below when inspecting errors in the system. By clearing error codes associated with the *configuration audit* for example, you may also clear errors generated from other tests in the testing sequence.

Order of Investigation	Short Test Sequence	Long Test Sequence	Reset Board Sequence	D/ND*
Configuration Audit (#759)	X	X		ND
Failure Audit(#777)	X	X		ND
Processor Route Audit(#760)		X		ND
SNC On-Board Test(#778)	X	X		ND
TPN Test(#779)	X	X		ND
Switch Node Clock Reset Test(#780)			X	D

* D = Destructive; ND = Nondestructive

NOTE:
Test #983 is not an actual demand maintenance test. This test number is used to report results of executing of the **clear firmware-counters** command. Refer to error codes for Test #777.

Configuration Audit (#759)

This test is non-destructive.

This test is run via the **test board short** or **test board long** command for SNC circuit packs.

For SNC circuit packs, this test queries the SNC for SNCs and SNIs in the same switch node carrier that the SNC can communicate with and compares this data to the administered data.

Failures of this test cause entries in the error and alarm logs against Switch Node Configuration (SN-CONF) with the board location of the SNC.

Table 9-318. TEST #759 Configuration Audit

Error Code	Test Result	Description/ Recommendation
2100	ABORT	Could not allocate the necessary system resources to run this test. 1. Retry the command at 1 minute intervals a maximum of 3 times. 2. If the test continues to abort, follow normal escalation procedures.
2300	ABORT	The downlink message necessary to run this test could not be sent. 1. Retry the command at 1 minute intervals a maximum of 3 times. 2. If the test continues to abort, follow normal escalation procedures.
2301	ABORT	The software timer could not be set before sending the downlink message necessary to run this test. 1. Retry the command at 1 minute intervals a maximum of 3 times. 2. If the test continues to abort, follow normal escalation procedures.

Continued on next page

Table 9-318. TEST #759 Configuration Audit — *Continued*

Error Code	Test Result	Description/ Recommendation
2306	ABORT	The SNC circuit pack is not responding to test requests sent by software. 1. Run the **test led switch-node** for the switch node that this board resides in to verify whether the LEDs on the board light. 2. If the LEDs on the other boards in the carrier light, but the LEDs on this board do not light, run test 760 via **test board UUCSS l** for the active SNC in this carrier. Wait 5 minutes and then try step 1 one more time. If the LEDs on this board still do not light, replace this board. Replacing an SNC may be service interrupting. Refer to the SNC-BD section for the procedure for replacing an SNC. 3. If none of the LEDs light for the boards in the same carrier as this board, fix any problems associated with the connectivity of this carrier to the SPE. Check **list fibers** to determine the fiber connections to this carrier. Check the LEDs on all SNIs and EIs and fix any fiber problems. Enter **display errors** and follow the associated repair procedures for any EXP-INTF error entries associated with the PPN. Also, follow the associated repair procedures for any SYNC, SNI-BD, SNC-BD, FIBER-LK, or SNI-PEER error entries. 4. If the test continues to abort, follow normal escalation procedures.
2500	ABORT	Internal System Error 1. Retry the command at 1 minute intervals a maximum of 3 times. 2. If the test continues to abort, follow normal escalation procedures.

Continued on next page

Table 9-318. TEST #759 Configuration Audit — *Continued*

Error Code	Test Result	Description/ Recommendation
102	FAIL	The SNC circuit pack cannot communicate with the SNI in slot 2. 1. If a standby SNC (one with its yellow LED off) was tested and resulted in this error code, follow normal escalation procedures. (**status switch-node** will also display the active and standby SNCs.) 2. Use **list configuration carrier** to determine whether an SNI is physically present in slot 2. If the `Vintage` field indicates that a circuit pack is present, proceed to step 3. If the `Vintage` field reports `no board`, do one of the following: ■ If an SNI is not supposed to be installed in slot 2: a. This failure will not affect service. The missing SNI can be removed from administration with **change circuit-pack**. b. If the error persists, reset the active SNC circuit pack with **reset board** UUCSS. If the error still persists, replace the active SNC circuit pack. ■ If an SNI is supposed to be installed in slot 2, insert one. 3. **Display errors** for category **pnc**. If the SNC has SNC-BD error 513, or SNC-LINK errors with aux data 1 pointing to other SNIs besides the one in slot 2, replace the active SNC circuit pack. 4. If SNIs in the same carrier have SNI-BD error 257 logged, (indicating they are having trouble communicating with the SNC), replace the active SNC circuit pack. 5. If the SNC being tested has SNC-LINK error type 1, replace the SNI in slot 2. Replacing an SNI may interrupt service. Refer to the SNI-BD section for the procedure for replacing an SNI. 6. If the SNC being tested still has SNC-LINK error type 1, replace the SNC circuit pack. 7. If the test continues to fail, follow normal escalation procedures.

Continued on next page

Table 9-318. TEST #759 Configuration Audit — *Continued*

Error Code	Test Result	Description/ Recommendation
103	FAIL	The SNC circuit pack cannot communicate with the SNI in slot 3. 1. If a standby SNC (one with its yellow LED off) was tested and resulted in this error code, follow normal escalation procedures. (**status switch-node** will also display the active and standby SNCs.) 2. Use **list configuration carrier** to determine whether an SNI is physically present in slot 3. If the `Vintage` field indicates that a circuit pack is present, proceed to step 3. If the `Vintage` field reports `no board`, do one of the following: ■ If an SNI is not supposed to be installed in slot 3: a. This failure will not affect service. The missing SNI can be removed from administration with **change circuit-pack**. b. If the error persists, reset the active SNC circuit pack with **reset board** UUCSS. If the error still persists, replace the active SNC circuit pack. ■ If an SNI is supposed to be installed in slot 3, insert one. 3. **Display errors** for category **pnc**. If the SNC has SNC-BD error 513, or SNC-LINK errors with aux data 1 pointing to other SNIs besides the one in slot 3, replace the active SNC circuit pack. 4. If SNIs in the same carrier have SNI-BD error 257 logged, (indicating they are having trouble communicating with the SNC), replace the active SNC circuit pack. 5. If the SNC being tested has SNC-LINK error type 257, replace the SNI in slot 3. Replacing an SNI may interrupt service. Refer to the SNI-BD section for the procedure for replacing an SNI. 6. If the SNC being tested still has SNC-LINK error type 257, replace the SNC circuit pack. 7. If the test continues to fail, follow normal escalation procedures.

Continued on next page

Table 9-318. TEST #759 Configuration Audit — *Continued*

Error Code	Test Result	Description/ Recommendation
104	FAIL	The SNC circuit pack cannot communicate with the SNI in slot 4. 1. If a standby SNC (one with its yellow LED off) was tested and resulted in this error code, follow normal escalation procedures. (**status switch-node** will also display the active and standby SNCs.) 2. Use **list configuration carrier** to determine whether an SNI is physically present in slot 4. If the `Vintage` field indicates that a circuit pack is present, proceed to step 3. If the `Vintage` field reports `no board`, do one of the following: ■ If an SNI is not supposed to be installed in slot 4: a. This failure will not affect service. The missing SNI can be removed from administration with **change circuit-pack**. b. If the error persists, reset the active SNC circuit pack with **reset board** UUCSS. If the error still persists, replace the active SNC circuit pack. ■ If an SNI is supposed to be installed in slot 4, insert one. 3. **Display errors** for category **pnc**. If the SNC has SNC-BD error 513, or SNC-LINK errors with aux data 1 pointing to other SNIs besides the one in slot 4, replace the active SNC circuit pack. 4. If SNIs in the same carrier have SNI-BD error 257 logged, (indicating they are having trouble communicating with the SNC), replace the active SNC circuit pack. 5. If the SNC being tested has SNC-LINK error type 513, replace the SNI in slot 4. Replacing an SNI may interrupt service. Refer to the SNI-BD section for the procedure for replacing an SNI. 6. If the SNC being tested still has SNC-LINK error type 513, replace the SNC circuit pack. 7. If the test continues to fail, follow normal escalation procedures.

Continued on next page

Table 9-318. TEST #759 Configuration Audit — *Continued*

Error Code	Test Result	Description/ Recommendation
105	FAIL	The SNC circuit pack cannot communicate with the SNI in slot 5. 1. If a standby SNC (one with its yellow LED off) was tested and resulted in this error code, follow normal escalation procedures. (**status switch-node** will also display the active and standby SNCs.) 2. Use **list configuration carrier** to determine whether an SNI is physically present in slot 5. If the `Vintage` field indicates that a circuit pack is present, proceed to step 3. If the `Vintage` field reports `no board`, do one of the following: ■ If an SNI is not supposed to be installed in slot 5: a. This failure will not affect service. The missing SNI can be removed from administration with **change circuit-pack**. b. If the error persists, reset the active SNC circuit pack with **reset board UUCSS**. If the error still persists, replace the active SNC circuit pack. ■ If an SNI is supposed to be installed in slot 5, insert one. 3. **Display errors** for category **pnc**. If the SNC has SNC-BD error 513, or SNC-LINK errors with aux data 1 pointing to other SNIs besides the one in slot 5, replace the active SNC circuit pack. 4. If SNIs in the same carrier have SNI-BD error 257 logged, (indicating they are having trouble communicating with the SNC), replace the active SNC circuit pack. 5. If the SNC being tested has SNC-LINK error type 769, replace the SNI in slot 5. Replacing an SNI may interrupt service. Refer to the SNI-BD section for the procedure for replacing an SNI. 6. If the SNC being tested still has SNC-LINK error type 769, replace the SNC circuit pack. 7. If the test continues to fail, follow normal escalation procedures.

Continued on next page

Table 9-318. TEST #759 Configuration Audit — *Continued*

Error Code	Test Result	Description/ Recommendation
106	FAIL	The SNC circuit pack cannot communicate with the SNI in slot 6. 1. If a standby SNC (one with its yellow LED off) was tested and resulted in this error code, follow normal escalation procedures. (**status switch-node** will also display the active and standby SNCs.) 2. Use **list configuration carrier** to determine whether an SNI is physically present in slot 6. If the `Vintage` field indicates that a circuit pack is present, proceed to step 3. If the `Vintage` field reports `no board`, do one of the following: ■ If an SNI is not supposed to be installed in slot 6: a. This failure will not affect service. The missing SNI can be removed from administration with **change circuit-pack**. b. If the error persists, reset the active SNC circuit pack with **reset board UUCSS**. If the error still persists, replace the active SNC circuit pack. ■ If an SNI is supposed to be installed in slot 6, insert one. 3. **Display errors** for category **pnc**. If the SNC has SNC-BD error 513, or SNC-LINK errors with aux data 1 pointing to other SNIs besides the one in slot 6, replace the active SNC circuit pack. 4. If SNIs in the same carrier have SNI-BD error 257 logged, (indicating they are having trouble communicating with the SNC), replace the active SNC circuit pack. 5. If the SNC being tested has SNC-LINK error type 1025, replace the SNI in slot 6. Replacing an SNI may interrupt service. Refer to the SNI-BD section for the procedure for replacing an SNI. 6. If the SNC being tested still has SNC-LINK error type 1025, replace the SNC circuit pack. 7. If the test continues to fail, follow normal escalation procedures.

Continued on next page

Table 9-318. TEST #759 Configuration Audit — *Continued*

Error Code	Test Result	Description/ Recommendation
107	FAIL	The SNC circuit pack cannot communicate with the SNI in slot 7. 1. If a standby SNC (one with its yellow LED off) was tested and resulted in this error code, follow normal escalation procedures. (**status switch-node** will also display the active and standby SNCs.) 2. Use **list configuration carrier** to determine whether an SNI is physically present in slot 7. If the `Vintage` field indicates that a circuit pack is present, proceed to step 3. If the `Vintage` field reports `no board`, do one of the following: ■ If an SNI is not supposed to be installed in slot 7: a. This failure will not affect service. The missing SNI can be removed from administration with **change circuit-pack**. b. If the error persists, reset the active SNC circuit pack with **reset board UUCSS**. If the error still persists, replace the active SNC circuit pack. ■ If an SNI is supposed to be installed in slot 7, insert one. 3. **Display errors** for category **pnc**. If the SNC has SNC-BD error 513, or SNC-LINK errors with aux data 1 pointing to other SNIs besides the one in slot 7, replace the active SNC circuit pack. 4. If SNIs in the same carrier have SNI-BD error 257 logged, (indicating they are having trouble communicating with the SNC), replace the active SNC circuit pack. 5. If the SNC being tested has SNC-LINK error type 1281, replace the SNI in slot 7. Replacing an SNI may interrupt service. Refer to the SNI-BD section for the procedure for replacing an SNI. 6. If the SNC being tested still has SNC-LINK error type 1281, replace the SNC circuit pack. 7. If the test continues to fail, follow normal escalation procedures.

Continued on next page

Table 9-318. TEST #759 Configuration Audit — *Continued*

Error Code	Test Result	Description/ Recommendation
108	FAIL	The SNC circuit pack cannot communicate with the SNI in slot 8. 1. If a standby SNC (one with its yellow LED off) was tested and resulted in this error code, follow normal escalation procedures. (**status switch-node** will also display the active and standby SNCs.) 2. Use **list configuration carrier** to determine whether an SNI is physically present in slot 8. If the `Vintage` field indicates that a circuit pack is present, proceed to step 3. If the `Vintage` field reports `no board`, do one of the following: ■ If an SNI is not supposed to be installed in slot 8: a. This failure will not affect service. The missing SNI can be removed from administration with **change circuit-pack**. b. If the error persists, reset the active SNC circuit pack with **reset board UUCSS**. If the error still persists, replace the active SNC circuit pack. ■ If an SNI is supposed to be installed in slot 8, insert one. 3. **Display errors** for category **pnc**. If the SNC has SNC-BD error 513, or SNC-LINK errors with aux data 1 pointing to other SNIs besides the one in slot 8, replace the active SNC circuit pack. 4. If SNIs in the same carrier have SNI-BD error 257 logged, (indicating they are having trouble communicating with the SNC), replace the active SNC circuit pack. 5. If the SNC being tested has SNC-LINK error type 1537, replace the SNI in slot 8. Replacing an SNI may interrupt service. Refer to the SNI-BD section for the procedure for replacing an SNI. 6. If the SNC being tested still has SNC-LINK error type 1537, replace the SNC circuit pack. 7. If the test continues to fail, follow normal escalation procedures.

Continued on next page

Table 9-318. TEST #759 Configuration Audit — *Continued*

Error Code	Test Result	Description/ Recommendation
109	FAIL	The SNC circuit pack cannot communicate with the SNI in slot 9. 1. If a standby SNC (one with its yellow LED off) was tested and resulted in this error code, follow normal escalation procedures. (**status switch-node** will also display the active and standby SNCs.) 2. Use **list configuration carrier** to determine whether an SNI is physically present in slot 9. If the `Vintage` field indicates that a circuit pack is present, proceed to step 3. If the `Vintage` field reports `no board`, do one of the following: ■ If an SNI is not supposed to be installed in slot 9: a. This failure will not affect service. The missing SNI can be removed from administration with **change circuit-pack**. b. If the error persists, reset the active SNC circuit pack with **reset board UUCSS**. If the error still persists, replace the active SNC circuit pack. ■ If an SNI is supposed to be installed in slot 9, insert one. 3. **Display errors** for category **pnc**. If the SNC has SNC-BD error 513, or SNC-LINK errors with aux data 1 pointing to other SNIs besides the one in slot 9, replace the active SNC circuit pack. 4. If SNIs in the same carrier have SNI-BD error 257 logged, (indicating they are having trouble communicating with the SNC), replace the active SNC circuit pack. 5. If the SNC being tested has SNC-LINK error type 1793, replace the SNI in slot 9. Replacing an SNI may interrupt service. Refer to the SNI-BD section for the procedure for replacing an SNI. 6. If the SNC being tested still has SNC-LINK error type 1793, replace the SNC circuit pack. 7. If the test continues to fail, follow normal escalation procedures.

Continued on next page

Table 9-318. TEST #759 Configuration Audit — *Continued*

Error Code	Test Result	Description/ Recommendation
112	FAIL	The SNC circuit pack cannot communicate with the other SNC. **If this test was run on the active SNC and if the switch node carrier is administered with duplicate SNCs:** 1. If the system originally had duplicate SNCs and the standby SNC was removed and never replaced, this error will occur. *If you do not intend to replace the SNC:* a. Remove the standby SNC from circuit pack administration via **change circuit-pack**. b. If the problem persists, reset the active SNC circuit pack via **reset board UUCSS**. If the problem persists after the reset, replace the active SNC circuit pack. 2. Check the error log via **display errors**. If SNIs in the switch node carrier also have problems communicating with the active SNC, i.e. error code 257 is logged against SNI-BD, then replace the active SNC. 3. Replace the standby SNC circuit pack. 4. Retry the **test board** command. If this test continues to fail, replace the active SNC. 5. If this test continues to fail, follow normal escalation procedures. **If this test was run on the active SNC and if the switch node carrier is administered with only one SNC:** 1. Replace the SNC. 2. If this test continues to fail, follow normal escalation procedures.

Continued on next page

Table 9-318. TEST #759 Configuration Audit — *Continued*

Error Code	Test Result	Description/ Recommendation
112	FAIL *(cont'd.)*	**If this test was run on the standby SNC:** 1. Check the error log via **display errors**. If more than one SNI in the switch node carrier has problems communicating with the active SNC, i.e. error code 257 is logged against SNI-BD, then replace the active SNC. 2. Replace the standby SNC circuit pack. 3. Retry the **test board** command. Check the error log via **display errors**. If this error is still in the error log, replace the active SNC. 4. If this test continues to fail, follow normal escalation procedures.

Continued on next page

Table 9-318. TEST #759 Configuration Audit — *Continued*

Error Code	Test Result	Description/ Recommendation
113	FAIL	The SNC circuit pack cannot communicate with the SNI in slot 13. 1. If a standby SNC (one with its yellow LED off) was tested and resulted in this error code, follow normal escalation procedures. (**status switch-node** will also display the active and standby SNCs.) 2. Use **list configuration carrier** to determine whether an SNI is physically present in slot 13. If the `Vintage` field indicates that a circuit pack is present, proceed to step 3. If the `Vintage` field reports `no board`, do one of the following: If an SNI is not supposed to be installed in slot 13: a. This failure will not affect service. The missing SNI can be removed from administration with **change circuit-pack**. b. If the error persists, reset the active SNC circuit pack with **reset board** UUCSS. If the error still persists, replace the active SNC circuit pack. If an SNI is supposed to be installed in slot 13, insert one. 3. **Display errors** for category **pnc**. If the SNC has SNC-BD error 513, or SNC-LINK errors with aux data 1 pointing to other SNIs besides the one in slot 13, replace the active SNC circuit pack. 4. If SNIs in the same carrier have SNI-BD error 257 logged, (indicating they are having trouble communicating with the SNC), replace the active SNC circuit pack. 5. If the SNC being tested has SNC-LINK error type 2049, replace the SNI in slot 13. Replacing an SNI may interrupt service. Refer to the SNI-BD section for the procedure for replacing an SNI. 6. If the SNC being tested still has SNC-LINK error type 2049, replace the SNC circuit pack. 7. If the test continues to fail, follow normal escalation procedures.

Continued on next page

Table 9-318. TEST #759 Configuration Audit — *Continued*

Error Code	Test Result	Description/ Recommendation
114	FAIL	The SNC circuit pack cannot communicate with the SNI in slot 14. 1. If a standby SNC (one with its yellow LED off) was tested and resulted in this error code, follow normal escalation procedures. (**status switch-node** will also display the active and standby SNCs.) 2. Use **list configuration carrier** to determine whether an SNI is physically present in slot 14. If the `Vintage` field indicates that a circuit pack is present, proceed to step 3. If the `Vintage` field reports `no board`, do one of the following: If an SNI is not supposed to be installed in slot 14: a. This failure will not affect service. The missing SNI can be removed from administration with **change circuit-pack**. b. If the error persists, reset the active SNC circuit pack with **reset board** UUCSS. If the error still persists, replace the active SNC circuit pack. If an SNI is supposed to be installed in slot 14, insert one. 3. **Display errors** for category **pnc**. If the SNC has SNC-BD error 513, or SNC-LINK errors with aux data 1 pointing to other SNIs besides the one in slot 14, replace the active SNC circuit pack. 4. If SNIs in the same carrier have SNI-BD error 257 logged, (indicating they are having trouble communicating with the SNC), replace the active SNC circuit pack. 5. If the SNC being tested has SNC-LINK error type 2305, replace the SNI in slot 14. Replacing an SNI may interrupt service. Refer to the SNI-BD section for the procedure for replacing an SNI. 6. If the SNC being tested still has SNC-LINK error type 2305, replace the SNC circuit pack. 7. If the test continues to fail, follow normal escalation procedures.

Continued on next page

Table 9-318. TEST #759 Configuration Audit — *Continued*

Error Code	Test Result	Description/ Recommendation
115	FAIL	The SNC circuit pack cannot communicate with the SNI in slot 15. 1. If a standby SNC (one with its yellow LED off) was tested and resulted in this error code, follow normal escalation procedures. (**status switch-node** will also display the active and standby SNCs.) 2. Use **list configuration carrier** to determine whether an SNI is physically present in slot 15. If the `Vintage` field indicates that a circuit pack is present, proceed to step 3. If the `Vintage` field reports `no board`, do one of the following: If an SNI is not supposed to be installed in slot 15: a. This failure will not affect service. The missing SNI can be removed from administration with **change circuit-pack**. b. If the error persists, reset the active SNC circuit pack with **reset board** UUCSS. If the error still persists, replace the active SNC circuit pack. If an SNI is supposed to be installed in slot 15, insert one. 3. **Display errors** for category **pnc**. If the SNC has SNC-BD error 513, or SNC-LINK errors with aux data 1 pointing to other SNIs besides the one in slot 15, replace the active SNC circuit pack. 4. If SNIs in the same carrier have SNI-BD error 257 logged, (indicating they are having trouble communicating with the SNC), replace the active SNC circuit pack. 5. If the SNC being tested has SNC-LINK error type 2561, replace the SNI in slot 15. Replacing an SNI may interrupt service. Refer to the SNI-BD section for the procedure for replacing an SNI. 6. If the SNC being tested still has SNC-LINK error type 2561, replace the SNC circuit pack. 7. If the test continues to fail, follow normal escalation procedures.

Continued on next page

Table 9-318. TEST #759 Configuration Audit — *Continued*

Error Code	Test Result	Description/ Recommendation
116	FAIL	The SNC circuit pack cannot communicate with the SNI in slot 16. 1. If a standby SNC (one with its yellow LED off) was tested and resulted in this error code, follow normal escalation procedures. (**status switch-node** will also display the active and standby SNCs.) 2. Use **list configuration carrier** to determine whether an SNI is physically present in slot 16. If the `Vintage` field indicates that a circuit pack is present, proceed to step 3. If the `Vintage` field reports `no board`, do one of the following: If an SNI is not supposed to be installed in slot 16: a. This failure will not affect service. The missing SNI can be removed from administration with **change circuit-pack**. b. If the error persists, reset the active SNC circuit pack with **reset board** UUCSS. If the error still persists, replace the active SNC circuit pack. If an SNI is supposed to be installed in slot 16, insert one. 3. **Display errors** for category **pnc**. If the SNC has SNC-BD error 513, or SNC-LINK errors with aux data 1 pointing to other SNIs besides the one in slot 16, replace the active SNC circuit pack. 4. If SNIs in the same carrier have SNI-BD error 257 logged, (indicating they are having trouble communicating with the SNC), replace the active SNC circuit pack. 5. If the SNC being tested has SNC-LINK error type 2817, replace the SNI in slot 16. Replacing an SNI may interrupt service. Refer to the SNI-BD section for the procedure for replacing an SNI. 6. If the SNC being tested still has SNC-LINK error type 2817, replace the SNC circuit pack. 7. If the test continues to fail, follow normal escalation procedures.

Continued on next page

Table 9-318. TEST #759 Configuration Audit — *Continued*

Error Code	Test Result	Description/ Recommendation
117	FAIL	The SNC circuit pack cannot communicate with the SNI in slot 17. 1. If a standby SNC (one with its yellow LED off) was tested and resulted in this error code, follow normal escalation procedures. (**status switch-node** will also display the active and standby SNCs.) 2. Use **list configuration carrier** to determine whether an SNI is physically present in slot 17. If the `Vintage` field indicates that a circuit pack is present, proceed to step 3. If the `Vintage` field reports `no board`, do one of the following: If an SNI is not supposed to be installed in slot 17: a. This failure will not affect service. The missing SNI can be removed from administration with **change circuit-pack**. b. If the error persists, reset the active SNC circuit pack with **reset board** UUCSS. If the error still persists, replace the active SNC circuit pack. If an SNI is supposed to be installed in slot 17, insert one. 3. **Display errors** for category **pnc**. If the SNC has SNC-BD error 513, or SNC-LINK errors with aux data 1 pointing to other SNIs besides the one in slot 17, replace the active SNC circuit pack. 4. If SNIs in the same carrier have SNI-BD error 257 logged, (indicating they are having trouble communicating with the SNC), replace the active SNC circuit pack. 5. If the SNC being tested has SNC-LINK error type 3073, replace the SNI in slot 17. Replacing an SNI may interrupt service. Refer to the SNI-BD section for the procedure for replacing an SNI. 6. If the SNC being tested still has SNC-LINK error type 3073, replace the SNC circuit pack. 7. If the test continues to fail, follow normal escalation procedures.

Continued on next page

Table 9-318. TEST #759 Configuration Audit — *Continued*

Error Code	Test Result	Description/ Recommendation
118	FAIL	The SNC circuit pack cannot communicate with the SNI in slot 18. 1. If a standby SNC (one with its yellow LED off) was tested and resulted in this error code, follow normal escalation procedures. (**status switch-node** will also display the active and standby SNCs.) 2. Use **list configuration carrier** to determine whether an SNI is physically present in slot 18. If the `Vintage` field indicates that a circuit pack is present, proceed to step 3. If the `Vintage` field reports `no board`, do one of the following: If an SNI is not supposed to be installed in slot 18: a. This failure will not affect service. The missing SNI can be removed from administration with **change circuit-pack**. b. If the error persists, reset the active SNC circuit pack with **reset board** UUCSS. If the error still persists, replace the active SNC circuit pack. If an SNI is supposed to be installed in slot 18, insert one. 3. **Display errors** for category **pnc**. If the SNC has SNC-BD error 513, or SNC-LINK errors with aux data 1 pointing to other SNIs besides the one in slot 18, replace the active SNC circuit pack. 4. If SNIs in the same carrier have SNI-BD error 257 logged, (indicating they are having trouble communicating with the SNC), replace the active SNC circuit pack. 5. If the SNC being tested has SNC-LINK error type 3329, replace the SNI in slot 18. Replacing an SNI may interrupt service. Refer to the SNI-BD section for the procedure for replacing an SNI. 6. If the SNC being tested still has SNC-LINK error type 3329, replace the SNC circuit pack. 7. If the test continues to fail, follow normal escalation procedures.

Continued on next page

Table 9-318. TEST #759 Configuration Audit — *Continued*

Error Code	Test Result	Description/ Recommendation
119	FAIL	The SNC circuit pack cannot communicate with the SNI in slot 19. 1. If a standby SNC (one with its yellow LED off) was tested and resulted in this error code, follow normal escalation procedures. (**status switch-node** will also display the active and standby SNCs.) 2. Use **list configuration carrier** to determine whether an SNI is physically present in slot 19. If the `Vintage` field indicates that a circuit pack is present, proceed to step 3. If the `Vintage` field reports `no board`, do one of the following: If an SNI is not supposed to be installed in slot 19: a. This failure will not affect service. The missing SNI can be removed from administration with **change circuit-pack**. b. If the error persists, reset the active SNC circuit pack with **reset board** UUCSS. If the error still persists, replace the active SNC circuit pack. If an SNI is supposed to be installed in slot 19, insert one. 3. **Display errors** for category **pnc**. If the SNC has SNC-BD error 513, or SNC-LINK errors with aux data 1 pointing to other SNIs besides the one in slot 19, replace the active SNC circuit pack. 4. If SNIs in the same carrier have SNI-BD error 257 logged, (indicating they are having trouble communicating with the SNC), replace the active SNC circuit pack. 5. If the SNC being tested has SNC-LINK error type 3585, replace the SNI in slot 19. Replacing an SNI may interrupt service. Refer to the SNI-BD section for the procedure for replacing an SNI. 6. If the SNC being tested still has SNC-LINK error type 3585, replace the SNC circuit pack. 7. If the test continues to fail, follow normal escalation procedures.

Continued on next page

Table 9-318. TEST #759 Configuration Audit — *Continued*

Error Code	Test Result	Description/ Recommendation
120	FAIL	The SNC circuit pack cannot communicate with the SNI in slot 20. 1. If a standby SNC (one with its yellow LED off) was tested and resulted in this error code, follow normal escalation procedures. (**status switch-node** will also display the active and standby SNCs.) 2. Use **list configuration carrier** to determine whether an SNI is physically present in slot 20. If the `Vintage` field indicates that a circuit pack is present, proceed to step 3. If the `Vintage` field reports `no board`, do one of the following: If an SNI is not supposed to be installed in slot 20 a. This failure will not affect service. The missing SNI can be removed from administration with **change circuit-pack**. b. If the error persists, reset the active SNC circuit pack with **reset board** UUCSS. If the error still persists, replace the active SNC circuit pack. If an SNI is supposed to be installed in slot 20, insert one. 3. **Display errors** for category **pnc**. If the SNC has SNC-BD error 513, or SNC-LINK errors with aux data 1 pointing to other SNIs besides the one in slot 20, replace the active SNC circuit pack. 4. If SNIs in the same carrier have SNI-BD error 257 logged, (indicating they are having trouble communicating with the SNC), replace the active SNC circuit pack. 5. If the SNC being tested has SNC-LINK error type 3841, replace the SNI in slot 20. Replacing an SNI may interrupt service. Refer to the SNI-BD section for the procedure for replacing an SNI. 6. If the SNC being tested still has SNC-LINK error type 3841, replace the SNC circuit pack. 7. If the test continues to fail, follow normal escalation procedures.

Continued on next page

Table 9-318. TEST #759 Configuration Audit — *Continued*

Error Code	Test Result	Description/ Recommendation
	PASS	The administered data and the circuit packs the SNC can communicate with match.

Processor Route Audit Test (#760)

This test is non-destructive.

This test sends processor routes to all SNIs and SNCs in the same carrier as the SNC that the **test board UCSS** command was run for. The processor route is used for the boards to send uplink messages to the SPE and gives a sequence of boards for the message to get routed through so that the message ends up at the SPE. If the SNI and SNC boards do not have processor routes, they will not be able to send any in-line errors to the SPE.

When each individual board receives the processor routes, it sends a board insertion message uplink and software inserts that board if it has not already been inserted. Each board is sent either one or two processor routes depending on the configuration.

Use **test led** or **list config carrier** to see whether boards are inserted.

Table 9-319. TEST #760 Processor Route Audit Test

Error Code	Test Result	Description/ Recommendation
2100	ABORT	Could not allocate the necessary system resources to run this test. 1. Retry the command at 1 minute intervals a maximum of 3 times. 2. If the test continues to abort, follow normal escalation procedures.
2300	ABORT	The downlink message necessary to run this test could not be sent. 1. Retry the command at 1 minute intervals a maximum of 3 times. 2. If the test continues to abort, follow normal escalation procedures.
2301	ABORT	The software timer could not be set before sending the downlink message necessary to run this test. 1. Retry the command at 1 minute intervals a maximum of 3 times. 2. If the test continues to abort, follow normal escalation procedures.

Continued on next page

Table 9-319. TEST #760 Processor Route Audit Test — *Continued*

Error Code	Test Result	Description/ Recommendation
2306	ABORT	None of the circuit packs in this switch node carrier are responding to the processor route messages sent by software. 1. Run the **test led switch-node** for the switch node that this switch node carrier resides in to verify whether the LEDs on any of the boards light. 2. If none of the LEDs light for the boards in this carrier, fix any problems associated with the connectivity of this carrier to the SPE. Check **list fibers** to determine the fiber connections to this carrier. Check the LEDs on all SNIs and EIs and fix any fiber problems. Enter **display errors** and follow the associated repair procedures for any EXP-INTF error entries associated with the PPN. Also, follow the associated repair procedures for any SYNC, SNI-BD, SNC-BD, FIBER-LK, or SNI-PEER error entries. 3. If the test continues to abort, follow normal escalation procedures.
2500	ABORT	Internal System Error 1. Retry the command at 1 minute intervals a maximum of 3 times. 2. If the test continues to abort, follow normal escalation procedures.

Continued on next page

Table 9-319. TEST #760 Processor Route Audit Test — *Continued*

Error Code	Test Result	Description/ Recommendation
	FAIL	If this test fails, not all of the administered circuit packs in this switch node carrier responded with an up-link board insertion message. Check to see that administered SNI and SNC boards match the physically installed SNI and SNC boards by entering **list config carrier** UUC. The command output will show "NO BOARD" for every board that is administered, but not inserted. ■ If all administered boards are inserted, run this test again. If the error persists, follow normal escalation procedures. ■ If administration does not match the physical configuration, and is correct, insert the missing circuit packs in this switch node carrier. ■ If *none* of the administered boards in this switch node carrier were inserted, fix any other SN-CONF errors by following the associated repair procedures for SN-CONF. Use **display errors** with category **pnc** to view SN-CONF errors. Next check if any INLs, LNLs, or RNLs are down, refer to the SYS-LINK section for fixing link problems. If the test continues to fail, follow normal escalation procedures.
	PASS	If this test passes, all of the administered circuit packs in this switch node carrier were inserted.

Failure Audit (#777)

This test is non-destructive.

This test queries the SNC for any existing failures and any unacknowledged cleared failure messages. Each failure generates an error and alarm entry against SNC-BD, SNC-LINK, or SNC-REF. An unacknowledged cleared failure message is a message the SNC circuit pack sent to software indicating a previous failure is now gone and the SNC circuit pack did not receive a message from software indicating that the failure message was received by software.

If no failures are detected by the SNC circuit pack, this test will pass.

If this test reports failures, the results screen for the **test board** command will show **FAIL** with no FAIL code. The error log must then be displayed via **display errors** with category PNC to view all SNC related errors: SNC-BD, SNC-LINK, and SNC-REF.

Table 9-320. TEST #777 Failure Audit

Error Code	Test Result	Description/ Recommendation
	ABORT	Internal System Error 1. Retry the command at 1 minute intervals a maximum of 3 times. 2. If the test continues to abort, escalate the problem.
2100	ABORT	Could not allocate the necessary system resources to run this test. 1. Retry the command at 1 minute intervals a maximum of 3 times. 2. If the test continues to abort, follow normal escalation procedures.
2300	ABORT	The downlink message necessary to run this test could not be sent. 1. Retry the command at 1 minute intervals a maximum of 3 times. 2. If the test continues to abort, follow normal escalation procedures.

Continued on next page

Table 9-320. TEST #777 Failure Audit — *Continued*

Error Code	Test Result	Description/ Recommendation
2301	ABORT	The software timer could not be set before sending the downlink message necessary to run this test. 1. Retry the command at 1 minute intervals a maximum of 3 times. 2. If the test continues to abort, follow normal escalation procedures.
2306	ABORT	The SNC circuit pack is not responding to test requests sent by software. 1. Run the **test led switch-node** for the switch node that this board resides in to verify whether the LEDs on the board light. 2. If the LEDs on the other boards in the carrier light, but the LEDs on this board do not light, run test 760 via **test board UUCSS l** for the active SNC in this carrier. Wait 5 minutes and then try step 1 one more time. If the LEDs on this board still do not light, replace this board. Replacing an SNC may be service interrupting. Refer to the SNC-BD section for the procedure for replacing an SNC. 3. If none of the LEDs light for the boards in the same carrier as this board, fix any problems associated with the connectivity of this carrier to the SPE. Check **list fibers** to determine the fiber connections to this carrier. Check the LEDs on all SNIs and EIs and fix any fiber problems. Enter **display errors** and follow the associated repair procedures for any EXP-INTF error entries associated with the PPN. Also, follow the associated repair procedures for any SYNC, SNI-BD, SNC-BD, FIBER-LK, or SNI-PEER error entries. 4. If the test continues to abort, follow normal escalation procedures.

Continued on next page

Table 9-320. TEST #777 Failure Audit — *Continued*

Error Code	Test Result	Description/ Recommendation
	FAIL	The SNC circuit pack reported failures or retransmitted a cleared failure message. 1. Check the error and alarm logs for SNC-BD, SNC-LINK, or SNC-REF entries. Use the **display errors** and **display alarms** commands with category PNC. Fix any problems found by referring to the SNC Board, SNC Link, or SNC Reference Error Log Entries tables in this section and follow the associated repair procedures. 2. If no SNC-BD, SNC-LINK, or SNC-REF errors exist in the error and alarm logs, retry the command. 3. If the test continues to fail, follow normal escalation procedures.
	PASS	No problems are detected on the board.

SNC On-Board Test (#778)

This test is non-destructive.

This test queries the SNC circuit pack for status of the background tests run on-board. These background tests include an SNC on-board microcontroller test, clock test, an SNC on-board Stratum 3 oscillator test, and TPN microcontroller test.

Table 9-321. TEST #778 SNC On-Board Test

Error Code	Test Result	Description/ Recommendation
2100	ABORT	Could not allocate the necessary system resources to run this test. 1. Retry the command at 1 minute intervals a maximum of 3 times. 2. If the test continues to abort, follow normal escalation procedures.
2300	ABORT	The downlink message necessary to run this test could not be sent. 1. Retry the command at 1 minute intervals a maximum of 3 times. 2. If the test continues to abort, follow normal escalation procedures.
2301	ABORT	The software timer could not be set before sending the downlink message necessary to run this test. 1. Retry the command at 1 minute intervals a maximum of 3 times. 2. If the test continues to abort, follow normal escalation procedures.
2303	ABORT	The SNC circuit pack claims that the test requested by software is invalid. 1. Retry the command at 1 minute intervals a maximum of 3 times. 2. If the test continues to abort, follow normal escalation procedures.

Continued on next page

Table 9-321. TEST #778 SNC On-Board Test — *Continued*

Error Code	Test Result	Description/ Recommendation
2304	ABORT	SNC firmware is not able to run the test. 1. Retry the command at 1 minute intervals a maximum of 3 times. 2. If the test continues to abort, follow normal escalation procedures.
2306	ABORT	The SNC circuit pack is not responding to test requests sent by software. 1. Run the **test led switch-node** for the switch node that this board resides in to verify whether the LEDs on the board light. 2. If the LEDs on the other boards in the carrier light, but the LEDs on this board do not light, run test 760 via **test board UUCSS l** for the active SNC in this carrier. Wait 5 minutes and then try step 1 one more time. If the LEDs on this board still do not light, replace this board. Replacing an SNC may be service interrupting. Refer to the SNC-BD section for the procedure for replacing an SNC. 3. If none of the LEDs light for the boards in the same carrier as this board, fix any problems associated with the connectivity of this carrier to the SPE. Check **list fibers** to determine the fiber connections to this carrier. Check the LEDs on all SNIs and EIs and fix any fiber problems. Enter **display errors** and follow the associated repair procedures for any EXP-INTF error entries associated with the PPN. Also, follow the associated repair procedures for any SYNC, SNI-BD, SNC-BD, FIBER-LK, or SNI-PEER error entries. 4. If the test continues to abort, follow normal escalation procedures.
101	FAIL	The SNC circuit pack has on-board microcontroller failure. Replace the SNC circuit pack. If the test continues to fail, follow normal escalation procedures.

Continued on next page

Table 9-321. TEST #778 SNC On-Board Test — *Continued*

Error Code	Test Result	Description/ Recommendation
128	FAIL	The SNC circuit pack has a problem with its clock; firmware has detected a phase-locked loop failure, an inability to lock, or a failure of the clock drivers. Replace the SNC circuit pack. If the test continues to fail, follow normal escalation procedures.
129	FAIL	The SNC circuit pack has a problem with the SNC on-board Stratum 3 oscillator. Replace the SNC circuit pack. If the test continues to fail, follow normal escalation procedures.
130	FAIL	The SNC circuit pack has a problem with the TPN microcontroller. Replace the SNC circuit pack. If the test continues to fail, follow normal escalation procedures.
	PASS	No problems exist with the on-board functions verified by this test.

TPN Test (#779)

This test is non-destructive.

This test queries the SNC circuit pack for status of the ROM and internal RAM background tests for the TPN microcontroller.

Table 9-322. TEST #779 TPN Test

Error Code	Test Result	Description/ Recommendation
2100	ABORT	Could not allocate the necessary system resources to run this test. 1. Retry the command at 1 minute intervals a maximum of 3 times. 2. If the test continues to abort, follow normal escalation procedures.
2300	ABORT	The downlink message necessary to run this test could not be sent. 1. Retry the command at 1 minute intervals a maximum of 3 times. 2. If the test continues to abort, follow normal escalation procedures.
2301	ABORT	The software timer could not be set before sending the downlink message necessary to run this test. 1. Retry the command at 1 minute intervals a maximum of 3 times. 2. If the test continues to abort, follow normal escalation procedures.
2302	ABORT	Software received an unexpected message data from the SNC circuit pack. 1. Retry the command at 1 minute intervals a maximum of 3 times. 2. If the test continues to abort, follow normal escalation procedures.

Continued on next page

Table 9-322. TEST #779 TPN Test — *Continued*

Error Code	Test Result	Description/ Recommendation
2303	ABORT	The SNC circuit pack claims that the test requested by software is invalid. 1. Retry the command at 1 minute intervals a maximum of 3 times. 2. If the test continues to abort, follow normal escalation procedures.
2304	ABORT	SNC firmware is not able to run the test. 1. Retry the command at 1 minute intervals a maximum of 3 times. 2. If the test continues to abort, follow normal escalation procedures.

Continued on next page

Table 9-322. TEST #779 TPN Test — *Continued*

Error Code	Test Result	Description/ Recommendation
2306	ABORT	The SNC circuit pack is not responding to test requests sent by software. 1. Run the **test led switch-node** for the switch node that this board resides in to verify whether the LEDs on the board light. 2. If the LEDs on the other boards in the carrier light, but the LEDs on this board do not light, run test 760 via **test board UUCSS l** for the active SNC in this carrier. Wait 5 minutes and then try step 1 one more time. If the LEDs on this board still do not light, replace this board. Replacing an SNC may be service interrupting. Refer to the SNC-BD section for the procedure for replacing an SNC. 3. If none of the LEDs light for the boards in the same carrier as this board, fix any problems associated with the connectivity of this carrier to the SPE. Check **list fibers** to determine the fiber connections to this carrier. Check the LEDs on all SNIs and EIs and fix any fiber problems. Enter **display errors** and follow the associated repair procedures for any EXP-INTF error entries associated with the PPN. Also, follow the associated repair procedures for any SYNC, SNI-BD, SNC-BD, FIBER-LK, or SNI-PEER error entries. 4. If the test continues to abort, follow normal escalation procedures.
	FAIL	The test failed. Replace the SNC circuit pack. If the test continues to fail, follow normal escalation procedures.
	PASS	No problems exist with the TPN microcontroller.

Switch Node Clock Reset Test (#780)

This test is destructive.

This test resets the SNC circuit pack via the **reset board UUCSS** command when an SNC circuit pack location is entered. If the system has PNC duplication, the active SNC on the active PNC cannot be reset.

If the SNC is active and the **reset board** command is executed, an SNI in the same carrier as the SNC will be told by software to reset the SNC via the TPN link. If no inserted SNIs in the same carrier as the SNC can successfully reset the SNC, software will send a reset message directly to the SNC. Software first tries to reset the SNC via an SNI in case the SNC is insane because the latter method (sending the reset message directly to the SNC) will not work if the SNC is insane.

If an active SNC is reset and a standby SNC exists in the same switch node carrier, the standby SNC will become active. The **reset board** command should not be used to make a standby SNC active. Instead, the **set switch-node-clock UUCSS** command should be used.

If the SNC is standby and the **reset board** command is executed, the active SNC is told by software to reset the standby SNC via the TPN link.

An SNC should be reset instead of reseating the circuit pack. The **reset board** command should almost never be used on an SNC. It may be necessary to use the **reset board** command if the SNC circuit pack gets into a mode where it cannot communicate with software.

Table 9-323. TEST #780 Switch Node Clock Reset Test

Error Code	Test Result	Description/ Recommendation
2100	ABORT	Could not allocate the necessary system resources to run this test. 1. Retry the command at 1 minute intervals a maximum of 3 times. 2. If the test continues to abort, follow normal escalation procedures.
2300	ABORT	The downlink message necessary to run this test could not be sent. 1. Retry the command at 1 minute intervals a maximum of 3 times. 2. If the test still aborts, follow normal escalation procedures.
2301	ABORT	The software timer could not be set before sending the downlink message necessary to run this test. 1. Retry the command at 1 minute intervals a maximum of 3 times. 2. If the test continues to abort, follow normal escalation procedures.
2302	ABORT	Software received an unexpected message from the SNC circuit pack. 1. Retry the command at 1 minute intervals a maximum of 3 times. 2. If the test continues to abort, follow normal escalation procedures.
2303	ABORT	The SNC circuit pack claims that the test requested by software is invalid. 1. Retry the command at 1 minute intervals a maximum of 3 times. 2. If the test continues to abort, follow normal escalation procedures.

Continued on next page

Table 9-323. TEST #780 Switch Node Clock Reset Test — *Continued*

Error Code	Test Result	Description/ Recommendation
2304	ABORT	SNC firmware is not able to run the test. 1. Retry the command at 1 minute intervals a maximum of 3 times. 2. If the test continues to abort, follow normal escalation procedures.
2306	ABORT	The SNC circuit pack is not responding to test requests sent by software. 1. Run the **test led switch-node** for the switch node that the SNC resides in to verify whether the LEDs on the board light. 2. If the LEDs on the other boards in the carrier light, but the LEDs on this board do not light, run test 760 via **test board UUCSS l** for the active SNC in this carrier. Wait 5 minutes and then try step 1 one more time. If the LEDs on this board still do not light, replace this board. Replacing an SNC may be service interrupting. Refer to the SNC-BD section for the procedure for replacing an SNC. 3. If none of the LEDs light for the boards in the same carrier as this board, fix any problems associated with the connectivity of this carrier to the SPE. Check **list fiber-link** to determine the fiber connections to this carrier. Check the LEDs on all SNIs and EIs and fix any fiber problems. Enter **display errors** and follow the associated repair procedures for any EXP-INTF error entries associated with the PPN. Also, follow the associated repair procedures for any SYNC, SNI-BD, SNC-BD, FIBER-LK, or SNI-PEER error entries. 4. If the test continues to abort, follow normal escalation procedures.

Continued on next page

Table 9-323. TEST #780 Switch Node Clock Reset Test — *Continued*

Error Code	Test Result	Description/ Recommendation
2500	ABORT	Internal System Error 1. Retry the command at 1-minute intervals a maximum of 3 times. 2. If the test continues to abort, follow normal escalation procedures.
	PASS	The reset message was sent out successfully to the active SNC or to an SNI. A PASS does not necessarily mean the SNC circuit pack was successfully reset. The reset can be verified by checking that the red and green LEDs turn on and then turn off. If an SNC circuit pack fails one of the firmware tests run during its reset sequence, the red LED will stay on and the circuit pack should be replaced.

Clear Firmware Counters (#983)

This test number is used to report unsuccessful results of the **clear firmware-counters** command. This is not an actual demand maintenance test. If the command aborts, refer to the error codes listed for Test #777.

SNC-LINK (Switch Node Clock Link)

MO Name As It Appears in Alarm Log	Alarm Level	Initial System Technician Command to Run (a)	Full Name of MO
SNC-LINK	MINOR	test board UUCSS s	SNC Link

a. UU is the universal cabinet number (1 for PPN, 2 - 44 for EPNs). C is the carrier designation (A, B, C, D, or E). SS is the number of the slot in which the circuit pack resides (10 or 12).

The SNC-LINK maintenance object reports errors in communications between the active Switch Node Clock and Switch Node Interfaces over the serial channel (aux data 1) and the TPN link (aux data 2). SNC-LINK errors are described on the following pages. For a complete description of SNCs and SNIs, including circuit pack replacement instructions, see maintenance objects SNI-BD and SNC-BD.

SNC-LINK Hardware Error Log Entries and Test to Clear Values

Table 9-324. SNC-LINK Hardware Error Log Entries

Error Type	Aux Data	SNI Slot†	Associated Test	Alarm Level	On/Off Board	Test to Clear Value
0*	0		Any	Any	Any	test board UUCSS r 1
1	1 (a)	2	Failure Audit (#777)	MINOR	OFF	test board UUCSS r 1
1	2 (b)	2	Failure Audit (#777)	MINOR	OFF	test board UUCSS r 1
257	1 (a)	3	Failure Audit (#777)	MINOR	OFF	test board UUCSS r 1
257	2 (b)	3	Failure Audit (#777)	MINOR	OFF	test board UUCSS r 1
513	1 (a)	4	Failure Audit (#777)	MINOR	OFF	test board UUCSS r 1
513	2 (b)	4	Failure Audit (#777)	MINOR	OFF	test board UUCSS r 1
769	1 (a)	5	Failure Audit (#777)	MINOR	OFF	test board UUCSS r 1
769	2 (b)	5	Failure Audit (#777)	MINOR	OFF	test board UUCSS r 1
1025	1 (a)	6	Failure Audit (#777)	MINOR	OFF	test board UUCSS r 1
1025	2 (b)	6	Failure Audit (#777)	MINOR	OFF	test board UUCSS r 1
1281	1 (a)	7	Failure Audit (#777)	MINOR	OFF	test board UUCSS r 1
1281	2 (b)	7	Failure Audit (#777)	MINOR	OFF	test board UUCSS r 1
1537	1 (a)	8	Failure Audit (#777)	MINOR	OFF	test board UUCSS r 1
1537	2 (b)	8	Failure Audit (#777)	MINOR	OFF	test board UUCSS r 1
1793	1 (a)	9	Failure Audit (#777)	MINOR	OFF	test board UUCSS r 1
1793	2 (b)	9	Failure Audit (#777)	MINOR	OFF	test board UUCSS r 1
2049	1 (a)	13	Failure Audit (#777)	MINOR	OFF	test board UUCSS r 1
2049	2 (b)	13	Failure Audit (#777)	MINOR	OFF	test board UUCSS r 1
2305	1 (a)	14	Failure Audit (#777)	MINOR	OFF	test board UUCSS r 1
2305	2 (b)	14	Failure Audit (#777)	MINOR	OFF	test board UUCSS r 1
2561	1 (a)	15	Failure Audit (#777)	MINOR	OFF	test board UUCSS r 1
2561	2 (b)	15	Failure Audit (#777)	MINOR	OFF	test board UUCSS r 1
2817	1 (a)	16	Failure Audit (#777)	MINOR	OFF	test board UUCSS r 1
2817	2 (b)	16	Failure Audit (#777)	MINOR	OFF	test board UUCSS r 1
3073	1 (a)	17	Failure Audit (#777)	MINOR	OFF	test board UUCSS r 1

Continued on next page

Table 9-324. SNC-LINK Hardware Error Log Entries — *Continued*

Error Type	Aux Data	SNI Slot†	Associated Test	Alarm Level	On/Off Board	Test to Clear Value
3073	2 (b)	17	Failure Audit (#777)	MINOR	OFF	test board UUCSS r 1
3329	1 (a)	18	Failure Audit (#777)	MINOR	OFF	test board UUCSS r 1
3329	2 (b)	18	Failure Audit (#777)	MINOR	OFF	test board UUCSS r 1
3585	1 (a)	19	Failure Audit (#777)	MINOR	OFF	test board UUCSS r 1
3585	2 (b)	19	Failure Audit (#777)	MINOR	OFF	test board UUCSS r 1
3841	1 (a)	20	Failure Audit (#777)	MINOR	OFF	test board UUCSS r 1
3841	2 (b)	20	Failure Audit (#777)	MINOR	OFF	test board UUCSS r 1

* Run the Short Test Sequence first. If all tests pass, run the Long Test Sequence. Refer to the appropriate test description and follow the recommended procedures.

† The location of the SNI with which the SNC cannot communicate.

Notes:

a. This error occurs whenever the active SNC determines that there is a problem communicating with an SNI circuit pack in the same carrier via the connecting multiprocessor serial channel used for transmitting CSCN messages. The slot location of the SNI with which the SNC cannot communicate is given in the error log table above.

   1. Check the error log via **display errors**.
   2. If any SNI-PEER errors exist in the hardware error log, follow the associated repair procedures for SNI-PEER errors.
   3. If the SNC has SNC-LINK errors with aux data of 1 against other SNIs and/or has SNC-BD error 513, replace the SNC circuit pack.
   4. If SNIs in the same carrier have SNI-BD error 257 logged indicating they are having trouble communicating with the SNC, replace the SNC circuit pack.
   5. Use **list configuration carrier** to determine whether an SNI is physically present in the slot pointed to by the SNC-LINK error. If the `Vintage` field indicates that a circuit pack is present, proceed to step 6. If the `Vintage` field reports `no board`, do one of the following:
      - If an SNI is not supposed to be installed in this slot:
      - Remove the SNI from circuit pack administration with **change circuit-pack**.
      - If the error remains, readminister the SNI circuit pack and then remove it from administration again.
      - If the error still remains, replace the active SNC circuit pack.
      - If an SNI should be installed in this slot, but is missing, insert an SNI circuit pack.
   6. Replace the SNI that the SNC is complaining about.
   7. Retry the command. If this error is still in the error log, continue with the following steps.
   8. Replace the SNC circuit pack.
   9. If a standby SNC (the one with its yellow LED off) has this error, escalate the problem. (**Status switch-node** will also display the active and standby SNCs.)
   10. Retry the command. If this error is still in the error log, escalate the problem.

b. This error occurs whenever the active SNC determines that there is a problem communicating with an SNI circuit pack in the same carrier via the TPN communication channel. The slot location of the SNI with which the SNC cannot communicate is given in the error log table above.

1. Check the error log via **display errors**. If more than one SNIs in the same carrier have SNI-BD errors with error type 769, replace the SNC.
2. Check the error log via **display errors**. If the SNC has more than one SNC-LINK error with aux data of 2, replace the SNC.
3. Verify that the SNI the SNC is complaining about exists in the slot indicated by the error code. If the SNI does not exist:

   If you do not intend to replace the SNI:

   a. Remove the SNI from circuit pack administration via **change circuit-pack**.

   b. If the error remains, readminister the SNI circuit pack and then remove it from administration again.

   c. If the problem persists, replace the active SNC circuit pack.

   Otherwise:

   a. Insert an SNI circuit pack.

   If this step does not apply, continue with the following steps.
4. Replace the SNI circuit pack that the SNC is complaining about.
5. Retry the command. If this error is still in the error log, continue with the following steps.
6. Replace the SNC circuit pack.
7. If a standby SNC (the one with its yellow LED off) has this error, escalate the problem. (**Status switch-node** will also display the active and standby SNCs.)
8. Retry the command. If this error is still in the error log, escalate the problem.

System Technician-Demanded Tests: Descriptions and Error Codes

Always investigate tests in the order presented in the table below when inspecting errors in the system. By clearing error codes associated with the *configuration audit* for example, you may also clear errors generated from other tests in the testing sequence.

Order of Investigation	Short Test Sequence	Long Test Sequence	Reset Board Sequence	D/ND*
Configuration Audit (#759)	X	X		ND
Failure Audit(#777)	X	X		ND
Processor Route Audit(#760)		X		ND
SNC On-Board Test(#778)	X	X		ND
TPN test(#779)	X	X		ND
Switch Node Clock Reset Test(#780)			X	D

* D = Destructive; ND = Nondestructive

Refer to maintenance object SNC-BD for descriptions of tests and results.

SNC-REF (Switch Node Clock Reference)

MO Name As It Appears in Alarm Log	Alarm Level	Initial System Technician Command to Run (a)	Full Name of MO
SNC-REF	MAJOR	test board UUCSS s	SNC Reference

a. UU is the universal cabinet number (1 for PPN, 2 -44 for EPNs). C is the carrier designation (A, B, C, D, or E). SS is the number of the slot in which the circuit pack resides (10 or 12).

The SNC-REF maintenance object reports errors in SNI reference signals detected by the active Switch Node Clock. Descriptions of SNC-REF errors are described on the following pages. For a complete description of SNCs and SNIs, including circuit pack replacement instructions, see maintenance objects SNI-BD and SNC-BD.

SNC-REF Error Log Entries and Test to Clear Value

SNC Reference Error Log Entries

Error Type	Aux Data	SNI Slot†	Associated Test	Alarm Level	On/Off Board	Test to Clear Value
0*	0		Any	Any	Any	test board UUCSS r 1
1(a)	Any	2	Failure Audit (#777)	MAJOR	OFF	test board UUCSS r 1
257(a)	Any	3	Failure Audit (#777)	MAJOR	OFF	test board UUCSS r 1
513(a)	Any	4	Failure Audit (#777)	MAJOR	OFF	test board UUCSS r 1
769(a)	Any	5	Failure Audit (#777)	MAJOR	OFF	test board UUCSS r 1
1025(a)	Any	6	Failure Audit (#777)	MAJOR	OFF	test board UUCSS r 1
1281(a)	Any	7	Failure Audit (#777)	MAJOR	OFF	test board UUCSS r 1
1537(a)	Any	8	Failure Audit (#777)	MAJOR	OFF	test board UUCSS r 1
1793(a)	Any	9	Failure Audit (#777)	MAJOR	OFF	test board UUCSS r 1
2049(a)	Any	13	Failure Audit (#777)	MAJOR	OFF	test board UUCSS r 1
2305(a)	Any	14	Failure Audit (#777)	MAJOR	OFF	test board UUCSS r 1
2561(a)	Any	15	Failure Audit (#777)	MAJOR	OFF	test board UUCSS r 1
2817(a)	Any	16	Failure Audit (#777)	MAJOR	OFF	test board UUCSS r 1
3073(a)	Any	17	Failure Audit (#777)	MAJOR	OFF	test board UUCSS r 1
3329(a)	Any	18	Failure Audit (#777)	MAJOR	OFF	test board UUCSS r 1
3585(a)	Any	19	Failure Audit (#777)	MAJOR	OFF	test board UUCSS r 1
3841(a)	Any	20	Failure Audit (#777)	MAJOR	OFF	test board UUCSS r 1

* Run the Short Test Sequence first. If all tests pass, run the Long Test Sequence. Refer to the appropriate test description and follow the recommended procedures.

† The slot location of the SNI with which the SNC cannot communicate.

Notes:

a. This error occurs whenever the active or standby SNC detects problems in its timing reference with an SNI circuit pack in the same carrier. The slot location of the SNI with which the SNC cannot communicate is given in the error table above.

If duplicated SNCs exist in the carrier:

1. If the SNCs are duplicated in the carrier, check the error log via **display errors**. If both SNCs have this error, replace the SNI that the SNCs are complaining about.
2. If the error occurred only on the standby SNC and the active SNC in the carrier does not have this error, reset the standby SNC via the **reset board** command. (The active and standby SNCs are displayed via **status switch-node**.) If this error comes back after the standby has been reset, replace the standby SNC.
3. Retry the command. If this error is still in the error log, continue with the following steps.
4. If the active SNC has this error, use the **set switch-node-clock** command to set the standby SNC to active. If the new active SNC had this error, replace the SNI that the SNC is complaining about. Otherwise, replace the SNC that originally had this error.
5. Retry the command. If this error is still in the error log, escalate the problem.

If only one SNC exists in the carrier:

1. Replace the SNI that the SNC is complaining about.
2. Retry the command. If this error is still in the error log, continue with the following step.
3. Replace the SNC.
4. Retry the command. If this error is still in the error log, escalate the problem.

System Technician-Demanded Tests: Descriptions and Error Codes

Always investigate tests in the order presented in the table below when inspecting errors in the system. By clearing error codes associated with the *configuration audit* for example, you may also clear errors generated from other tests in the testing sequence.

Order of Investigation	Short Test Sequence	Long Test Sequence	Reset Board Sequence	D/ND*
Configuration Audit (#759)	X	X		ND
Failure Audit(#777)	X	X		ND
Processor Route Audit(#760)		X		ND
SNC On-Board Test(#778)	X	X		ND
TPN test(#779)	X	X		ND
Switch Node Clock Reset Test (#780)			X	D

Refer to maintenance object SNC-BD for descriptions of tests and results.

SNI-BD (SNI Circuit Pack)

MO Name As It Appears in Alarm Log	Alarm Level	Initial System Technician Command to Run (a)	Full Name of MO
SNI-BD	MAJOR	test board UUCSS s	SNI Circuit Pack
SNI-BD	MINOR	test board UUCSS s	SNI Circuit Pack
SNI-BD	WARNING	test board UUCSS s	SNI Circuit Pack

a. UU is the universal cabinet number (1 for PPN, 2 -44 for EPNs). C is the carrier designation (A, B, C, D, or E). SS is the number of the slot in which the circuit pack resides (01 to 21).

The TN573 Switch Node Interface (SNI)circuit pack is part of the Center Stage Switch (CSS)configuration. It resides in a switch note carrier that alone or with other switch nodes make up a CSS. SNIs connect to other SNIs or Expansion Interface (EI) circuit packs via fiber links. SNI to EI fiber links are used to connect port networks to a switch node carrier and SNI to SNI fiber links are used as inter-switch node fibers. In critical reliability systems, the fiber link connections are duplicated as part of Port Network Connectivity (PNC) duplication. In standard reliability and high reliability systems, the PNC is not duplicated.

There may be up to 16 SNIs in a switch node carrier. They are located in slots 2 through 9 and slots 13 through 20. Slot 11 in a switch node carrier is not used. One or two TN572 boards (SNCs) must reside in switch node carrier positions 10 and 12. The SNIs connect to other SNIs in the same carrier via the backplane; these connections within the same carrier are referred to as peer-links. Each SNI also connects via an optical fiber or metallic connection to another SNI in another carrier or to an EI in the Processor Port Network (PPN) or in an Expansion Port Network (EPN). These connections are referred to as fiber-links.

The Switch Node Clock (SNC) provides timing for the SNIs in the entire carrier. When two SNCs reside in the same switch node carrier, one is in active mode and one is in standby mode. The yellow LED on the active SNC will be on solid. The yellow LED on the standby SNC will be off. See the SYNC section for an explanation of how SNIs are involved in timing synchronization.

Figure 9-96 below shows an unduplicated CSS with one switch node. A single switch node can accommodate up to 16 port networks, including the PPN. A system with two switch nodes can accommodate up to 22 port networks. Figure 9-97 shows a two-switch node CSS with duplicated PNC (four switch node carriers). In this configuration, each PNC (A and B) contains two switch nodes. The cabinet numbers for the switch node carriers are typical cabinet numbers. The EPNs and PPN on the top half of the figure (PNC A) are the same as the EPNs and PPN on the bottom half of the figure (PNC B).

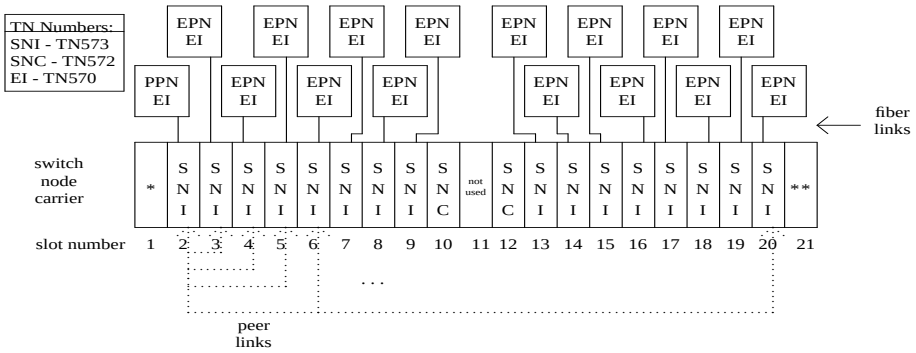

* = An EI or a DS1C circuit pack may reside in this slot

** = A DS1C circuit pack may reside in this slot

Figure 9-96. CSS Configuration with Simplex PNC and 1 Switch Node Carrier

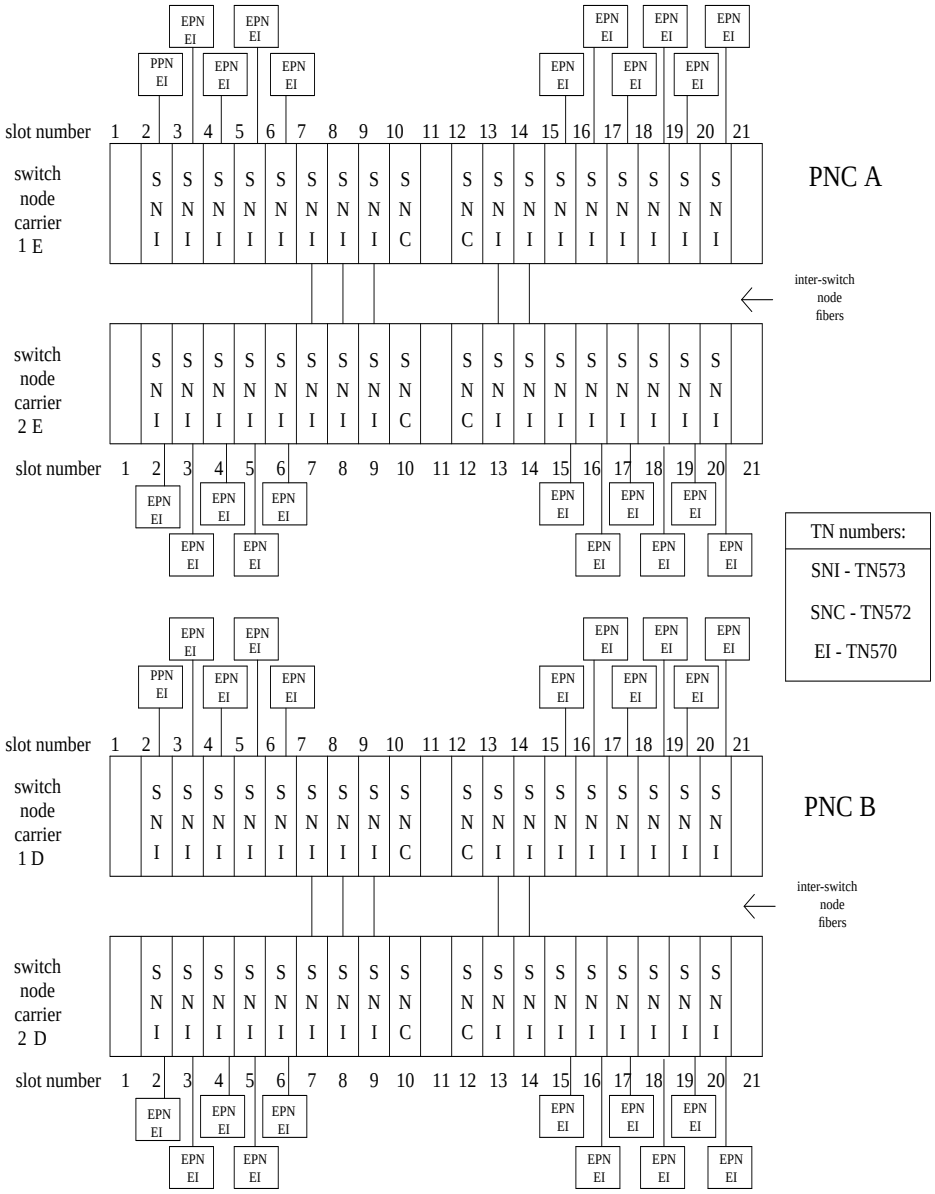

Figure 9-97. CSS Configuration with Duplicated PNC and 4 Switch Node Carriers

Remote EPNs

A DS1 converter complex can used to provide connectivity to a remotely located port network. The DS1 converter complex consists of two TN574 DS1 converter (DS1C) circuit packs connected by 1 to 4 DS1 facilities. The DS1C complex is administered as a fiber link.

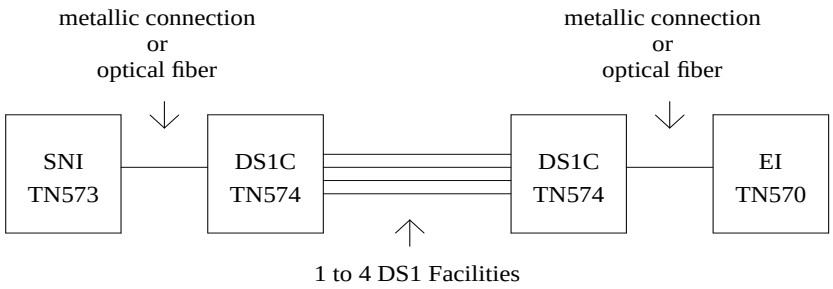

Figure 9-98. Fiber Link over a DS1 Converter Complex

SNI LEDs

The SNI circuit pack has red, green and yellow LEDs. The red and green LEDs have the usual meaning, with red signifying an on-board alarm, and green signifying maintenance testing in progress. The red and green LEDs will come on and then turn off when the circuit pack is reset.

NOTE:
If the red LED is on without any alarms active against the circuit pack, replace the SNI circuit pack. This indicates that SNI firmware has detected a fault and is unable to notify software.

The yellow LED indicates status information as follows:

SNI Yellow LED states

Condition	LED on	LED off
Fiber out of Frame	0.1 sec	0.1 sec
In frame, No Neighbor *	0.5 sec	0.5 sec
SNI active	solid on	never off
SNI standby	never on	solid off

* The fiber is in frame but a communication problem exists to the neighbor.

SNI Administration and SNI Board Insertion

The circuit packs in the switch node carrier will not function properly unless administration is performed first. For example, without fiber link administration, phone calls cannot be made through the CSS, CSS circuit packs will not be inserted, and maintenance software cannot test the CSS circuit packs.

For simplex PNC configurations, administration must be done in the following order before SNIs will be inserted:

1. Cabinet Administration: The switch node carriers must be administered into the proper cabinets. When this form is submitted by pressing ENTER, these carriers will be assigned switch node numbers. The **list cabinet** command can then be used to determine the numbers for the carriers of interest.
2. Circuit Pack Administration: All of the boards in the switch node carriers must be administered.
3. Fiber-link Administration: The fibers between the TN570s and the TN573 (or TN573 to TN573) must be administered via the **add fiber-link** command. A DS1C converter complex is added to a fiber link via the **add fiber-link** command also.

For duplicated PNC configurations, administration must be done in the following order before SNIs will be inserted:

1. Activate PNC duplication administration via the **change system-parameters customer-options** command.
2. Cabinet Administration: The switch node carriers and duplicate switch node carriers must be administered into the proper cabinets. When this form is submitted by depressing the "enter" key, these carriers will be assigned switch node numbers. The **list cabinet** command can then be used to determine the numbers for the carriers of interest.
3. Circuit Pack Administration: All of the boards in the switch node carriers must be administered.
4. Fiber-link Administration: The fibers between the TN570s and the TN573 (or TN573 to TN573) must be administered via the **add fiber-link** command. If the system is being changed from a simplex PNC configuration to a duplicate PNC configuration, the **change fiber-link command** can be used to administer the b-pnc fiber link endpoints on the existing fiber links. A DS1C converter complex is added to a fiber link via the **add fiber-link** command also.
5. PNC duplication is enabled via the **change system-parameters duplication** command.

Clear Firmware-Counters Command

SNI firmware generates error reports autonomously. This takes place independently of technician-demanded tests. Therefore, the **test board UUCSS** clear command will not affect the error status reported by firmware. The clear firmware-counters command will clear all firmware-generated errors unconditionally.

The **clear firmware-counters UUCSS** command sends a downlink message to the SNI circuit packs, causing them to clear out their firmware error counters and failure databases. Once the firmware failure database is cleared, the failure audit test (#777) will pass. If problems still exist, the firmware will increment its error counters and the failure audit test will begin failing again.

This command should not be used as a replacement for the repair procedures associated with the hardware error log entries. This command may be useful if a problem has been fixed and off-board alarms associated with the problem are still active.

Replacing an SNI Circuit Pack—Simplex PNC

WARNING:
Do not power down a Switch Node carrier to replace a circuit pack.

WARNING:
Replacing a Switch Node Interface, Switch Node Clock, Expansion Interface or DS1 Converter circuit pack on a simplex system disrupts service. The service effect can range from outage of a single EPN to outage of the entire system.

1.	Enter **busyout board UUCSS**	UUCSS represents the cabinet-carrier-slot address of the circuit pack to be replaced.
2.	Replace the circuit pack	
3.	Wait for the circuit pack to reset	Red and green LEDs will light and then go out.
4.	Enter **release board UUCSS**	**CAUTION:** *Do not busyout any Expansion Interface circuit pack after this point.*
5.	Enter **test alarms long clear** for category **exp-intf**.	
6.	Wait 5 minutes for SNI-BD, FIBER-LK AND DS1C-BD alarms to clear, or enter **clear firmware counters a-pnc**.	

Replacing an SNI Circuit Pack— Duplicated PNC

WARNING:
On a system with duplicated PNC, synchronization may be provided over a combination of active and standby components. This condition is indicated by an OFF-BOARD WARNING alarm against TDM-CLK with error type 2305. Repairs to standby PNC in this state may disrupt service. Otherwise, if the active PNC is functional, replacement of a standby component will not disrupt service.

1.	Enter **status pnc**	Verify that the component to be replaced is on the standby PNC.
2.	Enter **busyout pnc**	
3.	Enter **busyout board UUCSS**	UUCSS represents the cabinet-carrier-slot address of the circuit pack to be replaced.
4.	Replace the circuit pack	
5.	Enter **release board UUCSS**	**CAUTION:** *Do not busyout any Expansion Interface circuit pack after this point.*
6.	Enter **test alarms long clear** for category **exp-intf**.	
7.	Wait 5 minutes for SNI-BD, SNI-PEER, FIBER-LK, and DS1C alarms to clear, or enter **clear firmware counterssp 0 <a-pnc or b-pnc>**.	Use the letter designation of the pnc which holds the replaced component (the standby pnc).
8.	Enter **status pnc**.	If either PNC state-of-health is not "functional", consult the PNC-DUP section of the Maintenance Manual.
9.	Enter **release pnc**.	

Switch Node Interface Manual Loop Back Procedure

This procedure is destructive.

This procedure is to be used when an SNI circuit pack cannot be tested by software. This can occur when communication between the switch node carrier and the SPE is down. Before using this procedure, the configuration audit test (#759) should be run on SNI circuit packs where possible via **test board UUCSS s**. Also, the processor route audit test (#760) should be run via the **test board UUCSS long** command for the active SNC in the switch node carrier. If the active SNC is not inserted, test 760 can be run via **test hardware-group pnc P**, where P is **a-pnc** or **b-pnc**.

Before using this procedure, first determine whether more than one SNI is unable to communicate with software. Verify SNI and SNC circuit pack insertion via the **list configuration carrier UUC** command, where UUC is the cabinet and carrier location of a switch node carrier. Check for SNI and SNC insertion for every administered switch node carrier.

If all of the SNIs and SNCs are not inserted ("NO BOARD" is displayed for each board) in the entire PNC (either the a-pnc or the b-pnc), then the link between the PPN EI (on the PNC where SNI and SNC circuit packs did not insert) and the connected SNI is not functioning properly. If this case applies, perform the following steps:

1. Run the **test board UUCSS** command on the PPN EI and fix any problems found.
2. Perform the manual loopback procedure for the PPN EI.
3. Perform the manual loopback procedure for the SNI connected to the PPN EI.
4. Replace the active SNC.
5. If the problem persists, follow normal escalation procedures.

If the system has a two level switch node carrier configuration, i.e. SNI-SNI fiber links exist, and the SNIs and SNCs in the second switch node carrier only (the switch node carrier that has no SNI connected to the PPN EI) are not inserted and at least two SNI-SNI fiber links exist, perform the following steps:

1. Run the **test board UUCSS long** command on the SNIs in the first switch node carrier that are connected to SNIs in the second switch node carrier and fix any problems found.
2. Replace the active SNC.
3. Perform the manual loopback procedure for the SNIs in the second switch node carrier that are connected to SNIs in the first switch node carrier.
4. If the problem persists, follow normal escalation procedures.

If software is unable to communicate with an EPN EI but can communicate with the connected SNI:

1. Run the **test board UUCSS long** command on the connected SNI and fix any problems found.
2. Perform the manual loopback procedure for the EPN EI.
3. If the problem persists, follow normal escalation procedures.

   When the connection to the SNI circuit pack is via fiber, a short length of optical fiber is required for this procedure. If a metallic cable is used in the connection, the metallic connector must be removed from the back of the carrier, and a lightwave transceiver connected in its place. The short length of optical fiber can then be used.

   If this procedure is run on both endpoints on a fiber link (Expansion Interface circuit packs or Switch Node Interface circuit packs), and both check out fine, then the failure is most likely in the connection (fiber or metallic) itself if neither endpoint circuit pack is busied out, but the link remains inactive.

   1. Busyout the circuit pack (Expansion Interface or SNI) using the **busyout board UUCSS** command.
   2. Disconnect the transmit and receive fiber pair from the lightwave transceiver on the back of the circuit pack (Expansion Interface or Switch Node Interface) slot.

      NOTE:
      Note which is the transmit fiber and which is the receive fiber for proper re-connection at the end of this procedure. The fiber connected to the transmit side of the lightwave transceiver on one circuit pack should be connected to the receive side of the lightwave transceiver on the circuit pack on the opposite end of the fiber.

   3. Using a spare fiber jumper cable, interconnect the transmit and receive jacks of the lightwave transceiver as shown in Figure 9-99 on page S-102.

      NOTE:
      Make sure that the total length of the fiber jumper cable does not exceed the maximum length recommended for the fiber link connections between cabinets. This is necessary so that the testing of the Expansion Interface or SNI circuit pack is done within connectivity guidelines so that test results are not influenced due to the cable length not meeting requirements.

   4. Go to the front of the cabinet and inspect the yellow LED.
      - If the yellow LED flashes on at a rate of once per second, the (Expansion Interface or Switch Node Interface) circuit pack or transceiver should be replaced.

- If the yellow LED flashes on at a rate of five times per second, the circuit pack (Expansion Interface or Switch Node Interface) or the lightwave transceiver may need replacement. This condition may also be due to a faulty system clock on the network containing the Expansion Interface circuit pack or in the switch node carrier containing the SNI.
- If the yellow LED was blinking before starting this procedure and the yellow LED is not blinking now, this circuit pack (Expansion Interface or Switch Node Interface) and the lightwave transceiver are functioning properly.

5. Replace faulty component(s) and reconnect the original fiber. Be sure to reconnect the fibers properly as noted in Step 2.
6. Release Expansion Interface circuit pack or Switch Node Interface circuit pack with the **release board UUCSS** command.

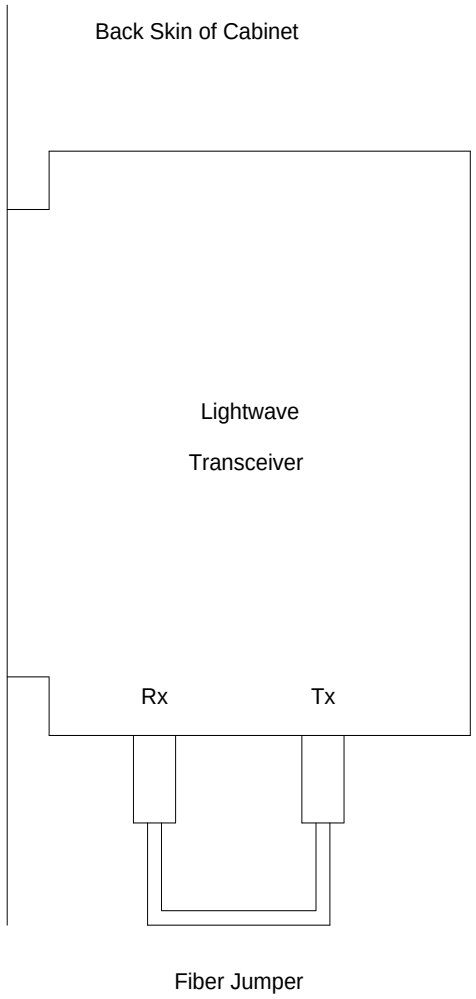

Figure 9-99. Interconnection of Lightwave Transceiver Transmit/Receive Jacks

SNI-BD Hardware Error Log Entries and Test to Clear Values

SNI Board Error Log Entries					
Error Type	**Aux Data**	**Associated Test**	**Alarm Level**	**On/Off Board**	**Test to Clear Value**
0*	0	Any	Any	Any	test board UUCSS r 1
1(b)	any	failure audit (#777) (a)	MAJ/MIN/WAR	ON	test board UUCSS r 1
18(c)	0	busyout board UUCSS	WARNING	OFF	release board UUCSS
257(d)	any	failure audit (#777) (a)	MAJ/MIN/WAR	OFF	test board UUCSS r 1
513(e)	any	failure audit (#777) (a)	MAJ/MIN/WAR	OFF	test board UUCSS r 1
769(f)	any	failure audit (#777) (a)	MAJ/MIN/WAR	OFF	test board UUCSS r 1
1025(g)	any	failure audit (#777) (a)	MAJ/MIN/WAR	ON/OFF	test board UUCSS r 1
1281(h)	any	failure audit (#777) (a)	MAJ/MIN/WAR	ON	test board UUCSS r 1
1537(i)	any	failure audit (#777) (a)	MAJ/MIN/WAR	OFF	test board UUCSS r 1
2561(j)	any	failure audit (#777) (a)	MAJ/MIN/WAR	ON	test board UUCSS r 1
2817(k)	any	failure audit (#777) (a)	MAJ/MIN/WAR	ON	test board UUCSS r 1

* Run the Short Test Sequence first. If all tests pass, run the Long Test Sequence. Refer to the appropriate test description and follow the recommended procedures.

Notes:

a. The first time you see an SNI-BD error in the error log, run the **test board UUCSS** command. If the failure audit test (#777) fails, enter **display errors** for this SNI circuit pack and continue with the associated repair procedures for SNI-BD errors.

b. This error indicates a problem that the SNI may have trouble communicating with all of the other SNI and SNC circuit packs in the switch node carrier.

   1. Replace the SNI circuit pack.
   2. If this error is still in the error log, follow normal escalation procedures.

c. This error indicates that the SNI circuit pack has been busied out via the **busyout board UUCSS** command. To resolve this error, release the SNI circuit pack via the **release board UUCSS** command.

d. This error indicates that the SNI cannot communicate with the active SNC.

1. Check the error log via **display errors** for other SNI circuit packs with the 257 SNI-BD error. If other SNI circuit packs in the same switch node carrier have error 257, then replace the active SNC.
2. Replace this SNI.
3. Replace the active SNC in the same switch node carrier.
4. Enter **display errors** and if this error is still in the error log, follow normal escalation procedures.

e. This error indicates that the SNI cannot communicate with the DS1C.

1. Perform the *Fiber Fault Isolation Procedure* described in Chapter 5, 'Responding to Alarms and Errors".
2. If this error is still in the error log, follow normal escalation procedures.

f. This error indicates a failure communicating synchronization control data with the active SNC.

Look at all of the SNI-BD errors in the log via **display errors** and **display alarms** to determine whether to follow procedure 1 or procedure 2. See the table below which lists pairs of SNIs that are considered to be adjacent. Use Procedure 2 if either of the following two conditions is present:

— At least one pair of adjacent SNIs in this carrier has Error 769 with an off-board alarm logged against both SNIs in the pair.

— The active SNC in this carrier has error 257.

If neither of the above is true, follow Procedure 1.

Adjacent SNI Slot Numbers
2 & 3
4 & 5
6 & 7
8 & 9
13 & 14
15 & 16
17 & 18
19 & 20

Procedure 1 (suspect TPN link or clock generation out of lock problem)

1. Enter **display alarms** and **display errors** and follow the procedures for any on-board SNI-BD error and alarm entries.

2. If more than one SNI circuit pack in the same switch node carrier has SNI-BD error 769 with an off board alarm, replace the active SNC in the same carrier.
3. Replace this SNI.
4. Replace the active SNC in the same carrier.
5. If none of the above steps cleared this error, follow normal escalation procedures.

Procedure 2 (suspect clock generation out of lock problem):

1. If only one SNC exists in this switch node carrier, replace the SNC. If two SNCs exist in this switch node carrier, perform the following steps:
   a. Set the standby SNC to active by running the **set switch-node-clock UUCSS** command with the standby SNC's location.
   b. If the problem goes away, replace the SNC that was previously active. Then set the SNC that was just replaced to active via the **set switch-node-clock UUCSS** command. If the problem returns, assume that the SNC that was just replaced was not at fault and go to step 2 below.
   c. If the problem persists, switch back to the previously active SNC via the **set switch-node-clock** command and go to step 2 below.
2. Replace the leftmost SNI from the pair of adjacent SNIs.
3. Replace the rightmost SNI from the pair of adjacent SNIs.
4. If none of the above steps cleared this error, follow normal escalation procedures. (If none of the above steps cleared this error, this could be a switch node carrier backplane problem.)
   a. This error indicates a failure communicating synchronization control data over the fiber-link.

      If the error is logged as an on-board error:

      1. Replace the SNI circuit pack.
      2. If this error is still in the error log, follow normal escalation procedures.

      If the error is logged as an off-board error:

      1. Enter **display errors** and follow the associated repair procedures for FIBER-LK errors.
      2. Replace the SNI with this error.
      3. Replace the other endpoint of the fiber-link if no DS1C complex is administered on the fiber-link (use **list fiber-link** to determine whether a DS1C complex is administered). If a DS1C complex is administered on the fiber-link, replace the circuit packs in this order:

4. Replace the DS1C circuit pack connected to this SNI.
5. Replace the other DS1C circuit pack.
6. Replace the other endpoint of the fiber-link.
7. If this error is still in the error log, follow normal escalation procedures.

b. This error indicates a processor complex failure.

1. Replace the SNI circuit pack.
2. If this error is still in the error log, follow normal escalation procedures.

c. This error indicates that excessive slips have occurred.

Follow the steps for diagnosing synchronization problems when slips have occurred in the SYNC section.

d. This error indicates that the SNI cannot communicate with its neighbor. The SNI is at fault.

1. Replace the SNI circuit pack.
2. If this error is still in the error log, follow normal escalation procedures.

e. This error indicates that the SNI cannot communicate with one of its peers. The SNI is at fault.

1. Replace the SNI circuit pack.
2. If this error is still in the error log, follow normal escalation procedures.

System Technician-Demanded Tests: Descriptions and Error Codes

Always investigate tests in the order presented in the table below when inspecting errors in the system. By clearing error codes associated with the *Configuration Audit* for example, you may also clear errors generated from other tests in the testing sequence.

Order of Investigation	Short Test Sequence	Long Test Sequence	Reset Board Sequence	D/ND*
Configuration Audit (#759)	X	X		ND
Failure Audit(#777)	X	X		ND
Fiber Out of Frame Query(#989)	X	X		ND
Packet Neighbor Test(#767)	X	X		ND
Circuit Path Test(#755)	X	X		ND
Destructive Facility Test(#757)		X		D
Off-board Destructive Facility Test(#756)		X		D
Switch Node Interface Reset Test(#761)			X	D

* D = Destructive; ND = Nondestructive

NOTE:
Test #982 is not an actual demand maintenance test. This test number is used to report results of executing of the **clear firmware-counters** command. Refer to error codes for Test #777.

SNI Circuit Path Test (#755)

This test is non-destructive.

This test performs a non-destructive test of the circuit path.

Table 9-325. TEST #755 SNI Circuit Path Test

Error Code	Test Result	Description/ Recommendation
2100	ABORT	Could not allocate the necessary system resources to run this test. 1. Retry the command at 1 minute intervals a maximum of 3 times. 2. If the test continues to abort, follow normal escalation procedures.
2300	ABORT	The downlink message necessary to run this test could not be sent. 1. Retry the command at 1 minute intervals a maximum of 3 times. 2. If the test still aborts, follow normal escalation procedures.
2301	ABORT	The software timer could not be set before sending the downlink message necessary to run this test. 1. Retry the command at 1 minute intervals a maximum of 3 times. 2. If the test continues to abort, follow normal escalation procedures.
2302	ABORT	Software received an unexpected message data from the SNI circuit pack. 1. Retry the command at 1 minute intervals a maximum of 3 times. 2. If the test continues to abort, follow normal escalation procedures.

Continued on next page

Table 9-325. TEST #755 SNI Circuit Path Test — *Continued*

Error Code	Test Result	Description/ Recommendation
2303	ABORT	The SNI circuit pack claims that the test requested by software is invalid. 1. Retry the command at 1 minute intervals a maximum of 3 times. 2. If the test continues to abort, follow normal escalation procedures.
2304	ABORT	SNI firmware is not able to run the test. 1. Retry the command at 1 minute intervals a maximum of 3 times. 2. If the test continues to abort, follow normal escalation procedures.

Continued on next page

Table 9-325. TEST #755 SNI Circuit Path Test — *Continued*

Error Code	Test Result	Description/ Recommendation
2306	ABORT	The SNI circuit pack is not responding to test requests sent by software. 1. Run the **test led switch-node** for the switch node that the SNI resides in to verify whether the LEDs on the board light. 2. If the LEDs on the other boards in the carrier light, but the LEDs on this board do not light, run test 760 via **test board UUCSS l** for the active SNC in this carrier. Wait 5 minutes and then try step 1 one more time. If the LEDs on this board still do not light, replace this board. Replacing an SNI may be service interrupting. Refer to the SNI-BD section for the procedure for replacing an SNI. 3. If none of the LEDs light for the boards in the same carrier as this board, fix any problems associated with the connectivity of this carrier to the SPE. Check **list fiber-link** to determine the fiber connections to this carrier. Check the LEDs on all SNIs and EIs and fix any fiber problems. Enter **display errors** and follow the associated repair procedures for any EXP-INTF error entries associated with the PPN. Also, follow the associated repair procedures for any SYNC, SNI-BD, SNC-BD, FIBER-LK, or SNI-PEER error entries. 4. Follow the procedure described above, SNI Manual Loopback to determine whether the circuit pack or the fiber connection is faulty. 5. If the test continues to abort, follow normal escalation procedures.

Continued on next page

Table 9-325. TEST #755 SNI Circuit Path Test — *Continued*

Error Code	Test Result	Description/ Recommendation
102	FAIL	The SNI circuit pack cannot communicate with the SNI in slot 2 over the circuit path. 1. Fix any on-board SNI-BD errors against this SNI and the SNI in slot 2. Use **display errors** to find any SNI-BD errors and check **display alarms** to see whether the errors have on-board alarms. Then follow the associated repair procedures for SNI-BD. 2. Check the error log via **display errors** for other SNI circuit packs with SNI-PEER error type 1. If other SNI circuit packs have SNI-PEER error type 1, then replace the SNI in slot 2. 3. Replace this SNI. 4. Replace the SNI in slot 2. 5. If none of the above steps cleared this error, follow normal escalation procedures.
103	FAIL	The SNI circuit pack cannot communicate with the SNI in slot 3 over the circuit path. 1. Fix any on-board SNI-BD errors against this SNI and the SNI in slot 3. Use **display errors** to find any SNI-BD errors and check **display alarms** to see whether the errors have on-board alarms. Then follow the associated repair procedures for SNI-BD. 2. Check the error log via **display errors** for other SNI circuit packs with SNI-PEER error type 257. If other SNI circuit packs have SNI-PEER error type 257, then replace the SNI in slot 3. 3. Replace this SNI. 4. Replace the SNI in slot 3. 5. If none of the above steps cleared this error, follow normal escalation procedures.

Continued on next page

Table 9-325. TEST #755 SNI Circuit Path Test — *Continued*

Error Code	Test Result	Description/ Recommendation
104	FAIL	The SNI circuit pack cannot communicate with the SNI in slot 4 over the circuit path. 1. Fix any on-board SNI-BD errors against this SNI and the SNI in slot 4. Use **display errors** to find any SNI-BD errors and check **display alarms** to see whether the errors have on-board alarms. Then follow the associated repair procedures for SNI-BD. 2. Check the error log via **display errors** for other SNI circuit packs with SNI-PEER error type 513. If other SNI circuit packs have SNI-PEER error type 513, then replace the SNI in slot 4. 3. Replace this SNI. 4. Replace the SNI in slot 4. 5. If none of the above steps cleared this error, follow normal escalation procedures.
105	FAIL	The SNI circuit pack cannot communicate with the SNI in slot 5 over the circuit path. 1. Fix any on-board SNI-BD errors against this SNI and the SNI in slot 5. Use **display errors** to find any SNI-BD errors and check **display alarms** to see whether the errors have on-board alarms. Then follow the associated repair procedures for SNI-BD. 2. Check the error log via **display errors** for other SNI circuit packs with SNI-PEER error type 769. If other SNI circuit packs have SNI-PEER error type 769, then replace the SNI in slot 5. 3. Replace this SNI. 4. Replace the SNI in slot 5. 5. If none of the above steps cleared this error, follow normal escalation procedures.

Continued on next page

Table 9-325. TEST #755 SNI Circuit Path Test — *Continued*

Error Code	Test Result	Description/ Recommendation
106	FAIL	The SNI circuit pack cannot communicate with the SNI in slot 6 over the circuit path. 1. Fix any on-board SNI-BD errors against this SNI and the SNI in slot 6. Use **display errors** to find any SNI-BD errors and check **display alarms** to see whether the errors have on-board alarms. Then follow the associated repair procedures for SNI-BD. 2. Check the error log via **display errors** for other SNI circuit packs with SNI-PEER error type 1025. If other SNI circuit packs have SNI-PEER error type 1025, then replace the SNI in slot 6. 3. Replace this SNI. 4. Replace the SNI in slot 6. 5. If none of the above steps cleared this error, follow normal escalation procedures.
107	FAIL	The SNI circuit pack cannot communicate with the SNI in slot 7 over the circuit path. 1. Fix any on-board SNI-BD errors against this SNI and the SNI in slot 7. Use **display errors** to find any SNI-BD errors and check **display alarms** to see whether the errors have on-board alarms. Then follow the associated repair procedures for SNI-BD. 1. Check the error log via **display errors** for other SNI circuit packs with SNI-PEER error type 1281. If other SNI circuit packs have SNI-PEER error type 1281, then replace the SNI in slot 7. 2. Replace this SNI. 3. Replace the SNI in slot 7. 4. If none of the above steps cleared this error, follow normal escalation procedures.

Continued on next page

Table 9-325. TEST #755 SNI Circuit Path Test — *Continued*

Error Code	Test Result	Description/ Recommendation
108	FAIL	The SNI circuit pack cannot communicate with the SNI in slot 8 over the circuit path. 1. Fix any on-board SNI-BD errors against this SNI and the SNI in slot 8. Use **display errors** to find any SNI-BD errors and check **display alarms** to see whether the errors have on-board alarms. Then follow the associated repair procedures for SNI-BD. 2. Check the error log via **display errors** for other SNI circuit packs with SNI-PEER error type 1537. If other SNI circuit packs have SNI-PEER error type 1537, then replace the SNI in slot 8. 3. Replace this SNI. 4. Replace the SNI in slot 8. 5. If none of the above steps cleared this error, follow normal escalation procedures.
109	FAIL	The SNI circuit pack cannot communicate with the SNI in slot 9 over the circuit path. 1. Fix any on-board SNI-BD errors against this SNI and the SNI in slot 9. Use **display errors** to find any SNI-BD errors and check **display alarms** to see whether the errors have on-board alarms. Then follow the associated repair procedures for SNI-BD. 2. Check the error log via **display errors** for other SNI circuit packs with SNI-PEER error type 1793. If other SNI circuit packs have SNI-PEER error type 1793, then replace the SNI in slot 9. 3. Replace this SNI. 4. Replace the SNI in slot 9. 5. If none of the above steps cleared this error, follow normal escalation procedures.

Continued on next page

Table 9-325. TEST #755 SNI Circuit Path Test — *Continued*

Error Code	Test Result	Description/ Recommendation
113	FAIL	The SNI circuit pack cannot communicate with the SNI in slot 13 over the circuit path. 1. Fix any on-board SNI-BD errors against this SNI and the SNI in slot 13. Use **display errors** to find any SNI-BD errors and check **display alarms** to see whether the errors have on-board alarms. Then follow the associated repair procedures for SNI-BD. 2. Check the error log via **display errors** for other SNI circuit packs with SNI-PEER error type 2049. If other SNI circuit packs have SNI-PEER error type 2049, then replace the SNI in slot 13. 3. Replace this SNI. 4. Replace the SNI in slot 13. 5. If none of the above steps cleared this error, follow normal escalation procedures.
114	FAIL	The SNI circuit pack cannot communicate with the SNI in slot 14 over the circuit path. 1. Fix any on-board SNI-BD errors against this SNI and the SNI in slot 14. Use **display errors** to find any SNI-BD errors and check **display alarms** to see whether the errors have on-board alarms. Then follow the associated repair procedures for SNI-BD. 2. Check the error log via **display errors** for other SNI circuit packs with SNI-PEER error type 2305. If other SNI circuit packs have SNI-PEER error type 2305, then replace the SNI in slot 14. 3. Replace this SNI. 4. Replace the SNI in slot 14. 5. If none of the above steps cleared this error, follow normal escalation procedures.

Continued on next page

Table 9-325. TEST #755 SNI Circuit Path Test — *Continued*

Error Code	Test Result	Description/ Recommendation
115	FAIL	The SNI circuit pack cannot communicate with the SNI in slot 15 over the circuit path. 1. Fix any on-board SNI-BD errors against this SNI and the SNI in slot 15. Use **display errors** to find any SNI-BD errors and check **display alarms** to see whether the errors have on-board alarms. Then follow the associated repair procedures for SNI-BD. 2. Check the error log via **display errors** for other SNI circuit packs with SNI-PEER error type 2561. If other SNI circuit packs have SNI-PEER error type 2561, then replace the SNI in slot 15. 3. Replace this SNI. 4. Replace the SNI in slot 15. 5. If none of the above steps cleared this error, follow normal escalation procedures.
116	FAIL	The SNI circuit pack cannot communicate with the SNI in slot 16 over the circuit path. 1. Fix any on-board SNI-BD errors against this SNI and the SNI in slot 16. Use **display errors** to find any SNI-BD errors and check **display alarms** to see whether the errors have on-board alarms. Then follow the associated repair procedures for SNI-BD. 2. Check the error log via **display errors** for other SNI circuit packs with SNI-PEER error type 2817. If other SNI circuit packs have SNI-PEER error type 2817, then replace the SNI in slot 16. 3. Replace this SNI. 4. Replace the SNI in slot 16. 5. If none of the above steps cleared this error, follow normal escalation procedures.

Continued on next page

Table 9-325. TEST #755 SNI Circuit Path Test — *Continued*

Error Code	Test Result	Description/ Recommendation
117	FAIL	The SNI circuit pack cannot communicate with the SNI in slot 17 over the circuit path. 1. Fix any on-board SNI-BD errors against this SNI and the SNI in slot 17. Use **display errors** to find any SNI-BD errors and check **display alarms** to see whether the errors have on-board alarms. Then follow the associated repair procedures for SNI-BD. 2. Check the error log via **display errors** for other SNI circuit packs with SNI-PEER error type 3073. If other SNI circuit packs have SNI-PEER error type 3073, then replace the SNI in slot 17. 3. Replace this SNI. 4. Replace the SNI in slot 17. 5. If none of the above steps cleared this error, follow normal escalation procedures.
118	FAIL	The SNI circuit pack cannot communicate with the SNI in slot 18 over the circuit path. 1. Fix any on-board SNI-BD errors against this SNI and the SNI in slot 18. Use **display errors** to find any SNI-BD errors and check **display alarms** to see whether the errors have on-board alarms. Then follow the associated repair procedures for SNI-BD. 2. Check the error log via **display errors** for other SNI circuit packs with SNI-PEER error type 3329. If other SNI circuit packs have SNI-PEER error type 3329, then replace the SNI in slot 18. 3. Replace this SNI. 4. Replace the SNI in slot 18. 5. If none of the above steps cleared this error, follow normal escalation procedures.

Continued on next page

Table 9-325. TEST #755 SNI Circuit Path Test — *Continued*

Error Code	Test Result	Description/ Recommendation
119	FAIL	The SNI circuit pack cannot communicate with the SNI in slot 19 over the circuit path. 1. Fix any on-board SNI-BD errors against this SNI and the SNI in slot 19. Use **display errors** to find any SNI-BD errors and check **display alarms** to see whether the errors have on-board alarms. Then follow the associated repair procedures for SNI-BD. 2. Check the error log via **display errors** for other SNI circuit packs with SNI-PEER error type 3585. If other SNI circuit packs have SNI-PEER error type 3585, then replace the SNI in slot 19. 3. Replace this SNI. 4. Replace the SNI in slot 19. 5. If none of the above steps cleared this error, follow normal escalation procedures.
120	FAIL	The SNI circuit pack cannot communicate with the SNI in slot 20 over the circuit path. 1. Fix any on-board SNI-BD errors against this SNI and the SNI in slot 20. Use **display errors** to find any SNI-BD errors and check **display alarms** to see whether the errors have on-board alarms. Then follow the associated repair procedures for SNI-BD. 2. Check the error log via **display errors** for other SNI circuit packs with SNI-PEER error type 3841. If other SNI circuit packs have SNI-PEER error type 3841, then replace the SNI in slot 20. 3. Replace this SNI. 4. Replace the SNI in slot 20. 5. If none of the above steps cleared this error, follow normal escalation procedures.

Continued on next page

Table 9-325. TEST #755 SNI Circuit Path Test — *Continued*

Error Code	Test Result	Description/ Recommendation
122	FAIL	The SNI circuit pack cannot communicate with its neighbor via the circuit path. 1. Fix any on-board errors (SNI-BD, EXP-INTF, and/or DS1C-BD) against the components of this fiber link by using **display errors** and **display alarms** and following the associated repair procedures. (Use the **list fiber-link** command to find the fiber link associated with this SNI. The **display fiber-link** command can then be used to find the endpoints of the fiber link and the DS1C circuit pack locations if this fiber link has a DS1 Converter Complex administered.) 2. Enter **display errors** and follow the associated repair procedures for any FIBER-LK entries for the fiber this SNI is administered on. Check **list fiber-link** to determine the administered fiber. 3. If this fiber link has a DS1 converter complex administered, enter **display errors** and **display alarms** and follow the associated repair procedures for any off-board DS1C-BD or DS1-FAC entries for either of the DS1C boards administered or for the DS1 facilities associated with either of the DS1C boards administered. 4. Replace this SNI. 5. If this test still fails, follow normal escalation procedures.
	PASS	The SNI passed the sni circuit path test.

SNI Off-board Destructive Facility Test (#756)

This test is destructive.

The SNI runs a destructive looparound of the off-board and on-board looparounds. This test returns the result of the off-board looparound, while test 757 returns the result of the on-board looparound.

Table 9-326. TEST #756 SNI Off-Board Destructive Facility Test

Error Code	Test Result	Description/ Recommendation
1015	ABORT	The system will not allow this test to be run because the SNI circuit pack has not been busied out. Busy out the SNI circuit pack with **busyout board**. Repeat the **test board UUCSS long** command.
2100	ABORT	Could not allocate the necessary system resources to run this test. 1. Retry the command at 1 minute intervals a maximum of 3 times. 2. If the test continues to abort, follow normal escalation procedures.
2300	ABORT	The downlink message necessary to run this test could not be sent. 1. Retry the command at 1 minute intervals a maximum of 3 times. 2. If the test continues to abort, follow normal escalation procedures.
2301	ABORT	The software timer could not be set before sending the downlink message necessary to run this test. 1. Retry the command at 1 minute intervals a maximum of 3 times. 2. If the test continues to abort, follow normal escalation procedures.
2304	ABORT	SNI firmware is not able to run the test. 1. Retry the command at 1 minute intervals a maximum of 3 times. 2. If the test continues to abort, follow normal escalation procedures.

Continued on next page

Table 9-326. TEST #756 SNI Off-Board Destructive Facility Test — *Continued*

Error Code	Test Result	Description/ Recommendation
2306	ABORT	The SNI circuit pack is not responding to test requests sent by software. 1. Run the **test led switch-node** for the switch node that the SNI resides in to verify whether the LEDs on the board light. 2. If the LEDs on the other boards in the carrier light, but the LEDs on this board do not light, run test 760 via **test board UUCSS l** for the active SNC in this carrier. Wait 5 minutes and then try step 1 one more time. If the LEDs on this board still do not light, replace this board. Replacing an SNI may be service interrupting. Refer to the SNI-BD section for the procedure for replacing an SNI. 3. If none of the LEDs light for the boards in the same carrier as this board, fix any problems associated with the connectivity of this carrier to the SPE. Check **list fiber-link** to determine the fiber connections to this carrier. Check the LEDs on all SNIs and EIs and fix any fiber problems. Enter **display errors** and follow the associated repair procedures for any EXP-INTF error entries associated with the PPN. Also, follow the associated repair procedures for any SYNC, SNI-BD, SNC-BD, FIBER-LK, or SNI-PEER error entries. 4. Follow the procedure described above, SNI Manual Loopback to determine whether the circuit pack or the fiber connection is faulty. 5. If the test continues to abort, follow normal escalation procedures.

Continued on next page

Table 9-326. TEST #756 SNI Off-Board Destructive Facility Test — *Continued*

Error Code	Test Result	Description/ Recommendation
1415	ABORT	The lightwave transceiver is not present. 1. If a lightwave transceiver is not supposed to be present, do nothing. For example, an SNI connected to a DS1C circuit pack or an SNI with a metallic connection does not have a lightwave transceiver. This test can only be run when a lightwave transceiver exists. 2. Otherwise, continue with the following steps. 3. Check the lightwave transceiver connections. 4. Replace the lightwave transceiver. 5. Replace the SNI circuit pack. 6. If the test continues to abort, follow normal escalation procedures.
127	FAIL	The data is not correctly looped around. 1. Check the lightwave transceiver or metallic connection. 2. Replace the lightwave transceiver or metallic connection. 3. Replace the SNI circuit pack. 4. If the test continues to fail, follow normal escalation procedures.
	PASS	No problems associated with this test are detected on the SNI.

SNI Destructive Facility Test (#757)

This test is destructive.

The SNI runs a destructive looparound of the off-board and on-board loopar ounds. This test returns the result of the on-board looparound, while test 756 returns the result of the off-board looparound.

Table 9-327. TEST #757 SNI Destructive Facility Test

Error Code	Test Result	Description/ Recommendation
1015	ABORT	The system will not allow this test to be run because the SNI circuit pack has not been busied out. Busy out the SNI circuit pack with **busyout board**. Repeat the **test board UUCSS long** command.
2100	ABORT	Could not allocate the necessary system resources to run this test. 1. Retry the command at 1 minute intervals a maximum of 3 times. 2. If the test continues to abort, follow normal escalation procedures.
2300	ABORT	The downlink message necessary to run this test could not be sent. 1. Retry the command at 1 minute intervals a maximum of 3 times. 2. If the test continues to abort, follow normal escalation procedures.
2301	ABORT	The software timer could not be set before sending the downlink message necessary to run this test. 1. Retry the command at 1 minute intervals a maximum of 3 times. 2. If the test continues to abort, follow normal escalation procedures.
2304	ABORT	SNI firmware is not able to run the test. 1. Retry the command at 1 minute intervals a maximum of 3 times. 2. If the test continues to abort, follow normal escalation procedures.

Continued on next page

Table 9-327. TEST #757 SNI Destructive Facility Test — *Continued*

Error Code	Test Result	Description/ Recommendation
2306	ABORT	The SNI circuit pack is not responding to test requests sent by software. 1. Run the **test led switch-node** for the switch node that the SNI resides in to verify whether the LEDs on the board light. 2. If the LEDs on the other boards in the carrier light, but the LEDs on this board do not light, run test 760 via **test board UUCSS l** for the active SNC in this carrier. Wait 5 minutes and then try step 1 one more time. If the LEDs on this board still do not light, replace this board. Replacing an SNI may be service interrupting. Refer to the SNI-BD section for the procedure for replacing an SNI. 3. If none of the LEDs light for the boards in the same carrier as this board, fix any problems associated with the connectivity of this carrier to the SPE. Check **list fiber-link** to determine the fiber connections to this carrier. Check the LEDs on all SNIs and EIs and fix any fiber problems. Enter **display errors** and follow the associated repair procedures for any EXP-INTF error entries associated with the PPN. Also, follow the associated repair procedures for any SYNC, SNI-BD, SNC-BD, FIBER-LK, or SNI-PEER error entries. 4. Follow the procedure described above, SNI Manual Loopback to determine whether the circuit pack or the fiber connection is faulty. 5. If the test continues to abort, follow normal escalation procedures.
127	FAIL	The data is not correctly looped around. 1. Replace the SNI circuit pack. 2. If the test continues to fail, follow normal escalation procedures.
	PASS	No problems associated with this test are detected on the SNI.

Configuration Audit (#759)

This test is non-destructive.

NOTE:
For descriptions of result codes for this test refer to:

- SNC-BD when the circuit pack tested is a Switch Node Clock (circuit pack slots 10 or 12).
- SNI-BD when the circuit pack tested is a Switch Node Interface (circuit pack slots 2-9 or 13-20).

This test is run via the **test board short** or **test board long** command for SNI circuit packs or SNC circuit packs.

For SNI circuit packs, this test queries the SNI for SNCs in the same switch node carrier, SNI peers, DS1Cs, and EI or SNI neighbors that the SNI can communicate with and compares this data to the administered data.

For SNC circuit packs, this test queries the SNC for SNCs and SNIs in the same switch node carrier that the SNC can communicate with and compares this data to the administered data.

Failures of this test cause entries in the error and alarm logs against Switch Node Configuration (SN-CONF) with the board location of the SNI or SNC.

Incorrectly Connected Administered Fibers

Some physically connected fibers that do not match fiber administration can cause port network problems that are not detected and alarmed by PNC tests. The symptoms will usually be many phone calls not working correctly, and port network component alarms because of translation mismatches.

This test is unable to detect the case where an SNI is connected to the same type of board (EI or SNI) as administered but located in a different cabinet but the same carrier and same slot as the administered fiber endpoint. The administered fiber endpoint can be viewed with the **list fiber-link** command. This test can only detect if the fiber endpoint connected to the SNI is in a different carrier, slot location than the administered fiber endpoint.

Incorrectly Connected Administered SNI-EI Fibers

If the SNI is connected to the same type of fiber endpoint as the administered fiber endpoint, but the location is the same as administered except for the cabinet, many phone calls will not work correctly; some phone calls will not go through and some phone calls will ring the wrong phone.

The **test led** command can be used in this case to check connectivity.

1. Run the **test led port-network** command on each administered port network and verify that the LEDs on the correct port network are lit.
2. If they are not lit, check that the fiber connections to the port network are consistent with the administered fibers (**list fiber-link**) that does not light the LEDs as expected.
3. Run **test led switch-node** on each administered switch node carrier and verify that the LEDs on the correct carrier are lit.
4. If they are not, check the connectivity to the switch node carrier that does not light the LEDs as expected.

Incorrectly Connected Administered SNI-SNI Fibers between 3 Switch Nodes

If the system has more than 2 switch nodes, SNI-SNI fibers administered between 2 switch nodes could be incorrectly connected to a third switch node. This is a problem that could occur during installation or when inter-switch node fibers are changed. For multiple fibers to a distant switch node (not the PPN switch node), an incorrect connection would not appear as a problem unless this fiber is used for a system-link to a port network connected to the distant switch node. The **status system-link** command can be used to determine the boards and fiber-links in the path from the PPN to a specific port network. A specific SNI-SNI fiber connection must be in the system-link path to be checked with the port network LED test.

One method to force an SNI-SNI fiber connection to be used as a system-link is to physically remove all SNI-SNI connections except the fiber-link being tested at the distant switch node by physical removing SNI boards in the distant SWItch node.

1. Use the **status system-link** command to verify that this fiber selected for test is in the path to the EPN connected to the distant switch node that will be used for the LED test.
2. Run the **test led** sequence to a port network as described above to verify this fiber connection.
3. Repeat this procedure for each of the other SNI-SNI fibers terminating on this distant switch node.

Another method for testing multiple fiber connections to a distant switch node is described below.

1. Use the **list fiber-link** command to determine the number of SNI-SNI fibers that are administered and terminating on this switch node.
2. Run the **test led port-network** command on a port network connected to this distant switch node and verify that the LEDs on the correct port network are lit.

3. Use the **status system-link** command and select the active EI in the port network connected to the distant switch node being tested. This display will show the path from the PPN and the SNI-SNI fiber being used in this path.
4. If they are not lit, check that the fiber connections to the port network are consistent with the administered fibers (**list fiber-link**) that does not light the LEDs as expected.
5. If the port network LEDs are lit and we have multiple SNI-SNI fibers to this distant switch node, physically remove the SNI that is listed in this path.
6. Use the **status system-link** command to determine the new path from the PPN to the this distant switch.
7. Run the **test led port-network** command on a port network connected to the distant switch node and verify that the LEDs on the correct port network are lit.
8. Continue with steps 5 — 7 above until the last SNI-SNI fiber to this distant switch node has been tested.

Table 9-328. TEST #759 Configuration Audit

Error Code	Test Result	Description/ Recommendation
2100	ABORT	Could not allocate the necessary system resources to run this test. 1. Retry the command at 1 minute intervals a maximum of 3 times. 2. If the test continues to abort, follow normal escalation procedures.
2300	ABORT	The downlink message necessary to run this test could not be sent. 1. Retry the command at 1 minute intervals a maximum of 3 times. 2. If the test continues to abort, follow normal escalation procedures.
2301	ABORT	The software timer could not be set before sending the downlink message necessary to run this test. 1. Retry the command at 1 minute intervals a maximum of 3 times. 2. If the test continues to abort, follow normal escalation procedures.

Continued on next page

Table 9-328. TEST #759 Configuration Audit — *Continued*

Error Code	Test Result	Description/ Recommendation
2306	ABORT	The SNI circuit pack is not responding to test requests sent by software. 1. Run the **test led switch-node** for the switch node that this board resides in to verify whether the LEDs on the board light. 2. If the LEDs on the other boards in the carrier light, but the LEDs on this board do not light, run test 760 via **test board UUCSS** for the active SNC in this carrier. Wait 5 minutes and then try step 1 one more time. If the LEDs on this board still do not light, replace this board. Replacing an SNI may be service interrupting. Refer to the SNI-BD section for the procedure for replacing an SNI. 3. If none of the LEDs light for the boards in the same carrier as this board, fix any problems associated with the connectivity of this carrier to the SPE. Check **list fiber-link** to determine the fiber connections to this carrier. Check the LEDs on all SNIs and EIs and fix any fiber problems. Enter **display errors** and follow the associated repair procedures for any EXP-INTF error entries associated with the PPN. Also, follow the associated repair procedures for any SYNC, SNI-BD, SNC-BD, FIBER-LK, or SNI-PEER error entries. 4. Follow the procedure described above, SNI Manual Loopback to determine whether the circuit pack or the fiber connection is faulty. 5. If the test continues to abort, follow normal escalation procedures.
2500	ABORT	Internal System Error 1. Retry the command at 1 minute intervals a maximum of 3 times. 2. If the test continues to abort, follow normal escalation procedures.

Continued on next page

Table 9-328. TEST #759 Configuration Audit — *Continued*

Error Code	Test Result	Description/ Recommendation
102	FAIL	The SNI circuit pack cannot communicate with the equipped SNI in slot 2. 1. Perform the *Fiber Fault Isolation Procedure* described in Chapter 5, 'Responding to Alarms and Errors". 2. If the SNI being tested has SNI-PEER error type 1, replace the SNI being tested. Replacing an SNI may be service interrupting. Refer to the SNI-BD section for the procedure for replacing an SNI. To view SNI-PEER errors, use the **display errors** command with category PNC-PEER. Retry the command. 3. If the SNI being tested has SNI-PEER error type 1, replace the SNI in slot 2. Replacing an SNI may be service interrupting. Refer to the SNI-BD section for the procedure for replacing an SNI. Retry the command. 4. If the test continues to fail, follow normal escalation procedures.
103	FAIL	The SNI circuit pack cannot communicate with the equipped SNI in slot 3. 1. Perform the *Fiber Fault Isolation Procedure* described in Chapter 5, 'Responding to Alarms and Errors". 2. If the SNI being tested has SNI-PEER error type 257, replace the SNI being tested. Replacing an SNI may be service interrupting. Refer to the SNI-BD section for the procedure for replacing an SNI. To view SNI-PEER errors, use the **display errors** command with category PNC-PEER. Retry the command. 3. If the SNI being tested has SNI-PEER error type 257, replace the SNI in slot 3. Replacing an SNI may be service interrupting. Refer to the SNI-BD section for the procedure for replacing an SNI. Retry the command. 4. If the test continues to fail, follow normal escalation procedures.

Continued on next page

Table 9-328. TEST #759 Configuration Audit — *Continued*

Error Code	Test Result	Description/ Recommendation
104	FAIL	The SNI circuit pack cannot communicate with the equipped SNI in slot 4. 1. Perform the *Fiber Fault Isolation Procedure* described in Chapter 5, "Responding to Alarms and Errors". 2. If the SNI being tested has SNI-PEER error type 513, replace the SNI being tested. Replacing an SNI may be service interrupting. Refer to the SNI-BD section for the procedure for replacing an SNI. To view SNI-PEER errors, use the **display errors** command with category PNC-PEER. Retry the command. 3. If the SNI being tested has SNI-PEER error type 513, replace the SNI in slot 4. Replacing an SNI may be service interrupting. Refer to the SNI-BD section for the procedure for replacing an SNI. Retry the command. 4. If the test continues to fail, follow normal escalation procedures.
105	FAIL	The SNI circuit pack cannot communicate with the equipped SNI in slot 5. 1. Perform the *Fiber Fault Isolation Procedure* described in Chapter 5, "Responding to Alarms and Errors". 2. If the SNI being tested has SNI-PEER error type 769, replace the SNI being tested. Replacing an SNI may be service interrupting. Refer to the SNI-BD section for the procedure for replacing an SNI. To view SNI-PEER errors, use the **display errors** command with category PNC-PEER. Retry the command. 3. If the SNI being tested has SNI-PEER error type 769, replace the SNI in slot 5. Replacing an SNI may be service interrupting. Refer to the SNI-BD section for the procedure for replacing an SNI. Retry the command. 4. If the test continues to fail, follow normal escalation procedures.

Continued on next page

Table 9-328. TEST #759 Configuration Audit — *Continued*

Error Code	Test Result	Description/ Recommendation
106	FAIL	The SNI circuit pack cannot communicate with the equipped SNI in slot 6. 1. Perform the *Fiber Fault Isolation Procedure* described in Chapter 5, 'Responding to Alarms and Errors". 2. If the SNI being tested has SNI-PEER error type 1025, replace the SNI being tested. Replacing an SNI may be service interrupting. Refer to the SNI-BD section for the procedure for replacing an SNI. To view SNI-PEER errors, use the **display errors** command with category PNC-PEER. Retry the command. 3. If the SNI being tested has SNI-PEER error type 1025, replace the SNI in slot 6. Replacing an SNI may be service interrupting. Refer to the SNI-BD section for the procedure for replacing an SNI. Retry the command. 4. If the test continues to fail, follow normal escalation procedures.

Continued on next page

Table 9-328. TEST #759 Configuration Audit — *Continued*

Error Code	Test Result	Description/ Recommendation
107	FAIL	The SNI circuit pack cannot communicate with the equipped SNI in slot 7. 1. Perform the *Fiber Fault Isolation Procedure* described in Chapter 5, "Responding to Alarms and Errors". 2. If the SNI being tested has SNI-PEER error type 1281, replace the SNI being tested. Replacing an SNI may be service interrupting. Refer to the SNI-BD section for the procedure for replacing an SNI. To view SNI-PEER errors, use the **display errors** command with category PNC-PEER. Retry the command. 3. If the SNI being tested has SNI-PEER error type 1281, replace the SNI in slot 7. Replacing an SNI may be service interrupting. Refer to the SNI-BD section for the procedure for replacing an SNI. Retry the command. 4. If the test continues to fail, follow normal escalation procedures.

Continued on next page

Table 9-328. TEST #759 Configuration Audit — *Continued*

Error Code	Test Result	Description/ Recommendation
108	FAIL	The SNI circuit pack cannot communicate with the equipped SNI in slot 8. 1. Perform the *Fiber Fault Isolation Procedure* described in Chapter 5, 'Responding to Alarms and Errors". 2. If the SNI being tested has SNI-PEER error type 1537, replace the SNI being tested. Replacing an SNI may be service interrupting. Refer to the SNI-BD section for the procedure for replacing an SNI. To view SNI-PEER errors, use the **display errors** command with category PNC-PEER. Retry the command. 3. If the SNI being tested has SNI-PEER error type 1537, replace the SNI in slot 8. Replacing an SNI may be service interrupting. Refer to the SNI-BD section for the procedure for replacing an SNI. Retry the command. 4. If the test continues to fail, follow normal escalation procedures.

Continued on next page

Table 9-328. TEST #759 Configuration Audit — *Continued*

Error Code	Test Result	Description/ Recommendation
109	FAIL	The SNI circuit pack cannot communicate with the equipped SNI in slot 9. 1. Perform the *Fiber Fault Isolation Procedure* described in Chapter 5, "Responding to Alarms and Errors". 2. If the SNI being tested has SNI-PEER error type 1793, replace the SNI being tested. Replacing an SNI may be service interrupting. Refer to the SNI-BD section for the procedure for replacing an SNI. To view SNI-PEER errors, use the **display errors** command with category PNC-PEER. Retry the command. 3. If the SNI being tested has SNI-PEER error type 1793, replace the SNI in slot 9. Replacing an SNI may be service interrupting. Refer to the SNI-BD section for the procedure for replacing an SNI. Retry the command. 4. If the test continues to fail, follow normal escalation procedures.

Continued on next page

Table 9-328. TEST #759 Configuration Audit — *Continued*

Error Code	Test Result	Description/ Recommendation
112	FAIL	The SNI circuit pack cannot communicate with the active SNC. 1. Check the error log for other SNI circuit packs in the same carrier with a 257 SNI-BD error. Use **display errors** with category PNC to view SNI-BD errors. If other SNI circuit packs in the same switch node carrier have error 257, then replace the active SNC in this switch node carrier. Replacing an SNC may be service interrupting. Refer to the SNC-BD section for the procedure for replacing an SNC. 2. Replace this SNI. Replacing an SNI may be service interrupting. Refer to the SNI-BD section for the procedure for replacing an SNI. 3. Replace the active SNC in the same switch node carrier. Replacing an SNC may be service interrupting. Refer to the SNC-BD section for the procedure for replacing an SNC. 4. If this test still fails, follow normal escalation procedures.

Continued on next page

Table 9-328. TEST #759 Configuration Audit — *Continued*

Error Code	Test Result	Description/ Recommendation
113	FAIL	The SNI circuit pack cannot communicate with the equipped SNI in slot 13. 1. Perform the *Fiber Fault Isolation Procedure* described in Chapter 5, "Responding to Alarms and Errors". 2. If the SNI being tested has SNI-PEER error type 2049, replace the SNI being tested. Replacing an SNI may be service interrupting. Refer to the SNI-BD section for the procedure for replacing an SNI. To view SNI-PEER errors, use the **display errors** command with category PNC-PEER. Retry the command. 3. If the SNI being tested has SNI-PEER error type 2049, replace the SNI in slot 13. Replacing an SNI may be service interrupting. Refer to the SNI-BD section for the procedure for replacing an SNI. Retry the command. 4. If the test continues to fail, follow normal escalation procedures.

Continued on next page

Table 9-328. TEST #759 Configuration Audit — *Continued*

Error Code	Test Result	Description/ Recommendation
114	FAIL	The SNI circuit pack cannot communicate with the equipped SNI in slot 14. 1. Perform the *Fiber Fault Isolation Procedure* described in Chapter 5, 'Responding to Alarms and Errors". 2. If the SNI being tested has SNI-PEER error type 2305, replace the SNI being tested. Replacing an SNI may be service interrupting. Refer to the SNI-BD section for the procedure for replacing an SNI. To view SNI-PEER errors, use the **display errors** command with category PNC-PEER. Retry the command. 3. If the SNI being tested has SNI-PEER error type 2305, replace the SNI in slot 14. Replacing an SNI may be service interrupting. Refer to the SNI-BD section for the procedure for replacing an SNI. Retry the command. 4. If the test continues to fail, follow normal escalation procedures.

Continued on next page

Table 9-328. TEST #759 Configuration Audit — *Continued*

Error Code	Test Result	Description/ Recommendation
115	FAIL	The SNI circuit pack cannot communicate with the equipped SNI in slot 15. 1. Perform the *Fiber Fault Isolation Procedure* described in Chapter 5, "Responding to Alarms and Errors". 2. If the SNI being tested has SNI-PEER error type 2561, replace the SNI being tested. Replacing an SNI may be service interrupting. Refer to the SNI-BD section for the procedure for replacing an SNI. To view SNI-PEER errors, use the **display errors** command with category PNC-PEER. Retry the command. 3. If the SNI being tested has SNI-PEER error type 2561, replace the SNI in slot 15. Replacing an SNI may be service interrupting. Refer to the SNI-BD section for the procedure for replacing an SNI. Retry the command. 4. If the test continues to fail, follow normal escalation procedures.

Continued on next page

Table 9-328. TEST #759 Configuration Audit — *Continued*

Error Code	Test Result	Description/ Recommendation
116	FAIL	The SNI circuit pack cannot communicate with the equipped SNI in slot 16. 1. Perform the *Fiber Fault Isolation Procedure* described in Chapter 5, 'Responding to Alarms and Errors". 2. If the SNI being tested has SNI-PEER error type 2817, replace the SNI being tested. Replacing an SNI may be service interrupting. Refer to the SNI-BD section for the procedure for replacing an SNI. To view SNI-PEER errors, use the **display errors** command with category PNC-PEER. Retry the command. 3. If the SNI being tested has SNI-PEER error type 2817, replace the SNI in slot 16. Replacing an SNI may be service interrupting. Refer to the SNI-BD section for the procedure for replacing an SNI. Retry the command. 4. If the test continues to fail, follow normal escalation procedures.

Continued on next page

Table 9-328. TEST #759 Configuration Audit — *Continued*

Error Code	Test Result	Description/ Recommendation
117	FAIL	The SNI circuit pack cannot communicate with the equipped SNI in slot 17. 1. Perform the *Fiber Fault Isolation Procedure* described in Chapter 5, "Responding to Alarms and Errors". 2. If the SNI being tested has SNI-PEER error type 3073, replace the SNI being tested. Replacing an SNI may be service interrupting. Refer to the SNI-BD section for the procedure for replacing an SNI. To view SNI-PEER errors, use the **display errors** command with category PNC-PEER. Retry the command. 3. If the SNI being tested has SNI-PEER error type 3073, replace the SNI in slot 17. Replacing an SNI may be service interrupting. Refer to the SNI-BD section for the procedure for replacing an SNI. Retry the command. 4. If the test continues to fail, follow normal escalation procedures.

Continued on next page

Table 9-328. TEST #759 Configuration Audit — *Continued*

Error Code	Test Result	Description/ Recommendation
118	FAIL	The SNI circuit pack cannot communicate with the equipped SNI in slot 18. 1. Perform the "Fiber Fault Isolation Procedure" described in Chapter 5, 'Responding to Alarms and Errors". 2. If the SNI being tested has SNI-PEER error type 3329, replace the SNI being tested. Replacing an SNI may be service interrupting. Refer to the SNI-BD section for the procedure for replacing an SNI. To view SNI-PEER errors, use the **display errors** command with category PNC-PEER. Retry the command. 3. If the SNI being tested has SNI-PEER error type 3329, replace the SNI in slot 18. Replacing an SNI may be service interrupting. Refer to the SNI-BD section for the procedure for replacing an SNI. Retry the command. 4. If the test continues to fail, follow normal escalation procedures.

Continued on next page

Table 9-328. TEST #759 Configuration Audit — *Continued*

Error Code	Test Result	Description/ Recommendation
119	FAIL	The SNI circuit pack cannot communicate with the equipped SNI in slot 19. 1. Perform the "Fiber Fault Isolation Procedure" described in Chapter 5, "Responding to Alarms and Errors". 2. If the SNI being tested has SNI-PEER error type 3585, replace the SNI being tested. Replacing an SNI may be service interrupting. Refer to the SNI-BD section for the procedure for replacing an SNI. To view SNI-PEER errors, use the **display errors** command with category PNC-PEER. Retry the command. 3. If the SNI being tested has SNI-PEER error type 3585, replace the SNI in slot 19. Replacing an SNI may be service interrupting. Refer to the SNI-BD section for the procedure for replacing an SNI. Retry the command. 4. If the test continues to fail, follow normal escalation procedures.

Continued on next page

Table 9-328. TEST #759 Configuration Audit — *Continued*

Error Code	Test Result	Description/ Recommendation
120	FAIL	The SNI circuit pack cannot communicate with the equipped SNI in slot 20. 1. Perform the "Fiber Fault Isolation Procedure" described in Chapter 5, 'Responding to Alarms and Errors". 2. If the SNI being tested has SNI-PEER error type 3841, replace the SNI being tested. Replacing an SNI may be service interrupting. Refer to the SNI-BD section for the procedure for replacing an SNI. To view SNI-PEER errors, use the **display errors** command with category PNC-PEER. Retry the command. 3. If the SNI being tested has SNI-PEER error type 3841, replace the SNI in slot 20. Replacing an SNI may be service interrupting. Refer to the SNI-BD section for the procedure for replacing an SNI. Retry the command. 4. If the test continues to fail, follow normal escalation procedures.
133	FAIL	No neighbor link is administered, but the SNI has an EI neighbor. 1. Administer the SNI on a fiber link to the EI neighbor it is connected to via the **add fiber-link next** command. Or remove both fiber endpoints (i.e., this SNI and its EI neighbor) and remove the fiber endpoints from circuit pack administration via **change circuit-pack**. 2. If the test continues to fail, follow normal escalation procedures.

Continued on next page

Table 9-328. TEST #759 Configuration Audit — *Continued*

Error Code	Test Result	Description/ Recommendation
134	FAIL	No neighbor link is administered, but the SNI has an SNI neighbor. 1. Administer the SNI on a fiber link to the SNI neighbor it is connected to via the **add fiber-link next** command. Or remove both fiber endpoints (i.e., this SNI and its SNI neighbor) and remove the fiber endpoints from circuit pack administration via **change circuit-pack**. 2. If the test continues to fail, follow normal escalation procedures.
135	FAIL	The SNI circuit pack cannot communicate with its neighbor. The SNI has an administered neighbor, but cannot communicate with its neighbor. 1. Check if the administered neighbor is inserted. If not, insert the neighbor circuit pack. 2. Perform the "Fiber Fault Isolation Procedure" described in Chapter 5, "Responding to Alarms and Errors". 3. If this test still fails, follow normal escalation procedures.
136	FAIL	The SNI's administered neighbor does not match the physical neighbor connected. The type of neighbor administered is an SNI and the type of neighbor physically connected is an EI. Enter **list fiber-link** and verify that the fiber optic cable and metallic cable connections are installed as administered.
137	FAIL	The SNI's administered neighbor does not match the physical neighbor connected. The type of neighbor administered is an EI and the type of neighbor physically connected is an SNI. Enter **list fiber-link** and verify that the fiber optic cable and metallic cable connections are installed as administered.

Continued on next page

Table 9-328. TEST #759 Configuration Audit — *Continued*

Error Code	Test Result	Description/ Recommendation
138	FAIL	The physical neighbor location does not match administered neighbor location. The carrier and slot of the administered neighbor do not match the carrier and slot of the physical neighbor. Enter **list fiber-link** and verify that the fiber optic cable and metallic cable connections are installed as administered. If the problem does not seem to be caused by a physical connection problem or an administration problem, replace the neighbor circuit pack. It is possible for the neighbor circuit pack to have a hardware problem that causes it to report a wrong angel address (physical carrier/slot address) to software.
139	FAIL	The SNI is administered to be connected to a DS1C but is not physically connected to a DS1C. *If a DS1C is not supposed to be connected to this SNI*, change administration to remove the DS1 converter complex from the fiber link associated with this SNI by: 1. Check for the fiber that this SNI is an endpoint of by checking **list fiber-link**. 2. **Remove fiber-link** for the fiber that this SNI is an endpoint of. 3. Add the fiber back via **add fiber-link** and this time do not administer the DS1 converter complex.
140	FAIL	The SNI is physically connected to a DS1C but is not administered to be connected to a DS1C. Either add the DS1 converter complex to the fiber that this SNI is associated with by: 1. Check for the fiber that this SNI is an endpoint of by checking **list fiber-link**. 2. **Remove fiber-link** for the fiber that this SNI is an endpoint of. 3. Add the fiber back via **add fiber-link** and this time administer the DS1 converter complex also.
	PASS	The administered data and the circuit packs the SNI can communicate with match.

Switch Node Interface Reset Test (#761)

This test is destructive.

This test resets the SNI circuit pack via the **reset board UUCSS** command when an SNI circuit pack location is entered. The SNI is reset via the active SNC circuit pack in the carrier. If the SNI is connected to the PPN EI, the SNI is reset via its PPN EI neighbor. If an SNI with an EPN EI or another SNI as its neighbor cannot be reset via the active SNC, i.e., if no software communication exists between the active SNC and the SPE, an attempt will be made to reset the SNI via its neighbor.

An SNI should be reset instead of reseating the circuit pack. The **reset board** command should almost never be used on an SNI. It may be necessary to use the **reset board** command if the SNI circuit pack gets into a mode where it cannot communicate with software.

If an SNI with active errors and alarms is reset, the errors and alarms may take a while to come back, therefore the **reset board** command can mask real problems.

Table 9-329. TEST #761 Switch Node Interface Reset Test

Error Code	Test Result	Description/ Recommendation
2100	ABORT	Could not allocate the necessary system resources to run this test. 1. Retry the command at 1 minute intervals a maximum of 3 times. 2. If the test continues to abort, follow normal escalation procedures.
2300	ABORT	The downlink message necessary to run this test could not be sent. 1. Retry the command at 1 minute intervals a maximum of 3 times. 2. If the test still aborts, follow normal escalation procedures.

Continued on next page

Table 9-329. TEST #761 Switch Node Interface Reset Test — *Continued*

Error Code	Test Result	Description/ Recommendation
2301	ABORT	The software timer could not be set before sending the downlink message necessary to run this test. 1. Retry the command at 1 minute intervals a maximum of 3 times. 2. If the test continues to abort, follow normal escalation procedures.
2302	ABORT	Software received an unexpected message data from the SNI circuit pack. 1. Retry the command at 1 minute intervals a maximum of 3 times. 2. If the test continues to abort, follow normal escalation procedures.
2303	ABORT	The SNI circuit pack claims that the test requested by software is invalid. 1. Retry the command at 1 minute intervals a maximum of 3 times. 2. If the test continues to abort, follow normal escalation procedures.
2304	ABORT	SNI firmware is not able to run the test. 1. Retry the command at 1 minute intervals a maximum of 3 times. 2. If the test continues to abort, follow normal escalation procedures.

Continued on next page

Table 9-329. TEST #761 Switch Node Interface Reset Test — *Continued*

Error Code	Test Result	Description/ Recommendation
2306	ABORT	The SNI circuit pack is not responding to test requests sent by software. 1. Run the **test led switch-node** for the switch node that the SNI resides in to verify whether the LEDs on the board light. 2. If the LEDs on the other boards in the carrier light, but the LEDs on this board do not light, run test 760 via **test board UUCSS l** for the active SNC in this carrier. Wait 5 minutes and then try step 1 one more time. If the LEDs on this board still do not light, replace this board. Replacing an SNI may be service interrupting. Refer to the SNI-BD section for the procedure for replacing an SNI. 3. If none of the LEDs light for the boards in the same carrier as this board, fix any problems associated with the connectivity of this carrier to the SPE. Check **list fiber-link** to determine the fiber connections to this carrier. Check the LEDs on all SNIs and EIs and fix any fiber problems. Enter **display errors** and follow the associated repair procedures for any EXP-INTF error entries associated with the PPN. Also, follow the associated repair procedures for any SYNC, SNI-BD, SNC-BD, FIBER-LK, or SNI-PEER error entries. 4. Follow the procedure described above, SNI Manual Loopback to determine whether the circuit pack or the fiber connection is faulty. 5. If the test continues to abort, follow normal escalation procedures.
2316	ABORT	The reset of the SNI circuit pack was attempted via the connected DS1C circuit pack. This ABORT code indicates that the fiber is not administered, but in this particular case it also indicates a software problem. 1. Retry the command at 1 minute intervals a maximum of 1 time. 2. If the test continues to abort, follow normal escalation procedures.

Continued on next page

Table 9-329. TEST #761 Switch Node Interface Reset Test — *Continued*

Error Code	Test Result	Description/ Recommendation
2500	ABORT	Internal System Error 1. Retry the command at 1-minute intervals a maximum of 3 times. 2. If the test continues to abort, follow normal escalation procedures.
	PASS	The reset message was sent out successfully to the active SNC or to the SNI's neighbor. A PASS does not necessarily mean the SNI circuit pack was successfully reset. The reset can be verified by checking that the red and green LEDs turn on and then turn off. If an SNI circuit pack fails one of the firmware tests run during its reset sequence, the red LED will stay on and the circuit pack should be replaced.

Packet Neighbor Link Test (#767)

This test is non-destructive.

This test checks the packet path of the neighbor circuit pack and the peer circuit packs. A packet is sent from the SNI being tested to the peer SNIs and to the neighbor EI or SNI. If the other EI or SNI sends the same data back in the packet, this test passes. Otherwise, this test fails.

Table 9-330. TEST #767 Packet Neighbor Link Test

Error Code	Test Result	Description/ Recommendation
2100	ABORT	Could not allocate the necessary system resources to run this test. 1. Retry the command at 1 minute intervals a maximum of 3 times. 2. If the test continues to abort, follow normal escalation procedures.
2300	ABORT	The downlink message necessary to run this test could not be sent. 1. Retry the command at 1 minute intervals a maximum of 3 times. 2. If the test continues to abort, follow normal escalation procedures.
2301	ABORT	The software timer could not be set before sending the downlink message necessary to run this test. 1. Retry the command at 1 minute intervals a maximum of 3 times. 2. If the test continues to abort, follow normal escalation procedures.
2302	ABORT	Software received an unexpected message data from the SNI circuit pack. 1. Retry the command at 1 minute intervals a maximum of 3 times. 2. If the test continues to abort, follow normal escalation procedures.

Continued on next page

Table 9-330. TEST #767 Packet Neighbor Link Test — *Continued*

Error Code	Test Result	Description/ Recommendation
2303	ABORT	The SNI circuit pack claims that the test requested by software is invalid. 1. Retry the command at 1 minute intervals a maximum of 3 times. 2. If the test continues to abort, follow normal escalation procedures.
2304	ABORT	SNI firmware is not able to run the test. For this particular test, the SNI circuit pack must be able to communicate with its neighbor. 1. Verify that the SNI can communicate with its neighbor by checking the yellow LED of the SNI to make sure the SNI is in frame or by running the **test board** command for the SNI and checking test 989 for fiber out-of-frame. If the yellow LED or test 989 test results indicate that the fiber is out-of-frame, fix the connection or replace the lightwave transceivers on one or both circuit packs (if present) and retry the command. If a DS1 converter complex exists on the fiber link, enter **display errors** and follow the associated repair procedures for any DS1C-BD and DS1-FAC entries. 2. Retry the command at 1 minute intervals a maximum of 3 times. 3. If the test continues to abort, follow normal escalation procedures.

Continued on next page

Table 9-330. TEST #767 Packet Neighbor Link Test — *Continued*

Error Code	Test Result	Description/ Recommendation
2306	ABORT	The SNI circuit pack is not responding to test requests sent by software. 1. Run the **test led switch-node** for the switch node carrier that the SNI resides in to verify whether the LEDs on the board light. 2. If the LEDs on the other boards in the carrier light, but the LEDs on this board do not light, run test 760 via **test board UUCSS l** for the active SNC in this carrier. Wait 5 minutes and then try step 1 one more time. If the LEDs on this board still do not light, replace this board. Replacing an SNI may be service interrupting. Refer to the SNI-BD section for the procedure for replacing an SNI. 3. If none of the LEDs light for the boards in the same carrier as this board, fix any problems associated with the connectivity of this carrier to the SPE. Check **list fiber-link** to determine the fiber connections to this carrier. Check the LEDs on all SNIs and EIs and fix any fiber problems. Enter **display errors** and follow the associated repair procedures for any EXP-INTF error entries associated with the PPN. Also, follow the associated repair procedures for any SYNC, SNI-BD, SNC-BD, FIBER-LK, or SNI-PEER error entries. 4. Follow the procedure described above, SNI Manual Loopback to determine whether the circuit pack or the fiber connection is faulty. 5. If the test continues to abort, follow normal escalation procedures.

Continued on next page

Table 9-330. TEST #767 Packet Neighbor Link Test — *Continued*

Error Code	Test Result	Description/ Recommendation
102	FAIL	The SNI circuit pack cannot communicate with the SNI in slot 2 over the packet path. 1. Enter **display errors** and follow the associated repair procedures for any SNI-BD entries for the SNI being tested or the SNI in slot 2. 2. Enter **display errors** and follow the associated repair procedures for any SNI-PEER entries. 3. Replace the SNI being tested. 4. Replace the SNI in slot 2. 5. If the test continues to fail, follow normal escalation procedures.
103	FAIL	The SNI circuit pack cannot communicate with the SNI in slot 3 over the packet path. 1. Enter **display errors** and follow the associated repair procedures for any SNI-BD entries for the SNI being tested or the SNI in slot 3. 2. Enter **display errors** and follow the associated repair procedures for any SNI-PEER entries. 3. Replace the SNI being tested. 4. Replace the SNI in slot 3. 5. If the test continues to fail, follow normal escalation procedures.
104	FAIL	The SNI circuit pack cannot communicate with the SNI in slot 4 over the packet path. 1. Enter **display errors** and follow the associated repair procedures for any SNI-BD entries for the SNI being tested or the SNI in slot 4. 2. Enter **display errors** and follow the associated repair procedures for any SNI-PEER entries. 3. Replace the SNI being tested. 4. Replace the SNI in slot 4. 5. If the test continues to fail, follow normal escalation procedures.

Continued on next page

Table 9-330. TEST #767 Packet Neighbor Link Test — *Continued*

Error Code	Test Result	Description/ Recommendation
105	FAIL	The SNI circuit pack cannot communicate with the SNI in slot 5 over the packet path. 1. Enter **display errors** and follow the associated repair procedures for any SNI-BD entries for the SNI being tested or the SNI in slot 5. 2. Enter **display errors** and follow the associated repair procedures for any SNI-PEER entries. 3. Replace the SNI being tested. 4. Replace the SNI in slot 5. 5. If the test continues to fail, follow normal escalation procedures.
106	FAIL	The SNI circuit pack cannot communicate with the SNI in slot 6 over the packet path. 1. Enter **display errors** and follow the associated repair procedures for any SNI-BD entries for the SNI being tested or the SNI in slot 6. 2. Enter **display errors** and follow the associated repair procedures for any SNI-PEER entries. 3. Replace the SNI being tested. 4. Replace the SNI in slot 6. 5. If the test continues to fail, follow normal escalation procedures.
107	FAIL	The SNI circuit pack cannot communicate with the SNI in slot 7 over the packet path. 1. Enter **display errors** and follow the associated repair procedures for any SNI-BD entries for the SNI being tested or the SNI in slot 7. 2. Enter **display errors** and follow the associated repair procedures for any SNI-PEER entries. 3. Replace the SNI being tested. 4. Replace the SNI in slot 7. 5. If the test continues to fail, follow normal escalation procedures.

Continued on next page

Table 9-330. TEST #767 Packet Neighbor Link Test — *Continued*

Error Code	Test Result	Description/ Recommendation
108	FAIL	The SNI circuit pack cannot communicate with the SNI in slot 8 over the packet path. 1. Enter **display errors** and follow the associated repair procedures for any SNI-BD entries for the SNI being tested or the SNI in slot 8. 2. Enter **display errors** and follow the associated repair procedures for any SNI-PEER entries. 3. Replace the SNI being tested. 4. Replace the SNI in slot 8. 5. If the test continues to fail, follow normal escalation procedures.
109	FAIL	The SNI circuit pack cannot communicate with the SNI in slot 9 over the packet path. 1. Enter **display errors** and follow the associated repair procedures for any SNI-BD entries for the SNI being tested or the SNI in slot 9. 2. Enter **display errors** and follow the associated repair procedures for any SNI-PEER entries. 3. Replace the SNI being tested. 4. Replace the SNI in slot 9. 5. If the test continues to fail, follow normal escalation procedures.
113	FAIL	The SNI circuit pack cannot communicate with the SNI in slot 13 over the packet path. 1. Enter **display errors** and follow the associated repair procedures for any SNI-BD entries for the SNI being tested or the SNI in slot 13. 2. Enter **display errors** and follow the associated repair procedures for any SNI-PEER entries. 3. Replace the SNI being tested. 4. Replace the SNI in slot 13. 5. If the test continues to fail, follow normal escalation procedures.

Continued on next page

Table 9-330. TEST #767 Packet Neighbor Link Test — *Continued*

Error Code	Test Result	Description/ Recommendation
114	FAIL	The SNI circuit pack cannot communicate with the SNI in slot 14 over the packet path. 1. Enter **display errors** and follow the associated repair procedures for any SNI-BD entries for the SNI being tested or the SNI in slot 14. 2. Enter **display errors** and follow the associated repair procedures for any SNI-PEER entries. 3. Replace the SNI being tested. 4. Replace the SNI in slot 14. 5. If the test continues to fail, follow normal escalation procedures.
115	FAIL	The SNI circuit pack cannot communicate with the SNI in slot 15 over the packet path. 1. Enter **display errors** and follow the associated repair procedures for any SNI-BD entries for the SNI being tested or the SNI in slot 15. 2. Enter **display errors** and follow the associated repair procedures for any SNI-PEER entries. 3. Replace the SNI being tested. 4. Replace the SNI in slot 15. 5. If the test continues to fail, follow normal escalation procedures.
116	FAIL	The SNI circuit pack cannot communicate with the SNI in slot 16 over the packet path. 1. Enter **display errors** and follow the associated repair procedures for any SNI-BD entries for the SNI being tested or the SNI in slot 16. 2. Enter **display errors** and follow the associated repair procedures for any SNI-PEER entries. 3. Replace the SNI being tested. 4. Replace the SNI in slot 16. 5. If the test continues to fail, follow normal escalation procedures.

Continued on next page

Table 9-330. TEST #767 Packet Neighbor Link Test — *Continued*

Error Code	Test Result	Description/ Recommendation
117	FAIL	The SNI circuit pack cannot communicate with the SNI in slot 17 over the packet path. 1. Enter **display errors** and follow the associated repair procedures for any SNI-BD entries for the SNI being tested or the SNI in slot 17. 2. Enter **display errors** and follow the associated repair procedures for any SNI-PEER entries. 3. Replace the SNI being tested. 4. Replace the SNI in slot 17. 5. If the test continues to fail, follow normal escalation procedures.
118	FAIL	The SNI circuit pack cannot communicate with the SNI in slot 18 over the packet path. 1. Enter **display errors** and follow the associated repair procedures for any SNI-BD entries for the SNI being tested or the SNI in slot 18. 2. Enter **display errors** and follow the associated repair procedures for any SNI-PEER entries. 3. Replace the SNI being tested. 4. Replace the SNI in slot 18. 5. If the test continues to fail, follow normal escalation procedures.
119	FAIL	The SNI circuit pack cannot communicate with the SNI in slot 19 over the packet path. 1. Enter **display errors** and follow the associated repair procedures for any SNI-BD entries for the SNI being tested or the SNI in slot 19. 2. Enter **display errors** and follow the associated repair procedures for any SNI-PEER entries. 3. Replace the SNI being tested. 4. Replace the SNI in slot 19. 5. If the test continues to fail, follow normal escalation procedures.

Continued on next page

Table 9-330. TEST #767 Packet Neighbor Link Test — *Continued*

Error Code	Test Result	Description/ Recommendation
120	FAIL	The SNI circuit pack cannot communicate with the SNI in slot 20 over the packet path. 1. Enter **display errors** and follow the associated repair procedures for any SNI-BD entries for the SNI being tested or the SNI in slot 20. 2. Enter **display errors** and follow the associated repair procedures for any SNI-PEER entries. 3. Replace the SNI being tested. 4. Replace the SNI in slot 20. 5. If the test continues to fail, follow normal escalation procedures.

Continued on next page

Table 9-330. TEST #767 Packet Neighbor Link Test — *Continued*

Error Code	Test Result	Description/ Recommendation
123	FAIL	The SNI circuit pack cannot communicate with its neighbor via the packet path. 1. Fix any on-board errors (SNI-BD, EXP-INTF, and/or DS1C-BD) against the components of this fiber link by using **display errors** and **display alarms** and following the associated repair procedures. (Use the **list fiber-link** command to find the fiber link associated with this SNI. The **display fiber-link** command can then be used to find the endpoints of the fiber link and the DS1C circuit pack locations if this fiber link has a DS1 Converter Complex administered.) 2. Enter **display errors** and **display alarms** and follow the associated repair procedures for any SNC-BD error entries with corresponding on-board alarm entries. 3. Enter **display errors** and follow the associated repair procedures for any SYNC entries. 4. If this FIBER-LK has circuit, packet, and control path errors, check the lightwave transceiver connections or metallic connections. Use the LED states to verify whether the connections are correct. Also, a test fiber-link s command can be run to determine whether a fiber out of frame condition exists on the fiber link; the SNI Fiber Out-of-Frame Query (#989) reports whether a fiber out of frame condition exists for an SNI endpoint and the Expansion Interface Fiber Out-of-Frame Query test (#238) reports whether a fiber out of frame condition exists for an Expansion Interface endpoint. 5. Replace the lightwave transceivers if present. 6. Replace one of the endpoint boards. 7. Replace the other endpoint board. 8. Replace the DS1C circuit packs if a DS1C converter complex is administered on this fiber. 9. If this test continues to fail, follow normal escalation procedures.

Continued on next page

Table 9-330. TEST #767 Packet Neighbor Link Test — *Continued*

Error Code	Test Result	Description/ Recommendation
	PASS	The SNI can communicate with the peer SNIs and the neighbor over the packet path.

Failure Audit (#777)

This test is non-destructive.

This test queries the SNI for any existing failures and any unacknowledged cleared failure messages. Each failure generates an error and alarm entry against SNI-BD, SNI-PEER, or FIBER-LK. An unacknowledged cleared failure message is a message the SNI circuit pack sent to software indicating a previous failure is now gone and the SNI circuit pack did not receive a message from software indicating that the failure message was received by software.

If no failures are detected by the SNI circuit pack, this test will pass.

If this test reports failures, the results screen for the **test board** command will show **FAIL** with no FAIL code. The error log must then be displayed via **display errors** with category PNC to view all SNI-BD and FIBER-LK errors and category PNC-PEER to view all SNI-PEER errors.

Table 9-331. TEST #777 Failure Audit

Error Code	Test Result	Description/ Recommendation
	ABORT	Internal System Error 1. Retry the command at 1 minute intervals a maximum of 3 times. 2. If the test still aborts, follow normal escalation procedures.
2100	ABORT	Could not allocate the necessary system resources to run this test. 1. Retry the command at 1 minute intervals a maximum of 3 times. 2. If the test still aborts, follow normal escalation procedures.
2300	ABORT	The downlink message necessary to run this test could not be sent. 1. Retry the command at 1 minute intervals a maximum of 3 times. 2. If the test still aborts, follow normal escalation procedures.

Continued on next page

Table 9-331. TEST #777 Failure Audit — *Continued*

Error Code	Test Result	Description/ Recommendation
2301	ABORT	The software timer could not be set before sending the downlink message necessary to run this test. 1. Retry the command at 1 minute intervals a maximum of 3 times. 2. If the test still aborts, follow normal escalation procedures.
2306	ABORT	The SNI circuit pack is not responding to test requests sent by software. 1. Run the **test led switch-node** for the switch node that the SNI resides in to verify whether the LEDs on the board light. 2. If the LEDs on the other boards in the carrier light, but the LEDs on this board do not light, run test 760 via **test board UUCSS l** for the active SNC in this carrier. Wait 5 minutes and then try step 1 one more time. If the LEDs on this board still do not light, replace this board. Replacing an SNI may be service interrupting. Refer to the SNI-BD section for the procedure for replacing an SNI. 3. If none of the LEDs light for the boards in the same carrier as this board, fix any problems associated with the connectivity of this carrier to the SPE. Check **list fiber-link** to determine the fiber connections to this carrier. Check the LEDs on all SNIs and EIs and fix any fiber problems. Enter **display errors** and follow the associated repair procedures for any EXP-INTF error entries associated with the PPN. Also, follow the associated repair procedures for any SYNC, SNI-BD, SNC-BD, FIBER-LK, or SNI-PEER error entries. 4. Follow the procedure described above, SNI Manual Loopback to determine whether the circuit pack or the fiber connection is faulty. 5. If the test continues to abort, follow normal escalation procedures.

Continued on next page

Table 9-331. TEST #777 Failure Audit — *Continued*

Error Code	Test Result	Description/ Recommendation
	FAIL	The SNI circuit pack reported failures or retransmitted a cleared failure message. 1. If this is the first time this test was run, run the test again. If there were any previous failure messages that software did not acknowledge, this test will FAIL even if the failure messages indicate a FAIL to PASS transition, i.e., a problem has gone away. If this test is run twice and FAILs both times, then at least one problem still exists. 2. Fix any SNI-BD, SNI-PEER, and FIBER-LK errors by following the associated repair procedures. Use the **display errors** and **display alarms** commands with category PNC for SNI-BD and FIBER-LK and category PNC-PEER for SNI-PEER. Fix any problems found by referring to Table 9-324 on page S-82 or Table 9-175 on page F-10 in the FIBER-LK section. 3. If no SNI-BD, SNI-PEER, or FIBER-LK entries exist in the error and alarm logs, retry the command. 4. If the test continues to fail, follow normal escalation procedures.
	PASS	No problems are detected on the board.

Clear Firmware Counters (#982)

This test number is used to report unsuccessful results of the **clear firmware-counters** command. This is not an actual demand maintenance test. If the command aborts, refer to the error codes listed for Test #777.

SNI Fiber Out of Frame Query (#989)

This test is non-destructive.

The SNI circuit pack reports whether a fiber out of frame condition exists, whether a loss of signal condition exists, and whether the lightwave transceiver is present.

Table 9-332. TEST #989 SNI Fiber Out of Frame Query

Error Code	Test Result	Description/ Recommendation
2100	ABORT	Could not allocate the necessary system resources to run this test. 1. Retry the command at 1 minute intervals a maximum of 3 times. 2. If the test continues to abort, follow normal escalation procedures.
1415	ABORT	The lightwave transceiver is not present. 1. If a lightwave transceiver is not supposed to be present, do nothing. For example, an SNI connected to a DS1C circuit pack or an SNI with a metallic connection does not have a lightwave transceiver. 2. Otherwise, continue with the following steps. 3. Check the lightwave transceiver connections. 4. Replace the lightwave transceiver. 5. Replace the SNI circuit pack. 6. If the test continues to abort, follow normal escalation procedures.
2300	ABORT	The downlink message necessary to run this test could not be sent. 1. Retry the command at 1 minute intervals a maximum of 3 times. 2. If the test continues to abort, follow normal escalation procedures.

Continued on next page

Table 9-332. TEST #989 SNI Fiber Out of Frame Query — *Continued*

Error Code	Test Result	Description/ Recommendation
2301	ABORT	The software timer could not be set before sending the downlink message necessary to run this test. 1. Retry the command at 1 minute intervals a maximum of 3 times. 2. If the test continues to abort, follow normal escalation procedures.
2304	ABORT	SNI firmware is not able to run the test. 1. Retry the command at 1 minute intervals a maximum of 3 times. 2. If the test continues to abort, follow normal escalation procedures.

Continued on next page

Table 9-332. TEST #989 SNI Fiber Out of Frame Query — *Continued*

Error Code	Test Result	Description/ Recommendation
2306	ABORT	The SNI circuit pack is not responding to test requests sent by software. 1. Run the **test led switch-node** for the switch node that the SNI resides in to verify whether the LEDs on the board light. 2. If the LEDs on the other boards in the carrier light, but the LEDs on this board do not light, run test 760 via **test board UUCSS l** for the active SNC in this carrier. Wait 5 minutes and then try step 1 one more time. If the LEDs on this board still do not light, replace this board. Replacing an SNI may be service interrupting. Refer to the SNI-BD section for the procedure for replacing an SNI. 3. If none of the LEDs light for the boards in the same carrier as this board, fix any problems associated with the connectivity of this carrier to the SPE. Check **list fiber-link** to determine the fiber connections to this carrier. Check the LEDs on all SNIs and EIs and fix any fiber problems. Enter **display errors** and follow the associated repair procedures for any EXP-INTF error entries associated with the PPN. Also, follow the associated repair procedures for any SYNC, SNI-BD, SNC-BD, FIBER-LK, or SNI-PEER error entries. 4. Follow the procedure described above, SNI Manual Loopback to determine whether the circuit pack or the fiber connection is faulty. 5. If the test continues to abort, follow normal escalation procedures.
2500	ABORT	Internal System Error 1. Retry the command at 1 minute intervals a maximum of 3 times. 2. If the test continues to abort, follow normal escalation procedures.

Continued on next page

Table 9-332. TEST #989 SNI Fiber Out of Frame Query — *Continued*

Error Code	Test Result	Description/ Recommendation
141	FAIL	The SNI circuit pack has a fiber out of frame condition, but no loss of signal condition. Also, a lightwave transceiver is connected to the SNI circuit pack. 1. Check that the connected circuit pack is physically installed. The connected circuit pack is the other endpoint of the fiber-link if no DS1C complex is administered (check via **list fiber-link**). Otherwise, if a DS1C complex is administered, the connected circuit pack is the DS1C circuit pack connected to the SNI circuit pack. 2. Perform the "Fiber Fault Isolation Procedure" described in Chapter 5, "Responding to Alarms and Errors". 3. Replace this SNI circuit pack. 4. Replace the connected circuit pack. 5. If the test continues to fail, follow normal escalation procedures.
142	FAIL	The SNI circuit pack has a fiber out of frame condition, but no loss of signal condition. Also, no lightwave transceiver is connected to the SNI circuit pack. 1. Check that the connected circuit pack is physically installed. The connected circuit pack is the other endpoint of the fiber-link if no DS1C complex is administered (check via **list fiber-link**). Otherwise, if a DS1C complex is administered, the connected circuit pack is the DS1C circuit pack connected to the SNI circuit pack. 2. Perform the "Fiber Fault Isolation Procedure" described in Chapter 5, "Responding to Alarms and Errors". 3. Replace this SNI circuit pack. 4. Replace the connected circuit pack. 5. If the test continues to fail, follow normal escalation procedures.

Continued on next page

Table 9-332. TEST #989 SNI Fiber Out of Frame Query — *Continued*

Error Code	Test Result	Description/ Recommendation
143	FAIL	The SNI circuit pack has a loss of signal condition, but no fiber out of frame condition. Also, a lightwave transceiver is connected to the SNI circuit pack. 1. Check that the connected circuit pack is physically installed. The connected circuit pack is the other endpoint of the fiber-link if no DS1C complex is administered (check via **list fiber-link**). Otherwise, if a DS1C complex is administered, the connected circuit pack is the DS1C circuit pack connected to the SNI circuit pack. 2. Perform the "Fiber Fault Isolation Procedure" described in Chapter 5, "Responding to Alarms and Errors". 3. Replace this SNI circuit pack. 4. Replace the connected circuit pack. 5. If the test continues to fail, follow normal escalation procedures.
144	FAIL	The SNI circuit pack has a loss of signal condition, but no fiber out of frame condition. Also, no lightwave transceiver is connected to the SNI circuit pack. 1. Check that the connected circuit pack is physically installed. The connected circuit pack is the other endpoint of the fiber-link if no DS1C complex is administered (check via **list fiber-link**). Otherwise, if a DS1C complex is administered, the connected circuit pack is the DS1C circuit pack connected to the SNI circuit pack. 2. Perform the "Fiber Fault Isolation Procedure" described in Chapter 5, "Responding to Alarms and Errors". 3. Replace this SNI circuit pack. 4. Replace the connected circuit pack. 5. If the test continues to fail, follow normal escalation procedures.

Continued on next page

Table 9-332. TEST #989 SNI Fiber Out of Frame Query — *Continued*

Error Code	Test Result	Description/ Recommendation
145	FAIL	The SNI circuit pack has a fiber out of frame condition and a no loss of signal condition. Also, a lightwave transceiver is connected to the SNI circuit pack. 1. Check that the connected circuit pack is physically installed. The connected circuit pack is the other endpoint of the fiber-link if no DS1C complex is administered (check via **list fiber-link**). Otherwise, if a DS1C complex is administered, the connected circuit pack is the DS1C circuit pack connected to the SNI circuit pack. 2. Perform the "Fiber Fault Isolation Procedure" described in Chapter 5, "Responding to Alarms and Errors". 3. Replace this SNI circuit pack. 4. Replace the connected circuit pack. 5. If the test continues to fail, follow normal escalation procedures.

Continued on next page

Table 9-332. TEST #989 SNI Fiber Out of Frame Query — *Continued*

Error Code	Test Result	Description/ Recommendation
146	FAIL	The SNI circuit pack has a fiber out of frame condition, but no loss of signal condition. Also, no lightwave transceiver is connected to the SNI circuit pack. 1. Check that the connected circuit pack is physically installed. The connected circuit pack is the other endpoint of the fiber-link if no DS1C complex is administered (check via **list fiber-link**). Otherwise, if a DS1C complex is administered, the connected circuit pack is the DS1C circuit pack connected to the SNI circuit pack. 2. Perform the "Fiber Fault Isolation Procedure" described in Chapter 5, "Responding to Alarms and Errors". 3. Replace this SNI circuit pack. 4. Replace the connected circuit pack. 5. If the test continues to fail, follow normal escalation procedures.
	PASS	No problems associated with this test are detected on the SNI.

SNI-PEER (SNI Peer Link)

MO Name As It Appears in Alarm Log	Alarm Level	Initial System Technician Command to Run (a)	Full Name of MO
SNI-PEER	MAJOR	test board UUCSS s	SNI Peer Link
SNI-PEER	MINOR	test board UUCSS s	SNI Peer Link
SNI-PEER	WARNING	test board UUCSS s	SNI Peer Link

a. UU is the universal cabinet number (1 for PPN, 2 -44 for EPNs). C is the carrier designation (A, B, C, D, or E). SS is the number of the slot in which the circuit pack resides (01 to 21).

SNI Peers are Switch Node Interfaces residing on the same Switch Node Carrier. SNI-PEER maintenance involves testing of the links between SNI Peers. SNI-PEER errors are described on the following pages. For a full description of SNIs, including circuit pack replacement, see SNI-BD.

SNI-PEER Hardware Error Log Entries and Test to Clear Values

Table 9-333. SNI-PEER Hardware Error Log Entries

Error Type	Aux Data	SNI Slot†	Associated Test	Alarm Level	On/Off Board	Test to Clear Value
0*	0		Any	Any	Any	test board UUCSS r 1
1	any	2	Failure Audit (#777)	MAJ/MIN/ WAR	OFF	test board UUCSS r 1
257	any	3	Failure Audit (#777)	MAJ/MIN/ WAR	OFF	test board UUCSS r 1
513	any	4	Failure Audit (#777)	MAJ/MIN/ WAR	OFF	test board UUCSS r 1
769	any	5	Failure Audit (#777)	MAJ/MIN/ WAR	OFF	test board UUCSS r 1
1025	any	6	Failure Audit (#777)	MAJ/MIN/ WAR	OFF	test board UUCSS r 1
1281	any	7	Failure Audit (#777)	MAJ/MIN/ WAR	OFF	test board UUCSS r 1
1537	any	8	Failure Audit (#777)	MAJ/MIN/ WAR	OFF	test board UUCSS r 1
1793	any	9	Failure Audit (#777)	MAJ/MIN/ WAR	OFF	test board UUCSS r 1
2049	any	13	Failure Audit (#777)	MAJ/MIN/ WAR	OFF	test board UUCSS r 1
2305	any	14	Failure Audit (#777)	MAJ/MIN/ WAR	OFF	test board UUCSS r 1
2561	any	15	Failure Audit (#777)	MAJ/MIN/ WAR	OFF	test board UUCSS r 1
2817	any	16	Failure Audit (#777)	MAJ/MIN/ WAR	OFF	test board UUCSS r 1
3073	any	17	Failure Audit (#777)	MAJ/MIN/ WAR	OFF	test board UUCSS r 1

Continued on next page

Table 9-333. SNI-PEER Hardware Error Log Entries — *Continued*

Error Type	Aux Data	SNI Slot†	Associated Test	Alarm Level	On/Off Board	Test to Clear Value
3329	any	18	Failure Audit (#777)	MAJ/MIN/ WAR	OFF	test board UUCSS r 1
3585	any	19	Failure Audit (#777)	MAJ/MIN/ WAR	OFF	test board UUCSS r 1
3841	any	20	Failure Audit (#777)	MAJ/MIN/ WAR	OFF	test board UUCSS r 1

* Run the Short Test Sequence first. If all tests pass, run the Long Test Sequence. Refer to the appropriate test description and follow the recommended procedures.

† The slot location of the SNI at the other end of the peer link indicted by the SNI reporting the error.

Notes:

For **all** errors in the above table, the SNI circuit pack reporting the error is indicating that it has a problem with the control path, circuit path, or packet path to the SNI peer in the slot indicated on the error table.

First, the Failure Audit test (#777) should be run to confirm whether the error still exists.

If the SNI is reporting an SNI-PEER error against a slot that does not contain an SNI, either change circuit pack administration via **change circuit-pack** to unadminister the SNI, or insert an SNI into the indicated slot. **List configuration carrier** can be used to determine whether an SNI circuit pack is inserted. Otherwise, **display errors** and look at *all* of the SNI-PEER errors in the log. If either of the following two conditions are present, follow Procedure 2 below.

- Do many SNIs have SNI-PEER errors pointing to the same 2 adjacent SNIs? (See Table 9-334 below for adjacent SNIs.)
- Do 2 adjacent SNIs have SNI-PEER errors pointing to many other SNIs?

If neither condition is present, follow Procedure 1 below. When using either procedure, refer to SNI-BD or SNC-BD for circuit pack replacement instructions.

Table 9-334. Adjacent SNIs and Associated SNI-PEER Errors

Slot Numbers of Adjacent SNIs	Point to This SNI Pair
2, 3	1, 257
4, 5	513, 769
6, 7	1025, 1281
8, 9	1537, 1793
13, 14	2049, 2305
15, 16	2561, 2817
17, 18	3073, 3329
19, 20	3585, 3841

Procedure 1: Proceed through the following steps *until* the problem is resolved:

1. Perform the "Fiber Fault Isolation Procedure" described in Chapter 5, 'Responding to Alarms and Errors".
2. Replace the SNI pointed to by the SNI-PEER error type (see the SNI Slot column in Table 9-333 on page S-172, “SNI-PEER Hardware Error Log Entries”).
3. Replace the SNI reporting the SNI-PEER error.
4. Replace the active SNC.
5. If none of the above steps cleared this error, follow normal escalation procedures.

Procedure 2: If either of the two patterns described before are present, then the clock signal between active SNC and 2 Adjacent SNIs is suspect. Proceed through the following steps *until* the problem is resolved:

1. If only one SNC exists in this switch node carrier, replace the SNC. If two SNCs exist in this switch node carrier, perform the following steps:
    a. Set the standby SNC to active by executing **set switch-node-clock** UUCSS with the standby SNC’s location.
    b. If the problem persists, switch back to the previously active SNC via the **set switch-node-clock** command and go to step 2 below.

   c. If the problem went away, replace the SNC that was previously active. Then set the newly replaced SNC to active. If the problem returns, assume that the SNC that was just replaced was not at fault and go to step 2 below.

2. Replace the leftmost SNI from the pair of adjacent SNIs.
3. Replace the rightmost SNI from the pair of adjacent SNIs.
4. If none of the above steps cleared this error, follow normal escalation procedures. (This could indicate a problem with the switch-node-carrier backplane.)

System Technician-Demanded Tests: Descriptions and Error Codes

Always investigate tests in the order presented in the table below when inspecting errors in the system. By clearing error codes associated with the *Configuration Audit* for example, you may also clear errors generated from other tests in the testing sequence.

Order of Investigation	Short Test Sequence	LongTest Sequence	Reset Board Sequence	D/ND*
Configuration Audit (#759)	X	X		ND
Failure Audit (#777)	X	X		ND
Fiber Out of Frame Query (#989)	X	X		ND
Packet Neighbor Test (#767)	X	X		ND
Circuit Path Test (#755)	X	X		ND
Destructive Facility Test (#757)		X		D
Off-board Destructive Facility Test (#756)		X		D
Switch Node Interface Reset Test (#761)			X	D

* D = Destructive; ND = Nondestructive

For descriptions of these tests, refer to the SNI-BD section of this chapter.

SPE-SELE (SPE Select Switch)

MO Name As It Appears in Alarm Log	Alarm Level	Initial System Technician Command to Run	Full Name of MO
SPE-SELE	MAJOR	none	SPE Select Switch
SPE-SELE	WARNING	none	SPE Select Switch

The SPE Select Switch MO monitors the position of the SPE Select switches located on the front of each UN330B Duplication Interface board. Each switch may be in one of three possible positions: Auto, A selected, B selected. Both switches, one on the active Duplication Interface board and one on the standby, should be set to the same designation. The switches control selection of the active SPE and cause alarms as follows:

- If both switches are in the AUTO position, the SPE that is the healthiest, as determined by the state-of-health bits on the boards, is selected as active. No alarm is raised.
- If one SPE Select switch is in the AUTO position and one selecting either A or B carrier as active, or one switch selects A and the other selects B, the boards default to handling the selection of which carrier is active as if both switches were in the AUTO position. A WARNING alarm appears after one hour. The alarm is resolved 5 minutes after the switches are returned to identical positions.
- If both switches select either A carrier or B carrier active, then the Duplication Interface boards will force that carrier active (irrespective of state-of-health) and the red Override LED is lit. A MAJOR alarm is raised by SPE-SELE if the switches remain in these positions for more than 6 hours. The alarm is resolved within 5 minutes of the switches being returned to AUTO.

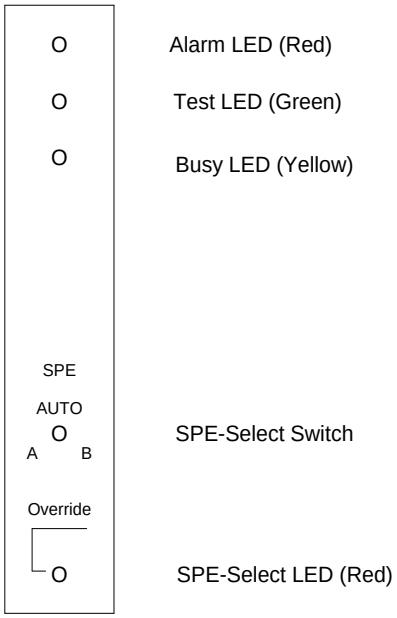

Figure 9-100. Duplication Interface Circuit Pack

Hardware Error Log Entries and Test to Clear Values

SPE Select Switch Error Log Entries					
Error Type	**Aux Data**	**Associated Test**	**Alarm Level**	**On/Off Board**	**Test to Clear Value**
0*	0	Any	Any	Any	
1(a)	0	none	WARNING	OFF	
257(b)	0	none	MAJOR	OFF	

* Check the position of the SPE-Select switches.

Notes:

a. Error 1 appears when one SPE Select Switch is in the AUTO position and the other is in the select A or select B position. Placing both switches in the AUTO position will retire the alarm immediately.

b. Error 257 appears when both SPE Select Switches are in the select A or select B position for more that 6 hours. Placing both switches in the AUTO position will retire the alarm immediately.

STBY-SPE (Standby SPE Maintenance)

MO Name As It Appears in Alarm Log	Alarm Level	Initial System Technician Command to Run	Full Name of MO
STBY-SPE	MAJOR	test spe-standby l	Standby SPE Maintenance
STBY-SPE	MINOR	test spe-standby l	Standby SPE Maintenance
STBY-SPE	WARNING	test spe-standby l	Standby SPE Maintenance

The general principles of SPE duplication, including the following topics, are discussed in Chapter 1, "Maintenance Architecture":

- Standby Maintenance Architecture
- Standby State-of-Health and Availability
- Handshake Communication
- Memory Shadowing and Refresh
- Maintenance Software
- Standby Initialization

Troubleshooting a duplicated SPE, and replacing SPE components, are discussed in Chapter 5, "Responding to Alarms and Errors". The SPE-Down or SPE-Locked interface is discussed in Chapter 4, "Initialization and Recovery".

Maintenance of the standby SPE is organized around the STBY-SPE maintenance object. It relies on documentation of the other SPE maintenance objects:

PROCR	SYSAM	MEM-BD
SW-CTL	H-ADAPTR	TAPE
DISK	DUPINT	DUP-CHL

Once a general SPE problem has been isolated to the level of one of these individual packs, the service documentation for that MO should be consulted. It is the responsibility of standby SPE maintenance described here to keep the standby SPE fully available for an interchange.

Standby Availability

Various factors affect the availability of the standby SPE:

- The condition of the individual hardware components of the standby SPE

- Standby memory content
- Standby State-of-Health (SOH)
- Standby SPE-Down
- System Time-of-Day

The health of both the active and standby is tracked as a State-of-Health (SOH) value. State-of-Health is discussed fully in Chapter 1, "Maintenance Architecture".

The SOH of the standby SPE can be determined with the "status spe" command. A complete description of this command and its output appears in Chapter 8, "Maintenance Commands". For the standby to be fully available, the fields (for the SPE with mode *standby*, where applicable) should read as follows:

Table 9-335. State of Health - Standby SPE Status

Field	Field Value
Duplicated?	yes
SPE Selected?	auto (otherwise, the SPE-Select switches will prevent any interchange)
Standby Busied	no
Standby Refreshed?	yes
Standby Shadowing	on
Standby Handshake?	up
Recent Spontaneous Interchange?	no
State-of-Health	functional

Any divergence from these conditions, except during system recovery or technician-initiated maintenance, requires immediate investigation.

Locking the Active SPE

Duplication Interface hardware supports the ability to lock the active SPE into active mode. On each Duplication Interface circuit pack is an SPE-SELECT switch which can be set in three positions: A, B, Auto. These are normally set with both switches on AUTO, allowing system software to govern which SPE is active. When the SPE-SELECT switches on both SPE's Duplication Interface circuit packs are set to the position A, then the SPE in carrier A is locked active and the B-carrier SPE is locked standby. Setting both to B locks the B carrier active. Any other combination of settings results in AUTO mode. *In locked mode, the system operates as if it is simplex:*

- The standby SPE is inaccessible to the active SPE and active G3-MT login.

- No SPE-interchange is possible.
- Handshake is down and memory shadowing is off.

WARNING:
Transition the system into the lock mode with extreme care. Always move the switches into the position designating the ***active*** *SPE carrier. Switching to a faulted standby can cause a total service outage.*

The locked state is intended for temporary use to prevent interchanges during maintenance sessions. Alarms are raised if the switches are left out of the AUTO position for an extended length of time (SPE-SEL).

To lock the SPEs, first determine which is active:

- The active Duplication Interface's yellow LED will be lit.
- **status spe** reports active/standby status of each SPE.

Making sure you are grounded, move the switches one at a time to the letter designating the active carrier. Wait a few seconds, then verify that the lock took effect:

- The red LED labeled OVERRIDE on both Duplication Interface circuit packs should be lit.
- **status spe** displays `spe-a locked` in the `SPE SELECTED` field if the A SPE is locked active. This verifies that internal software is aware of the lock state. The screen will also indicate that handshake is down, memory shadowing is off and the standby is not refreshed. The standby SPE is technically not in service while locked, and its SOH can vary.

To unlock the active SPE, move both SPE-SELECT switches back to AUTO. System software will automatically try to bring the standby SPE into full service, by establishing handshake, refreshing memory, and raising the standby's SOH if appropriate.

CAUTION:
When exiting the locked state, a spontaneous SPE interchange is possible if active SPE SOH is not functional. Always check first with ***status spe*** *(unless the interchange is desired).*

After exiting the locked state, make sure the standby returns fully to service (SOH functional). When the system is in the locked state, all alarms against the standby SPE (STBY-SPE), (except the WARNING alarm raised in the busyout state), are automatically cleared by the system.

Replacing SPE Circuit Packs

To replace any SPE circuit pack on a duplicated system, always use the "lock-and-power-down" procedure described fully in Chapter 5, "Responding to Alarms and Errors". This procedure allows replacements without service disruption, and guarantees that the system is returned to full normal operation.

Memory Shadowing

Memory shadowing is used to keep the standby SPE's memory content up-to-date relative to the active SPE's memory. A standby SPE that has just rebooted, exited lock mode or just been released from busyout must undergo this full re-initialization. System software tracks the operation and raises a major alarm when refresh failure occurs. If shadowing stays on, system software automatically tries to refresh again 5 minutes later.

Generally, memory shadowing should always remain on unless:

- The standby SPE is undergoing any restart.
- The active SPE is undergoing a restart level of 2 or greater.
- The active SPE is locked.
- The standby SPE is busied out.

In any other situation, it is an error condition for shadowing to be off. The first two situations are transitory and shadowing should automatically be restored within 10 minutes. If shadowing has been on for several minutes, it is an error condition for the standby not to be refreshed. A standby SPE with no critical component alarms that is either not refreshed or does not have shadowing on should have SOH level *not refreshed.*

Busyout of the Standby SPE

The standby SPE can be placed in the state of maintenance busyout with the command **busyout spe-standby**. This creates the following conditions:

- The SOH of the standby SPE is kept artificially at level *partially-functional* regardless of the actual state of its components.
- Memory shadowing is turned off. Standby memory content is not in agreement with that of the active SPE
- A Warning alarm is raised against STBY-SPE with error type 18. This Warning alarm supersedes all other alarms against STBY-SPE.
- The **status spe** field `Standby Busied?` will display `yes`.

release spe-standby causes the following:

- The standby SPE's SOH returns to the appropriate level based on its component alarms.

- After verifications, software turns on shadowing and refreshes the standby's memory.

Busyout is used to discourage the likelihood of interchange and prevent side effects of memory shadowing. For example:

- When it is necessary to run the long demand test sequence for the duplication-interface hardware or to reset the standby SPE's Packet-interface circuit packs
- To allow destructive testing of components relevant to shadowing (packet-interface, memory, or duplication interface packs).

When the standby SPE is busied out, handshake communication is maintained if possible. The standby SPE can be busied-out at any time the G3-MT interface is available, including when the system is initializing or when the active SPE is locked. Busyout applies to only one instance of the SPEs. If SPE B is busied out and an SPE interchange occurs A-carrier SPE is not busied out.

When releasing a standby SPE from the busyout state, make sure that the standby SPE is brought fully back to service. Wait until the standby is refreshed and its SOH returns to level *functional* to make sure repair actions did not disable the standby SPE.

Initialization: Bringing the Standby SPE Up

When the standby SPE has been out of service or is first coming up, SPE software executes the following steps:

1. Establishes handshake communication
2. Raises the standby SPE's SOH to *not refreshed* if it has no critical component alarms, or *partially functional* if it does have critical component alarms
3. Tests for component mismatch (test number 920)
4. Turns on memory shadowing
5. Refreshes standby memory
6. If there are no critical-component major alarms, raises the standby SPE's SOH to *functional*

This normally takes about 5 minutes. Should a step of this initialization sequence fail, the step is retried until it succeeds. The failed condition is alarmed so that it can be diagnosed and corrected.

Other Mechanisms: Status Command and SPE-Down Interface

There are certain maintenance tools available for dealing with the standby SPE which can be used regardless of the state of handshake communication or memory shadowing.

Always start with and continue to use **status spe** to determine completely the status of the standby SPE.

When handshake communication is down, there is no access from the usual G3-MT connection to test the standby. In this case, locking the active SPE with the switches has no harmful effect on switch service and allows terminal access into the standby SPE via the SPE-Down or SPE-Locked Interface. With this interface, you can run low level tests on individual components and request reboots of the standby SPE. Whenever the SPEs are locked and the SPE-Locked Interface is in use. Instructions on how to bring up and use this interface are described in Chapter 4, "Initialization and Recovery". When using this tool, do not unlock the SPE until all tests of standby SPE components have passed.

Recent Interchange Mode

The event of a spontaneous SPE interchange is intended to be a rare event and reflects a serious hardware failure on the formerly active SPE. Generally, when such an interchange has occurred, that SPE (now standby) requires diagnosis and repair action. There should be information in the error and alarm logs to indicate the specific problem. System software will attempt to establish handshake communication with the SPE, refresh its memory, bring it into service as a standby SPE, and diagnose its problems.

Regardless of any success in bringing that standby SPE into service, software will not improve the SOH of that SPE until either:

- Technician-demanded testing addresses the problem
- One hour has passed since the interchange

This mode, called Recent Interchange Mode, is reported on the **status spe** screen and serves to prevent further interchanges from occurring too quickly. Additionally, a minor alarm with error 103 is logged against STBY-SPE and the SOH of that SPE is allowed to get no better than *partially functional*. *Troubleshooting a Duplicated SPE* in Chapter 5, "Responding to Alarms and Errors" describes an approach to diagnosing problems under this condition.

There are two ways in which the standby SPE can exit recent interchange mode.

a. You can run **test spe-standby long clear** and wait until all the tests of STBY-SPE have completed. (this runs tests of *all* components of the standby SPE in addition to those for STBY-SPE). The first test of the sequence (#855) fails, because the standby SOH is at level *partially*

functional. The execution of this sequence clears the minor alarm against STBY-SPE and allows normal treatment of the standby SPE. If the standby is refreshed and has no major alarms against critical components, its SOH will be allowed to improve to *functional*.

b. Alternately, when one hour has passed since the last spontaneous interchange, system software automatically transitions the standby SPE out of recent interchange mode. The minor alarm clears and the standby SPE's SOH level is allowed to go to its appropriate value (typically *functional* if there are no major component alarms and it is refreshed).

Resolving Error Conditions on the Standby SPE

Divergence of the standby SPE from the state of full availability involves one of the following events:

- Handshake communication is down
- Memory shadowing is off
- The standby SPE is not refreshed
- The standby SOH is not *functional*

A hierarchical approach is recommended in the above order. Follow the steps presented in the following diagram.

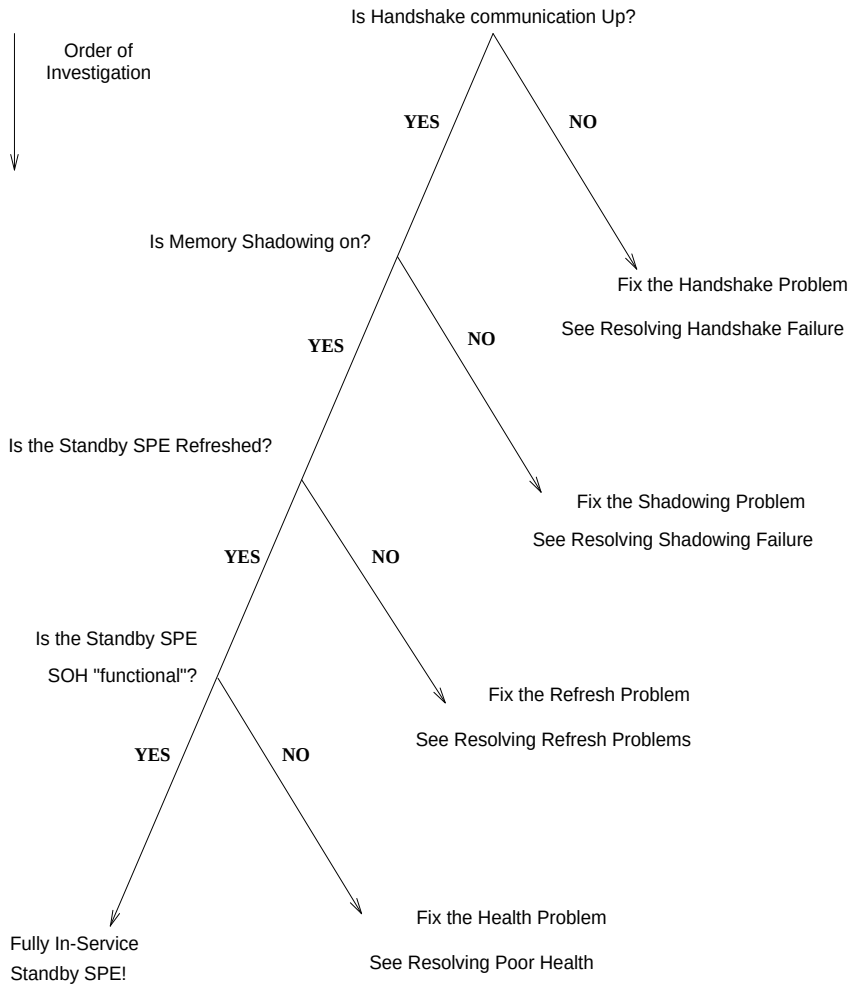

Figure 9-101. Resolving Standby-SPE Errors

Resolving Handshake Failure

When handshake fails, a major alarm with error 1 is repeatedly logged against STBY-SPE reflecting the fact that over a 2 minute period, no successful communication has occurred with the standby SPE. When the system is in lock mode, handshake is taken down with no alarm or error logged. When the standby SPE is busied out, handshake communication is kept up. If handshake

should fail during busyout, the major alarm will not appear, but error 1 and the usual busyout warning alarm with error 18 will be logged. You can always determine if handshake is up with **status spe**.

To restore handshake, proceed through the following steps.

1. Make sure that the SPE is not locked, and that it has power. Resolve any CARR-POW alarms on the standby SPE carrier. (If the standby SOH is partially functional or better, you can assume that the standby SPE has power.)
2. Busyout the standby SPE and run **test dup long**. Some DUP-CHL tests may abort due to the absence of handshake. If any tests *fail*, follow procedures in DUPINT and then DUP-CHL to resolve the problem. If you replace any DUPINT hardware, wait to see if the standby SPE can be fully restored to service; if it cannot, escalate the problem.
3. If the above tests did not fail, lock the SPEs with the SPE-select switches and use the SPE-down interface to test the standby components as described in Chapter 4, "Initialization and Recovery". If all tests pass, proceed to the next step. Replace any component that fails testing. (Use the lock-and-power-down technique.) Bring the SPE back up as described in Chapter 4, "Initialization and Recovery". If handshake cannot be established after a replacement, follow normal escalation procedures.
4. With the standby still busied out, issue the command **r** to reboot the standby SPE and immediately unplug the STANDBY terminal connector. The standby should still be busied out. Wait for the yellow LED on the standby Processor to begin flashing, unlock the SPEs, and monitor the standby with **status spe**.
5. If the LED fails to flash, or if handshake is not established, escalate the problem.
6. If handshake is established, release the standby SPE from busyout and monitor its recovery with **status spe**. If the onset of memory shadowing or refresh causes handshake to fail, then suspicion is cast on these standby circuit packs:

   - DUPINT
   - PKT-INT
   - MEMORY
   - MSSNET

   Replace each of these in the standby in the above order, using lock-and-power-down. For each one, bring up the standby SPE and wait to see if handshake and memory refresh succeed. If no such replacement fixes the problem, follow normal escalation procedures.

Resolving Shadowing Failure

This section addresses the situation in which handshake communication is up, but memory shadowing is not on after reasonable initialization time, or is repeatedly turning on and off. If the onset of memory shadowing is causing handshake failure, see the preceding section.

The following conditions prevent memory shadowing:

- Busyout of the standby SPE
- Locking of the SPEs by means of the SPE-select switches
- Alarms against components relevant to shadowing
- A mismatch between the hardware configurations of the active and standby SPEs
- Incomplete initialization of the standby after a restart

When memory shadowing is not on, system software checks every 30 seconds to see if the above conditions are gone, allowing it to restore shadowing. Examine the Hardware Error Log for any of the following indications.

STBY-SPE Error 257

This usually represents inhibiting of memory shadowing by the standby SPE. This can occur if the standby SPE is undergoing any level of restart or if the standby PKT-INT circuit pack is being reset. Typically this condition clears quickly. In the case that the standby SPE has restarted, there should be an STBY-SPE error 514 logged. If the 257 error persists with handshake staying up, look for problems with the standby PKT-INT board (red LED). It may be necessary to reset the standby PKT-INT board (**reset packet-interface**) to clear the inhibiting of shadowing. Consult PKT-INT in Chapter 9, "Maintenance Object Repair Procedures".

STBY-SPE Error 260

This indicates that the mechanism in the active SPE's Duplication Interface circuit pack to turn on shadowing has somehow failed. When this occurs, busyout the standby SPE and run **test dup long**. Follow instructions for DUPINT.

STBY-SPE Error 1537

This error indicates a component mismatch between the active and standby SPEs. Use **list config control** to determine what components are in the PPN carriers A and B. Correct any mismatches. Use the lock-and-power-down method described in Chapter 5, "Responding to Alarms and Errors" to replace circuit packs.

DUPINT or DUP-CHL Alarms

As long as any alarms against either of these MOs persist, memory shadowing will not be turned on. Consult the appropriate section in Chapter 9, "Maintenance Object Repair Procedures".

Standby PKT-INT Major Alarms

These prevent memory shadowing. Consult PKT-INT in Chapter 9, "Maintenance Object Repair Procedures". It may be necessary to reset the board (**reset packet-interface**).

Standby MEM-BD Major Alarms

These prevent memory shadowing. Consult MEM-BD in Chapter 9, "Maintenance Object Repair Procedures".

When you observe any of the above problems, first busyout the standby SPE, then fix the given problem (usually with a lock-and-power-down replacement), then release the standby SPE.

If any of the above problems persist, or if none of them appears but shadowing remains off in the presence of good handshake, escalate attention to the problem.

Resolving Refresh Problems

It can happen that handshake communication and memory shadowing can both be maintained to a standby SPE, but for some reason that SPE cannot be completely refreshed. In this case, one must distinguish between delays in refresh completion and outright failure. This section addresses the situation in which shadowing remains on, handshake remains up, but refresh will not complete.

Delays in Refresh

Under extremely heavy occupancy loads, standby refresh can be delayed but it is still expected to complete within 10 minutes of the time when memory shadowing was turned on. You should not see delays greater than this without some STBY-SPE alarm.

Failure of Refresh

The refresh operation occurs in two steps:

- Refresh of Packet Interface dual port RAM (very quick execution)
- Refresh of all memory on all memory boards

A failure can occur in either of these steps. When refresh fails, STBY-SPE error code 1281 is logged. The auxiliary data indicates which aspect of refresh failed. Aux code 1383 indicates that the memory board part has failed. This typically indicates a problem with *active* SPE memory circuit packs. Execute the long test sequence against both active SPE memory circuit packs and consult MEM-BD in Chapter 9, "Maintenance Object Repair Procedures". If no problems are revealed in the memory long test sequence, but memory refresh persists in failing with error 1281 error aux 1383, escalate the problem.

Error code 1281 with auxiliary data 1381 indicates that refresh of the packet-interface dual port RAM has failed. If this persists, one should look for problems with either active SPE or standby SPE packet-interface boards. Follow the procedures outlined in PKT-INT to fully test the active SPE's Packet-interface. Note that, since the standby SPE is not refreshed, one cannot execute the long demand test sequence on the standby Packet Interface. One can however trigger a reset of that circuit pack. If the active PKT-INT passes all tests of the long sequence and if the standby PKT-INT successfully resets, the problem should clear. If error 1281 aux 1381 persists, escalate the problem.

Error code 1281 with auxiliary data 1380 indicates that memory shadowing was turned off during refresh and the refresh has therefore terminated in failure. This situation should be treated as a shadowing failure and approached as described in the section *Resolving Shadowing Failure*. If memory shadowing is restored, but refresh again fails with code 1380, escalate attention to the problem.

One particular way memory or PKT-INT refresh can be led to fail is by inserting one of these circuit packs into its slot without powering down the carrier. If this happens, it may be necessary to cycle power on the given carrier and let the LMM run all tests of components on the carrier to clear the problem. If such an SPE is in standby mode, **reset spe-standby 4** would also cause the appropriate initialization to occur. Always follow the lock-and-power-down approach to replace circuit packs on the standby SPE.

Resolving Poor Health

It can happen that a standby SPE is properly maintaining handshake communication, shadowing is on and the standby is fully refreshed, but for some reason the SOH of that standby SPE remains at a level other than *functional*.

For example, in a heavily loaded system, the standby SOH may temporarily stay at *not refreshed*, but eventually it should clear. Once refresh completes, system software begins an effort to improve the standby SOH from *not refreshed* to *functional*. This effort can be delayed, but within a few minutes one should see the change. If one sees an indefinite persistence of this health level, in an otherwise perfect standby SPE, escalate the problem. This should be an extremely rare event.

If the standby SOH Stays at *partially functional*, either the standby SPE is in *recent interchange mode* or there is a major alarm against some critical standby

component (seeTable 9-335 on page S-181). For the first case, verify the situation with **status spe** and then clear the recent interchange mode by executing **test spe-standby long**. Wait until at least the first four tests of the sequence complete, then cancel out of the command. The standby SOH should eventually be raised to *functional.* In the second case, check the alarm log to see if there is any major alarm against any component of the standby SPE. If you find one, fix that problem, (usually by replacing the circuit pack). Then the SOH problem should eventually clear. If you lock-and-power-down the standby SPE to replace the given pack, you'll need to test it while in locked mode until all tests pass and then unlock and wait for system software to re-initialize the standby SPE. Only then should you expect standby SOH to be improved to level *functional.*

If neither the recent interchange mode nor a standby component alarm exists, but standby SOH persists at level *partially functional*, escalate the problem.

Hardware Error Log Entries and Test to Clear Values

STBY-SPE Error Log Entries					
Error Type	**Aux Data**	**Associated Test**	**Alarm Level**	**On/Off Board**	**Test to Clear Value**
0*	0	Any	Any	Any	test spe-standby l
1(a)		Standby SPE Handshake Test (#919)	MAJOR	OFF	
18(b)		busyout spe-standby	WARNING	OFF	rel spe-standby
103(c)		None	MINOR	OFF	test spe-standby l
257(d)		standby SPE status query (#855)	MAJOR	OFF	
260(e)		standby SPE status query (#855)	MAJOR	OFF	
514(f)		None	MAJOR	OFF	
770(g)		standby SPE TOD Comparison Test (#858)	MINOR	OFF	test spe-standby l
1025(h)		standby SPE status query (#855)	MAJOR	OFF	test spe-standby l
1281(i)	any	standby SPE status query (#855)	MAJOR	OFF	
1537(j)	any	standby SPE configuration Matchup test (#920)	MAJOR	OFF	test spe-standby l

* Run the Short Test Sequence first. If all tests pass, run the Long Test Sequence. Refer to the appropriate test description and follow the recommended procedures.

Notes:

a. Indicates that a single handshake attempt has failed. Use "status spe" to see if handshake is down. If "status spe" indicates that handshake is up, ignore this error. If handshake is down, see "Resolving Handshake Failure" on page S-187.

b. Presence of this error indicates that the standby SPE has is busied out. When busied out, standby SPE's health is kept at the level *partially functional* and memory shadowing is kept off.

c. Error 103 indicates that a spontaneous interchange has taken place. This lowers the now standby SPE's state-of-health to *partially functional*, raises a MINOR alarm against the standby SPE, and invokes recent interchange mode (anti-thrashing). After one hour, or entering **Test spe-standby long** or **busyout spe-standby**, the alarm clears, recent interchange mode is lifted, and the standby's state of health assumes the appropriate value (usually *functional*).

   After a spontaneous SPE interchange has occurred, the Alarm Log retains a record of any MAJOR ON-BOARD alarm against an SPE component that took place before the interchange. This record is retained for three hours and may indicate the cause of the interchange when testing is not possible or conclusive. If handshake has not been restored (check with **status spe**), replace the alarmed circuit pack on the standby SPE. If handshake is up, and such an alarm is logged against SW-CTL, replace the standby MSSNET circuit pack. If handshake is up, and such an alarm is logged against one of the other SPE components, execute a **test long clear** of the alarmed standby component and follow repair instructions for that maintenance object in Chapter 9, "Maintenance Object Repair Procedures".

d. This error represents inhibiting of memory shadowing by the standby SPE. If this error occurs accompanied by error 514, then the standby SPE has reset, so wait 5 minutes for this condition to clear. If the 257 error persists, or did not occur with a 514, then how you proceed depends on whether handshake is up. If handshake is not up, deal with the handshake failure problem (see "Resolving Handshake Failure" on page S-187). If handshake is up, look for errors or red LEDs indicting the standby packet-interface circuit pack or either of the duplication-interface circuit packs. If such problems exist consult the appropriate MO documentation. When no PKTINT errors or alarms are present, the PKTINT may still be the cause of the problem. Try **reset packet-interface [a|b]** to reset the standby PKTINT and wait two minutes, after which shadowing should be turned on. If 257 continues to persist, with handshake up, and no associated packet-interface or duplication-interface problems, follow normal escalation procedures.

e. This error indicates that shadowing could not be turned on due to a problem with the duplication-interface hardware. **Busyout spe-standby**, run **test duplication-interface long**, and consult the DUPINT section.

Once all tests of duplication-interface have passed, and all alarms against it have cleared, **release spe-standby** and wait 10 minutes for normal initialization to complete. If error 260 recurs, escalate the problem.

f. This error indicates that the standby SPE has been reset. Wait 5 minutes and then use "status spe" to see if the standby SPE is refreshed. If so, ignore the 514 error. If not, or if 514 recurs frequently, then lock the standby SPE and proceed to trouble-shoot it with the SPE-Down Interface. If all SPE-Down Interface tests pass, and error 514 recurs, then there is probably a software problem in the standby SPE: follow normal escalation procedures.

g. Indicates that the two Time-of-Day (TOD) clocks of the active and standby SPEs were detected to be more than 30 seconds apart. Run the short test sequence on each of the two SPEs' SYSAM circuit packs (see service documentation for TN1648). If any of these tests fail, fix the problem with that SYSAM pack (as described in TN1648 service documentation). If no SYSAM tests fail, and if the 770 persists, then replace the standby SYSAM pack (via the lock-and-power-down approach) and wait for the repaired standby SPE to initialize again (after unlocking). If, after all this, the 770 persists, then, once the standby SPE is fully refreshed and of *functional* health, perform a planned SPE interchange ("reset system interchange") and replace the now-standby (other) SYSAM pack (again: use lock-and-power-down). Now let the standby re-initialize. If, the 770 error persists, escalate the problem.

h. This indicates that the standby SPE is down (has a power or sanity problem) and is associated with a *non-functional* SOH level (as revealed by "status spe"). Check for any power alarms (CARR-POW) and deal with them. If none, trouble-shoot the standby SPE by locking and using the SMT. Do not unlock the standby SPE until all SMT tests of it have passed.

i. Represents an instance of refresh failure. Look at the auxiliary data associated with the error. There are the following possibilities:

- Aux data 1380

  This indicates that memory shadowing was turned off during refresh. Proceed as you would to solve a shadowing problem (see the section *Resolving Shadowing Failure*). If shadowing returns, wait 10 minutes for the system to automatically retry refresh. Also, problems with the standby PKT-INT might lead standby software to turn off shadowing during refresh. So look for a red LED on the standby PKT-INT. If you find this, follow PKT-INT service documentation to repair. Then wait for the automatic retry of refresh.

- Aux data 1381

  This indicates a failure of PKT-INT refresh. Consult PKT-INT service documentation to test and repair both active and standby PKT-INTs while the standby is not refreshed. Then wait for the automatic retry of refresh.

- Aux data 1383

  This indicates that refresh of one of the memory packs has failed. Typically this indicates a problem with one of the active SPE MEM-BDs. Consult MEM-BD service documentation of execute the long test sequence on these packs. Fix any problems you encounter. Then wait for the automatic retry of refresh.

- any other value

  System software problem; escalate the problem.

If all memory and packet-interface packs pass all test and refresh failure persists, escalate the problem.

j. This error indicates a possible mismatch in hardware configuration between active and standby SPEs for other than disk and tape components. Auxiliary data indicates the general area of the mismatch:

- Aux data 1374

  Indicates a mismatch of PKT-INT circuit packs

- Aux data 1375

  Indicates a mismatch of MEM-BD circuit packs

- Aux data 1376

  Indicates a mismatch of Processor, SYSAM, DUPINT or MSSNET circuit packs

If handshake is up, use the "list config control" command to compare components of the two SPEs; then verify and correct the discrepancy. If no discrepancies are revealed, escalate the problem. If handshake is down, fix that problem (see "Resolving Handshake Failure" on page S-187).

System Technician-Demanded Tests: Descriptions and Error Codes

Always investigate tests in the order presented in the table below when inspecting errors in the system.

Order of Investigation	Short Test Sequence	Long Test Sequence	D/ND*
Standby SPE Status Query Test (#855)	X	X	ND
Standby SPE Handshake Test (#919)	X	X	ND
Standby SPE Time-of-Day Comparison Test (#858)	X	X	ND
Standby SPE Configuration Matchup Test (#920)		X	ND

* D = Destructive; ND = Nondestructive

reset spe-standby [1|2|3|4] executes a restart of the specified level on the standby SPE. It can be used to attempt to clear certain apparent software problems. Handshake must be up. Any standby restart causes memory shadowing to be turned off, requiring several minutes for refresh to complete.

Standby SPE Status Query Test (#855)

This test *does not require handshake communication.* It reads the active SPE's duplication interface circuit pack hardware register to determine standby SOH, status of the lock switches, and whether shadowing is currently turned on. It updates all internal status data kept about the standby SPE (which can be read via the "status spe" command). This test is considered to pass if standby SOH is *functional*, memory shadowing is turned on and the standby memory is fully refreshed. It returns different failure codes depending of which of these conditions is not met. Abort codes reflect that the status data could not be read.

Table 9-336. TEST #855 Standby SPE Status Query Test

Error Code	Test Result	Description/ Recommendation
1330	ABORT	Test cannot run due to duplication-interface hardware failure. 1. **busyout spe-standby** 2. **test duplication-interface long** 3. Proceed according to the DUPINT and DUP-CHL service documentation in this chapter. 4. If all DUPINT tests pass, rerun command and if failure persists, escalate the problem.
1338	ABORT	Test cannot run because a planned SPE interchange is in progress 1. Wait for the planned SPE interchange to complete (this might have been stimulated by a craft request or by scheduled maintenance). If planned interchange completes and the problem still persists, follow normal escalation procedures.
1321	FAIL	Test failed because the SPEs are in locked mode. 1. Check that the SPE-SELECT switches on the two DUPINT packs agree with this. This failure will clear once the SPEs are unlocked. If it does not, follow normal escalation procedures.

Continued on next page

Table 9-336. TEST #855 Standby SPE Status Query Test — *Continued*

Error Code	Test Result	Description/ Recommendation
1322	FAIL	Test failed because memory shadowing is off (but not inhibited). When not inhibited by the standby SPE, memory shadowing can be off for the following reasons: 1. Shadowing has not been turned on yet (temporary condition). To allow for this, the test again (or **status spe**) after 5 minutes to see if shadowing is then on. 2. There is a failure in the duplication-interface hardware: to allow for this, look for errors or alarms against the duplication-interface hardware (DUPINT and DUP-CHL): address these according to duplication-interface documentation. Then re-run the test. 3. Handshake has not been established between the two SPEs: use "status spe" to see if handshake is up. If it is not, address that problem according to the section 'Resolving Handshake Failure" on page S-187. 4. There is a hardware configuration mismatch between components of the two SPEs. Look for error 1537 in the hardware error log and use "list config control" to identify the hardware discrepancy between SPEs. Fix this. 5. There is a major alarm against the memory (MEM-BD), packet-interface (PKT-INT) or switch-control (SW-CTL) circuit packs of the standby SPE. Look for alarms against these and correct the problem. If all these possibilities have been addressed and shadowing is still not on, follow normal escalation procedures.

Continued on next page

Table 9-336. TEST #855 Standby SPE Status Query Test — *Continued*

Error Code	Test Result	Description/ Recommendation
1324	FAIL	Test failed because standby SPE has *partially functional* SOH; 1. Use "display alarms" to see alarms against standby SPE components. 2. If a MINOR alarm is active against the current carrier of STBY-SPE, associated with an error 103, then clear this condition with "test spe-standby long". If a WARNING alarm exists against STBY-SPE, use "status spe" to see if the standby is busied out. If so, "release spe-standby" will clear the health problem. 3. Use "status spe" to see if handshake is up. If it is not, deal with that problem according to the section "Resolving Handshake Failure" on page S-187. 4. Otherwise look for a MAJOR, ON-BOARD alarm against the processor (PROCR), memory (MEM-BD), switch-control (SW-CTL), packet-interface (PKT-INT), or SYSAM circuit packs of the standby SPE. Using the lock-and-power-down approach, replace the offending circuit pack on the standby SPE. Consult the documentation for that component to clear its alarms. Once the alarm against the offending component clears, the SOH of the standby SPE will automatically improve from the *partially functional* level. If error 1324 persists and either none of the above cases is true or you have fixed all of these particular problems, escalate the problem.

Continued on next page

Table 9-336. TEST #855 Standby SPE Status Query Test — *Continued*

Error Code	Test Result	Description/ Recommendation
1325	FAIL	Test failed because memory shadowing is off due to its being inhibited from the standby SPE 1. This can be a temporary condition, wait 5 minutes and run the test again. 2. If handshake is not established (use **status spe** to see this), deal with that problem according to the preceding section 'Resolving Handshake Failure" on page S-187. 3. Rerun the test; if the same 1325 failure recurs, look for problems with the duplication-interface circuit packs (both SPEs) or with the standby SPE's packet-interface pack (look for red LEDs on these). Fix these problems according to the service documentation for these packs. 4. If no such problems are found, and you still get 1325 failure, follow normal escalation procedures.
1326	FAIL	Test failed because standby memory is not refreshed. 1. Retry the test (or "status spe") after 10 minutes, to see if standby is then refreshed. 2. If 1326 failure persists, follow normal escalation procedures.
1329	FAIL	Test failed because standby SPE has *non-functional* SOH; this means that the standby SPE is down. 1. Look for power alarms (CARR-POW) against the standby SPE carrier; address these. 2. Otherwise, lock the standby SPE and trouble-shoot it with the SMT (as you'd diagnose any down SPE. If you cannot revive the standby SPE or if, upon getting it out of the SPE-down state, error 1339 persists for this test, follow normal escalation procedures.
	PASS	Standby SPE is fully in service (SOH functional, memory content refreshed).

Standby SPE Time-of-Day Comparison Test (#858)

This test, available only when handshake communication is up, compares the SYSAM board's Time-of-Day clock values in the two SPEs. The test passes if the two clocks differ by less than 20 seconds. Failure of this test means that the two clocks have drifted apart but that each clock appears to be moving forward. Having the two TOD clocks more than 20 seconds apart can make spontaneous SPE interchanges disruptive to the point of dropping calls. Repeated failure of this test indicates that one or both of the two SYSAM packs will have to be replaced.

Table 9-337. TEST #858 Standby SPE Time-of-Day Comparison Test

Error Code	Test Result	Description/ Recommendation
1000 2029	ABORT	Either of these codes indicates that the test cannot run because internal resources cannot be allocated to read active clock. 1. Consult SYSAM service documentation for time-of-day clock tests.
1338	ABORT	Test cannot run because a planned SPE interchange is pending. 1. Wait for the planned interchange to complete, then for handshake to come up, then re-run test on newly standby SPE.
1339	ABORT	Test cannot run because handshake communication is not up. 1. Wait 5 minutes and try test again. If handshake is still not up (you get a 1339), solve the handshake problem as described in "Resolving Handshake Failure" on page S-187.
1346	ABORT	Test could not read standby SPE's TOD clock. 1. Test standby SPE's SYSAM and consult that section in this chapter.
1377	ABORT	A-carrier SPE's clock is not moving forward. 1. Test A-carrier SYSAM's time-of-day clock according to SYSAM service documentation.

Continued on next page

Table 9-337. TEST #858 Standby SPE Time-of-Day Comparison Test — *Continued*

Error Code	Test Result	Description/ Recommendation
1378	ABORT	B-carrier SPE's clock is not moving forward. 1. Test B-carrier SYSAM's time-of-day clock according to SYSAM service documentation.
2000	ABORT	Effort to read the clock timed out. 1. Test each of the two SPE's SYSAMs (test maint {1a|1b}) as described in SYSAM service documentation. Once these all pass, repeat this test.
	FAIL	Standby TOD clock differs from active's by more than 20 seconds. 1. Wait 1 minute; repeat the test. If test passes, there is no problem. 2. If test fails, use the lock-power-down approach to replace the TN1648 SYSAM circuit pack on the standby SPE. After the repaired standby SPE is fully initialized (handshake has been re-established), repeat the test. 3. If the test fails again, run it again it 1 minute later. If it fails again, perform a planned SPE interchange and wait for it to complete, Replace the standby SYSAM pack with another new replacement pack. If this still fails to clear the problem, follow normal escalation procedures. Note that this repair procedure requires two extra SYSAM circuit packs.
	PASS	The two SPE's TOD clocks are within tolerable limits of one another.

Standby SPE Handshake Test (#919)

This test causes software to send a handshake request message to the standby SPE (this is the same handshake request message sent every 30 seconds automatically by the software). For this test to pass, standby software must respond to this message in less than 3 seconds. Persistent failure of this test indicates that handshake communication is down (as can be discerned from the "status spe" command). This should be dealt with as described in the preceding section 'Resolving Handshake Failure" on page S-187.

Table 9-338. Test #919 Standby SPE Handshake Test

Error Code	Test Result	Description/ Recommendation
1321	ABORT	Test cannot run due to SPEs being locked. 1. Inter-SPE communication is not possible while in locked mode. Verify that SPEs are locked with lock switches. Handshake communication may resume once the SPEs are unlocked. If error 1321 persists when the system is not in locked mode, escalate attention to the problem.
1330	ABORT	Test cannot run due to problem in DUPINT hardware. 1. Test the duplication-interface hardware according to the service documentation for DUPINT and DUP-CHL. If error 1330 persists with no DUPINT hardware problems, escalate the problem.
1338	ABORT	Test cannot run due to planned SPE interchange pending. 1. Wait for the planned SPE interchange to complete, then retry the test. If error 1338 persists with no interchange in progress, escalate the problem.

Continued on next page

Table 9-338. Test #919 Standby SPE Handshake Test — *Continued*

Error Code	Test Result	Description/ Recommendation
	FAIL	Standby SPE did not respond to handshake request within 3 seconds. 1. Wait 2 minutes and try the test again. 2. If test fails again, use "status spe" to see if handshake communication is up. If it is not and there is a STBY-SPE MAJOR alarm, then deal with the problem according to the preceding section 'Resolving Handshake Failure" on page S-187. 3. Otherwise, if the problem persists, follow normal escalation procedures.
	PASS	Handshake request was responded to within 3 seconds; handshake communication is up.

Standby SPE Configuration Matchup Test (#920)

This test requires that handshake be up. It checks to see if the hardware configuration of the standby SPE is in agreement with that of the active SPE, *ignoring tape and disk components.* Active SPE software sends a message to the standby requesting a list of the latter's components. This list is compared to the list of known components on the active SPE.

This match is necessary for memory shadowing to operate correctly, and for the standby SPE to be able to take on active SPE status correctly. Failure indicates that, for some SPE component other than disk or tape, the two SPE configurations disagree. This is a serious problem. Memory shadowing is automatically turned off as long as a configuration mismatch exists. As long as this condition holds, any spontaneous SPE interchange which might occur results in all calls being dropped and a COLD-1 restart on the newly active SPE.

Table 9-339. TEST #920 Standby SPE Configuration Matchup Test

Error Code	Test Result	Description/ Recommendation
1338	ABORT	Test cannot run because a planned SPE interchange is pending. 1. Wait for the planned interchange to complete, then for handshake to come up, then re-run test on newly standby SPE. If no interchange is in progress and error 1338 persists, escalate the problem.
1339	ABORT	Test cannot run because handshake communication is not up. 1. Wait 5 minutes and try test again. If handshake is still not up (you get a 1339), solve the handshake problem as described in "Resolving Handshake Failure" on page S-187. If handshake is up and error 1339 persists, escalate the problem.
2000	ABORT	Communication with Standby SPE timed out. 1. Retry the test once after 2 minutes. 2. If the abort code 2000 is encountered in the repetition, follow normal escalation procedures.

Continued on next page

Table 9-339. TEST #920 Standby SPE Configuration Matchup Test — *Continued*

Error Code	Test Result	Description/ Recommendation
1374	FAIL	Test failed due to mismatch in packet-interface circuit packs. 1. Use **list config control** to verify discrepancy. 2. Fix the indicated discrepancy in packet-interface packs. 3. Re-run test; if failure persists, escalate the problem. This mismatch test is not sensitive to firmware differences between the two packet-interface circuit packs. See the PKT-INT section for dealing with firmware variations.
1375	FAIL	Test failed due to mismatch in memory circuit packs. 1. Use "list config control" to verify discrepancy. 2. Fix the indicated discrepancy in memory packs. 3. Re-run test; if failure persists, escalate the problem.
1376	FAIL	Test failed due to mismatch in either PROCR, SYSAM, DUPINT, or MSSNET circuit packs. 1. Use **list config control** to verify this highly unlikely discrepancy. 2. Fix the indicated discrepancy. 3. Re-run test; if failure persists, escalate the problem.
	PASS	Active and standby SPEs' hardware configurations agree in all critical components.

STO-DATA (Stored Data)

MO Name As It Appears in Alarm Log	Alarm Level	Initial System Technician Command to Run	Full Name of MO
STO-DATA	MINOR	test stored-data [long]*	Stored Data
STO-DATA	WARNING	test stored-data	Stored Data

NOTE:
STO-DATA problems can be caused by faulty MSS hardware or hardware used to provide communication between active and standby SPEs. If hardware errors are present for H-ADAPTER, TAPE, DISK, or DUPINT, investigate those first and then run **test stored-data** to address file inconsistencies.

The Mass Storage System (MSS) consists of the following components which are part of the system's SPE:

- TN1656 Disk circuit pack
- TN1656 Tape circuit pack
- Host Adapter circuit located on the UN332 MSS/Network Control circuit pack

Each disk and tape drive stores 2 copies of each of the following:

- The software that the system runs (the ''boot image'')
- Translation data
- Software update data (also known as program updates or patches)
- Announcement files from the TN750 Announcement circuit pack
- File directory
- Error log
- In special circumstances, a core dump of all system memory (single copy)

The disk is the primary storage device. Files on disk are generally used to reboot the system or to restore files that are lost or corrupted during a malfunction. The tape is used to backup the disk and as a portable medium for data, such as is used for introduction of a new software load.

In High and Critical Reliability systems (duplicated SPE) the tape and disk drives are duplicated as part of the PPN control carrier, resulting in a total of 4 devices, each storing 2 copies of the aforementioned files. Ideally, the files on all of the devices are identical, but malfunctions or even normal operations can lead to inconsistencies.

Data Inconsistencies and STO_DATA Tests

The STO-DATA maintenance object is not a hardware component, but a strategy used to test for consistency between corresponding files on the different storage devices. When inconsistencies are found, STO-DATA errors and alarms are generated. The translation, announcement, and software update files are checked by comparing timestamps created when the files were saved from system memory. The boot image files are checked by comparing vintage numbers. The other files are not checked.

On systems with simplex SPE, a STO-DATA test compares the files on tape to those on the disk. On systems with duplicated SPEs, the following comparisons of corresponding files are made:

1. Disk to tape (active SPE)
2. Disk to tape (standby SPE)
3. Disk (active SPE) to disk (standby SPE)
4. Tape (active SPE) to tape (standby SPE)

The data consistency tests are run as part of the short and long demand test sequences and automatically during daily scheduled maintenance. Test results point to which files, if any, are out of date.

In addition to the data consistency tests, checksum tests are run during the long demand test sequence to verify that the checksums of both copies of the boot image on each storage device are the same. This capability is useful when the system has booted using a boot image other than the first copy on disk. (An alarm and unique error code identify this situation). In addition to test results, you can use the **list configuration software** command to retrieve detailed information about the files on each storage device.

Backing Up Data: MSS Commands

Several commands are available for copying files from system memory to the MSS, and for copying files from one MSS device to another. They are summarized in the following table. Refer to Chapter 8, "Maintenance Commands", ‘‘Maintenance Commands’’ for complete descriptions and additional options for these commands.

Mass Storage System Commands

Command	Execution Time *	Action/Remarks
save translation [disk] *	2 minutes	Copy translation from system memory to disk File is timestamped at time of command.
save announcement	40 minutes	Copy announcement file from TN750 to disk File is timestamped at time of command. Use after recording announcements.
restore announcement	40 minutes	Copy announcement file from disk back to TN750 Use after a TN750 or announcement administration error.
backup disk [incremental]	20-50 minutes	Copy from disk to tape all files on disk that are newer Done to both SPEs if duplicated
backup disk full	50 minutes	Copy all disk files to tape Done to both SPEs if duplicated Use after replacing tape cartridge.
restore disk [full]	50 minutes	Copy all tape files to disk Use after disk is replaced. Done to both SPEs if duplicated.
copy announcement tape	2 minutes	Copy announcement file from disk to tape Keeps timestamps consistent.
copy update-file tape	2 minutes	Copy update file from disk to tape Keeps timestamps consistent.

* Execution times vary; those shown are expected maximums. Entries in brackets ([]) are defaults and need not be entered. Pipes (|) indicate a choice between options.

The following commands are not used in normal backup or maintenance procedures. They are sometimes useful in special situations such as software updates or resolving specific file inconsistencies between devices.

Special Purpose MSS Commands

Command	Execution Time *	Action/Remarks
save translation tape	10 minutes	Copy translation from memory to tape Use only for special situations. Causes STO-DATA tests to fail since tape timestamp is newer than disk.
copy announcement spe-a|spe-b disk	2 minutes	Copy announcement data from tape to disk Useful for restoring announcement file on disk
copy update-file spe-a|spe-b disk	2 minutes	Copy update (patch) data from tape to disk Useful for restoring update data on disk
copy bootimage [spe-a|spe-b|both] tape	2 minutes	Copy boot image from disk to tape Useful for restoring boot image on tape
copy bootimage [spe-a|spe-b|both] disk	2 minutes	Copy boot image from tape to disk Useful for restoring boot image on disk

* Execution times vary; those shown are expected maximums. Entries in brackets ([]) are defaults and need not be entered. Pipes (|) indicate a choice between options.

Automatic Backups

During normal operations, files in system memory, on disk, and on tape can become inconsistent (for example, when translations are changed, when announcements are saved). During daily scheduled maintenance, several actions are take to keep data files consistent:

1. At the start of scheduled maintenance, translations and error logs are saved. This step must be enabled by the ‘‘Save Translation’’ field on the **change system-parameters maintenance** form.
2. Disk files are backed up to tape.
3. STO-DATA tests are run along with other daily maintenance tests.

At the end of this sequence, disk and tape files should all be identical, and translations and error logs files should be current with system memory. Announcement files are not saved automatically, and should be manually saved

after recording or altering announcements. The automatic backup will however transfer these from disk to tape.

File Inconsistencies: Causes

A number of things can cause files to become inconsistent between devices. **Test stored data** and **list configuration software** can be used to identify which files are affected. Described below are some of the causes of inconsistencies.

Save commands

Whenever a **save translation** or **announcements** is executed, the files on disk are newer than the files on tape until a **backup disk** is performed either by command or by daily scheduled maintenance. If **test stored-data** is run before a backup, Tests #833 and #834 will fail with error code 1 or 8, generating a warning alarm against STO-DATA. Once a disk backup is performed, running the stored data tests will clear the alarm. A copy command can be used instead of backup to save time; take extra care to enter the right options so good files are not lost.

When **save translation tape** or **save announcements tape** is executed, timestamps on the tape files will be newer than those on the disk files. (This is the opposite of normal operational sequences.) These commands should not be used as part of standard administration or repair procedures. When the files are in this state, automatic or demand incremental backups from disk will be prevented from overwriting the tape files, and subsequent STO-DATA tests will fail, generating warning alarms.

Save to tape commands may be useful when the disk has failed and the tape is being used temporarily for primary storage. Once the disk is replaced, **restore disk** can be used to recoordinate the files.

Dirty Files

Two copies of each file are stored on each MSS device. This protects against data loss in case a failure occurs while data is being written. If such a failure occurs, or if a tape cartridge is pulled out of the drive while data is being written to it, the incomplete file is marked as a ‘‘dirty’’ file. The system will then use the other copy for reading data and will generate a minor alarm against TAPE or DISK. AS long as one of the copies is clean, STO-DATA tests will test the clean copy and not report any errors.

Tape Replacement

Tape cartridges are periodically replaced (for example, after a TAPE warning alarm with error type 2305, indicating that 90% of its useful life has been exceeded). Until a full disk backup is performed, the new tape will be inconsistent with the disk.

Inconsistent Files: Solutions

In almost all cases, the best way to clear STO-DATA alarms is to perform a **save translation** or **announcements** (if those files are affected), followed by a **backup disk**. Daily scheduled maintenance also performs this sequence. There are unusual situations in which other actions are required.

If problems exist on the TN750 Announcement circuit pack, avoid saving announcements until those problems are resolved. Otherwise, good copies of the files could be overwritten by bad ones.

The default for the backup command is ''incremental,'' meaning that files on tape with newer timestamps than those on disk will not be overwritten. This can occur when a save is made to tape as, for instance, you might wish to do while a disk is out of service. Save followed by backup will still work, but time can be saved by **restore disk**.

Inconsistency across SPEs

When the SPE is duplicated, disruptions to inter-SPE communication, or MSS writes on one SPE but not on the other, can cause files to be inconsistent between devices on the different SPEs. You can detect this situation by running **list configuration software long** and inspecting the timestamps and software version numbers. Correct procedure depends on which device has the correct boot image.

Disk on Active SPE Has Correct Boot Image:

1. **save translation active** (2 min)
2. **backup disk active** (40 min)
3. Put the tape cartridge from the active SPE into the tape drive on the standby SPE. Put the tape cartridge from the standby SPE into the tape drive on the active SPE.
4. **backup disk active** (40 min)
5. **restore disk standby** (40 min)
6. **test stored data**

Tape on Active SPE Has Correct Boot Image:

1. **save translation tape active** (2 min)
2. **restore disk active** (40 min)
3. Put the tape cartridge from the active SPE into the tape drive on the standby SPE. Put the tape cartridge from the standby SPE into the tape drive on the active SPE.
4. **backup disk active** (40 min)
5. **restore disk standby** (40 min)
6. **test stored data**

Hardware Error Log Entries and Test to Clear Values

Table 9-340. STORED-DATA Error Log Entries

Error Type	Aux Data	Associated Test	Alarm Level	On/Off Board	Test to Clear Value
1 (a)	1 to 6	Carrier A Tape-Disk Consistency Test (#833)	WARNING	OFF	test stored-data
257 (b)	1	Carrier A Tape-Disk Consistency Test (#833	WARNING	OFF	test stored-data
513 (a)	1 to 6	Carrier B Tape-Disk Consistency Test (#834)	WARNING	OFF	test stored-data
542 (c)	0	Scheduled translation save	-	-	
543 (d)	0	Scheduled disk backup	-	-	
769 (b)	1	Carrier B Tape-Disk Consistency Test (#834)	WARNING	OFF	test stored-data
1025 (e)	1 to 6	Tape-Tape Consistency Test (#835)	MINOR	OFF	test stored-data
1281 (f)	1	Tape-Tape Consistency Test (#835)	MINOR	OFF	test stored-data
1537 (e)	1 to 6	Disk-Disk Consistency Test (#836)	MINOR	OFF	test stored-data
1793 (f)	1	Disk-Disk Consistency Test (#836)	MINOR	OFF	test stored-data
2049 (g)	1 to 3	Carrier A Boot Image Test (#837) (Runs at system boot time only)	MINOR	OFF	test stored-data long
2305 (g)	1 to 3	Carrier B Boot Image Test (#837) (Runs at system boot time only)	MINOR	OFF	test stored-data long
2561 (h)	30004 30014 30201	Carrier A Tape Checksum Test (#829)	MINOR	OFF	test stored-data long
2817 (h)	30004 30014 30201	Carrier A Disk Checksum Test (#830)	MINOR	OFF	test stored-data long

Continued on next page

Table 9-340. STORED-DATA Error Log Entries — *Continued*

Error Type	Aux Data	Associated Test	Alarm Level	On/Off Board	Test to Clear Value
3073 (h)	30004 30014 30201	Carrier B Tape Checksum Test (#831)	MINOR	OFF	test stored-data long
3329 (h)	30004 30014 30201	Carrier B Disk Checksum Test (#832)	MINOR	OFF	test stored-data long
3585 (i)	Any		WARNING	OFF	test stored-data
3586 (j)	Any		WARNING	OFF	test stored-data
3587 (k)	Any		WARNING	OFF	test stored-data
3841 (i)	Any		WARNING	OFF	test stored-data
3842 (j)	Any		WARNING	OFF	test stored-data
3843 (k)	Any		WARNING	OFF	test stored-data

Notes:

a. Error types 1 and 513 indicate that one or more of the following conditions has occurred on Carrier A or Carrier B respectively: the timestamps of the translation files on the two storage devices are inconsistent, the timestamps of the announcement files on the two storage devices are inconsistent, or the timestamps of the program update files on the two storage devices are inconsistent.

   The auxiliary data for the error type can be used to determine which files are inconsistent. That information is presented in the table below. More than one data inconsistency may exist, but only the fault with the highest auxiliary data number will appear in the error log. Enter the **test stored-data** command to obtain more information about the failure and follow the associated repair procedures.

.

Auxiliary Data for Error Types 1 and 513

Aux Data	Data File Inconsistency
1	Disk translation data is newer than the tape translation data
2	Tape translation data is newer than the disk translation data
3	Disk announcement data is newer than the tape announcement data
4	Tape announcement data is newer than the disk announcement data
5	Disk program update data is newer than the tape program update data
6	Tape program update data is newer than the disk program update data

b. Error types 257 and 769 indicate that the vintages of the boot images on the two storage devices on Carrier A or Carrier B respectively, are inconsistent.

   1. Use the **list configuration software-vintage** command to get the vintage numbers and install the correct vintage.
   2. Run the data storage tests by entering **test stored-data** to retire the alarm.
   3. If the STORED-DATA tests fail, refer to the repair procedures for those tests for further information.

c. Error type 542 indicates that the scheduled daily save-translation operation failed. If a STORED-DATA alarm is active, it is due to a data inconsistency.

   1. Refer to the alarm log and clear any failures associated with the HOST ADAPTER, TAPE, or DUPINT circuit and clear those problems first.
   2. Then save translation manually by entering **save translation** and backup the disk manually by entering **backup disk**. Note: this operation may take up to an hour.
   3. Run the data storage tests by entering **test stored-data** to retire the alarm.
   4. If the STORED-DATA tests fail, refer to the repair procedures for those tests for further information.

d. Error type 543 indicates that the scheduled daily disk backup operation failed. If a STORED-DATA alarm is active, it is due to a data inconsistency.

1. Refer to the alarm log and clear any failures associated with the HOST ADAPTER, DISK, or DUPINT circuit and clear those problems first.
2. Then backup translation manually by entering **backup disk**. Note: this operation may take up to an hour.
3. Run the data storage tests by entering **test stored-data** to retire the alarm.
4. If the STORED-DATA tests fail, refer to the repair procedures for those tests for further information.

e. Error types 1025 and 1537 indicate that one or more of the following conditions has occurred between the tapes or between the disks respectively, in each carrier: the timestamps of the translation files on the two storage devices are inconsistent, the timestamps of the announcement files on the two storage devices are inconsistent, or the timestamps of the program update files on the two storage devices are inconsistent.

This auxiliary data for the error type can be used to determine which files are inconsistent. That information is presented in the table below. More than one data inconsistency may exist, but only the fault with the highest auxiliary data number will appear in the error log. Enter the **test stored-data** command to obtain more information about the failure and follow the associated repair procedures.

Auxiliary Data for Error Types 1025 and 1537

Aux Data	Data File Inconsistency
1	Translation data on the carrier A device is newer than the translation data on the carrier B device
2	Translation data on the carrier B device is newer than the translation data on the carrier A device
3	Announcement data on the carrier A device is newer than the announcement data on the carrier B device
4	Announcement data on the carrier B device is newer than the announcement data on the carrier A device
5	Program update data on the carrier A device is newer than the program update data on the carrier B device
6	Program update data on the carrier B device is newer than the program update data on the carrier A device

f. Error types 1281 and 1793 indicate that the vintages of the boot images on two the storage devices on Carrier A or Carrier B respectively, are inconsistent. Use the **list configuration software-vintage** command to get the vintage numbers and install the correct vintage.

g. Error types 2049 and 2305 indicate that a copy of the boot image other than the primary copy on the primary device on Carrier A or Carrier B, respectively, was used to boot the system. The check of which copy of the boot image was used is made only at boot time. Use the following procedures based on the Auxiliary Data to clear the problem on Carrier A or Carrier B.

Auxiliary Data for Error Types 2049 and 2305

Aux Data	Description / Recommendation
1	The secondary boot image on the disk was used to boot the system. 1. Run **test stored-data long** to verify that the primary copy of the boot image is invalid. 2. Restore the bad copy from the tape by issuing a **restore disk** command. 3. Run **test stored-data long** to retire the alarm.
2	The primary boot image on the tape was used to boot the system. 1. Run **test disk long** for the disk on the SPE carrier which reports the failure. If any tests fail, refer to DISK repair procedures for further action. 2.) Run **test stored-data long** to verify that the primary and secondary copies of the boot image on the disk are invalid. 3. Restore the copies on the primary device from the copies on the secondary device by issuing a **restore disk** command. 4. Run **test stored-data long** to retire the alarm.
3	The secondary boot image on the tape was used to boot the system. 1. Run **test stored-data long** to verify that the primary and secondary copies of the boot image on the disk and the primary copy of the boot image on the tape are all invalid. 2. Insert a backup tape of the correct vintage. 3. Run **save translation tape** to get the latest translation on the backup tape. 4. Run **copy announcement tape** to get the latest announcements on the backup tape. 5. Run **restore disk** to copy the good boot images, translations, announcements and software update files to the disk. 6. Run **test stored-data long** to retire the alarm.

h. Error types 2561, 2817, 3073, and 3329 indicate that the checksum test for the two copies of the boot image on the Carrier A tape, Carrier A disk, Carrier B tape, or Carrier B disk, respectively, are inconsistent. (Auxiliary data 30004 indicates that the device could not be read, auxiliary data 30014 indicates that the file type is invalid, and auxiliary data 30201 indicates the checksum is bad).

i. Error types 3585 and 3841 indicate that a save translation to disk failed on carrier A or B, respectively.

   1. Refer to the alarm log and clear any H-ADAPTR, DISK, TAPE, or DUPINT alarms first.
   2. Enter **save translation**. This operation may take up to an hour.
   3. Run **test stored-data** to retire the alarm.
   4. If the Stored Data tests fail, refer to the repair procedures for those tests.
   5. If the alarm continues to occur, follow normal escalation procedures.

j. Error types 3586 and 3842 indicate that an attempt to restore the disk from tape failed on carrier A or B, respectively.

   1. Refer to the alarm log and clear any H-ADAPTR, DISK, TAPE, or DUPINT alarms first.
   2. Enter **restore disk**. This operation may take up to an hour.
   3. Run **test stored-data** to retire the alarm.
   4. If the Stored Data tests fail, refer to the repair procedures for those tests.
   5. If the alarm continues to occur, follow normal escalation procedures.

k. Error types 3587 and 3843 indicate that an attempt to backup the disk to the tape failed on carrier A or B, respectively.

   1. Refer to the alarm log and clear any H-ADAPTR, DISK, TAPE, or DUPINT alarms first.
   2. Enter **backup disk**. This operation may take up to an hour.
   3. Run **test stored-data** to retire the alarm.
   4. If the Stored Data tests fail, refer to the repair procedures for those tests.
   5. If the alarm continues to occur, follow normal escalation procedures.

System Technician-Demanded Tests

The sequence of tests performed depends on whether the SPE is duplicated.

Always investigate tests in the order presented in the table below when inspecting errors in the system. By clearing error codes associated with the *A Carrier Tape Checksum Test*, for example, you may also clear errors generated from other tests in the testing sequence.

	Short Sequence				Long Sequence			
SPE:	**Simplex**		**Duplex**		**Simplex**		**Duplex**	
MSS (D:disk/tape, T:tape only0	**D**	**T**	**D**	**T**	**D**	**T**	**D**	**T**
A Carrier Tape Checksum Test (#829)					X	X	X	X
B Carrier Tape Checksum Test (#830)							X	X
A Carrier Disk Checksum Test (#831)					X		X	
B Carrier Disk Checksum Test (#832)							X	
A Carrier Tape to Disk Consistency Test (#833)	X		X		X		X	
B Carrier Tape to Disk Consistency Test (#834)			X		X		X	
A to B Carrier Tape Consistency Test (#835)			X	X			X	X
A to B Carrier Disk Consistency Test (#836)			X				X	

The A/B Carrier Boot Image Test (#837) runs only at system boot time.

A Carrier and B Carrier Tape Checksum Tests (#829/#830)

A checksum is done on the primary copy of the boot image on the tape and also on the secondary copy of the boot image on the tape. A comparison is made to verify that these two checksums are the same. This test is run as part of the **test stored-data long** demand test.

Table 9-341. TESTS #829 and #830 Tape Checksum Tests

Error Code	Test Result	Description/ Recommendation
1303	ABORT	Could not run the test—internal MSS error 1. Retry the command 2. If the test continues to abort, escalate the problem.
1304	ABORT	Could not allocate the Mass Storage System to run this test 1. Retry the command at 1 minute intervals for a maximum of 5 retries. 2. If the test continues to abort, verify that the daily translation-save operation is not in progress (Use the **display system-parameters maintenance** command to display the start time for scheduled maintenance and the "y/n" option for saving translation daily). If this is not the case, escalate the problem.
1338	ABORT	Could not run the test on the Standby SPE—Interchange pending. 1. Refer to the documentation for STBY-SPE maintenance. 2. After interchange occurs, run test on new active SPE. 3. If the test continues to abort, escalate the problem.

Continued on next page

Table 9-341. TESTS #829 and #830 Tape Checksum Tests — *Continued*

Error Code	Test Result	Description/ Recommendation
1339	ABORT	Could not run the test on the Standby SPE—Handshake down. 1. Refer to the documentation for STBY-SPE maintenance. 2. When the standby SPE is restored to service (use **status spe** to determine state of standby SPE) retry the command. 3. If the test continues to abort, escalate the problem.
1347	ABORT	Could not run the test on the Standby SPE—Refresh not complete. 1. When the standby SPE is restored to service (use **status spe** to determine state of standby SPE) retry the command. 2. If the test continues to abort, escalate the problem.
1350	ABORT	Could not run the test on the Standby SPE—Shadowing not enabled. 1. When the standby is restored to service (use **status spe** to determine state of standby) retry the command. 2. If the test continues to abort, escalate the problem.
2000	ABORT	Response to the test request was not received within the allowable time period. 1. Retry the command at 1 minute intervals for a maximum of 5 retries. 2. If the test continues to abort, escalate the problem.
2500	ABORT	Could not run the test on the Standby SPE—Internal software error. 1. Retry the command at 1 minute intervals for a maximum of 5 retries. 2. If the test continues to abort, escalate the problem.

Continued on next page

Table 9-341. TESTS #829 and #830 Tape Checksum Tests — *Continued*

Error Code	Test Result	Description/ Recommendation
30004	FAIL	The tape could not be read. 1. Verify a tape cartridge is in the tape drive. 2. Retry the command at 1 minute intervals for a maximum of 5 retries. 3. If the test continues to fail, escalate the problem.
30014	FAIL	An invalid file system was found. 1. Verify the correct tape cartridge is in the tape drive. 2. If so, escalate the problem. 3. Otherwise, insert the correct tape cartridge and re-run **test stored-data long**. 4. If the test continues to fail, escalate the problem.
30201	FAIL	The checksums of the boot images for the tape are inconsistent. 1. If a tape-only system, replace the tape. Follow the procedures presented in the Section **XXX** of this manual. 2. If a disk/tape system, run **backup disk full** on the carrier containing the bad tape (this could take up to an hour to complete). 3. Run **test stored-data long** to resolve the alarms. 4. If the test continues to fail, escalate the problem.
	PASS	The checksums are consistent between the two boot images on the tape. 1. If other mss errors are present, refer to the maintenance information for the HOST ADAPTER, TAPE, and DISK maintenance objects to clear those errors.

A and B Carrier Disk Checksum Tests (#831/#832)

A checksum is done on the primary copy of the boot image on the disk and also on the secondary copy of the boot image on the disk. A comparison is made to verify that these two checksums are the same. This test is run as part of the **test stored-data long** demand test.

Table 9-342. TESTS #831 and #832 Disk Checksum Tests

Error Code	Test Result	Description/ Recommendation
1303	ABORT	Could not run the test—internal MSS error 1. If the test continues to abort, escalate the problem.
1304	ABORT	Could not allocate the Mass Storage System to run this test 1. Retry the command at 1 minute intervals for a maximum of 5 retries. 2. If the test continues to abort, verify that the daily translation-save operation is not in progress (issue the **display system-parameters maintenance** command to display the time for scheduled maintenance and the "y/n" option for saving translation daily). If this is not the case, escalate the problem.
1338	ABORT	Could not run the test on the Standby SPE—Interchange pending. 1. Refer to the documentation for STBY-SPE maintenance. 2. After interchange occurs, run test on new active SPE. 3. If the test continues to abort, escalate the problem.
1339	ABORT	Could not run the test on the Standby SPE—Handshake down. 1. Refer to the documentation for STBY-SPE maintenance. 2. When the standby is restored to service (use **status spe** to determine state of standby) retry the command. 3. If the test continues to abort, escalate the problem.

Continued on next page

Table 9-342. TESTS #831 and #832 Disk Checksum Tests — *Continued*

Error Code	Test Result	Description/ Recommendation
1347	ABORT	Could not run the test on the Standby SPE—Refresh not complete. 1. When the standby is restored to service (use **status spe** to determine state of standby) retry the command. 2. If the test continues to abort, escalate the problem.
1350	ABORT	Could not run the test on the Standby SPE—Shadowing not enabled. 1. When the standby is restored to service (use **status spe** to determine state of standby) retry the command. 2. If the test continues to abort, escalate the problem.
2000	ABORT	Response to the test request was not received within the allowable time period. 1. Retry the command at 1 minute intervals for a maximum of 5 retries. 2. If the test continues to abort, escalate the problem.
2500	ABORT	Could not run the test on the Standby SPE—Internal software error. 1. Retry the command at 1 minute intervals for a maximum of 5 retries. 2. If the test continues to abort, escalate the problem.

Continued on next page

Table 9-342. TESTS #831 and #832 Disk Checksum Tests — *Continued*

Error Code	Test Result	Description/ Recommendation
30201	FAIL	The checksums of the boot images for the disk were inconsistent. 1. Run **restore disk full** on the carrier containing the bad disk (this could take up to an hour to complete). 2. Run **test stored-data long** to resolve the alarms. 3. If the test continues to fail, escalate the problem.
	PASS	The checksums are consistent between the two boot images on the disk. 1. If other mss errors are present, refer to the maintenance information for the HOST ADAPTER, TAPE, and DISK maintenance objects to clear those errors.

Test #833 (A Carrier) and #834 (B Carrier) Tape to Disk Consistency Tests

There are two copies of the boot image, translation data, announcement data, and program update date on each storage device. In each of the checks performed by these tests, the system chooses one copy of each that it deems "best." These tests then perform four checks. First, the vintage of one of the boot images on tape is compared to the vintage of one of the boot images on disk. The test verifies that the two chosen copies are consistent. Second, the time stamp of one of the copies of the translation file on the tape is compared to the time stamp of one of the translation files on the disk. If the files are inconsistent, the test reports which one is newer. Next, the time stamp of one of the copies of the announcements file on the tape is compared to the time stamp of one of the announcements files on the disk. Finally, the time stamp of one of the copies of the program update file on the tape is compared to the time stamp of one of the program update files on the disk. If the files are inconsistent, the test again reports which one is newer.

This test is run as part of the **test stored-data** demand test and during daily scheduled maintenance. The following table is used in diagnosing fail results.

TESTS #833 and #834 Failure Numbers

Failure Number	File Inconsistency
1	The translation file on the disk is newer than the translation file on the tape.
2	The translation file on the tape is newer than the translation file on the disk.
4	The vintages of the boot images on the tape and disk are inconsistent.
8	The announcement file on the disk is newer than the announcement file on the tape.
16	The announcement file on the tape is newer than the announcement file on the disk.
32	The program update file on the disk is newer than the program update file on the tape.
64	The program update file on the tape is newer than the program update file on the disk.

Table 9-343. TESTS #833 (A Carrier) and #834 (B Carrier) Tape to Disk Consistency Tests

Error Code	Test Result	Description/ Recommendation
1304	ABORT	Could not allocate the Mass Storage System to run this test 1. Retry the command at 1 minute intervals for a maximum of 5 retries. 2. If the test continues to abort, verify that the daily translation-save operation is not in progress (issue the **display system-parameters maintenance** command to display the time for scheduled maintenance and the "y/n" option for saving translation daily). If this is not the case, escalate the problem.
1333	ABORT	Could not run the test—internal MSS error 1. If the test continues to abort, escalate the problem.
1338	ABORT	Could not run the test on the Standby SPE—Interchange pending. 1. Refer to the documentation for STBY-SPE maintenance. 2. After interchange occurs, run test on new active SPE. 3. If the test continues to abort, escalate the problem.
1339	ABORT	Could not run the test on the Standby SPE—Handshake down. 1. Refer to the documentation for STBY-SPE maintenance. 2. When the standby is restored to service (use **status spe** to determine state of standby) retry the command. 3. If the test continues to abort, escalate the problem.

Continued on next page

Table 9-343. TESTS #833 (A Carrier) and #834 (B Carrier) Tape to Disk Consistency Tests — *Continued*

Error Code	Test Result	Description/ Recommendation
1347	ABORT	Could not run the test on the Standby SPE—Refresh not complete. 1. When the standby is restored to service (use **status spe** to determine state of standby) retry the command. 2. If the test continues to abort, escalate the problem.
1350	ABORT	Could not run the test on the Standby SPE—Shadowing not enabled. 1. When the standby is restored to service (use **status spe** to determine state of standby) retry the command. 2. If the test continues to abort, escalate the problem.
2000	ABORT	Response to the test request was not received within the allowable time period. 1. Retry the command at 1 minute intervals for a maximum of 5 retries. 2. If the test continues to abort, escalate the problem.
2500	ABORT	Could not run the test on the Standby SPE—Internal software error. 1. Retry the command at 1 minute intervals for a maximum of 5 retries. 2. If the test continues to abort, escalate the problem.

Continued on next page

Table 9-343. TESTS #833 (A Carrier) and #834 (B Carrier) Tape to Disk Consistency Tests — *Continued*

Error Code	Test Result	Description/ Recommendation
Any	FAIL	One or more of the 4 files checked was inconsistent with the file on the other device. 1. Enter **list configuration software** to determine the inconsistent file. If a file on tape is the older file, use **backup disk** to copy the disk file to the tape. If a file on disk is older file, use **restore disk** to copy the tape file to the disk. 2. If for some reason the **list configuration software** command does not provide the necessary data: a. Convert the error code to a set of failure numbers. The error code returned by the test is the sum of one or more failure numbers listed in the table at the beginning of this test description, *Tests 833 and 834 Failure Numbers*. Using that table, subtract the largest failure number possible (so as to leave a positive remainder) from the error code and note the associated inconsistency from the table. Continue subtracting failure numbers from the remainder until the remainder is 0. The numbers subtracted represent the inconsistencies found. b. Use the results of the four consistency tests (#833, #834, #835 and #836) to determine the device with the incorrect files. If the files on the tape are newer than the files on the disk, restore the disk from the tape (**restore disk**). If the files on the disk are newer than the files on the tape, backup the tape from its disk (**backup disk**).
	PASS	The files are consistent between the disk and the tape. 1. If other MSS errors are present, refer to the H-ADAPTR, TAPE, and DISK sections.

Tape to Tape and Disk to Disk Consistency Tests (#835/#836)

There are two copies of the boot image, translation data, announcement data and program update data on each storage device. In each of the checks performed by these tests, the system chooses one copy of each that it deems "best." These tests then perform four checks. First, the vintage of one boot image on the Carrier A device is compared to the vintage of one boot image on the Carrier B device. The test verifies that the two chosen copies are consistent. Second, the time stamp of one copy of the translation file on the Carrier A device is compared to the time stamp of one copy of the translation file on the Carrier B device. If the files are inconsistent, the test reports which one is newer. Next, the time stamp of one copy of the announcement file on the Carrier A device is compared to the time stamp of one copy of the announcement file on the Carrier B device. Finally, the time stamp of one copy of the program update file on the Carrier A device is compared to the time stamp of one copy of the program update files on the Carrier B device. If the files are inconsistent, the test again reports which one is newer.

This test is run as part of the **test stored-data** demand test and during daily scheduled maintenance. The following table is used in diagnosing fail results.

Table 9-344. TEST #835 and #836 Failure Numbers

Failure Number	File Inconsistency
1	The translation file on the Carrier A device is newer than the translation file on the Carrier B device.
2	The translation file on the Carrier B device is newer than the translation file on the Carrier A device.
4	The vintages of the boot images on the two devices are inconsistent.
8	The announcement file on the Carrier A device is newer than the announcement file on the Carrier B device.
16	The announcement file on the Carrier B device is newer than the announcement file on the Carrier A device.
32	The program update file on the Carrier A device is newer than the program update file on the Carrier B device.
64	The program update file on the Carrier B device is newer than the program update file on the Carrier A device.

Table 9-345. TESTS #835 and #836 Tape to Tape and Disk to Disk Consistency Tests

Error Code	Test Result	Description/ Recommendation
1304	ABORT	Could not allocate the Mass Storage System to run this test 1. Retry the command at 1 minute intervals for a maximum of 5 retries. 2. If the test continues to abort, verify that the daily translation-save operation is not in progress (issue the **display system-parameters maintenance** command to display the time for scheduled maintenance and the "y/n" option for saving translation daily). If this is not the case, escalate the problem.
1333	ABORT	Could not run the test—internal MSS error 1. If the test continues to abort, escalate the problem.
1338	ABORT	Could not run the test on the Standby SPE—Interchange pending. 1. Refer to the documentation for STBY-SPE maintenance. 2. After interchange occurs, run test on new active SPE. 3. If the test continues to abort, escalate the problem.
1339	ABORT	Could not run the test on the Standby SPE—Handshake down. 1. Refer to the documentation for STBY-SPE maintenance. 2. When the standby is restored to service (use **status spe** to determine state of standby) retry the command. 3. If the test continues to abort, escalate the problem.

Continued on next page

Table 9-345. TESTS #835 and #836 Tape to Tape and Disk to Disk Consistency Tests — *Continued*

Error Code	Test Result	Description/ Recommendation
1347	ABORT	Could not run the test on the Standby SPE—Refresh not complete. 1. When the standby is restored to service (use **status spe** to determine state of standby) retry the command. 2. If the test continues to abort, escalate the problem.
1350	ABORT	Could not run the test on the Standby SPE—Shadowing not enabled. 1. Retry the command at 1 minute intervals for a maximum of 5 retries. 2. If the test continues to abort, escalate the problem.
2000	ABORT	Response to the test request was not received within the allowable time period. 1. Retry the command at 1 minute intervals for a maximum of 5 retries. 2. If the test continues to abort, escalate the problem.
2500	ABORT	Could not run the test on the Standby SPE—Internal software error. 1. Retry the command at 1 minute intervals for a maximum of 5 retries. 2. If the test continues to abort, escalate the problem.

Continued on next page

Table 9-345. TESTS #835 and #836 Tape to Tape and Disk to Disk Consistency Tests — *Continued*

Error Code	Test Result	Description/ Recommendation
Any	FAIL	One or more of the 4 files checked was inconsistent with the file on the other device. 1. Enter **list configuration software** to determine the inconsistent file. If a file on tape is the older file, use **backup disk** to copy the disk file to the tape. If a file on disk is older file, use **restore disk** to copy the tape file to the disk. 2. If for some reason the **list configuration software** command does not provide the necessary data: a. Convert the error code to a set of failure numbers. The error code returned by the test is the sum of one or more failure numbers listed in Table 9-344 on page S-232, “TEST #835 and #836 Failure Numbers.” Using that table, subtract the largest failure number possible (so as to leave a positive remainder) from the error code and note the associated inconsistency from the table. Continue subtracting failure numbers from the remainder until the remainder is 0. The numbers subtracted represent the inconsistencies found. b. Use the results of the four consistency tests (#833, #834, #835 and #836) to determine the device with the incorrect files. If the files on the tape are newer than the files on the disk, restore the disk from the tape (**restore disk**). If the files on the disk are newer than the files on the tape, backup the tape from its disk (**backup disk**).
	PASS	The files are consistent between the compared devices. 1. If other MSS errors are present, refer to the H-ADAPTR, TAPE, and DISK sections.

STRAT-3 (Stratum 3 Clock)

MO Name As It Appears in Alarm Log	Alarm Level	Initial System Technician Command to Run	Full Name of MO
STRAT-3	MAJOR	test synchronization	Stratum 3 Clock
STRAT-3	MINOR	test synchronization	Stratum 3 Clock

The *Digital Synchronization Network Plan (PUB 60110)* specifies a hierarchy of synchronization nodes consisting of strata 1 to 4, where the sole Stratum 1 clock in the network is the most accurate. The G3r system supports both Stratum 3 and Stratum 4 operations. Refer to SYNC (Synchronization) Maintenance documentation for details on Stratum 4 operation.

A Stratum 3 clock derives its timing from two DS1 references that are connected to a Stratum 3 or better (i.e., lower stratum) source. The Stratum 3 clock provides a holdover of at least 24 hours should both DS1 references fail. (After 24 hours, the Stratum 3 clock still provides service but its accuracy may be degraded). The *Digital Synchronization Network Plan (PUB 60110)* requires that the Stratum 3 clock have duplicated components.

The Stratum 3 clock can be configured with only one DS1 input if one of the Clock Input cards is removed. Also, the Stratum 3 clock can free run, i.e., use its internal clock without using DS1 inputs, if both Clock Input cards are removed.

The recognition of the Stratum 3 clock itself as well as its alarm signals, is supported only by the TN780 Tone-Clock circuit pack. The TN780 Tone-Clock circuit pack is also backwards-compatible with the TN768 Tone-Clock circuit pack.

The Stratum 3 clock may be connected to the PPN if the TN780 Tone-Clock circuit pack(s) is present in that port network. The Stratum 3 clock should never be connected to an EPN.

The only operation that software can perform is a query of the alarm leads. The only recovery action that can be performed on a catastrophic failure of the Stratum 3 clock is the utilization of the local oscillator on the Active TN780 Tone-Clock circuit pack. Neither software nor the TN780 Tone-Clock circuit pack can request additional information about the health of the Stratum 3 clock other than the information provided by the alarm leads. Furthermore, neither the software nor the TN780 Tone-Clock circuit pack can request that the external clock switch references, change configuration, disable/enable, initialize, etc.

In the system, the Stratum 3 clock has been implemented as an external which follows the specification in PUB 60110 for Stratum 3. The only external Stratum 3 clock that is supported is the Telecom Solutions Digital Clock Distributor™ for Customer Premise Timing (DCD-CPT) Stratum 3 clock. Figure 9-102 on page

S-238 shows how the Stratum 3 hardware configuration provides clock and alarm signals to the TN780 Tone-Clock circuit pack(s). The reference DS1 facilities are connected directly to the Stratum 3 clock for timing purposes, but the DS1 data may be routed into the switch by using a Y connector (H-600-274 G1 for the 50 pin DS1 end or H-600-274 G2 for the 15 pin DS1 end).

For more information on the installation of the Stratum 3 clock, see the *DEFINITY Communications System Generic 1 and Generic 3 Installation and Test,* 555-230-104.

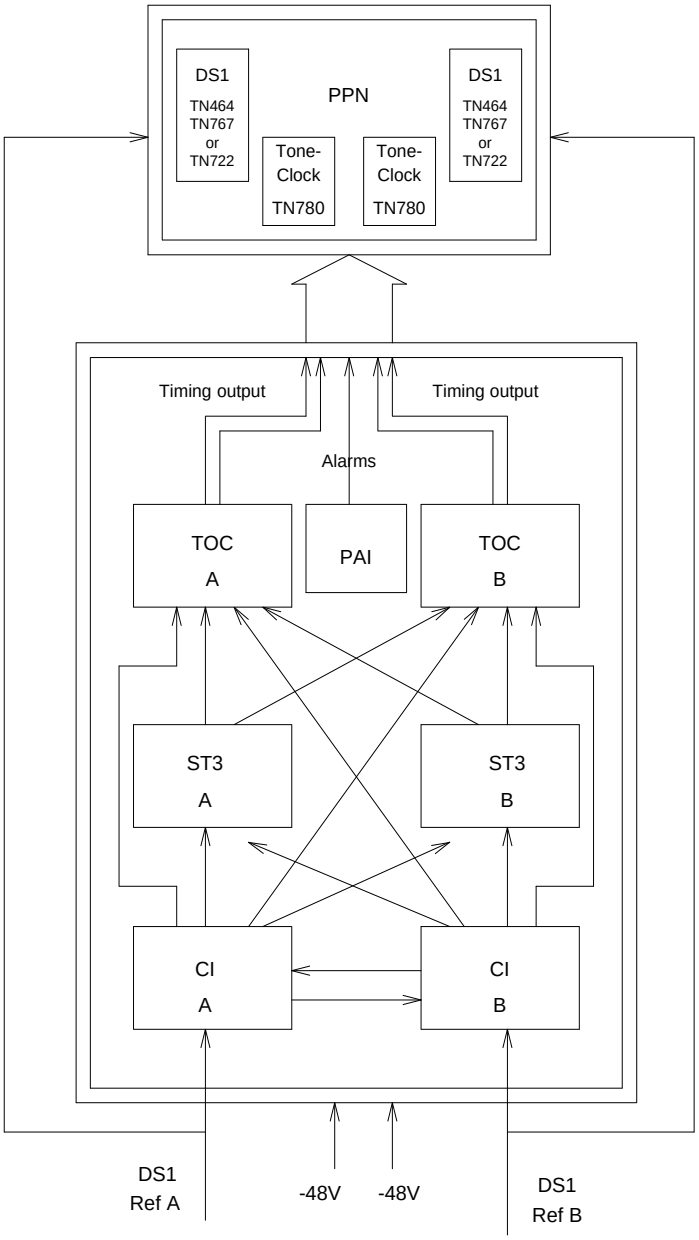

Figure 9-102. Stratum 3 Clock Hardware Configuration

Stratum 3 Clock LED Strategy

NOTE:
When looking in the Stratum 3 cabinet, ‘‘A’’ card is on the left and ‘‘B’’ card is on the right.

NOTE:
The normal LED scheme is not followed for this device. Green LEDs do not indicate maintenance activity. There are no yellow LEDs, and there are more than three LEDs per circuit pack.

NOTE:
Removal of a card in the Stratum 3 clock may cause alarm(s) to be resolved and the query test to pass. However, the removed cards should still be replaced to restore the Stratum 3 clock to full service.

The Stratum 3 clock has the following components:

- 2 Clock Input cards (CI)

  Provides the logic to select the better DS1 reference or Clock Input card. The red FAIL LED on this card indicates a failure with the card or the DS1 reference connected to it.

- 2 Stratum 3 Cards (ST3)

  Provides 24-hour holdover. The red FAIL LED on this card indicates a failure with the card. Replace the card.

- 2 Timing Output Cards (TOC)

  Provides cable length compensation, multiple output ports, selection of the ST3, and CI outputs. This type of card has two red failure LEDs: one indicates a failure of the card; the other indicates a failure in one or more output ports. In either case, replace the card.

- 1 PBX (Private Branch Exchange) Alarm Interface (PAI)

  Filters power supplied to the clock, provides fuse protection, and provides alarm indications based on inputs supplied by other cards. The six LEDs on this card provide indications for the six alarm or status conditions as follows:

  — Loss of DS1 reference A

  — Loss of DS1 reference B

  — Loss of one clock unit

  — Loss of both clock units

  — Loss of one power supply

  — Loss of both power supplies

The output of the CI and PAI cards go directly to the TN780 Tone-Clock circuit pack via two 25-pair amphenol-terminated cables. All of the cards have red and/or green LEDs for providing status or alarm indications. The abbreviations used in the table are defined above except for SRC (source) and PLL (Phase Locked Loop).

Stratum 3 Clock LED Indications

Card	Name	Color	Indication
PAI	REF A	Red	Loss of input reference A or CI A failed
	REF B	Red	Loss of input reference B or CI A failed
	ST A	Red	Failed Stratum 3 clock A
	ST B	Red	Failed Stratum 3 clock B
	PWR A	Green	-48VDC A present
	PWR B	Green	-48VDC B present
CI	FAIL	Red	Card failure
	DS1	Green	DS1 source present
	CC	Green	Composite clock source* present
	SRC ACTIVE	Green	Card is currently on-line
ST3	FAIL	Red	Card failure
	LOCK	Red	PLL lost sync with reference or holdover mode
	REF A	Red	Timing Reference from CI A
	REF B	Red	Timing Reference from CI B
TOC	FAIL	Red	Card failure
	PORT ALM	Red	Output port alarm (one or more)
	ST	Green	Reference present from ST clock
	INPUT	Green	Reference present from CI
	500’	Green	500 feet phase advance
	1000’	Green	1000 feet phase advance

* Composite Clock (CC) source refers to the protocol used to electrically transfer timing from the Stratum 3 clock to the switch. The Composite Clock source is not relevant to the system.

Hardware Error Log Entries and Test to Clear Values

Stratum 3 Clock Error Log Entries

Error Type	Aux Data	Associated Test	Alarm Level	On/Off Board	Test to Clear Value
0*	0	Any	Any	Any	test synchronization r 4
1(a)	Any	Stratum 3 Clock Alarm Query (#649	MINOR	OFF	test synchronization r 4
18(b)	0	disable sync	WARNING	OFF	enable sync
257(c)	Any	Stratum 3 Clock Alarm Query (#649)	MINOR	OFF	test synchronization r 4
513(d)	Any	Stratum 3 Clock Alarm Query (#649	MINOR	ON	test synchronization r 4
769(e)	Any	Stratum 3 Clock Alarm Query (#649)	MINOR	ON	test synchronization r 4
1025(f)	Any	Stratum 3 Clock Alarm Query (#649)	MINOR/ MAJOR(h)	ON	test synchronization r 4
1281(g)	Any	Stratum 3 Clock Alarm Query (#649)	MINOR /MAJOR(h)	ON	test synchronization r 4
1537(i)		none	MINOR/ MAJOR(h)	ON	
1793(j)		none	MINOR/ MAJOR(h)	ON	

* Run the Short Test Sequence first. If all tests pass, run the Long Test Sequence. Refer to the appropriate test description and follow the recommended procedures.

Notes:

a. This error type corresponds to FAIL code 1 of the Stratum 3 Clock Alarm Query (test #649): either reference A failed or the CI card A failed.

b. This error indicates that Synchronization Maintenance has been disabled via the **disable synchronization-switch** command. Execute the **enable synchronization-switch** command to enable Synchronization Maintenance reference switching and to resolve this alarm.

c. This error type corresponds to FAIL code 2 of the Stratum 3 Clock Alarm Query (test #649): one power supply failed.

d. This error type corresponds to FAIL code 4 of the Stratum 3 Clock Alarm Query (test #649): one clock unit failed.

e. This error type corresponds to FAIL code 8 of the Stratum 3 Clock Alarm Query (test #649): either reference B failed or the CI card B failed.

f. This error type corresponds to FAIL code 16 of the Stratum 3 Clock Alarm Query (test #649): all power supplies failed.

g. This error type corresponds to FAIL code 32 of the Stratum 3 Clock Alarm Query (test #649): all clock unit(s) failed.

h. An OFF-BOARD alarm on the Stratum 3 clock, indicates a DS1 facility problem; an ON-BOARD alarm indicates a fault in either the Stratum 3 clock or the connection between the Stratum 3 clock and the switch. If the Stratum 3 clock cannot be referenced and the local oscillator on the TN780 Tone-Clock circuit pack must serve as the reference, a Major alarm is raised. Otherwise, a Minor alarm is raised.

i. This error can be caused by one of the following conditions:

   - One or both TOCs (Timing Output Cards) has failed.
   - The connection between the Stratum 3 clock and the TN780 Tone-Clock circuit pack is faulty.
   - The TN780 Tone-Clock circuit pack is defective.

   A Minor alarm results if the Stratum 3 clock can still provide timing to the switch; otherwise, a Major alarm will be raised because the Stratum 3 clock is not providing timing and the switch is referencing the local oscillator on the TN780 Tone-Clock circuit pack. If only the Active TN780 Tone-Clock circuit pack is faulty, the Standby TN780 Tone-Clock circuit pack becomes active and remains synchronized to the Stratum 3 clock. When the system switches to the Standby Tone-Clock circuit pack, the alarm is resolved, and a TDM-CLK alarm is raised to indicate a possible problem on the TN780 Tone-Clock.

   If the alarm is minor:

Look for a red LED on either or both TOC cards. If there is a red LED, then replace the card. If there is no red LED, then, using the *Stratum 3 Wiring Guide*, check that the wiring installation is correct. After replacing the card or correctly rewiring the installation, clear the alarm by first issuing the **disable synchronization-switch** command followed by the **enable synchronization-switch** command. The latter procedure will cause synchronization software to switch back to using the Stratum 3 clock again. Wait 2 minutes and then execute the **status synchronization** command. If Maintenance Name on the status screen shows ‘‘STRAT-3,’’ then the problem is resolved. If not, then escalate the problem.

CAUTION:
*The **disable synchronization-switch** command followed by the **enable synchronization-switch** command may cause slip alarms. The circuit packs that can experience slips and the associated error log entry for slips are as follows.*

Table 9-346. Timing Slip Error Types

Circuit Pack Name	Error Log Name	Error Log Entry for Slips
DS1 Interface	DS1-BD	3073 to 3160
Expansion Interface	EXP-INTF	2305
Switch Node Interface	SNI-BD	1537
Tone-Clock	TDM-CLK	1025
UDS1 Interface	UDS1-BD	3073 to 3160

If the alarm is major:

Check connections between the Stratum 3 clock and the switch. If there are no loose connections, then, using the *Stratum 3 Wiring Guide*, check that the wiring installation is correct. After reconnecting the loose connection or correctly rewiring it, clear the alarm by first issuing the **disable synchronization-switch** command followed by the **enable synchronization-switch** command. Wait 1 minute, and then execute the **status synchronization** command. If Maintenance Name on the status screen shows ‘‘STRAT-3,’’ then the problem is resolved. If not, then escalate the problem.

If the Standby Tone-Clock circuit pack became active:

Check the connection between the Stratum 3 clock and the TN780 Tone-Clock circuit pack from which the system has just switched. If there are no loose connections, then, replace the TN780 Tone-Clock circuit pack. Refer to the ‘‘How to Replace the Tone-Clock circuit pack’’ section in the TDM-CLK (TDM Bus Clock) Maintenance documentation. Before switching back to the new TN780 Tone-Clock circuit pack, use the **test tone-clock UC long** command to check that the Tone-Clock is receiving a signal from the Stratum 3 clock. If all tests pass, switch to the new Tone-Clock circuit pack via the **set tone-clock UC override** command. If Test #651 fails, then the original TN780 Tone-Clock should be reinserted, and the cable between the Stratum 3 clock and the TN780 Tone-Clock circuit pack should be replaced. If Test #651 continues to fail, then escalate the problem.

For all of the above cases if slip alarms exist after following the repair procedures, clear the slip alarms by running the **test board** command with the **clear** option. SeeTable 9-346 for a list of circuit packs and associated slip error log entries.

This error indicates that the Tone-Clock circuit pack in the master port network is not a TN780. If duplicate Tone-Clock circuit packs exist in the master port network, this error may mean that one or both Tone-Clock circuit packs are not TN780s. Verify that the Tone-Clock(s) in the master port network are TN780s.

System Technician-Demanded Tests: Descriptions and Error Codes

Always investigate tests in the order presented in the following table when inspecting errors in the system. By clearing error codes associated with the *Stratum 3 Clock Alarm Query Test,* for example, you may also clear errors generated from other tests in the testing sequence.

The **test synchronization** commands also runs the Test Synchronization test (test #417). Test 417 is described in the SYNC section.

Order of Investigation	ShortTest Sequence	LongTest Sequence	D/ND*
Stratum 3 Clock Alarm Query (#649)	X	X	ND

* D = Destructive; ND = Nondestructive

Stratum 3 Clock Alarm Query (#649)

This test queries the Stratum 3 clock for its alarm status and reports the results of the query. The Stratum 3 clock provides the system with the following six alarm indications via the TN780 Tone-Clock circuit pack:

- Reference A failed or CI card A failed.
- Reference B failed or CI card B failed.
- One power supply failed.
- All power supplies failed.
- One clock unit failed.
- All clock unit(s) failed.

CAUTION:
The removal of a card in the Stratum 3 clock may cause alarm(s) to be resolved and the query test to pass. However, the removed cards should still be replaced to restore the Stratum 3 clock to full service.

Table 9-347. TEST #161 Loop Around Test

Error Code	Test Result	Description/ Recommendation
1001	ABORT	The system could not allocate the necessary resources to run this test. 1. Retry the command at 1-minute intervals up to a maximum of 3 times. 2. If the test continues to abort, follow normal escalation procedures.
1005	ABORT	This test aborts when it is run on a Stratum 4 system. Do not change synchronization to Stratum 3 without consulting the synchronization plan administrator for this switch.
2500	ABORT	Internal System Error 1. Retry the command at 1 minute intervals a maximum of 3 times. 2. If the test continues to abort, follow normal escalation procedures.

Continued on next page

Table 9-347. TEST #161 Loop Around Test — *Continued*

Error Code	Test Result	Description/ Recommendation
1	FAIL	Either Reference A failed or CI card A failed. This condition usually indicates a failure of the DS1 reference; however, there may also be a failure of the CI card to which the reference is connected. The system technician dispatched to investigate this problem should take a spare CI card in case the CI card caused the failure. If you are NOT ON-SITE, use the following procedure: 1. Look for DS1-BD (DS1 Interface Circuit Pack) errors using the **display error** command. Refer to the DS1-BD Maintenance documentation for recommended strategy to resolve any DS1-BD errors found. 2. If there are no DS1-BD errors OR after resolving all DS1-BD errors, issue the **test synchronization r 4** command to determine if the alarm is still present. If all repetitions of the tests pass, then the alarm no longer exists. Otherwise, the system technician should be dispatched with a spare CI card to use the following instructions on-site. (*continued*)

Continued on next page

Table 9-347. TEST #161 Loop Around Test — *Continued*

Error Code	Test Result	Description/ Recommendation
1	FAIL	(*continued*) If you are ON-SITE, use the following procedure: 1. Look for a red LED on CI card A (i.e., the left CI card). If there is a red LED, then replace the CI card, if a spare is available. If no spare CI is available on-site, proceed to Step 3. If after replacing the CI card, the red LED on the new CI card lights also, then proceed to Step 3. 2. If a spare CI card is available, replace the suspect CI card. Otherwise, issue the **test synchronization r 4** command to clear the alarm. If any test repetitions fail, then follow the procedure for those failures. 3. Look for DS1-BD (DS1 Interface Circuit Pack) errors using the **display error** command. Refer to the DS1-BD Maintenance documentation for recommended strategy to resolve any DS1-BD errors found. If there are no DS1-BD errors, then proceed to Step 5. 4. After all DS1-BD errors have been resolved, then determine if the alarm still exists by issuing the **test synchronization r 4** command to clear the alarm. If any test repetitions fail, then follow the procedure for those failures. 5. Check the DS1 reference A connections to the Stratum 3 clock. 6. Determine if the alarm still exists by issuing the **test synchronization r 4** command to clear the alarm. If any test repetitions fail, then follow the procedure for those failures. If the problem persists after you have performed this procedure three times, then follow normal escalation procedures.

Continued on next page

Table 9-347. TEST #161 Loop Around Test — *Continued*

Error Code	Test Result	Description/ Recommendation
2	FAIL	One power supply failed. This error only occurs when the Stratum 3 clock has two power supplies, and one of them has failed. However, the clock can function with one power supply. 1. Locate the failed power supply by looking for a power supply with a red LED and replace it. The power supply is located under the Stratum 3 clock carrier. 2. Determine if the alarm still exists by issuing the **test synchronization r 4** command to clear the alarm. If any test repetitions fail, then follow the procedures for those test failures. If the problem persists after you have performed this procedure three times, then follow normal escalation procedures.
4	FAIL	One clock unit failed. 1. Look at the Stratum 3 cabinet for a red LED on a circuit card marked ‘‘ST3.’’ Replace the card. 2. Determine if the alarm still exists by issuing the **test synchronization r 4** to clear the alarm. If any test repetitions fail, then follow the procedures for those failures. If the problem persists after you have performed this procedure three times, then follow normal escalation procedures.
8	FAIL	Reference B failed or CI card B failed. This condition usually indicates a failure of the DS1 reference; however, there may also be a failure of the CI card to which the reference is connected. The system technician dispatched to investigate this problem should take a spare CI card in case the CI card caused the failure. If you are NOT ON-SITE, use the following procedure: 1. If there were no DS1-BD errors, OR if all DS1-BD errors have been resolved, enter **test synchronization r 4** to determine if the alarm is still present. If all repetitions of the tests pass, the alarm no longer exists. Otherwise, the system technician should be dispatched with a spare CI card to perform the following instructions on-site.

Continued on next page

Table 9-347. TEST #161 Loop Around Test — *Continued*

Error Code	Test Result	Description/ Recommendation
8	FAIL *(cont'd.)*	If you are ON-SITE, use the following procedure: 1. Look for a red LED on a CI card B (the CI card on the right). If there is a red LED, then replace the CI card, if a spare is available. If no spare CI is available on-site, proceed to Step 3. If, after replacing the CI card, the red LED on the new CI card lights, proceed to Step 3. 2. Otherwise, enter **test synchronization r 4** to clear the alarm. If any test repetitions fail, follow the procedure for those failures. 3. Enter **display errors** and look for DS1-BD errors. If there are any, refer to DS1-BD in Chapter 9, "Maintenance Object Repair Procedures". If there are no DS1-BD errors, proceed to Step 5. 4. After all DS1-BD errors have been resolved, determine if the alarm still exists with **test synchronization r 4**. If any test repetitions fail, follow procedures for those failures. 5. Check the DS1 reference A connections to the Stratum 3 clock. 6. Determine if the alarm still exists with **test synchronization r 4** to clear the alarm. If any test repetitions fail, then follow procedures for those failures. If the problem persists after you have performed this procedure three times, follow normal escalation procedures.

Continued on next page

Table 9-347. TEST #161 Loop Around Test — *Continued*

Error Code	Test Result	Description/ Recommendation
16	FAIL	All power supplies failed. 1. Replace the failed power supplies. 2. If battery backup for the Stratum 3 clock is not supplied or if the battery backup holdover time has been exceeded, then the system will be referencing the local oscillator on the Active TN780 Tone-Clock circuit pack until software detects that one or both power supplies has(have) been restored (approximately 40 minutes). To speed up this restoration, issue the **test synchronization r 4** command. All tests should pass. If any repetitions should fail, then follow the procedures for those failures. If the problem persists after you have performed this procedure three times, then follow normal escalation procedures. The battery backup is located under the Stratum 3 clock carrier.
32	FAIL	All clock unit(s) failed. 1. Look at the Stratum 3 cabinet for red LEDs on circuit cards marked ‘‘ST3.’’ Replace the card(s). 2. Determine if the alarm still exists by issuing the **test synchronization r 4** command to clear the alarm. If any test repetitions fail, then follow the procedure for those failures. If the problem persists after you have performed this procedure three times, then follow normal escalation procedures.
2101	FAIL	The TN780 Tone-Clock circuit pack detects loss of signal. Refer to note h of the STRAT-3 Hardware Error Log Entries table in the STRAT-3 (Stratum 3 Clock) Maintenance documentation for replacement procedures.
	PASS	The Stratum 3 clock has reported that it has no alarm conditions. If synchronization problems have been reported, look for SYNC errors and refer to SYNC (Synchronization) Maintenance documentation for recommended strategy for those errors.

SVC-SLOT (Service Slot)

MO Name As It Appears in Alarm Log	Alarm Level	Initial System Technician Command to Run	Full Name of MO
SVC-SLOT	MINOR	none	Service Slot

The Service Slot maintenance object detects the insertion of an invalid circuit pack a dedicated SERVICE slot. The SERVICE slot is the leftmost slot in the J58890BB Port Carrier, and is identified as slot location "00" in all commands, field entries, and displays on the management terminal.

Since this slot does not provide tip and ring connectivity to the wall field, only the following circuit packs are allowed:

- TN744 Call Classifier
- TN750 Integrated Announcement
- TN771 Maintenance/Test
- TN725 Speech Synthesizer
- TN433 Speech Synthesizer
- TN457 Speech Synthesizer
- TN748 Tone Detector
- TN420 Tone Detector
- TN755 Neon Power Unit

A MINOR alarm is generated against the Service Slot maintenance object when a circuit pack with a type other than that listed above is inserted in a SERVICE slot.

The Service Slot maintenance object name is used instead of the maintenance object name for the illegal circuit pack to prevent any attempt to assign a port to an illegal circuit pack physically inserted in the SERVICE slot.

Hardware Error Log Entries and Test to Clear Values

Service Slot Error Log Entries

Error Type	Aux Data	Associated Test	Alarm Level	On/Off Board	Test to Clear Value
600(a)		None	MINOR	ON	

Note:

a. Error type 600 indicates that a non-permitted circuit pack was inserted in slot 00, the SERVICE slot, of a J58890BB port carrier. See the preceding list of valid circuit packs for this slot.

The code of the invalid circuit pack can be displayed by using the **list configuration board UUCSS** command where UU is the cabinet number, C is the carrier letter, and SS is the slot number (always 00) of the alarmed circuit pack.

To retire the alarm, remove the invalid circuit pack.

SW-CTL (Switch Control)

MO Name As It Appears in Alarm Log	Alarm Level	Initial System Technician Command to Run (a)	Full Name of MO
SW-CTL	MAJOR(b)	test switch-control [a|b] short	Switch Control
SW-CTL	WARNING	test switch-control [a|b] short	Switch Control

a. In a system with simplex SPE, the carrier location, a need not be specified. In a system with duplicated SPEs, carrier a or b must be specified.

b. After a spontaneous SPE interchange has occurred, the Alarm Log retains for three hours a record of any MAJOR ON-BOARD alarm against an SPE component that took place before the interchange. If a spontaneous interchange has occurred (as indicated by STBY-SPE error type 103 or the **display initcauses** screen), and such an alarm is logged against SW-CTL, then replace the standby MSSNET circuit pack using the "lock-and-power-down" procedure described in Chapter 5, "Responding to Alarms and Errors".

The Switch Control resides on the MSSNET (Mass Storage System and Network Control) circuit pack (UN332). The Mass Storage System Host Adapter (HA) also resides on the MSSNET circuit pack. Systems equipped with the Standard Reliability configuration have a single MSSNET circuit pack and systems equipped with the High Reliability or Critical Reliability configuration have two MSSNET circuit packs, one in each Switch Processing Element (SPE) complex. The MSSNET cannot be replaced in a system with one SPE complex without bringing the system down. The MSSNET in the standby SPE of a system equipped with the High Reliability or Critical Reliability option can be replaced without affecting normal system operation.

The Switch Control sends control information between the SPE and port circuit packs on the Processor Port Network (PPN) as shown in Figure 9-103 on page S-256. This control information is sent via the PPN cabinet's TDM (Time Division Multiplexed) bus. The portion of the TDM bus used to transmit control messages is called the control channel. The control channel can be on either TDM bus A or TDM bus B, but only one of the two buses is used for the control channel at any give time.

The Switch Control is involved in sending control channel messages for the setup and takedown of all calls involving endpoints connected to the PPN, but is not involved in the voice or data transmission that takes place during established calls. The Switch Control is also involved in setting up system links used for control of calls involving endpoints connected to Expansion Port Networks (EPNs). Once those links are set up at system boot time, a failure of the Switch Control will not affect existing calls or new calls involving those EPN endpoints.

One of the functions of the Switch Control is to detect when port circuit packs are plugged into or removed from the PPN cabinet. The Switch Control also monitors the health of the control channel on the PPN cabinet TDM bus and informs the SPE when errors occur.

The Switch Control also contains hardware to monitor critical system timing signals and informs the SPE when these signals fail. For example, if the timing signals from a Tone/Clock circuit pack fail, the Switch Control will inform the SPE and the SPE can then switch to a standby Tone/Clock circuit pack, (if Tone-Clocks are duplicated).

On High and Critical Reliability systems (duplicated SPE), a MAJOR alarm failure of the Switch Control circuit on the active SPE results in an SPE interchange, if the health of the standby SPE permits. (Refer to Chapter 1, "Maintenance Architecture" for more information about duplicated SPEs.) The following sections assume that if the SPEs are duplicated, and if a Switch Control circuit has a MAJOR alarm, the MSSNET circuit pack associated with that Switch Control circuit is located in the standby SPE.

As mentioned above, the MSSNET circuit pack contains both the Switch Control circuit and the MSS Host Adapter circuit. A failure of either circuit will light the red LED on the MSSNET circuit pack.

The **test mssnet** command tests both the Switch Control circuit and the MSS Host Adapter circuit on the MSSNET circuit pack. Whenever the MSSNET circuit pack is replaced, **test mssnet** should be used to verify that both circuits are operating correctly.

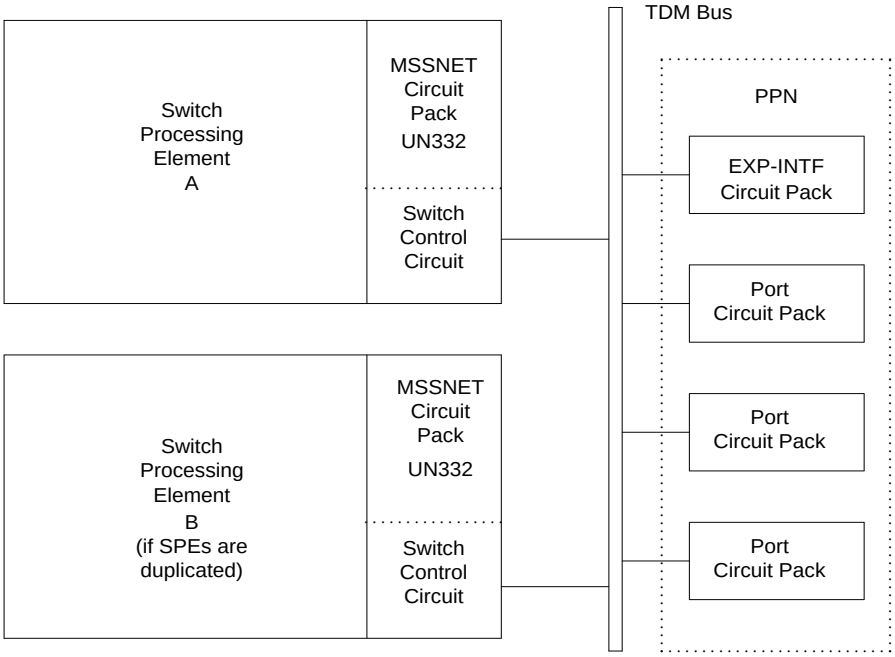

Figure 9-103. Switch Control Connectivity

Hardware Error Log Entries and Test to Clear Values

Switch Control Error Log Entries

Error Type	Aux Data	Associated Test	Alarm Level	On/Off Board	Test to Clear Value
0*	0	Any	Any	Any	test switch-control [a|b] r 3
1(a)		Control Transmission Test (#94)Channel	MAJOR†	ON	test switch-control [a|b] r 3
2(b)		Control Channel Transmission Test (#94)	MAJOR†	ON	test switch-control [a|b] r 3
150(c)	Any	None	MAJOR†	ON	test switch-control [a|b] l c
257(d)	Any	None			
769(e)		None			
1025(f)		Control Channel Interface Test (#92)	MAJOR†	ON	test switch-control [a|b] r 2
1281(g)		None			
1537(h)		Switch Control Reset Test (#93)	MAJOR†	ON	test switch-control [a|b] l r 2
1793(i)		None			
2561(j)		None	WARNING	OFF	

* Indicates that an alarm was raised but the associated error could not be entered into the hardware error log due to a momentary overload condition. Run the short test sequence and refer to the appropriate test description for tests that fail.

† After a spontaneous SPE interchange has occurred, the Alarm Log retains for three hours a record of any MAJOR ON-BOARD alarm against an SPE component that took place before the interchange. If a spontaneous interchange has occurred (as indicated by STBY-SPE error type 103 or the **display initcauses** screen), and such an alarm is logged against SW-CTL, then replace the standby MSSNET circuit pack using the "lock-and-power-down" procedure described in Chapter 5, 'Responding to Alarms and Errors".

Notes:

a. A 1 error indicates that there has been 8 or more Processor Port Network circuit pack removals in less than 15 minutes. This action may be forced manually by removing power to a port carrier or pulling out at least 8 port

circuit packs within 15 minutes. The generation of this error may indicate that there is a problem with the Switch Control circuit on the MSSNET circuit pack or that there is a problem with the TDM bus. Three successful completions of the Control Channel test (#94) will resolve the MAJOR alarm caused by this error.

b. A 2 error indicates that the Switch Control Channel Transmission test (#94) failed. This error may not cause a Switch Control alarm if Error Type 769 is also present since this error may actually be caused by the loss of clock signals and not by a Switch Control failure. If the system is not equipped with the High Reliability or Critical Reliability option, or if the Switch control circuit is on the active processor, use the **test switch-control** command to test the Switch Control.

   In a system is equipped with duplicated SPEs and the hardware error is reported against the Switch Control on the standby processor, use the following procedures. The Control Channel Transmission test which detected this error cannot run on the Switch Control circuit on the standby SPE since the Switch Control circuit on the standby SPE is not allowed access to the TDM bus. Therefore if the system is equipped with duplicated SPEs and if this error is associated with the Switch Control circuit on the standby SPE, the error was detected while the Switch Control circuit was running on an active SPE.

   To allow the Control Channel test to run on this circuit, it will be necessary to initiate an SPE interchange, using the procedures described below. This action should only be taken during a time that would cause the least service disruption since exiting calls may disconnect if a failure detected on the newly active Switch Control circuit causes a spontaneous switch back to the other SPE. If this possible action is *not* acceptable, first verify that no TDM bus problems are detected when the **test TDM 1** command is entered and then replace the MSSNET circuit pack on the standby SPE. If TDM problems are detected, refer to the TDM-BUS maintenance documentation to clear those problems.

   1. Initiate a test of the Switch Control circuit on the standby SPE using the **test switch-control C long** command (where C represents the carrier location of the standby SPE) to make sure no other failure conditions can be detected. If failures are detected, use the diagnostic information associated with those tests to clear the failure before proceeding.
   2. Initiate an SPE interchange using the **reset system interchange** command. This should be done at a time that would cause the least service disruption since a fault may still exist on the MSSNET circuit pack. If the system reset command fails, refer to *Failure of Planned Interchange* in Chapter 5, "Responding to Alarms and Errors" for further actions.
   3. Enter the **test switch-control** command for the Switch Control now on the active SPE and verify that the Control Channel Transmission test (#94) passes. If a failure occurs, an automatic SPE interchange may occur. If an interchange back to the original SPE occurs,

replace the MSSNET board on the standby SPE and go back to step 1 above. If other failures are detected, use the repair procedures associated with those tests to clear the failure.

c. A 150 error indicates that a SPE interchange occurred and that the Switch Control circuit on the MSSNET circuit pack was the cause of the spontaneous interchange.

   1. If other SW-CTL errors are present, investigate those errors
   2. If no other SW-CTL errors are present, run the **test switch-control a|b long clear** command and investigate those failures.
   3. If all tests pass, follow normal escalation procedures.

d. A 257 error is logged when the Switch Control circuit reports that tests of its internal memory (RAM or ROM) have failed. The receipt of this error causes Switch Control maintenance to run specific Switch Control tests. If there is a problem, the Switch Control tests will normally cause other errors to be logged. In the rare case where no other errors are logged but 257 errors are occurring at a high rate (more than 10 in the last hour) the MSSNET circuit pack should be replaced during a time that would cause the least service disruption. If the system is equipped with the High Reliability or Critical Reliability Configuration this can be done immediately since a MSSNET circuit pack on the standby SPE can be replaced without affecting service.

e. A 769 error occurs when the Switch Control reports a loss of timing signals to the SPE. When this error is present, the Switch Control will not normally be alarmed since any Switch Control test failures are really the result of faulty signals from the Tone/Clock circuit pack. See the TDM-CLK maintenance documentation for the procedures needed to diagnose Tone/Clock circuit pack troubles.

f. A 1025 error indicates that there has been a failure of the Control Channel Interface Test (#92). Refer to the diagnostics for that test to clear the problem.

g. A 1281 error is called a Switch Control handshake error. It is an in-line error not produced by any test. The Aux Data for this error is not meaningful. This error can be ignored.

   The receipt of this errors causes Switch Control maintenance to run specific Switch Control tests. If there is a problem, the Switch Control tests would cause other errors to be logged. 1281 errors do not cause alarms so there is no specific action that can be taken when these errors are observed.

h. A 1537 error indicates that the Switch Control Reset test (#92) failed. A MAJOR alarm is raised if this test fails. Refer to the repair procedures for the Switch Control Reset test (#93).

i. A 1793 error is an in-line error that indicates a possible problem with the interface between the Switch Control and the SPE. The Aux Data for this error is not meaningful. The receipt of this error causes Switch Control

maintenance to run specific Switch Control tests. If there is a problem, the Switch Control tests will normally cause other errors to be logged. In the rare case where no other errors are logged but 1793 errors are occurring at a high rate (more than 10 in the last hour) the MSSNET circuit pack should be replaced during a time that would cause the least service disruption. If the system is equipped with the High Reliability or Critical Reliability Configuration this can be done immediately since a MSSNET circuit pack on the standby SPE can be replaced without affecting service.

j. A 2561 error indicates that a software message buffer for downlink port board messages has overflowed and those messages were thrown away. The Aux Data for this error is not meaningful. The SPE is sending more downlink port board messages to the Switch Control than the Switch Control is able to process. A WARNING alarm for this condition will automatically be resolved if no errors of this type are detected within a 15 minute period. If no other errors are logged but 2561 errors are occurring at a high rate (more than 10 in the last hour), follow normal escalation procedures.

System Technician-Demanded Tests: Descriptions and Error Codes

Always investigate tests in the order presented in the table below when inspecting errors in the system. By clearing error codes associated with the *Switch Control Reset Test* for example, you may also clear errors generated from other tests in the testing sequence.

Order of Investigation	Short Test Sequence	Long Test Sequence	Reset Board Sequence	D/ND*
Switch Control Reset Test (#93)		X		D
Control Channel Interface Test (#92)	X	X		ND
Control Channel Transmission Test (#94)†	X	X		ND

* D = Destructive; ND = Nondestructive

† When the SPE is duplicated, this test runs only on the Switch Control circuit on the active SPE. An interchange must be performed to test the other one.

Switch Control Channel Interface Test (#92)

Loop-back messages are sent to the Switch Control via the interface used for control channel messages. The messages are returned to the SPE for verification via the same interface. The TDM bus is not involved in this test since the messages are looped back on the MSSNET circuit pack.

Table 9-348. TEST #92 Control Channel Interface Test

Error Code	Test Result	Description/ Recommendation
1338	ABORT	The test is not allowed to run since a planned SPE interchange is in progress. This may be caused by a planned interchange initiated automatically during 24 hour scheduled testing. 1. Wait 3 minutes and retry the command. 2. If the test continues to abort, follow normal escalation procedures.
1339	ABORT	The test could not run on the standby Switch Control on the MSSNET circuit pack in the standby SPE carrier because the standby SPE is unavailable. 1. Refer to the STBY-SPE maintenance documentation for information on why a standby SPE may be unavailable and what repair actions should be taken. The screen for the **status spe** command should indicate that handshake is down. This may be caused by a variety of reasons such as the SPE-SELECT switches on the DUPINT circuit packs being set to the position of the active SPE, a failure of the DUPINT circuit pack, or loss of power on the standby SPE. The *SPE Selected* field on the **status spe** screen will display *spe a* or *spe b* if both SPE-SELECT switches are in the a or b positions, respectively.

Continued on next page

Table 9-348. TEST #92 Control Channel Interface Test — *Continued*

Error Code	Test Result	Description/ Recommendation
2000	ABORT	Response to the test request was not received within the allowable time period. If the system is equipped with the High Reliability or Critical Reliability Configuration and if the MSSNET circuit pack is on the standby SPE, this abort code may indicate that the standby SPE is not responding to the handshake message. If this is the case, the standby SPE maintenance software may take up to two minutes to indicate that handshake communication with the standby SPE is down. The ABORT code will then change to 1339 (standby SPE unavailable). 1. Retry the command at 1 minute intervals, a maximum of 3 times. 2. If the test continues to abort with this abort code, follow normal escalation procedures.
2012 2500	ABORT	Internal System Error 1. Retry the command. 2. If the test continues to abort, follow normal escalation procedures.
2100 none	ABORT	Could not allocate the necessary system resources to run this test. 1. Retry the command at 1 minute intervals a maximum of 3 retries. 2. If the test continues to abort, follow normal escalation procedures.
2334	ABORT	The hardware mailbox in the standby Duplication Interface circuit pack is not ready to receive messages. 1. Retry the command at 1 minute intervals for a maximum of 5 times. 2. If the test continues to abort with this abort code, follow normal escalation procedures.

Continued on next page

Table 9-348. TEST #92 Control Channel Interface Test — *Continued*

Error Code	Test Result	Description/ Recommendation
Any	FAIL	Messages could not be looped back through the control channel interface. If the system is equipped with the Standard Reliability configuration, you will probably not be able to make or receive calls involving telephones connected to the Processor Port Network. 1. This failure could be due to either a MSSNET circuit pack hardware failure or the loss of system timing signals. If the Switch Control is alarmed, then a MSSNET circuit pack failure should be suspected. If the Switch Control is not alarmed, then investigate the possibility of the loss of system timing signals before attempting to replace the MSSNET circuit pack. See TDM-CLK maintenance documentation. A TDM Bus Clock problem may cause many port circuit pack red LEDs to light. If only the MSSNET circuit pack LED is lit, suspect the MSSNET circuit pack. If many port circuit pack red LEDs are lit, suspect a TDM Bus Clock problem. Test #92 and Test #94 run as part of the test sequence for the **test switch-control C** command (where C represents the carrier location of the circuit under test). Both tests will fail if the system timing signals are lost. If test #94 passes, then do not suspect the loss of timing signals.

Continued on next page

Table 9-348. TEST #92 Control Channel Interface Test — *Continued*

Error Code	Test Result	Description/ Recommendation
Any *(cont'd.)*	FAIL	2. Run the short test sequence several times to make sure that this failure is occurring consistently. Then run the long test sequence to reset the Switch Control. Sometimes running the long test sequence may clear the problem. If the test is still failing, proceed to step 3 or 4. 3. If the system is still able to process calls, replace the MSSNET circuit pack during a time that would cause the least service disruption. If the system is equipped with the High Reliability or Critical Reliability Configuration this can be done immediately since a MSSNET circuit pack on the standby SPE can be replaced without affecting service. The procedure for replacing the MSSNET circuit pack is described in "Replacing SPE Circuit Packs" in Chapter 5, 'Responding to Alarms and Errors". 4. If calls cannot be made, then replace the MSSNET circuit pack immediately. The procedure for replacing the MSSNET circuit pack is described in “Replacing SPE Circuit Packs’’ in Chapter 5, 'Responding to Alarms and Errors".
	PASS	The control channel interface between the SPE and the Switch Control is working correctly

Switch Control Reset Test (#93)

This test is destructive if the Switch Control is on the active SPE.

This test resets the Switch Control and determines if it can successfully go through its initialization sequence. The test is destructive if the Switch Control circuit is on an active SPE since there is the possibility of losing some control messages to or from port circuit packs. This test will not affect established calls but call setup may be affected for several seconds.

Table 9-349. TEST #93 Switch Control Reset Test

Error Code	Test Result	Description/ Recommendation
1338	ABORT	The test is not allowed to run since a planned SPE interchange is in progress. This may be caused by a planned interchange initiated automatically during 24 hour scheduled testing. 1. Wait 3 minutes and retry the command. 2. If the test continues to abort, follow normal escalation procedures.
1339	ABORT	The test could not run on the standby Switch Control on the MSSNET circuit pack in the standby SPE carrier because the standby SPE is unavailable. 1. Refer to the STBY-SPE maintenance documentation for information on why a standby SPE may be unavailable and what repair actions should be taken. The screen for the **status spe** command should indicate that handshake is down. This may be caused by a variety of reasons such as the SPE-SELECT switches on the DUPINT circuit packs being set to the position of the active SPE, a failure of the DUPINT circuit pack, or loss of power on the standby SPE. The *SPE Selected* field on the **status spe** screen will display *spe a* or *spe b* if the SPE-SELECT switches are in the a or b positions, respectively.

Continued on next page

Table 9-349. TEST #93 Switch Control Reset Test — *Continued*

Error Code	Test Result	Description/ Recommendation
2000	ABORT	Response to the test request was not received within the allowable time period. If the system is equipped with the High Reliability or Critical Reliability Configuration and if the MSSNET circuit pack is on the standby SPE, this abort code may indicate that the standby SPE is not responding to the handshake message. If this is the case, the standby SPE maintenance software may take up to two minutes to indicate that handshake communication with the standby SPE is down. The ABORT code will then change to 1339 (standby SPE unavailable). 1. Retry the command at 1 minute intervals, a maximum of 3 times. 2. If the test continues to abort with this abort code, follow normal escalation procedures.
2012	ABORT	Request for results timed out.
2500	ABORT	Internal System Error 1. Retry the command two times. 2. If the test continues to abort, follow normal escalation procedures.
2013 2100 none	ABORT	Could not allocate the necessary system resources to run this test. 1. Retry the command at 1 minute intervals a maximum of 3 retries. 2. If the test continues to abort, follow normal escalation procedures.
2334	ABORT	The hardware mailbox in the standby Duplication Interface circuit pack is not ready to receive messages. 1. Retry the command at 1 minute intervals for a maximum of 5 times. 2. If the test continues to abort with this abort code, follow normal escalation procedures.

Continued on next page

Table 9-349. TEST #93 Switch Control Reset Test — *Continued*

Error Code	Test Result	Description/ Recommendation
	FAIL	The Switch Control could not be successfully reset. If the system is equipped with the Standard Reliability configuration, you will probably not be able to make or receive calls involving telephones connected to the Processor Port Network. 1. This failure could be due to either a MSSNET circuit pack hardware failure or the loss of system timing signals. If the Switch Control is alarmed, then a MSSNET circuit pack failure should be suspected. If the Switch Control is not alarmed, then investigate the possibility of the loss of system timing signals. See the TDM-CLK maintenance documentation. A TDM Bus Clock problem may cause many port circuit pack red LEDs to light. If only the MSSNET circuit pack LED is lit, suspect the MSSNET circuit pack. If many port circuit pack red LEDs are lit, suspect a TDM Bus Clock problem. Test #92 and Test #94 run as part of the test sequence for the **test switch-control C** command (where C represents the carrier location of the circuit under test). Both tests will fail if the system timing signals are lost. If test #94 passes, then do not suspect the loss of timing signals. If the MSSNET circuit pack is determined to be at fault, proceed to step 2. 2. If the system is still able to process calls, replace the MSSNET circuit pack during a time that would cause the least service disruption. If the system is equipped with the High Reliability or Critical Reliability Configuration this can be done immediately since a MSSNET circuit pack on the standby SPE can be replaced without affecting service. The procedure for replacing the MSSNET circuit pack is described in “Replacing SPE Circuit Packs’’ in Chapter 5, "Responding to Alarms and Errors". 3. If calls cannot be made, then replace the MSSNET circuit pack immediately. The procedure for replacing the MSSNET circuit pack is described in “Replacing SPE Circuit Packs’’ in Chapter 5, "Responding to Alarms and Errors".

Continued on next page

Table 9-349. TEST #93 Switch Control Reset Test — *Continued*

Error Code	Test Result	Description/ Recommendation
	PASS	The Switch Control has initialized correctly. Look at results of the other tests to see if it is operating correctly.

Switch Control-Channel Transmission Test (#94)

Control channel messages are sent from the SPE to selected port circuit packs and the response from the port circuit packs is checked. This tests the ability of the Switch Control to send and receive messages on the control channel of the TDM bus.

For the case when the system is equipped with the High Reliability or Critical Reliability configuration, this test cannot run on the Switch Control in a standby SPE. However, this test may have run and failed while the Switch Control was on the active SPE which will alarm the Switch Control and cause an SPE interchange. In that case, Error Types 2 and 150 will be entered in the error log for the Switch Control on the standby SPE, indicating that a failure of the Switch Control Transmission Test caused a spontaneous SPE interchange. Refer to the Error Log information presented earlier in this repair document for the procedures to clear problems associated with a SW-CTL error log entry of 2.

Table 9-350. TEST #94 Control Channel Transmission Test

Error Code	Test Result	Description/ Recommendation
0	ABORT	The port circuit packs necessary for this test are not available. For this test to pass, it must receive a successful response to a circuit pack query message from at least one of the following circuit pack types in the PPN cabinet: Tone/Clock circuit pack (TN768 or TN780) Tone Detector circuit pack (TN599) 1. Retry the command at 1 minute intervals a maximum of 5 retries. 2. If the test keeps aborting with this abort code, replace the MSSNET circuit pack. 3. If the test keeps aborting with this abort code, verify that the PPN has at least one of the circuit packs listed above. 4. If the test continues to abort, follow normal escalation procedures.
1335	ABORT	Internal System Error. The MSSNET circuit pack is on the standby SPE and this test is not allowed to execute on a MSSNET circuit pack on the standby SPE. 1. If this abort code is received for a Switch Control on a standby SPE in a system equipped with the High Reliability or Critical Reliability configuration, there must be a software error. Test #94 is not allowed to run on a standby Switch Control. Follow normal escalation procedures. 2. Retry the command at 1 minute intervals, a maximum of 5 times. 3. If the test continues to abort, follow normal escalation procedures.
1338	ABORT	The test is not allowed to run since a planned SPE interchange is in progress. This may be caused by a planned interchange initiated automatically during 24 hour scheduled testing. 1. Wait 3 minutes and retry the command. 2. If the test continues to abort, follow normal escalation procedures.

Continued on next page

Table 9-350. TEST #94 Control Channel Transmission Test — *Continued*

Error Code	Test Result	Description/ Recommendation
2012 2500	ABORT	Internal System Error 1. Retry the command. 2. If the test continues to abort, follow normal escalation procedures.
2013 2100 none	ABORT	Could not allocate the necessary system resources to run this test. 1. Retry the command at 1 minute intervals a maximum of 3 retries. 2. If the test continues to abort, follow normal escalation procedures.

Continued on next page

Table 9-350. TEST #94 Control Channel Transmission Test — *Continued*

Error Code	Test Result	Description/ Recommendation
0	FAIL	The Switch Control cannot communicate on the TDM bus control channel. If the system is equipped with the Standard Reliability configuration, you will probably not be able to make or receive calls involving telephones connected to the Processor Port Network. 1. Run the short test sequence several times to make sure that this failure is occurring consistently. Then run the long test sequence to reset the Switch Control. Sometimes, running the long test sequence may clear the problem. Remember that the long test sequence is *destructive*. Placing and receiving of calls will be affected for several seconds. 2. If there are no TDM Bus alarms against the standby TDM bus, switch the control channel from its current bus to the standby bus using the **set tdm** command. Refer to the TDM-BUS maintenance documentation for information on how to use this command. If this test passes on the new bus, then investigate the possibility of TDM Bus failures. If the test fails even after the control channel is switched to the standby TDM bus, then proceed to Step 3 or 4. 3. If the system is still able to process calls, replace the MSSNET circuit pack during a time that would cause the least service disruption. If the system is equipped with the High Reliability or Critical Reliability Configuration this can be done immediately since a MSSNET circuit pack on the standby SPE can be replaced without affecting service. The procedure for replacing the MSSNET circuit pack is described in “Replacing SPE Circuit Packs’’ in Chapter 5, 'Responding to Alarms and Errors". 4. If calls cannot be made, then replace the MSSNET circuit pack immediately. The procedure for replacing the MSSNET circuit pack is described in “Replacing SPE Circuit Packs’’ Chapter 5, 'Responding to Alarms and Errors".
	PASS	The Switch Control can communicate with selected port circuit packs over the TDM bus.

SYNC (Synchronization)

MO Name As It Appears in Alarm Log	Alarm Level	Initial System Technician Command to Run	Full Name of MO
SYNC	MINOR	display errors	Synchronization
SYNC	WARNING	test synchronization	Synchronization

This section discusses synchronization problems local to the switch. For further information about synchronization including network synchronization, see the *AT&T Network and Data Connectivity* document 555-025-201.

Synchronization Maintenance is composed of both hardware and software components and its purpose is to provide a common reference frequency for reliable digital communication between the G3r system and other PBXs, Central Offices(COs) or Customer-Premises Equipment (CPE). Synchronization is implemented using several system components including:

- TN768 or TN780 Tone-Clock
- TN722, TN767 and TN 464 DS1 Interfaces (all suffixes)
- TN572 Switch Node Clock
- TN573 Switch Node Interface
- TN570 Expansion Interface

Synchronization is achieved between the Processor Port Network (PPN) and the Expansion Port Networks (EPNs) via the port network connectivity (PNC) between the networks. Depending on the network synchronization plan and the status of synchronization sources, the system timing reference may be a Tone-Clock circuit pack, DS1 interface or UDS1 circuit packs, or an external Stratum 3 clock. Stratum 4 synchronization extracts timing information directly from a DS1 reference, UDS1 reference, or a Tone-Clock. Stratum 3 synchronization requires the use of a Stratum 3 clock which provides a timing signal, derived from DS1 references, to the TN780 Tone-Clock circuit pack. The external Stratum 3 clock is a more stable timing source than the Stratum 4 clock and provides 24-hour holdover in case of reference failures. The Stratum 3 clock has redundant components.

If both a primary and a secondary reference are administered for Stratum 4 synchronization, both references must reside in the same port network.

Stratum 4 Synchronization

The system can be configured with primary and secondary synchronization references (DS1 or UDS1 interface circuit packs) when using Stratum 4 synchronization. If this system is the master for the network, then its local

oscillator would be used and no DS1s would be used as references. If this system is a slave in the network, a primary reference must be used as the synchronization reference and the secondary reference is optional.

If the primary synchronization reference is not providing a valid timing signal, the system will automatically switch to the secondary synchronization reference. With the primary synchronization reference invalid if the secondary reference does not provide a valid timing signal or is not administered as a synchronization reference, a Tone-Clock circuit pack will provide the system timing source. If the system is using the local oscillator as the system timing source because the primary and secondary references are providing invalid timing signals, when either the primary or secondary reference becomes valid again, the system will switch back to the primary or secondary source. When both the primary and secondary source become valid, the system will switch to the primary source since the primary source is always preferred over the secondary source when both sources are equally healthy. The following diagram should assist in understanding Stratum 4 Synchronization Maintenance components within the system. This diagram depicts a possible duplicated direct connect configuration.

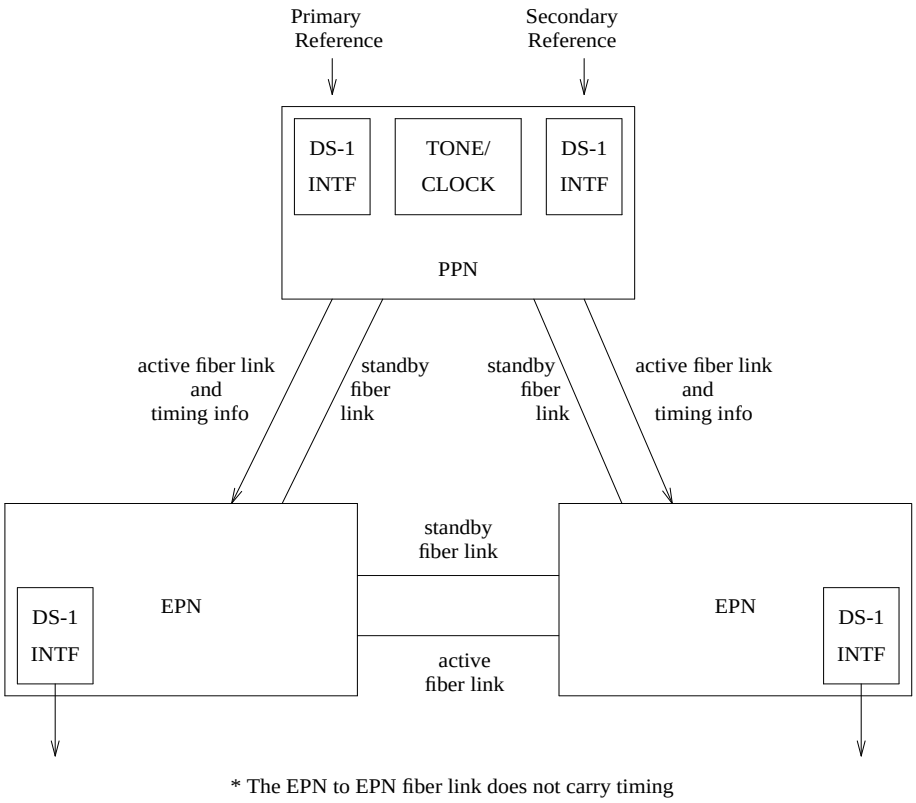

Figure 9-104. Duplicated Direct-Connect Stratum 4 Synchronization

If the primary synchronization reference, in the above diagram, is providing a valid timing signal, then the flow of system synchronization would travel from the DS1 interface circuit pack in the PPN across the active PPN to EPN fiber links to the two EPNs. The PPN DS1 interface circuit pack provides a timing signal for the PPN Tone-Clock circuit pack and the PPN Tone-Clock circuit pack provides timing for all circuit packs in the PPN. Each PPN Expansion Interface circuit pack uses the timing generated by the Tone-Clock circuit pack to clock data from the fiber links to the Expansion Interface circuit packs in the two EPNs. The active EPN Expansion Interface circuit pack uses the received data stream to generate a timing signal. The Tone-Clock circuit packs in the EPNs use this signal to generate timing for all the circuit packs in their respective EPNs. The PPN, in the above mentioned scenario, is designated the *master* port network and the EPNs are called *slave* port networks. The *master* port network is defined as the port network that contains the system synchronization source. If the primary synchronization reference does not provide a valid timing signal, Synchronization Maintenance will switch to the secondary reference. *Both the primary and secondary references must reside in the same port network, which may be any port network. The PPN is the recommended location.*

If TDM-CLK error 2305 is in the error log, then a slave Tone-Clock loss of signal condition exists on the slave Tone-Clock circuit pack that has this error. If only one loss of signal occurred, the slave Tone-Clock circuit pack is receiving the timing signal from the standby EI circuit pack (in this example, the timing is coming from the PPN to the EPN over the standby fiber link). If another loss of signal occurred after the Tone-clock circuit pack switched to receive timing from the standby EI, the Tone-clock circuit pack will run on its local oscillator. The yellow LED on the Tone-clock circuit pack flashes at the 2.7 seconds on and .3 seconds off rate (mostly on) if timing is received from an external source (an EI in this example). Otherwise, if the Tone-clock circuit pack is running on its local oscillator, the yellow LED flashes at the .3 seconds on and 2.7 seconds off rate (mostly off).

The TN722 DS1 Interface circuit pack does not provide a synchronization reference as reliable as the TN767 or TN464C circuit packs. Therefore, it is recommended that the TN767 or TN464C circuit packs are used as primary or secondary sources instead of the TN722 type DS1 circuit packs.

Stratum 3 Synchronization

The following diagram illustrates one possible configuration of Stratum 3 synchronization.

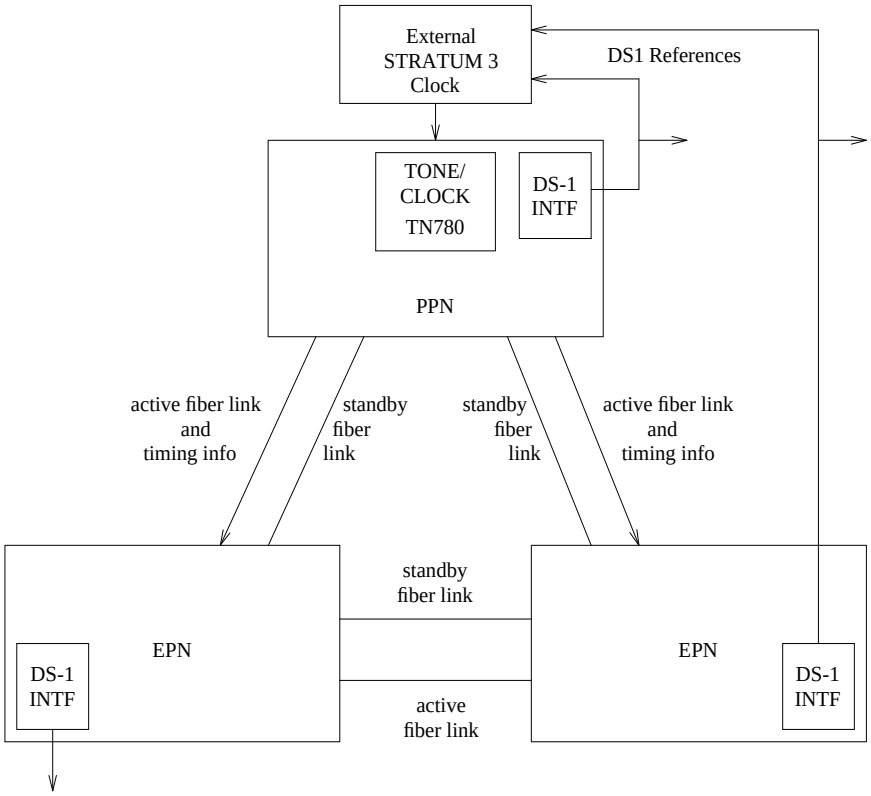

* The EPN to EPN fiber link does not carry timing

Figure 9-105. Typical Duplicated Direct Connect Stratum 3 Synchronization Configuration

For Stratum 3 synchronization, an external clock provides a timing signal to a TN780 Tone-Clock circuit pack, and the TN780 provides timing to all circuit packs in the PPN in which the TN780 resides (the external stratum 3 clock is only allowed in the PPN). Each PPN Expansion Interface circuit pack uses the timing generated by the TN780 to clock data from the active PPN to EPN fiber links. The active EPN Expansion Interface circuit packs use the received data stream to generate a timing signal which is used by the Tone-Clock circuit packs in the EPNs to provide timing for all circuit packs in their respective EPNs. (The EPN Tone-Clock circuit packs can be either TN780s or TN768s; only the Tone-Clock circuit pack(s) connected to the external Stratum 3 clock must be TN780s.) The PPN, in the above mentioned scenario, is designated the *master* port network and the EPNs are called *slave* port networks. The *master* port network is defined as the port network that contains the system synchronization source, the Stratum

3 clock in this case. The Stratum 4 equipment (usually a PBX) should never provide timing to a Stratum 3 PBX.

If TDM-CLK error 2305 is in the error log, then a slave Tone-Clock loss of signal condition exists on the slave Tone-Clock circuit pack that has this error. If only one loss of signal occurred, the slave Tone-Clock circuit pack is receiving the timing signal from the standby EI circuit pack (in this example, the timing is coming from the PPN to the EPN over the standby fiber link). If another loss of signal occurred after the Tone-clock circuit pack switched to receive timing from the standby EI, the Tone-clock circuit pack will run on its local oscillator. The yellow LED on the Tone-clock circuit pack flashes at the 2.7 seconds on and .3 seconds off rate (mostly on) if timing is received from an external source (an EI in this example). Otherwise, if the Tone-clock circuit pack is running on its local oscillator, the yellow LED flashes at the .3 seconds on and 2.7 seconds off rate (mostly off).

Synchronization in a Center Stage Switch Configuration

In the following typical duplicated Center Stage Switch (CSS) configuration, the timing signal from the *master* port network, the PPN in this diagram, is sent to all circuit packs in its network. The timing signal is sent from the Expansion Interface (EI) circuit packs in the PPN to the Switch Node Interface (SNI) circuit packs in the switch node carriers. The EIs in the *master* port network also sends out a timing priority number (TPN) of 1. Every *slave* port network EI sends out a TPN of 30. The active Switch Node Clock (SNC) circuit pack in each switch node carrier decides which SNI is providing the timing signal that the switch node carrier should synchronize to by looking at each SNI's incoming TPN. The SNC chooses the SNI with the lowest numbered TPN to synchronize to. The SNC then sends the timing signal to all SNIs and the standby SNC, if a standby SNC is present, in the switch node carrier. The SNC also sends out a TPN equal to 1 plus the lowest incoming TPN. Each SNI in the switch node sends the timing signal received from the SNC and the TPN from the SNC out on its associated fiber.

If TDM-CLK error 2305 is in the error log, then a slave Tone-Clock loss of signal condition exists on the slave Tone-Clock circuit pack that has this error. In this case, the slave Tone-Clock circuit pack is receiving the timing signal from the standby EI circuit pack in the port network that has the TDM-CLK 2305 error or from its local oscillator. The yellow LED on the Tone-clock circuit pack flashes at the 2.7 seconds on and .3 seconds off rate (mostly on) if timing is received from an external source (for example, an EI circuit pack). Otherwise, if the Tone-clock circuit pack is running on its local oscillator, the yellow LED flashes at the .3 seconds on and 2.7 seconds off rate (mostly off).

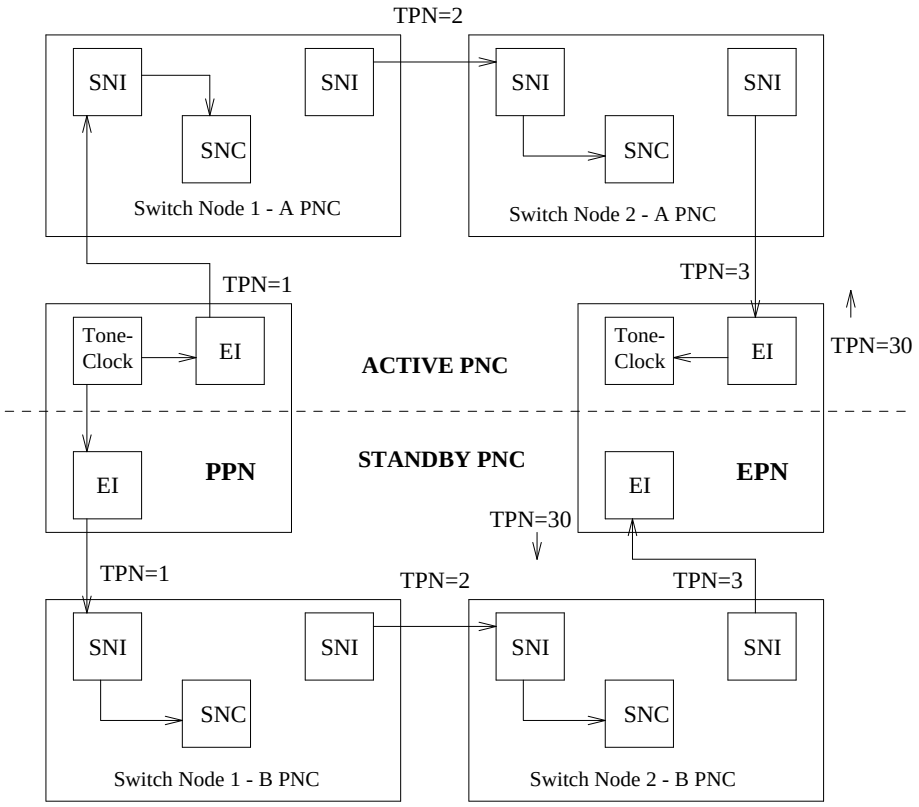

Timing information is sent through both the active and standby PNCs, but the EPNs normally derive timing from the EIs on the active PNC.

Figure 9-106. Typical Center Stage Switch Synchronization Configuration -Two Switch Nodes, Duplicated PNC

Synchronization Troubleshooting

For both Stratum 3 and 4 operation, major and minor alarms indicate that there is a problem with the system synchronization references. These alarms will be resolved when the alarmed synchronization reference is restored.

The **change synchronization** command is used to administer whether Stratum 3 or Stratum 4 synchronization is being used. The **change synchronization** command allows primary and secondary references to be administered for the Stratum 4 option.

The **status synchronization** command shows the current synchronization reference. The **display synchronization** command shows the synchronization references (e.g. primary, secondary, stratum 3) that are administered.

The **list timing-source** command displays all DS1 and UDS1 locations that are allowed to be administered as primary or secondary references with the **change synchronization** command.

Other commands associated with Synchronization Maintenance are **disable synchronization-switch** and **enable synchronization-switch.** These commands are used to disable the ability of Synchronization Maintenance to switch between synchronization references and to enable this switching ability, respectively. The **set synchronization** command is executed only after synchronization has been disabled and is used to manually switch to a specific synchronization reference. This command is useful to diagnose synchronization problems by forcing a specific reference (DS1, UDS1, or Tone-Clock) to be the system synchronization reference to determine if a specific reference is providing a valid timing signal. To switch synchronization to the Stratum 3 clock, use the **enable synchronization-switch** command after verifying that the Stratum 3 clock is wired correctly.

Approach to Troubleshooting

Slip errors are the primary symptom associated with being unsynchronized.

A correct Synchronization plan for the network keeps the systems within the network transmitting data at approximately the same rate to avoid situations where:

- One system transmits data at a rate faster than another system can receive the data (in which case data is lost).
- One system transmits data at a rate slower than another system expects to receive data (in which case data is repeated).

Either of these situations, data being lost or repeated, is a slip.

When troubleshooting synchronization problems when slips are the primary error log entry indications of a synchronization problem, requires that the problem be isolated to:

- A problem outside of the switch, i.e., the switch is not properly synchronized to the rest of the network.
- A problem internal to the switch.

DS1 and UDS1 circuit packs can be administered with slip detection enabled via the **Slip Detection?** field set to a **y** (see the **add ds1**, **change ds1**, and **display ds1** commands). All DS1 and UDS1 circuit packs administered as slip enabled will be counted in the following algorithm:

When over half of the DS1 and UDS1 circuit packs administered as slip enabled are experiencing slips, and the primary or secondary synchronization reference is the current synchronization reference, synchronization will try the other administered synchronization reference.

In situations where one or many circuit packs in the system are experiencing slips, the problem could be with the synchronization reference, with individual circuit packs, or with phase modulation of the transmitted digital bit streams due to environmental variations of the transmission facilities (such as temperature variations that affect the electrical length of a transmission line). The circuit packs that can experience slips and the associated error log entry for slips are as follows.

Table 9-351. Error Log Entries for Slip Errors

Circuit Pack	Error Log Name	Error Log Entry for Slips
DS1 Interface	DS1-BD	3073 to 3160
Expansion Interface	EXP-INTF	2305
Switch Node Interface	SNI-BD	1537
Tone-Clock	TDM-CLK	1025
UDS1 Interface	UDS1-BD	3073 to 3160

When slips occur on the circuit packs mentioned above, first consult the individual circuit pack section in the manual for each circuit pack that has slips. If slips occur in low numbers, they may be due to environmental conditions as described above. If no service degradation is occurring, no action is necessary. Whenever the system switches synchronization sources, slips can be expected from DS1-BD, UDS1-BD, and EXP-INTF circuit packs. If service degradation occurs, after following the repair steps in the individual section, use the following trouble shooting techniques.

The following table lists circuit packs that can report slips and related circuit packs whose hardware problems that cause those slips.

Slips and Related Circuit Packs

Circuit Pack Reporting Slips	Associated Circuit Packs That Can Cause Slips
DS1 Interface	Active Tone-Clock in same port network
Expansion Interface	Active Tone-Clock in same port network or circuit pack at opposite end of fiber or metallic connection
Switch Node Interface	Circuit pack at opposite end of fiber or metallic connection, or active Switch Node Clock circuit pack in same switch node carrier
Tone-Clock	Current DS1 reference
UDS1 Interface	Active Tone-Clock in same port network

Troubleshooting Synchronization Problems

The following flow chart presents a logical approach to troubleshooting synchronization problems in conjunction with the background information presented above. Explanatory notes follow the charts.

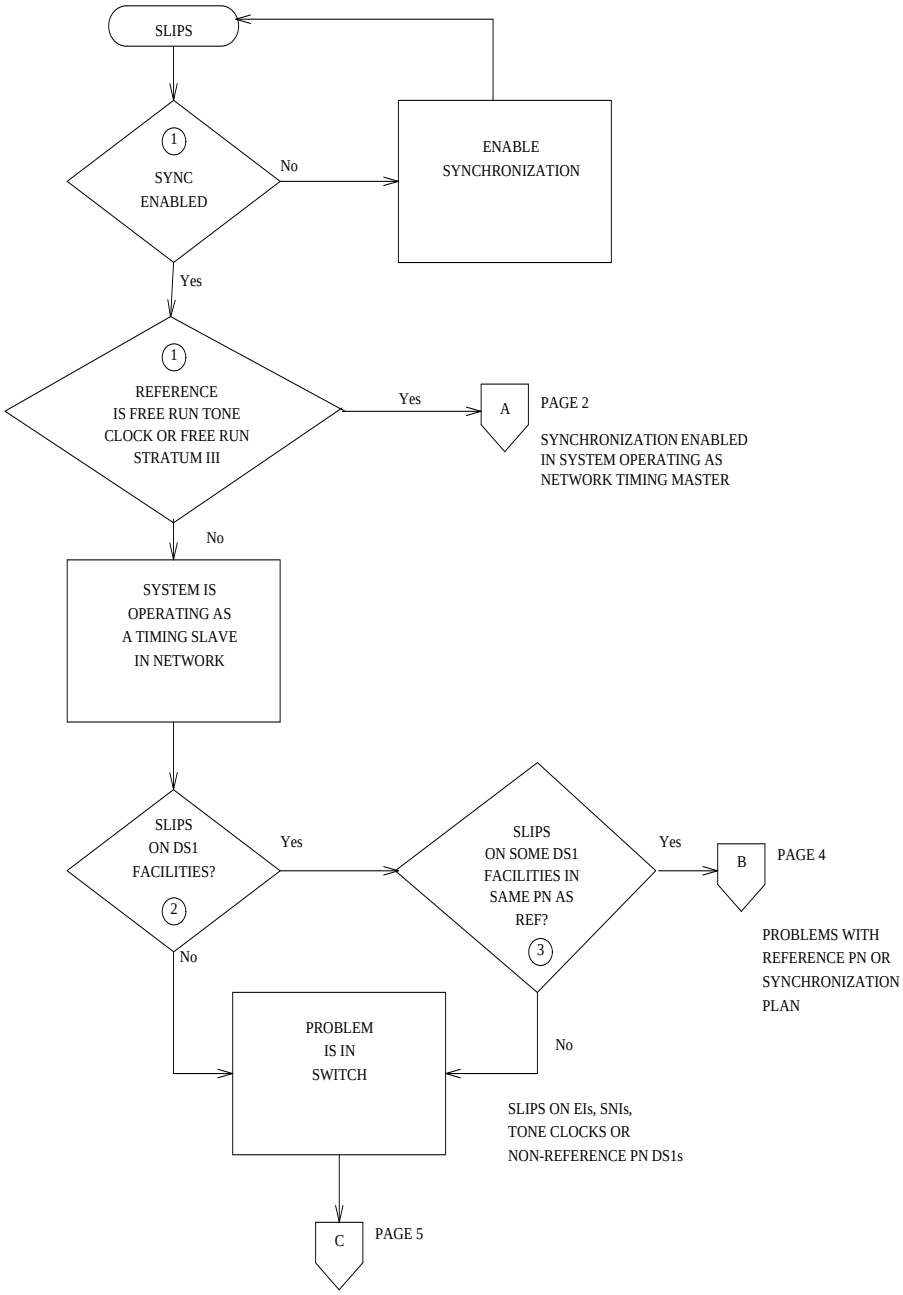

Figure 9-107. Synchronization Troubleshooting, Page 1 of 6

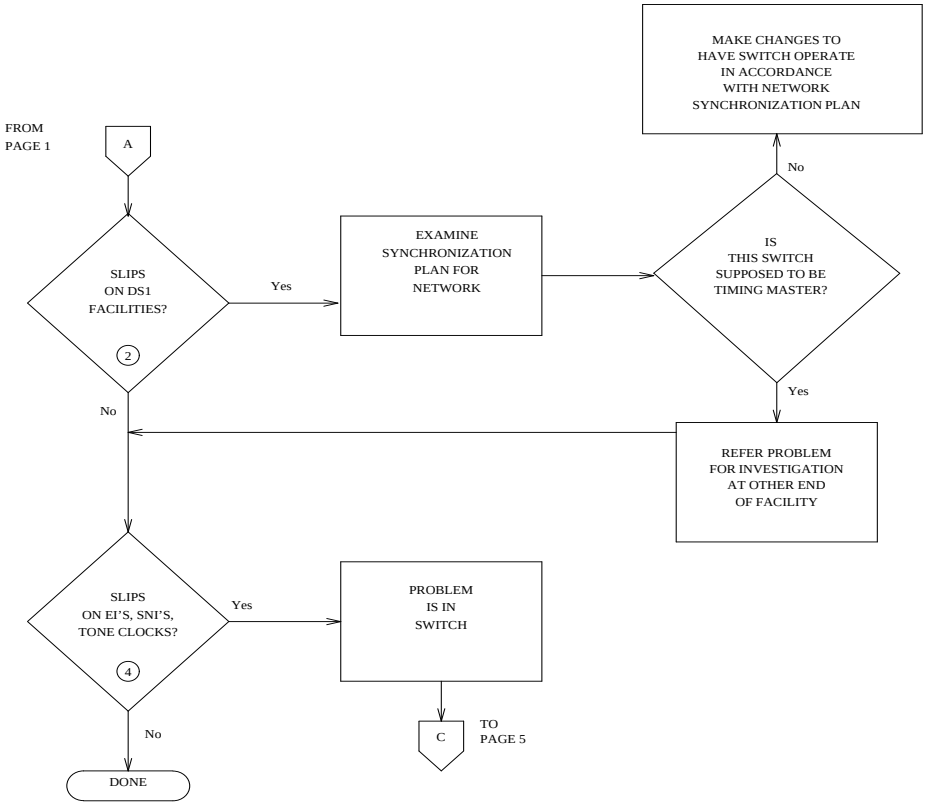

Figure 9-108. Synchronization Troubleshooting, Page 2 of 6

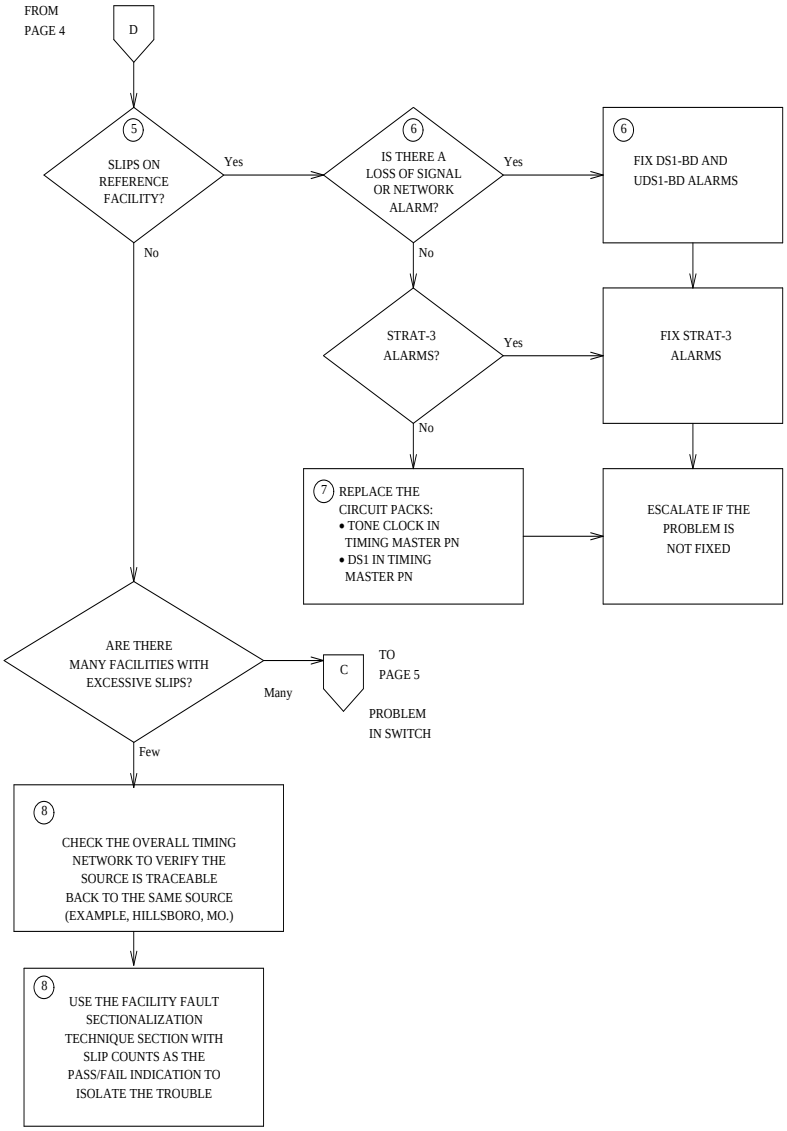

Figure 9-109. Synchronization Troubleshooting, Page 3 of 6

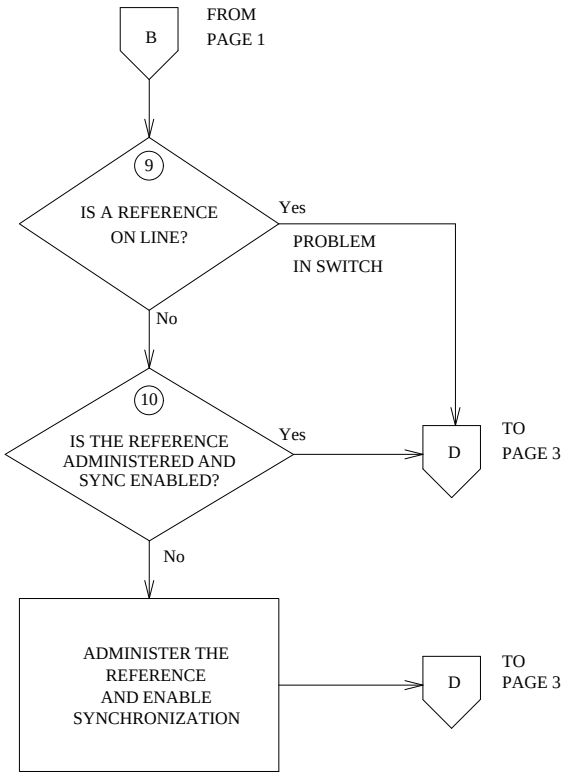

Figure 9-110. Synchronization Troubleshooting, Page 4 of 6

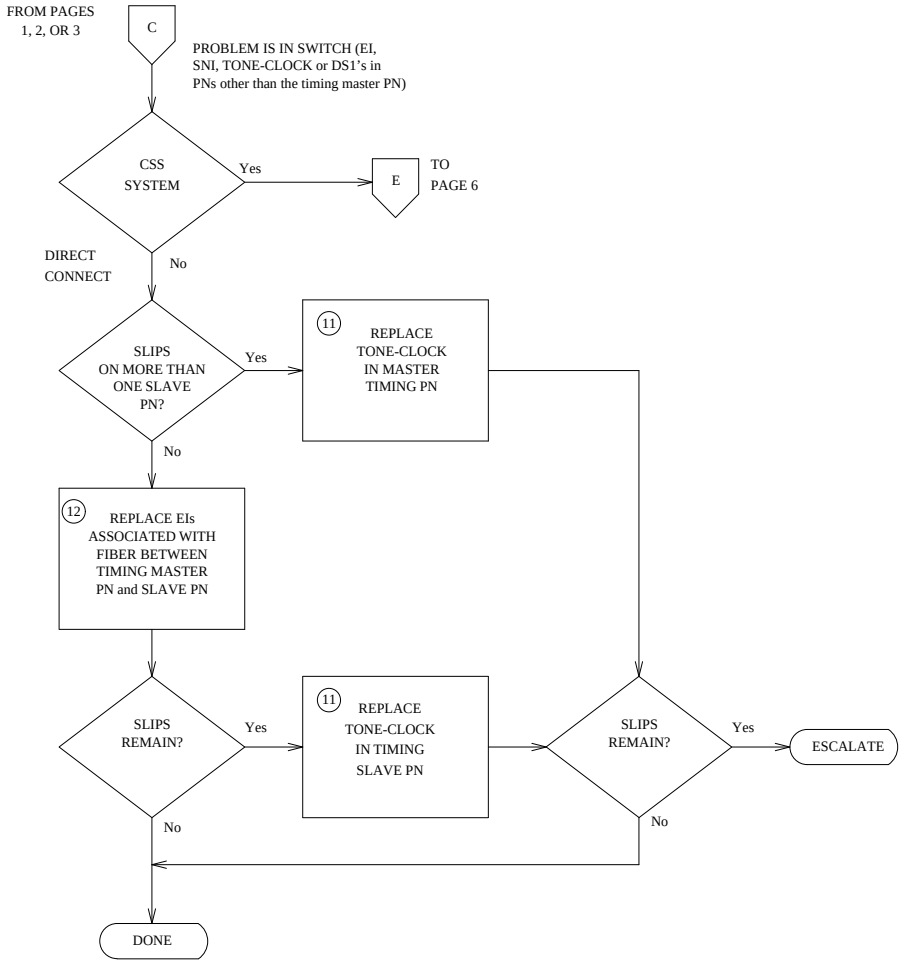

Figure 9-111. Synchronization Troubleshooting, Page 5 of 6

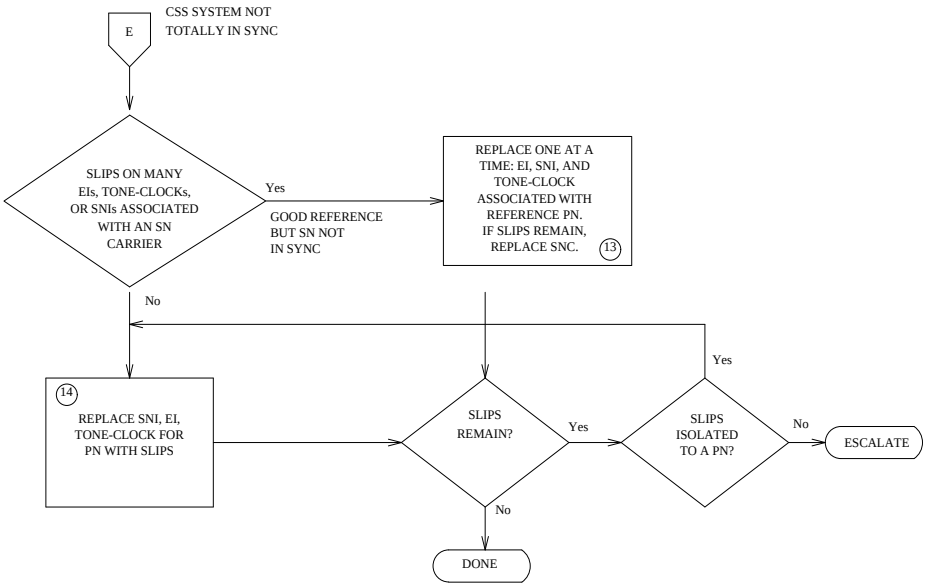

Figure 9-112. Synchronization Troubleshooting, Page 6 of 6

Notes for Sheet 1 through Sheet 6 flowcharts (when checking for slip errors, use Table 9-351 on page S-281, “Error Log Entries for Slip Errors”):

1. Use the **status synchronization** command to determine whether synchronization is enabled and to determine the on-line reference. If the on-line reference is a tone-clock board, the switch is operating in free run mode. If the Stratum 3 is displayed, and no DS1s are connected to the Stratum 3 clock or no DS1 connection existed to the Stratum 3 clock for over 24 hours, then the Stratum 3 clock is in free run mode.
2. Check for slip errors against DS1-BD and UDS1-BD.
3. If Stratum 3 is administered (**display synchronization**) and on-line (**status synchronization**), check for DS1-BD or UDS1-BD slip errors for the DS1(s) or UDS1(s) used as input to the Stratum 3 clock. Check the LED indications on the Stratum 3 clock to determine which DS1 is providing input to the Stratum 3 and examine the cross connect information for that DS1.
4. Check for slips errors against EXP-INTF, SNI-BD, and TDM-CLK.
5. Check **status synchronization** for the current DS1 reference. If a DS1 or UDS1 is on-line, check for slips on that DS1 or UDS1. If Stratum 3 synchronization is administered and the Stratum 3 clock is used as the

reference (i.e. the tone-clock local oscillator is not on-line), follow the procedure in step 3 to determine the DS1 reference used as input to the Stratum 3 clock and check for slips on that reference.

6. Check for LOS, Blue, Yellow, and Red Alarms on the on-line reference facility and fix those problems first. See the DS1-BD and/or UDS1-BD for the error log entries associated with the above mentioned alarms. Replace the circuit packs one at a time and wait at least one hour to determine if the problem has gone away. This procedure is disruptive and should be done after hours if possible. An alternative to replacing the tone-clock circuit pack in systems where the tone-clocks are duplicated, is to run the **set tone-clock** command to switch tone-clocks. If the problem goes away, the previously active tone-clock should be replaced.

7. If a few facilities are experiencing slips or are unusable references, the clock source for facilities with slips or that are unusable is not traceable to the same ultimate source as the clock source for the on-line reference facility.

   Examine the overall timing network for the interconnected DS-1 to determine if the clock can be traced back to a single source and if the reference designations for each location in the distribution of timing is supplied in accordance with the *synchronization plan* for the customer. Examine the capability of the external transmission equipment to pass or provide timing.

   Verify the integrity of the on-site hardware by using the *Facility Fault Sectionalization* section, which loops the transmit signal to the receive signal and verifies that the excessive slips or the unusable reference are no longer observed.

   This is a time consuming process that disrupts service. You should perform it after hours if the service being provided by the system is acceptable as determined by checking with the customer.

8. Use **status synchronization** to determine the on-line reference. If a DS1 or Stratum 3 reference is not on-line and the local oscillator of a tone-clock board is on-line, then the answer to this question is "no".

9. Use **display synchronization** to find out what references, if any, are administered. Use **status synchronization** to find out whether synchronization is enabled.

10. If tone-clocks are duplicated, the **set tone-clock** command can be used to switch tone-clocks. If slips go away, then replace the tone-clock that was just switched away from.

11. Use **status pnc** to determine which PNC is active. Then use **list fiber-links** to determine the EIs on the active PNC and the EIs associated with the slave PN. If the switch does not have PNC duplication, the EIs are all on the active PNC, A-PNC. A PNC interchange can be done via **reset pnc interchange** before replacing EIs if the system has PNC duplication. If the slips go away after the PNC interchange, replace the EIs that were previously active.

12. Replace the circuit packs one at a time and wait at least one hour to determine if the problem has gone away. This procedure is disruptive and should be done after hours if possible.

    An alternative to replacing the EI and SNI in systems where the PNC is duplicated, is to perform a PNC interchange via **reset pnc interchange**. If the problem goes away, either the EI or the SNI on the previously active PNC should be replaced. Replace one at a time and make that PNC active again to determine whether the problem is fixed.

    An alternative to replacing the tone-clock circuit pack in systems where the tone-clocks are duplicated, is to run the **set tone-clock** command to switch tone-clocks. If the problem goes away, the previously active tone-clock should be replaced.

    Also, before replacing an SNC circuit pack, the **set switch-node-clock** command can be used if SNCs are duplicated in the carrier. If the problem goes away, the previously active SNC should be replaced.

13. Replace the circuit packs one at a time and wait at least one hour to determine if the problem has gone away. This procedure is disruptive and should be done after hours if possible.

    An alternative to replacing the EI and SNI in systems where the PNC is duplicated, is to perform a PNC interchange via **reset pnc interchange**. If the problem goes away, either the EI or the SNI on the previously active PNC should be replaced. Replace one at a time and make that PNC active again to determine whether the problem is fixed.

    An alternative to replacing the tone-clock circuit pack in systems where the tone-clocks are duplicated, is to run the **set tone-clock** command to switch tone-clocks. If the problem goes away, the previously active tone-clock should be replaced.

    Also, before replacing an SNC circuit pack, the **set switch-node-clock** command can be used if SNCs are duplicated in the carrier. If the problem goes away, the previously active SNC should be replaced.

Facility Fault Sectionalization

DS-1 facility fault sectionalization involves looping around the DS-1 signal at on-site access points to localize the source of the problem to equipment and wiring on either the near side or far side of the loop-around point.

WARNING:
The facility fault sectionalization technique disrupts service. When you perform the looparound on a facility, make sure it is not the on-line synchronization reference or a system outage will occur.

When you use this technique to investigate problems on facilities with multiplex or DACS equipment, the technique becomes cumbersome because all of the 64

Kbps (B-channels) or subrate channels corresponding to the DS-1 facility need to be looped around.

Figure 9-113 shows a sequence of units (1 though n) that may be connected as the on-site equipment. A typical example is the case where the only on-site equipment is channel-terminating equipment designated Unit #1. A more complex, less typical example might have a DACS as Unit #1, a protection switch as Unit #2, and a DS-1-level microwave radio system as Unit #3.

The *Facility Fault Sectionalization* flowchart (Figure 9-114 on page S-292)gives an overview of the facility fault sectionalization technique. It is important that you know the configuration and wiring of the equipment for the problem facility in order to support this technique.

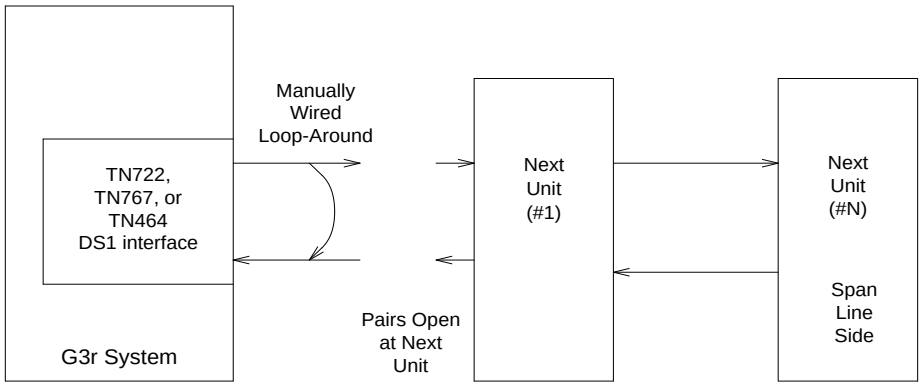

Figure 9-113. Manual Looparound for Facility Fault Sectionalization

Since the technique is time consuming, fix any DS1-BD, UDS1-BD, STRAT-3, or SYNC errors first that are not slip errors.

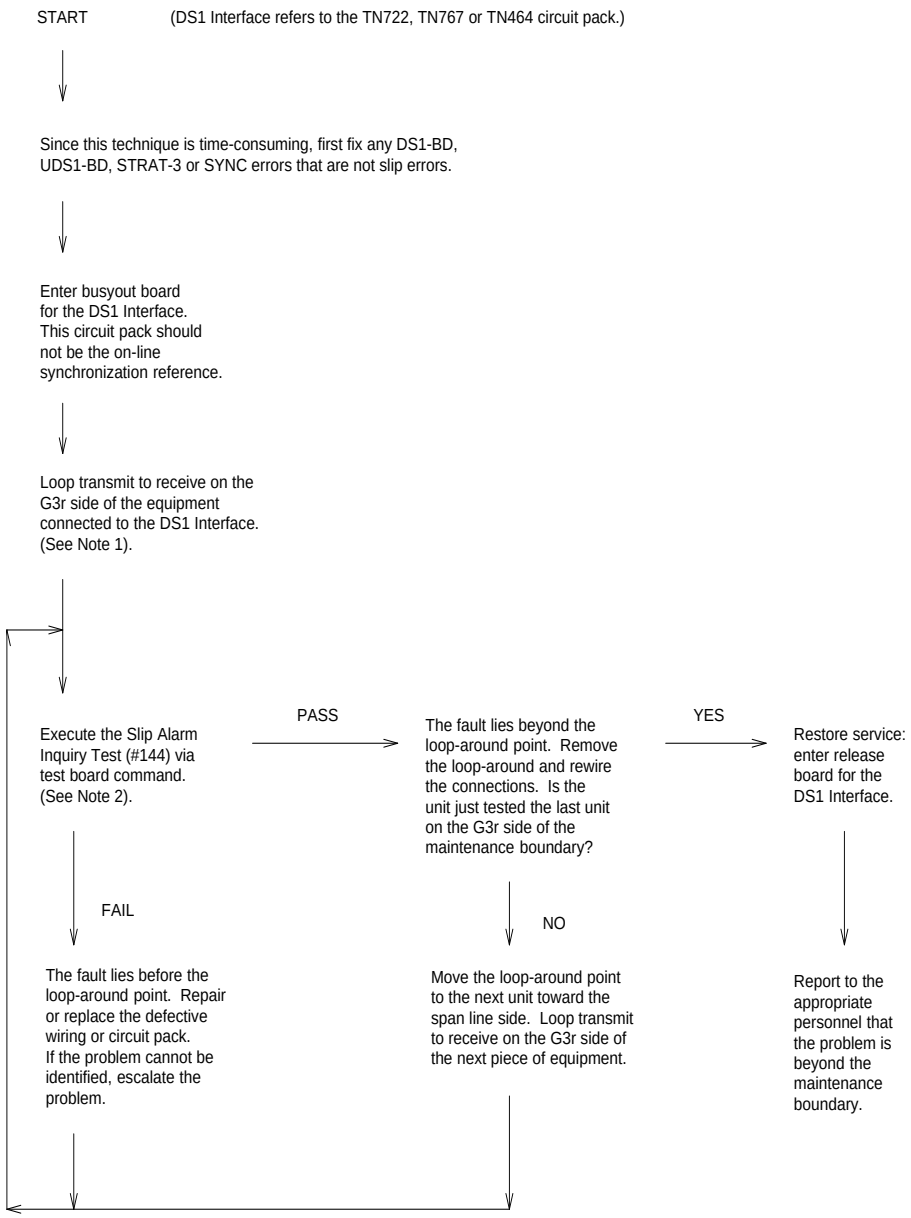

Figure 9-114. Facility Fault Sectionalization Flowchart

Notes to Facility Fault Sectionalization Flowchart

1. Loop transmit to receive on the system side.

Remove the transmit signal from the TN722, TN767, or TN464 circuit pack inputs and outputs and loop it around to the receive signal going toward the TN722, TN767, or TN464 circuit pack at the first unit wired to the TN722, TN767, or TN464 circuit pack. (See Figure 9-113 on page S-291).

The looparound signal may take different forms depending on the installation.

- In some cases, the unit connected to the system may provide a switch or a terminal interface to control the desired looparound. Make sure that the signal is looped toward the system and that the timing signal is looped.
- In most cases, it may be necessary to temporarily rewire connections at the cross-connect fields to loop the signal back toward the switch.

The point at which the signal is looped should be one at which physical access is easy and where the signal level is within the line compensation (i.e. equalization) range of the hardware connected. A few cases exist where access to the looparound cannot be easily provided at locations where the signal level is within the line compensation range of the hardware. The line compensation can be changed via the **change ds1 UUCSS** command.

2. Execute the **test board UUCSS** command for the TN722, TN767 or TN464. Look at results of Test #144, the Slip Alarm Inquiry Test. When this test fails, the error code gives the number of slips detected since the last Slip Inquiry Test was run. If the test fails, run it at least one more time to ensure that slips have occurred since the looparound was installed.

Timing Loops

A timing loop exists whenever a system receives timing from another system whose timing reference is directly or indirectly derived from itself. The system synchronization planner *must avoid creating a timing loop* when administering the synchronization references in a system. Timing loops can lead to loss of digital data between systems that are exchanging data with any system within the loop. An invalid timing signal will also be generated by any system within the loop, thus propagating the invalid timing signal to any system(s) using a system within the loop as a synchronization reference. Figure 9-115 shows a timing loop and a correct distribution of timing between the systems.

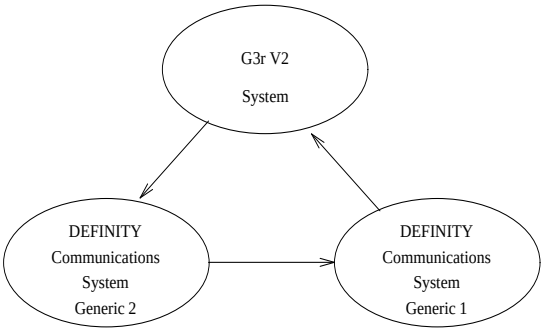

TIMING LOOP

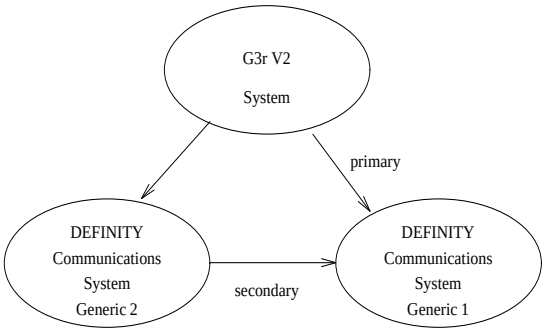

CORRECT TIMING DISTRIBUTION

NOTE:

Synchronization Reference

Figure 9-115. Synchronization Timing Loop and Correct Timing Distribution

A correctly designed network has no loops and each piece of equipment in the network is supplied by a clock of equal or lower stratum (i.e.,: the inputs to a Stratum 3 clock should NEVER be from a Stratum 4 device). *Synchronization administration changes should never be done without consulting the overall*

synchronization plan for the network. If you suspect that synchronization administration changes are needed, follow normal escalation procedures.

Synchronization Switches Away from the Current Timing Reference

Synchronization will switch away from a DS1 reference (primary or secondary) if the current DS1 reference is not providing a valid timing signal. The other DS1 reference will be used if one is administered and providing a valid timing signal. Otherwise, the local oscillator of the Tone-Clock circuit pack in the same port network as the DS1 reference will be used. The following conditions will cause a synchronization switch:

- The current DS1 reference is not inserted (i.e. **list configuration board UUCSS** shows "no board").
- The current DS1 reference has a loss of signal error (DS1-BD and UDS1-BD error type 1281), a blue alarm error (DS1-BD and UDS1-BD error type 1793), a red alarm error (DS1-BD and UDS1-BD error type 2049), or a hyperactive angel error (DS1-BD and UDS1-BD error type 1538). A corresponding alarm log entry is not required.
- DS1 and UDS1 circuit packs can be administered with slips detection enabled via the **Slip Detection?** field set to a **y** (see the **add ds1**, **change ds1**, and **display ds1** commands). When over half of the DS1 and UDS1 circuit packs administered as slip enabled are experiencing slips, and the primary or secondary synchronization reference is the current synchronization reference, synchronization will try the other administered synchronization reference if the other administered reference does not have the above two conditions. The **list measurements ds1-log** command can be used to get an historical perspective of DS1 facility operation.

The following conditions will cause a switch to the other DS1 reference if one exists and the other DS1 reference is more healthy:

- The current DS1 reference has a misframe error (DS1-BD error type 3329 to 3345 or UDS1-BD error type 3585-3601). A corresponding alarm log entry is not required.
- The current DS1 reference has a slip alarm (DS1-BD and UDS1-BD error type 3073 to 3160). A corresponding alarm log entry is required.

If the above conditions are repaired and no longer apply, synchronization will switch back to the primary reference.

Tone-Clock Circuit Pack LEDs

The yellow and green LEDs of the TN768 and TN780 Tone-Clock circuit packs flash in a specific pattern to indicate the status of the circuit pack. For example, these flashing LED patterns are used to indicate if a Tone-Clock circuit pack is deriving timing from an external source or whether the Tone-Clock circuit pack is providing the timing signal for the port network.

The yellow and green LED patterns for the TN768 and TN780 Tone-Clock circuit pack are as follows:

Tone-Clock Yellow/Green LED Flashing Codes

Circuit Pack Condition	Tone-Clock State	Explanation
(a) flashing yellow 2.7 seconds on .3 seconds off	active	This light pattern indicates that an external timing source is being used as a synchronization reference.
flashing yellow .3 seconds on 2.7 seconds off	active	This light pattern indicates that the circuit pack is being used as a synchronization reference.
steady yellow on	active	This light pattern indicates that the light has been reset but has not been told which synchronization reference source to use.
steady yellow off	standby	This light pattern indicates that the circuit pack is in standby mode (neither generating tones nor supplying clocks).
"jingle bells" green and yellow .1 seconds on, .2 seconds off, .1 seconds on, .4 seconds off, .4 seconds on, .4 seconds off,	standby	The system is running maintenance tests on the standby circuit pack. (the standby Tone-Clock circuit pack is providing tones.)
other green and yellow	active	The system is running maintenance tests on the active circuit pack

Notes:

a. The external synchronization reference being used is a primary reference, a secondary reference, or the external stratum 3 clock when the Tone-Clock is in the master port network. The external synchronization reference used in a slave port network is the Expansion Interface circuit pack.

Hardware Error Log Entries and Test to Clear Values

Synchronization Maintenance Error Log Entries					
Error Type	**Aux Data**	**Associated Test**	**Alarm Level**	**On/Off Board**	**Test to Clear Value**
0*	0	Any	Any	Any	test synchronization
1(a)*		None	WARNING/MINOR(h)	OFF	None
18(b)	0	disable sync	WARNING	OFF	enable sync
257(c)*		None	WARNING/MINOR(h)	OFF	None
513(d)*		None	WARNING/MAJOR(h)	OFF	None
769(e)		None	MAJOR	OFF	None
1793(f)†	0-50	None	MAJOR	OFF	None
2049(g)†	0	None	WARNING	OFF	None

* Run the Short Test Sequence first. If all tests pass, run the Long Test Sequence. Refer to the appropriate test description and follow the recommended procedures.

† It may take up to 1 hour for these alarms to clear via the ‘‘leaky bucket’’ strategy.

Notes:

a. This error indicates a problem with the primary DS1 reference. It will be cleared when the primary reference is restored. The following steps should give an indication of the source of the problem:

   1. Check if the primary DS1 interface circuit pack is inserted in the carrier via the **list configuration board UUCSS** command.
   2. Verify that the administered primary reference matches the DS1 reference from the network synchronization plan.
   3. Test the primary DS1 interface circuit pack via the **test board UUCSS long** command. Check the Error Log for DS1-BD or UDS1-BD errors and refer to the DS1-BD or UDS1-BD (DS1 Interface Circuit Pack or UDS1 Interface Circuit Pack) Maintenance documentation to resolve any errors associated with the primary DS1 (DS1 or UDS1) interface circuit pack. If the only errors against DS1-BD or UDS1-BD are slip errors, then follow the procedures described in the troubleshooting section above. If no errors are listed in the Error Log for the primary DS1 interface circuit pack, continue with the following steps.

4. Test the active Tone-Clock circuit pack in the master port network via the **test tone-clock UUC long** command. Check the Error Log for TDM-CLK errors and verify that TDM Bus Clock Test #148 (TDM Bus Clock Circuit Status Inquiry test) passes successfully. If Test #148 fails with an Error Code 2 through 32, refer to the TDM-CLK (TDM Bus Clock) Maintenance documentation to resolve the problem. If not, continue with the following steps.
5. Execute the **disable synchronization-switch** and then the **enable synchronization-switch** commands. These two commands (when executed together) will switch the system synchronization reference to the primary DS1 interface circuit pack. Check the Error Log and execute the **status synchronization** command to verify that the primary DS1 interface circuit pack is still the system synchronization reference. If the primary DS1 interface circuit pack is not the system synchronization reference, and the master port network does not have duplicate Tone-Clock circuit packs, escalate the problem. If not, continue with the following step.
6. *Duplicated Tone-Clock circuit packs in the master port network:* Switch Tone-Clock circuit packs on the master port network via the **set tone-clock UUC** command, and repeat the disable/enable commands described in the previous step. If the problem still persists, follow normal escalation procedures.

   Switch Tone-Clock circuit packs on the master port network via the **set tone-clock UUC** command, and repeat the disable/enable commands described in the previous step. If the problem still persists, follow normal escalation procedures.

b. This error indicates that Synchronization Maintenance has been disabled via the **disable synchronization-switch** command. Execute the **enable synchronization-switch** command to enable Synchronization Maintenance reference switching and to resolve this alarm.

c. This error indicates a problem with the secondary DS1 reference. It will be cleared when the secondary reference is restored. Refer to note (a) to resolve this error substituting **secondary** for **primary** in the preceding resolution steps.

d. This error indicates that the Tone-Clock circuit pack is providing the timing source for the system. The primary and secondary (if administered) are not providing a valid timing signal. Investigate errors 1 and 257 to resolve this error.

e. This error indicates that the external Stratum 3 Clock fails to provide the system timing reference. Refer to Stratum 3 Clock Maintenance document to resolve the defective synchronization reference.

f. This error indicates excessive switching of system synchronization references has occurred. When this error occurs, synchronization is disabled and the Tone-Clock circuit pack (in the master port network) becomes the synchronization reference for the system. Execute the following steps to resolve this error:

1. Check for timing loops and resolve any loops that exist.
2. Test the active Tone-Clock circuit pack in the master port network via the **test tone-clock UUC long** command. Check the Error Log for TDM-CLK errors and verify that TDM Bus Clock Test #148 (TDM Bus Clock Circuit Status Inquiry test) passes successfully. If Test #148 fails with an Error Code 2 through 32, refer to the TDM-CLK (TDM Bus Clock) Maintenance documentation to resolve the problem. If not, continue with the following steps.
3. *Duplicated Tone-Clock circuit packs in the master port network:* Switch Tone-Clock circuit packs on the master port network via the **set tone-clock UUC** command.

   Switch Tone-Clock circuit packs on the master port network via the **set tone-clock UUC** command.

   For simplex Tone-Clock circuit packs in the master port network: If this is not a Stratum 3 system, replace the primary and secondary (if administered) DS1 Interface circuit packs.
4. Investigate any other SYNC or STRAT-3 errors.
5. If the problem still persists, escalate the problem.

g. This error indicates that the Expansion Interface circuit packs are experiencing timing slips. This error will increase the bit error rates for data transmission between port networks. The Expansion Interface circuit packs with timing slips have EXP-INTF error 2305.

   1. Check the LEDs on the active Tone-Clock circuit packs in the system and verify that the system is properly synchronized.
   2. Verify that all the TDM/LAN Bus cables on the backplane are marked WP-91716. Also, check that the bus terminators are the ZAHF4 TDM/LAN Bus Terminator type.
   3. Check for timing loops, and resolve any loops that exist.
   4. Check the Error Log for any active as well as resolved Expansion Interface circuit pack errors and refer to EXP-INTF (Expansion Interface Circuit Pack) Maintenance documentation to resolve any errors found.
   5. *Duplicated Tone-Clock circuit packs in the slave port networks:*
      - Switch Tone-Clock circuit packs in the slave port networks where EXP-INTF error 2305 also occurs via the **set tone-clock UUC** system technician command. The error count for this particular error should start decrementing once the problem is solved—if the count does not decrease in 15 minutes the problem still persists.
      - If the problem still persists, switch the Tone-Clock in the slave port network back to the previous configuration. Then, perform a PNC interchange via the **reset pnc interchange** command.

- If the problem still persists, switch the PNC back to the previous configuration via the **reset pnc interchange** command. Then, switch the Tone-Clock circuit packs in the master port network via **set tone-clock UUC**.
- If the problem still persists, switch the Tone-Clock circuit packs in the master port network back to the previous configuration via **set tone-clock UUC**.
- Replace the active Expansion Interface circuit pack in the master port network.
- In a CSS configuration, replace the Switch Node Interface circuit pack connected to the active Expansion Interface circuit pack in the master port network. The **list fiber-link** command can be used to determine the Switch Node Interface circuit pack that is connected to the active Expansion Interface circuit pack in the master port network.
- If the system synchronization reference is a Tone-Clock circuit pack or the Stratum 3 Clock, follow normal escalation procedures. If the system synchronization reference is a DS1 interface circuit pack, administer a different DS1 interface circuit pack as the primary synchronization reference. If the problem still is not resolved and any slip errors remain, follow the procedures described in the troubleshooting section above. Otherwise, follow normal escalation procedures.

6. *Simplex Tone-Clock circuit packs in the slave port networks:*

- Switch the Tone-Clock circuit packs in the master port network via **set tone-clock UUC**.
- If the problem still persists, switch the Tone-Clock circuit packs in the master port network back to the previous configuration via **set tone-clock UUC**. Test the Tone-Clock circuit packs in the master and slave port networks via the **test tone-clock UUC long** command. Check the Error Log for TDM-CLK errors and verify that TDM Bus Clock Test #148 (TDM Bus Clock Circuit Status Inquiry test) passes successfully. If Test #148 fails with an Error Code 2 through 32, refer to TDM-CLK (TDM Bus Clock) Maintenance documentation to resolve the problem. If not, continue with the following steps.
- If the master and slave Tone-Clock circuit packs *do not* fail TDM Bus Clock Test #150 (TDM Bus Clock PPM Inquiry test), replace the Expansion Interface circuit packs that have EXP-INTF error 2305.

- If the system synchronization reference is a Tone-Clock circuit pack and the master Tone-Clock circuit pack fails TDM Bus Clock Test #150, follow the steps listed in TDM-CLK (TDM Bus Clock) Maintenance documentation to replace the master Tone-Clock circuit pack.
- If the system synchronization reference is a DS1 interface circuit pack and the master Tone-Clock circuit pack fails TDM Bus Clock Test #150, the primary or secondary (if administered) synchronization references are not providing valid timing signals for the system. Check the system synchronization references administered, and follow the steps outlined in note (a) if the primary synchronization reference is providing timing for the system or note (c) if the secondary synchronization reference is providing timing for the system.
- If the slave Tone-Clock circuit pack fails TDM Bus Clock Test #150 but the master Tone-Clock *does not* fail this test, the master Tone-Clock circuit pack must be replaced. Follow the Tone-Clock replacement steps listed in the TDM-CLK (TDM Bus Clock) Maintenance documentation.
- Replace the active Expansion Interface circuit pack in the master port network.
- In a CSS configuration, replace the Switch Node Interface circuit pack connected to the active Expansion Interface circuit pack in the master port network. The **list fiber-link** command can be used to determine the Switch Node Interface circuit pack that is connected to the active Expansion Interface circuit pack in the master port network.
- If the problem still is not resolved and any slip errors remain, follow the procedures described in the troubleshooting section above. Otherwise, follow normal escalation procedures.

This error is cleared by a leaky bucket strategy and takes one hour to clear (leak away) the error counter once it is alarmed. Therefore, it may take up to one hour to clear the alarm after the problem is cleared.

h. Noise on the DS1 line can cause transient alarms on synchronization. Therefore, when a sync problem occurs on error types 1, 257, or 513, a WARNING alarm is first raised for 15 to 20 minutes before the alarm is upgraded to a MINOR or MAJOR alarm.

System Technician-Demanded Tests: Descriptions and Error Codes

Always investigate tests in the order presented in the table below when inspecting errors in the system.

If Stratum 3 is administered via **change synchronization**, the Stratum 3 Clock Alarm Query test (test #649) will also execute when the **test synchronization** command is run. Test 649 is described in the STRAT-3 section.

Order of Investigation	Short Test Sequence	Long Test Sequence	D/ND*
Test Synchronization Test (#417)	X	X	ND

Test Synchronization Test (#417)

This test updates all the Synchronization Maintenance component circuit packs with the correct information regarding their role in providing synchronization for the system. All the Tone-Clock, Expansion Interface, DS1 Interface and UDS1 Interface circuit packs in the system are updated via this test. This test will always pass without an error.

Table 9-352. TEST #417 Test Synchronization Test

Error Code	Test Result	Description/ Recommendation
1000	ABORT	System resources required to run this test are not available. 1. Retry the command at 1 minute intervals a maximum of 3 times. 2. If the test continues to abort, follow normal escalation procedures.
1115	ABORT	Could not allocate the necessary system resources to run this test. 1. Retry the command at 1 minute intervals a maximum of 3 times. 2. If the test continues to abort, follow normal escalation procedures.
2500	ABORT	Internal System Error 1. Retry the command at 1 minute intervals a maximum of 3 times. 2. If the test continues to abort, follow normal escalation procedures.
	PASS	The Synchronization Maintenance component circuit pack parameters have been successfully updated. The system should be synchronized after successful execution of this test. If synchronization problems still exist, refer to the Error Log to obtain information regarding the source of the problem.

SYS-LINK (System Links)

MO Name As It Appears in Alarm Log	Alarm Level	Initial System Technician Command to Run	Full Name of MO
SYS-LINK	MINOR	test sys-link UUCSSpp	SYSTEM LINKS
SYS-LINK	WARNING	test sys-link UUCSSpp	SYSTEM LINKS

System Links are packet links that originate at the Packet Interface board and traverse various hardware components to specific endpoints. The hardware components involved on the forward and reverse routes can be different, depending upon the configuration and switch administration. Various types of links are defined by their endpoints:

EAL	Expansion Archangel Link terminating at an Expansion Interface board
INL	Indirect Neighbor Link terminating at a Switch Node Interface board
PGC	Packet Gateway Call-Control Link terminating at a Packet Gateway board
PRI	ISDN PRI D-Channel Link terminating at a Universal DS1 board
SAP	System (Access) Port Link terminating at a Packet Data port
X.25	BX.25 Link terminating at a Packet Gateway port

Recording System Link Events

The system links maintenance object is used to record all errors encountered on the links. Most of these events are not extra-ordinary, unless they occur with an alarming frequency. The events are logged as they occur, so as to leave a trail helping analyze abnormal behavior exhibited by the endpoints attached to the links or the links themselves.

When a link goes down, an alarm is raised immediately. For EAL, and INL link types, a MINOR alarm is raised while a WARNING alarm is raised for the rest of the link types. Other alarming conditions which do not cause the link to go down get a WARNING alarm regardless of the link type.

Identifying a System Link

In order to trace problems associated with a system link, it is necessary to find its location. The following methods can be used to find the location of the system link:

In case of the X.25 link type, a single endpoint carries multiple links. A combination of the endpoint and channel number is used to uniquely identify the link. All other links can be uniquely identified by their endpoints.

Display Errors/Alarms

The output of the **display errors** or **display alarm** commands shows the location of the system link for entries with a Maintenance Name of SYS-LINK. You can restrict the scope of the output of these commands by specifying category **sys-link** on the input form. The link type and channel number, if any, are listed under the Alt Name field.

List sys-link

The command **list sys-link** lists all system links present in the system. The location of the system link, the link type, and channel number are displayed for each link.

Common Procedure for Repairing Link Problems

The state of a system link is dependent on the state of the various hardware components that it travels over. To resolve any problems associated with a system link, use the following procedure.

The switch maintains a list of hardware components over which the link travels called the hardware path. There are two hardware paths, the current hardware path and the faulted hardware path for each of the system links. The current hardware path is present only for those links that are currently up. When a link is down, the current hardware path is empty. The faulted hardware path, is always present once the link has gone down and is *not cleared when the link subsequently recovers.* The faulted path preserves the path that the link traversed when it last went down. The time at which the faulted path was last recorded is preserved and is accessible via the **status sys-link** location and **list sys-link** commands. Therefore, the focus of attention for problems which do not involve a link that is down, is the current hardware path. If the link is down, faulted hardware path is the focus of attention.

The command **status sys-link** location will present the state of both the hardware paths (current and faulted) along with the state of each of the components in the hardware path. When analyzing any system link problem, look for alarms on the components listed under desired hardware path. If any alarms are present, then follow the maintenance procedures for the alarmed components to clear those alarms first.

When all the components are alarm free, wait for 3 minutes to allow the links to recover. Test the system link via **test sys-link UUCSSpp long clear** and notice any tests that fail. If any failures are found, fix the problems indicated by the tests and repeat the procedure.

Hardware Error Log Entries and Test to Clear Values

Maintenance Error Log Entries					
Error Type	**Aux Data**	**Associated Test**	**Alarm Level**	**On/Off Board**	**Test to Clear Value**
13 (a)		System Link Status (985)	MINOR/ WARNING	OFF	
257 (b)			WARNING	OFF	test sys-link UUCSSpp l cl
513 (c)			WARNING	OFF	test sys-link UUCSSpp l cl
772 (d)			WARNING	OFF	test sys-link UUCSSpp l cl
1025 (e)			WARNING	OFF	test sys-link UUCSSpp l cl
1281 (f)			WARNING	OFF	test sys-link UUCSSpp l cl
1537 (g)			WARNING	OFF	test sys-link UUCSSpp l cl
1793 (h)			WARNING	OFF	test sys-link UUCSSpp l cl

Notes:

a. This error indicates that the link went down. The link may have gone down or never come up. Enter command **status sys-link location** and check the value of the field "Faulted Path". If the value is "default", then the link never came up. If the value is "present", then the link came up and went down.

   Follow the Common Procedure described above. Wait for 3 min before checking the link state. Repeat the procedure till there are no problems with the components. If the link is still down, escalate the problem.

b. This error indicates that the link has experienced uplink flow control. Manifest effect of this error is that the end-point may be hyperactive. The system link is alarmed if 4 or more errors of this type are detected within 10 min.

   To correct the problem, follow the Common Procedure described above. Clear errors and wait for 10 min. If the errors appear again, escalate the problem.

c. This error indicates that the link has experienced downlink flow control. Manifest effect of this error is that some information packets from the packet interface board have been lost. The link is reset on first occurrence, hence, error 1025 will also be logged. The system link is alarmed if 2 or more errors of this type are detected within 10 min.

   To correct the problem, follow the Common Procedure described above. Clear errors and wait for 10 min. If the errors appear again, escalate the problem.

d. This error indicates that the link experienced a temporary disconnect due to excessive resets or state transitions. Manifest effect of this error is that the link is taken down and then brought up again. The system link is alarmed if 2 or more errors of this type are detected within 10 min.

   To correct the problem, follow the Common Procedure described above. Clear errors and wait for 10 min. If the errors appear again, escalate the problem.

e. This error indicates that the link has been reset. Manifest effect of this error is that information packets queued at the time of reset are been lost. The system link is alarmed if 20 or more errors of this type are detected within 10 min.

   To correct the problem, follow the Common Procedure described above. Clear errors and wait for 10 min. If the errors appear again, escalate the problem.

f. This error indicates that the link has experienced slow transmit rate due to remote endpoint being busy. Manifest effect of this error is that the end-point location may experience slower throughput rate and/or noisy transmission. The system link is alarmed if 4 or more errors of this type are detected within 10 min.

   To correct the problem, ensure that the remote endpoint is functioning properly. If the problem persists, follow the Common Procedure described above. Clear errors and wait for 10 min. If the errors appear again, escalate the problem.

g. This error indicates that the link has experienced slow transmit rate due to excessive retransmission. Possible causes for this error may be that the switch is overrunning the end-point or that the end-point is sick. Manifest effect of this error is that the end-point location may experience slower throughput rate. The system link is alarmed if 4 or more errors of this type are detected within 10 min.

   To correct the problem, follow the Common Procedure described above. Clear errors and wait for 10 min. If the errors appear again, escalate the problem.

h. This error indicates that the link has experienced slow transmit rate due to unknown causes. Manifest effect of this error is that the end-point location may experience slower throughput rate and the Packet Interface may experience backup or congestion. The system link is alarmed if 4 or more errors of this type are detected within 10 min.

   To correct the problem, follow the Common Procedure described above. Clear errors and wait for 10 min. If the errors appear again, escalate the problem.

System Technician-Demanded Tests: Descriptions and Error Codes

Testing for system links is different from the standard test procedures for maintenance objects. In addition to testing the system link maintenance object, the user is allowed to test all the components in the path of the system link. There are two paths preserved for the link. The current path, if present, represents the path traversed by the link currently. This path will not be present when the link is down. The other path, the faulted path is present if the link has ever gone down or never come up. If the link came up and went down, then the faulted path is marked "Present". If the link never came up, the faulted path is marked "Default". Either case, it represents the path on which the link was attempted or established unsuccessfully.

Test command for the system links, **test sys-link UUCSSpp** can be specified with current or faulted as an optional argument if the user wishes to test all the components in the specified path. The tests executed will be the same if the user were to test each component manually. In the event that the user does not specify any path, then only the tests specified for the system links are executed.

Order of Investigation	ShortTest Sequence	LongTest Sequence	D/ND*
System Link Status (#985)	X	X	N

* D = Destructive; ND = Nondestructive

System Link Status (#985)

This test queries the switch for the status of the system link and verifies that all switch components have the same view of the link state.

This test is non-destructive

Table 9-353. TEST #985 System Link Status

Error Code	Test Result	Description/ Recommendation
1007	ABORT	Could not locate the system link associated with this location 1. Retry the command at 1 minute intervals for a maximum of 5 times. 2. If the test continues to abort, escalate the problem.
2500	ABORT	Internal system error 1. Retry the command at 1 minute intervals for a maximum of 5 times. 2. If the test continues to abort, escalate the problem.
6	FAIL	The system link is down. 1. Follow the procedure for error type 13.
	PASS	The system link is up.

SYS-PRNT (System Printer)

MO Name As It Appears in Alarm Log	Alarm Level	Initial System Technician Command to Run	Full Name of MO
SYS-PRNT	MINOR	test sp-link l	System Printer
SYS-PRNT	WARNING	release sp-link	System Printer

The Report Scheduler feature provides the capability to schedule printing of output form selected administration commands on an asynchronous System Printer (SYS-PRNT) or a Personal Computer (PC). The System Printer device connects to the system via a data module (PDM, MPDM, DTDM) connected to a port on a TN754 Digital Line circuit pack which is administered as a data extension. A System Printer device can also be connected through an ADU to a port on TN726B Data Line circuit pack. The System Printer link to the processor is via a system port. A system port is comprised of a port on the TN726B Data Line circuit pack and a port on the TN553 Packet Data circuit pack connected to each other in a null-modem fashion. Refer to the PDATA-PT section for information on the system port connectivity.

System Printer Link Maintenance provides a strategy for maintaining the link between the system and an external SYS-PRNT output device. The strategy includes a set of tests for detection of errors during normal operation, troubleshooting actions, and alarms for serious problems. System Printer Link Maintenance uses a try-and-wait mechanism for maintaining the SYS-PRNT link. A minor alarm is raised when the link set-up fails. A warning alarm is raised when the SPE has been busied out. A maximum of two link retry attempts is made. After the second attempt, set-up attempts are only made by the application software. (The 15-minute timer fires and jobs are printed unless an immediate job was entered.) After two unsuccessful attempts to establish the link, a MINOR alarm is raised. If the System Printer Link is torn down due to an error, System Printer Link Maintenance will raise a MINOR alarm but will not attempt to bring up the System Printer Link.

System Printer Link Maintenance does not cover the elements comprising the SYS-PRNT physical link: the external SYS-PRNT output device, the Data Module (PDM/MPDM/DTDM) and TN754 Digital Line, or the ADU and TN726B Data Line. If System Printer Link Maintenance cannot restore the System Printer Link, the maintenance tests of these individual components of the System Printer Link must be executed to diagnose faults.

Procedures for Restoring the System Printer Link

The following procedure should be followed to restore the System Printer Link:

1. Determine the status of the System Printer Link via the **status sp-link** command. Verify that the System Printer Link is not busied out for maintenance. This is indicated by a `no` in the `Maintenance Busy?` field. If the System Printer Link has been busied out, issue the **release sp-link** command. If the link is `down`, proceed to Step 2.
2. Issue the **display system feature** command to determine the location of the System Printer Link.

   Enter the **status data-module <extension>** command and verify that the data extension is in-service/idle. If the data extension is *not* available, refer to the `Port` field. Look for errors and/or alarms on the circuit pack with which this extension is associated. Follow repair instructions for the appropriate MO. Continue with Step 3.
3. Verify the availability of the external SYS-PRNT output device. Make sure that the SYS-PRNT output device is *on-line* and ready-for-service. Check the physical connectivity between the Data Module and the SYS-PRNT output device.
4. Verify that there is at least one system port available. The System Printer Link can not be established unless there is a system port available. Refer to the PDATA-PT Maintenance Service Description for more information on system ports.
5. If the problem is not found in the above steps, check the system port for any problems. Refer to the PDATA-PT section for description about system port and its connectivity.
6. If the System Printer Link still cannot be restored, escalate the problem.

It should be noted that when restoring the System Printer link it is necessary to execute tests on different maintenance objects that comprise the System Printer link. It is recommended that you busy out the System Printer link before trying to restore the link. When the System Printer Link is busied out, all System Printer Link maintenance actions are deactivated, and interference with tests of other MOs is prevented.

Hardware Error Log Entries and Test to Clear Values

SYS-PRNT Maintenance Error Log Entries

Error Type	Aux Data	Associated Test	Alarm Level	On/Off Board	Test to Clear Value
0*	0	Any	Any	Any	test sp-link
18(a)	0	busyout sp-link	WARNING	OFF	release sp-link
257(b)	1, 3 4, 5, 6	Link Retry Test (#215)	MINOR/† WARNING	OFF	test sp-link l
513(c)	0	None	MINOR	OFF	test sp-link

† Minor alarms on this MO may be downgraded to Warning alarms based on the value used in the **set options** command.

Notes:

a. The System Printer Link has been busied out.

b. A failure was encountered while attempting to set up the System Printer Link. This attempt could have been initiated by either Report Scheduler software or by link maintenance during automatic link retry or as a result of a Link Retry Test (#215) request. The Aux Data field indicates the following:

1	No system port is available. Refer to PDATA-PT Maintenance Service Description for explanation on the system port.
3, 4	Time-out during setup attempt. Most likely due to problem with physical link or printer status.
5	Internal system error. Most likely temporary/sporadic failure.
6	The data module the printer is trying to use is busy with another call. Use the **Status data module** command to determine when the port is available for testing.

Refer to the preceding section ‘‘Procedures for Restoring the System Printer Link for recommended maintenance strategy.

c. The SYS-PRNT was interrupted for one of the following reasons:

- The cable to the SYS-PRNT output device is disconnected
- The SYS-PRNT output device is powered off
- The data extension to which the SYS-PRNT output device connects has been busied out
- Internal software error

Check the connectivity of the wires and cables among the wall jacket, data module, and SYS-PRNT output device. Follow the instructions provided in *Procedures for Restoring the System Printer Link* above.

System-Technician-Demanded Tests: Descriptions And Error Codes

When inspecting errors in the system and deciding which ones to address, always investigate errors in the order they are presented in the table below. By clearing error codes associated with the *Link Retry Test*, for example, you may also clear errors generated from other tests in the testing sequence.

Order of Investigation	Short Test Sequence	Long Test Sequence	D/ND*
Link Tear Down Test (#213)		X	D
Link Retry Test (#215)	X	X	ND

* D = Destructive; ND = Nondestructive

Link Tear Down Test (#213)

This test is destructive.

The Link Tear Down Test disconnects the existing link between DEFINITY Generic 3 and the external SYS-PRNT output device. If the link has been disconnected already, this test just returns PASS. All resources allocated for a System Printer Link are released after this test.

Table 9-354. TEST #213 Link Tear Down Test

Error Code	Test Result	Description/ Recommendation
40, 50	ABORT	Internal System Error. 1. Retry the command at one-minute intervals a maximum of two times. 2. If the test continues to abort, escalate the problem.
1010	ABORT	The System Printer Link has been busied out. 1. Enter the **release sp-link** command to release the System Printer Link from the busyout state. 2. Reissue the **test sp-link long** command to execute the test.
2012	ABORT	Internal System Error. 1. Retry the command at one-minute intervals a maximum of five times. 2. If the test continues to abort, escalate the problem.
	FAIL	Internal System Error. 1. Retry the command at one-minute intervals a maximum of two times. 2. If the test continues to abort, escalate the problem.
	PASS	The System Printer Link is torn down or a Short Test Sequence was executed and the link was not torn down.

Link Retry Test (#215)

This test sends a message to the System Printer management software process instructing it to make a data call to the extension connected to the printer. If the System Printer link is already up, this test passes without making any data call.

Table 9-355. TEST #215 Link Retry Test

Error Code	Test Result	Description/ Recommendation
10, 20	ABORT	Internal System Error. 1. Retry the command at one-minute intervals a maximum of two times. 2. If the test continues to abort, escalate the problem.
30	ABORT	Internal System Error. 1. Refer to the “Procedures for Restoring the System Printer Link’’ section for recommended maintenance strategy.
1010	ABORT	The System Printer Link has been busied out. 1. Enter the **release sp-link** command to release the System Printer Link from the busyout state. 2. Reissue the **test sp-link long** command to execute the test.
2012	ABORT	Internal System Error. 1. Retry the command at one-minute intervals a maximum of five times. 2. If the test continues to abort, escalate the problem.
	FAIL	The System Printer Link CANNOT be established. 1. Refer to the “Procedures for Restoring the System Printer Link’’ section for recommended maintenance strategy.
	PASS	The System Printer Link is up.

SYSAM (Circuit Pack)

MO Name As It Appears in Alarm Log	Alarm Level	Initial System Technician Command to Run	Full Name of MO
SYSAM	MAJOR(b)	test maintenance UUC l	System Access and Maintenance circuit pack
SYSAM	MINOR	test maintenance UUC s	System Access and Maintenance circuit pack
SYSAM	WARNING	test maintenance UUC s	System Access and Maintenance circuit pack

a. UU is the cabinet number (always 1, not required). C is the carrier designation (a or b). With simplex SPE the carrier location is not required. With duplicated SPEs, carrier a or b must be specified.

b. After a spontaneous SPE interchange has occurred, the Alarm Log retains for three hours a record of any MAJOR ON-BOARD alarm against an SPE component that took place before the interchange. If a spontaneous interchange has occurred (as indicated by STBY-SPE error type 103 or the **display initcauses** screen), and handshake is down, (check with **status spe**), replace the alarmed circuit pack on the standby SPE. If handshake is up, execute a **test long clear** of the alarmed circuit pack and follow recommended procedures.

The System Access and Maintenance (SYSAM) circuit pack, TN1648, is a required component of the SPE Complex. The SYSAM circuit pack is responsible for monitoring the sanity of the RISC Processor circuit pack, as well as environmental conditions. The SYSAM provides the serial interface for the G3-MT terminal and the communication interface to INADS or other service locations for alarm reporting and remote maintenance capability. The SYSAM also provides the Time-Of-Day Clock for the system.

In addition to the usual red, green, and red LEDs, the SYSAM circuit pack has alarm, acknowledgment and emergency transfer LEDs whose meanings are explained in Chapter 7, "LED Indicators". Indications given by these extra LEDs on a *standby* SYSAM (in a system with duplicated SPEs) are not meaningful. Pay attention to the extra LEDs on the *active* SYSAM only.

Hardware Error Log Entries and Test to Clear Values

SYSAM Error Log Entries

Error Type	Aux Data	Associated Test	Alarm Level	On/Off Board	Test to Clear Value
0*	0	Any	Any	Any	test processor UUC s r 1
1		SYSAM Reset Test	MAJOR†	ON	test maintenance UUC l r 1
150 (a)	Any	None	MAJOR†	ON	test maintenance UUC l c
257		Analog Loop Around Test (#917)	MINOR	ON	test maintenance UUC l r 3
513 (b)		G3-MT Loop Around Test (#915)	MINOR	ON	test maintenance UUC s r 3
769(c)	Any	Sanity Handshake Test	WARNING	OFF	test maintenance UUC s r 3
1025		Out-Pulse Relay Test (#916)	MINOR	OFF	test maintenance UUC l r 5
1281		Time of Day Clock Test	MAJOR†	ON	test maintenance UUC s r 3
1537		Sanity Handshake Test	MINOR	ON	test maintenance UUC s r 3
1793(d)	None		WARNING	ON	
2049		SYSAM Dual Port Ram Test	MAJOR†	ON	test maintenance UUC l r 1
2561 (e)		G3-MT Loop Around Test(#915)	MINOR	ON	test maintenance UUC s r 3

* Run the Short Test Sequence first. If all tests pass, run the Long Test Sequence. Refer to the appropriate test description and follow the recommended procedures.

† After a spontaneous SPE interchange has occurred, the Alarm Log retains for three hours a record of any MAJOR ON-BOARD alarm against an SPE component that took place before the interchange. If a spontaneous interchange has occurred (as indicated by STBY-SPE error type 103 or the **display initcauses** screen), and handshake is down, (check with **status spe**), replace the alarmed circuit pack on the standby SPE. If handshake is up, execute a **test long clear** of the alarmed circuit pack and follow recommended procedures.

Notes:

a. Error 150 indicates that a SPE interchange has occurred and that the SYSAM circuit pack was the cause of the spontaneous interchange.

   1. If other SYSAM errors are present, investigate these errors.
   2. If no other SYSAM errors are present, run the **test maintenance a|b long clear** command and investigate any test failures. If all tests pass, follow normal escalation procedures.

b. Error 513 indicates that the circuitry associated with active port on the SYSAM circuit pack is not functioning properly. This circuitry can only be tested when the SYSAM is in the active SPE.

c. Error 769 indicates that one of the following in-line errors has occurred:

   1. The "No Case" error indicates that the SYSAM firmware received a message that does not match any known message format.
   2. The "Background Fault" error indicates that one of the following SYSAM firmware background test failed: CPU Test, EPROM Checksum Test, RAM Test, or NVRAM Checksum Test.
   3. The "Logical Inconsistency" error indicates that the SYSAM firmware has determined that the SYSAM circuit pack is in a logically inconsistent state.

   These errors indicate that the SYSAM's sanity may be questionable. SYSAM software will run the Sanity Handshake Test in response to these errors. If these errors are reported repeatedly, SYSAM software will reset the SYSAM circuit pack via the SYSAM Reset Test.

d. Error 1793 indicates that the Sanity Timer Test initialization test failed on the last time the system rebooted. Routine Maintenance Procedures"). Replace the SYSAM circuit pack and verify that the Sanity Timer Test passes after replacing the circuit pack. To replace the SYSAM circuit pack, refer to "Replacing SPE Circuit Packs" in Chapter 5, "Responding to Alarms and Errors".

e. Error 2561 indicates that the standby G3-MT port on the standby SYSAM circuit pack is not functioning properly. Standby port circuitry on the active SYSAM is not tested.

System Technician-Demanded Tests: Descriptions and Error Codes

Always investigate tests in the order presented in the table below when inspecting errors in the system. By clearing error codes associated with the *SYSAM Reset Test*, for example, you may also clear errors generated from other tests in the testing sequence.

Order of Investigation	Short Test Sequence	LongTest Sequence	Reset Board Sequence	D/ND*
SYSAM Reset Test (#909)(a)		X	X	D
SYSAM Dual Port Ram Test (#910)(a)		X	X	D
Sanity Handshake Test (#911)	X	X		ND
Time of Day Clock Test (#913)	X	X		ND
G3-MT Loop Around Test (#915)	X	X		ND
Outpulse Relay Test (#916) (b)		X		ND
Analog Loop Around Test (#917) (b)		X		ND
SYSAM Refresh Test(#912)†	X	X		ND

* D = Destructive; ND = Nondestructive

† The SYSAM Refresh Test (#912) runs only in G3r V1 software loads preceding 6.0.

Notes:

a. If you are invoking the long test sequence from the PPN G3-MT, the SYSAM Reset Test and SYSAM DPR Test will cause the PNN G3-MT to logoff and tear down any SYSAM Remote Access connection. After the test sequence runs, the Error Log should be examined for SYSAM errors of type 1 and 2049 to determine if either SYSAM Reset Test or SYSAM DPR Test have failed. If you are invoking the long demand test sequence from an EPN G3-MT, all tests listed above will run and the results will display on the EPN G3-MT. The PPN G3-MT will still be logged off and any SYSAM Remote Access connection will be torn down.

b. These tests can be run only on the active SYSAM circuit pack. If you are invoking the long test sequence on the standby SYSAM circuit pack, these tests (Outpulse Relay Test and Analog Loop Around Test) will not be run.

SYSAM Reset Test (#909)

This test is destructive.

This test will reset the SYSAM circuit pack. The destructive nature of this test will cause the PNN G3-MT to logoff and any SYSAM Remote Access connection (e.g.,. INADS connection) to be torn down.

The reset test causes terminals connected to the SYSAM either directly or through the remote access port to logoff prior to the test results being displayed. To determine a test result from one of these locations, log back in and examine the Error Log for SYSAM error type 1 with no aux data. This error entry indicates that the SYSAM Reset Test failed and that the SYSAM circuit pack should be replaced.

If the test is being run from somewhere other than the SYSAM ports, (for example, a G3-MT connected to an EPN Maintenance circuit pack) test results will be displayed on the screen without a logoff taking place.

Table 9-356. Test #909 SYSAM Reset Test

Error Code	Test Result	Description/ Recommendation
100	ABORT	The requested test did not complete within the allowable time period. 1. Retry the command. 2. If the test continues to abort, follow normal escalation procedures.
1000	ABORT	System resources required to run this test are not available. 1. Retry the command at 1 minute intervals, a maximum of 5 times. 2. If the test continues to abort, follow normal escalation procedures.
1318 1335 2029 2033 2500	ABORT	Internal System Error 1. Retry the command. 2. If the test continues to abort, follow normal escalation procedures.

Continued on next page

Table 9-356. Test #909 SYSAM Reset Test — *Continued*

Error Code	Test Result	Description/ Recommendation
1338	ABORT	The test is not allowed to run since a planned SPE interchange is in progress. This may be caused by a planned interchange initiated automatically during 24 hour scheduled testing. 1. Wait 3 minutes and retry the command. 2. If the test continues to abort, follow normal escalation procedures.
1339	ABORT	The test could not run on the standby SYSAM circuit pack in the standby SPE carrier because the standby SPE is unavailable. 1. Refer to the STBY-SPE maintenance documentation for information on why a standby SPE may be unavailable and what repair actions should be taken. The screen for the **status spe** command should indicate that handshake is down. This may be caused by a variety of reasons such as the SPE-SELECT switches on the DUPINT circuit packs being set to the position of the active SPE, a failure of the DUPINT circuit pack, or loss of power on the standby SPE. The *SPE Selected* field on the **status spe** screen will display *spe a* or *spe b* if both SPE-SELECT switches are in the a or b positions, respectively.
2000	ABORT	Response to the test request was not received within the allowable time period. If the system is equipped with the High Reliability or Critical Reliability Configuration and if the SYSAM circuit pack is on the standby SPE, this abort code may indicate that the standby SPE is not responding to the handshake message. If this is the case, the standby SPE maintenance software may take up to two minutes to indicate that handshake communication with the standby SPE is down. The ABORT code will then change to 1339 (standby SPE unavailable). 1. Retry the command at 1 minute intervals, a maximum of 3 times. 2. If the test continues to abort with this abort code, follow normal escalation procedures.

Continued on next page

Table 9-356. Test #909 SYSAM Reset Test — *Continued*

Error Code	Test Result	Description/ Recommendation
2334	ABORT	The hardware mailbox on the standby Duplication Interface board is not ready to receive messages. 1. Retry the command at 1 minute intervals, a maximum of 5 times. 2. If the test continues to abort with this abort code, follow normal escalation procedures.
	FAIL	The circuit pack was reset, but responded with a NOT PASS status indicating it did not pass initialization correctly. The SYSAM is not functioning correctly. The system should continue to operate but will not have the ability to perform alarm origination, if needed. Environmental monitoring, the PNN G3-MT, and the System Sanity Timer are lost. 1. Retry the command. 2. If test continues to fail, replace the SYSAM circuit pack. 3. If the test continues to fail after replacing the SYSAM circuit pack, follow normal escalation procedures. To replace the SYSAM circuit pack, refer to 'Replacing SPE Circuit Packs" in Chapter 5, 'Responding to Alarms and Errors".
	PASS	The circuit pack was reset, it did pass initialization correctly. The other SYSAM tests should be examined to verify that the SYSAM is functioning normally. 1. Execute **test maintenance a|b short** and verify that the SYSAM is operating correctly.

SYSAM Dual Port RAM Test (#910)

This test is destructive.

This test will terminate any PPN G3-MT or SYSAM Remote Access session. This is a coordinated test of the Processor circuit pack's and SYSAM circuit pack's on-board microprocessor ability to access the SYSAM's Dual Port RAM (DPR). Control messages and data are passed through the DPR. The test forces both the Processor and the on-board microprocessor to read and write the DPR simultaneously in alternate locations.

The DPR test causes the PNN G3-MT and SYSAM Remote Access sessions to logoff prior to the test result being displayed. To determine the test result, if the test is run from the PNN G3-MT or SYSAM Remote Access connection, System Technician should log back in and examine the Error Log for an error against SYSAM, with error code 2049, no aux data. This error entry indicates that the SYSAM DPR Test did fail and that the SYSAM circuit pack should be replaced.

If the test is being run from somewhere other than the PPN G3-MT or SYSAM Remote Access connection (for example, EPN G3-MT), the test results will be displayed on the screen.

Table 9-357. Test #910 SYSAM Dual Port RAM Test

Error Code	Test Result	Description/ Recommendation
100	ABORT	The requested test did not complete within the allowable time period. 1. Retry the command. 2. If the test continues to abort, follow normal escalation procedures.
1000	ABORT	System resources required to run this test are not available. 1. Retry the command at 1 minute intervals, a maximum of 5 times. 2. If the test continues to abort, follow normal escalation procedures.
1318 1335 2029 2033 2500	ABORT	Internal System Error 1. Retry the command. 2. If the test continues to abort, follow normal escalation procedures.

Continued on next page

Table 9-357. Test #910 SYSAM Dual Port RAM Test — *Continued*

Error Code	Test Result	Description/ Recommendation
1338	ABORT	The test is not allowed to run since a planned SPE interchange is in progress. This may be caused by a planned interchange initiated automatically during 24 hour scheduled testing. 1. Wait 3 minutes and retry the command. 2. If the test continues to abort, follow normal escalation procedures.
1339	ABORT	The test could not run on the standby SYSAM circuit pack in the standby SPE carrier because the standby SPE is unavailable. 1. Refer to the STBY-SPE maintenance documentation for information on why a standby SPE may be unavailable and what repair actions should be taken. The screen for the **status spe** command should indicate that handshake is down. This may be caused by a variety of reasons such as the SPE-SELECT switches on the DUPINT circuit packs being set to the position of the active SPE, a failure of the DUPINT circuit pack, or loss of power on the standby SPE. The *SPE selected* field on the **status spe** screen will display *spe a* or *spe b* if both SPE-SELECT switches are in the a or b positions, respectively.
2000	ABORT	Response to the test request was not received within the allowable time period. If the system is equipped with the High Reliability or Critical Reliability Configuration and if the SYSAM circuit pack is on the standby SPE, this abort code may indicate that the standby SPE is not responding to the handshake message. If this is the case, the standby SPE maintenance software may take up to two minutes to indicate that handshake communication with the standby SPE is down. The ABORT code will then change to 1339 (standby SPE unavailable). 1. Retry the command at 1 minute intervals, a maximum of 3 times. 2. If the test continues to abort with this abort code, follow normal escalation procedures.

Continued on next page

Table 9-357. Test #910 SYSAM Dual Port RAM Test — *Continued*

Error Code	Test Result	Description/ Recommendation
2334	ABORT	The hardware mailbox on the standby Duplication Interface board is not ready to receive messages. 1. Retry the command at 1 minute intervals, a maximum of 5 times. 2. If the test continues to abort with this abort code, follow normal escalation procedures.
	FAIL	The DPR is not functioning correctly. Communication between the Processor and SYSAM is lost. The system will not be able to report environmental alarms, use the PPN G3-MT, or use the SYSAM Remote Access connection if the need should arise. 1. Retry the command. 2. If the test continues to fail, replace the SYSAM circuit pack. 3. Retry the command. 4. If the test continues to fail, replace the Processor circuit pack. 5. Retry the command. 6. If the test continues to fail after replacing the SYSAM and Processor circuit packs, follow normal escalation procedures. To replace the SYSAM circuit pack, refer to "Replacing SPE Circuit Packs" in Chapter 5, "Responding to Alarms and Errors".
	PASS	Dual Port RAM is functioning. Communication does exist between the Processor and SYSAM circuit packs.

Sanity Handshake Test (#911)

This test checks the SYSAM circuit pack's ability to respond to queries. A message is sent to the SYSAM circuit pack which then returns a message. The SYSAM must reply for this test to pass. If this test fails, the SYSAM circuit pack should be considered insane, the circuit pack should be reset via the **reset maintenance a|b** command.

Table 9-358. Test #911 Sanity Handshake Test

Error Code	Test Result	Description/ Recommendation
100	ABORT	The requested test did not complete within the allowable time period. 1. Retry the command. 2. If the test continues to abort, follow normal escalation procedures.
1000	ABORT	System resources required to run this test are not available. 1. Retry the command at 1 minute intervals, a maximum of 5 times. 2. If the test continues to abort, follow normal escalation procedures.
1318 1335 2029 2033 2500	ABORT	Internal System Error 1. Retry the command. 2. If the test continues to abort, follow normal escalation procedures.
1338	ABORT	The test is not allowed to run since a planned SPE interchange is in progress. This may be caused by a planned interchange initiated automatically during 24 hour scheduled testing. 1. Wait 3 minutes and retry the command. 2. If the test continues to abort, follow normal escalation procedures.

Continued on next page

Table 9-358. Test #911 Sanity Handshake Test — *Continued*

Error Code	Test Result	Description/ Recommendation
1339	ABORT	The test could not run on the standby SYSAM circuit pack in the standby SPE carrier because the standby SPE is unavailable. 1. Refer to the STBY-SPE maintenance documentation for information on why a standby SPE may be unavailable and what repair actions should be taken. The screen for the **status spe** command should indicate that handshake is down. This may be caused by a variety of reasons such as the SPE-SELECT switches on the DUPINT circuit packs being set to the position of the active SPE, a failure of the DUPINT circuit pack, or loss of power on the standby SPE. The *SPE selected* field on the **status spe** screen will display *spe a* or *spe b* if both SPE-SELECT switches are in the a or b positions, respectively.
2000	ABORT	Response to the test request was not received within the allowable time period. If the system is equipped with the High Reliability or Critical Reliability Configuration and if the SYSAM circuit pack is on the standby SPE, this abort code may indicate that the standby SPE is not responding to the handshake message. If this is the case, the standby SPE maintenance software may take up to two minutes to indicate that handshake communication with the standby SPE is down. The ABORT code will then change to 1339 (standby SPE unavailable). 1. Retry the command at 1 minute intervals, a maximum of 3 times. 2. If the test continues to abort with this abort code, follow normal escalation procedures.
2318	ABORT	The standby SYSAM was not responding within the allowable time period. 1. Retry the command at 1 minute intervals, a maximum of 3 times. 2. If the test continues to abort with this abort code, follow normal escalation procedures.

Continued on next page

Table 9-358. Test #911 Sanity Handshake Test — *Continued*

Error Code	Test Result	Description/ Recommendation
2334	ABORT	The hardware mailbox on the standby Duplication Interface board is not ready to receive messages. 1. Retry the command at 1 minute intervals, a maximum of 5 times. 2. If the test continues to abort with this abort code, follow normal escalation procedures.
	FAIL	The SYSAM did not respond to the sanity handshake query. 1. Run the **test maintenance 1a|b long** command. The terminal login will drop and you must log in again. 2. If test continues to fail, replace the SYSAM circuit pack at the earliest convenience. 3. Retry the command. 4. If the test continues to fail after replacing the SYSAM circuit pack, follow normal escalation procedures. To replace the SYSAM circuit pack, refer to "Replacing SPE Circuit Packs" in Chapter 5, "Responding to Alarms and Errors".
	PASS	The SYSAM did respond to the sanity handshake query. 1. Examine other SYSAM tests for errors.

SYSAM Refresh Test (#912)

This test checks the current state of the Alarm Panel LEDs on the SYSAM circuit pack and attempts to resynchronize these LEDs to reflect the current alarm levels in the system. Any discrepancies are resolved by changing the Alarm Panel LEDs to what maintenance believes the alarm levels should be. The SYSAM Refresh Test runs only in G3r V1 software loads preceding 6.0.

Table 9-359. Test #912 SYSAM Refresh Test

Error Code	Test Result	Description/ Recommendation
100	ABORT	The requested test did not complete within the allowable time period. 1. Retry the command. 2. If the test continues to abort, follow normal escalation procedures.
1000	ABORT	System resources required to run this test are not available. 1. Retry the command at 1 minute intervals, a maximum of 5 times. 2. If the test continues to abort, follow normal escalation procedures.
1318 1335 2029 2033 2500	ABORT	Internal System Error 1. Retry the command. 2. If the test continues to abort, follow normal escalation procedures.
1338	ABORT	The test is not allowed to run since a planned SPE interchange is in progress. This may be caused by a planned interchange initiated automatically during 24 hour scheduled testing. 1. Wait 3 minutes and retry the command. 2. If the test continues to abort, follow normal escalation procedures.

Continued on next page

Table 9-359. Test #912 SYSAM Refresh Test — *Continued*

Error Code	Test Result	Description/ Recommendation
1339	ABORT	The test could not run on the standby SYSAM circuit pack in the standby SPE carrier because the standby SPE is unavailable. 1. Refer to the STBY-SPE maintenance documentation for information on why a standby SPE may be unavailable and what repair actions should be taken. The screen for the **status spe** command should indicate that handshake is down. This may be caused by a variety of reasons such as the SPE-SELECT switches on the DUPINT circuit packs being set to the position of the active SPE, a failure of the DUPINT circuit pack, or loss of power on the standby SPE. The *SPE selected* field on the **status spe** screen will display *spe a* or *spe b* if both SPE-SELECT switches are in the a or b positions, respectively.
2000	ABORT	Response to the test request was not received within the allowable time period. If the system is equipped with the High Reliability or Critical Reliability Configuration and if the SYSAM circuit pack is on the standby SPE, this abort code may indicate that the standby SPE is not responding to the handshake message. If this is the case, the standby SPE maintenance software may take up to two minutes to indicate that handshake communication with the standby SPE is down. The ABORT code will then change to 1339 (standby SPE unavailable). 1. Retry the command at 1 minute intervals, a maximum of 3 times. 2. If the test continues to abort with this abort code, follow normal escalation procedures.
2005	FAIL	Could not handshake with the SYSAM circuit pack. The SYSAM circuit pack did not respond to a query message sent to it. Run the **test maintenance a|b short**, and refer to the repair procedures outlined for Test, the Sanity Handshake Test.

Continued on next page

Table 9-359. Test #912 SYSAM Refresh Test — *Continued*

Error Code	Test Result	Description/ Recommendation
2318	ABORT	The standby SYSAM was not responding within the allowable time period. 1. Retry the command at 1 minute intervals, a maximum of 3 times. 2. If the test continues to abort with this abort code, follow normal escalation procedures.
2334	ABORT	The hardware mailbox on the standby Duplication Interface board is not ready to receive messages. 1. Retry the command at 1 minute intervals, a maximum of 5 times. 2. If the test continues to abort with this abort code, follow normal escalation procedures.
	FAIL	Internal System Error 1. Retry the command 2. If the test continues to abort, follow normal escalation procedures.
	PASS	The SYSAM circuit pack has been sent the correct state for the system LEDs. If the LEDs do not reflect the system alarms shown in the alarm log, the SYSAM circuit pack may have problems. 1. Verify the LEDs on the SYSAM circuit pack can be changed by issuing the **test led port-network 1** command. All the SYSAM circuit pack LEDs should go on and then off, and then be refreshed. 2. After the **test led port-network 1** command finishes, if the SYSAM circuit pack LEDs do not reflect the alarm log, follow normal escalation procedures.

Time-Of-Day Clock Test (#913)

The short term accuracy of the time-of-day clock is tested. The test reads the clock once, waits a short time (10 seconds) and reads the clock again. The second reading of the clock must be within certain limits (10 seconds) relative to the first reading for the test to pass. The command **display time** can be used to display the current setting of the time-of-day clock.

If the time-of-day clock is not functioning correctly, the software time-of-day clock is used (this clock is not as accurate as the hardware clock).

Table 9-360. Test #913 Time-Of-Day Clock Test

Error Code	Test Result	Description/ Recommendation
100	ABORT	The requested test did not complete within the allowable time period. 1. Retry the command. 2. If the test continues to abort, follow normal escalation procedures.
1000	ABORT	System resources required to run this test are not available. 1. Retry the command at 1 minute intervals, a maximum of 5 times. 2. If the test continues to abort, follow normal escalation procedures.
1318 1335 2029 2033 2500	ABORT	Internal System Error 1. Retry the command. 2. If the test continues to abort, follow normal escalation procedures.
1338	ABORT	The test is not allowed to run since a planned SPE interchange is in progress. This may be caused by a planned interchange initiated automatically during 24 hour scheduled testing. 1. Wait 3 minutes and retry the command. 2. If the test continues to abort, follow normal escalation procedures.

Continued on next page

Table 9-360. Test #913 Time-Of-Day Clock Test — *Continued*

Error Code	Test Result	Description/ Recommendation
1339	ABORT	The test could not run on the standby SYSAM circuit pack in the standby SPE carrier because the standby SPE is unavailable. 1. Refer to the STBY-SPE maintenance documentation for information on why a standby SPE may be unavailable and what repair actions should be taken. The screen for the **status spe** command should indicate that handshake is down. This may be caused by a variety of reasons such as the SPE-SELECT switches on the DUPINT circuit packs being set to the position of the active SPE, a failure of the DUPINT circuit pack, or loss of power on the standby SPE. The *SPE selected* field on the **status spe** screen will display *spe a* or *spe b* if both SPE-SELECT switches are in the a or b positions, respectively.
2000	ABORT	Response to the test request was not received within the allowable time period. If the system is equipped with the High Reliability or Critical Reliability Configuration and if the SYSAM circuit pack is on the standby SPE, this abort code may indicate that the standby SPE is not responding to the handshake message. If this is the case, the standby SPE maintenance software may take up to two minutes to indicate that handshake communication with the standby SPE is down. The ABORT code will then change to 1339 (standby SPE unavailable). 1. Retry the command at 1 minute intervals, a maximum of 3 times. 2. If the test continues to abort with this abort code, follow normal escalation procedures.
2318	ABORT	The standby SYSAM was not responding within the allowable time period. 1. Retry the command at 1 minute intervals, a maximum of 3 times. 2. If the test continues to abort with this abort code, follow normal escalation procedures.

Continued on next page

Table 9-360. Test #913 Time-Of-Day Clock Test — *Continued*

Error Code	Test Result	Description/ Recommendation
2334	ABORT	The hardware mailbox on the standby Duplication Interface board is not ready to receive messages. 1. Retry the command at 1 minute intervals, a maximum of 5 times. 2. If the test continues to abort with this abort code, follow normal escalation procedures.
any	FAIL	The short term accuracy of the time-of-day clock is not within limits (10 seconds >= difference <= 20 seconds). **NOTE:** *any* indicates the difference between the two reads. A zero (0) indicates that the time-of-day clock is not running.) 1. Run the short test sequence several times to make sure the error is occurring consistently. 2. If test continues to fail consistently, replace the SYSAM circuit pack at the earliest convenience. 3. After replacing the SYSAM, you must set the time-of-day clock via the **set time** command. To replace the SYSAM circuit pack, refer to 'Replacing SPE Circuit Packs" in Chapter 5, 'Responding to Alarms and Errors".
	PASS	The short term accuracy of the time-of-day clock on the SYSAM circuit pack is within limits.

SYSAM G3-MT Loop Around Test (#915)

This test places the G3-MT port on the SYSAM circuit pack into loop-around mode and verifies the data integrity of the channel. The test is non-destructive but may cause a momentary loss of keyboard input from the G3-MT while the test is running (about 1 second).

On High and Critical Reliability systems, there are two G3-MT ports on each of the two SYSAM circuit packs: one is labeled ACTIVE and the other STANDBY. On the currently active SYSAM circuit pack, only the ACTIVE port is tested. On the currently standby SYSAM circuit pack, only the STANDBY port is tested.

Table 9-361. TEST #915 SYSAM G3-MT Loop Around Test

Error Code	Test Result	Description/ Recommendation
100	ABORT	The requested test did not complete within the allowable time period. 1. Retry the command. 2. If the test continues to abort, follow normal escalation procedures.
1000	ABORT	System resources required to run this test are not available. 1. Retry the command at 1 minute intervals, a maximum of 5 times. 2. If the test continues to abort, follow normal escalation procedures.
1318 1335 2029 2033 2500	ABORT	Internal System Error 1. Retry the command. 2. If the test continues to abort, follow normal escalation procedures.
1338	ABORT	The test is not allowed to run with a planned SPE interchange in progress. This may be caused by a planned interchange initiated automatically during 24 hour scheduled testing. 1. Wait 3 minutes and retry the command. 2. If the test continues to abort, follow normal escalation procedures.

Continued on next page

Table 9-361. TEST #915 SYSAM G3-MT Loop Around Test — *Continued*

Error Code	Test Result	Description/ Recommendation
1339	ABORT	The test could not run on the standby SYSAM circuit pack in the standby SPE carrier because the standby SPE is unavailable. 1. Refer to the STBY-SPE maintenance documentation for information on why a standby SPE may be unavailable, and related repair actions. The screen for the **status spe** command should indicate that handshake is down. This may be caused by a variety of reasons such as the SPE-SELECT switches on the DUPINT circuit packs being set to the position of the active SPE, a failure of the DUPINT circuit pack, or loss of power on the standby SPE. The *SPE selected* field on the **status spe** screen will display *spe a* or *spe b* if both SPE-SELECT switches are in the a or b positions, respectively.
2000	ABORT	Response to the test request was not received within the allowable time period. If the system is equipped with the High Reliability or Critical Reliability Configuration and if the SYSAM circuit pack is on the standby SPE, this abort code may indicate that the standby SPE is not responding to the handshake message. If this is the case, the standby SPE maintenance software may take up to two minutes to indicate that handshake communication with the standby SPE is down. The ABORT code will then change to 1339 (standby SPE unavailable). 1. Retry the command at 1 minute intervals, a maximum of 3 times. 2. If the test continues to abort with this abort code, follow normal escalation procedures.
2334	ABORT	The hardware mailbox on the standby Duplication Interface board is not ready to receive messages. 1. Retry the command at 1 minute intervals, a maximum of 5 times. 2. If the test continues to abort with this abort code, follow normal escalation procedures.

Continued on next page

Table 9-361. TEST #915 SYSAM G3-MT Loop Around Test — *Continued*

Error Code	Test Result	Description/ Recommendation
2318	FAIL	The STANDBY port on the SYSAM circuit pack on the standby SPE did not respond to the test in time. If this test fails at least 3 times in a row, the STANDBY port is probably be unusable for diagnostics via the SPE-Down or SPE-Standby Interfaces. Other than this unavailability, this failure should cause no service effects. 1. Try the test again at 1-minute intervals up to a maximum of 3 times. 2. If the test fails all 3 attempts, replace the standby SYSAM circuit pack at the earliest convenience. To replace the SYSAM circuit pack, refer to "Replacing SPE Circuit Packs" in Chapter 5, "Responding to Alarms and Errors".
	FAIL	The SYSAM G3-MT channel failed the loop around test. The G3-MT will probably be unusable for administration or maintenance. The EPN G3-MT, if available, or remote access can still be used. 1. Retry the command. 2. If test continues to fail, replace the SYSAM circuit pack at the earliest convenience. To replace the SYSAM circuit pack, refer to "Replacing SPE Circuit Packs" in Chapter 5, "Responding to Alarms and Errors".
	PASS	The G3-MT channel passed the loop around test. 1. If the PPN G3-MT is not usable, check the G3-MT and associated cabling.

SYSAM Outpulse Relay Test (#916)

This test validates the operation of the SYSAM Remote Access CO trunk used for Alarm Origination and remote access. The SYSAM will go off-hook and then on-hook on this trunk. If loop current is detected then the test passes. This test is not allowed if the remote access line is in use or if the SYSAM is on the Standby SPE in SPE Duplication Option systems. Also, this test must be administered for testing via the **change system-parameters maintenance** screen.

Table 9-362. TEST #916 SYSAM Outpulse Relay Test

Error Code	Test Result	Description/ Recommendation
100	ABORT	The requested test did not complete within the allowable time period. 1. Retry the command. 2. If the test continues to abort, follow normal escalation procedures.
1000	ABORT	System resources required to run this test are not available. 1. Retry the command at 1 minute intervals, a maximum of 5 times. 2. If the test continues to abort, follow normal escalation procedures.
1018	ABORT	The test has been disabled via administration. 1. To enable test, set the "Test Remote Access Port" field to 'y' on the system-parameters maintenance screen. 2. Retry the command.
1318 1335 2029 2033 2500	ABORT	Internal System Error 1. Retry the command. 2. If the test continues to abort, follow normal escalation procedures.

Continued on next page

Table 9-362. TEST #916 SYSAM Outpulse Relay Test — *Continued*

Error Code	Test Result	Description/ Recommendation
1338	ABORT	The test is not allowed to run since a planned SPE interchange is in progress. This may be caused by a planned interchange initiated automatically during 24 hour scheduled testing. 1. Wait 3 minutes and retry the command. 2. If the test continues to abort, follow normal escalation procedures.
1339	ABORT	The test could not run on the standby SYSAM circuit pack in the standby SPE carrier because the standby SPE is unavailable. 1. Refer to the STBY-SPE maintenance documentation for information on why a standby SPE may be unavailable and what repair actions should be taken. The screen for the **status spe** command should indicate that handshake is down. This may be caused by a variety of reasons such as the SPE-SELECT switches on the DUPINT circuit packs being set to the position of the active SPE, a failure of the DUPINT circuit pack, or loss of power on the standby SPE. The *SPE selected* field on the **status spe** screen will display *spe a* or *spe b* if both SPE-SELECT switches are in the a or b positions, respectively.
1364	ABORT	The component on which the test was to be run is on the Standby SPE. This test may only be run on this component when it resides on the Active SPE. 1. To verify the remote access line is working (connected), run this on the Active SYSAM.
1379	ABORT	System could not determine if testing of remote access port is administered. 1. Check system-parameters maintenance screen for a 'y' in the "Test Remote Access Port" field. 2. Retry the command. 3. If data is correct on system-parameters maintenance screen, follow normal escalation procedures.

Continued on next page

Table 9-362. TEST #916 SYSAM Outpulse Relay Test — *Continued*

Error Code	Test Result	Description/ Recommendation
2000	ABORT	Response to the test request was not received within the allowable time period. If the system is equipped with the High Reliability or Critical Reliability Configuration and if the SYSAM circuit pack is on the standby SPE, this abort code may indicate that the standby SPE is not responding to the handshake message. If this is the case, the standby SPE maintenance software may take up to two minutes to indicate that handshake communication with the standby SPE is down. The ABORT code will then change to 1339 (standby SPE unavailable). 1. Retry the command at 1 minute intervals, a maximum of 3 times. 2. If the test continues to abort with this abort code, follow normal escalation procedures.
2034	ABORT	The remote access port is busy. A remote user is probably dialed into the switch. 1. If a remote user is dialed in, remote access line is working. No need to run test. Use the **status logins** command to verify that the SYSAM-RMT port is in use.

Continued on next page

Table 9-362. TEST #916 SYSAM Outpulse Relay Test — *Continued*

Error Code	Test Result	Description/ Recommendation
	FAIL	SYSAM reported test failure. No loop current detected. 1. Retry the command. 2. If test continues to fail, examine SYSAM remote access line for connectivity, manually check line for loop current. 3. If SYSAM remote access line checks out fine, but test still fails, check backplane connector cabling. Also, check the cabling from the wall field to the backplane. 4. If backplane cabling checks out fine, replace SYSAM circuit pack at earliest convenience. To replace the SYSAM circuit pack, refer to "Replacing SPE Circuit Packs" in Chapter 5, "Responding to Alarms and Errors".
	PASS	SYSAM detected loop current on remote access port. 1. If system cannot call remote maintenance facility or remote maintenance facility cannot contact system, check with local Central Office for problems with SYSAM remote access line.

SYSAM Analog Loop Around Test (#917)

This test checks the on-board modem circuitry of the SYSAM circuit pack associated with the SYSAM remote access port. Test data is looped through the on-board modem and verified for integrity. This test is not allowed if the remote access port is in use or if the SYSAM is on the Standby SPE in SPE Duplication Option systems. Also, this test must be administered for testing via the **change system-parameters maintenance** screen.

NOTE:
This test does not send any data onto the SYSAM remote access line, but the test does require the line to be present to pass reliably.

Table 9-363. TEST #917 SYSAM Analog Loop Around Test

Error Code	Test Result	Description/ Recommendation
100	ABORT	The requested test did not complete within the allowable time period. 1. Retry the command. 2. If the test continues to abort, follow normal escalation procedures.
1000	ABORT	System resources required to run this test are not available. 1. Retry the command at 1 minute intervals, a maximum of 5 times. 2. If the test continues to abort, follow normal escalation procedures.
1018	ABORT	The test has been disabled via administration. 1. To enable test, set the "Test Remote Access Port" field to "y" on the system-parameters maintenance screen. 2. Retry the command.
1318 1335 2029 2033 2500	ABORT	Internal System Error 1. Retry the command. 2. If the test continues to abort, follow normal escalation procedures.

Continued on next page

Table 9-363. TEST #917 SYSAM Analog Loop Around Test — *Continued*

Error Code	Test Result	Description/ Recommendation
1338	ABORT	The test is not allowed to run since a planned SPE interchange is in progress. This may be caused by a planned interchange initiated automatically during 24 hour scheduled testing. 1. Wait 3 minutes and retry the command. 2. If the test continues to abort, follow normal escalation procedures.
1339	ABORT	The test could not run on the standby SYSAM circuit pack in the standby SPE carrier because the standby SPE is unavailable. 1. Refer to the STBY-SPE maintenance documentation for information on why a standby SPE may be unavailable and what repair actions should be taken. The screen for the **status spe** command should indicate that handshake is down. This may be caused by a variety of reasons such as the SPE-SELECT switches on the DUPINT circuit packs being set to the position of the active SPE, a failure of the DUPINT circuit pack, or loss of power on the standby SPE. The *SPE selected* field on the **status spe** screen will display *spe a* or *spe b* if both SPE-SELECT switches are in the a or b positions, respectively.
1364	ABORT	The component on which the test was to be run is on the Standby SPE. This test may only be run on this component when it resides on the Active SPE. 1. To verify the remote access line is working (connected), run this on the Active SYSAM.
1379	ABORT	System could not determine if testing of remote access port is administered. 1. Check system-parameters maintenance screen for a 'y' in the "Test Remote Access Port" field. 2. Retry the command. 3. If data is correct on system-parameters maintenance screen, follow normal escalation procedures.

Continued on next page

Table 9-363. TEST #917 SYSAM Analog Loop Around Test — *Continued*

Error Code	Test Result	Description/ Recommendation
2000	ABORT	Response to the test request was not received within the allowable time period. If the system is equipped with the High Reliability or Critical Reliability Configuration and if the SYSAM circuit pack is on the standby SPE, this abort code may indicate that the standby SPE is not responding to the handshake message. If this is the case, the standby SPE maintenance software may take up to two minutes to indicate that handshake communication with the standby SPE is down. The ABORT code will then change to 1339 (standby SPE unavailable). 1. Retry the command at 1 minute intervals, a maximum of 3 times. 2. If the test continues to abort with this abort code, follow normal escalation procedures.
2034	ABORT	The remote access port is busy. A remote user is probably dialed into the switch. 1. Wait until the remote user session is terminated, retry the command.
2317	ABORT	Test #916 SYSAM Outpulse Relay Test failed. 1. Follow instructions for FAIL result for SYSAM Outpulse Relay Test (#916).

Continued on next page

Table 9-363. TEST #917 SYSAM Analog Loop Around Test — *Continued*

Error Code	Test Result	Description/ Recommendation
	FAIL	SYSAM reported test failure. The system will not be able to reliably contact any remote maintenance facility with alarm data or be called into via the SYSAM remote access port. The system will continue to provide good service. 1. If SYSAM Outpulse Relay test (#916) is also failing, check for presence of SYSAM remote access line and resolve SYSAM remote access line problems. 2. If test #916 passes, the fault in on the SYSAM circuit pack, replace at the earliest convenience. To replace the SYSAM circuit pack, refer to "Replacing SPE Circuit Packs" in Chapter 5, "Responding to Alarms and Errors".
	PASS	SYSAM detected correct data through loop around connection. 1. If system cannot call remote maintenance facility or remote maintenance facility cannot contact system, check with local Central Office for problems with SYSAM remote access line.

SYSTEM (System)

MO Name As It Appears in Alarm Log	Alarm Level	Initial System Technician Command to Run (a)	Full Name of MO
SYSTEM	None	None	System

a. SYSTEM has no associated alarms and thus appears only in the Error Log. There are no tests that run on SYSTEM.

The SYSTEM maintenance object is used to log information about system resets, including interchanges. When software encounters a problem with hardware, or with its own processes, and requests a restart to clear the problem, an error is logged under SYSTEM. For example, if there is a loss of clock in the Processor Port Network (PPN) in a system with duplicated SPEs, the system switches to the other clock and then executes a level 2 system reset to recover from hardware problems caused by the loss of clock. Errors logged under SYSTEM can help to determine the cause of a reset. The **display initcauses** screen should also contain information about the reset. See "Troubleshooting a Duplicated SPE" in Chapter 5, "Responding to Alarms and Errors" for more information about interchanges.

Hardware Error Log Entries and Test to Clear Values

System Error Log Entries					
Error Type	**Aux Data**	**Associated Test**	**Alarm Level**	**On/Off Board**	**Test to Clear Value**
8 (a)	0	None			
9 (b)	Any	None			
10 (c)	Any	None			
601 (d)	Any	None			
602 (e)	Any	None			
605 (f)	(p)	None			
606 (g)	Any	None			
607 (h)	Any	None			
6001 (i)	Any	None			
6002 (j)	(o)	None			
6003 (k)	(o)	None			
6101 (l)	Any	None			
6102 (m)	(o)	None			
6103 (n)	(o)	None			

Notes:

a. Software requested a System Restart Level 3.

b. Software requested a System Restart Level 2.

c. Software requested a System Restart Level 1.

d. An error occurred during initialization.

e. Translation data was corrupted, so the system requested a Restart Level 3 to reload translation data from the Mass Storage System (MSS).

f. A **reset system interchange** or a scheduled SPE interchange failed. The AUX Data indicates the cause of the failure. Consult the table in note p. Use **status spe** to determine the current SPE status and follow the Standby SPE Maintenance procedures to resolve the problems that are preventing the SPE interchange.

g. A **reset system interchange health-override** command has failed. The standby SPE state-of-health (SOH) would not allow a spontaneous SPE interchange. Use **status spe** to determine the current SPE status and follow the Standby SPE Maintenance procedures to resolve the problems that are preventing the SPE interchange.

h. A requested SPE interchange has failed because the SPEs are locked by means of the SPE-Select switches on the duplication interface circuit packs. with the SYSAM lock switches.

i. Error 6001 indicates that an operating system error occurred on the active SPE. The aux data gives the source of the error:

Aux-Data Value	Operating System Error Type
5	Software Abort
6	SPE Bus Error

Diagnosis of these errors should be escalated.

j. Error 6002 indicates that an application error occurred on the active SPE. See note (o) to diagnose the error using the aux data.

k. Error 6003 indicates that an application alarm occurred on the active SPE. See note (o) to diagnose the error using the aux data.

l. Error 6100 indicates that an operating system error occurred on the standby SPE. See error 6001 (i) to interpret the aux data. Diagnosis of this error should be escalated.

m. Error 6102 indicates that an application error occurred on the standby SPE. See note (o) to diagnose the error using the aux data.

n. Error 6103 indicates that an application alarm occurred on the standby SPE. See note (o) to diagnose the error using the aux data.

o. For error types 6002, 6003, 6102, and 6103, the aux-data value points to the MO that the error or alarm is logged against. The following table lists possible aux-data values and their associated MOs. Locate the Error Log entry for the indicated MO and follow the instructions for that error. If the aux-data value reported does not appear in this table, escalate the problem.

AUX Data	Implicated Maintenance Object
4137	PKT-INT
16384	PROCR
16385	MEM-BD
16386	SYSAM
16389	DUPINT
16391	SW-CTL
16392	HOST-ADAPTER
16397	TAPE
16398	DISK

p. The following table and notes give causes and recommendations for each AUX data value for error 605.

SYSTEM Error 605 AUX Data, Failure of Planned Interchange

Aux Data	See Note	Explanation
1352	1	Standby SOH "non-functional"
1353	1	Standby SOH not "functional"
1355	1	Handshake Communication with Standby SPE is down
1356	1	Memory Shadowing not enabled
1357	1	Standby memory not refreshed
1358	2	Mass Storage System was in use
1359	3	PKT-INT link migration failed
1360	1	Interchange failed *
1361	4	SW-CTL failure
1369	7	Could not suspend G3-MT connectivity *
1370	4	Could not freeze active SW-CTL *
1371	5	Internal Error associated with processor interrupts *
1372	6	Minor alarm on standby SYSAM or PKT-INT
1395		SPE Duplication not administered
1396	3	PKT-INT Link Migration failure in Begin Step *
1397	3	PKT-INT Link Migration denied, (peer test in progress)
1398	3	PKT-INT Link Migration failure in Completion Step *
1399	3	PKT-INT Link Migration failure in Finish Step *
1400	4	Could Not Idle SW-CTL dual port RAM *
1401	4	Could Not Refresh SW-CTL dual port RAM *
1402	5	Internal Error (could not get duplication status)
1403	5	Unable to inhibit Standby Maintenance Monitor
1404	5	Failure to determine Standby SPE alarm status
1406	3	Active SPE's PKT-INT in held-reset state
1418	8	Active Duplication Interface circuit pack is in a bad state and needs to be reset.
2500	5	Internal Software failure (* sometimes)

Notes for SYSTEM Error 605 AUX Data:

1. Follow repair instructions in STBY-SPE in Chapter 9, "Maintenance Object Repair Procedures" for the particular standby SPE problem. After fixing that problem, try the interchange again. If the problem persists, follow normal escalation procedures.
2. Mass Storage System is in use. Check Disk and Tape LEDs for activity. Wait until all MSS activity completes, then retry the interchange again. If the problem persists, check for alarms and errors against MSS components and follow repair procedures in Chapter 9, "Maintenance Object Repair Procedures".
3. Test the PKT-INT on both carriers with the long test sequence. Follow procedures for PKT-INT in Chapter 9, "Maintenance Object Repair Procedures". Once *all* tests of both PKT-INTs pass, try the interchange again. If the problem persists, follow normal escalation procedures.
4. Consult SW-CTL service documentation. Test SW-CTL on both carriers with the long test sequence. Follow repair instructions for any failures. Once *all* tests of both SW-CTLs pass, try the interchange again. If the problem persists, follow normal escalation procedures.
5. Make sure the standby SPE is refreshed, then try the interchange again. If the problem persists, follow normal escalation procedures.
6. Examine alarm log to determine which of the PKT-INT or SYSAM circuit packs has a minor alarm against it. Consult the section in this chapter for that circuit pack.
7. Check for errors or alarms against active SPE's SYSAM. If you find any, consult SYSAM service documentation. If you find none, and if all tests of the SYSAM long sequence pass, try the interchange again. If the problem persists, follow normal escalation procedures.
8. Run **test duplication-interface long** and follow instructions for any test that does not pass.

Maintenance Object Repair Procedures
TAPE to TTR-LEV

T

TAPE

MO Name As It Appears In Alarm Log	Alarm Level	Initial System Technician Command To Run (a)	Full Name of MO
TAPE	WARNING	test tape a|b long	MSS Tape circuit pack
TAPE	MINOR	test tape a|b long	MSS Tape circuit pack
TAPE	MAJOR(b)	test tape a|b long	MSS Tape circuit pack

a. In a system with a simplex SPE, the carrier need not be specified. In a system with duplicated SPEs, carrier a or b must be specified.

b. This alarm occurs when the system undergoes a reset of level 3, 4, or 5, and the switch cannot load translation from tape; it also occurs when a program update cannot be applied. See the Error Log Table, error type 3585.

Description

The TN1656 Tape circuit pack is part of the Mass Storage System (MSS). The MSS provides non-volatile storage for system software, translation data, announcement data and program update data. As shown in the figure below, the MSS consists of a Host Adapter circuit on the UN332 MSS-Network Control circuit pack (MSSNET), a Small Computer System Interface (SCSI) bus, a

TN1656 Tape circuit pack and the TN1657 Disk Drive circuit pack. The Disk Drive acts as the primary storage device. The Tape Drive serves as a backup device and as a removable medium for system data.

The system is usually booted from the bootimage stored on disk. The **save translation** and **save announcements** commands save to disk the memory-resident translation data and TN750-resident announcement data, respectively. The **backup disk** command copies data from the disk to the tape for backup storage. The **restore disk** command copies data from the tape back to disk. All MSS components reside in the SPE, or PPN control carrier (carrier A for a simplex SPE, carriers A and B for a duplicated SPE).

The Tape circuit pack contains SCSI bus terminators, a -48V to +12V power converter, an industry standard SCSI based Tape Drive, and interface circuitry to the private bus to control the LEDs, detect the presence of the circuit pack, and identify the vintage of the hardware.

A -48V to +12V converter circuit on the Tape circuit pack provides power for both the Tape Drive and the Disk Drive. The presence of +12V on these circuit packs is monitored separately by maintenance software so that a failure of the +12V converter on the Tape circuit pack can be identified or ruled out as the source of the problem when the Disk Drive loses +12V power.

The Host Adapter Circuit, Tape circuit pack, and Disk circuit pack are treated as separate, but related, maintenance objects (H-ADAPTER,TAPE, and DISK). Since the Disk circuit pack is controlled by SCSI commands which are generated by the Host Adapter, problems with the Host Adapter can prevent communications with the Disk. Whenever the Host Adapter is taken out of service by the **busy-out host-adapter** command, or due to failure of a critical Host Adapter test, the Tape and Disk maintenance objects are also placed in a maintenance busyout state.

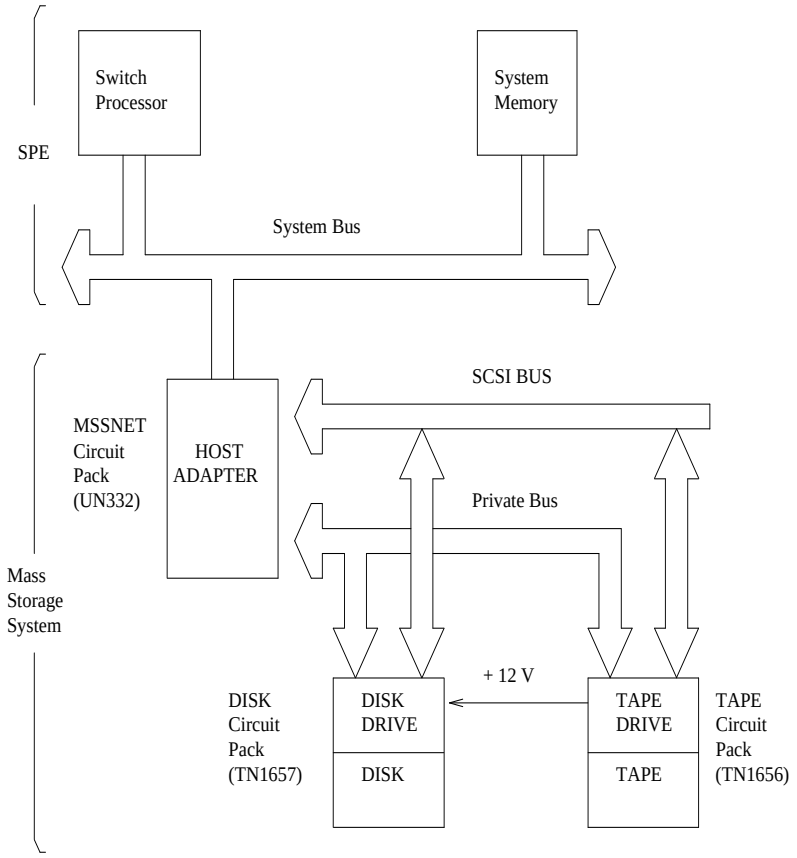

Figure 9-116. Mass Storage System Interactions

General Repair Procedures for TAPE

The following guidelines should be followed when troubleshooting and resolving tape problems.

1. Cleaning the tape drive head is very important. Dirty tape drive heads may cause problems that appear to be hardware related.

   A tape drive head with abrasive particles can permanently damage a new tape. A worn tape may leave abrasive particles in the tape drive head. Follow the tape head cleaning instructions that appear at the end of the test descriptions for TAPE.

2. *Avoid saving translations or announcements* on the backup tape cartridge if all other Tape Drive and Host Adapter problems have not been resolved.

If there is something wrong with the Mass Storage System, an attempt to save translations or announcements could destroy a good copy of the files on the tape cartridge.

3. In a system configured with duplicated SPEs, the tests run on the standby Tape circuit pack are identical to those run on the active Tape circuit pack. Communications between the active and standby SPEs is provided by the DUPINT circuit pack for both the control channel and memory shadowing. Therefore, problems with the DUPINT circuit pack may affect maintenance tests of the standby Tape circuit pack.
4. Check the error log for power related problems and refer to the maintenance documentation on power.
5. The *data on the tape cartridge will likely be destroyed* if:
   - The tape cartridge is removed when the amber LED on the Tape circuit pack is on.
   - The Tape circuit pack is removed while the amber LED on the Tape Circuit is on.
   - Power is removed from the Tape Drive while the amber LED on the Tape circuit pack is on.
6. The *data on the disk will likely be destroyed* if the Tape circuit pack is removed while the amber LED on the Disk Drive is on.
7. Dirty Tape Drive heads may cause problems that appear to be hardware related. To clean the tape heads in the Tape Drive, follow the tape head cleaning procedure at the end of this section.
8. Since maintenance software cannot always distinguish between errors caused by the tape cartridge and those caused by the Tape Drive or Host Adapter, check for tape cartridge errors first.
   - Make sure there is a tape cartridge in the Tape Drive.
   - Make sure that the write protect lock is not active. To deactivate write protect, slide the *RECORD* switch on the tape cartridge in the direction of the arrow on the switch.

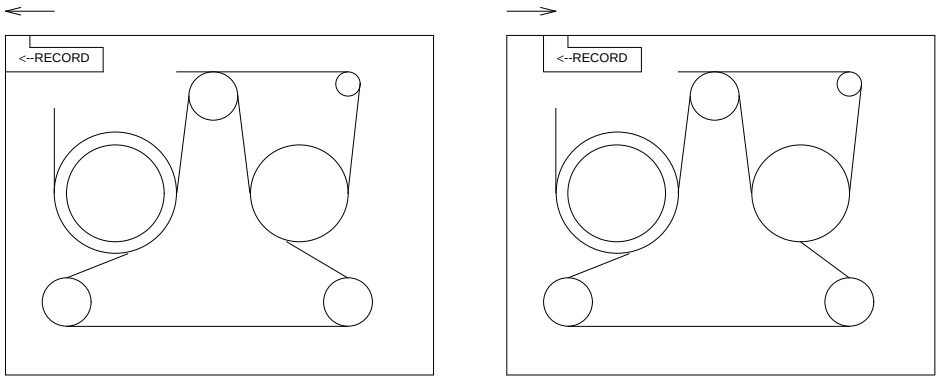

Tape cartridge in record position

Tape cartridge in write-protect position

Figure 9-117. Mass Storage System Interactions

Replacing a TAPE Cartridge

If the tape cartridge needs to be replaced, follow the procedure given below:

1. Resolve all other Tape circuit pack alarms/problems.
2. Install a new tape cartridge which has the same release number or, if that is not practical, install a tape cartridge with the same file layout as the original tape cartridge. Generally the file layouts are the same for tapes formatted for same product (G3r V1 or G3r V2). However, for G3r V1, a new file was added to the tape starting with the 6.1 release to support the **restore disk install** command. Therefore depending on the release number of the existing tape, a tape earlier than 6.1 or later than 6.0 should be used for G3r V1.

   When a tape cartridge is first inserted, there should be a spinning noise indicating that the Tape Drive is performing a retension pass (moving the tape forward and then back to the tape mark several times). This may take several minutes.
3. Verify that the tape cartridge has an acceptable release number by checking the Software Version via the **list configuration software-vintage** command.
4. If a new tape cartridge is not available, but all other tape alarms/problems have been resolved, then replace the damaged tape cartridge with the backup tape cartridge. Wait for the retension pass to complete.
5. Verify that the tape cartridge has the latest translations by issuing the **list configuration software-vintage** command. If the tape cartridge does not have the latest translation or announcement files, then perform a **backup disk**.

Replacing the TAPE Circuit Pack

For a Simplex SPE:

a. Enter **busyout host-adapter**. The Host Adapter should be "busied out" to prevent other applications from trying to access the tape or the disk. The Tape circuit pack supplies +12V to the Disk circuit pack so when it is removed, the Disk circuit pack will also go out of service.

b. Replace the Tape circuit pack and insert the tape cartridge into the new Tape circuit pack.

c. Issue the **reset host-adapter** command. This may take up to 3 minutes to complete since it waits for the tape to retension.

d. Issue the **release host-adapter** command.

e. Issue the **status spe** command and check that the status screen indicates that the tape and disk are now in service.

For a Duplicated SPE:

a. See "Replacing SPE Circuit Packs" in Chapter 5, "Responding to Alarms and Errors".

b. After the standby SPE is powered up and fully refreshed, test the standby tape using the **test tape long** command.

Hardware Error Log Entries and Test to Clear Values

Table 9-364. TAPE Error Log Entries

Error Type	Aux Data†	Associated Test	Alarm Level	On/Off Board	Test to Clear Value
1 (a)	any	Tape Reset (#894)	MINOR	OFF	reset tape a|b*
18 (b)	0	Busyout Tape (#817)	WARNING	OFF	release tape a|b*
250 (c)	0	Reset Tape (#894)	WARNING	OFF	reset tape a|b*
257 (d)	any	Tape Loop Around (#814)	WARNING	OFF	test tape a|b* sh rep 2
513 (e)	any	Tape Diagnostics (#813)	MINOR	ON	test tape a|b* sh rep 2
526 (f)	0	Busyout Host-adapter	WARNING	OFF	release host-adptr a|b*
529 (g)	0		WARNING	OFF	reset tape a|b*
769 (h)	any	Tape Loop Around (#814)	MINOR	ON	test tape a|b* sh rep 2
1025 (i)	any	Tape Write-Read (#810)	MINOR	OFF	test tape a|b* long rep 2
1281 (j)	any	Tape Diagnostics (#813)	MINOR	ON	test tape a|b* sh rep 2
1537 (k)	any	Tape Write-Read (#810)	WARNING	OFF	test tape a|b* long rep 2
1793 (l)	any	Tape Loop Around (#814)	MINOR	OFF	test tape a|b* sh rep 2
2049 (m)	any	Tape Loop Around (#814)	MINOR	OFF	test tape a|b* sh rep 2
2305 (n)	†	Tape Frmwr Counters (#812)	WARNING	OFF	reset tape a|b*
2306 (o)	5504	Tape Frmwr Counters (#812)	WARNING	OFF	test tape a|b* sh rep 2
2561 (p)	any	Tape Write-Read (#810)	MINOR	OFF	test tape a|b* long rep 2
2817 (q)	any	Tape Status (#815)	WARNING	ON	test tape a|b* sh rep 2

Continued on next page

Table 9-364. TAPE Error Log Entries — *Continued*

Error Type	Aux Data†	Associated Test	Alarm Level	On/Off Board	Test to Clear Value
3073 (r)	any	In-line	MINOR	ON	test tape a|b* long rep 2
3329 (s)	any	Tape Audit (#811)	MINOR	OFF	test tape a|b* long rep 2
3585 (t)	408		MAJOR/ MINOR	OFF	
3585 (u)	409		MAJOR/ MINOR	OFF	
3841 (v)	‡	Miscellaneous	MINOR	OFF	test tape a|b* long rep 1

* In a system with a simplex SPE, the carrier does not have to be specified. In a system with duplicated SPE, the carrier (a or b) must be specified.

† The number of times the tape has been accessed. This number is at least 90% of the manufacturer's recommended limit.

‡ If error type 1 with aux data of 123 is present, this field will have the out of service cause data. See Table 9-372 on page T-49 at the end of the section on TAPE.

The "service state" field in the Alarm Log refers to the accessibility of the device. IN (in service) means that users can access the device and all maintenance tests will run. MTC (maintenance busy) means that the device is "busied out" and users cannot access it although all demand maintenance tests will run. OUT (out of service) means that users cannot access the device but background and demand testing can run.

Notes:

a. Error type 1 means that the device is out of service as a result of maintenance tests detecting a critical failure of the tape drive.

b. Error type 18 means that the Tape was busied out on demand from the System Access Terminal.

c. Error type 250 means that the Reset Test (#809 or #894) failed.

d. Error type 257 means that the device could not be accessed.

e. Error type 513 means that on-board tape drive diagnostics tests requested by the Tape Diagnostic Test (#813) failed.

f. Error type 526 means that the Host Adapter was busied out. This also causes the Tape to be busied out.

g. Error type 529 means that there was a failure to put the tape in service or to take it out of service.

h. Error type 769 means that the tape Loop-around Test (#814) failed.

i. Error type 1025 means that a tape medium error was detected when the tape was read or written. The tape cartridge should be replaced if this error continues to be reported.

j. Error type 1281 indicates that a hardware failure condition was detected by the Firmware Error Counters Read and Clear Test (#812). See the Table 9-372 on page T-49 at the end of the section on TAPE.

k. Error type 1537 indicates that the tape cartridge is write protected. Check the RECORD switch on the tape cartridge. It should be pushed forward in the direction shown by the arrow on the switch.

l. Error type 1793 is an in-line error from the tape control software that indicates there was a problem with the SCSI Bus Access Failure or Memory Access Failure between the Host Adapter circuit pack and the Tape circuit pack. See Table 9-372 on page T-49 at the end of the section on TAPE.

m. Error type 2049 indicates that a bad command was sent to the tape drive. This may be caused by a software error or a hardware failure. Execute the **test tape long** command and fix any failures associated with those tests. If no hardware failures are reported, follow the normal escalation procedures.

n. Error type 2305 means that the tape has exceeded 90% of the manufacturer's recommended limit of accesses. The tape should be replaced as soon as practical. This alarm can be retired by issuing the **reset tape** command but it will reappear each time the Tape Firmware Counter Test (#812) is run.

o. Error type 2306 means that a block has been reassigned on the tape or an attempt to reassign a block has failed. The tape should be replaced as soon as practical.

p. Error type 2561 indicates that the Data Write-Read Test (#810) failed.

q. Error 2817 indicates that the Tape Status Test (#815) detected a fault. See Table 9-372 on page T-49 at the end of the section on TAPE.

r. Error type 3073 indicates in-line errors reported by the tape control software. See Table 9-372 on page T-49 at the end of the section on TAPE.

s. Error type 3329 indicates that the Tape Audit Test (#811) detected a corrupted directory file. Execute the **test tape long** command and fix any failures associated with those tests. The Auxiliary Code for this Error Log entry and the failure code for the Tape Audit test indicate the directory file that is corrupted. If Test 811 does not fail, follow normal escalation procedures.

t. Error type 3585 with auxiliary data 408 indicates that there was an error in reading translation data from the tape and/or disk.

   This error only occurs on a system reset 3,4, or 5 (Cold 1, system reboot, or extended system reboot). If a disk is present, the system first tries to read translation from the first and second copies of translation on the disk and, if that fails, it tries to read translation from the first and second copies of translation on the tape.

   If an error was detected with reading translation from the disk and then the tape, a 408 error will be logged. This error will invoke *Emergency Transfer* on a system with simplex SPE. It will cause an SPE interchange if the system is equipped with duplicated SPEs. To clear this alarm, correct all other tape errors.

   If the SPE is not duplicated, it may be necessary to use a backup tape to first restore translation data to the disk. A new backup tape should be obtained as soon as possible.

   If the system is equipped with duplicated SPEs and if the alarm is associated with the tape on the standby SPE the active SPE should be running with the most current translation. Therefore after correcting any hardware failures associated with the tape and disk on the standby SPE, a **save translation** command should be used to save translations to the disk and tape on the standby SPE.

u. Error type 3585 with auxiliary data 409 means that there was an error in reading the program update file from both the disk and tape or there was an error in applying the program update file once it was successfully read from the disk or tape.

   This error only occurs during a system reset 4 or 5 (system reboot or extended system reboot). If a disk is present, the system will try to read the program update file from the disk first and, if that fails, it will try to read the program update file from the tape. After it succeeds in reading a copy of the program update file, it will check to see if the program update information is appropriate for the software version in memory before it applies it to the software boot image.

   If an error is detected with any part of the process of reading the program update file from the disk or tape and applying the program update to memory, a hardware error 409 will be generated. This error will invoke a

MAJOR alarm and *Emergency Transfer* on a system with simplex SPE. It will initiate an SPE interchange followed by a MINOR alarm on a system with duplicated SPEs. When this error occurs, the copies of the program update files on the disk and tape are invalidated so that those files no longer appear when a **list configuration software** command is entered from the System Access terminal.

To clear this alarm, first correct any other tape and disk alarms. Then restore the two copies of the program update files on the disk and tapes and apply those upgrades using "Software Updates" in Chapter 6, "Additional Maintenance Procedures".

v. Error type 3841 is used to record miscellaneous data when an out-of-service condition occurs. See Table 9-372 on page T-49 at the end of the section on TAPE.

System Technician-Demanded Tests: Descriptions and Error Codes

Always investigate tests in the order presented in the table below when inspecting errors in the system. By clearing error codes associated with the *Reset Test*, for example, you may also clear errors generated from other tests in the testing sequence.

Order of Investigation	Short Test Sequence	Long Test Sequence	Reset Board Sequence	D/ND*
Tape Reset Test (#809)	X	X		ND
Tape Diagnostic Test (#813)	X	X		ND
Tape Loop Around Test (#814)	X	X		ND
Tape Status Test (#815)	X	X		ND
Tape Firmware Error				
Counters Read and Clear Test (#812)	X	X		ND
Tape Write-Read Test (#810)		X		ND
Tape Audit Test (#811)		X		ND
Tape Reset (#894)			X	ND

* D = Destructive; ND = Nondestructive

Tape Reset Test (#809 and #894)

The Tape Reset Test consists of the following steps controlled by firmware on the Host Adapter Circuit (located on the MSSNET CIRCUIT PACK):

- Tape Drive reset

  An SCSI ‘‘BUS DEVICE RESET’’ message is transmitted to the Tape Drive to reset it.

- Presence test

  An SCSI ‘‘INQUIRY’’ command is sent to the Tape Drive to attempt to query with it. If the Tape Drive is present, it will return information about the device type, whether or not its medium is removable, compatibility with established standards, vendor and product IDs, and other miscellaneous information.

- Capacity test

  An SCSI ‘‘READ CAPACITY’’ command is sent to the Tape Drive. It returns with the logical block address and the block length of the last logic block on the medium.

  An SCSI ‘‘READ DATA BUFFERS’’ command is sent to the Tape Drive. This returns the size of the controller memory data buffers.

  An SCSI ‘‘READ DEFECT DATA’’ command is sent to the Tape Drive. This returns the addresses of bad blocks on the tape that must be mapped around.

- Device Diagnostic Tests

  An SCSI ‘‘SEND DIAGNOSTICS’’ command is sent to the Tape Drive to initiate a set of device-dependent self-tests that are run as a unit. Failures can be for multiple reasons and the return code which indicates the cause of failure is vendor unique. A failure condition will be reported as single failure type since the only repair action is to replace the Tape circuit pack.

Table 9-365. TEST #809/#894 Tape Reset Test

Error Code	Test Result	Description/ Recommendation
526	ABORT	The Host Adapter has been busied out. 1. Issue the **release host-adapter** command. 2. If the test continues to abort, follow normal escalation procedures.
1316	ABORT	Could not get access to the Mass Storage System. Other application software may be using it or background maintenance tests may be running. 1. Retry the command at 1 minute intervals for a maximum of 5 retries. 2. If the test continues to abort, verify that the daily translation-save operation is not in progress (issue the **display system-parameters maintenance** command to display the time for scheduled maintenance and the "y/n" option for saving translation daily). If not, follow normal escalation procedures.
1335	ABORT	Could not run the test on the Standby SPE—Duplication not administered. 1. Refer to the documentation for STBY-SPE maintenance. 2. Administer standby present. 3. If the test continues to abort, follow normal escalation procedures.
1338	ABORT	Could not run the test on the Standby SPE—Interchange pending. 1. Refer to the documentation for STBY-SPE maintenance. 2. After interchange occurs, run test on new active SPE. 3. If the test continues to abort, follow normal escalation procedures.

Continued on next page

Table 9-365. TEST #809/#894 Tape Reset Test — *Continued*

Error Code	Test Result	Description/ Recommendation
1339	ABORT	Could not run the test on the Standby SPE—Handshake down. 1. Refer to the documentation for STBY-SPE maintenance. 2. When the standby is restored to service (use **status spe** to determine state of standby) retry the command. 3. If the test continues to abort, follow normal escalation procedures.
1347	ABORT	Could not run the test on the Standby SPE—Refresh not complete. 1. When the standby is restored to service (use **status spe** to determine state of standby) retry the command. 2. If the test continues to abort, follow normal escalation procedures.
1350	ABORT	Could not run test on Standby SPE—Shadowing not enabled. 1. When the standby is restored to service (use **status spe** to determine state of standby) retry the command. 2. If the test continues to abort, follow normal escalation procedures.
2000	ABORT	Response to the test request was not received within the allowable time period. 1. Retry the command at 1 minute intervals for a maximum of 5 retries. 2. If the test continues to abort, follow normal escalation procedures.

Continued on next page

Table 9-365. TEST #809/#894 Tape Reset Test — *Continued*

Error Code	Test Result	Description/ Recommendation
2500	ABORT	Could not run the test on the Standby SPE—Internal software error. 1. Retry the command at 1 minute intervals for a maximum of 5 retries. 2. If the test continues to abort, follow normal escalation procedures.
5102	ABORT	Could not allocate the Mass Storage System to run this test 1. Retry the command at 1 minute intervals for a maximum of 5 retries. 2. If the test continues to abort, verify that the daily translation-save operation is not in progress (issue the **display system-parameters maintenance** command to display the time for scheduled maintenance and the "y/n" option for saving translation daily). If not, follow normal escalation procedures.
	NO BOARD	The tape has been placed in the "uninstalled" state. 1. Verify that a tape cartridge is installed and not write-protected and that the tape drive is fully inserted and powered up. 2. Attempt a demand reset of the tape. 3. If the reset fails, follow normal escalation procedures.
201	FAIL	The Tape Drive is not responding or it may not be present. 1. Verify that the Tape circuit pack is present and powered. 2. Replace the Tape circuit pack. 3. If the reset continues to fail with this error code, replace the Host Adapter circuit pack. 4. If the reset continues to fail, follow normal escalation procedures.

Continued on next page

Table 9-365. TEST #809/#894 Tape Reset Test — *Continued*

Error Code	Test Result	Description/ Recommendation
5124	FAIL	It has been detected that no tape cartridge is installed. 1. Verify that a tape cartridge is installed and not write-protected. 2. If the reset continues to fail with this error code, continue with the steps below for the general reset failure case.
**	FAIL	The Tape could not be reset successfully. 1. Verify that a tape cartridge is installed and not write-protected. 2. If the test continues to fail, replace the Tape cartridge. Wait for the retension pass to complete. If the test succeeds, issue the **backup disk** command. 3. If the test continues to fail, replace the Tape circuit pack. 4. If the test continues to fail, replace the MSSNET circuit pack. 5. If the test continues to fail, follow normal escalation procedures.
	PASS	The Tape was reset correctly. Check other test results to see if it is operating correctly.

** See Table 9-372 on page T-49 at the end of the section on TAPE.

Tape Write-Read Test (#810)

The Tape Write-Read Test verifies that data can be written to a specific file on the tape and read back successfully. It does not test the integrity of other files on the tape. This test consists of the following steps:

1. Maintenance software in the SPE issues a request to the Host Adapter for a transfer of data between SPE memory and a specified block on the tape.

   The Host Adapter firmware issues an SCSI **WRITE** command to the Tape Drive which results in a transfer of data between the SPE memory and the tape.

2. Maintenance software in the SPE issues a request to the Host Adapter to run a checksum on the data previously written to the tape.

   The Host Adapter reads the data off the tape and computes a checksum which is returned to the SPE maintenance software.

3. Maintenance software compares the value of the checksum from the Host Adapter with the checksum it previously calculated on the data it stored on the tape.

Multiple failure conditions can occur during this test since it uses both the software and hardware functions used during normal operations.

Table 9-366. TEST #810 Tape Write-Read Test

Error Code	Test Result	Description/ Recommendation
1301 1302	ABORT	Could not run the test—internal MSS error 1. Retry the command 2. If the test continues to abort, follow normal escalation procedures.
1304	ABORT	Could not allocate the Mass Storage System to run this test. Other application software may be using it or background maintenance tests may be running. 1. Retry the command at 1 minute intervals for a maximum of 5 retries. 2. If the test continues to abort, verify that the daily translation-save operation is not in progress (Use the **display system-parameters maintenance** command to display the start time for scheduled maintenance and the "y/n" option for saving translation daily). If not, follow normal escalation procedures.

Continued on next page

Table 9-366. TEST #810 Tape Write-Read Test — *Continued*

Error Code	Test Result	Description/ Recommendation
1316	ABORT	Could not get access to the Mass Storage System. Other application software may be using it or background maintenance tests may be running. 1. Retry the command at 1 minute intervals for a maximum of 5 retries. 2. If the test continues to abort, verify that the daily translation-save operation is not in progress (issue the **display system-parameters maintenance** command to display the time for scheduled maintenance and the 'y/n' option for saving translation daily). If not, follow normal escalation procedures.
1335	ABORT	Could not run the test on the Standby SPE—Duplication not administered. 1. Refer to the documentation for STBY-SPE maintenance. 2. Administer standby present. 3. If the test continues to abort, follow normal escalation procedures.
1338	ABORT	Could not run the test on the Standby SPE—Interchange pending. 1. Refer to the documentation for STBY-SPE maintenance. 2. After interchange occurs, run test on new active SPE. 3. If the test continues to abort, follow normal escalation procedures.

Continued on next page

Table 9-366. TEST #810 Tape Write-Read Test — *Continued*

Error Code	Test Result	Description/ Recommendation
1339	ABORT	Could not run the test on the Standby SPE—Handshake down. 1. Refer to the documentation for STBY-SPE maintenance. 2. When the standby is restored to service (use **status spe** to determine state of standby) retry the command. 3. If the test continues to abort, follow normal escalation procedures.
1347	ABORT	Could not run the test on the Standby SPE—Refresh not complete. 1. When the standby is restored to service (use **status spe**), retry the command. 2. If the test continues to abort, follow normal escalation procedures.
1350	ABORT	Could not run the test on the Standby SPE—Shadowing not enabled. 1. When standby is restored to service (use **status spe**), retry command. 2. If the test continues to abort, follow normal escalation procedures.
2000	ABORT	Response to the test request was not received within the allowable time period. 1. Retry the command at 1 minute intervals for a maximum of 5 retries. 2. If the test continues to abort, follow normal escalation procedures.
2500	ABORT	Could not run the test on the Standby SPE—Internal software error. 1. Retry the command at 1 minute intervals for a maximum of 5 retries. 2. If the test continues to abort, follow normal escalation procedures.

Continued on next page

Table 9-366. TEST #810 Tape Write-Read Test — *Continued*

Error Code	Test Result	Description/ Recommendation
5102	ABORT	Could not allocate the Mass Storage System to run this test 1. Retry the command at 1 minute intervals for a maximum of 5 retries. 2. If the test continues to abort, verify that the daily translation-save operation is not in progress (issue the **display system-parameters maintenance** command to display the time for scheduled maintenance and the "y/n" option for saving translation daily). 3. If not, follow normal escalation procedures.
	NO BOARD	The tape has been placed in the "uninstalled" state. 1. Verify that a tape cartridge is installed and not write-protected and that the tape drive is fully inserted and powered up. 2. Attempt a demand reset of the tape. 3. If the reset fails, follow normal escalation procedures.

Continued on next page

Table 9-366. TEST #810 Tape Write-Read Test — *Continued*

Error Code	Test Result	Description/ Recommendation
**	FAIL	The tape could not be accessed, the checksum on the data written did not match the checksum in memory or the data read did not match the data written. 1. Verify that a tape cartridge is installed and not write-protected. 2. If a non-write-protected tape was inserted, remove it and clean the Tape Heads. 3. If the test continues to fail, replace the Tape Cartridge. Wait for the retension pass to complete. If the test succeeds, issue the **backup disk** command. 4. If the test continues to fail, replace the Tape circuit pack. 5. If the test continues to fail, replace the MSSNET circuit pack. 6. If the test continues to fail, follow normal escalation procedures.
	PASS	The Tape write-read test succeeded. Check other test results to see if it is operating correctly.

** See Table 9-372 on page T-49 at the end of the section on TAPE.

Tape Audit Test (#811)

The Tape Audit Test verifies the following Tape Medium conditions.

- The directory can be read.
- There are no "dirty" files. A file is said to be "dirty" if the data in the file is not complete or if the directory entry for that file was not updated after the data was written to the device.
- The tape has not exceeded the number of passes recommended by the manufacturer. If the tape has exceeded 90% of the manufacturer's recommended limit of accesses, the tape should be replaced. An alarm indicating this will appear nightly after scheduled maintenance is executed. This alarm can be retired by issuing the **reset tape** command.

Table 9-367. TEST #811 Tape Audit Test

Error Code	Test Result	Description/ Recommendation
1316	ABORT	Could not get access to the Mass Storage System. Other application software may be using it or background maintenance tests may be running. 1. Retry the command at 1 minute intervals for a maximum of 5 retries. 2. If the test continues to abort, verify that the daily translation-save operation is not in progress (issue the **display system-parameters maintenance** command to display the time for scheduled maintenance and the "y/n" option for saving translation daily). If not, follow normal escalation procedures.
1335	ABORT	Could not run the test on the Standby SPE—Duplication not administered. 1. Refer to the documentation for STBY-SPE maintenance. 2. Administer standby present. 3. If the test continues to abort, follow normal escalation procedures.

Continued on next page

Table 9-367. TEST #811 Tape Audit Test — *Continued*

Error Code	Test Result	Description/ Recommendation
1338	ABORT	Could not run the test on the Standby SPE—Interchange pending. 1. Refer to the documentation for STBY-SPE maintenance. 2. After interchange occurs, run test on new active SPE. 3. If the test continues to abort, follow normal escalation procedures.
1339	ABORT	Could not run the test on the Standby SPE—Handshake down. 1. Refer to the documentation for STBY-SPE maintenance. 2. When the standby is restored to service (use **status spe** to determine state of standby) retry the command. 3. If the test continues to abort, follow normal escalation procedures.
1347	ABORT	Could not run the test on the Standby SPE—Refresh not complete. 1. When the standby is restored to service (use **status spe** to determine state of standby) retry the command. 2. If the test continues to abort, follow normal escalation procedures.
1350	ABORT	Could not run the test on the Standby SPE—Shadowing not enabled. 1. When the standby is restored to service (use **status spe** to determine state of standby) retry the command. 2. If the test continues to abort, follow normal escalation procedures.

Continued on next page

Table 9-367. TEST #811 Tape Audit Test — *Continued*

Error Code	Test Result	Description/ Recommendation
2000	ABORT	Response to the test request was not received within the allowable time period. 1. Retry the command at 1 minute intervals for a maximum of 5 retries. 2. If the test continues to abort, follow normal escalation procedures.
2500	ABORT	Could not run the test on the Standby SPE—Internal software error. 1. Retry the command at 1 minute intervals for a maximum of 5 retries. 2. If the test continues to abort, follow normal escalation procedures.
5102	ABORT	Could not allocate the Mass Storage System to run this test 1. Retry the command at 1 minute intervals for a maximum of 5 retries. 2. If the test continues to abort, verify that the daily translation-save operation is not in progress (issue the **display system-parameters maintenance** command to display the time for scheduled maintenance and the "y/n" option for saving translation daily). If not, follow normal escalation procedures.
	NO BOARD	The tape has been placed in the "uninstalled" state. 1. Verify that a tape cartridge is installed and not write-protected and that the tape drive is fully inserted and powered up. 2. Attempt a demand reset of the tape. 3. If the reset fails, follow normal escalation procedures.

Continued on next page

Table 9-367. TEST #811 Tape Audit Test — *Continued*

Error Code	Test Result	Description/ Recommendation
**	FAIL	The audit of the tape directory failed. 1. Verify that a tape cartridge is installed. 2. Perform a **backup disk**. This may take up to an hour to complete. 3. If the test continues to fail, replace the Tape Cartridge. Wait for the retension pass to complete and rerun the test. If the test succeeds, issue the **backup disk** command. 4. If the test continues to fail, replace the Tape circuit pack. 5. If the test continues to fail, determine if other Tape, Disk, or Host Adapter tests fail, and if they do, follow the repair procedures for those failures. 6. If the test continues to fail, follow normal escalation procedures.
	PASS	The tape directory audit succeeded. Check other results to see if it is operating correctly.

** See Table 9-372 on page T-49 at the end of the section on TAPE.

Tape Firmware Error Counters Read and Clear Test (#812)

The Host Adapter firmware is constantly running background tests on each of its devices. When an error is detected by one of these background tests, the appropriate counter in the host adapter dual port RAM is incremented. The Tape Firmware Error Counters Read and Clear Test requests that the firmware return these errors to the software and clear the area in dual port RAM. If any counter is non-zero, the software then increments the appropriate software counter. The 16 errors reported by the firmware are:

- Unexpected interrupt from the SCSI Bus Interface Controller Chip (SBICC)
- SBICC timed out during SCSI command
- Error interrupt from the Direct Memory Access Controller (DMAC)
- DMAC timeout without issuing interrupt
- Tape self-test failed
- Tape external looparound test failed
- Command failed with bad sense key
- Tape could not be accessed
- Flaw detected in tape medium
- Unrecoverable hardware error on tape
- Invalid parameter in SCSI command
- Media removed or device reset
- Tape is write protected
- Tape reached end of medium
- Block reassigned on tape
- Block reassignment on tape failed

Also this test checks for two other conditions: the presence of grown defects on the tape medium, and whether the tape has been accessed in excess of 90% of the manufacturer's suggested maximum.

Table 9-368. TEST #812 Tape Firmware Error Counters Read and Clear Test

Error Code	Test Result	Description/ Recommendation
1305	ABORT	Could not read firmware error counters. 1. Retry the command at 1 minute intervals a maximum of 5 times. 2. If the test continues to abort, follow normal escalation procedures.
1306	ABORT	Could not read configuration area for defect information. 1. Retry the command at 1 minute intervals a maximum of 5 times. 2. If the test continues to abort, follow normal escalation procedures.
1316	ABORT	Could not get access to the Mass Storage System. Other application software may be using it or background maintenance tests may be running. 1. Retry the command at 1 minute intervals a maximum of 5 times. 2. If the test continues to abort, verify that the daily translation-save operation is not in progress (issue the **display system-parameters maintenance** command to display the time for scheduled maintenance and the "y/n" option for saving translation daily). If not, follow normal escalation procedures.
1335	ABORT	Could not run the test on the Standby SPE—Duplication not administered. 1. Refer to the documentation for STBY-SPE maintenance. 2. Administer standby present. 3. If the test continues to abort, follow normal escalation procedures.

Continued on next page

Table 9-368. TEST #812 Tape Firmware Error Counters Read and Clear Test — *Continued*

Error Code	Test Result	Description/ Recommendation
1338	ABORT	Could not run the test on the Standby SPE—Interchange pending. 1. Refer to the documentation for STBY-SPE maintenance. 2. After interchange occurs, run test on new active SPE. 3. If the test continues to abort, follow normal escalation procedures.
1339	ABORT	Could not run the test on the Standby SPE—Handshake down. 1. Refer to the documentation for STBY-SPE maintenance. 2. When standby is restored to service (use **status spe** to determine state of standby) retry command. 3. If the test continues to abort, follow normal escalation procedures.
1347	ABORT	Could not run the test on the Standby SPE—Refresh not complete. 1. When standby is restored to service (use **status spe** to determine state of standby) retry command. 2. If the test continues to abort, follow normal escalation procedures.
1350	ABORT	Could not run the test on the Standby SPE—Shadowing not enabled. 1. When standby is restored to service (use **status spe** to determine state of standby) retry command. 2. If the test continues to abort, follow normal escalation procedures.

Continued on next page

Table 9-368. TEST #812 Tape Firmware Error Counters Read and Clear Test — *Continued*

Error Code	Test Result	Description/ Recommendation
2000	ABORT	Response to the test request was not received within the allowable time period. 1. Retry the command at 1 minute intervals a maximum of 5 times. 2. If the test continues to abort, follow normal escalation procedures.
2500	ABORT	Could not run the test on the Standby SPE—Internal software error. 1. Retry the command at 1 minute intervals a maximum of 5 times. 2. If the test continues to abort, follow normal escalation procedures.
5102	ABORT	Could not allocate the Mass Storage System to run this test 1. Retry the command at 1 minute intervals a maximum of 5 times. 2. If the test continues to abort, verify that the daily translation-save operation is not in progress (issue the **display system-parameters maintenance** command to display the time for scheduled maintenance and the "y/n" option for saving translation daily). If not, follow normal escalation procedures.
	NO BOARD	The tape has been placed in the "uninstalled" state. 1. Verify that a tape cartridge is installed and not write-protected and that the tape drive is fully inserted and powered up. 2. Attempt a demand reset of the tape. 3. If the reset fails, follow normal escalation procedures.

Continued on next page

Table 9-368. TEST #812 Tape Firmware Error Counters Read and Clear Test — *Continued*

Error Code	Test Result	Description/ Recommendation
7	FAIL	Background tests run by the Host Adapter detected that the tape could not be accessed at some time previous to executing the read-and-clear test. This error may have been caused by removing and reinserting the tape cartridge. The read-and-clear test or reset test must be run at least once before this error is cleared. 1. Try **test tape** again to see if the error has cleared. 2. Verify that the Tape Cartridge is present. 3. If the test continues to fail, replace the Tape circuit pack. 4. If the test continues to fail, follow normal escalation procedures.
11	FAIL	Background tests run by the Host Adapter detected that the Tape drive was reset at some time previous to executing the read-and-clear test. This error may have been caused by removing and reinserting the tape cartridge. The read-and-clear test or reset test must be run at least once before this error is cleared. 1. Try **test tape** again to see if the error has cleared. 2. If the test continues to fail, replace the Tape circuit pack. 3. If the test continues to fail, follow normal escalation procedures.

Continued on next page

Table 9-368. TEST #812 Tape Firmware Error Counters Read and Clear Test — *Continued*

Error Code	Test Result	Description/ Recommendation
5504	FAIL	A tape block has been reassigned to a different location on the tape as a result of a medium error. This is referred to as a "grown defect." Tape performance will be affected since the tape drive must search ahead to read or write this block and then return to where it left off. Continued testing will not correct the problem. The tape should be replaced as soon as practicable. 1. Run the STO-DATA tests to verify that the boot images, translations, announcements, etc., are valid. 2. If errors are detected, run **backup disk full** to restore good copies to the tape. 3. If the STO-DATA tests continue to fail, the tape must be replaced immediately.
5512	FAIL	Ninety per cent of the manufacturer's recommended limit for tape accesses has been exceeded. Continued testing will not correct the problem and the tape will need to be replaced as soon as practicable.

Continued on next page

Table 9-368. TEST #812 Tape Firmware Error Counters Read and Clear Test — *Continued*

Error Code	Test Result	Description/ Recommendation
**	FAIL	At least one of the firmware error counters was non-zero. 1. Run the **test tape** command again to verify that this failure was not from a failure condition which has been cleared as a result of this test clearing the firmware counters. 2. Verify that a tape cartridge is installed and not write-protected. 3. If a non-write-protected tape was inserted, retry the command at 1 minute intervals a maximum of 5 times. 4. If the test continues to fail, remove the tape cartridge and clean the Tape Heads. 5. If the test continues to fail, replace the Tape Cartridge. Wait for the retension pass to complete. If the test succeeds, issue the **backup disk full** command. 6. If the test continues to fail, replace the Tape circuit pack. 7. If the test continues to fail, replace the MSSNET circuit pack. 8. If the test continues to fail, follow normal escalation procedures.
	PASS	The firmware error counters were zero. Check other test results to see if it is operating correctly.

** See Table 9-372 on page T-49 at the end of the section on TAPE.

Tape Diagnostic Test (#813)

The Tape Diagnostic test causes the Host Adapter to send an SCSI **SEND DIAGNOSTICS** command to the TAPE circuit pack. This initiates a set of device-dependent self-tests that are run as a unit. Failures can be for multiple reasons. The return code which indicates the cause of failure is vendor unique. A failure condition will be reported as single failure type since the only repair action is to replace the Tape circuit pack.

Table 9-369. TEST #813 Tape Diagnostic Test

Error Code	Test Result	Description/ Recommendation
1316	ABORT	Could not get access to the Mass Storage System Other application software may be using it or background maintenance tests may be running. 1. Retry the command at 1 minute intervals a maximum of 5 times. 2. If the test continues to abort, verify that the daily translation-save operation is not in progress (issue the **display system-parameters maintenance** command to display the time for scheduled maintenance and the "y/n" option for saving translation daily). If not, follow normal escalation procedures.
1335	ABORT	Could not run the test on the Standby SPE—Duplication not administered. 1. Refer to the documentation for STBY-SPE maintenance. 2. Administer standby present. 3. If the test continues to abort, follow normal escalation procedures.
1338	ABORT	Could not run the test on the Standby SPE—Interchange pending. 1. Refer to the documentation for STBY-SPE maintenance. 2. After interchange occurs, run test on new active SPE. 3. If the test continues to abort, follow normal escalation procedures.

Continued on next page

Table 9-369. TEST #813 Tape Diagnostic Test — *Continued*

Error Code	Test Result	Description/ Recommendation
1339	ABORT	Could not run the test on the Standby SPE—Handshake down. 1. Refer to the documentation for STBY-SPE maintenance. 2. When the standby is restored to service (use **status spe** to determine state of standby) retry the command. 3. If the test continues to abort, follow normal escalation procedures.
1347	ABORT	Could not run the test on the Standby SPE—Refresh not complete. 1. When the standby is restored to service (use **status spe** to determine state of standby) retry the command. 2. If the test continues to abort, follow normal escalation procedures.
1350	ABORT	Could not run the test on the Standby SPE—Shadowing not enabled. 1. When the standby is restored to service (use **status spe** to determine state of standby) retry the command. 2. If the test continues to abort, follow normal escalation procedures.
2000	ABORT	Response to the test request was not received within the allowable time period. 1. Retry the command at 1 minute intervals a maximum of 5 times. 2. If the test continues to abort, follow normal escalation procedures.

Continued on next page

Table 9-369. TEST #813 Tape Diagnostic Test — *Continued*

Error Code	Test Result	Description/ Recommendation
2500	ABORT	Could not run the test on the Standby SPE—Internal software error. 1. Retry the command at 1 minute intervals a maximum of 5 times. 2. If the test continues to abort, follow normal escalation procedures.
5102	ABORT	Could not allocate the Mass Storage System to run this test 1. Retry the command at 1 minute intervals a maximum of 5 times. 2. If the test continues to abort, verify that the daily translation-save operation is not in progress (issue the **display system-parameters maintenance** command to display the time for scheduled maintenance and the "y/n" option for saving translation daily). If not, follow normal escalation procedures.
	NO BOARD	The tape has been placed in the "uninstalled" state. 1. Verify that a tape cartridge is installed and not write-protected and that the tape drive is fully inserted and powered up. 2. Attempt a demand reset of the tape. 3. If the reset fails, follow normal escalation procedures.

Continued on next page

Table 9-369. TEST #813 Tape Diagnostic Test — *Continued*

Error Code	Test Result	Description/ Recommendation
**	FAIL	A Tape diagnostic test failed. 1. Verify that a tape cartridge is installed and not write-protected. 2. If a tape was inserted, remove it and clean the Tape Heads. 3. If the test continues to fail, replace the Tape Cartridge. Wait for the retension pass to complete. If the test succeeds, issue the **backup disk** command. 4. If the test continues to fail, replace the Tape circuit pack. 5. If the test continues to fail, replace the MSSNET circuit pack. 6. If the test continues to fail, follow normal escalation procedures.
	PASS	The Tape passed all diagnostic tests. Check other test results to see if it is operating correctly.

** See Table 9-372 on page T-49 at the end of the section on TAPE.

Tape Loop-around Tests (#814)

This test extends the Host Adapter Loop-Around test to send data from the Host Adapter to buffers on the Tape circuit pack and back to the Host Adapter. It may detect errors related to the Host Adapter, SCSI bus, and the Tape circuit pack. It is intended to functionally test the Tape Drive circuit pack to the extent possible without actually writing data to the tape.

This test consists of two sets of tests:

- Tape Internal Loop-around

  Data is generated in the RAM of the Host Adapter and transferred to its SCSI Data Memory. An SCSI **WRITE DATA BUFFERS** command is sent to the Tape circuit pack which causes the Tape Drive circuit pack to copy the data to its buffers. An SCSI **READ DATA BUFFERS** command is then sent by the Host Adapter to the the Tape Drive circuit pack which causes the Tape circuit pack to transfer the data from its buffers back to the Host Adapter's SCSI Data Memory. The Host Adapter then copies the data back to its private RAM where it compares it with the original test data.

- Tape External Loop-around

  This test is similar to the Internal Loop-around test except that the data originates in the Host Adapter's Dual Port RAM and it is transferred to and from the SCSI Data Memory using SPE system bus accesses. Only a small amount of data is sent to the Tape Drive circuit pack in order to keep system bus access to a minimum.

Table 9-370. TEST #814 Tape Loop-around Test

Error Code	Test Result	Description/ Recommendation
1316	ABORT	Could not get access to the Mass Storage System. Other application software may be using it or background maintenance tests may be running. 1. Retry the command at 1 minute intervals a maximum of 5 times. 2. If the test continues to abort, verify that the daily translation-save operation is not in progress (issue the **display system-parameters maintenance** command to display the time for scheduled maintenance and the "y/n" option for saving translation daily). If not, follow normal escalation procedures.
1335	ABORT	Could not run the test on the Standby SPE—Duplication not administered. 1. Refer to the documentation for STBY-SPE maintenance. 2. Administer standby present. 3. If the test continues to abort, follow normal escalation procedures.
1338	ABORT	Could not run the test on the Standby SPE—Interchange pending. 1. Refer to the documentation for STBY-SPE maintenance. 2. After interchange occurs, run test on new active SPE. 3. If the test continues to abort, follow normal escalation procedures.

Continued on next page

Table 9-370. TEST #814 Tape Loop-around Test — *Continued*

Error Code	Test Result	Description/ Recommendation
1339	ABORT	Could not run the test on the Standby SPE—Handshake down. 1. Refer to the documentation for STBY-SPE maintenance. 2. When the standby is restored to service (use **status spe** to determine state of standby) retry the command. 3. If the test continues to abort, follow normal escalation procedures.
1347	ABORT	Could not run the test on the Standby SPE—Refresh not complete. 1. When the standby is restored to service (use **status spe** to determine state of standby) retry the command. 2. If the test continues to abort, follow normal escalation procedures.
1350	ABORT	Could not run the test on the Standby SPE—Shadowing not enabled. 1. When the standby is restored to service (use **status spe** to determine state of standby) retry the command. 2. If the test continues to abort, follow normal escalation procedures.
2000	ABORT	Response to the test request was not received within the allowable time period. 1. Retry the command at 1 minute intervals a maximum of 5 times. 2. If the test continues to abort, follow normal escalation procedures.

Continued on next page

Table 9-370. TEST #814 Tape Loop-around Test — *Continued*

Error Code	Test Result	Description/ Recommendation
2500	ABORT	Could not run the test on the Standby SPE—Internal software error. 1. Retry the command at 1 minute intervals a maximum of 5 times. 2. If the test continues to abort, follow normal escalation procedures.
5102	ABORT	Could not allocate the Mass Storage System to run this test 1. Retry the command at 1 minute intervals a maximum of 5 times. 2. If the test continues to abort, verify that the daily translation-save operation is not in progress (issue the **display system-parameters maintenance** command to display the time for scheduled maintenance and the "y/n" option for saving translation daily). If not, follow normal escalation procedures.
	NO BOARD	The tape has been placed in the "uninstalled" state. 1. Verify that a tape cartridge is installed and not write-protected and that the tape drive is fully inserted and powered up. 2. Attempt a demand reset of the tape. 3. If the reset fails, follow normal escalation procedures.

Continued on next page

Table 9-370. TEST #814 Tape Loop-around Test — *Continued*

Error Code	Test Result	Description/ Recommendation
**	FAIL	The Tape loop-around test failed. 1. Verify that a tape cartridge is installed and not write-protected. 2. If a tape was inserted, remove it and clean the Tape Heads. 3. If the test continues to fail, replace the Tape Cartridge. Wait for the retension pass to complete. If the test succeeds, issue the **backup disk** command. 4. If the test continues to fail, replace the Tape circuit pack. 5. If the test continues to fail, replace the MSSNET circuit pack. 6. If the test continues to fail, follow normal escalation procedures.
	PASS	The Tape loop-around test passed. Look at the results of other tests to see if it is operating correctly.

** See Table 9-372 on page T-49 at the end of the section on TAPE.

Tape Status Test (#815)

The Tape Status Test verifies the following:

- The Host Adapter knows about the existence of the Tape Drive circuit pack.
- The LEDs on the faceplate can be turned on and off correctly.

  Note that this only verifies that the control and status logic for the LEDs is operating correctly. The operation of the LEDs may also be tested visually by using the **test led** command.
- +12V from on-board DC-to-DC converters are present.

Table 9-371. TEST #815 Tape Status Test

Error Code	Test Result	Description/ Recommendation
1306 1307 1308	ABORT	Internal software error between maintenance software and MSS driver. 1. Retry the command at 1 minute intervals a maximum of 5 times. 2. If the test continues to abort, follow normal escalation procedures.
1316	ABORT	Could not get access to the Mass Storage System. Other application software may be using it or background maintenance tests may be running. 1. Retry the command at 1 minute intervals a maximum of 5 times. 2. If the test continues to abort, verify that the daily translation-save operation is not in progress (issue the **display system-parameters maintenance** command to display the time for scheduled maintenance and the "y/n" option for saving translation daily). If not, follow normal escalation procedures.
1335	ABORT	Could not run the test on the Standby SPE—Duplication not administered. 1. Refer to the documentation for STBY-SPE maintenance. 2. Administer standby present. 3. If the test continues to abort, follow normal escalation procedures.

Continued on next page

Table 9-371. TEST #815 Tape Status Test — *Continued*

Error Code	Test Result	Description/ Recommendation
1338	ABORT	Could not run the test on the Standby SPE—Interchange pending. 1. Refer to the documentation for STBY-SPE maintenance. 2. After interchange occurs, run test on new active SPE. 3. If the test continues to abort, follow normal escalation procedures.
1339	ABORT	Could not run the test on the Standby SPE—Handshake down. 1. Refer to the documentation for STBY-SPE maintenance. 2. When the standby is restored to service (use **status spe** to determine state of standby) retry the command. 3. If the test continues to abort, follow normal escalation procedures.
1347	ABORT	Could not run the test on the Standby SPE—Refresh not complete. 1. When the standby is restored to service (use **status spe** to determine state of standby) retry the command. 2. If the test continues to abort, follow normal escalation procedures.
1350	ABORT	Could not run the test on the Standby SPE—Shadowing not enabled. 1. When the standby is restored to service (use **status spe** to determine state of standby) retry the command. 2. If the test continues to abort, follow normal escalation procedures.

Continued on next page

Table 9-371. TEST #815 Tape Status Test — *Continued*

Error Code	Test Result	Description/ Recommendation
2000	ABORT	Response to the test request was not received within the allowable time period. 1. Retry the command at 1 minute intervals a maximum of 5 times. 2. If the test continues to abort, follow normal escalation procedures.
2500	ABORT	Could not run the test on the Standby SPE—Internal software error. 1. Retry the command at 1 minute intervals a maximum of 5 times. 2. If the test continues to abort, follow normal escalation procedures.
5102	ABORT	Could not allocate the Mass Storage System to run this test 1. Retry the command at 1 minute intervals a maximum of 5 times. 2. If the test continues to abort, verify that the daily translation-save operation is not in progress (issue the **display system-parameters maintenance** command to display the time for scheduled maintenance and the "y/n" option for saving translation daily). If not, follow normal escalation procedures.
	NO BOARD	The tape has been placed in the "uninstalled" state. 1. Verify that a tape cartridge is installed and not write-protected and that the tape drive is fully inserted and powered up. 2. Attempt a demand reset of the tape. 3. If the reset test does not pass, follow normal escalation procedures.

Continued on next page

Table 9-371. TEST #815 Tape Status Test — *Continued*

Error Code	Test Result	Description/ Recommendation
**	FAIL	The tape configuration information shows the tape circuit pack is missing or the tape LED test failed. 1. Verify that a tape cartridge is installed and not write-protected. 2. If a tape was inserted, remove it and clean the tape heads. 3. If the test continues to fail, replace the Tape Cartridge. Wait for the retension pass to complete. If the test succeeds, issue the **backup disk** command. 4. If the test continues to fail, replace the Tape circuit pack. 5. If the test continues to fail, replace the MSSNET circuit pack. 6. If the test continues to fail, follow normal escalation procedures.
	PASS	The Tape status test passed successfully. Check other test results to see if it is operating correctly.

** See Table 9-372 on page T-49 at the end of the section on TAPE.

Tape Reset Test (#894)

The Tape Reset Test is run on as part of the **reset tape** command. The test results for Test 894 are the same as those for Test 809, which is run as part of the **test tape** sequence. All tape alarms are cleared when Test 894 passes, while only some tape alarms may clear when Test 809 passes.

Refer to results for Test 809 for repair procedures.

Tape Drive Head Cleaning Procedure

The following procedures should be used to clean the PBX Tape Drive(s). **A Tape Drive should be cleaned once every three months** to reduce the risk of losing information and to prevent unexpected service calls. An entry should be made in the AT&T Preventive Maintenance Log when this is done (see Chapter 6, "Additional Maintenance Procedures").

A DC2000 Series Data Cartridge Tape Drive Cleaning Kit from 3M is used to clean the tape head and the tape capstan. This kit consists of a Cleaning Positioning Cartridge and 20 cleaning wands (Comcode 406622464 or 3M Reorder number DC051111-12947). A refill kit of 20 cleaning wands is also available (Comcode 406622472 or 3M Reorder Number DC051111-12948).

NOTE:
The cleaning wands are flammable. Dispose of properly.

1. Busy out the the Tape circuit pack using the **busyout tape c** command where *c* is the carrier number (a or b). This prevents background maintenance tests and other application software from trying to access the tape.
2. Eject the Tape Cartridge from the Tape circuit pack (TN1656). Insert the Cleaning Position Cartridge into the Tape Drive with the **label side to the left** (see Picture 1 in Figure 9-118 on page T-49).
3. Prepare the cleaning wand for use as follows: Hold the bristle end down, crush the wand at the "x" area and squeeze to release fluid and saturate the bristles.
4. Insert the wand into **R/W Head Slot** (top of cartridge, see Picture 2 in Figure 9-118 on page T-49) with gentle twisting motion. Stop when solid resistance is felt. Rotate the wand 6 turns while raising and lowering end of wand.
5. Remove the used wand and discard.
6. Prepare a second wand as described in step 3 above.
7. Eject the Cleaning Position Cartridge out of the Tape circuit pack and reinsert it. This will condition the tape drive to move the capstan when the cleaning wand is inserted in the next step.

8. Insert the wand into the **Capstan Slot** (middle of cartridge, see Picture 2 in Figure 9-118 on page T-49) within 10 seconds after the Cleaning Position Cartridge was reinserted.
9. Apply a gentle forward pressure to the wand for about 15 seconds. You should be able to feel the capstan moving.
10. Remove the used wand and discard.
11. Eject the Cleaning Positioning Cartridge and insert the PBX Tape Cartridge back into the Tape Drive.

    NOTE:
    After the Tape Cartridge is inserted back into the Tape Drive, it will run through a retension pass which will take up to two minutes to complete. During that time, the **reset tape** command entered in the next step causes a "please wait" message to flash on the terminal screen while the tape is retensioning, but the command will complete after the retension pass completes.

12. Reset the Tape circuit pack using the **reset tape c** command where *c* is the carrier number (a or b). This will clear out a tape error that indicates the tape cartridge had been removed and reinserted.
13. Release the Tape from its maintenance busy-out state using the **release tape c** command where *c* is the carrier number (a or b).

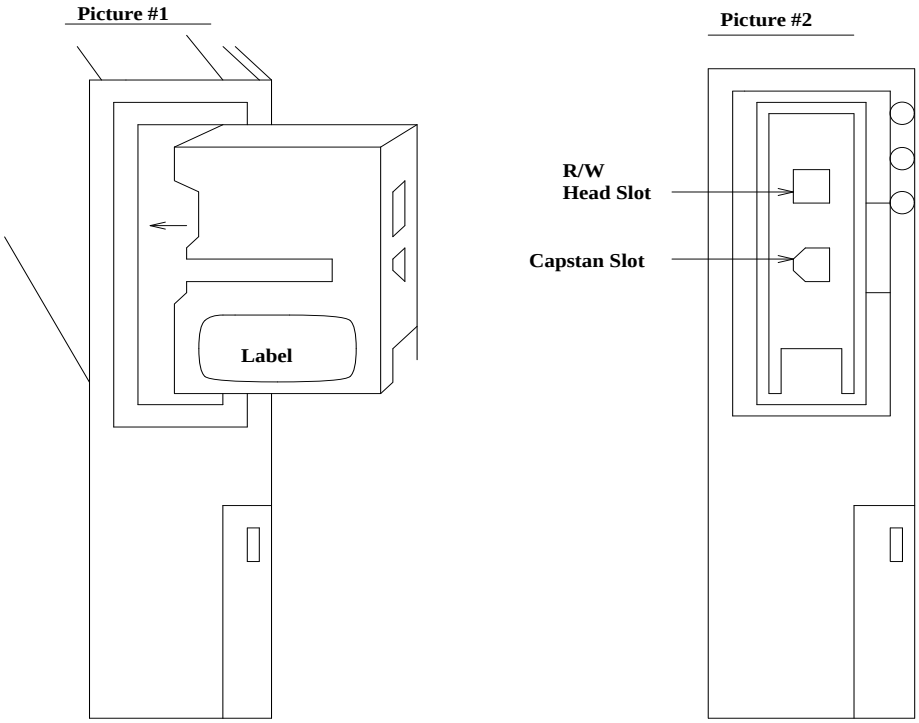

Figure 9-118. Mass Storage System Interactions

Table 9-372. MSS Error Actions

Code	Description
0	Unexpected interrupt from SBICC.
1	SBICC timed out during SCSI command.
2	DMAC generated error interrupt.
3	DMAC timed out without interrupt.
4	Tape self-test failed.
5	Tape external looparound test failed.
6	Command failed with bad *SENSE* key.
7	Tape could not be accessed.

Continued on next page

Table 9-372. MSS Error Actions — *Continued*

Code	Description
8	Flaw detected in tape medium.
9	Unrecoverable hardware failure on tape.
10	Invalid parameter in SCSI command.
11	Media removed or tape reset.
12	Tape is write protected.
13	Tape reached end of medium.
14	Block reassigned on tape.
15	Block reassignment failed on tape.
16	Inconsistent capacity data
17	Device busy
18	Device reservation conflict
19	Request sense failed
101	Unrecognized *opcode*.
102	Unrecognized *modifier*.
103	*xlist_length* too long.
104	Invalid transfer address.
105	Intra-device copy ranges overlap.
121	Device invalid for *opcode* requested.
122	Device non-existent.
123	Device is out of service.
124	*to_byte* or *from_byte* is out of range.
125	*to_byte* + *numbytes* is invalid or *from_byte* + *numbytes* is invalid.
126	Type of device is invalid for *opcode* requested.
201	An unexpected interrupt code was returned from the SBICC. This represents a protocol error that could be the result of the HA or the target device. The device may not be present.
251	SBICC timed out. This could be the fault of the HA or target device. The HA will attempt to reset the SBICC.
301	DMAC error. This could be the fault of the HA or the SCSI target device.

Continued on next page

Table 9-372. MSS Error Actions — *Continued*

Code	Description
351	DMAC timed out. This could be the fault of the HA or the SCSI target device. The HA will attempt to reset the SBICC.
401	Could not save announcements or program update file.
408	Could not read translation from the Disk and Tape as part of system initialization.
409	Could not apply program update file.
422	Could not save translations.
501	A non-critical diagnostic test failed on the Host Adapter. This includes the USART chip test and the LED tests.
511	A diagnostic test requiring bus mastership failed. This happens only as the result of an MSS_DIAG command. This could be the fault of the HA or the system. Therefore the board does not put itself in held reset state. Rather, the error is reported and counters are incremented.
521	The HA looparound test requiring bus mastership failed. This happens only as the result of an MSS_LOOPAROUND command. This could be the fault of the HA or the system. Therefore the board does not put itself in held reset state. Rather, the error is reported and counters are incremented.
531	Target device **SEND DIAGNOSTICS** self-test indicated a hardware error. This indicates that there are problems with the controller or the device, and it should be taken out of service. This error will not occur if other errors (e.g. SBICC) prevent the **SEND DIAGNOSTICS** command from running.
551	The target device internal looparound failed due to data corruption. Other errors (e.g. SBICC, SCSI check condition) would cause a different error code to be reported. This failure demonstrates that the target may potentially corrupt data and it should be taken out of service.

Continued on next page

Table 9-372. MSS Error Actions — *Continued*

Code	Description
552	The target device external looparound failed due to data corruption. Other errors (e.g. SBICC, SCSI check condition) would cause a different error code to be reported. This failure demonstrates that the target may potentially corrupt data. However, the HA does not take the device out of service as a result of this error. This test is only run following the target device internal looparound which should detect actual problems with the target device. This failure implicates the HA bus interface or a system problem.
561	When the MSS_RESET command was issued for a device, it was found not to be present.
562	When the MSS_RESET command was issued for a device, the NQUIRY command failed
563	When the MSS_RESET command was issued for a device, the TEST UNIT READY command failed
564	When the MSS_RESET command was issued for a device, the READ CAPACITY command failed
565	The device reset failed.
566	Device type not supported.
567	Capacity data is inconsistent.
568	Block size doesn't divide into 8K.
601	**REQUEST SENSE** failed.
700	Indicates that there is no specific sense key information for a SCSI target on which a **REQUEST SENSE** was issued. This should never happen because firmware only asks for sense information if errors occurred.
701	SCSI sense information reported a recovered error on a SCSI target where it didn't make sense. Normally recovered errors are filtered by the HA firmware for reads and writes. However, for other commands, this is reported to software.
702	SCSI sense information indicates that the target device cannot be accessed. This will occur if the tape cartridge is not present.
703	SCSI sense information indicates that a SCSI command terminated with a nonrecovered error condition probably caused by a flaw in the medium or an error in the recorded data.

Continued on next page

Table 9-372. MSS Error Actions — *Continued*

Code	Description
704	SCSI sense information indicates a nonrecoverable hardware failure occurred. The tape may be broken.
705	SCSI sense information indicates that there was an illegal parameter in the command descriptor block or in additional parameters supplied. This could be caused by a HA firmware failure or a problem with the target device.
706	SCSI sense information indicates that the target device's removable medium may have been changed or the target controller has been reset.
707	SCSI sense information indicates that reads or writes were attempted for a medium that was protected from this operation.
708	SCSI sense information indicates that a write-once read-multiple device or a sequential-access device encountered a blank block while reading or a write-once read-multiple device encountered a nonblank block while writing. This should never happen; the HA only supports direct access devices.
709	SCSI sense information indicates a vendor-unique sense key.
710	SCSI sense information indicates a **COPY**, **COMPARE**, or **COPY AND VERIFY** command was aborted due to an error condition on the source device, the destination device, or both. This shouldn't happen since these commands aren't issued by the HA.
711	SCSI sense information indicates that the target controller aborted the command.
712	SCSI sense information indicates that a **SEARCH DATA** command has satisfied an equal comparison. This shouldn't happen since this command isn't issued by the HA.
713	This indicates that a buffered peripheral device has reached the end-of-medium and data remains in the buffer that has not been written to the medium.
714	This indicates that the source data did not match the data read from the medium. This should not happen since the HA does not issue any commands involving comparisons.
715	SCSI sense information returned a reserved sense key. This should not happen.
758	Device returned busy.
764	Device returned reservation conflict status.

Continued on next page

Table 9-372. MSS Error Actions — *Continued*

Code	Description
801	HA firmware was attempting to process a command requiring system bus access and the NOGOINT interrupt occurred. This probably indicates that system software failed to enable bus access before issuing an MSS command requiring it. It also could indicate a system problem or a HA problem.
802	HA firmware was accessing the system bus and it timed out. This could be a result of MSS command argument errors, system problems, or a HA problem.
803	HA firmware was accessing the system bus and received a data-parity interrupt. This could indicate a system or HA problem.
804	HA firmware was accessing the system bus and received a error detection and correction interrupt. This could indicate a system or HA problem.
805	System bus error test failed.
1001	Firmware error
1002	Cheetah/Pecos error
1003	Both the 68020 and the DMAC tried to access the same location in the SDM concurrently.
1004	HA firmware couldn't put a response in the response queue because it was full. This could be the fault of the HA, or system software. However, there is no way to recover, therefore the HA places itself in held reset.
2001	A critical diagnostic test on the Host Adapter failed making it dangerous to continue service.
2002	The Host Adapter internal looparound test failed because of data corruption.
3001	An exception occurred indicating a serious hardware or firmware problem. Additional information will be placed in HA DPRAM about which exception occurred and the address at which it occurred.
3002	An interrupt occurred when it shouldn't have. This includes interrupts that are a normal part of command processing but that occurred when they weren't expected.
4001	The checksum of the firmware image in memory prior to FLASH PROM programming failed.
4002	Flash PROM programming failed.

Continued on next page

Table 9-372. MSS Error Actions — *Continued*

Code	Description
5000	The tape cartridge has been changed or the tape drive has been reset by firmware.
5001	Alternate copy of file used—primary could not be accessed.
5113	Device out of service
5124	No tape cartridge in tape drive.
5126	Handshake not up
5127	Memory refresh not complete
5200	Kernel call received a notification.
5201	Spurious interrupt from MSSNET.
5202	Message received on an unexpected class.
5203	File system on the device is corrupt.
5204	Driver failed to get parity error interrupt.
5205	Driver failed to get EDC error interrupt.
5206	Driver failed to get timeout interrupt.
5207	Alternate file could not be accessed.
5208	Bad path index on software call.
5209	Driver failed to get bus error interrupt.
5210	MSS client died.
5212	File 0 (directory) corrupt.
5213	File 1 (alternate directory) corrupt.
5214	File 2 (small boot image) corrupt.
5215	File 3 (alternate small boot image) corrupt.
5216	File 4 (program update file) corrupt.
5217	File 5 (alternate program update file) corrupt.
5218	File 6 (translation file) corrupt.
5219	File 7 (alternate translation file) corrupt.
5220	File 8 (error log) corrupt.
5221	File 9 (alternate error log) corrupt.
5222	File 10 (downloadable firmware) corrupt.

Continued on next page

Table 9-372. MSS Error Actions — *Continued*

Code	Description
5223	File 11 (alternate downloadable firmware) corrupt.
5224	File 12 (announcement file) corrupt.
5225	File 13 (alternate announcement file) corrupt.
5226	File 14 (maintenance scratch file) corrupt.
5227	File 15 (small config core dump) corrupt.
5228	File 16 (large boot image) corrupt.
5229	File 17 (alternate boot image) corrupt.
5230	File 18 (large core dump on disk) corrupt.
5231	File 19 (large core dump on tape) corrupt.
5300	Command timed out.
5301	Driver ran out of resources.
5302	Device or host adapter is not ready.
5303	State information is invalid.
5304	Firmware returned unexpected tag.
5305	MSSNET board is not inserted.
5400	Initialization error.
5401	Kernel call failed.
5402	Timer call failed.
5403	DUPINT call failed.
5404	DRIP call failed.
5405	Critical path destroyed.
5406	Internal error.
5504	Block reassigned on tape as a result of a medium error
5505	While running status test, configuration test failed.
5506	While running status test, LED test failed.
5507	Status test found host adapter in "held reset" state.
5508	Unable to obtain path to PAM.
5509	Translations were not locked.

Continued on next page

Table 9-372. MSS Error Actions — *Continued*

Code	Description
5510	+5V not present
5511	+12V not present
5512	Exceeded 90% of manufacturer's recommended tape access limit.
5513	Disk capacity not sufficient for memory size.
5514	Disk not configured for larger memory size.
30003	Cannot write to tape, cartridge or device error.
30004	Cannot read from tape, cartridge or device error.
30017	Checksum error in block.
30203	Write-read mismatch error.

TDM-BUS (TDM Bus)

MO Name As It Appears In Alarm Log	Alarm Level	Initial System Technician Command To Run	Full Name of MO
TDM-BUS	MAJOR	test tdm P	TDM Bus
TDM-BUS	MINOR	test tdm P	TDM Bus
TDM-BUS	WARNING	test tdm P	TDM Bus

a. P is the Port Network number. Use **list cabinet** to find the port network(s) contained in a given cabinet.

Each port network has a pair of TDM busses, designated TDM Bus A and TDM Bus B, each with 256 time slots. This division allows for duplication of control channels and dedicated tone time slots. The first five time slots on each bus are reserved for the control channel, which is active on only one bus at a time in each Port Network. The next 17 time slots are reserved for system tones such as dial tone, busy tone and so on. As with the control channel, these time slots are active on only one bus, A or B, at a time. The rest of the time slots on each bus are for general system use such as carrying call-associated voice data. The 17 dedicated tone time slots that are inactive can also be used for call processing when all other available time slots are in use.

When the system initializes, the control channel is on TDM Bus A and the dedicated tones on TDM Bus B in each Port Network. If a failure occurs on one of the two busses, the system will switch any control, tone and traffic channels to the other bus. Service will still be provided, though at a reduced capacity.

The **set tdm** PC command has the effect of putting both the control channel and tone time slots on a specified bus, A or B. P specifies the port network number, and C specifies the TDM bus, A or B. Throughout this discussion, PC refers to a specific TDM Bus. References to *port circuit packs* include all circuit packs that terminate on the TDM bus, including the Expansion Interface TN570, and the following service circuit port boards: Call Classifier (TN744), Integrated Announcement (TN750), Maintenance/Test (TN771), Speech Synthesizer (TN725B), Tone Detector (TN748 or TN420). Other terms used are:

- Control Channel Bus: the TDM Bus carrying the active control channel.
- Non-Control Channel Bus: the tdm bus with the inactive control channel.
- Tone Bus: the TDM bus carrying the actived tone time slots
- Non-Tone Bus: the TDM Bus with the inactive tone time slots

TDM Bus Fault Detection and Isolation

TDM Bus are usually caused by one of the following:

- A defective circuit pack connected to the backplane
- Bent pins on the backplane
- Defective bus cables or terminators

It is possible that a circuit pack can cause a TDM Bus fault and still exhibit trouble-free operation. For example, insertions of any circuit pack into a slot with TDM Bus terminations may bend the backplane pins and short two leads together. Since the TDM Bus is a shared resource, identification of the cause of a TDM Bus fault can be difficult. If a TDM Bus problem is suspected, run the **test tdm P** command. If any of the resulting tests fail, you must perform a manual TDM Bus isolation procedure to identify the cause of the problem.

WARNING:
Since the TDM Bus fault isolation procedure involves removing circuit packs and possibly disconnecting entire carriers, the procedure is extremely destructive to the port network that contains the TDM Bus being tested. If possible, arrange to perform this procedure at a time when traffic is minimal.

As circuit packs are removed or entire carriers are disconnected, any active calls terminating on those circuit packs or carriers will be dropped. If you have any hints about a particular circuit pack that may be causing the TDM Bus problem investigate those before performing this procedure (for example, look at any circuit packs that were inserted into the PN just before the TDM bus problem appeared.

When straightening or replacing backplane pins in a carrier that contains a CFY1B Current Limiter, power to the *cabinet* must be removed. When straightening or replacing backplane pins in a carrier that does NOT contain a CFY1B Current Limiter, power to that *carrier* must be shut off. Failure to follow this procedure may result in damage to circuit packs and power supplies, and can be hazardous to the technician.

NOTE:
Maintenance software requires TN748 or TN420 Tone Detector circuit pack to test the TDM Bus. Before starting these procedures, make sure that one of these is installed in the port network being investigated.

Procedure 1

This procedure is an attempt to isolate the TDM Bus fault to circuit packs that are essential to the system operation. For each of the following circuit packs in the port network where the TDM Bus fault appears, perform Procedure 1.

Circuit Pack	Error Log Names
Tone-Clock	TONE-BD, TONE-PT, and TDM-CLK
MSS/Network Control*	SW-CTL and H-ADAPTER
Tone Detector	DETR-BD, GPTD-PT, and DTMR-PT
Expansion Interface	EXP-INTF
Packet Interface*	PKT-INT

1. Display the Alarm Log for the circuit pack via the **display alarms** command.
2. If there are alarms for the circuit pack, refer to that section and try to resolve the alarms.
3. Whether or not all the alarms can be cleared, test the TDM Bus again via the **test tdm P** command.
4. If some TDM Bus tests fail, implement Procedure 1 for the next circuit pack.
5. If all the TDM Bus tests pass, the problem has been fixed.
6. If all circuit packs in the list have been investigated, go to Procedure 2.

Procedure 2

Procedure 2 removes and reinserts port circuit packs (those in the purple slots) one or more at a time. Use this procedure for each port circuit pack in the port network until the problem is resolved or until all circuit packs in the port network have been tried. To execute diagnostic procedures on the Expansion Interface and Tone/Clock circuit packs, refer to Procedure 3. Although these circuit packs reside in purple slots, procedure 2 does not apply. This procedure *does* apply to the Tone Detector circuit pack.

If the TDM Bus problem is present when the circuit pack is inserted, but is resolved when the circuit pack is removed, either the circuit pack or the backplane pins in that slot are causing the problem. If the backplane pins are intact, replace the circuit pack. If some of the tests fail regardless of whether the circuit pack is inserted or removed, and the backplane pins are intact, the circuit pack is not the cause of the problem. In a multiple failure situation, the circuit pack could be one cause of the TDM Bus problem. However, other simultaneous failures might also be responsible for TDM Bus faults. In Procedure 2, an option of working either with one circuit pack at a time or with multiple circuit packs simultaneously is available. In view of this capability, determine the level of service interruption that will be acceptable during the procedure. If causing a disruption to all users in the port network is deemed permissible, large groups of circuit packs should be worked with in order to get the job done quickly. However, *if large service disruptions are to be avoided*, work with one circuit

pack at a time. This option is slower, but it disrupts only the users of a single circuit pack.

1. Remove one or several circuit packs as appropriate. Any circuit packs that reside on the TDM Bus that have been recently inserted should be checked first.

   If you decide to remove multiple circuit packs, consider working with an entire carrier at a time to more quickly and reliably determine which circuit packs are *not* the source of trouble.

2. Run *test tdm P* to determine if the TDM Bus fault is still present.

3. If any of the TDM Bus tests fail:

   - Determine if the backplane pins in the removed circuit pack's slot appear to be bent.
   - If the backplane pins are not bent, reinsert the circuit pack(s), and perform Procedure 2 for the next set of circuit packs.
   - If the backplane pins are bent, remove power to this carrier in the manner described previously.
   - Straighten or replace the pins and reinsert the circuit pack.
   - Restore power and repeat Procedure 2, beginning with Step 2, for the same circuit pack(s).

4. If none of the TDM Bus tests fail:

   - Reinsert the circuit pack(s) *one at a time,* and repeat the following substeps until all of the circuit packs have been reinserted.
   - Run **test tdm P** to determine if the TDM Bus fault has returned.
   - If any of the TDM Bus tests fail, the reinserted circuit pack is defective. Replace this circuit pack and repeat this procedure for the next circuit pack.
   - If none of the TDM Bus tests fail when all of the circuit packs have been reinserted, the problem has been fixed and the procedure is completed.

Continue with Procedure 3 if all the port circuit packs have been checked, but the TDM Bus fault is still not resolved.

Procedure 3

This procedure removes and reinserts SPE and EPN control circuit packs, as listed in the table at the beginning of this section. In the PPN processor carrier (SPE), the TDM Bus terminates on slots 11-15. When running diagnostics in the PPN, the following circuit packs should be tested:

- TN1655 Packet Interface (three slots available per carrier)
- TN768/TN780 Tone/Clock

- UN332 MSSNET
- TN570 Expansion Interface

Although the Packet Interface circuit pack does not communicate over the TDM bus, the bus does terminate at those slots. TDM Bus failures could be caused by bent backplane pins.

When running TDM Bus diagnostics in an EPN, the following circuit packs should be tested with this procedure:

- TN570 Expansion Interface
- TN768/TN780 Tone/Clock

When using this procedure on an EPN, the Tone/Clock circuit pack should be the next-to-last one checked. The Expansion Interface circuit pack (TN570) should be the last one checked, since removing this circuit pack disconnects its EPN. In a system with duplicated PNC, disruption of traffic can be minimized by following the procedure for the standby TN570 Expansion Interface circuit pack, then entering a **reset pnc interchange**. The formerly active Expansion Interface will now be standby and can be checked without affecting service to the EPN.

At steps in the procedure that require the removal and/or replacement of circuit packs, refer to the Maintenance Object documentation for the given circuit pack for instructions. SPE and/or PNC interchanges may be required to complete these steps with the least amount of service disruption.

Procedure for PPN with Simplex SPE or EPN with Simplex PNC

1. Remove the suspect circuit pack.
2. As in Procedure 2, determine if the backplane pins in the removed circuit pack's slot are bent.
3. If the backplane pins are bent, do the following:
   a. Power down the control carrier as described in the previous warning statement.
   b. Straighten or replace the pins.
   c. Insert the same circuit pack.
   d. Turn the power back on to reboot the system or to restart the EPN.
   e. Run **test tdm P** to determine if the TDM Bus fault still exists.
   f. If none of the TDM Bus test fail, the procedure is complete.
   g. If some of the TDM Bus tests fail, replace the suspect circuit pack and go to step 6.
4. If the backplane pins are not bent, replace the circuit pack.
5. Turn the power back on to reboot the system.

6. Run **test tdm P** to determine if the TDM Bus fault is still present. If none of the TDM Bus tests fail, the procedure is completed.
7. If the TDM Bus fault is still present, the suspect circuit pack was not the cause of the TDM Bus failure. Do the following:
   a. Remove the replacement circuit pack that was just inserted and replace it with the previously suspected circuit pack.
   b. Repeat Procedure 3 for the next circuit pack on the list for this procedure.

If Procedure 3 fails to identify the cause of the problem, go to Procedure 4.

Procedure for PPN with Duplicated SPE or EPN with Duplicated PNC

In this type of configuration, the test procedure is made up of several independent parts. In a duplicated system it is desirable to investigate whether or not circuit packs are causing problems on the TDM Bus when they are in active mode or when they are in standby mode or both. The procedure utilizes SPE interchange in the PPN, or a PNC interchange in the EPN. If the TDM Bus fault disappears after the interchange takes place, the newly standby MSSNET (PPN), or Expansion Interface (EPN), is suspect and should be replaced. If the problem still exists, the Tone/Clocks are then interchanged. If the TDM Bus failure then disappears, the newly standby Tone/Clock is suspect and should be replaced. If the TDM Bus problem still exists, then the procedure begins diagnostics on individual circuit packs and backplane pins.

Part 1 (PPN Procedure)

1. If performing this procedure for a PPN carrier, execute **status port-network** to determine which SPE is currently active. Run **reset system interchange** to make the currently active SPE standby.
2. Run **test tdm P** to determine if the TDM Bus fault is still present.
3. If the TDM Bus fault is gone, replace the formerly active MSSNET circuit pack.
4. Run **reset system interchange** again to get the new MSSNET circuit pack on the active SPE.
5. Run **test tdm P** to determine if the TDM Bus fault is still present.
6. If the TDM Bus fault is still present, replace the new MSSNET circuit pack with the original suspect circuit pack, and continue on to Part 3.
7. If the TDM Bus fault has disappeared, the procedure is complete.

Part 2 (EPN Procedure)

1. If doing this procedure for an EPN carrier, execute the **status pnc** command to determine which PNC is currently active. Run **reset pnc interchange** to make the currently active PNC standby.

2. Run **test tdm P** to determine if the TDM Bus fault is still present.
3. If the TDM Bus fault is gone, replace the formerly active Expansion Interface circuit pack.
4. Run **reset pnc interchange** again to make get the new Expansion Interface circuit pack on the active SPE.
5. Run **test tdm P** to determine if the TDM Bus fault is still present.
6. If the TDM Bus fault is still present, replace the new Expansion Interface circuit pack with the original suspect circuit pack, and continue on to Part 3.
7. If the TDM Bus fault has disappeared, the procedure is complete.

Part 3

1. Run **set tone-clock** to make the currently active Tone/Clock standby.
2. Run **test tdm P** to determine if the TDM Bus fault is still present.
3. If the TDM Bus fault is gone, replace the formerly active Tone/Clock circuit pack.
4. Run **set tone-clock** again to make the new Tone/Clock circuit pack active.
5. Run **test tdm P** to determine if the TDM Bus fault is still present.
6. If the TDM Bus fault is still present, replace the new Tone/Clock circuit pack with the original suspect circuit pack, and continue on to Part 4.

Part 4

Part 4 should be used for each individual circuit pack as listed in the previous . Run this procedure on all circuit packs on the standby SPE or standby PNC. If the TDM Bus failure still exists once the standby circuit packs have all been tested, execute either **reset system interchange** (PPN) or **reset pnc interchange** (EPN), followed by **set tone-clock** to get the currently active circuit packs into standby mode so that this procedure can be run on each of them.

1. Remove the inactive suspect circuit pack.
2. As in Procedure 2, determine if the backplane pins in the removed circuit pack's slot are bent.
3. If the pins are bent, do the following:
    a. Remove power as described in the previous warning statement.
    b. Straighten or replace the pins.
    c. Restore power.
    d. Run **test tdm P** to determine if the TDM Bus fault is still present.
    e. If the TDM Bus failure is still present, the problem is with another circuit pack. Reinsert the original suspect circuit pack and continue with Part 4 for the next circuit pack.

f. If the TDM Bus failure has disappeared, reinsert the circuit pack and run the **test tdm P** command to see if the TDM Bus failure is still present.

   If any of the TDM Bus tests fail, replace the suspect circuit pack. The procedure is complete.

   If none of the TDM Bus test fail, the procedure is complete.

4. If the backplane pins are not bent, run the **test tdm P** command to determine if the TDM Bus fault is still present.

   command to determine if the TDM Bus fault is still present.

   a. If any of the TDM Bus tests fail, the problem is with another circuit pack. Reinsert the original suspect circuit pack and continue with Part 4 for the next circuit pack.

   b. If none of the TDM Bus tests fail, replace the suspect circuit pack. The procedure is complete.

5. If all standby circuit packs have been tested, and the TDM Bus failure still exists, execute the **reset system interchange** (PPN) or the **reset pnc interchange** commands (EPN), and the **set tone-clock** command to get the currently active circuit packs into standby mode. Continue with Part 4 of this procedure for each of the newly active circuit packs.

Procedure 4

Procedure 4 attempts to isolate the TDM Bus failure to a particular set of carriers. Only the circuit packs in selected carriers are checked. Procedure 4 is used if the preceding procedures fail, because it can help locate multiple circuit pack failures and failures of the carrier hardware itself.

In this procedure, the TDM/LAN Cable Assemblies and TDM/LAN Bus terminators are replaced. If this action does not resolve the TDM Bus fault, the carriers are reconfigured so that certain carriers are disconnected from the TDM Bus. This is done by moving the TDM/LAN Bus terminators (ZAHF4) on the carrier backplane. To terminate a TDM Bus at the end of a particular carrier, the TDM Bus cable that connects the carrier to the next carrier should be unplugged and replaced with the TDM/LAN Bus terminator (see Figure 9-119 below). When the length of the TDM Bus is modified the circuit packs that are essential to the system operation and TDM Bus maintenance (for example, MSSNET and Tone/Clock), must still be connected to the new *shortened* TDM Bus.

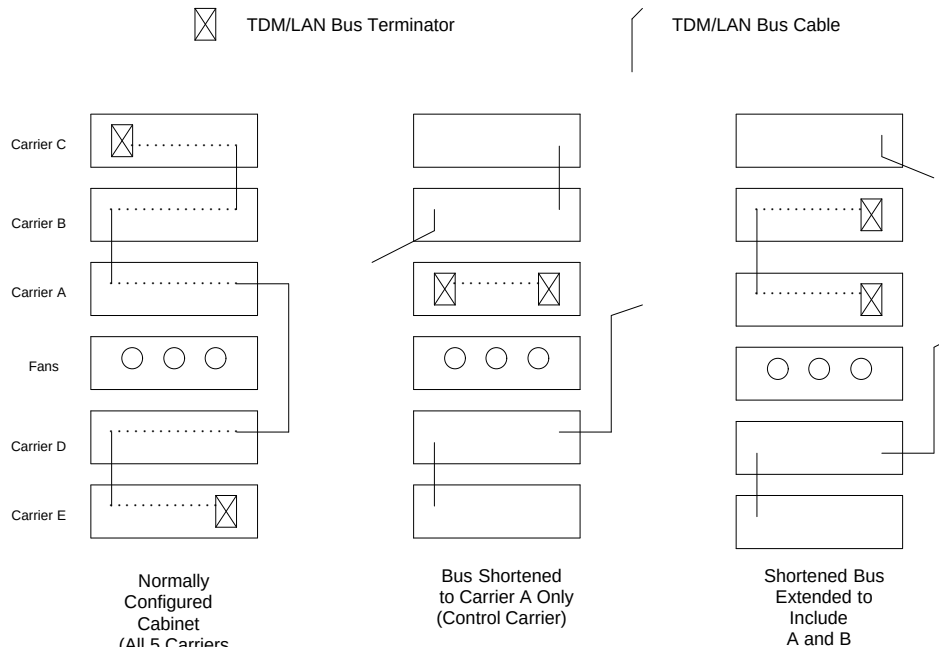

Figure 9-119. Carrier Rewiring Example—Rear View of Five-Carrier Cabinet

After cabling changes are made and verified, power must be restored to the port network. Circuit packs in carriers that are not part of the shortened bus are not inserted. As a result, these circuit packs are alarmed. Ignore these alarms for now. All alarms should be resolved when the cabinet is restored to its original configuration.

Procedure 4 is organized into two parts. Part 1 attempts to clear the TDM Bus fault by replacing all the bus cabling and terminators within a port-network. Part 2 attempts to isolate the fault to a particular carrier by extending the TDM Bus from the control carrier to additional carriers one at a time.

WARNING:

Power must be removed from the entire port network before any cables or terminators are removed. Failure to follow this procedure can cause damage to circuit packs and power supplies, and can be hazardous to the technician.

Part 1

1. If spare TDM/LAN Cable assemblies and TDM/LAN Bus Terminators are not available, go to Part 2 of this procedure.

2. Power down the port network.
3. Replace all of the TDM/LAN Cable Assemblies and both TDM/LAN Bus Terminators.
4. Restore power to the port network.
5. Run the **test tdm P** command to determine if the TDM Bus fault is still present.

   command to determine if the TDM Bus fault is still present.
6. If the TDM Bus fault is resolved, the procedure is completed. Otherwise, go to Part 2.

Processor Port Network:

1. Terminate the TDM Bus so that it extends only across the Active SPE control carrier.
2. Determine if the TDM Bus fault is still present by running the **test tdm P** command. While the TDM bus is extended only across SPE control carriers the non-control channel test (#297) will not run on the non-control channel because of the absence of a Tone Detector on the shortened bus. After the TDM Bus tests are run once, run the **set tdm PC** command to move the control channel to the non-active bus (the **status port-network P** command will show which bus is currently active). After the bus switch has occurred, run the

   command will show which bus is currently active). After the bus switch has occurred, run the **test tdm P** command again to determine if the newly active bus is faulted.
3. If none of the TDM Bus tests fail, extend the TDM Bus to another carrier. If that carrier is an SPE control carrier, repeat this procedure beginning at step 2. If the carrier is not an SPE control carrier, the **test tdm P** command only needs to be executed once since there is now a Tone Detector present on the bus and both the control and non-control channels will be tested in one test sequence.
4. If some of the TDM Bus tests fail, and since Procedures 2 and 3 have not resolved the problem, the added carrier(s) are defective and must be replaced.

Expansion Port Networks:

1. Terminate the TDM Bus so that it extends only across the carrier that contains the Active Expansion Interface.
2. Determine if the TDM Bus fault is still present by running the **test tdm P** command.

   If the *shortened* TDM Bus does not extend to a carrier that contains the Tone Detector circuit pack, the non-control channel test (#297) will not be able to run and the bus that the non-control channel was on will not be tested. If this is the case, run the **set TDM PC** command to move the

control channel to the non-active Bus. The **status port-network P** command will show which Bus is currently active. After the Bus switch has occurred, run the **test tdm P** command again to determine if the newly active Bus is faulted.

Another option in an EPN is to move a Tone Detector circuit pack to an empty slot (if one is available) in the carrier where the TDM bus is terminated. This would allow both the control channel and non-control channel tests to run and would not require that the **set tdm P** command be run.

3. If none of the TDM Bus tests fail, extend the TDM Bus to another carrier, and repeat the procedure in the previous step. When a carrier that causes the fault to recur is added, perform Procedure 2 for only the circuit packs in that carrier.
4. If any of the TDM Bus test fail, and Procedures 2 and 3 have not resolved the problem, the added carrier(s) are defective and must be replaced.

If the TDM Bus problems are still not resolved, escalate the problem.

Restarting Non-functioning Port Circuit Packs

A defective TDM Bus Control Channel or system timing reference on one of the networks can result in port circuit packs (those not on a control carrier) on this port network entering the reset state. When this situation occurs, the circuit pack will stop functioning and its red LED will light. The system will not detect the presence of a circuit pack when the circuit pack is in the reset state. Hence, executing the **list config board** command will indicate that the circuit pack is not present.

If a circuit pack enters the reset state it will remain out of service until it receives a restart message form the control channel on the same TDM Bus, A or B, that was active when it reset, or until it is powered up again.

To force the system to send a restart message to all circuit packs on a network, try one of the following methods, depending on the circumstances. A circuit pack that is functioning normally (is not in the reset state) will ignore the restart message.

Procedure 1 (Non-destructive)

Execute the Idle Time Slot Test (#294) by issuing the command **test tdm P** when the control channel is on the same TDM Bus as it was when the circuit pack entered the reset state.

Procedure 2 (Non-Destructive)

If you are at the site, reseat the circuit pack. This action will cause the circuit pack that was in the reset state to begin functioning on the *current* Control Channel bus.

Procedure 3 (Destructive)

Reset the port network that contains the circuit pack that is in the reset state. When a network is reset, two restart messages, one on the control channel of each TDM Bus, are sent to each circuit pack on the network. *To reset an EPN only*, execute the **reset port-network** *P* **level 2** command. *Resetting the EPN will disrupt all calls going to and originating from the EPN.*

Procedure 4 (Destructive)

Execute the **recycle carrier** *PC* command. *This command will remove and return power to the designated port carrier. Thus, any other circuit packs on this carrier will also be temporarily taken out-of-service.*

Hardware Error Log Entries and Test to Clear Values

TDM Bus Error Log Entries					
Error Type	**Aux Data**	**Associated Test**	**Alarm Level**	**On/Off Board**	**Test to Clear Value**
0	0	Any	Any	Any	test tdm P
1	0	Control Channel Test (#296)	MINOR	ON	test tdm P r 3
18(a)	0	busyout tdm PC	WARNING	ON	release tdm PC
35(b)	0-1	TDM Bus Corruption	MINOR	ON	set tdm PC
257(c)	0	None	MAJOR	ON	
513(d)	Any	Idle Time Slot Test (#294)	MINOR	ON	test tdm P r 3
769(e)	Any	Idle Time Slot Test (#294)	WARNING	ON	test tdm P r 3
769(f)	Any	Idle Time Slot Test (#294)			(see Notes)
1025(g)	Any	None			
3872(h)	Any	None			
3873(h)	Any	None			
3874(h)	Any	None			
3877(h)	Any	None			

Notes:

a. The TDM Bus has been busied out by the technician. The error will retire when the technician releases the TDM Bus.

b. This error indicates the TDM Bus is corrupted. If the corruption was on the Control Channel bus, TDM Bus maintenance will automatically switch the control channel and/or tones to the other bus. The same strategy applies if the corruption was on the bus carrying the tones.

   An aux data value of 0 indicates the last reported TDM Bus corruption was on the Control channel bus.

   An aux data value of 1 indicates the last reported TDM Bus corruption was on the Non-Control channel bus.

   If this error is logged on both TDM Buses (A and B) on the PPN within two or three minutes, the red LED of several circuit packs may or may not be lit and there could be Switch Control (SW-CTL) errors. Under these circumstances do the following:

   - Display the Hardware Error Log via the **display errors** command and look for SW-CTL (Switch Control) errors.

- If there are any errors logged against the Switch Control, try to resolve them.
- Test the TDM Bus via the **test tdm P** command.
- If all the TDM Bus tests pass, the problem has been fixed.
- If not all the TDM Bus tests pass, escalate the problem.

c. This error indicates the TDM Bus was switched to the other bus due to TDM Bus corruption. The aux data value is not meaningful and no action is required. Look for other TDM-BUS errors to determine the cause of this error.

d. This error indicates that some time slots are corrupted in the specified TDM Bus. The Minor alarm is raised when there are more than 50 bad time slots in the bus. The aux data indicates the number of bad time slots found by the test.

e. This error indicates that some time slots are corrupted in the specified TDM Bus. The Warning alarm is raised when there are more than 10 bad time slots but less than or up to 50 bad ones in the bus. The aux data value indicates the number of bad time slots found by the test.

f. This error indicates the idle time slot test found less than 10 bad time slots in the TDM Bus. The aux data value indicates the number of bad time slots found by the test. There is no alarm associated with this error.

g. This error indicates that the daily TDM Bus switch was not successful. The Switch Control (PPN) or Active Expansion Interface (EPN) cannot talk on the bus that software was trying to switch into. There is no alarm associated with this error.

h. These errors indicate communication problems which may be causing message loss. TDM Bus maintenance may switch the Control Channel bus and/or Tone bus to the other bus. Test the TDM Bus via the **test tdm P** command and follow the procedures according to the error codes reported from the test. The aux data value shows the Angel id number for which a downlink message was lost.

Technician-Demanded Tests: Descriptions and Error Codes

Always investigate tests in the order presented in the table below when inspecting errors in the system. By clearing error codes associated with the *Control Channel Test*, for example, you may also clear errors generated from other tests in the testing sequence.

Order of Investigation	Short Test Sequence	Long Test Sequence	D/ND*
Control Channel Test on the Control			
Channel Bus (#296)	X	X	ND
Digit Detection Test on the Non-Control Channel Bus (#297)	X	X	ND
Idle Time Slot Test (#294)	X	X	ND

* D = Destructive; ND = Nondestructive

Idle Time Slot Test on TDM Bus A or B (#294)

The Idle Time Slot Test detects noisy time slots on the bus and takes them out-of-service. The Tone Detector circuit pack is told to listen to idle time slots and if it detects any noise on a time slot, it returns a failure. At the end of the test, any out-of-service time slots are retested to see if they are still noisy and restored to service if they are idle. After all the time slots have been tested, maintenance counts the number of bad time slots and reports the number to the technician in the error code field. No more than 220 time slots will be taken out-of-service on one bus and no more than 300 will be taken out-of-service on both buses at one time.

Table 9-373. TEST #294 Idle Time Slot Test on TDM Bus A or TDM Bus B

Error Code	Test Result	Description/ Recommendation
None	ABORT	Could not allocate the necessary system resources to run this test. For example, maintenance could be running on the Tone Detector circuit pack and it is using the CPTRs.
1115	ABORT	Could not allocate the necessary system resources to run this test. 1. Retry the command at one-minute intervals for a maximum of three times. 2. If the test continues to abort, escalate the problem.

Continued on next page

Table 9-373. TEST #294 Idle Time Slot Test on TDM Bus A or TDM Bus B — *Continued*

Error Code	Test Result	Description/ Recommendation
Any	FAIL	The error code indicates the number of bad time slots that were detected. The cause of this failure is most likely due to a bad port circuit pack and not the TDM Bus itself. 1. Execute the command again. 2. If the error persists, check the Error and Alarm Logs for alarms, on the port network where the faulted TDM Bus resides, on port circuit packs from the NPE Crosstalk Test. Also check for EXP-INTF alarms associated with error type 1537. 3. Refer to the appropriate circuit pack's documentation to clear the circuit pack's problem. 4. Test the TDM Bus again. If the error continues, refer to the ''TDM Bus Fault Detection and Isolation Procedure'' described earlier.
	PASS	The success of this test indicates all the idle time slots that are supposed to be idle are indeed idle. There is no noise on any of the idle time slots.

Control Channel Test (#296)

This tests the integrity of the Control Channel bus by ensuring that communication through the TDM Bus is operational. The test attempts to query a circuit pack whose presence is required in each port network for proper operation (Tone/Clock or Tone Detector). If a reply from the queried circuit pack is received, the TDM Bus is considered operational and the test passes. If no reply is received, the Bus is not operational and the test fails.

Table 9-374. TEST #296 Control Channel Test

Error Code	Test Result	Description/ Recommendation
Any other than 1005	ABORT	Internal System Error. 1. Retry the command at one-minute intervals for a maximum of three times. 2. If the test continues to abort, escalate the problem.
1005	ABORT	Since this test is valid only on the control channel bus, it aborts execution when run on the non-control channel bus. This is a valid response. Use the **status port-network** command to verify which bus is the control channel bus.

Continued on next page

Table 9-374. TEST #296 Control Channel Test — *Continued*

Error Code	Test Result	Description/ Recommendation
None	FAIL	Communication through the Control Channel is not working. The problem is not necessarily the TDM Bus itself. 1. Display the hardware error and alarm log for the Tone-Clock circuit pack and for the Tone Detector circuit pack in the port network where the faulted TDM Bus resides. Refer to Maintenance documentation for TONE-BD (Tone-Clock Circuit Pack), TONE-PT (Tone Generator), GPTD-PT (General Purpose Tone Detector Port), and DTMR-PT (Dual Tone Multi-Frequency Port). 2. Resolve the errors and alarms for the Tone-Clock and Tone Detector circuit packs. 3. If the faulted TDM Bus is in the PPN, display the hardware error and alarm log and look for SW-CTL errors and alarms. 4. If the faulted TDM Bus is on the EPN, display the hardware error and alarm log and look for errors and alarms for the active Expansion Interface circuit pack. Refer to EXP-INTF (Expansion Interface Circuit Pack) Maintenance documentation and resolve its errors. 5. Execute the **test tdm P** command again. 6. If the test still fails, refer to the ''TDM Bus Fault Detection and Isolation Procedure'' described earlier.
	PASS	Communication through the control channel bus is operational.

Digit Detection Test (#297)

This test is executed on the Non-Control Channel bus. The Tone-Clock circuit pack is told to put a tone on the Non-Control Channel bus and the Tone Detector circuit pack is told to listen to it. The test passes if the tone is successfully transmitted on the Non-Control Channel bus.

Table 9-375. TEST #297 Digit Detection Test

Error Code	Test Result	Description/ Recommendation
None 1001 2100	ABORT	Could not allocate the necessary system resources to run this test.
1005	ABORT	Since this test is valid only on the non-control channel bus, it aborts execution when run on the control channel bus. This is a valid response. Use the **status port-network** command to verify which bus is the control channel bus.
2000	ABORT	Response to the test request was not received within the allowable time period. 1. Retry the command at one-minute intervals a maximum of three times. 2. If the test continues to abort, escalate the problem.
None	FAIL	This failure indicates that communication on the Non-Control Channel is not reliable. 1. Execute the command again. 2. If the problem persists, test the active Tone-Clock circuit pack and Tone Detector circuit pack in the port network where the faulted TDM Bus resides, to make sure they are healthy. Refer to TONE-BD (Tone-Clock Circuit Pack), TONE-PT (Tone Generator), GPTD-PT (General Purpose Tone Detector Port), and DTMR-PT (Dual Tone Multi-Frequency Port). 3. Execute the command again. 4. If the problems persists, refer to the ‘‘TDM Bus Fault Detection and Isolation Procedure’’ described earlier.
	PASS	The non-control channel bus is operational.

TDM-CLK (TDM Bus Clock)

MO Name As It Appears In Alarm Log	Alarm Level	Initial System Technician Command To Run (a)	Full Name of MO
TDM-CLK	MAJOR	test tone-clock UUC short	TDM Bus Clock
TDM-CLK	MINOR	test tone-clock UUC short	TDM Bus Clock
TDM-CLK	WARNING	release tone-clock UUC	TDM Bus Clock

a. UU is the universal cabinet number (1 for PPN, 2 -44 for EPNs). C is the carrier designation (A, B, C, D, or E).

NOTE:
Replacing the tone/clock circuit pack requires a special procedure described in the documentation for TONE-BD. That section also describes the LED displays for this board.

The Time Division Multiplex (TDM) Bus Clock resides on the Tone-Clock circuit pack, providing clocking signals both for the TDM Bus and the LAN Bus. The Tone-Clock circuit pack is a critical component in the system and is necessary to ensure the operation of all port circuit packs in the system. The TDM busses of the Processor Port Network (PPN) and any Expansion Port Networks (EPNs) are synchronized together. The system timing reference can be derived internally from the Tone-Clock circuit pack in any PN, or from an external (off-board) timing reference. Currently, the TDM Bus Clock supports synchronizing the TDM Bus with interface rates from Digital Signal 1 (DS1) facilities as primary or primary and secondary references, and from Stratum 3 Clock (STRAT-3) facilities. Only the TN780 tone-clock supports a Stratum 3 clock.

Moreover, the Tone-Clock circuit pack aids in monitoring and selecting synchronization references. The Tone-Clock circuit pack, after detecting that the external source of timing is not valid, will automatically begin its escalation procedure, according to the facilities administered. In Table 9-376, successive losses of signal cause escalation from left to right.

NOTE:
Switching back to a DS1 source is handled by synchronization maintenance, once any problems with it have been corrected and tested. However, once synchronization has been switched to the internal timing source of the master Tone-Clock circuit pack, *switching back to a Stratum 3*

Clock must be initiated by a technician after the external reference has been repaired.

Table 9-376. Synchronization Source Escalation Strategy

Tone-Clock Role	Synchronization Facilities	Initial External Synchronization Source	Backup External Synchronization Source	Internal Source
MASTER	Stratum 3 Clock	Source "A"	Source "B"	Local oscillator
	DS1 Primary and Secondary	DS1 Primary	DS1 Secondary	
	DS1 Primary Only	DS1 Primary	None	
	No External Source	None	None	
SLAVE	PNC Duplication	Active EI	Standby EI	
	No PNC Duplication	Active EI	None	

See Synchronization (SYNC) Maintenance documentation for more details of the escalation plan. *There exists a strong interdependency among the DS1 Interface circuit pack Maintenance, Synchronization Maintenance, and TDM Bus Clock Maintenance MOs*.

See the section on TONE-BD Maintenance in this manual for a discussion of the relationship of Tone-Clock circuit packs with the various Reliability Options.

Hardware Error Log Entries and Test to Clear Values

TDM Bus Clock Error Log Entries					
Error Type	**Aux Data**	**Associated Test**	**Alarm Level**	**On/Off Board***	**Test to Clear Value**
0†	0	Any	Any	Any	test tone-clock UUC sh r 1
1(a)	0	None	MINOR	OFF	
18(b)	0	busyout tone-clock UUC	WARNING	OFF	release tone-clock UUC
130(c)		None			
257(d)		None	WARNING	OFF	
513(e)	Any	Clock Circuit Status Inquiry (#148)	MINOR‡	OFF	test tone-clock UUC
769(f)	Any	Clock Circuit Status Inquiry (#148)	MAJOR‡	ON	test tone-clock UUC sh r 10
1025(g)	Any	Clock Slip Inquiry(#149)			test tone-clock UUC sh
1281(h)	Any	None	MINOR	OFF	
1537	Any	Clock PPM Inquiry(#150)			test tone-clock UUC sh
2049(i)		Standby Reference Health Check Test(#651)	MAJOR‡	ON	test tone-clock UUC
2305(j)	0	None	WARNING	OFF	

* As a general rule, any *on board* errors against the TDM Bus Clock should be resolved before pursuing any other errors against SPE or PNC components. *Off board* clock errors may be caused by other board errors, and should usually be addressed once any on board errors have been resolved.

† Run the Short Test Sequence first. If all tests pass, run the Long Test Sequence. Refer to the appropriate test description and follow the recommended procedures.

‡ Major or Minor alarms on this MO may have been downgraded to Warning alarms based on the values used in the **set options** command.

Notes:

a. The Tone-Clock circuit pack may have a clock at the edge of its specified frequency. This can cause Expansion Interface circuit packs and SNI circuit packs to go out-of-frame or report no-neighbor conditions. This can is turn cause EPNs, Expansion Archangel Links (EALs), Remote Neighbor Links (RNLs), and/or Local Neighbor Links LNLs) to go down. When this error is alarmed, Clock Health Inquiry Test (#46) will fail with an error code of 1.

   1. Replace the Tone-Clock circuit pack identified in the error log. See "How to Replace the Tone-Clock Circuit Pack" on page T-152 in the TONE-BD section.

   2. If the error persists, follow normal escalation procedures.

b. The indicated Tone-Clock circuit pack has been made unavailable via the **busyout tone-clock UUC** command. It only applies to systems which have the High or Critical Reliability Option administered, because only a standby Tone-Clock circuit pack may be made busy by that command. To resolve this error, execute the **release tone-clock UUC** command for the alarmed circuit pack.

c. This error type indicates that the circuit pack has been removed or has been insane for more than 11 minutes. To clear the error, reinsert or replace the circuit pack.

d. The Tone-Clock circuit pack in the PPN is not a TN780 while a Stratum 3 synchronization is administered. Replace the Tone-Clock in the PPN with a TN780, or change synchronization administration to Stratum 4 if a Stratum 3 clock is not being used.

e. The tone-clock has reported an out-of-lock condition. A aux value of 1 indicates this error is an out-of-lock with the primary reference. A aux value of 2 indicates this error is an out-of-lock with the secondary reference. It could not lock onto the frequency of that synchronization reference. This will lead to a change in the synchronization reference if the condition continues.

f. The Tone-Clock circuit pack may be defective.

   1. **If this error was logged against an Active Tone-Clock circuit pack**, then test that circuit pack via the **test tone-clock UUC**. If there are error codes from any tests, follow the recommended maintenance procedures for the error code(s) to resolve the problem(s). If all tests pass, consider the 769 error type to have been a transient problem, and clear the error log entry with **test tone-clock UUC long clear**.

   2. If this error was logged against the Standby Tone-Clock circuit pack, and if the Aux Data value was 18369, Synchronization maintenance acts on this error. No corrective action is required. For all the other Aux Data values, replace the Standby Tone-Clock circuit pack. Refer to the TONE-BD section on ‘‘How to Replace the Tone-Clock Circuit Pack’’.

3. If the error persists, follow normal escalation procedures.

g. Tone-Clock circuit pack on-board maintenance has detected one or more *clock slips*, timing differences between its internal reference source and the synchronization signal provided by the master Tone-Clock. Although no clock slip errors are expected during normal operation, both manual and automatic interchanges of Tone-Clock circuit packs, synchronization references, and PNCs, may result in clock slip counts.

   If error 1281 also is logged for the same Tone-Clock circuit pack, it is related to this problem, and should be corrected first. Otherwise, continue with the procedure below.

   1. Use **test tone-clock UUC**, and examine the results of test #149 to see if slip errors are still occurring. If no new slip errors are reported, and if these errors are not causing a TDM-CLK alarm, they may be ignored. Use **test tone-clock UUC long clear** to clear the errors.
   2. Otherwise, enter the **display errors** command, and follow corrective procedures for any other TDM-CLK, TONE-BD, SYNC, DS1C-BD, EXP-INTF, SNC-BD, and SNI-BD errors logged, except for those in the following table.

Error Log Entries for Slip Errors

Circuit Pack Name	Error Log Name	Error Log Entry for Slips
DS1 Interface	DS1-BD	3073 to 3160
Expansion Interface	EXP-INTF	2305
Switch Node Interface	SNI-BD	1537
Tone-Clock	TDM-CLK	1025
UDS1 Interface	UDS1-BD	3073 to 3160
DS1C Circuit Pack	DS1C-BD	3329

   3. If 1025 errors persist, refer to SYNC Maintenance in this manual and follow the procedures in the "Approach to Troubleshooting" section. If this still does not resolve the error, follow normal escalation procedures.

h. This error is an indication that the Tone-Clock circuit pack has detected a loss of timing signal from the system synchronization reference. The Tone-Clock circuit pack has switched synchronization references, according to the strategy described in Table 9-376 on page T-79.

   1. Resolve any errors logged against SYNC or STRAT-3.
   2. Refer to SYNC Maintenance, the "Approach to Troubleshooting" section, if the error is not resolved by the first step.
   3. If the error persists, follow normal escalation procedures.

i. The tone-clock circuit pack in the master port network was unable to detect the incoming synchronization signal, but the other tone-clock was able to detect the references. The system should switch clocks in this situation.

   1. If this error is against a PPN clock board and the system is using a Stratum 3 clock, check the cabling that brings the stratum 3 signal to this clock board.
   2. Replace the current standby Tone-Clock circuit pack. See "How to Replace the Tone-Clock Circuit Pack" on page T-152 in the TONE-BD section.
   3. If the error persists, follow normal escalation procedures.

j. The indicated active Tone-Clock circuit pack, which is on a port network that does not contain the system synchronization reference (a **slave** Tone-Clock), has detected a loss of timing signal from its EXP-INTF synchronization source.

   1. Enter **display errors** and **display alarms**, and follow the associated repair procedures for EXP-INTF, TDM-CLK, and TONE-BD error log entries that have on-board alarms.
   2. If the 2305 errors persist, follow the repair procedures for EXP-INTF error log entries 257, 769, or 770, or any errors logged agains SNI-BD, SNC-BD, or FIBER-LK.
   3. If the 2305 errors persist:

      a. *For Port Networks with more than one Tone-Clock circuit pack*, execute the command test synchronization r 10, and check to see if new 2305 errors against TDM-CLK were reported. If not, execute reset PNC interchange and then test synchronization r 10 again, and recheck for new 2305 errors against TDM-CLK

      b. *For Port Networks with a single Tone-Clock circuit pack*, execute the command test synchronization r 10, and check to see if new 2305 errors were reported.

      If no new instances of the 2305 errors were logged for either test, then enter **test tone-clock UUC long clear** to clear the TDM-CLK errors and the procedure is complete.

   4. For Port Networks with more than one Tone-Clock circuit pack, interchange Tone-Clocks with the **set tone-clock UUC**, then run **test synchronization r 10**, and check to see if new 2305 errors are reported against the new active Tone-Clock circuit pack. If not, replace the standby Tone-Clock circuit pack. See "How to Replace the Tone-Clock Circuit Pack" on page T-152 in the TONE-BD section. If this clears the error, the problem has been resolved.
   5. Replace the EI circuit pack for the active PNC. In the direct-connect case, use the **list fibers** command to identify which active EI connects with the PPN.

6. If the problem is still not cleared, and the Tone-Clock circuit pack reported in the error log has not been replaced up to now, replace it. See "How to Replace the Tone-Clock Circuit Pack" on page T-152 in the TONE-BD section.
7. If the problem persists, follow normal escalation procedures.

System Technician-Demanded Tests: Descriptions and Error Codes

Always investigate tests in the order presented in the table below when inspecting errors in the system. By clearing error codes associated with the *SAKI Reset Test* for example, you may also clear errors generated from other tests in the testing sequence.

Order of Investigation	Short Test Sequence	Long Test Sequence	Reset Board Sequence	D/ND*
SAKI Reset Test (#53) (a)		X		D
Clock Health Test (#46) (b)	X	X		ND
Control Channel Loop Around Test (#52) (a)	X	X		ND
Tone Generator Crosstalk Test (#90) (c)		X		ND
Tone Generator Transmission Test (#40) (c)	X	X		ND
Tone Generator Audit/Update Test (#41) (c)	X	X		ND
TDM Bus Clock Circuit Status Inquiry Test (#148)	X	X		ND
TDM Bus Clock Slip Inquiry Test (#149)(e)	X	X		ND
TDM Bus Clock PPM Inquiry Test (#150)	X	X		ND
TDM Bus Clock Parameter Update Test (#151)	X	X		ND
Board Type Check Test (#574)	X	X		ND
Standby Reference Health Check Test (#651) (d)		X		ND

* D = Destructive; ND = Nondestructive

Notes:

a. Refer to XXX-BD (Common Port Circuit Pack) Maintenance documentation for descriptions of these tests.

b. Refer to TONE-BD (Tone-Clock Circuit Pack) documentation for a description of this test.

c. Refer to TONE-PT (Tone Generator) documentation for descriptions of these tests.

d. This test only runs on the Standby Tone-Clock circuit pack in a Port Network with more than one Tone-Clock circuit pack (High or Critical Reliability Option). The circuit pack must be a TN780 code with firmware revision 2 or above, or be a TN2182.

e. Test #149 is not run on the TN2182.

TDM Bus Clock Circuit Status Inquiry Test (#148)

The TDM Bus Clock circuitry is checked for sanity. Any problems that are found are reported via error codes

Table 9-377. TEST #148 TDM Bus Clock Circuit Status Inquiry Test

Error Code	Test Result	Description/ Recommendation
None 1001	ABORT	The system could not allocate the necessary resources for the test. 1. Wait 1 minute, and retry the test. 2. If the test continues to abort, follow normal escalation procedures.
2000	ABORT	Response to the test request was not received within the allowable time period.
2100	ABORT	System resources required to run this test are not available. 1. Retry the command at 1-minute intervals a maximum of 5 times. 2. If the test continues to abort, follow normal escalation procedures.
1	FAIL	This error means the Tone-Clock circuit pack framing verification firmware reports an error in the clock synchronization signal coming into this Port Network. 1. If the Tone-Clock circuit pack reporting the problem is a master clock, then the system synchronization reference is providing a bad timing source. Refer to SYNC (Synchronization) or STRAT-3 (Stratum 3 Clock) Maintenance documentation to change the system synchronization reference. 2. If the Tone-Clock circuit pack is a slave clock, then the EI to which it is listening is providing a bad timing source. Follow the diagnostic procedures specified for TDM-CLK Error Code 2305. 3. If no problem can be found with the incoming synchronization signal, replace the Tone-Clock circuit pack. See "How to Replace the Tone-Clock Circuit Pack" on page T-152 in the TONE-BD section.

Continued on next page

Table 9-377. TEST #148 TDM Bus Clock Circuit Status Inquiry Test — *Continued*

Error Code	Test Result	Description/ Recommendation
2	FAIL	This error indicates that Tone-Clock circuit pack has inaccurately detected loss of signal on the incoming synchronization timing source.
4or8	FAIL	The local oscillator on the Tone-Clock circuit pack has failed.
16or32	FAIL	The circuitry on the Tone-Clock circuit pack uses to detect synchronization timing errors has failed. 1. Errors 2, 4, 8, 16, and 32 indicate that there is poor synchronization between port networks and external facilities. It may be noticeable to the customer in the form of errors in data communications. The Tone-Clock circuit pack is defective. See "How to Replace the Tone-Clock Circuit Pack" on page T-152 in the TONE-BD section.
64	FAIL	This message is only sent when an uplink message has reported the loss of valid synchronization timing information coming into this Port Network. It has been reported in TDM-CLK Error Log entries; one or more of 1025, 1281, 1537, 2049 and 2305. 1. Resolve the errors indicated. No separate corrective action is required.

Continued on next page

Table 9-377. TEST #148 TDM Bus Clock Circuit Status Inquiry Test — *Continued*

Error Code	Test Result	Description/ Recommendation
65	FAIL	The tone-clock is currently not able to lock on to the current synchronization reference. If this tone-clock is in the master port networK: 1. Examine the error log for any DS1-BD, SYNC or other TDM-CLK errors. 2. Examine the DS1 measurements to determine if the facility is healthy. 3. Adminsiter a new synchronization reference. 4. Replace the DS1 board currently supplying the reference. If this tone-clock is in the slave port networK: a. Examine the error log for any SYNC, EXP-INTF or other TDM-CLK errors. b. Execute a reset system pnc to get the standby EI to provide synchronization to this port network.
66	FAIL	There is an on-board failure of TDM clock hardware. 1. Replace this faulty tone-clock circuit pack.
	PASS	TDM Bus Clock Circuit Status is sane. There are no clock-detection circuit problems on the Tone-Clock circuit pack.

TDM Bus Clock Slip Inquiry Test (#149)

This test evaluates the quality of the synchronization source for the Tone-Clock circuit pack.

NOTE:
This test does not apply to the TN2182

Table 9-378. TEST #149 TDM Bus Clock Slip Inquiry Test

Error Code	Test Result	Description/ Recommendation
	ABORT	The system could not allocate the necessary resources for the test.
1001	ABORT	The system could not allocate the necessary resources for the test. 1. Wait 1 minute, and retry the test.
2000	ABORT	Response to the test request was not received within the allowable time period.
2100	ABORT	System resources required to run this test are not available. 1. Retry the command at 1-minute intervals a maximum of 5 times. 2. If the test continues to abort, follow normal escalation procedures.

Continued on next page

Table 9-378. TEST #149 TDM Bus Clock Slip Inquiry Test — *Continued*

Error Code	Test Result	Description/ Recommendation
Any	FAIL	The error code represents the number of timing slips detected on the incoming synchronization source since the last slip inquiry was sent to the Tone-Clock circuit pack. The incoming synchronization signal can be from one of four sources: 1. A Stratum 3 Clock, if that option is administered and the circuit pack tested was the active Tone-Clock in the PPN. 2. A DS1 Interface circuit pack, if DS1 Synchronization is administered, and associated with the circuit pack tested. 3. The local oscillator on the master Tone-Clock circuit pack, if it is providing the system clocking signals. 4. An EXP-INTF circuit pack, if the port network on which the test was executed does not contain the current system synchronization reference. The error code is a variable amount ranging from 1 to 255. 1. Small numbers of slips should not result in service degradation. If the error code is small (1 or 2), rerun the test. If the error only occurs infrequently, it may be ignored. 2. Otherwise, refer to the “Approach to Troubleshooting” section in the Synchronization (SYNC) Maintenance section of this manual.
	PASS	The Tone-Clock circuit pack does not detect any timing slips. This indicates that the incoming synchronization timing source is valid or that the system synchronization reference is a Tone-Clock circuit pack. The **status synchronization** command should be used to verify that the desired synchronization reference is providing timing for the system.

TDM Bus Clock PPM Inquiry Test (#150)

This test evaluates the quality of the synchronization source for the Tone-Clock circuit pack

Table 9-379. TEST #150 TDM Bus Clock PPM Inquiry Test

Error Code	Test Result	Description/ Recommendation
	ABORT	The system could not allocate the necessary resources for the test. 1. Wait 1 minute, and retry the test. 2. If the test continues to abort, follow normal escalation procedures.
255	ABORT	The test was not executed because the Tone-Clock circuit pack was using its local oscillator rather than synchronizing to an external source. 1. Verify that this Tone-Clock circuit pack is expected to be the synchronization source. If not, correct the synchronization information and re-execute the test.
1001	ABORT	The system could not allocate the necessary resources for the test. 1. Wait 1 minute, and retry the test. 2. If the test continues to abort, follow normal escalation procedures.
2000	ABORT	Response to the test request was not received within the allowable time period.
2100	ABORT	System resources required to run this test are not available. 1. Retry the command at 1-minute intervals a maximum of 5 times. 2. If the test continues to abort, follow normal escalation procedures.

Continued on next page

Table 9-379. TEST #150 TDM Bus Clock PPM Inquiry Test — *Continued*

Error Code	Test Result	Description/ Recommendation
Any	FAIL	The error code represents the rate (in Parts Per Million, or PPM) at which clock slip errors have been detected on the incoming synchronization source since the last PPM inquiry was sent to the Tone-Clock circuit pack. A failure of this test indicates that we are outside of Stratum 4 or Stratum 3 timing specifications on the incoming timing source. The error code is a variable amount ranging from 1 to 254. 1. If error 1537 is entered in the hardware error log against TDM-CLK, then the board has switched timing sources. Follow the procedures associated with hardware log error code 1537. 2. Otherwise, refer to "Approach to Troubleshooting" in the Synchronization (SYNC) Maintenance section of this manual. 3. If the error persists, follow normal escalation procedures.
	PASS	The Tone-Clock circuit pack does not detect timing any PPM errors. This indicates that the external synchronization timing source is valid or that the system synchronization reference is a Tone-Clock circuit pack. The **status synchronization** command should be used to verify that the desired synchronization reference is providing timing for the system.

TDM Bus Clock Parameter Update Test (#151)

This test updates the following internal parameters on the Tone-Clock circuit pack:

- Disable in-line duplication status messages.
- Disable in-line subrate frame maintenance messages (TN768, TN780 only).
- Set the PPM threshold at 60 PPM for TN768 and TN780. Set the PPM threshold at 85 PPM for TN2182.
- Enable PPM threshold switching
- Set the number of slips to trigger *loss of signal* - currently 30 per 5 millisecond period
- Enable the on-board synchronization switching algorithm (see above)
- Enable holdover operation (TN2182 only).

This is not a test and will always pass without identifying or reporting any Tone-Clock circuit pack errors

Table 9-380. TEST #151 TDM Bus Clock Parameter Update Test

Error Code	Test Result	Description/ Recommendation
	ABORT	Internal System Error
	FAIL	Internal System Error 1. Retry the command at 1-minute intervals a maximum of 5 times. 2. If the test continues to abort, follow normal escalation procedures.
	PASS	The Tone-Clock circuit pack parameters have been successfully updated.

Board Type Check Test (#574)

This test verifies that a Tone-Clock circuit pack administered with a Stratum 3 Clock source has code TN780

Table 9-381. TEST #574 Board Type Check Test

Error Code	Test Result	Description/ Recommendation
2012	ABORT	Internal System Error 1. Retry the command at 1-minute intervals a maximum of 5 times. 2. If the test continues to abort, follow normal escalation procedures.
ANY	FAIL	Stratum 3 Clock Synchronization is administered for the carrier in which this Tone-Clock circuit pack resides, but the Tone-Clock does not have code TN780. 1. If the Stratum 3 Clock option is incorrectly administered, remove it. 2. Otherwise, replace the circuit pack. See "How to Replace the Tone-Clock Circuit Pack" on page T-152 in the TONE-BD section.
	PASS	The proper (TN780) Tone-Clock circuit pack code is present for Stratum 3 Clock synchronization.

Standby Reference Health Check Test (#651)

This test evaluates the quality of the external synchronization timing source for a standby Tone-Clock circuit pack. It is only executed on a TN780 Tone-Clock circuit packs of vintage 2 or greater

Table 9-382. TEST #651 Standby Reference Health Check Test

Error Code	Test Result	Description/ Recommendation
	ABORT	The system is already in the Standby Reference Health Check mode.
1184	ABORT	This test requires an external synchronization source to be administered (DS1 primary, DS1 primary and secondary, or Stratum 3 Clock). 1. Administer the external synchronization source and retry the test.
2500	ABORT	Internal System Error 1. Try the command again at 1-minute intervals up to 5 times. 2. If the test continues to abort, follow normal escalation procedures.

Continued on next page

Table 9-382. TEST #651 Standby Reference Health Check Test — *Continued*

Error Code	Test Result	Description/ Recommendation
1	FAIL	**If the Tone-Clock circuit pack is in the PPN**, the external synchronization timing source for side A of the Stratum 3 clock, or for the Primary DS1 reference is either absent or invalid. **If the Tone-Clock circuit pack is in an EPN**, the synchronization reference from the active EI circuit pack is either absent or invalid.
2	FAIL	**If the Tone-Clock circuit pack is in the PPN**, both external synchronization timing sources are either absent or invalid. **If the Tone-Clock circuit pack is in an EPN**, the synchronization references from both EI circuit packs are either absent or invalid. 1. Correct the synchronization source problem. Refer to the Synchronization (SYNC) maintenance section of this manual. 2. If the error still exists, replace the Tone-Clock circuit pack reported in the error log. See "How to Replace the Tone-Clock Circuit Pack" on page T-152 in the TONE-BD section. 3. If the problem has not been corrected, follow normal escalation procedures.
	PASS	The external synchronization timing source is valid.

TDMODULE (Trunk Data Module)

MO Name As It Appears In Alarm Log	Alarm Level	Initial System Technician Command To Run (a)	Full Name of MO
TDMODULE	MIN	test port UUCSSpp l	Trunk Data Module
TDMODULE	WRN	test port UUCSSpp l	Trunk Data Module

a. UU is the universal cabinet number (1 for PPN, 2 -44 for EPNs). C is the carrier designation (A, B, C, D, or E). SS is the number of the slot in which the circuit pack resides (01 to 21). pp is the two digit port number (01, 02, ...).

The TDMODULE (Trunk Data Module) Maintenance documentation is covered in the PDMODULE (Data Module) Maintenance documentation.

TIE-BD (Tie Trunk Circuit Pack)

MO Name As It Appears In Alarm Log	Alarm Level	Initial System Technician Command To Run (a)	Full Name of MO
TIE-BD	MIN	test board UUCSS sh	Tie Trunk Circuit Pack
TIE-BD	WRN	test board UUCSS sh	Tie Trunk Circuit Pack

a. UU is the universal cabinet number (1 for PPN, 2 - 44 for EPNs). C is the carrier designation (A, B, C, D, or E). SS is the number of the slot in which the circuit pack resides (01 to 21). pp is the two digit port number (01, 02, ...).

Refer to XXX-BD (Common Port Circuit Pack) Maintenance documentation for circuit pack level errors. See also TIE-TRK (Tie Trunk) Maintenance documentation for related trunk information.

TIE-DS1 (DS1 Tie Trunk)

MO Name As It Appears In Alarm Log	Alarm Level	Initial System Technician Command To Run (a)	Full Name of MO
TIE-DS1 (a)	MAJOR (b)	test trunk *grp/mbr* l (c)	DS1 Tie Trunk
TIE-DS1	MINOR	test trunk *grp/mbr* l (c)	DS1 Tie Trunk
TIE-DS1	WARNING	test trunk *grp/mbr*	DS1 Tie Trunk

a. For additional repair information, see DS1-BD documentation if the tie trunk is on a TN722 or TN767 DS1 circuit pack. See UDS1-BD documentation if the tie trunk is on a TN464C/D UDS1 circuit pack.

b. A MAJOR alarm on a trunk indicates that alarms on these trunks are not downgraded by the **set options** command and that at least 75% of the trunks in this trunk group are alarmed. For more information on the **set options** command, see Chapter 8, "Maintenance Commands".

c. For TN767B vintage 8 or 9 circuit packs, a failure of Test #136 causes a subsequent failure of Test #7. Test #136 is part of the short sequence and generates off-board alarms Test #7 is part of the long sequence and generates on-board alarms. Before entering **busyout**, **release**, **reset** or **test board long** commands, check the vintage number of the circuit pack with **list configuration board** UUCSS. If it is TN767B vintage 8 or 9, do not use the above commands until first making sure that Test #136 passes via **test board short**. Otherwise, extraneous on-board alarms may be generated.

NOTE:
Many trunk problems are caused by incorrect settings of parameters on the trunk group administration form. Settings must be compatible with the local environment and with parameter settings on the far-end. Refer to *DEFINITY Communications System Generic 3 V2 Implementation*, 555-230-653, for information on how to administer trunks. The Application Notes section of that book shows the correct settings for administrable timers and other parameters on a country-by-country basis.

The DS1 tie trunk provides both voice and data communications between two PBX switches. There are two types of DS1 interfaces:

- 24 DS0 channels on a 1.544 Mbps link
- 31 DS0 channels + 1 framing channel on a 2.048 Mbps link

  32-channel mode is supported only on TN464 circuit packs and on G3r V2 systems.

DS1 Tie Trunks are used widely in the Distributed Communications System (DCS) and Central Attendant Service (CAS) system features.

A DS1 tie trunk can also be used as an access endpoint which is a non-signaling channel with bandwidth for voice-grade data, 56 Kbps data or 64 Kbps data.

DS1 tie trunk maintenance provides a strategy to maintain a DS1 tie trunk via a port on either the TN722 or TN767 DS1 Interface circuit pack or the TN464C/D UDS1 Interface circuit pack. Throughout this TIE-DS1 section, the term DS1 Interface applies to DS1 and UDS1 circuit packs.

The DS1 tie trunk maintenance strategy covers logging DS1 tie trunk hardware errors, running tests for trunk initialization, periodic and scheduled maintenance, system technician-demanded tests, and alarm escalation and resolution. Three different trunk service states are specified in DS1 tie trunk maintenance:

Out-of-service	The trunk is deactivated and cannot be used for incoming or outgoing calls.
In-service	The trunk is activated and can be used for both incoming and outgoing calls.
Disconnect (ready-for-service)	The trunk is in an activated state but can only be used for an incoming call.

If the DS1 Interface circuit pack is out of service, then all trunks on the DS1 Interface circuit pack are also placed into the out-of-service state and a Warning alarm is raised.

Hardware Error Log Entries and Test to Clear Values

DS1 Tie Trunk Maintenance Error Log Entries					
Error Type	**Aux Data**	**Associated Test**	**Alarm Level**	**On/Off Board**	**Test to Clear Value**
0*	0	Any	Any	Any	test trunk *grp*/*mbr*
1(a)	57476 57477 57485 57487				
15(b)	Any	Port Audit and Update Test (#36)			
18(c)	0	busyout trunk *grp*/*mbr*	WARNING	OFF	release trunk *grp*/*mbr*‡
130(d)		None	WARNING	ON	test trunk *grp*/*mbr*
257(e)	57473 57474				
513(f)	57392				
769(g)	57393				
1025		DS1 Tie Trunk Seizure (Test #136)	MIN/ WRN†	OFF	test trunk *grp*/*mbr* r 2
1281		Conference Circuit (Test #7)	MIN/ WRN†	ON	test trunk *grp*/*mbr* l r 4 ‡
1537		NPE Crosstalk Test (#6)	MIN/ WRN†	ON	test trunk *grp*/*mbr* l r 3 ‡
1793(h)					test board UUCSS long ‡
2305(i)	50944				
2562(j)	16665				
2817(k)	52992				
3840(l)	Any	Port Audit and Update (Test #36)			

* Run the Short Test Sequence first. If all tests pass, run the Long Test Sequence. Refer to the appropriate test description and follow the recommended procedures.

† Major or Minor alarms on this MO may be downgraded to Warning alarms based on the values used in the **set options** command.

‡ For TN767B vintage 8 or 9 circuit packs, a failure of Test #136 causes a subsequent failure of Test #7. Test #136 is part of the short sequence and generates off-board alarms. Test #7 is part of the long sequence and generates on-board alarms. Before entering **busyout**, **release**, **reset** or **test board long** commands, check the vintage number of the circuit pack with **list configuration board** UUCSS. If it is TN767B vintage 8 or 9, do not use the above commands until first making sure that Test #136 passes via **test board short**. Otherwise, extraneous on-board alarms may be generated.

Notes:

a. The DS1 Interface circuit pack detects a hardware error on the DS1 tie trunk. This error can be caused by incompatible translations. Make sure the parameters administered on the DS1 circuit pack form match those administered on the far-end switch. See *DEFINITY Communications System Generic 3 V2 Implementation,* 555-230-653, and *DEFINITY Communications System Generic 2.2 and Generic 3 V2 DS1/CEPT/ISDN-PRI Reference*, 555-025-107, for details.

   The Aux Data field indicates the following hardware error types:

57476	On-hook before wink
57477	On-hook before ready to receive digits
57485	Wink too short for valid signal
57487	The timer expired while waiting for an off-hook signal from the far end as a response at end of digits dialing. Check the far-end switch for related problems.

   If all administration errors between the switch and the far-end match, and these errors continue to recur, follow normal escalation procedures.

b. This is a software audit error that does not indicate any hardware malfunction. Run Short Test Sequence and investigate associated errors (if any).

c. The DS1 tie trunk has been busied out by a **busyout trunk** grp/mbr command. No calls can be made on this trunk except for the Facility Access Test Call. Facility Access Test Calls are described in Chapter 6, "Additional Maintenance Procedures" and in *DEFINITY Communications System Generic 3 Feature Description,* 555-230-204.

d. This error type indicates that the circuit pack has been removed or has been insane for more than 11 minutes. To clear the error, reinsert or replace the circuit pack.

e. The DS1 Interface circuit pack detects a hardware error on the DS1 tie trunk. The trunk cannot communicate with the far end because it is unable to interpret digits sent from the far-end switch. The Aux Data field indicates the following:

57473	The rotary dial rate is below 8 pulses per second.
57474	The rotary dial rate is above 12 pulses per second.

Check with the far-end switch or operating company for proper trunk connection.

f. DS1 Interface circuit pack detects a hardware error on the DS1 tie trunk. The trunk is in-service/active and waiting for an ''on-hook'' from the far-end switch. No calls can be routed over the trunk while it is in this state. Aux Data 57392 indicates no external release on PBX disconnect. Check with the far-end switch or operating company for proper trunk connection.

g. The DS1 Interface circuit pack detects a hardware error on the DS1 tie trunk. This error usually occurs after one or more occurrences of error type 513. The trunk has received the belated ''on-hook'' that it has been waiting for from the far-end switch. The trunk is restored to in-service/idle and can be used for calls. Aux Data 57393 indicates delayed external release on PBX disconnect. This error can be ignored.

h. The DS1 Interface circuit pack is out-of-service. See the appropriate DS1-BD/UDS1-BD (DS1/UDS1 Interface Circuit Pack) Maintenance documentation for details.

i. Reorder message. The trunk could not be seized. This error will cause the Trunk Seizure Test (#136) to run and is only considered a problem if the Seizure Test fails (in which case Error Type 1025 will also show up). In this case, the trunk may be put in "Ready-for-Service'' state (shown as ''disconnected'' by the status command), which allows only incoming calls. Run the Trunk Seizure Test (#136) and follow its outlined procedures.

j. Retry Failure error. This error is logged only. It is not a hardware failure and hence does not start any testing or generate any alarms. This error comes from call processing and is generated when a second attempt (retry) to seize an outgoing trunk fails.

k. Glare error. This error is logged only. It is not a hardware failure and hence does not start any testing or generate any alarms. This error is the result of a simultaneous seizure of a two-way trunk from both the near-end and the far-end. Attempt to place the call again. If the error persists, execute the DS1 Tie Trunk Seizure Test (#136) and follow its outlined procedures.

l. Port Audit and Update Test (#36) failed due to an internal system error. Enter **status trunk** command and verify the status of the trunk. If the trunk is out-of-service, then enter **release trunk** command to put it back to in-service. Retry the test command. If the test continues to abort, then escalate the problem.

System Technician-Demanded Tests: Descriptions and Error Codes

Always investigate tests in the order presented in the table below when inspecting errors in the system. By clearing error codes associated with the *NPE Crosstalk Test*, for example, you may also clear errors generated from other tests in the testing sequence.

Order of Investigation	Short Test Sequence	Long Test Sequence	D/ND*
NPE Crosstalk Test (#6)		X	ND
Conference Circuit Test (#7)		X	ND
DS1 Tie Trunk Seizure Test (#136)	X	X	ND
Port Audit and Update Test (#36)	X	X	ND

* D = Destructive; ND = Nondestructive

For TN767B vintage 8 or 9 circuit packs, a failure of Test #136 causes a subsequent failure of Test #7. Test #136 is part of the short sequence and generates off-board alarms Test #7 is part of the long sequence and generates on-board alarms. Before entering **busyout**, **release**, **reset** or **test board long** commands, check the vintage number of the circuit pack with **list configuration board** UUCSS. If it is TN767B vintage 8 or 9, do not use the above commands until first making sure that Test #136 passes via **test board short**. Otherwise, extraneous on-board alarms may be generated.

NPE Crosstalk Test (#6)

One or more Network Processing Elements (NPEs) reside on each circuit pack with a TDM Bus interface. (The TN464C/D UDS1 circuit pack has one SCOTCH-NPE chip instead of several NPE chips.) The NPE controls port connectivity and gain, and provides conferencing functions on a per-port basis. The NPE Crosstalk Test verifies that this port's NPE channel talks on the selected time slot and never crosses over to time slots reserved for other connections. If the NPE is not working correctly, one-way and noisy connections may be observed. This test is usually only part of a port's Long Test Sequence and takes on the order of 20 to 30 seconds to complete.

Table 9-383. TEST #6 NPE Crosstalk Test

Error Code	Test Result	Description/ Recommendation
	ABORT	System resources required for this test are not available. 1. Retry the command at 1-minute intervals a maximum of 5 times. 2. If the test continues to abort, escalate the problem.
1000	ABORT	System resources required to run this test are not available. The port may be in use on a valid call. Use the **status station** or **status trunk** command to determine when the port is available for testing. 1. Retry the command at 1-minute intervals a maximum of 5 times. 2. If the test continues to abort, and the port is not in use, escalate the problem.
1001	ABORT	System resources required for this test are not available. 1. Retry the command at 1-minute intervals a maximum of 5 times. 2. If the test continues to abort, escalate the problem.

Continued on next page

Table 9-383. TEST #6 NPE Crosstalk Test — *Continued*

Error Code	Test Result	Description/ Recommendation
1002	ABORT	The system could not allocate time slots for the test. The system may be under heavy traffic conditions or it may have time slots out-of-service due to TDM-BUS errors. The **status health** command can be used to determine if the system is experiencing heavy traffic. Refer to the TDM-BUS Maintenance documentation to diagnose any active TDM-BUS errors. 1. If system has no TDM-BUS errors and is not handling heavy traffic, repeat test at 1-minute intervals a maximum of 5 times. 2. If the test continues to abort, escalate the problem.
1003	ABORT	The system could not allocate a tone receiver for the test. The system may be oversized for the number of Tone Detectors present or some Tone Detectors may be out-of-service. The **list measurements tone-receiver** command will display information on the system's tone receivers. 1. Look for TTR-LEV errors in the Error Log. If present, refer to TTR-LEV Maintenance documentation. 2. Look for TONE-PT errors in the Error Log. If present, refer to TONE-PT Maintenance documentation. 3. If neither condition exists, retry the test at 1-minute intervals a maximum of 5 times. 4. If the test continues to abort, escalate the problem.
1004	ABORT	The port has been seized by a user for a valid call. Use **status trunk** to determine when the port is available for testing. The port is available when it is in the **in-service/idle** state. 1. Retry the command at 1-minute intervals a maximum of 5 times. 2. If the test continues to abort, and the port is not in use, escalate the problem.

Continued on next page

Table 9-383. TEST #6 NPE Crosstalk Test — *Continued*

Error Code	Test Result	Description/ Recommendation
1020	ABORT	The test did not run because of a previously existing error on the specific port or a more general circuit pack error. 1. Examine the Error Log for existing errors against this port or the circuit pack and attempt to diagnose the already existing error.
2000	ABORT	Response to the test request was not received within the allowable time period.
2100	ABORT	System resources required for this test are not available. 1. Retry the command at 1-minute intervals a maximum of 5 times. 2. If the test continues to abort, escalate the problem.
	FAIL	The NPE of the tested port was found to be transmitting in error. This will cause noisy and unreliable connections. 1. Replace the circuit pack.
	PASS	The port is correctly using its allocated time slots. User-reported troubles on this port should be investigated using other port tests and by examining station, trunk, or external wiring.

Conference Circuit Test (#7)

One or more Network Processing Elements (NPEs) reside on each circuit pack with a TDM Bus interface. (The TN464C/D UDS1 circuit pack has one SCOTCH-NPE chip instead of several NPE chips). The NPE controls port connectivity and gain, and provides conferencing functions on a per-port basis. The Conference Circuit Test verifies that the NPE channel for the port being tested can correctly perform the conferencing function. The NPE is instructed to listen to several different tones and conference the tones together. The resulting signal is then measured by a Tone Detector port. If the level of the tone is within a certain range, the test passes.

Table 9-384. TEST #7 Conference Circuit Test

Error Code	Test Result	Description/ Recommendation
	ABORT	System resources required for this test are not available. 1. Retry the command at 1-minute intervals a maximum of 5 times. 2. If the test continues to abort, escalate the problem.
1000	ABORT	System resources required to run this test are not available. The port may be in use on a valid call. Use the **status station** or **status trunk** command to determine when the port is available for testing.
1004	ABORT	The port has been seized by a user for a valid call. Use the **status station** or **status trunk** command to determine when the port is available for testing. The port is available when it is in the **in-service/idle** state. 1. Retry the command at 1-minute intervals a maximum of 5 times. 2. If the test continues to abort, and the port is not in use, escalate the problem.
1018	ABORT	Test disabled via administration. This only applies to analog stations. 1. To enable test, set the Test field on the station administration screen for the particular analog station being tested to ‘‘y.’’ Use the **change station** *extension* command.

Continued on next page

Table 9-384. TEST #7 Conference Circuit Test — *Continued*

Error Code	Test Result	Description/ Recommendation
1020	ABORT	The test did not run due to a previously existing error on the specific port or because of a more general circuit pack error. 1. Examine the Error Log for existing errors against this port or circuit pack, and attempt to diagnose the previously existing error.
2000	ABORT	Response to the test request was not received within the allowable time period.
2100	ABORT	System resources required for this test are not available. 1. Retry the command at 1-minute intervals a maximum of 5 times. 2. If the test continues to abort, escalate the problem.
	FAIL	The NPE of the tested port did not conference the tones correctly. This will cause noisy and unreliable connections. 1. Enter list configuration board UUCSS. If the circuit pack is a TN767B vintage 8 or 9, proceed with the following lettered steps. Otherwise, go to step 2. a. For TN767B vintage 8 or 9 circuit packs, a failure of Test #136 causes a failure of Test #7. Run **test board short** and look at the results for Test #136. b. If Test #136 did not pass, follow recommended procedures for the fail or abort code. Make sure that Test #136 passes before entering **busyout, release, reset** or **test board long** commands, or else unnecessary on-board alarms may be generated.
	PASS	The port can correctly conference multiple connections. User-reported troubles on this port should be investigated using other port tests and by examining station, trunk, or external wiring.

Port Audit and Update Test (#36)

This test sends port level translation data from switch processor to the DS1 Interface circuit pack to ensure that the trunk's translation is correct. Translation updates include the following data: trunk type (in/out), dial type, timing parameters, and signaling bits enabled. The port audit operation verifies the consistency of the current state of the trunk kept by the DS1 Interface circuit pack and the switch software.

Table 9-385. TEST #36 Audit and Update Test

Error Code	Test Result	Description/ Recommendation
	ABORT	Internal System Error 1. Retry the command at 1-minute intervals a maximum of 5 times. 2. If the test continues to abort, escalate the problem.
2000	ABORT	Response to the test request was not received within the allowable time period.
2100	ABORT	Could not allocate the necessary system resources to run this test. 1. Retry the command at 1-minute intervals a maximum of 5 times. 2. If the test continues to abort, escalate the problem.
	FAIL	Internal system error. 1. Retry the command at 1-minute intervals a maximum of 5 times. 2. If the test continues to fail, escalate the problem.
	PASS	Trunk translation has been updated successfully. The current trunk states kept in the DS1 Interface circuit pack and switch software are consistent. If the trunk is busied out, the test will not run but will return PASS. To verify that the trunk is in-service: 1. Enter the **status trunk** command to verify that the trunk is in-service. If the trunk is in-service, no further action is necessary. If the trunk is out-of-service, continue to step 2. 2. Enter the **release trunk** command to put the trunk back into in-service. 3. Retry the test command.

DS1 Tie Trunk Seizure Test (#136)

The DS1 Tie Trunk Seizure Test is run to verify the trunk's signaling capability. The test is composed of two parts. The first part queries the circuit pack for the following errors: Loss of Signal, Red Alarm, Blue Alarm, Yellow Alarm, and Hyperactivity Alarm. The second part of the test is performed by sending a seizure message to the DS1 Interface circuit pack and expecting an active reply by the DS1 Interface circuit pack. If maintenance software does not receive any reply and the timer expires, the test fails. Once the active message is received, a dial pause message is sent to the DS1 Interface circuit pack. If the DS1 Interface circuit pack replies with a dial pulse tone message when the far end responds to the seizure, then the DS1 tie trunk Seizure Test passes. If the far end does not respond to the seizure and the timer expires, and the DS1 Interface circuit pack sends a reorder message back to the maintenance software, then the test fails.

This second part of this test *cannot* be run on a trunk if one of the following cases is true:

1. The trunk direction is administered as an incoming only trunk.
2. The trunk is the 24th port on a DS1 Interface circuit pack which is administered using 24th Common Channel Signaling.
3. The trunk has been seized by a normal trunk call.
4. The trunk is administered with maintenance test disabled.
5. The outgoing signal type of the trunk is either automatic or immediate-start.

Table 9-386. TEST #136 DS1 Tie Trunk Seizure Test

Error Code	Test Result	Description/ Recommendation
	ABORT	Internal System Error
1000	ABORT	System resources required to run this test are not available. 1. Retry the command at 1-minute intervals a maximum of 5 times. 2. If the test continues to abort, escalate the problem.

Continued on next page

Table 9-386. TEST #136 DS1 Tie Trunk Seizure Test — *Continued*

Error Code	Test Result	Description/ Recommendation
1004	ABORT	Far end is seizing the trunk while the test is ongoing. A glare situation is detected. Current test is designed to be aborted. Use **status trunk** command to determine when the trunk is available for testing. 1. Retry the command at 1-minute intervals a maximum of 5 times. 2. If the test continues to abort, and the port is not in use, escalate the problem.
1005	ABORT	Test failed due to incompatible configuration administered in trunk group form. 1. Verify the following fields on the trunk group administration screen: ■ Is trunk direction incoming only? ■ Is trunk outgoing type either automatic or immediate-start? ■ Is trunk the 24th port of the DS1 Interface circuit pack while common control channel signaling is specified? 2. If the trunk has been administered using the above information, then this test should abort.
1018	ABORT	Test has been disabled by trunk group administration. 1. Verify that the Maintenance Test field in trunk administration screen is ‘‘n.’’ To enable the test, change the trunk administration and enter ‘‘y’’ in the Maintenance Test field. 2. Repeat the test.
1020	ABORT	The DS1 Interface circuit pack is out-of-service. 1. Look for DS1-BD/UDS1-BD errors in the Hardware Error Log. If present, refer to the appropriate DS1-BD/UDS1-BD (DS1/UDS1 Interface Circuit Pack) Maintenance documentation. 2. Retry the command. 3. If the test continues to abort, escalate the problem.

Continued on next page

Table 9-386. TEST #136 DS1 Tie Trunk Seizure Test — *Continued*

Error Code	Test Result	Description/ Recommendation
1040	ABORT	The test is invalid for this trunk port because it is administered as an access endpoint. 1. Use **display port** to verify that this port is administered as an access endpoint. In this case the test should abort.
2000	ABORT	Response to the test request was not received within the allowable time period.
2100	ABORT	Could not allocate the necessary system resources to run this test. 1. Retry the command at 1-minute intervals for a maximum of 5 times. 2. If the test continues to abort, escalate the problem.
2053	ABORT	At least one of the following errors is found on the DS1 circuit pack: 1281: Loss of Signal 1793: Blue Alarm 2049: Red Alarm 2305: Yellow Alarm 1537: Hyperactivity 1. Look for the above error types in the Hardware Error Log and follow the procedures given in the appropriate DS1-BD/UDS1-BD Maintenance documentation for the listed error types.
	FAIL	The trunk cannot be seized for an outgoing call.

Continued on next page

Table 9-386. TEST #136 DS1 Tie Trunk Seizure Test — *Continued*

Error Code	Test Result	Description/ Recommendation
2000	FAIL	The circuit pack did not respond to the test within the allowable time period, or the far-end trunk did not respond to the seizure of the near-end trunk and the timer expired. For TN767B vintage 8 or 9 circuit packs, a failure of Test #136 causes a subsequent failure of Test #7. Before entering **busyout**, **release**, **reset** or **test board long** commands, check the vintage number of the circuit pack with **list configuration board UUCSS**. If it is TN767B vintage 8 or 9, do not use the above commands until first making sure that Test #136 passes via **test board short**. Otherwise, extraneous on-board alarms may be generated. 1. Verify that the Trunk Type (in/out) field on the trunk administration screen matches the trunk type administered on the far end switch. 2. Look for DS1-BD/UDS1-BD errors in Hardware Error Log. If present, refer to the appropriate DS1-BD/UDS1-BD (DS1/UDS1 Interface Circuit Pack) Maintenance documentation. 3. Retry the test at 1-minute intervals a maximum of 5 times. 4. If test continues to fail, escalate the problem.
	PASS	The trunk can be seized for an outgoing call.

TIE-TRK (Analog Tie Trunk)

MO Name As It Appears In Alarm Log	Alarm Level	Initial System Technician Command To Run (a,c)	Full Name of MO
TIE-TRK	MAJOR (b)	test port UUCSSpp l	Tie Trunk
TIE-TRK	MINOR	test port UUCSSpp l	Tie Trunk
TIE-TRK	WARNING	test port UUCSSpp sh	Tie Trunk

a. *UU* is the universal cabinet number (1 for PPN, 2 - 44 for EPNs). *C* is the carrier designation (A, B, C, D, or E). *SS* is the number of the slot in which the circuit pack resides (01 to 21). *pp* is the two digit port number (01, 02, ...).

b. A Major alarm on a trunk indicates that alarms on these trunks are not downgraded by the **set options** command and that at least 75 percent of the trunks in this trunk group are alarmed.

   This alarm does not apply to TN497.

c. If ATMS testing is enabled, check the error log for ATMS errors 3840 and 3841. If the error log indicates that measurements exceeded acceptable thresholds, and no other trouble is found with **test trunk**, run the ATMS test call with **test analog-testcall port UUCSSpp full**.

NOTE:
Many trunk problems are caused by incorrect settings of parameters on the trunk group administration form. Settings must be compatible with the local environment and with parameter settings on the far-end. Refer to *DEFINITY Communications System Generic 3 V2 Implementation*, 555-230-653, for information on how to administer trunks. The Application Notes section of that book shows the correct settings for administrable timers and other parameters on a country-by-country basis.

The following circuit packs, including all suffixes such as TN760D, support analog tie trunks:

Analog Tie Trunk Circuit Packs

Code	Trunk Type	Signaling Leads
TN760	4-wire	E&M
TN437	4-wire	E&M
TN439	2-wire	A&B (two-way circuits only)
TN458	4-wire	E&M
TN497	2-wire	A&B
TN2140	4-wire	E&M

Each tie trunk circuit pack occupies a port circuit pack slot and contains 4 port circuits. Each port circuit supports 1 analog tie trunk used to connect the switch to another PBX across one-way or two-way dedicated circuits (see preceding list).

A tie trunk port can also be administered as an access endpoint which is a non-signaling channel with a voice-grade data bandwidth. Tie trunk maintenance employs up to 6 tests, depending on the hardware involved, to monitor the operating condition of the trunk and its connections. These are described in the following sections on each test. The port must be idle for these tests to run. If an incoming call seizes the port while a test is in progress, the test aborts and the call proceeds (except for TN497).

Additional in-line testing is performed whenever a call is in progress, logging errors that occur during operation. You can reproduce these types of errors by making a call over the trunk and then checking the Hardware Error Log.

By making translation and cross-connect changes, circuit packs (except for TN497) can be configured for back-to-back testing, also known as connectivity testing. Port operation is tested by connecting two tie trunk ports together in either E&M or simplex modes. See "Analog Tie Trunk Back-to-Back Testing" in Chapter 6, "Additional Maintenance Procedures".

Hardware Error Log Entries and Test to Clear Values

Table 9-387. TIE Trunk Error Log Entries

Error Type	Aux Data	Associated Test	Alarm Level	On/Off Board	Test to Clear Value
0*	0	Any	Any	Any	test port *UUCSSpp* sh r 1
1(a)	16384	None	WARNING	OFF	
1(b)	57476	None	WARNING	OFF	
1(c)	57477	None	WARNING	OFF	
1(d)	57483	None	WARNING	OFF	
1(e)	57485	None	WARNING	OFF	
15(f)	Any	Port Audit Update Test (#36)			
18(g)	0	busyout trunk *grp/mbr*	WARNING	OFF	release trunk *grp/mbr*
130(h)		None	WARNING	ON	test trunk *grp/mbr*
257(i)	57473	None	WARNING	OFF	
257(j)	57474	None	WARNING	OFF	
257(k)	57475	None	WARNING	OFF	
513(l)	Any	EPF M and E Lead (#74)	MAJ/MIN/ WRN†	OFF	test port *UUCSSpp* sh r 3
769(l)	57481	EPF M and E Lead (#74)	MAJ/MIN/ WRN†	ON	test port *UUCSSpp* sh r 3
1025(m)	Any	None	MAJ/MIN/ WRN†	OFF	
1281(l)	Any	EPF M and E Lead (#74)	MAJ/MIN/ WRN†	ON	test port *UUCSSpp* sh r 3
1537		Loop Around and Conference (#33)	MAJ/MIN/ WRN†	ON	test port *UUCSSpp* l r 3
1793		Tie Trunk Seizure (#73) (Dial Test #747 for TN439)	MAJ/MIN/ WRN†	OFF	test port *UUCSSpp* sh r 2

Continued on next page

Table 9-387. TIE Trunk Error Log Entries — *Continued*

Error Type	Aux Data	Associated Test	Alarm Level	On/Off Board	Test to Clear Value
2049		NPE Crosstalk (#6)	MAJ/MIN/ WRN†	ON	test port *UUCSSpp* l r 3
2305(n)	57424 50944	None (**l**)			
2561(o)	0	None	WARNING	OFF	
2562(p)	16665				
2817(o)	0	None	MINOR	OFF	
2817(q)	52992				
3073(o)	0	None			
3840(r)	8000	Transmission Tests (ATMS)(#844-848)		OFF	test analog-testcall
3841(r)		Transmission Tests (ATMS)(#844-848)	MINOR	OFF	test analog-testcall UUCSSpp r 2

* Run the Short Test Sequence first. If all tests pass, run the Long Test Sequence. Refer to the appropriate test description and follow the recommended procedures.

† Minor alarms on this MO may be downgraded to Warning alarms based on the values used in the **set options** command. If the MINOR alarm is not downgraded by the **set options** values, then the MINOR alarm will be upgraded to a MAJOR alarm if 75% of the trunks in this trunk group are alarmed. These errors, if applicable, always log a MINOR alarm for TN439 and TN497.

Notes:

a. Digit time-out. This occurs when the far-end PBX began transmitting digits too late (10 seconds) after receiving the signal indicating ready to receive digits (if any). This can occur on an incoming immediate, wink, or delay dial line. Check the far-end PBX to ensure a translation match at both ends. This error does not apply to TN497.

b. Rotary dial before wink. This occurs when the far-end PBX starts dialing before the PBX sends the wink on a wink-start or delay-dial trunk. Check the far-end PBX to ensure a translation match at both ends. This error does not apply to TN497.

c. Rotary dial too early. This occurs when the far-end PBX starts dialing too soon (about 50ms) after seizure on a wink start or delay dial line. Check the far-end PBX to ensure a translation match at both ends. This error does not apply to TN497.

d. On hook before wink. This occurs when the far end goes on hook before a wink. Check the far-end PBX to ensure a translation match at both ends. This error applies only to TN439.

e. On an outgoing wink-start or delay-dial trunk, the wink time was too short (less than 80ms) for a valid signal. Check the far-end PBX to ensure a translation match at both ends. This error does not apply to TN497.

f. This is a software audit error that does not indicate any hardware malfunction. Run Short Test Sequence and investigate associated errors (if any).

g. This indicates that the trunk in question has been busied-out by maintenance personnel.

h. The circuit pack has been removed or has been insane for more than 11 minutes. To clear the error, reinsert or replace the circuit pack. TN439 does not alarm this error. This error does not apply to TN497.

i. The rotary dial rate was too slow — less than 8 pulses per second. Check the far-end PBX to ensure a translation match at both ends.

j. The rotary dial rate was too fast — above 12 pulses per second. Check the far-end PBX to ensure a translation match at both ends.

k. The time between digits was too short (less than 300ms). Check the far-end PBX to ensure a translation match at both ends.

l. These errors do not apply to TN439 and TN497.

m. This indicates that the trunk is still seized with an incoming call. The far-end PBX is not releasing the trunk after the call was dropped. Check the far-end PBX for problems.

   Once the trunk is released from the call, the severity of this problem is decreased. If Error Type 1025 does not appear again, this means that the problem has been corrected. Verify that Error Type 1025 does not reappear in the Error Log.

n. Reorder message. The trunk could not be seized. This error causes the Tie Trunk Seizure Test (#73) to run and is considered a problem only if that test fails, logging error 1793. In this case, the trunk may be placed in the ready-for-service state, allowing only incoming calls. This service state shows up as `disconnected` on the trunk status screen. Run the Tie Trunk Seizure Test and follow recommended procedures.

   TN439 logs aux data 57424 or 50944. Other circuit packs log 50944. This error is associated with Test #747 for TN439, Test #73 for TN497, and no test for the others.

o. These errors apply only to TN497.

p. Retry Failure error. This error is logged only. It is not a hardware failure and hence does not start any testing or generate any alarms. This error comes from call processing and is generated when a second attempt (retry) to seize an outgoing trunk fails.

q. Glare error. This error is logged only. It is not a hardware failure and hence does not start any testing or generate any alarms. This error is the result of a simultaneous seizure of a two-way trunk from both the near-end and the far-end. Attempt to place the call again. If the error persists, execute the Tie Trunk Seizure Test (#73) and follow its outlined procedures.

r. Error 3841 indicates that test calls made by the Automatic Transmission Measurement System (ATMS) returned measurements in the unacceptable range. Error 3840 indicates measurements were in the marginal range. Use **list testcall detail** to examine the specific transmission parameters which are out of spec, and investigate the trunk for that kind of noise. If the noise is acceptable, then the AMTS thresholds administered on page 4 of the trunk group form should be changed.

System Technician-Demanded Tests: Descriptions and Error Codes

Always investigate tests in the order presented in the table below when inspecting errors in the system. By clearing error codes associated with the *NPE Crosstalk Test* for example, you may also clear errors generated from other tests in the testing sequence.

Order of Investigation	Short Test Sequence	Long Test Sequence	D/ND*
NPE Crosstalk Test (#6)		X	ND
Loop Around and Conference Circuit Test (#33)		X	ND
Tie Trunk Seizure Test (#73)	X	X	ND
Dial Test #747	X	X	ND
Tie Trunk EPF Test (#74)	X	X	ND
Port Audit and Update Test (#36)	X	X	ND
Transmission Test - ATMS (#844-848)	†	†	ND

* D = Destructive; ND = Nondestructive

† ATMS tests are not part of either sequence. They are run either on demand with **test analog-testcall**, or by the ATMS schedule.

NPE Crosstalk Test (#6)

Each port with a TDM bus interface has one or more Network Processing Elements which controls gain, connectivity to the switch, and conferencing functions for each port on the circuit pack. The NPE Crosstalk Test verifies that a port's NPE channel talks on the time slot assigned to it and does not cross over to time slots reserved for other connections. If the NPE is not working correctly, one-way and noisy connections may be observed. The test takes 20 to 30 seconds to complete.

Table 9-388. TEST #6 NPE Crosstalk Test

Error Code	Test Result	Description/ Recommendation
	ABORT	Could not allocate the necessary system resources to run this test. 1. Retry the command at 1-minute intervals a maximum of 5 times. 2. If the test continues to abort, escalate the problem.
1000	ABORT	System resources required to run this test are not available. The trunk may be busy with a valid call. Use the **display trunk xx** command to determine the trunk group/member number of the port. Use the **status trunk** command to determine the service state of the port. If the service state indicates that the port is in use, then the port is unavailable for certain tests. You must wait until the port is idle before retesting. 1. If the port status is active, but the port is not in use (no connected ports), then check the Error Log for Error Type 1025 (see Error Log table for description of this error and required actions). The port may be locked up. 2. If the port status is idle, then retry the command at 1-minute intervals a maximum of 5 times. 3. If the test continues to abort, escalate the problem.
1001	ABORT	Could not allocate the necessary system resources to run this test. 1. Retry the command at 1-minute intervals a maximum of 5 times. 2. If the test continues to abort, escalate the problem.

Continued on next page

Table 9-388. TEST #6 NPE Crosstalk Test — *Continued*

Error Code	Test Result	Description/ Recommendation
1002	ABORT	The system could not allocate time slots for the test. The system may be under heavy traffic conditions or it may have time slots out-of-service due to TDM-BUS errors. Refer to TDM-BUS Maintenance to diagnose any active TDM-BUS errors. 1. If system has no TDM-BUS errors and is not handling heavy traffic, repeat test at 1-minute intervals a maximum of 5 times. 2. If the test continues to abort, escalate the problem.
1003	ABORT	The system could not allocate a tone receiver for the test. The system may be oversized for the number of Tone Detectors present or some Tone Detectors may be out-of-service. 1. Look for TTR-LEV errors in the Error Log. If present, refer to TTR-LEV Maintenance documentation. 2. Look for TONE-PT errors in the Error Log. If present, refer to TONE-PT Maintenance documentation. 3. If neither condition exists, retry the test at 1-minute intervals a maximum of 5 times. 4. If the test continues to abort, escalate the problem.
1004	ABORT	The port was seized by a valid call during the test. The test has been aborted. Use the **display trunk xx** command to determine the trunk group/member number of the port. Use the **status trunk** command to determine the service state of the port. If the service state indicates that the port is in use, then the port is unavailable for certain tests. You must wait until the port is idle before retesting.
2000	ABORT	Response to the test request was not received within the allowable time period.
2100	ABORT	Could not allocate the necessary system resources to run this test. 1. Retry the command at 1-minute intervals a maximum of 5 times. 2. If the test continues to abort, escalate the problem.

Continued on next page

Table 9-388. TEST #6 NPE Crosstalk Test — *Continued*

Error Code	Test Result	Description/ Recommendation
Any	FAIL	The NPE of the tested port was found to be transmitting in error. This will cause noisy and unreliable connections. This problem may be caused by bad Tone Detectors or Tone Generators. 1. Test all Tone-Clock circuit packs, and resolve any errors on these circuit packs before any action is taken on the TIE circuit pack. Then repeat the test. 2. If the test fails again, replace the TIE circuit pack.
	PASS	The port is correctly using its allocated time slots. User-reported troubles on this port should be investigated using other port tests and examining station, trunk or external wiring.

Loop Around and Conference Circuit Test (#33)

This test verifies signal transmission and conferencing capabilities of a port using 404-Hz, 1004-Hz, and 2804-Hz tones. This is an on-board test only: each tone is transmitted to and looped around within the port and then returned.

This test can fail due to noise induced by adjacent electric power lines. If this is the case, the customer must resolve it with their local power company. To temporarily alleviate an alarm caused by failure of this test, you can disable it via the `Test` field on the trunk administration form.

Table 9-389. TEST #33 Loop Around and Conference Circuit Test

Error Code	Test Result	Description/ Recommendation
	ABORT	Could not allocate the necessary system resources to run this test. 1. Retry the command at 1-minute intervals a maximum of 5 times. 2. If the test continues to abort, escalate the problem.
1000	ABORT	System resources required to run this test are not available. The trunk may be busy with a valid call. Use the **display trunk xx** command to determine the trunk group/member number of the port. Use the **status trunk** command to determine the service state of the port. If the service state indicates that the port is in use, then the port is unavailable for certain tests. You must wait until the port is idle before retesting. 1. If the port status is active, but the port is not in use (no calls), then check the Error Log for Error Type 1025 (see Error Log table for description of this error and required actions). The port may be locked up. 2. If the port status is idle, then retry the command at 1-minute intervals a maximum of 5 times. 3. If the test continues to abort, escalate the problem.

Continued on next page

Table 9-389. TEST #33 Loop Around and Conference Circuit Test — *Continued*

Error Code	Test Result	Description/ Recommendation
1002	ABORT	The system could not allocate time slots for the test. The system may be under heavy traffic conditions or it may have time slots out-of-service due to TDM-BUS errors. Refer to TDM-BUS Maintenance to diagnose any active TDM-BUS errors. 1. If system has no TDM-BUS errors and is not handling heavy traffic, repeat test at 1-minute intervals a maximum of 5 times. 2. If the test continues to abort, escalate the problem.
1003	ABORT	The system could not allocate a tone receiver for the test. The system may be oversized force. 1. Look for TTR-LEV errors in the Error Log. If present, refer to TTR-LEV Maintenance documentation. 2. Look for TONE-PT errors in the Error Log. If present, refer to TONE-PT Maintenance documentation. 3. If neither condition exists, retry the command at 1-minute intervals a maximum of 5 times. 4. If the test continues to abort, escalate the problem.
1004	ABORT	The port was seized by a valid call during the test. The test has been aborted. Use the **display trunk xx** command to determine the trunk group/member number of the port. Use the **status trunk** command to determine the service state of the port. If the service state indicates that the port is in use, then the port is unavailable for certain tests. You must wait until the port is idle before retesting.
2000	ABORT	Response to the test request was not received within the allowable time period.
2100	ABORT	Could not allocate the necessary system resources to run this test. 1. Retry the command at 1-minute intervals a maximum of 5 times. 2. If the test continues to abort, escalate the problem.

Continued on next page

Table 9-389. TEST #33 Loop Around and Conference Circuit Test — *Continued*

Error Code	Test Result	Description/ Recommendation
7	FAIL	The conference capabilities of the port failed. The port may still be operational, or the problem may be off-board.

Continued on next page

Table 9-389. TEST #33 Loop Around and Conference Circuit Test — *Continued*

Error Code	Test Result	Description/ Recommendation
129	FAIL	The reflective 404-Hz tone test failed. Poor quality transmission was detected to or from the port. The problem may be off-board.
131	FAIL	The reflective 1004-Hz tone test failed. Poor quality transmission was detected to or from the port. The problem may be off-board.
133	FAIL	The reflective 2804-Hz tone test failed. Poor quality transmission was detected to or from the port. The problem may be off-board. 1. Test all Tone-Clock circuit packs in the same carrier, and resolve any errors that occur on these circuit packs. 2. To make sure the problem is on-board, disconnect port from the loop and retry test. 3. If test fails, replace the circuit pack. **NOTE:** If the Loop Around and Conference Circuit Test fails for all ports on a circuit pack, a -5 volt power problem is indicated. If a TN736 or TN752 power unit circuit pack is present, the 631DB AC power unit or 676B DC power unit may be defective. (The 631DB power unit is used in a medium cabinet powered by an AC source. The 645 B power unit is used in a medium cabinet powered by a DC power source.) The system may contain either a TN736 or a TN752 power unit circuit pack OR a 631DB AC power unit, **but not both types of power units.** To investigate problems with a 631DB power unit, refer to CARR-POW (Carrier Port Power Unit for AC-Powered Systems) Maintenance documentation. To investigate problems with 645 B power unit, refer to CARR-POW (Carrier Port Power Unit for DC-Powered Systems) Maintenance documentation.

Continued on next page

Table 9-389. TEST #33 Loop Around and Conference Circuit Test — *Continued*

Error Code	Test Result	Description/ Recommendation
	PASS	Tie trunk Loop Around and Conference Test is successful. This port is functioning properly. 1. If users are reporting troubles, examine loop connections to the port.

Audit Update Test (#36)

This test sends to the circuit pack updates of translations for all administered ports on the circuit pack. It is non-disruptive and guards against possible corruption of translation data contained on the circuit pack. No response is expected from the circuit pack. Port translation data includes:

- Start type: immediate, automatic, wink-start, or delay dial
- Rotary or DTMF senderization in or out
- Disconnect timing: 10 to 2550ms in 10ms increments
- DMTF time slot
- Continuous-seize-ack? (TN2140

Table 9-390. TEST #36 Audit Update Test

Error Code	Test Result	Description/ Recommendation
	ABORT	Could not allocate the necessary system resources to run this test. 1. Retry the command at 1-minute intervals a maximum of 5 times. 2. If the test continues to abort, escalate the problem.
2100	ABORT	Could not allocate the necessary system resources to run the test.
	FAIL	Internal system error 1. Retry the command at 1-minute intervals a maximum of 5 times. 2. If test continues to fail, escalate the problem.

Continued on next page

Table 9-390. TEST #36 Audit Update Test — *Continued*

Error Code	Test Result	Description/ Recommendation
	PASS	This test passed. Translation information was successfully updated on the circuit pack. If the trunk is busied out, the test will not run, but will return PASS (except on TN439 and TN497). 1. If signaling troubles are reported, verify translation information for this port. 2. To verify that the trunk is in-service, enter **status trunk** command to verify that the trunk is in-service. If the trunk is in-service, no further action is necessary. If the trunk is out-of-service, continue to Step 2. 3. Enter **release trunk** command to put trunk back into in-service. 4. Retry the test command.

Tie Trunk Seizure Test (#73) and Tie Trunk Dial Test (#747)

For wink-start, delay-dial and TN2140 (cont-seize-ack or discont-seize-ack) trunks, this test activates the M lead and checks for a response from the far end within 10 seconds.

For TN497, the test seizes a trunk and outpulses a pause. The port reports uplink the result of the seizure. This test can be disabled via the `Test` field on the trunk group administration form.

For TN439, Test #747 is run instead of #73. This test seizes a trunk and outpulses a pause digit. This test aborts on ports administered as access endpoints.

Table 9-391. TEST #73,#747 Tie Trunk Seizure Test

Error Code	Test Result	Description/ Recommendation
	ABORT	Could not allocate the necessary system resources to run this test. 1. Retry the command at 1-minute intervals a maximum of 5 times. 2. If the test continues to abort, escalate the problem.
1000	ABORT	System resources required to run this test are not available. The trunk may be busy with a valid call. Use the **display trunk xx** to determine the trunk group/member number of the port. Use the **status trunk** command to determine the service state of the port. If the service state indicates that the port is in use, then the port is unavailable for certain tests. You must wait until the port is idle before retesting. 1. If the port status is active, but the port is not in use (no calls), then check the Error Log for Error Type 1025 (see Error Log table for description of this error and required actions). The port may be locked up. 2. If the port status is idle, then retry the command at 1-minute intervals a maximum of 5 times. 3. If the test continues to abort, escalate the problem.

Continued on next page

Table 9-391. TEST #73,#747 Tie Trunk Seizure Test — *Continued*

Error Code	Test Result	Description/ Recommendation
1004	ABORT	The port was seized by a valid call during the test. The test has been aborted. Use the **display trunk xx** to determine the trunk group/member number of the port. Use the **status trunk** command to determine the service state of the port. If the service state indicates that the port is in use, then the port is unavailable for certain tests. You must wait until the port is idle before retesting. 1. Retry the command at 1-minute intervals a maximum of 5 times. 2. If the test continues to abort, and the port is not in use, escalate the problem.
1005	ABORT	This test is not valid for this trunk translation. Must be a wink-start or delay dial trunk and must be outgoing or two-way for this test to run. For the TN2140, the trunk must also be continuous-seize-ack or discontinuous-seize-ack. 1. Check trunk translation. If it is not a wink-start or delay dial trunk, this abort message should be ignored.
1018	ABORT	Test disabled via administration. 1. Verify that the ‘‘Maintenance Tests?’’ field on the Trunk Group Form is set to "n". To enable the test, issue the **change trunk-group x** command where ‘‘x’’ equals the number of the trunk group to be tested. Then change the entry in the ‘‘Maintenance Tests?’’ field on the form to ‘‘y.’’
1040	ABORT	This test is not performed for trunk ports administered as access endpoints. 1. Verify this port is an access endpoint by using the **display port** command. 2. If the port has been administered as an access endpoint, then this test should abort.

Continued on next page

Table 9-391. TEST #73,#747 Tie Trunk Seizure Test — *Continued*

Error Code	Test Result	Description/ Recommendation
2100	ABORT	Could not allocate the necessary system resources to run the test. 1. Retry the command at 1-minute intervals a maximum of 5 times. 2. If the test continues to abort, escalate the problem.
3	FAIL	No dial tone detected from the other end. (TN439 circuit packs only.) 1. Retry the command at one minute intervals a maximum of five times. 2. If the test continues to fail, check the far-end PBX to ensure a translation match at both ends. 3. Check the facility.
2000	FAIL	Seizure message is not received back within 10 seconds. 1. Retry the command at 1-minute intervals a maximum of 5 times. 2. If the test continues to fail, check the far-end PBX to ensure a translation match at both ends. 3. Check the facility.
	PASS	The Tie Trunk Seizure Test passes. This port is functioning properly. 1. If users are reporting troubles, examine loop connections to the port, wiring, and stations.

Tie Trunk EPF Test (#74)

The first part of this test checks for proper activation and deactivation of the port's E lead. The second part checks the M lead electronic power feed current flow.

Table 9-392. TEST #74 Tie Trunk EPF Test

Error Code	Test Result	Description/ Recommendation
	ABORT	Could not allocate the necessary system resources to run this test.
1	ABORT	Internal System Error 1. Retry the command at 1-minute intervals a maximum of 5 times. 2. If the test continues to abort, escalate the problem.
1000	ABORT	System resources required to run this test are not available. The trunk may be busy with a valid call. Use the **display trunk xx** to determine trunk group/member number of the port. Use the **status trunk** command to determine the service state of the port. If the service state indicates that the port is in use, then the port is unavailable for certain tests. You must wait until the port is idle before retesting. 1. If the port status is active, but the port is not in use (no calls), then check the Error Log for Error Type 1025 (see Error Log table for description of this error and required actions). The port may be locked up. 2. If the port status is idle, then retry the command at 1-minute intervals a maximum of 5 times. 3. If the test continues to abort, escalate the problem.

Continued on next page

Table 9-392. TEST #74 Tie Trunk EPF Test — *Continued*

Error Code	Test Result	Description/ Recommendation
1004	ABORT	The port was seized by a valid call during the test. The test has been aborted. Use the **display trunk xx** to determine the trunk group/member number of the port. Use the **status trunk** command to determine the service state of the port. If the service state indicates that the port is in use, then the port is unavailable for certain tests. You must wait until the port is idle before retesting. 1. Retry the command at 1-minute intervals a maximum of 5 times. 2. If the test continues to abort, and the port is not in use, escalate the problem.
1005	ABORT	This test is not valid for this trunk translation. Must be a type-1 standard trunk for this test to run. 1. Check trunk configuration. If it is not a type-1 standard trunk, this abort message should be ignored.
1014	ABORT	The circuit pack has not been inserted into the system. 1. Make sure circuit pack is inserted in carrier and fully seated. 2. If test continues to fail, escalate problem.
1040	ABORT	This test is not performed for trunk ports administered as access endpoints. 1. Verify this port is an access endpoint by using the **display port** command. 2. If the port has been administered as an access endpoint, then this test should abort.
2000	ABORT	Response to the test request was not received within the allowable time period.
2100	ABORT	Could not allocate the necessary system resources to run the test. 1. Retry the command at 1-minute intervals a maximum of 5 times. 2. If the test continues to abort, escalate the problem.

Continued on next page

Table 9-392. TEST #74 Tie Trunk EPF Test — *Continued*

Error Code	Test Result	Description/ Recommendation
1	FAIL	The E lead test failed due to an on-board port problem. 1. Replace the circuit pack.
2	FAIL	The M lead test failed. The EPF is in an overcurrent condition while connected to the external M lead. 1. To make sure the problem is on-board, disconnect facility from the pack and retry test. 2. If test fails, replace circuit pack.
	PASS	Tie Trunk EPF test is successful. This port is functioning properly. 1. If users are reporting troubles, examine loop connections to the port.

Transmission Test (#844-848)

This test is non-destructive.

These tests are run by the Automatic Transmission Measurement System (ATMS). They are not part of the long or short trunk test sequences. Instead, they are run on demand with the **test analog-testcall** command or as part of ATMS scheduled testing. For more information, see "Automatic Transmission Measurement System (ATMS)" in Chapter 6, "Additional Maintenance Procedures".

The test call is run from an analog port on a TN711 Maintenance/Test circuit pack. It attempts to seize a port and make a call to a terminating test line (TTL) on the trunk's far end. Transmission performance measurements are made and compared to administered thresholds. Errors are generated when results fall outside of ''marginal'' or ''unacceptable'' thresholds. Detail and summary measurement reports are obtainable via the **list testcalls** command.

Table 9-393. TEST #844-848 Transmission Test

Error Code	Test Result	Description/ Recommendation
1000	ABORT	System resources required to run this test are not available. The port may be busy with a valid call. Use **display port UUCSSpp** to determine the trunk group/member number of the port. Use the "status trunk" command to determine the service state of the port. If the service state indicates that the port is in use, then the port unavailable for this test. (Refer to section on "status" commands for a full description all possible states). You must wait until the port is idle before retesting. 1. If the port status is idle, then retry the command at 1 minute intervals for a maximum of 5 retries. 2. If the test continues to abort escalate the problem.
1001	ABORT	Could not allocate the necessary system resources to run this test. 1. Retry the command at 1 minute intervals for a maximum of 5 retries. 2. If the test continues to abort escalate the problem.

Continued on next page

Table 9-393. TEST #844-848 Transmission Test — *Continued*

Error Code	Test Result	Description/ Recommendation
1002	ABORT	The system could not allocate timeslots for the test. The system may be under heavy traffic conditions or it may have timeslots out of service due to TDM bus errors. Refer to TDM Bus Maintenance to diagnose any active TDM bus errors. 1. If system has no TDM bus errors and is not handling heavy traffic, repeat test at 1 minute intervals for a maximum of 5 retries. 2. If the test continues to abort escalate the problem.
1004	ABORT	The port has been seized by a user for a valid call. Use status trunk to determine when the port is available for testing. 1. Retry the command at 1 minute intervals for a maximum of 5 retries. 2. If the test continues to abort and the port is not in use, escalate the problem.
1005	ABORT	Trunk has been administered as incoming-only; transmission tests can only be run on outgoing trunks.
1115	ABORT	The near end test line on the TN771 circuit pack could not be allocated. 1. Verify that the TN771 circuit pack is in service and that port 1 is administered and in service with the **status port** command. 2. retry the command at 1 minute intervals for a maximum of 5 retries. 3. If the test continues to abort escalate the problem.
2000	ABORT	The test timed out while waiting for a response from the TN771 circuit pack. 1. Retry the command at 1 minute intervals for a maximum of 5 retries. 2. If the test continues to abort escalate the problem.

Continued on next page

Table 9-393. TEST #844-848 Transmission Test — *Continued*

Error Code	Test Result	Description/ Recommendation
2012	ABORT	An internal software error occurred. 1. Retry the command at 1 minute intervals for a maximum of 5 retries. 2. If the test continues to abort escalate the problem.
2053	ABORT	The test call could not be established, but no information on why is available. 1. Retry the command at 1 minute intervals for a maximum of 5 retries. 2. If the test continues to abort escalate the problem.
2056	ABORT	An error occurred while trying to obtain results from the TN771 circuit pack. 1. Test the TN771 circuit packs. 2. If the test continues to abort escalate the problem.
1900	ABORT	The test completion message was not received from the TN771 circuit pack. 1. Test the TN771 circuit packs. 2. If the test continues to abort escalate the problem.
1905	ABORT	Intercept tone detected from far end. 1. Get the test line data from theand verify it with the far end. Dial the test number manually to see if the TTL is reached. If it is not, then either the number is wrong, or the far end is administered incorrectly. 2. If the test continues to abort escalate the problem.
1906	ABORT	Reorder tone detected from far end. 1. See actions for error code 1905.
1907	ABORT	Other unexpected tone detected from far end. 1. See actions for error code 1905.
1913	ABORT	Audible Ring detected from far end. 1. See actions for error code 1905.

Continued on next page

Table 9-393. TEST #844-848 Transmission Test — *Continued*

Error Code	Test Result	Description/ Recommendation
1914	ABORT	Unidentified interrupted tone detected from far end. 1. See actions for error code 1905
1915	ABORT	Busy tone detected from far end. 1. Since the test line at the far end was busy. Try the test again. 2. If the test continues to abort, the problem is with the far end system.
1918	ABORT	Test progress tone not removed from far end (type 105 test line only). 1. The problem is with the far end system; a technician at the far end should test the test line (TN771 or ADFTC).
1919	ABORT	Unexpected far end release 1. The problem is with the far end system; a technician at the far end should test the test line (TN771 or ADFTC).
1920	ABORT	No response from far end. 1. The problem is with the far end system; a technician at the far end should test the test line (TN771 or ADFTC).
1921	ABORT	No data returned from far end. 1. The problem is with the far end system; a technician at the far end should test the test line (TN771 or ADFTC).
1922	ABORT	Steady, unidentifiable tone from far end 1. See actions for error code 1905.
1923	ABORT	Broadband energy detected from far end (such as voice or announcement). 1. See actions for error code 1905.
1924	ABORT	No test tone from far end 1. See actions for error code 1905.

Continued on next page

Table 9-393. TEST #844-848 Transmission Test — *Continued*

Error Code	Test Result	Description/ Recommendation
1938	ABORT	Near-end self test failed. 1. Test the TN771 circuit packs. 2. If the test continues to abort escalate the problem.
1939	ABORT	Loss self check at 0dBm at 1004 Hz failed. 1. Test the TN771 circuit packs. 2. If the test continues to abort escalate the problem.
1940	ABORT	Far end noise self check failed. 1. The problem is with the far end system; a technician at the far end should test the test line (TN771 or ADFTC).
1941	ABORT	High frequency singing return loss self check failed. 1. Test the TN771 circuit packs. 2. If the test continues to abort escalate the problem.
1942	ABORT	Echo return loss self check failed. 1. Test the TN771 circuit packs. 2. If the test continues to abort escalate the problem.
1943	ABORT	Singing return loss self check failed. 1. Test the TN771 circuit packs. 2. If the test continues to abort escalate the problem.
1944	ABORT	Loss self check at -16 dBm at 1004 Hz failed. 1. Test the TN771 circuit packs 2. If the test continues to abort escalate the problem.
1945	ABORT	Loss self check at -16 dBm at 404 Hz failed. 1. Test the TN771 circuit packs. 2. If the test continues to abort escalate the problem.
1946	ABORT	Loss self check at -16 dBm at 2804 Hz failed. 1. Test the TN771 circuit packs. 2. If the test continues to abort escalate the problem.

Continued on next page

Table 9-393. TEST #844-848 Transmission Test — *Continued*

Error Code	Test Result	Description/ Recommendation
1947	ABORT	Noise with tone self check failed. 1. Test the TN771 circuit packs. 2. If the test continues to abort escalate the problem.
	FAIL	Measured transmission performance was in the unacceptable range as administered on the trunk group form. Retrieve a measurement report via the **list testcalls** command. Make sure that ATMS thresholds are set properly on page 4 of the trunk group form. Besides the facility, test failures can be caused by faulty test lines or switch paths. If the measurements point to a facility problem, report the results to the trunk vendor.
8000	FAIL	Measured transmission performance was in the marginal range as administered on the trunk group form. This generally means that the trunk is usable but has an undesirable amount of noise or loss. If the user does not report unacceptable effects, it may not be necessary to take any action. Retrieve a measurement report via the **list testcalls** command. Make sure that ATMS thresholds are set properly on page 4 of the trunk group form.

TIME-DAY (Time of Day)

MO Name As It Appears In Alarm Log	Alarm Level	Initial System Technician Command To Run	Full Name of MO
TIME-DAY	MINOR	set time	Time of Day

The time of day contains the current year, month, day of the week, day of the month, hour, minute, and second. The Time of Day maintenance object is responsible for monitoring the time-of-day clock and raising an alarm if the time-of-day clock is not set or cannot be read by the software. If the time-of-day clock is not set or cannot be read by the software, many features such as Time-of-Day Routing, CDR, ISDN Call-by-Call, Duplication, and so on will be either inoperative or incorrect. The time-of-day clock should be set using the **set time** command whenever the system is initially powered up or the TN1648 SYSAM circuit pack is replaced.

The time-of-day clock can be read with the **display time** command and set via the **set time** command. The time-of-day clock resides on the TN1648 SYSAM circuit pack and has a backup battery to save the time of day during power failures. If the TN1648 SYSAM circuit pack is physically removed from the carrier, the contents of the time-of-day clock is lost and the time of day must be set when the TN1648 SYSAM circuit pack is re-inserted.

Hardware Error Log Entries and Test to Clear Values

Time of Day Error Log Entries					
Error Type	**Aux Data**	**Associated Test**	**Alarm Level**	**On/Off Board**	**Test to Clear Value**
0*	0	Any	Any	Any	display time
247(a)	0	none	MINOR	OFF	set time

Notes:

a. This error indicates that software cannot read the time-of-day clock on the TN1648 SYSAM circuit pack. During this condition, all time stamps on Alarm Log entries, Hardware Error Log entries, and Software Error Log entries are potentially inaccurate. In addition, any features that are sensitive to the time of day (such as SMDR, Time-of-Day Routing, ISDN Call-by-Call) will not function correctly.

To resolve the alarm, do the following:

1. Use the **set time** command to set the time of day.
2. Use the **display time** command to display the time of day. If the time of day is displayed correctly, wait 15 minutes and verify that the alarm is retired. If the alarm has not been retired, continue with Step 3.
3. Test the active TN1648 SYSAM circuit pack using the **test maintenance [a | b] sh** command. If any tests fail, refer to the repair procedures for the SYSAM circuit pack before further investigating time-of-day problems. If all tests PASS and the alarm has not been retired, proceed to Step 4.
4. Replace the active TN1648 SYSAM circuit pack must be replaced. See "Replacing SPE Circuit Packs" in Chapter 5, "Responding to Alarms and Errors". The alarm should be resolved within 15 minutes of replacing the SYSAM and resetting the time with **set time**.

TONE-BD (Tone-Clock Circuit Pack)

MO Name As It Appears In Alarm Log	Alarm Level	Initial System Technician Command To Run (a)	Full Name of MO
TONE-BD	MAJOR	test tone-clock UUC short	Tone-Clock Circuit Pack
TONE-BD	MINOR	test tone-clock UUC short	Tone-Clock Circuit Pack
TONE-BD	WARNING	release tone-clock UUC	Tone-Clock Circuit Pack

a. UU is the universal cabinet number (1 for PPN, 2 -44 for EPNs). C is the carrier designation (A, B, C, D, or E).

The Tone-Clock circuit packs house two independent components. The tone generator provides all the tones needed by the system, and the clock generates the system clocks for the Time Division Multiplex (TDM) Bus and the LAN Bus, and aids in monitoring and selecting internal synchronization references.

When resolving errors/alarms on the Tone-Clock circuit pack, the following sections should also be consulted:

- TONE-PT (Tone Generator)
- TDM-CLK (TDM Bus Clock)
- SYNC (Synchronization)

The TN2182 is a combined Tone-Clock-Detector circuit pack which contains a third independent function not available on the TN768 or TN780. The TN2182 contains 8 ports used for all-purpose tone detection. These ports are called Enhanced Tone Receiver ports (ETR-PT) and are described in the documentation for ETR-PT.

Tone-Clock Circuit Packs and System Reliability Options

The following sections describe the relationship between the various System Reliability Options and Tone-Clock circuit pack configurations.

Standard Reliability Option

Systems with the Standard Reliability Option (no duplication options) have one Tone-Clock circuit pack in each port network (PPN and EPN). For the PPN or the first EPN of a cabinet this is in the A carrier. Cabinets containing a second EPN will also have a Tone-Clock circuit pack in the E carrier. This Tone-Clock circuit pack generates clocks and provides system tones for all carriers of the port network it resides on.

High Reliability Option

Systems with the High Reliability Option (duplicated SPE, simplex PNC) have one Tone-Clock circuit pack in each PPN control carrier, A and B. One Tone-Clock circuit pack will be actively generating system clock signals for PPN components, while the other will be in standby mode, ready to take over in the event of a Tone-Clock interchange. Similarly, one Tone-Clock circuit pack will be actively providing system tones for the PPN, while the other will be in standby mode. Normally, the same Tone-Clock circuit pack will be active for both tones and clock signals, but these responsibilities may be divided if neither circuit pack is able to perform both functions. The **status port-network** PN# command will indicate which Tone-Clock circuit pack is actively performing each function.

For systems using the TN2182 Tone-Clock-Detector circuit pack, tone generation and clock generation behaves the same as other clock boards with one being active and one being standby. But the tone detector ports (ETR-PTs) of the TN2182 are always considered available and in-service regardless of the active/standby state of the tones or clock for a specific circuit pack.

EPN Tone-Clock circuit pack configuration is the same as for the Standard Reliability Option. Each EPN Tone-Clock circuit pack will be active for both tones and clock signals for its port network.

Critical Reliability Option

Systems with the Critical Reliability Option (SPE duplication and PNC duplication) have two Tone-Clock circuit packs associated with the PPN, as in the High Reliability Option case, and two more Tone-Clock circuit packs for each EPN. For the first EPN in a cabinet, these are in carriers A and B; for the second EPN, where configured, they are in carriers D and E. As in the previous case, one Tone-Clock in each Port Network is active, supplying system clocks and tones, and the other is in standby mode.

Tone-Clock Interchange Strategy

Tone-Clock circuit pack interchanges are controlled both by manual intervention and by maintenance software strategies.

The manual interchange strategy for Tone-Clock circuit packs differs slightly between the PPN and any EPNs on a system.

Manual PPN Tone-Clock Interchange

In a PPN with more than one Tone-Clock circuit pack, the intention is to assure that the one considered most healthy is active at any given time. *This is independent of the SPE Duplication strategy*, in the sense that the active Tone-Clock circuit pack need not change with an interchange of SPE carriers. Rather, except for the effect of the manual intervention discussed earlier, Tone-Clock interchanges occur only as a result of changes in the health of

Tone-Clock circuit packs, as perceived by maintenance software. When both Tone-Clock circuit packs are equally healthy, no preference is given to one over the other, regardless of which SPE carrier is active.

It is possible to manually control Tone-Clock interchanges in three ways.

1. The **standby** Tone-Clock circuit pack may be made unavailable for most purposes by using the **busyout tone-clock UUC** command. Such a Tone-Clock may not be selected with console commands, nor with normal maintenance software activities, until it has been made available again with the **restore tone-clock UUC** command.

   NOTE:
   busyout tone-clock is not allowed for active Tone-Clock circuit packs.

2. The SPE processor lock switches may be used to force a particular SPE to be active. *This method overrides all other Tone-Clock interchange controls*. If there is a Tone-Clock circuit pack in the same carrier as the active SPE, it will become active, regardless of its health. If the Tone-Clock circuit pack in the selected SPE was in the *busyout* state (see item 1 above), it will automatically be released and made active. While the lock switches are set for a particular carrier, *no manual intervention or software error detection* will cause an interchange of Tone-Clocks; the Tone-Clock circuit pack in the standby SPE carrier can never become active. If there is no Tone-Clock circuit pack in the selected SPE at the time the switches are set, but one is later installed, the system will interchange to it regardless of its health. If the Tone-Clock circuit pack is removed from an SPE while the switches are set, *no interchange will occur*; the system will have no active tone-clock. When the lock switches are restored to the neutral position, a tone clock interchange will occur only if the standby Tone-Clock circuit pack is healthier than the active one.

3. A particular Tone-Clock circuit pack can be made active by issuing the **set tone-clock UUC [override]** command. If the Tone-Clock to be made active is less healthy than the currently active one, no interchange will occur unless the **override** option is specified; without it a message will inform the user that it is required.

   Once a Tone-Clock circuit pack is made active by the **set tone-clock UUC** command, it will stay active until either the **set tone-clock UUC** command is issued again to make the other circuit pack active, or until a fault occurs in the active Tone-Clock circuit pack, which causes the system to interchange Tone-Clocks.

Manual EPN Tone-Clock Interchange

In an EPN with duplicated Tone-Clock circuit packs, one circuit pack is always *preferred* over the other. For the first Port Network in a cabinet, this is the Tone-Clock circuit pack in carrier **A**. If a second Port Network is configured in a cabinet, its preferred Tone-Clock is the one in carrier **E**. The intention is that the

preferred circuit pack be active whenever it is healthy. Once a failing preferred Tone-Clock circuit pack has been replaced or repaired, the system will make it active as soon as possible.

Control over interchanges for an EPN is accomplished in essentially the same ways as items 1 and 3 in the PPN case above. In addition, when the non-preferred Tone-Clock circuit pack in an EPN is active, and the preferred circuit pack is repaired and proven capable of filling its roles, the system will automatically interchange back to it as soon as possible.

Software Maintenance Interchange

Interchanges may be instigated by software Tone-Clock maintenance in two ways.

1. A scheduled Tone-Clock circuit pack interchange occurs according to the parameters set by the **change system-parameters maintenance** command. This can be disabled or set to run weekly, but the standard (default) situation is for it to occur daily, at the time specified in the system-parameters list for scheduled maintenance to begin. This interchange will be blocked if the lock switches are set, if the non-preferred Tone-Clock circuit pack in an EPN has been selected with the **set tone-clock** command, if the standby Tone-Clock has been set to the busyout state, or if the clock generation capability of the standby Tone-Clock circuit pack is known to be impaired. When this scheduled interchange occurs, the standby Tone-Clock circuit pack becomes active for a period of 20 seconds to test its ability to generate clock signals, and then is returned to standby mode.
2. Unscheduled interchanges occur when on-board Tone-Clock circuit pack maintenance, or ongoing switch maintenance tests of **TONE-BD, TONE-PT**, or **TDM-CLK** uncover failures serious enough to raise any MAJOR or MINOR alarm against the active Tone-Clock circuit pack.

International Settings [G3r V2]

The TN780 Tone-Clock circuit pack uses three firmware configuration parameters for international support [G3r V2]. The following two are automatically set by the software load for the targeted country:

- The circuit pack's country-code (USA, ITALY, AUSTRALIA, etc)
- The circuit pack's companding mode (mu-Law or A-Law)

The third configuration parameter is used only for Italy (country code: ITALY), and selects whether *new* versus *old* ISPT (Istituto Superiore Poste Telegrafi) tones will be used for dial and confirmation tones. Values for dial confirmation tone can be set independently on the **change system-parameters miscellaneous** form. Whenever such changes are made, the effects are

immediately enforced on all TN780 Tone-Clock circuit packs without disrupting tone or timing services.

Table 9-394. Italian Tone Settings

Tone	New ISPT Value(default)	Old ISPT Value
Dial	continuous	cadenced
Confirmation	cadenced	continuous

In addition the TN780 allows customization of up to six system tones in order to meet specific country needs. These changes are made via the **change system-parameters country-options** form.

The TN2182 allows the same Internation changes as the TN780 but allows the customization of up to 24 system tones in order to meet specific country needs. These changes are made via the **change system-parameters country-options** form.

How to Replace the Tone-Clock Circuit Pack

Replacing the Tone-Clock circuit pack is a service-disrupting procedure on Port Networks with a single Tone-Clock, because the Tone-Clock circuit pack is always needed to generate clocks for its network. For EPN Tone-Clock replacement where no second Tone-Clock circuit pack exists, only that EPN is affected. When the circuit pack is removed, all calls are dropped immediately, the EPN enters emergency transfer within one minute, and no calls can be set up from or to that EPN. However, if the PPN Tone-Clock is removed for replacement in a Standard Reliability Option system, the System Emergency Transfer feature is activated within milliseconds, and the entire system is disrupted; no calls can be placed, and existing calls are dropped.

When replacing the Tone-Clock circuit pack, always make sure to replace it with the appropriate Tone-Clock circuit pack for the system. Three circuit pack codes are supported by G3r systems:

TN768 This is the general purpose Tone-Clock circuit pack for port networks on a G3r switch. It can be used in every situation except as the Master Tone-Clock circuit pack when a Stratum 3 Clock is administered.

TN780 The Stratum 3 Clock feature requires the use of this circuit pack code for the PPN (in both carriers of High and Critical Reliability systems). The Stratum 3 Clock will operate only with this code as the Master Tone-Clock circuit pack. The TN780 circuit pack is upward compatible with the TN768 code, and can be used in any place a TN768 would be allowed. The TN780 is used in many countries outside the U.S. where the TN768 does not provide local tones.

TN2182 This Tone-Clock-Detector may be used anywhere a TN768 or TN780 is used with the exception of configurations requiring Stratum 3 Clock. The TN2182 may be used in all country configuraions.

Port Networks with a Single Tone-Clock Circuit Pack:

This procedure is destructive.

1. Pull out the defective Tone-Clock circuit pack. This will remove the clocks and cause the system to activate emergency measures:
   - For the PPN Tone-Clock, the system will immediately go into the Emergency Transfer state.
   - For an EPN Tone-Clock, all calls to and from the EPN will drop and and the EPN will activate Emergency Transfer within about one minute, but the rest of the system should operate normally.
2. Insert a new Tone-Clock circuit pack. The system will detect the return of the clocks and will automatically recover as follows:
   - If the Tone-Clock circuit pack being replaced is in the Processor Port Network, the system will perform a **reset system 2 (system cold 2 restart)** automatically. First, all red LEDs of the PPN will come on and off within 30 seconds. Then, all red LEDs of any Expansion Port Networks will come on and go off within the next 30 seconds.
   - If the Tone-Clock circuit pack being replaced is in an Expansion Port Network, the system will reset the EPN **(EPN cold restart)** and all the red LEDs of the EPN will come on and go off within 30 seconds.

3. If the red LEDs come on but do not go off within 30 seconds, pull the circuit pack out and reseat it. If the LEDs perform as expected this time, continue with step 6. Otherwise, there may be a problem with the TDM Bus; possibly a bent pin in the Tone-Clock circuit pack slot. Follow the directions in the TDM-BUS maintenance section.
4. If the red LEDs did light, as explained above, then go to Step 6. If the red LEDs do NOT light, as explained above, then go on to Step 5.
5. Restart the affected Port Network:
   - In the PPN, restart the system via the **reset system 2** command.
   - In an EPN, restart the EPN by resetting its Expansion Interface circuit pack via the **reset port-network PN# 2** command, using the Port Network number of the affected EPN. (Use the **list cabinet** UU command to determine the Port Network number for a given cabinet and carrier.)

   If this step should fail, follow normal escalation procedures.
6. Test the new Tone-Clock circuit pack to verify that it is functioning properly, using the **test tone-clock UUC long** command, and verify that the system is operational by placing several phone calls. Where possible, try calls into, out from, and within the affected Port Network.

   If the system is not operating properly, follow normal escalation procedures.

Port Networks with Two Tone-Clock Circuit Packs:

1. Use the **list cabinet** command to determine the Port Network number of the cabinet and carrier containing the Tone-Clock circuit pack to be replaced. If both Tone-Clock circuit packs in a Port Network need to be replaced, first replace and test the one that is in standby mode. Make sure that it is healthy and active before replacing the second one. Make sure the Tone-Clock circuit pack to be replaced is in Standby Mode by displaying its status via the **status port-network** command or making sure its yellow LED is off.

The active/standby state of a Tone-Clock circuit pack may also be determined by looking at its LED. A continuously lit red LED on the Tone-Clock circuit pack indicates a reported fault on one or more of the maintenance objects on the circuit pack. Flashing patterns of the yellow and green LEDs correspond to the following service states:

Table 9-395. Tone-Clock LED Flashing Codes

Condition	Tone-Clock Circuit State	Explanation
flashing yellow 2.7 seconds on .3 seconds off	active	An external timing source is being used as a synchronization reference*.
flashing yellow .3 seconds on 2.7 seconds off	active	The local oscillator on the Tone-Clock circuit pack is being used as a synchronization reference.
yellow on continuously	active	The circuit pack has been reset but has not been told which synchronization source to use.
yellow LED off	standby	The circuit pack is in standby mode, (neither generating tones nor supplying clocks).
"jingle bells" green and yellow .1 sec on, .2 sec off, .1 sec on, .4 sec off, .4 sec on, .4 sec off	standby	Maintenance software is testing the standby circuit pack (the standby Tone-Clock is providing tones).
"double blink" yellow .3 sec on, .3 sec off, .3 sec on, 2.4 sec off,	active	TN2182 has lost all external references and is in holdover mode.
other green and yellow patterns	active	Maintenance software is testing the active circuit pack.
random yellow	standby	If the circuit pack is a TN2182, the yellow LED may come on and off intermittently as ETR-PTs on the board are used for tone detection services.

* For a Tone-Clock in the master port network, the external source is the primary or secondary DS1 source, or a Stratum 3 clock. For a Tone-Clock in a slave port network, the external source is the Expansion Interface circuit pack.

2. If the Tone-Clock circuit pack to be replaced is active, then switch to the other Tone-Clock circuit pack by doing the fol lowing:

   - **set tone-clock UUC**—Where UUC is the Standby Tone-Clock cir cuit pack.

     NOTE:
     When Port Network Connectivity Duplication is active, the system generally expects an EPN to have its "preferred" Tone-Clock circuit pack active. For the first Port Network in a given cabinet, this is carrier A. For a second PN in a given cabinet this is carrier E. There is no "preferred" tone clock for the PPN, regardless of reliability options.

   - **status system**—Verify the Tone-Clock circuit pack switche d to the other Tone-Clock circuit pack or check the LEDs. The yellow LED of the new Standby Tone-Clock circuit pack should be off (provided maintenance is not running on it) and the yellow LED of the active Tone-Clock circuit pack should be blinking.

   - If the interchange was not successful, the standby Tone-Clock circuit pack may be defective. In particular, if the error message "must use override" is displayed, fix the standby Tone-Clock circuit pack before attempting to replace the active one.

3. If the Tone-Clock circuit pack to be replaced is in the PPN, it is recommended, but not required, that the SPE carrier containing it be locked in standby mode by executing an interchange if necessary, and locking the SPE-Select switches. This protects you from disrupting service in case of inadvertent errors in replacing the circuit pack. See "Replacing SPE Circuit Packs" in Chapter 5, "Responding to Alarms and Errors".

   NOTE:
   If the SPE-Select switches are locked, be sure to release them at the conclusion of the replacement procedure.

4. Pull out the defective Tone-Clock circuit pack. No calls should be affected. If this is a TN2182 circuit pack, some ETR-PTs may be in use and removal of the pack will affect some individual users. It may be less disruptive to busyout the standby TN2182 before removing it.

5. Insert a new Tone-Clock circuit pack of the appropriate code in the same slot where the defective Tone-Clock circuit pack was removed.

6. Test the new Tone-Clock circuit pack via the **test tone-clock UUC long** command to make sure it is functioning properly. If the Tone-Clock circuit pack is being replaced due to loss of c locks, the Clock Health Inquiry (#46) will still report a failure, proceed with the next step.

7. To verify that the new Tone-Clock circuit pack can generate clocks for the system, switch to the new Tone-Clock with **set tone-clock UUC override**, and execute **test tone-clock UUC**. (In a PPN, the SPE-Select switches must be in the auto position.)

CAUTION:

If the new Tone-Clock circuit pack is not able to generate system clocks, this procedure becomes destructive. The system will detect a loss of clock and recover accordingly.

In this case if the Tone-Clock circuit pack being replaced is in the PPN the system will perform a reset system 2 (cold 2 restart) automatically. If the Tone-Clock circuit pack being replaced is in an EPN, the system will reset the EPN (EPN cold restart). After either type of restart, the faulty Tone-Clock circuit pack will be in standby mode. Since the replacement procedure was not successful, follow normal escalation procedures.

If the new Tone-Clock circuit pack is able to generate system clo cks, there will be no system disruption.

8. Place several phone calls.
9. After replacing a Tone-Clock circuit pack in an SPE, if the SPE lock switches were set during the procedure, they should be released. Additionally, after repairs in an EPN, the **set tone-clock UUC** command should be used if required to make the preferred Tone-Clock circuit pack active.

Hardware Error Log Entries and Test to Clear Values

Tone-Clock Circuit Pack Error Log Entries					
Error Type	**Aux Data**	**Associated Test**	**Alarm Level**	**On/Off Board**	**Test to Clear Value**
0*	0	Any	Any	Any	test tone-clock UUC sh
1 (a)	0	Circuit pack removed or SAKI Sanity Test (#53)	MINOR	ON	
18 (b)	0	busyout tone-clock UUC	WARNING	OFF	release tone-clock UUC
23 (c)	0	None	WARNING	OFF	
125 (d)		None	MINOR	ON	
126 (e)		None	MINOR	ON	
257		Control Channel Test (#52)	MINOR	ON	test tone-clock UUC r 20
513 (f)	Any	None			
769 (g)	4358	None			
1538 (h)	Any	None	MINOR	ON	
2049 (i)	0	Clock Health Inquiry Test (#46)	MAJOR	ON	set tone-clock UUC override
2305 (i)	0	Clock Health Inquiry Test (#46)	MAJOR	ON	set tone-clock UUC override
2561 (j)	1003	None	MAJOR	ON	
3329 (k)	0	None	MINOR/ WARNING†	OFF	set tone-clock UUC
3840 (l)	Any	None			
3848 (m)	0	None			set tone-clock UUC override
3872 (m)	0	None			set tone-clock UUC override
3999 (n)	Any	None			

* Run the Short Test Sequence first. If all tests pass, run the Long Test Sequence. Refer to the appropriate test description and follow the recommended procedures.

† Minor alarms on this MO may have been downgraded to Warning alarms based on the values used in the **set options** command.

Notes:

a. The circuit pack has totally stopped functioning or was physically removed from the system. The alarm is logged approximately 11 minutes after the circuit pack is removed or the SAKI Sanity Test (#53) fails.

   If the circuit pack is not present in the system, insert a circuit pack in the slot indicated by the error to resolve the error.

   If the circuit pack is present in the system, it is faulty and must be replaced. See the preceding section, "How to Replace the Tone-Clock Circuit Pack" on page T-152.

   If the faulty circuit pack is in standby mode,a MINOR alarm is raised, but no other system action is taken. If the circuit pack is the active Tone-Clock, further effects of this error depend on which Reliability Option is administered for the switch.

Effect of Error Type 1 on an Active Tone-Clock Circuit Pack

Reliability Option	Location of Tone-Clock Circuit Pack: PPN	Location of Tone-Clock Circuit Pack: EPN
Standard	System Emergency Transfer (entire system affected)	Emergency Transfer in the affected EPN
High	Interchange to standby Tone-Clock in the PPN	Emergency Transfer in the affected EPN
Critical	Interchange to standby Tone-Clock in the PPN	Interchange to standby Tone-Clock in the affected EPN

If an interchange is attempted and the system is unable to activate the standby Tone-Clock, Emergency Transfer is activated. If the problem is in the PPN the entire system is affected. Otherwise only the EPN in question is affected. When this happens, both circuit packs are faulty and must be replaced. See the preceding section, "How to Replace the Tone-Clock Circuit Pack" on page T-152.

If a successful interchange occurs in response to a failure of the active Tone-Clock, or if a standby Tone-Clock fails, the faulty Tone-Clock should be replaced.

b. The indicated Tone-Clock circuit pack has been made unavailable via the **busyout tone-clock UUC** command. This error applies only to High or Critical Reliability systems (an active Tone-Clock may not be busied out). To resolve this error, execute **release tone-clock UUC**.

c. The circuit pack has been logically administered but not physically installed. Installing the circuit pack will resolve the alarm.

d. A wrong circuit pack is inserted in the slot where this circuit pack is logically administered. To resolve this problem, either remove the wrong circuit pack and insert the logically administered circuit pack OR use the **change circuit-pack** command to readminister this slot to match the circuit pack inserted.

e. The cabinet/carrier specified in the PORT field of the error log entry booted up without a Tone-Clock circuit pack, or with a one that cannot communicate at all with the system. The error is logged five minutes after the port network is restarted. If no circuit pack is present, install one of the proper code. If there is a circuit pack present, replace it. See the preceding section, "How to Replace the Tone-Clock Circuit Pack" on page T-152. If replacement does not solve the problem, follow normal escalation procedures.

f. This circuit pack has an on-board hardware failure. Replace the circuit pack using the procedure described in preceding section, *How to Replace the Tone-Clock Circuit Pack*.

g. This error can be ignored, but look for other errors on this circuit pack.

h. The circuit pack was taken out of service because of an excessive rate of uplink messages. Use **test tone-clock UUC long** to reset the circuit pack and put it back into service. If the command is not successful, replace the circuit pack using the procedure described in the preceding section, *How to Replace the Tone-Clock Circuit Pack*. If the alarmed circuit pack is the active Tone-Clock of a duplicated pair, first interchange Tone-Clocks via the **set tone-clock UUC** command to avoid a service outage. If the error occurs again within 15 minutes, follow normal escalation procedures.

i. These errors indicate the loss of one or more clock signals from the reported Tone-Clock circuit pack, which was active at the time of the error. The effect of any of these errors is described in the table for error type 1. Diagnosis of the problem is the same for all four error types, with the exception noted below.

   1. Examine the Hardware Error Log for errors reported against circuit packs in the same Port Network, especially TDM-CLK, TONE-BD, H-ADAPTR, SW-CTL, and EXP-INTF. Follow the repair or replacement procedures indicated for any such errors found.

   2. If the error is not corrected by resolving errors found in step 1, the Tone-Clock circuit pack should be replaced. See the preceding section, "How to Replace the Tone-Clock Circuit Pack" on page T-152.

CAUTION:
Replacing the circuit pack and retesting it with the **test tone-clock** *command is not adequate to retire this alarm and return the Tone-Clock Circuit Pack to full service; the Clock Health Inquiry test (#46) will continue to fail. Because the ability to generate clocks was considered lost, once any repairs have been made it is necessary to execute the* **set**

tone-clock UUC override *command, forcing the circuit pack to become active. If the problem has not actually been corrected, this action may cause a disruption in service for active digital facilities users.*

3. If error 2305 or 3848 persists, all clock signals from the indicated board were lost. If the reported Tone-Clock circuit pack is in a Port Network with duplicated Tone-Clocks, the problem may lie with the circuit pack responsible for selecting the active Tone-Clock circuit pack (the *t/c selector*).

   - For a PPN, the t/c selector is the MSSNET circuit pack on the active SPE.
   - For an EPN in a system with a Center Stage Switch, the t/c selector is the active EXP-INTF circuit pack.
   - For an EPN in a Direct Connect system, the t/c selector is the active EXP-INTF circuit pack that is connected to the PPN. (The **list fibers** command can be used to determine which EXP-INTF this is.)

   The t/c selector circuit pack of interest is the one which was active at the time the error was logged. This is the currently active t/c selector unless there has been an SPE interchange for PPN problem, or a PNC interchange for EPN problem, In order to determine whether an interchange has occurred since the TONE-BD error, examine the **display initcauses** log for SPE interchanges, and PNC-DUP entries in the hardware error log for PNC interchanges.

   If the t/c selector circuit pack was not replaced as part of the previous step, replace it now. Follow procedures described in "Replacing SPE Circuit Packs" in Chapter 5, "Responding to Alarms and Errors" for the MSSNET circuit pack, or in the EXP-INTF section of this chapter for the Expansion Interface.

4. If the error has not been corrected at this point, there is a problem with the TDM Bus within the Port Network containing the reported Tone-Clock circuit pack. This may include TDM Bus intercarrier cables, Bus terminators, bent pins on the backplane, and errors on any circuit pack plugged into the same Port Network. Refer to the TDM-BUS section.

5. If the problem persists, follow normal escalation procedures.

j. A Tone-Clock circuit pack with a code invalid for this system has been inserted into the cabinet/carrier shown in the Hardware Error Log. To resolve this error, refer to the ‘‘How to Replace the Tone-Clock Circuit Pack’’ section for an appropriate circuit pack code, and replace the Tone-Clock circuit pack according to the appropriate procedure.

k. The system attempted but failed to interchange Tone-Clock circuit packs. (This error occurs only in Port Networks with duplicated Tone-Clocks.) The fault may lie in the standby Tone-Clock or in the circuit pack that controls selection of the active Tone-Clock (the *t/c selector*). The goal of the following procedure is to ensure that both Tone-Clocks can be interchanged into while either t/c-selector circuit pack is active.

1. Examine the Error Log for errors reported against circuit packs in the same Port Network, paying special attention to TDM-CLK, TONE-BD, H-ADAPTR, SW-CTL, and EXP-INTF. Follow the procedures indicated for any such errors found. After eliminating the above potential problem sources, proceed with the following steps.

2. Determine which circuit pack was controlling the choice of Tone-Clock at the time the error occurred.

   - For a PPN, the t/c selector is the MSSNET circuit pack on the active SPE.
   - For an EPN in a system with a Center Stage Switch, the t/c selector is the active EXP-INTF circuit pack.
   - For an EPN in a Direct Connect system, the t/c selector is the active EXP-INTF circuit pack that is connected to the PPN. (The **list fiber** command can be used to determine which EXP-INTF this is.)

   The t/c-selector circuit pack of interest is the one which was active at the time the error was logged. An SPE or PNC interchange since the time of the error may have made that circuit pack the current standby. Determine whether an interchange affecting the t/c selector has occurred since the TONE-BD error. When investigating a PPN Tone-Clock, examine the **list initcauses** display for SPE interchanges, which would affect the MSSNET. When investigation an EPN Tone-Clock, look for PNC-DUP entries in the hardware error log for PNC interchanges, which would affect the EXP-INTF.

3. If the t/c selector has not undergone an interchange since the error occurred, go to the next step. If such an interchange has taken place, interchange back to the formerly active t/c selector. (Use the **reset system interchange** command when investigating a PPN Tone-Clock. Use the **reset pnc interchange** command when investigating an EPN Tone-Clock.) If the interchange attempt fails due to other errors, resolve those problems first.

4. Interchange the Tone-Clock circuit packs using the **set tone-clock UUC** command. If the command succeeds, the interchange which previously failed has been accomplished and the problem has been satisfactorily resolved. If it fails, proceed to the next step. (You may want to proceed in any case to definitively test all relevant components.)

5. Interchange the t/c selector using **reset system interchange** if investigating a PPN, or **reset pnc interchange** if investigating an EPN. If errors prevent this interchange, resolve them first.
6. Attempt again to interchange Tone-Clocks with the **set tone-clock UUC** command.

   If the Tone-Clock interchange failed for both t/c selectors:

   Replace the standby Tone-Clock circuit pack which could not be interchanged into and return to this step. (See "How to Replace the Tone-Clock Circuit Pack" on page T-152.) Test the new circuit pack as follows:

   a. Execute the set tone-clock UUC command.
   b. Execute a reset system interchange or reset pnc interchange, which ever applies to the port network under ivestication.
   c. Execute the set tone-clock UUC command again.

      If these commands successfully complete, the problem has been resolved.

   If the Tone-Clock circuit packs successfully interchange when one SPE or PNC is active, but not when the other one is:

   The t/c-selector circuit pack on the failing side is suspect.

   a. Replace the MSSNET or EXP-INTF board that is active when the Tone-Clock interchange fails. (Follow procedures in 'Replacing SPE Circuit Packs" in Chapter 5, "Responding to Alarms and Errors" for the MSSNET Circuit pack; for the Expansion Interface, see EXP-INT in Chapter 9, "Maintenance Object Repair Procedures".)
   b. Make sure the new t/c selector is active and execute the set tone-clock UUC command.

   If both Tone-Clocks can be interchanged into, and interchanges succeed when either t/c selector is active, the problem has been resolved. If the problem persists after following the above steps, follow normal escalation procedures.

l. Error 3840 is not service-affecting and can be ignored. It indicates that the circuit pack has received a bad control message from the switch.

m. Error type 3999 indicates that the circuit pack sent a large number of control channel messages to the switch within a short period of time. If error type 1538 is also present, then the circuit pack was taken out-of-service due to hyperactivity. If error type 1538 is not present, then the circuit pack has not been taken out-of-service, but it has generated 50% of the messages necessary to be considered hyperactive. This may be completely normal during heavy traffic periods. However, if this error type is logged when the circuit pack is being lightly used, it may indicate a problem with the circuit pack or the equipment attached to it.

System Technician-Demanded Tests: Descriptions and Error Codes

Always investigate tests in the order presented in the table below when inspecting errors in the system. By clearing error codes associated with the *SAKI Reset Test* for example, you may also clear errors generated from other tests in the testing sequence.

Order of Investigation	Short Test Sequence	Long Test Sequence	Reset Board Sequence	D/ND*
SAKI Reset Test (#53) (a)		X		D
Clock Health Test (#46)	X	X		ND
Control Channel Loop Around Test (#52)(a)	X	X		ND
Tone Generator Crosstalk Test (#90) (b)		X		ND
Tone Generator Transmission Test (#40)(b)	X	X		ND
Tone Generator Audit/Update Test (#41)(b)	X	X		ND
TDM Bus Clock Circuit Status Inquiry Test (#148) (c)	X	X		ND
TDM Bus Clock Slip Inquiry Test (#149)(c)(e)	X	X		ND
TDM Bus Clock PPM Inquiry Test (#150)(c)	X	X		ND
TDM Bus Clock Parameter Update Test (#151) (c)	X	X		ND
Board Type Check Test (#574) (c)	X	X		ND
Standby Reference Health Check Test (#651) (c,d)		X		ND

* D = Destructive, ND = Non-destructive

Notes:

a. Refer to XXX-BD for descriptions of these tests.

b. Refer to TONE-PT for descriptions of these tests.

c. Refer to TDM-CLK for descriptions of these tests.

d. This test runs only on the standby Tone-Clock circuit pack in a Port Network with duplicated Tone-Clocks (High or Critical Reliability systems). The circuit pack must be a TN780 with firmware version 2 or above.

Clock Health Inquiry Test (#46)

This inquiry reads special data stored in memory to determine if this Tone-Clock circuit pack had a loss of any of three clock types:

- SYSCLK
- SYSFM
- SYSDCLK

If this data indicates this Tone-Clock circuit pack had a loss of any of these clocks, the inquiry reports FAIL. In addition, if TDM-CLK error 1 is at threshold, this test will FAIL. TDM-CLK error 1 indicates a suspect clock is at the edge of its specified frequency. If the circuit pack did not have a loss of clock or TDM-CLK error 1 at threshold, the inquiry reports PASS.

This is not really a test, in the sense that it simply reports status held by the system, and does not generate new information or raise alarms. If this test fails with no error code, there is at least one Major alarm against a Tone-Clock circuit pack. If this test fails with an error code of 1, there is at least one Minor off-board alarm against a TDM-CLK.

Table 9-396. TEST #46 Clock Health Inquiry Test

Error Code	Test Result	Description/ Recommendation
	ABORT	Internal System Error. 1. Retry the command at 11-minute intervals for a maximum of 5 times. 2. If the test continues to abort, follow normal escalation procedures.
none	FAIL	This Tone-Clock circuit pack had an apparent loss of clock. One or more of error types 2049, 2305, 3834, and 3872 will appear in the error log. Correct the problem according to the appropriate error log entries. Once this test fails, the only way to make it pass, and to retire the associated alarm, is to repair the problem and to execute the **set tone-clock UUC override** command against the indicated Tone-Clock circuit pack.

Continued on next page

Table 9-396. TEST #46 Clock Health Inquiry Test — *Continued*

Error Code	Test Result	Description/ Recommendation
1	FAIL	This Tone-Clock circuit pack is suspect of having a clock at the edge of its specified frequency. A Tone-Clock circuit pack with this problem can cause Expansion Interface circuit packs and SNI circuit packs to go out-of-frame or report no neighbor conditions, thus causing EPNs, Expansion Archangel Links (EALs), Remote Neighbor Links (RNLs), and/or Local Neighbor Links LNLs) to go down. 1. Replace the Tone-Clock circuit pack identified in the error log. Refer to the ‘‘How to Replace the Tone-Clock Circuit Pack’’ section. 2. If the error persists, follow normal escalation procedures.
	PASS	This Tone-Clock circuit pack has not reported a loss of clock.

TONE-PT (Tone Generator)

MO Name As It Appears In Alarm Log	Alarm Level	Initial System Technician Command To Run (a)	Full Name of MO
TONE-PT	MAJOR	test tone-clock UUC short	Tone Generator
TONE-PT	MINOR	test tone-clock UUC short	Tone Generator
TONE-PT	WARNING	release tone-clock UUC	Tone Generator

a. UU is the universal cabinet number (1 for PPN, 2 -44 for EPNs). C is the carrier designation (A, B, C, D, or E).

NOTE:
Replacing the tone/clock circuit pack requires a special procedure which is described in the documentation for TONE-BD. That section also describes the LED display for this board.

The tone generator resides on the Tone/Clock circuit pack and provides all system tones such as dial tone, busy tone, and so on. If an active tone generator fails, its port network may not have tones (see the Tone Generator Transmission Test #40). For instance, a user may go off-hook and hear no dial tone. This problem will affect only users on the same port network in which the faulty Tone-Clock circuit pack resides. The system will be able to process certain type of calls (that is, internal calls will succeed while outgoing calls will not).

The Tone-Clock circuit pack also provides the clocks for the system and can serve as the synchronization reference. Therefore, when resolving alarms on the Tone-Clock circuit pack, the TDM-CLK (TDM Bus Clock) and SYNC (Synchronization) Maintenance documentation should be utilized as well as the TONE-BD (Tone-Clock Circuit Pack) Maintenance documentation.

See the section on TONE-BD Maintenance in this manual for a discussion of the relationship of Tone-Clock circuit packs with the various Reliability Options.

Hardware Error Log Entries and Test to Clear Values

Tone Generator Error Log Entries					
Error Type	**Aux Data**	**Associated Test**	**Alarm Level**	**On/Off Board**	**Test to Clear Value**
0*	0	Any	Any	Any	test tone-clock UUC r 1
1(a)	17664	Tone Generator Audit/	MAJOR/	ON	test tone-clock UUC r 2
		Update Test (#41)	MINOR†		
18(b)	0	busyout tone-clock UUC	WARNING	OFF	release tone-clock UUC
130(c)		None	MINOR	ON	test tone-clock UUC Sh
257(d,f)	17667	None	MINOR	ON	
513(e,f)	17666	Tone Generator Audit/ Update Test (#41)	MINOR	ON	test tone-clock UUC r 3
769	Any	Transmission Test (#40)	MAJOR/ MINOR†	ON	test tone-clock UUC r 3
1025		Crosstalk Test (#90)	MAJOR/ MINOR†	ON	test tone-clock UUC l r 2
1281(g)	Any	Tone Generator Audit/ Update Test (#41)	MINOR	ON	test tone-clock UUC r 3

* Run the Short Test Sequence first. If all tests pass, run the Long Test Sequence. Refer to the appropriate test description and follow the recommended procedures.

† MAJOR alarm if the alarmed Tone-Clock circuit pack is not duplicated; MINOR if it duplicated within the same Port Network.

Notes:

a. A failure in the tone generation facility on the indicated circuit pack has been detected. Replace the circuit pack. See "How to Replace the Tone-Clock Circuit Pack" on page T-152 in the TONE-BD section.

b. The indicated Tone-Clock circuit pack has been made unavailable via the **busyout tone-clock UUC** command. It only applies to systems which have the High or Critical Reliability Option administered, because only a

standby Tone-Clock circuit pack may be made busy by that command. To resolve this error, execute the **release tone-clock UUC** command for the alarmed circuit pack.

c. This error type indicates that the circuit pack has been removed or has been insane for more than 11 minutes. To clear the error, reinsert or replace the circuit pack.

d. The tone generation facility is having problems verifying that tones have been connected as requested.

e. The tone generation facility may or may not be able to generate tones.

f. Infrequent errors, at a rate which does not bring up an alarm, probably do not affect service, unless there are customer complaints of no tones, or incorrect tones which can not be explained in any other way. However, if an alarm is raised because this error is being repeatedly logged, then the circuit pack should be replaced. See "How to Replace the Tone-Clock Circuit Pack" on page T-152 in the TONE-BD section.

g. The system-parameters country-options administration are setup such that a TN780 or TN2182 are required and the existing tone-clock circuit pack will not provide the needed functionality. The Base Tone Generation Set on page 1 or the custom tones beginning on page 2 of the system-parameters country options form may have values not supported by the existing tone-clock.

   This error (1281) indicates that the system parameters country-options form has custom tones translated and that the alarmed tone board does not support the customized tones. TN768 tone boards do not support any customized tones. TN780 tone boards support up to 6 customized tones using the following frequencies/levels only:

   Silence

   350Hz at 17.25 dB

   425Hz at 4.0 dB

   425Hz at 11.0 dB

   425Hz at 17.25 dB

   440Hz at 17.25 dB

   350Hz+425Hz at 4.0 dB

   350Hz+440Hz at 13.75 dB

   480Hz at 17.25 dB

   620Hz at 17.25 dB

   440Hz+480Hz at 19.0 dB

   404Hz at 11.0 dB

   404Hz at 16.0 dB

   480Hz+620Hz at 24.0 dB

404Hz+425Hz at 11.0 dB

375Hz+425Hz at 15.0 dB

404Hz+450Hz at 11.0 dB

1000Hz at 0.0 dB

1000Hz at +3.0 dB

525Hz at 11.0 dB

1400Hz at 11.0 dB

System Technician-Demanded Tests: Descriptions and Error Codes

Always investigate tests in the order presented in the table below when inspecting errors in the system. By clearing error codes associated with the *SAKI Reset Test* for example, you may also clear errors generated from other tests in the testing sequence.

Order of Investigation	Short Test Sequence	Long Test Sequence	Reset Board Sequence	D/ND*
SAKI Reset Test (#53) (a)		X		D
Clock Health Test (#46) (b)	X	X		ND
Control Channel Loop Around Test (#52) (a)	X	X		ND
Tone Generator Crosstalk Test (#90)		X		ND
Tone Generator Transmission Test (#40)	X	X		ND
Tone Generator Audit/Update Test (#41)	X	X		ND
TDM Bus Clock Circuit Status Inquiry Test (#148) (c)	X	X		ND
TDM Bus Clock Slip Inquiry Test (#149)(c)(e)	X	X		ND
TDM Bus Clock PPM Inquiry Test (#150) (c)	X	X		ND
TDM Bus Clock Parameter Update Test (#151) (c)	X	X		ND
Board Type Check Test (#574) (c)	X	X		ND
Standby Reference Health Check Test (#651) (c,d)		X		ND

* D = Destructive; ND = Nondestructive

Notes:

a. Refer to XXX-BD (Common Port Circuit Pack) section for descriptions of these tests.

b. Refer to TONE-BD (Tone-Clock Circuit Pack) section for descriptions of these tests.

c. Refer to TDM-CLK (TDM Bus Clock) section for descriptions of these tests.

d. This test only runs on the Standby Tone-Clock circuit pack in a Port Network with more than one Tone-Clock circuit pack (High or Critical Reliability Option). The circuit pack must be a TN780 code with firmware revision 2 or above.

e. Test #149 does not run on the TN2182.

Tone Generator Transmission Test (#40)

The purpose of this test is to verify that the tone generation hardware on the tone-clock circuit pack is capable of generating a subset of system tones and a set of test tones. This test does not verify all system tones the tone generator produces during normal system operation.

The test is performed in two parts. For the first part, the Tone Generator is told to generate the touch-tone digits. The digits are received and checked by a Tone Detector touch-tone detector. If any of the digits fail, the test is repeated using a touch-tone detector in another Tone Detector circuit pack.

For the second part, the Tone Generator is told to generate call progress tones that are detected and identified by a tone detector. These tones are:

- 440 Hz
- 2225 Hz
- Digital Count

The tone generator is then told to generate a sequence of test tones whose output levels are measured by a tone detector. These tones are:

- 404 Hz at 0 dB
- 1004 Hz at -16 dB
- 1004 Hz at 0 dB
- 2804 Hz at 0 dB

A Tone Detector general purpose tone detector listens for the tones and measures the quality of the tone. If any of the measured values are not within limits, the test is repeated using a general purpose tone detector in a different Tone Detector circuit pack. If the values are still out of the limits, the test will fail.

For all the failure cases of Test #40, do the following:

1. Check that all Tone Detector circuit packs have the same companding mode as that administered for the system. Correct the situation if there is a mismatch.
2. Run the long test sequence: **test tone-clock PC long repeat 1**.
3. If the problem persists, replace the Tone-Clock circuit pack by following the steps outlined in the ‘‘How to Replace the Tone-Clock Circuit Pack’’ section

Table 9-397. TEST #40 Tone Generator Transmission Test

Error Code	Test Result	Description/ Recommendation
None	ABORT	The system was not able to allocate all the resources needed for this test or there was an Internal System Error.
1	ABORT	The system could not allocate all the resources needed to test the DTMF tones.
1001	ABORT	The system was not able to put the tone generation facility in the appropriate mode to test it.
1002	ABORT	The system could not allocate time slots for the test connection. This can happen when the system is heavily loaded. If the system is not heavily loaded, then test the TDM Bus via the **test tdm port-network PN#** command. Refer to TDM-BUS section for details. 1. Retry the command at 1-minute intervals a maximum of 5 times. 2. If the test continues to abort, follow normal escalation procedures.
1003	ABORT	The system could not allocate a tone receiver for the test connection. This can happen when the system is heavily loaded or there is not a Tone Detector circuit pack in the port network where this test is being executed. 1. Make sure there is a Tone Detector circuit pack in the same port network. 2. If a Tone Detector circuit pack is missing, install one in the same port network. 3. Allow approximately 1 minute for Tone Detector maintenance to run on the newly inserted Tone Detector circuit pack. 4. Retry the command at 1-minute intervals a maximum of 5 times. 5. If the test continues to abort, follow normal escalation procedures.

Continued on next page

Table 9-397. TEST #40 Tone Generator Transmission Test — *Continued*

Error Code	Test Result	Description/ Recommendation
1022	ABORT	[G3r V2] Tone detection for the system is administered as wide broadband (tone detection mode 5), and the Tone Detector used for this test was not a TN420C. (the only circuit packs with this capability). GPTD ports on other types of Tone Detector circuit packs are taken out of service since they cannot provide the administered function. 1. Change the tone-detection mode administered on the system-parameters country-options form (see *DEFINITY Communications System Generic 3 V2 Implementation,* 555-230-653, Or 2. Remove all non-TN420C circuit packs from the system.
2000	ABORT	Response to the test request was not received within the allowable time period. System resources required for this test are not available. 1. Retry the command at 1-minute intervals a maximum of 5 times. 2. If the test continues to abort, follow normal escalation procedures.
2100	ABORT	System resources required for this test are not available. 1. Retry the command at 1-minute intervals a maximum of 5 times. 2. If the test continues to abort, follow normal escalation procedures.
1 (a)	FAIL	DTMF generation failed for the active tone generator.
105 (a)	FAIL	Generation of 440-Hz failed.
109 (a)	FAIL	Generation of 2225-Hz failed.
110 (b)	FAIL	Generation of 404-Hz level invalid.
111 (b)	FAIL	Generation of 1004-Hz low level invalid.
112 (b)	FAIL	Generation of 1004-Hz high level invalid.
113 (b)	FAIL	Generation of 2804-Hz level invalid.

Continued on next page

Table 9-397. TEST #40 Tone Generator Transmission Test — *Continued*

Error Code	Test Result	Description/ Recommendation
115 (b,c)	FAIL	Generation of digital count sequence invalid.
120 (a)	FAIL	Generation of quiet tone failed.
1044 (a)	FAIL	DTMF generation failed to generate Digit 1 for the standby tone generator.
1045 (a)	FAIL	DTMF generation failed to generate Digit 5 for the standby tone generator.
1046 (a)	FAIL	DTMF generation failed to generate Digit 9 for the standby tone generator.
1047 (a)	FAIL	DTMF generation failed to generate Digit D for the standby tone generator.
	PASS	The tone generation facility is able to generate and transmit all the tones.

Notes:

Except in Port Networks containing more than one Tone-Clock circuit pack, replacing the circuit pack is a service disrupting procedure. The test should be run several times with more than one failure before the replacement policy specified in the following notes is executed. Use the procedure described in *How to Replace the Tone-Clock Circuit Pack* in the TONE-BD section.

a. All the failure error codes marked with (a) may affect users if the failure is on the active tone generator. When this type failure is detected, the system will attempt to move the tone generation function to the alternate Tone-Clock circuit pack, if one is present in the affected Port Network. When the tone generation facility fails in this way, especially in a Port Network without duplicated Tone-Clock circuit packs, the faulty Tone-Clock should be replaced promptly.

b. All the failure error codes marked with (b) are almost transparent to the user. Again, when this type failure is detected, the system will attempt to move the tone generation function to the alternate Tone-Clock circuit pack, if one is present in the affected Port Network. Users may or may not hear any noisy tones. This type of failure affects maintenance on other objects. Maintenance may not be able to run on other objects which use

the tone generation facility (that is, Tone Detector Circuit Pack maintenance). In this case, the Tone-Clock circuit pack can be replaced as suitable to the customer.

c. Error code 115 may also be caused by TDM Bus corruption. This normally means a physical problem with bent backplane pins, TDM/LAN Bus cabling, or TDM/LAN Bus terminators. Such physical problems should especially be suspected if board replacement or other physical activity has occurred just before this error is observed.

   Use **display errors** to look for errors on other circuit packs in the carriers of the same Port Network as the indicated Tone-Clock. If any are found, they should be resolved if possible, and the Tone-Clock circuit pack retested. If this does not clear the problem, the Tone-Clock circuit pack should be replaced and the new one tested. If the problem persists, follow instructions for TDM Bus maintenance in this manual.

Tone Generator Update/Audit Test (#41)

The active tone generation facility is refreshed with all the time slot tone information. This test also triggers in-line error messages the Tone-Clock circuit pack generates when it detects problems by itself.

A check is also made between the type of tone-clock being tested and the type of tone-clock needed based on system administration. The administration on the system-parameters country-options form may imply that a TN780 is required

Table 9-398. TEST #41 Tone Generator Update/Audit Test

Error Code	Test Result	Description/ Recommendation
none	ABORT	The system was not able to allocate all the resources needed for this test.
2100	ABORT	System resources required for this test are not available.
1	FAIL	The system requires a TN780 tone-clock to support the administered country-options tone generation parameters. 1. Check the administration on the system-parameters country-option form. Specifically, the Base Tone Generation Set on page 1 and any custom tone administration beginning on page 2. 2. Replace existing tone-clock circuit packs with TN780.
	PASS	The tone generation facility has been successfully refreshed with its time-slot translation and system administration is consistent with this type of tone-clock. 1. Display the Hardware Error Log via the **display errors** command to make sure this circuit pack did not generate new errors. 2. If errors persist, follow normal escalation procedures.

Tone Generator Crosstalk Test (#90)

This test checks the ability of the Tone Generator to talk on a specific time slot. The tone generator is told to talk on a specific time slot. The other idle time slots are checked to make sure the Tone Generator put the tone on only the specified time slot

Table 9-399. TEST #90 Tone Generator Crosstalk Test

Error Code	Test Result	Description/ Recommendation
None	ABORT	Internal System Error 1. Retry the command at 1-minute intervals a maximum of 5 times. 2. If the test continues to abort, follow normal escalation procedures.
1001	ABORT	The system was not able to put the tone generation facility in the appropriate mode to test it.
1002	ABORT	The system could not allocate time slots for the test connection. This can happen when the system is heavily loaded. If the system is not heavily loaded, then test the TDM-BUS via the **test tdm port-network PN#** command. Refer to TDM-BUS section for details.
2000	ABORT	Response to the test request was not received within the allowable time period.
2100	ABORT	Could not allocate the necessary system resources to run this test. 1. Retry the command at 1-minute intervals a maximum of 5 times. 2. If the test continues to abort, follow normal escalation procedures.

Continued on next page

Table 9-399. TEST #90 Tone Generator Crosstalk Test — *Continued*

Error Code	Test Result	Description/ Recommendation
	FAIL	The Tone Generator could be defective. In a Port Network with more than one Tone-Clock circuit pack, the system will attempt to move the tone generation function to the alternate one. 1. Test the Tone-Clock circuit pack again via the **test tone-clock UUC** command. 2. If the test fails again, look at the Hardware Error Log for Tone Detector circuit pack errors. 3. If there are Tone Detector circuit pack errors, refer to Tone Detector Maintenance documentation (DTMR-PT, GPTD-PT, CLAS-PT, ETR-PT) to resolve these errors first. 4. If there are no Tone Detector circuit pack errors, then the Tone-Clock circuit pack should be replaced. See "How to Replace the Tone-Clock Circuit Pack" on page T-152 in the TONE-BD section.
	PASS	The tone generation facility is able to put tones out.

TSC-ADM (Administered Temporary Signaling Connections)

MO Name As It Appears In Alarm Log	Alarm Level	Initial System Technician Command To Run (a)	Full Name of MO
TSC-ADM	none	none	Administered Temporary Signaling Connections

No alarms are generated for Administered Temporary Signaling Connections (TSC-ADM,also called ADM TSCs).

Administered temporary signaling connections provide a path through ISDN-PRI networks for supplementary D-channel messages. ISDN-PRI applications such as the Distributed Communications System (DCS) use temporary signaling connections to exchange user information across an ISDN-PRI network. What makes Administered TSCs unique is that these particular TSCs stay active for an extended period of time, similar to a permanent data connection. These ADM TSCs are used for DCS features that require Non-Call Associated (NCA) TSCs, and the ADM TSC provides the logical channel function in a DCS network.

An NCA TSC is a virtual connection established within a D-channel without associating any B-channel connections. The connection provides user-to-user service by exchanging USER INFORMATION messages without associated B-channel connections.

An Administered TSC is a special NCA TSC defined for the DCS over the ISDN-PRI D-channel. The ADM TSC has an administratively defined endpoint and is established for an extended period of time.

There are two types of ADM TSCs:

- Permanent

  These are established by the originating PBX (Near-end ADM TSC) or by the terminating PBX (Far-end ADM TSC). Once these ADM TSCs are established, they remain active.

- As-Needed

  These are established only when needed.

ADM TSC maintenance provides a strategy to verify that a far-end can respond to an ISDN-PRI USER INFORMATION TSC heartbeat message, thereby indicating that user-user signaling is functioning. In addition, maintenance can retrieve the status of the ADM TSC's connection state.

Since ADM TSCs are administered on a per signaling group basis, the health of an ADM TSC also depends on the state of the D-channel or D-channel pair administered per signaling group. Refer to ISDN-SGR documentation for details on ISDN-PRI NFAS and D-channel Backup maintenance.

The two administration commands for ADM TSCs are as follows:

- **add signaling group** number
- **change signaling group** number

The two maintenance commands for ADM TSCs are as follows:

- **test tsc-administered signaling group** number [/tsc index]
- **status tsc-administered signaling group** number [/tsc index]

Hardware Error Log Entries and Test to Clear Values

ADM TSC Error Log Entries					
Error Type	**Aux Data**	**Associated Test**	**Alarm Level**	**On/Off Board**	**Test to Clear Value**
3840-3967(a)	tsc index #	test tsc-administered			

Notes:

a. There is no Test to Clear Value for error types 3840-3967. These error types provide the following additional data that may prove useful when tracking down problems.

   Any of these errors indicates that a TSC Heartbeat Inquiry Test was run on an active far-end Administered TSC from the switch. Upon receiving the heartbeat message, the network communicated that the call was unable to complete. As a result, the error was logged. Check the signaling group status of the D-channel or D-channel pair via the **status signaling-group <group>** command for the Administered TSC. Check the status of the Administered TSC via the **status tsc-administered** command. Also check the administration of the Administered TSC on the switch.

   This error may only be affecting service for some DCS customers. Upon receipt of this error condition, the switch will tear down and re-establish the ADM TSC within 20 minutes.

System Technician-Demanded Tests: Descriptions and Error Codes

Always investigate tests in the order presented in the following tables when inspecting errors in the system. By clearing error codes associated with the *TSC Heartbeat Inquiry Test,* for example, you may also clear errors generated from other tests in the testing sequence.

Order of Investigation	Short Test Sequence	Long Test Sequence	D/ND*
TSC Heartbeat Inquiry Test (#604)			ND

* D = Destructive; ND = Nondestructive

TSC Heartbeat Inquiry Test (#604)

This test can be invoked by system technician personnel for any ADM TSC administered in the switch. Most of the error conditions in Table 9-400 will not log an error, but switched services may take some type of recovery action in certain instances.

This test sends a USER INFORMATION TSC heartbeat message inquiry across an ADM TSC to determine if the far-end can respond to a USER INFORMATION TSC heartbeat message.

Table 9-400. TEST #604 TSC Heartbeat Inquiry Test

Error Code	Test Result	Description/ Recommendation
2100	ABORT	Could not allocate the necessary system resources to run this test. 1. Reissue the **test tsc-administered** command at 1 minute intervals a maximum of 5 times. 2. If the test continues to abort, escalate the problem.
1005	ABORT	The Administered TSC does not exist. 1. Display the administration for the Administered TSC. 2. If an Administered TSC exists, reissue the **test tsc-administered** command. 3. If the test continues to abort, escalate problem.
1113	ABORT	The D-channel is out-of-service. 1. Refer to the ISDN-LNK (ISDN-PRI Signaling Link Port) Maintenance documentation.

Continued on next page

Table 9-400. TEST #604 TSC Heartbeat Inquiry Test — *Continued*

Error Code	Test Result	Description/ Recommendation
1145	ABORT	There is congestion in the network. 1. Issue the **status tsc-administered** command at 1 minute intervals a maximum of 5 times. 2. If the congestion does not clear, disable and enable the Administered TSC via the **change sig-group <group>** command. **NOTE:** To disable the Administered TSC, display the (administration) Signaling Group Form via the **change sig-group <group>** command where <group> refers to the number of the signaling group under which the suspect TSC is administered. Change the Enable field to ‘‘n.’’ To enable the ADM TSC, change the “Enable’’ field to ‘‘y.’’ 3. If the congestion still does not clear, check other nodes in the network. If congestion persists, then escalate the problem.
1146	ABORT	The congestion just occurred in the network. 1. Issue the **status tsc-administered** command at 1 minute intervals a maximum of 3 times. 2. If congestion does not clear, disable and enable the Administered TSC via the **change sig-group <group>** command. **NOTE:** To disable the Administered TSC, display the (administration) Signaling Group Form via the **change sig-group <group>** command where <group> refers to the number of the signaling group under which the suspect TSC is administered. Change the Enable field to ‘‘n.’’ To enable the ADM TSC, change the “Enable’’ field to ‘‘y.’’ 3. If congestion still does not clear, check the other nodes in the network. If the congestion persists, then escalate the problem.

Continued on next page

Table 9-400. TEST #604 TSC Heartbeat Inquiry Test — *Continued*

Error Code	Test Result	Description/ Recommendation
1147	ABORT	The ADM TSC is being torn down. 1. Issue the **status tsc-administered** command at 1 minute intervals a maximum of 3 times. 2. If ADM TSC is still down, disable and enable the ADM TSC via the **change sig-group <group>** command. **NOTE:** To disable the ADM TSC, display the (administration) Signaling Group Form via the **change sig-group <group>** command where <group> refers to the number of the signaling group under which the suspect TSC is administered. Change the Enable field to ‘‘n.’’ To enable the ADM TSC, change the “Enable’’ field to ‘‘y.’’ 3. If the ADM TSC is still down, check the other nodes in the network. If the ADM TSC is still down, then escalate the problem.
1148	ABORT	The ADM TSC is enabled, but inactive (near-end). 1. Disable and enable the ADM TSC. 2. Reissue the **test tsc-administered** command. 3. If the ADM TSC is still inactive, check the other nodes in the network.
1149	ABORT	The ADM TSC is disabled. 1. Enable the TSC, and see if the status indicates ‘‘active.’’ 2. Reissue the **test tsc-administered** command. 3. If the TSC still disabled, remove the ADM TSC from the system.
1181	ABORT	Ran out of ADM TSC resources. 1. Reissue the **test tsc-administered** command at 1-minute intervals a maximum of 3 times. 2. If test continues to abort, escalate the problem.

Continued on next page

Table 9-400. TEST #604 TSC Heartbeat Inquiry Test — *Continued*

Error Code	Test Result	Description/ Recommendation
1182	ABORT	The BX.25 link is down at the gateway. 1. Disable the ADM TSC. 2. Check the status of the gateway link via the **status link link-no** command. 3. Once the gateway link indicates an ‘‘in-service’’ state, enable the Administered TSC. 4. Reissue the **test tsc-administered** command. 5. If the test still aborts, escalate the problem.
2000	ABORT	The Administered TSC is not responding to a TSC heartbeat inquiry. 1. Retry the **test tsc-administered** command at 1 minute intervals a maximum of 3 times. 2. If the problem continues to fail, obtain the status of the D-channel or D-channel pair associated with the ADM TSC via the **status sig-group <group>** command. If the D-channel is INS (i.e., in-service) and the status of the ADM TSC appears to be active, then disable and enable the ADM TSC through administration. **NOTE:** To disable the ADM TSC, display the (administration) Signaling Group Form via the **change sig-group <group>** command where <group> refers to the number of the signaling group under which the suspect TSC is administered. Change the “Enable’’ field to ‘‘n.’’ To enable the ADM TSC, change the “Enable’’ field to ‘‘y.’’ 3. Reissue the **test tsc-administered** command. 4. If the test fails, check the ADM TSC node on the other side of the network to verify that the ADM TSC is indeed active. 5. Escalate the problem.

Continued on next page

Table 9-400. TEST #604 TSC Heartbeat Inquiry Test — *Continued*

Error Code	Test Result	Description/ Recommendation
2012	ABORT	Internal system error. 1. Reissue the **test tsc-administered** command at 1 minute intervals a maximum of 5 times. 2. If the test continues to abort, escalate the problem.
1	FAIL	The Administered TSC is not active (far-end). 1. Reissue the **test tsc-administered** command. 2. Verify that the Administered TSC node on the other side of the network is active. 3. Disable and enable the Administered TSC. 4. Retry the **test tsc-administered** command. 5. If test fails, escalate the problem.
2	FAIL	Facility IE (Information Element) reject. 1. Check all other nodes in the network, and make sure Administered TSC is active. 2. Escalate the problem.
	PASS	The Administered TSC responded to a heartbeat.

TTR-LEV (TTR Level)

MO Name As It Appears In Alarm Log	Alarm Level	Initial System Technician Command To Run	Full Name of MO
TTR-LEV	WARNING	(a)	TTR Level
TTR-LEV	MINOR	(a)	TTR Level
TTR-LEV	MAJOR	(a)	TTR Level

a. See Repair Procedure for the TTR-LEV below.

TN748 and TN420 Tone Detector circuit packs and TN744 Call Classifier circuit packs provide tone receivers for detecting various types of signaling tones. These circuit packs are shared resources that serve all users of the PBX. This discussion uses the following terms and abbreviations (note that the maintenance-related system parameters form uses different names than the alarm and error logs):

Table 9-401. Tone Detector Types

Type of Tone Receiver	Maintenance Object	Also Known As	Alternate Abbreviation	Location
Dual-tone Multifrequency Tone Receiver	DTMR-PT	Touch Tone Receiver	TTR	4 per TN420/TN748
General Purpose Tone Detector	GPTD-PT	Call Progress Tone Receiver	CPTR	2 per TN420/TN748
Call Classifier	CLSFY-PT		CCTR	8 per TN744

TN748s and TN420s each have 4 DTMR-PTs and 2 GPTD-PTs. DTMR-PTs interpret dual-tone multifrequency (DTMF) calling signals and translate them into logical digits 0 through 9, *, and #. GPTD-PTs detect call progress tones, modem answer tones, and transmission test tones.

TN744 Call Classifier circuit packs have 8 CLSFY-PTs. These ports detect DTMF tones and classify network and MFC (multifrequency compelled) signaling tones. (That is, CLSFY-PTs can function as DTMR-PTs or GPTD-PTs, and have other additional capacities).

When a user goes off-hook to place a call, dial tone is returned to the user, indicating that a tone detector is connected and ready to receive and interpret tones. The tone detector is in use until the total number of digits needed is

collected or until a time-out occurs. If all tone detectors in the system are being used simultaneously, the next user to go off-hook will not receive dial tone until a tone detector becomes available. It is therefore necessary to have a sufficient number of tone detectors in the system to prevent delays in receiving dial tone. The **list measurements tone-receiver** command shows the level of tone detector usage. For more information on this command, refer to the following documents:

- *DEFINITY Communications System Generic 3 V2 Implementation,* 555-230-653
- *DEFINITY Communications System Generic 3 V2 Traffic Reports,* 555-230-511

In order to prevent dial-tone delays and other shortcomings in system performance, threshold levels for the 3 types of tone receivers are administered on the **change system-parameters maintenance** form. Whenever the number of tone receivers in service falls below the administered threshold for that type of tone receiver, an alarm is logged against the TTR Level maintenance object. At this point, the system is operating properly, but call processing capacity is reduced. Another alarm is logged if the number falls to zero. At this point, system operation is severely compromised.

Typical causes of these events are:

1. The threshold for GPTD-PTs or DTMR-PTs is administered incorrectly on the maintenance-related system parameters form.
2. Too many GPTD-PTs, DTMR-PTs, or CLSFY-PTs have been taken out of service, possibly by maintenance software or a demand busyout.
3. A tone detector circuit pack has been removed or suffered a fatal failure, resulting in the loss of all its ports.
4. The system has an insufficient number of TN748/TN744/TN420 circuit packs.

Repair Procedure for TTR-LEV

To resolve a TTR-LEV alarm:

1. **Display errors** and use the TTR-LEV Error Log Table to determine which type of tone receiver has fallen below its threshold.
2. Enter **change system-parameters maintenance**, and check the administered value. On the form, TTR represents DTMR-PTs, CPTR represents GPTD-PTs, and Call Classifier represents CLSFY-PTs. If the threshold value is set too high, change it to a lower value and wait a minute for the alarm to clear.

   To determine the correct thresholds, first find the total number of TN478/TN420 Tone Detector and TN744 Call Classifier circuit packs in the system using the **list configuration** command. Then calculate the total

number of tone receiver ports of each type. Each Tone Detector circuit pack has 4 TTR (DTMR) ports and 2 CPTR (GPTD) ports. Each TN744 Call Classifier circuit pack has 8 Call Classifier (CLSFY-PT) ports.

For each type of tone receiver, if the total number of ports installed in the system is less than the administered threshold, then either add more circuit packs to the system or reduce the threshold to match the number already in the system. If the TTR Level alarm is still present, then proceed to Step 3.

3. **Display errors** for error type 18 and look for GPTD-PTs, DTMR-PTs, or CLSFY-PTs that have been busied out.

   For each of the busied-out ports:

   - Determine why the port was busied out.
   - If the port can be placed back into service, then test the port via the **test port UUCSSpp** command.
   - If all tests pass, **release port** and wait 1 minute for the TTR Level alarm to clear.

   If this does not clear the TTR Level alarm, proceed to Step 4.

4. **Display alarms** and determine the location of the circuit pack with the alarmed GPTD-PT, DTMR-PT, or GPTD-PT.

   Test board UUCSS long rep 3 for that circuit pack.

   If this does not clear the TTR Level alarm, replace the Tone Detector or Call Classifier circuit pack with the alarmed GPTD-PT, DTMR-PT or CLSFY-PT.

Hardware Error Log Entries and Test to Clear Values

TTR Level Error Log Entries					
Error Type	**Aux Data**	**Associated Test**	**Alarm Level**	**On/Off Board**	**Test to Clear Value**
1 (a)	1	None			
2 (b)	2		WARNING	OFF	
3 (c)	3	None			
4 (d)	4		WARNING	OFF	
5 (e)	5	None			
6 (f)	6		WARNING	OFF	
7 (g)	7		MAJOR	OFF	
8 (h)	8		MINOR	OFF	
9 (i)	9		MINOR	OFF	

Notes:

a. Error code 1 does not indicate a current error condition. It indicates that the number of DTMR ports in service was below the administered threshold, but is now equal to or greater than the threshold. These errors are typically generated during boot time or other transitional states when the ports are being brought into service.

b. The total number of DTMR ports currently in service is below the administered threshold. To clear the alarm, refer to the repair procedure described above.

c. Error code 3 does not indicate a current error condition. It indicates that the number of GPTD ports in service was below the administered threshold, but is now equal to or greater than the threshold. These errors are typically generated during boot time or other transitional states when the ports are being brought into service.

d. The total number of GPTD ports currently in service is below the administered threshold. To clear the alarm, refer to the repair procedure describe above.

e. Error code 5 does not indicate a current error condition. It indicates that the number of Call Classifier ports in service was below the administered threshold, but is now equal to or greater than the threshold. These errors are typically generated during boot time or other transitional states when the ports are being brought into service.

f. The total number of Call Classifier ports currently in service is below the administered threshold. To clear the alarm, refer to the repair procedure described above.

g. There are currently no DTMR ports in service. To clear the alarm, refer to the repair procedure described above.

h. There are currently no GPTD ports in service. To clear the alarm, refer to the repair procedure described above.

i. There are currently no Call Classifier ports in service. To clear the alarm, refer to the repair procedure described above.

Maintenance Object Repair Procedures UDS1-BD

U

UDS1-BD (UDS1 Interface Circuit Pack)

MO Name As It Appears in Alarm Log	Alarm Level	Initial System Technician Command to Run (a)	Full Name of MO
UDS1-BD	MINOR	test board UUCSS l	UDS1 Interface Circuit Pack
UDS1-BD	WARNING	test board UUCSS sh	UDS1 Interface Circuit Pack

a. UU is the universal cabinet number (1 for PPN, 2 - 44 for EPNs). C is the carrier designation (A, B, C, D, or E). SS is the number of the slot in which the circuit pack resides (01 to 21).

The TN464C, D, E, and F Universal DS1 Interface circuit packs provide an interface to the DS1 facility and are designed to support 24 DS0 channels on a 1.544 Mbps DS1 link or 32 DS0 channels on a 2.048 Mbps link. (The 32-channel interface is not supported on G3r V1 systems.) The DS0 channels can be administered as trunks to other switches, lines to off-premises stations, ports to line-side PRI terminating devices, or ports to other line-side non-PRI terminating devices. (DS0 channels on TN464/Bs can only be administered as trunks to other switches.) For more information on how TN464 ports can be used, see the following sections in this chapter ISDN-SGR, ISDN-TRK, ISDN-LNK, PE-BCHL, TIE-DS1, CO-DS1, DID-DS1, OPS-LINE and WAE-PT. For information on other DS1 circuit packs, see DS1-BD.

Throughout this section on the UDS1-BD MO name, the term TN464 will mean any TN464C or later suffix UDS1 circuit pack. If part of this section refers to a specific suffix TN464 board, it will be noted as such.

The UDS1 maintenance strategy includes logging in-line errors reported by the UDS1 circuit pack, running tests for error diagnosis and recovery, and raising or clearing maintenance alarms.

TN464 circuit packs support the following:

- Digital Tie, CO and DID trunks
- DS1 off-premises (OPS) lines
- Narrowband and wideband access endpoint ports
- ISDN-PRI trunks and accompanying signaling channel
- PRI endpoint ports (PE-BCHL) and accompanying signaling channel

The TN464 supports digital Tie, CO, and DID trunks, and OPS lines. On-board firmware performs call control signaling for the Tie, CO and DID trunks and OPS lines. ISDN-PRI trunk and PRI endpoint signaling (Q.921, Q.931) is received and generated by system software and is transmitted on a system link through the TN1655 Packet Interface and packet bus to the UDS1 where it is placed on the D-channel. Signaling over the DS1 link has to be synchronized between the transmitting and receiving ends to ensure error-free communication. Refer to SYNC in this chapter for details.

Each trunk, line or endpoint has its own maintenance strategy but all depend on the health of the UDS1 Interface circuit pack. Refer to the following sections for details: TIE-DS1, CO-DS1, DID-DS1, OPS-LINE, ISDN-TRK, ISDN-LNK, ISDN-SGR, WAE-PT and PE-BCHL. The maintenance strategy for the TN464 UDS1 Interface circuit pack (UDS1-BD) is very similar to the maintenance strategy for the TN767 DS1 Interface circuit pack (DS1-BD). The same commands are used for administering and testing the boards. The differences in maintenance strategy between the boards are due to the UDS1 circuit pack's direct interface to the Packet Bus which is used for ISDN-PRI signaling (ISDN-LNK). While both the TN464 and TN767 can support ISDN-PRI B-channels, ISDN-PRI D-channel signaling applications require a TN464 UDS1 circuit pack.

The TN464F or later circuit pack combined with AT&T's new 120A1 CSU Module forms an Enhanced Integrated CSU. The new 120A1 CSU Module, when combined with the functionality provided by the TN464F hardware and firmware, and new switch software, provides functionality equivalent to an external stand-alone AT&T ESF T1 CSU. The 120A1 CSU Module connects to the TN464F circuit pack on the I/O connector panel on the back of the port carrier. The new CSU Module, thus becomes an integrated part of the DEFINITY. system. Throughout the document, the term 120A1 will mean a 120A1 or later suffix CSU Module.

The Enhanced Integrated CSU is for use in the United States of America with 1.544 Mbps DS1 service. For further details on the 120A1 CSU Module see *DEFINITY Communications System Generic 1, Generic 2, and Generic 3 V1 and V2 - Integrated CSU Module Installation and Operation*.

The TN464F and 120A1 CSU Module support on-demand loopback tests that assist in the detection of faults between the TN464F circuit pack and the CSU Module, between the Integrated CSU and the optional Customer Premises Loopback Jack, or between the Integrated CSU and remote CSU. These loopback tests are explained in detail later in this UDS1-BD section, but Figure 9-120 below gives a high level overview of the loopback points.

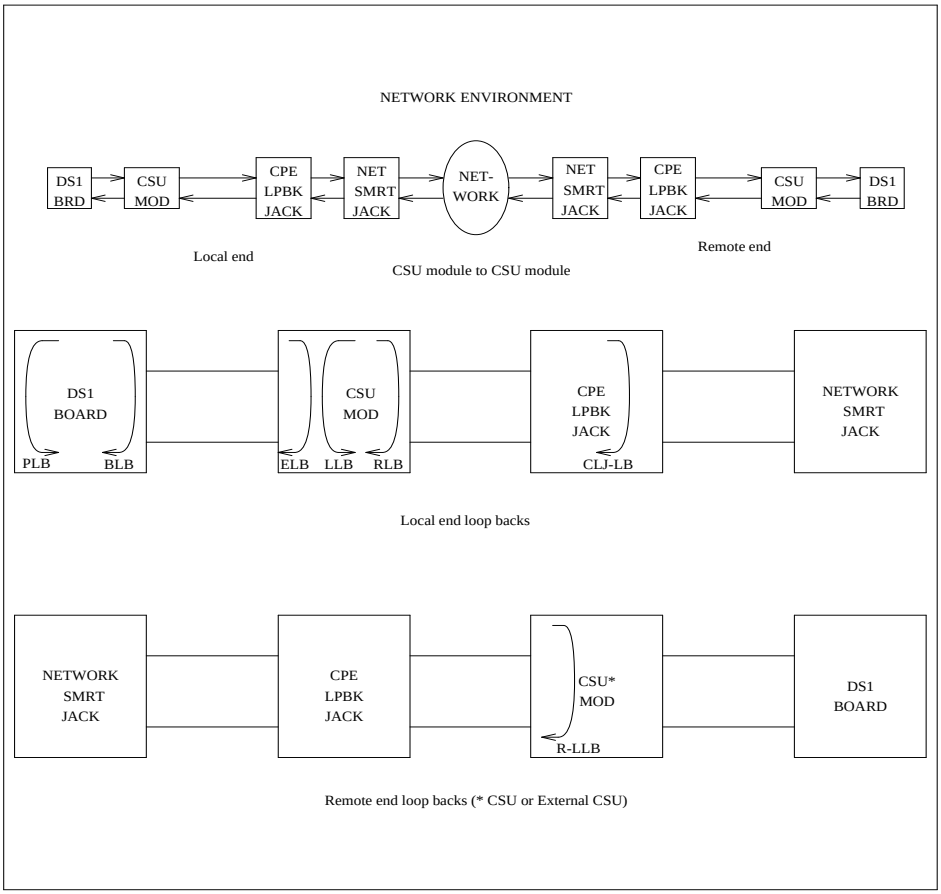

Figure 9-120. High Level Overview Of Loopback Points

The following list of acronym definitions are for Figure 9-120, “High Level Overview Of Loopback Points,” above:

- PLB = Payload Loopback
- BLB = Board Loopback
- ELB = Equipment Loopback
- LLB = Line Loopback
- RLB = Repeater Loopback
- CLJ = Loopback Jack Loopback
- R-LLB = Remote Line Loopback
- SMRT = Smart Jack
- LPBK = Loopback

Circuit Pack Administration and Options

The DS1 configuration for each circuit pack is administered on the DS1 Circuit Pack form. *Bit Rate* is set to 1.544 Mbps for 24-channel systems, and 2.048 Mbps for 32-channel systems. *Country Protocol* is used to drive layer 3 protocol decisions based on PRI specifications specific to a given country (not those related to specific features). This Country Protocol is independent of the *Country* parameter administered on the country-options system-parameters form. Different UDS1 circuit packs may be administered with different Country Protocols, allowing the switch to act as a gateway between two incompatible ISDN-PRI implementations (for example, between two different countries). US systems use country protocol 1. *Near-End CSU Type* is set to *other* for no CSU installed or for an external CSU such as an AT&T ESF T1 CSU, or *integrated* for the 120A1 CSU Module. Answering *integrated* will cause additional fields to be displayed for administering the Enhanced Integrated CSU Module. In addition to the above there are numerous other fields defining such parameters as framing modes, line coding companding mode and so on. For details, see *DEFINITY Communications System Generic 3 V2 Implementation,* 555-230-653, and *DEFINITY Communications System Generic 2.2 and Generic 3 V2 DS1/CEPT/ISDN-PRI Reference*, 555-025-107.

Two option jumpers located on the side of the TN464C/D circuit pack must be installed correctly. Figure 9-121 and Figure 9-122 on the following page show how to configure the circuit pack for 24-channel or 32-channel DS1, and for 75Ω (coaxial) or 120Ω trunk connections. The channel selection must match the parameters administered on the corresponding DS1 Circuit Pack Form. (US applications use 24 channels.)

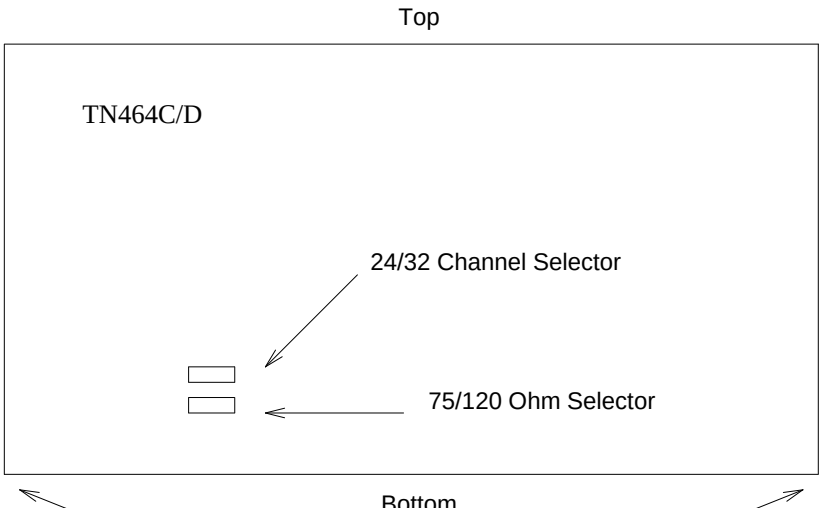

Figure 9-121. TN464C/D DS1 Option Jumpers

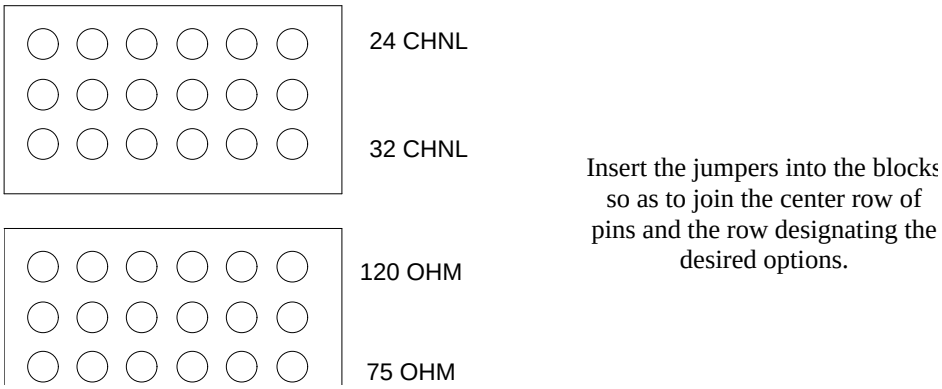

Figure 9-122. TN464C/D DS1 Option Jumpers (Continued)

The option switch located on the component side of the TN464E/F circuit pack must be set correctly. Figure 9-123 below shows how to configure the circuit

pack for 24-channel or 32-channel DS1. The channel selection must match the parameters administered on the corresponding DS1 Circuit Pack Form. (US applications use 24 Channels.)

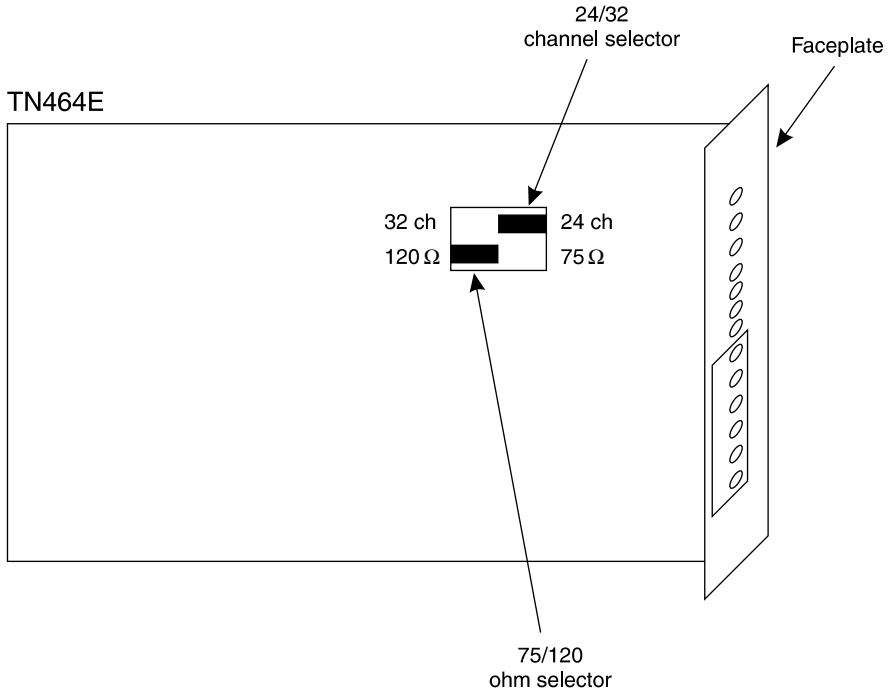

Figure 9-123. TN464E/F DS1 Option switches

Hardware Error Log Entries and Test to Clear Values

Table 9-402. DS1 Interface Circuit Pack Maintenance Error Log Entries

Error Type	Aux Data	Associated Test	Alarm Level	On/Off Board	Test to Clear Value
0*	0	Any	Any	Any	test board UUCSS
1(a)	0	Circuit pack removed or SAKI Test (#53)	MIN/WRN‡	ON	
18(b)	0	busyout board UUCSS	WARNING	OFF	release board UUCSS
23(c)	0		WARNING	OFF	add ds1 UUCSS
125(d)	none 3	None	MIN/WRN†	ON	
257	65535	Control Channel Loop Test (#52)	MINOR	ON	test board UUCSS l r 20
257(e)	Any	None			
513(f)	Any		MIN/WRN†	ON	
514(g)	46086		MIN/WRN†	ON	
769(h)	46085		MIN/WRN†	ON	
770(i)	46096		MIN/WRN†	ON	
1025(e)	4363	NPE Audit Test (#50)			
1281	Any	Loss of Signal Alarm Inquiry Test (#138)	MIN/WRN†	OFF	test board UUCSS
1300(j)	Any	Loss Of Signal Alarm Inquiry Test (#138)	WARNING	OFF	test board UUCSS
1301(k)	Any	Loss Of Signal Alarm Inquiry Test (#138)	WARNING	OFF	test board UUCSS
1302(l)	Any	Loss Of Signal Alarm Inquiry Test (#138)	MIN/WRN†	OFF	test board UUCSS
1303(m)	Any	Loss Of Signal Alarm Inquiry Test (#138)	MIN/WRN†	ON	test board UUCSS
1310(n)	Any	Board Loopback Test (#1209)	MINOR	ON	test ds1-loop UUCSS ds1/csu-loopback-tests

Continued on next page

Table 9-402. DS1 Interface Circuit Pack Maintenance Error Log Entries — *Continued*

Error Type	Aux Data	Associated Test	Alarm Level	On/Off Board	Test to Clear Value
1311(o)	Any	Equipment Loopback Test (#1210)	MIN/WRN†	OFF	test ds1-loop UUCSS ds1/csu-loopback-tests
1312(p)	Any	Repeater Loopback Test (#1211)	MIN/WRN†	OFF	test ds1-loop UUCSS ds1/csu-loopback-tests
1313(q)	Any	CPE Loopback Jack Test (#1212)	MIN/WRN†	OFF	test ds1-loop UUCSS end-loopback/span-test
1314(r)	Any	Far CSU Loopback Test (#1213)	MIN/WRN†	OFF	test ds1-loop UUCSS end-loopback/span-test
1320	Any	Loss of Signal Alarm Inquiry Test (#138)	MIN/WRN†	OFF	test board UUCSS
1321	Any	Loss of Signal Alarm Inquiry Test (#138)	MIN/WRN†	OFF	test board UUCSS
1322	Any	Loss of Signal Alarm Inquiry Test (#138)	MINOR	ON	test board UUCSS
1323	Any	Loss of Signal Alarm Inquiry Test (#138)	MIN/WRN†	OFF	test board UUCSS
1324	Any	Loss of Signal Alarm Inquiry Test (#138)	WARNING	OFF	test board UUCSS
1537(s)	46082		MIN/WRN†	ON	
1538(t)	Any		MIN/WRN†	ON	
1793	Any	Blue Alarm Inquiry Test (#139)	WARNING	OFF	test board UUCSS
1794	Any	Blue Alarm Inquiry Test (#139)	WARNING	OFF	test board UUCSS
1795	Any	Blue Alarm Inquiry Test (#139)			
	WARN ING	OFF	test board UUCSS		
2049	Any	Red Alarm Inquiry Test (#140)	MIN/WRN†	OFF	test board UUCSS
2305	Any	Yellow Alarm Inquiry Test (#141)	MIN/WRN†	OFF	test board UUCSS

Continued on next page

Table 9-402. DS1 Interface Circuit Pack Maintenance Error Log Entries — *Continued*

Error Type	Aux Data	Associated Test	Alarm Level	On/Off Board	Test to Clear Value
2306	Any	Yellow Alarm Inquiry Test (#141)	MIN/WRN†	OFF	test Board UUCSS
2561	Any	Major Alarm Inquiry Test (#142)	MIN/WRN†	OFF	test board UUCSS
2817		Minor Alarm Inquiry Test (#143)	MIN/WRN†	OFF	test board UUCSS
3073 to 3160	Any	Slip Alarm Inquiry Test (#144)	MIN/WRN†	OFF	test board UUCSS r 6
3330(u)	46083		MIN/WRN†	ON	
3585 to 3601	Any	Misframe Alarm Inquiry Test (#145)	MIN/WRN†	OFF	test board UUCSS r 6
3840(v)	Any	None			
3841(w)	4358				
3842(x)	46097				
3843(y)	46081				
3900(z)	Any	CPE Loopback Jack Test (#1212)			
3901(aa)	Any	Far CSU Loopback Test (#1213)			
3902(ab)	Any	One-Way Span Test (#1214)			
3999(ac)	Any	None			

* Run the Short Test Sequence first. If all tests pass, run the Long Test Sequence. Refer to the appropriate test description and follow the recommended procedures.

† Minor alarms on this MO may be downgraded to warning alarms based on values set in the **set options** command.

‡ If ports are assigned to the circuit pack, then a minor alarm is raised. If no ports are assigned to the circuit pack, then a warning alarm is raised. The alarm is raised after the circuit pack has been missing for a period of 15 minutes. Warning alarms are also raised against any ports administered on the circuit pack.

Notes:

a. Error 1 indicates that the circuit pack has totally stopped functioning or is not fully administered. The alarm is logged about 15 minutes after the circuit pack has been removed or 11 minutes after the SAKI Test (#53) fails.

   To be fully administered, a UDS1 circuit pack must meet all of these 3 conditions:

   1. Have an entry in the circuit plan via the **change circuit pack** command
   2. Be administered via the **add ds1 UUCSS** command
   3. Be physically inserted into the correct slot

   If the circuit pack has an entry in the circuit plan and either of the other two conditions are *not* met, a MINOR alarm is logged. To resolve the error either

   1. Make sure all conditions for administration are met and that a functioning UDS1 circuit pack is inserted in the correct slot, or
   2. Completely remove the UDS1-BD from the system using the following steps:
      a. Remove any administered DS1 trunks, access endpoints or PRI endpoints associated with the circuit pack from their trunk groups.
      b. Execute the **remove ds1 UUCSS** and **change circuit pack UUCSS** commands.

   If all the administration conditions are met for this circuit pack and the red LED is still on, follow the instructions for *LED Alarms with Error Type 1* in Chapter 7, "LED Indicators", *LED Indicators*.

b. The UDS1 Interface circuit pack has been busied out by a **busyout board UUCSS** command.

c. The UDS1-BD circuit pack is not completely administered. To be fully administered, the UDS1 circuit pack must:

   1. Have an entry in the circuit plan via the **change circuit pack** command,
   2. Be administered via the **add ds1 UUCSS** command, and
   3. Be physically inserted into the correct slot.

   A DS1 (UDS1-BD and DS1-BD) differs from most circuit packs in that inserting the circuit pack into the switch is not enough to make the board usable. It must also be administered with the **add ds1** command.

d. No Aux Data: A wrong circuit pack is inserted in the slot where this circuit pack is logically administered. To resolve this problem, either remove the wrong circuit pack and insert the logically administered circuit pack OR use the **change circuit-pack** command to readminister this slot to match the circuit pack inserted.

   Aux Data 3: The 24/32-channel option jumper setting on the circuit pack does not match the option set on the DS1 circuit pack administration form. The circuit pack must be physically removed to see the setting of the jumper.

e. This error is associated with the Common Port Circuit Pack Maintenance Test. Refer to XXX-BD (Common Port Circuit Pack) Maintenance documentation for details.

f. The UDS1 Interface circuit pack has detected a transient hardware problem. The value in the Aux Data field indicates the type of hardware problem.

4352	External RAM failure
4353	Internal RAM failure
4355	Internal ROM failure

   If the UDS1 board detects only one of these hardware problems, then the error will disappear when none of these faults are detected for 10 minutes. If the same Aux Data value is logged more than once in a 24 hour period, the circuit pack should be replaced.

g. LAN External RAM Error. This error occurs when there is a hardware fault in the PPE external RAM. The RAM is used for message buffering to and from the Packet Bus. This error should not occur regularly. If this error is seen quite frequently (10 times within 30 minutes), the circuit pack should be replaced.

h. Transmit FIFO Underflow Error. This error occurs when the circuit pack cannot find the "end of frame" bit when transmitting a frame to Packet Bus. An alarm will be raised if this error occurs three times within 10 minutes. Clear the alarm via the following commands: **busyout board UUCSS**, **reset board UUCSS**, **test board UUCSS long**, **release board UUCSS**. If the error recurs within 10 minutes, then replace the circuit pack.

i. Unable to Write LAN Translation RAM Error. This error occurs when a call is aborted because there are no available translation RAM locations for the call connection attempt. An alarm will be raised if this error occurs two times within 10 minutes. Clear the alarm via the following commands: **busyout board UUCSS**, **reset board UUCSS**, **test board UUCSS long**, **release board UUCSS**. If the error recurs within 10 minutes, then replace the circuit pack.

j. CSU Module missing. The *Near-End CSU Type* field on the *add ds1* form has been administered as *integrated* but the 120A1 CSU Module is not physically connected (or is improperly connected) to the TN464F board on the back of the port carrier.

If using the 120A1 CSU Module, plug (or replug) the CSU Module into the TN464F circuit pack's connector on the I/O connector panel on back of the carrier. Otherwise, change the *Near-End CSU Type* field using the *change ds1* form to *other*.

If this error remains after plugging the CSU Module into the board's connector, there could be a problem with the I/O connector panel.

k. CSU Module not expected. The 120A1 CSU Module is physically connected to the TN464F board on the back of the port carrier but the *Near-End CSU Type* field on the *add ds1* form has not been administered as *integrated*.

   If the 120A1 CSU Module is to be used, use the *change ds1* command to change the *Near-End CSU Type* field to *integrated*. Otherwise, physically remove the 120A1 CSU Module from the back of the port carrier.

l. DS1 configuration error. Attempting to use the 120A1 CSU Module with a TN464F circuit pack that is configured for 32-channel (2.048 Mbps) operation. The CSU Module only works with a DS1 board configured for 24-channel (1.544 Mbps) operation in the United States of America.

m. DS1 circuit pack suffix incorrect for CSU Module. The *Near-End CSU Type* field on the *add ds1* form has been administered as *integrated* but the DS1 circuit pack is not a TN464F or later suffix UDS1 board.

   If the 120A1 CSU Module is to be used, remove the circuit pack and replace it with a TN464F or later suffix board. Otherwise, use the *change ds1* command to change the *Near-End CSU Type* field to *other*.

n. BLB failure. This error occurs when the DS1 Board Loopback (BLB) demand test fails. Repeat the test using the following commands: *busyout board UUCSS*, *test ds1-loop UUCSS ds1/csu-loopback-tests*, *release board UUCSS*. If the BLB test continues to fail, then the TN464F circuit pack needs to be replaced.

o. ELB failure. This error occurs when the Integrated CSU (I-CSU) Module Equipment Loopback (ELB) test fails. This test is executed by the I-CSU during I-CSU power-up/reset (i.e.- TN464F board physically inserted and 120A1 CSU Module already installed) or when the 120A1 CSU Module is plugged on to an already initialized TN464F DS1 board. The ELB test is also executed as part of the command *test ds1-loop UUCSS ds1/csu-loopback-tests*.

   Attempt to clear the alarm via the following commands: *busyout board UUCSS*, *test ds1-loop UUCSS ds1/csu-loopback-tests*, *release board UUCSS*. If the ELB test continues to fail, then either the TN464F board, the CSU Module, or the I/O cable between the backplane and the CSU module (or any combination thereof) has failed. Attempt to isolate where the failure is occurring by re-executing the test and by replacing one piece of hardware at a time.

p. RLB failure. This error occurs when the Integrated CSU (I-CSU) Module Repeater Loopback (RLB) test fails. This test is executed by the I-CSU during I-CSU power-up/reset (i.e.- TN464F board physically inserted and

120A1 CSU Module already installed) or when the 120A1 CSU Module is plugged on to an already initialized DS1 board. The RLB test is also executed as part of the command *test ds1-loop UUCSS ds1/csu-loopback-tests*.

Attempt to clear the alarm via the following commands: *busyout board UUCSS*, *test ds1-loop UUCSS ds1/csu-loopback-tests*, *release board UUCSS*. If the RLB test continues to fail, then the CSU Module needs to be replaced.

q. CPE Loopback Jack deactivation error. This error occurs when the TN464F circuit pack could not deactivate a CPE Loopback Jack on power-up/reset or upon software request.

   Attempt to clear the alarm via the following commands: *busyout board UUCSS*, *test ds1-loopback UUCSS end-loopback/span-test*, *release board UUCSS*. If the attempt to deactivate the CPE Loopback Jack continues to fail, other steps must be taken to deactivate the loopback.

r. Far CSU Loopback deactivation error. This error occurs when the TN464F circuit pack could not deactivate a far-end CSU loopback on power-up/reset or upon software request.

   Attempt to clear the alarm via the following commands: *busyout board UUCSS*, *test ds1-loop UUCSS end-loopback/span-test*, *release board UUCSS*. If the attempt to deactivate the Far CSU loopback continues to fail, then escalate the problem.

s. LAN Bus Timeout Error. This error occurs when the circuit pack transmits too many bytes on the LAN bus for a single frame. This condition may be caused by an on-board fault or by faulty data received on one of the circuit pack's external ports. If any of the ports on this circuit pack are alarmed, refer to the repair procedures for those maintenance objects.

   If the error occurs three times within 10 minutes, the board will be isolated from the Packet Bus and the board will be alarmed. To clear the alarm and restore the board to the Packet Bus, use the following commands: **busyout board UUCSS**, **reset board UUCSS**, **test board UUCSS long**, **release board UUCSS**.

   If the problem persists, and there are no PKT-BUS alarms or port alarms, then replace the circuit pack.

t. The hyperactive circuit pack is out-of-service and may exhibit one or more of the following symptoms:

   1. The common circuit pack level tests such as Test #50 and/or Test #52 are aborting with error code 2000.
   2. The tests run on the ports of this circuit pack are returning with a NO-BOARD.
   3. A busyout/release of the circuit pack has no affect on test results.
   4. A **list configuration** command shows that the circuit pack and ports are properly installed.

u. The circuit pack is isolated from the system and all trunks or ports on this circuit pack are placed into the out-of-service state. The system will try to restore the circuit pack within 20-30 minutes. When no faults are detected for 20-30 minutes, the UDS1 Interface circuit pack is restored to normal operation. All trunks or ports of the UDS1 Interface circuit pack are then returned to the in-service state. If the board is not restored to normal operation, or the error recurs after the board was restored to normal operation, escalate the problem.

v. LAN Critical Error. A critical failure has been detected in the Packet Bus interface of the circuit pack. This failure may be due to an on-board fault or a Packet Bus fault. If the Packet Bus is alarmed, refer to the PKT-BUS Maintenance documentation for recommended repair procedures.

   This error will isolate the board from the Packet Bus and raise an alarm. If the Packet Bus is not alarmed, enter the following commands: **busyout board UUCSS**, **reset board UUCSS**, **test board UUCSS**, **release board UUCSS**. This should clear the alarm and restore the board to the Packet Bus.

   If the problem persists, and there are no PKT-BUS alarms, then replace the circuit pack.

w. These errors are not service-affecting. No action is required. These errors are reported by the circuit pack when it receives a bad control channel message from the switch. The auxiliary data identifies the following error events:

4096	Bad major heading
4097	Bad port number
4098	Bad data
4099	Bad sub-qualifier
4100	State inconsistency
4101	Bad logical link

x. The UDS1 Interface circuit pack has detected a transient hardware logic error (for example, program logic inconsistency). This error will disappear when no faults are detected for 100 minutes. The value in Aux Data field indicates the type of hardware problem.

y. Bad Translation RAM Location Found Error. This error is not service-affecting. No action is required. A Bad Translation RAM is detected, but the call continues by using another translation location.

z. LAN Receive Parity Error. This error occurs when the circuit pack detects an error in a received frame from the Packet Bus. These errors are most likely caused by a Packet Bus problem, but may be due to a circuit pack fault.

Refer to the PKT-BUS Maintenance documentation to determine if the problem is isolated to this circuit pack or if the problem is caused by Packet Bus faults.

aa. Error 3900 is used to give status information on a CPE Loopback Jack Test. The value in the Aux Data field indicates the status of the loopback test.

1 - Test is currently running.

2 - Test failed because loopback could not be activated.

3 - Test failed because test pattern could not be detected.

4 - Test has been terminated.

ab. Error 3901 is used to give status information on a Far CSU Loopback Test. The value in the Aux Data field indicates the status of the loopback test.

1 - Test is currently running.

2 - Test failed because loopback could not be activated.

3 - Test failed because test pattern could not be detected.

4 - Test has been terminated.

ac. Error 3902 is used to give status information on a One-Way Span Test. The value in the Aux Data field indicates the status of the span test.

1 - Test is currently running.

2 - Test has failed because test could not be activated.

3 - Test pattern was not received from the far end.

4 - Test has been terminated.

ad. Error type 3999 indicates that the circuit pack sent a large number of control channel messages to the switch within a short period of time. If error type 1538 is also present, then the circuit pack was taken out-of-service due to hyperactivity. If error type 1538 is not present, then the circuit pack has not been taken out-of-service, but it has generated 50% of the messages necessary to be considered hyperactive. This may be completely normal during heavy traffic periods. However, if this error type is logged when the circuit pack is being lightly used, it may indicate a problem with the circuit pack or the equipment attached to it.

System Technician-Demanded Tests: Descriptions and Error Codes

Always investigate tests in the order they are presented in Table 9-403 below when inspecting errors in the system. By clearing error codes associated with the *NPE Connection Audit Test,* for example, you may also clear errors generated from other tests in the testing sequence.

Table 9-403. System Technician-Demanded Tests

Order of Investigation	Short Test Sequence	Long Test Sequence	Reset Board Sequence	test ds1-loop	D/ND*
NPE Connection Audit Test (#50)		X			ND
Control Channel Loop Test (#52)		X			ND
Loss of Signal Alarm Inquiry Test (#138)	X	X			ND
Blue Alarm Inquiry Test (#139)	X	X			ND
Red Alarm Inquiry Test (#140)	X	X			ND
Yellow Alarm Inquiry Test (#141)	X	X			ND
Major Alarm Inquiry Test (#142)	X	X			ND
Minor Alarm Inquiry Test (#143)	X	X			ND
Slip Alarm Inquiry Test (#144)	X	X			ND
Misframe Alarm Inquiry Test (#145)	X	X			ND
Translation Update Test (#146)	X	X			ND
ICSU Status LEDs Test (#1227)	X	X			ND
SAKI Sanity Test (#53)			X		D

Continued on next page

Table 9-403. System Technician-Demanded Tests — *Continued*

Order of Investigation	Short Test Sequence	Long Test Sequence	Reset Board Sequence	test ds1-loop	D/ND*
Internal Loop Around Test (#135)			X		D
DS1/CSU Loopback Tests: DS1 Board Loopback Test (#1209) CSU Equipment Loopback Test (#1210) CSU Repeater Loopback Test (#1211)				X X X	D D D
CPE Loopback Jack Test (#1212)				X	D
Far CSU Loopback Test (#1213)				X	D
One-Way Span Test (#1214)				X	D
Inject Single Bit Error (#1215)				X	D
End Loopback/Span Test (#1216)				X	D

* D = Destructive; ND = Nondestructive

NPE Connection Audit Test (#50)

The system sends a message to the on-board microprocessor to update the network connectivity translation for the SCOTCH-NPE chip on the circuit pack

Table 9-404. TEST #50 NPE Connection Audit Test

Error Code	Test Result	Description/ Recommendation
None 2100	ABORT	System resources required for this test are not available.
1019	ABORT	Test already in progress.
	FAIL	Internal System Error 1. Retry the command at 1-minute intervals a maximum of 5 times. 2. If the test continues to abort/fail, escalate the problem.
	PASS	The circuit pack's SCOTCH-NPE chip have been updated with its translation.
0	NO BOARD	The UDS1 Interface circuit pack is not administered. 1. Administer the UDS1 Interface circuit pack by issuing the **add ds1 UUCSS** command. 2. Run the test again. 3. If the test continues to return NO BOARD, escalate the problem.

Control Channel Loop Around Test (#52)

This test queries the circuit pack for its circuit pack code and vintage and verifies its records

Table 9-405. TEST #52 Control Channel Loop Around Test

Error Code	Test Result	Description/ Recommendation
None 2100	ABORT	System resources required for this test are not available. 1. Retry the command at 1-minute intervals a maximum of 5 times. 2. If the test continues to abort, escalate the problem.
	FAIL	The circuit pack failed to return the circuit pack code or vintage. 1. Retry the command a maximum of 5 times. 2. If the problem continues, and if the circuit pack is one of the Port circuit packs, replace the circuit pack. Otherwise, if the circuit pack is part of the SPE, use the procedure described in *Replacing SPE Circuit Packs* in Chapter 5, "Responding to Alarms and Errors". 3. Retry the command a few times a maximum of 5 times. 4. If the test continues to fail, escalate the problem.
	PASS	Communication with this circuit pack is successful.
0	NO BOARD	The UDS1 Interface circuit pack is not administered. 1. Administer the UDS1 Interface circuit pack by issuing the **add ds1 UUCSS** command. 2. Run the test again. 3. If the test continues to return NO BOARD, escalate the problem.

SAKI Sanity Test (#53)

This test is destructive.

This test resets the circuit pack. The test is highly destructive and can only be initiated by a system technician-demanded **reset board UUCSS** command

Table 9-406. TEST #53 SAKI Sanity Test

Error Code	Test Result	Description/ Recommendation
None	ABORT	System resources required for this test are not available. 1. Retry the **reset board** command at 1-minute intervals a maximum of 5 times. 2. If the test continues to abort, escalate the problem.
1005	ABORT	Wrong circuit pack configuration to run this test. This error applies only to DS1 Interface circuit packs. It means the DS1 Interface circuit pack is providing timing for the system and, therefore, it cannot be reset without major system disruptions. 1. If the circuit pack needs to be reset, then set synchronization to another DS1 Interface circuit pack or to the Tone-Clock circuit pack and try again. Refer to SYNC (Synchronization) Maintenance documentation.
1015	ABORT	Port is not out-of-service. 1. Busyout the circuit pack. 2. Execute the **reset board** command again. 3. If the test aborts with this error code again, escalate the problem.
2100	ABORT	System resources required for this test are not available. 1. Retry the **reset board** command at 1-minute intervals a maximum of 5 times. 2. If the test continues to abort, escalate the problem.
1	FAIL	The circuit pack failed to reset.
2	FAIL	The circuit pack failed to restart. 1. Execute the **reset board** command again. 2. If the problem persists, replace the circuit pack.

Continued on next page

Table 9-406. TEST #53 SAKI Sanity Test — *Continued*

Error Code	Test Result	Description/ Recommendation
	PASS	The circuit pack initializes correctly. 1. Run the Short Test Sequence.
0	NO BOARD	The UDS1 Interface circuit pack is not administered. 1. Administer the UDS1 Interface circuit pack by issuing the **add ds1 UUCSS** command. 2. Run the test again. 3. If the test continues to return NO BOARD, escalate the problem.

Internal Loop Around Test (#135)

This test is destructive.

The Internal Loop Around Test is run by looping the transmitted DS1 bit stream back into the UDS1's board receiver. The loop occurs just before the DS1 facility interface. The test is highly destructive and can only be initiated by a system technician-demanded **reset board UUCSS** command.

All trunks or ports on the UDS1 Interface circuit pack must be busied out via the system technician **busyout board** command before running the Internal Loop Around Test. When the Internal Loop Around Test is initiated, maintenance software sends appropriate messages to the UDS1 Interface circuit pack to start the test. The test uses the Tone Generator and Tone Detector to exercise a bit pattern consistency test for all ports. If the transmitted and received bit patterns on a trunk or port are different, the test fails.

When the test is complete, the maintenance software sends a stop loop around message to the UDS1 Interface circuit pack to put the circuit pack back into the normal operation mode. All trunks or ports of the UDS1 Interface circuit pack are restored to the in-service state after the **release board** command is entered

Table 9-407. TEST #135 Internal Loop Around Test

Error Code	Test Result	Description/ Recommendation
2012	ABORT	Internal System Error 1. Retry the **reset board** command at 1-minute intervals a maximum of 5 times. 2. If the test continues to abort, escalate the problem.
1002	ABORT	The system could not allocate time slots for the test. The system may be under heavy traffic conditions or it may have time slots out-of-service due to TDM-BUS errors. Refer to TDM-BUS Maintenance documentation to diagnose any active TDM-BUS errors. 1. If system has no TDM-BUS errors and is not handling heavy traffic, repeat test at 1-minute intervals a maximum of 5 times. 2. If the test continues to abort, escalate the problem.

Continued on next page

Table 9-407. TEST #135 Internal Loop Around Test — *Continued*

Error Code	Test Result	Description/ Recommendation
1003	ABORT	The system could not allocate a tone receiver for the test. The system may be oversized for the number of Tone Detectors present or some Tone Detectors may be out-of-service. 1. Look for TTR-LEV errors in the Error Log. If present, refer to TTR-LEV (TTR Level) Maintenance documentation. 2. Look for TONE-PT errors in the Error Log. If present, refer to TONE-PT (Tone Generator) Maintenance documentation. 3. If neither condition exists, retry the **reset board** command at 1-minute intervals a maximum of 5 times. 4. If the test continues to abort, escalate the problem.
1004	ABORT	Received an incoming call originated on a port of the UDS1 circuit pack during the test. 1. Enter the **busyout board UUCSS** command to put all trunks or ports of the UDS1 Interface circuit pack to out-of-service state. 2. Retry the **reset board** command at 1-minute intervals a maximum of 5 times. 3. If the test continues to abort, escalate the problem.
1015	ABORT	Ports on the UDS1 Interface circuit pack have not been busied out to out-of-service. 1. Enter the **busyout board UUCSS** command to put all trunks or ports of the UDS1 Interface circuit pack into the out-of-service state. 2. Retry the **reset board** command. 3. If the test continues to abort, escalate the problem.

Continued on next page

Table 9-407. TEST #135 Internal Loop Around Test — *Continued*

Error Code	Test Result	Description/ Recommendation
1039	ABORT	The UDS1 Interface circuit pack is providing timing for the system. Therefore, it cannot be reset without major system disruption. If the UDS1 Interface circuit pack needs to be tested, set the synchronization reference to another UDS1 Interface circuit pack or to the Tone-Clock circuit pack via the following command sequence: 1. Issue the **disable synchronization-switch** command. 2. Next, issue the **set synchronization UUCSS** command. 3. Lastly, issue the **enable synchronization-switch** command.
2000	ABORT	Response to the test request was not received within the allowable time period. If Error Type 1538 is present in the Error Log, follow the maintenance strategy recommended for this error type.
2100	ABORT	Could not allocate the necessary system resources to run this test. 1. Retry the **reset board** command at 1-minute intervals for a maximum of 5 times. 2. If the test continues to abort, escalate the problem.
	FAIL	This result is described on the following page.
	PASS	All administered trunks or ports of the UDS1 Interface circuit pack pass the Internal Loop Around Test. The bit pattern consistency test is executed successfully over the path that covers a DS1 port, cable, and the external NCTE device.
0	NO BOARD	The UDS1 Interface circuit pack is not administered. 1. Administer the UDS1 Interface circuit pack by issuing the **add ds1 UUCSS** command. 2. Run the **reset board** command again. 3. If the test continues to return NO BOARD, escalate the problem.

Continued on next page

Table 9-407. TEST #135 Internal Loop Around Test — *Continued*

Error Code	Test Result	Description/ Recommendation
	FAIL	The UDS1 Interface circuit pack failed in the Internal Loop Around Test. If the UDS1 connects to a T1 network facility or another switch: 1. Retry the **reset board** command at 1-minute intervals a maximum of 5 times. 2. Enter the **list measurement ds1-log UUCSS** command to read the error seconds measurement. 3. Verify that both endpoints of the DS1 link are administered using the same signaling mode, framing mode, and line coding. 4. Check the physical connectivity of DS1 Interface circuit packs and cable. 5. Replace the local UDS1 Interface circuit pack and repeat the test. 6. Contact T1 Network Service to diagnose the remote DS1 endpoint. 7. If the test still fails, then escalate the problem in

Continued on next page

Table 9-407. TEST #135 Internal Loop Around Test — *Continued*

Error Code	Test Result	Description/ Recommendation
(cont'd.)	FAIL	If the UDS1 connects to a line-side terminating device such as a PRI terminal adapter: 1. Retry the **reset board** command at 1-minute intervals a maximum of 5 times. 2. Enter the **list measurement ds1-log UUCSS** command to read the error seconds measurement. 3. Verify that the switch DS1 and the line-side terminating device are administered using the same signaling mode, framing mode, and line coding. 4. Investigate the maintenance status of the line-side terminating device. Obtain the error seconds measurement on the terminating device (if possible). Refer to the line-side terminating device operating manual for information. 5. Check the physical connection of the UDS1 Interface circuit pack to the terminating device. Check premise distribution system (or intra-premise wiring) for physical connection failures. If the error seconds measurement is severe, investigate premise distribution system wiring for noise and distance limitation. 6. Replace the local UDS1 Interface circuit pack and repeat the test. 7. Contact the vendor of the line-side terminating device to diagnose the equipment. 8. If the test still fails, then escalate the problem.in

Loss of Signal Alarm Inquiry Test (#138)

This test verifies the synchronization status and continuity of the DS1 link. The Loss of Signal alarm indicates that the UDS1 Interface circuit pack is unable to derive the synchronization clock from the DS1 facility. When the UDS1 Interface circuit pack detects a Loss of Signal alarm, it stops providing the synchronization clock for the system if it is administered as a timing source and transmits a Yellow alarm to the remote DS1 endpoint.

When the Loss of Signal alarm is confirmed, the maintenance software places all trunks or ports of the UDS1 Interface circuit pack into the out-of-service state. The inquiry test will run every 10 minutes until the loss of signal has been restored.

The UDS1 Interface circuit pack raises a Loss of Signal alarm after the signal has been lost for about 1 second. It will not retire the alarm until the signal has returned for about 10 seconds.

This test is also used to maintain the new AT&T 120A1 CSU Module. This CSU Module, when combined with the functionality provided by the TN464F circuit pack, provides functionality equivalent to an external stand-alone AT&T ESF T1 CSU. The combination of the TN464F and 120A1 CSU Module is known as an Enhanced Integrated CSU (I-CSU).

If a TN464F circuit pack detects certain I-CSU hardware errors, it will notify maintenance. When the maintenance subsystem receives notification of the I-CSU error, it will execute this Loss of Signal Inquiry test. The test, in addition to querying for a Loss Of Signal alarm condition, will also query the TN464F board to confirm the I-CSU error. A Minor or Warning alarm will be raised depending on the severity of the I-CSU error. The trunks on the board may be taken out of service if the I-CSU error is deemed serious.

If a Loss Of Signal alarm and an I-CSU error co-exist, the Loss Of Signal alarm condition will take priority and the board and all trunks on the board will be put in the out-of-service state. Errors will be logged, however, for both.

When the maintenance subsystem receives notification that the I-CSU hardware error condition no longer exists, maintenance will restore the board and all trunks to their previous service state if the alarm can be cleared (no other I-CSU errors or Loss Of Signal alarm exist)

Table 9-408. TEST #138 Loss of Signal Alarm Inquiry Test

Error Code	Test Result	Description/ Recommendation
	ABORT	Internal System Error
2000	ABORT	Response to the test request was not received within the allowable time period. If Error Type 1538 is present in the Error Log, follow the maintenance strategy recommended for this error type.
2100	ABORT	Could not allocate the necessary system resources to run this test. 1. Retry the command at 1-minute intervals for a maximum of 5 times. 2. If the test continues to abort, escalate the problem.

Continued on next page

Table 9-408. TEST #138 Loss of Signal Alarm Inquiry Test — *Continued*

Error Code	Test Result	Description/ Recommendation
	FAIL	UDS1 Interface circuit pack detects a Loss of Signal alarm. The physical link is broken or the remote DS1 endpoint is down. All trunks or ports of this UDS1 interface circuit pack are out-of-service. If the UDS1 Interface circuit pack is designated as the supplier of the system synchronization source, then the system synchronization maintenance will adopt a source elsewhere. Refer to the SYNC section in this chapter for details. If the UDS1 connects to a T1 network facility: 1. Check the physical connection of the UDS1 Interface circuit pack and the cable. If a 120A1 CSU Module is physically connected to a TN464F board on the back of the port carrier, check the physical connection of the CSU Module and make sure the Network Interface cable is plugged into the CSU Module's NETWORK jack. 2. If the UDS1 Interface circuit pack connects to a T1 facility, call the vendor of the T1 carrier to diagnose the remote DS1 endpoint. If the UDS1 Interface circuit pack connects directly to a switch, call the system technician of the remote switch to diagnose the DS1 endpoint. If the UDS1 connects to a line-side terminating device such as a PRI terminal adapter: 1. Check the physical connection of the UDS1 Interface circuit pack to the terminating device. Check premise distribution system (or intra-premise wiring) for physical connection failures. If a 120A1 CSU Module is physically connected to a TN464F board on the back of the port carrier, check the physical connection of the CSU Module and make sure the Network Interface cable is plugged into the CSU Module's NETWORK jack. 2. Contact the vendor of the line-side terminating device to diagnose the equipment.

Continued on next page

Table 9-408. TEST #138 Loss of Signal Alarm Inquiry Test — *Continued*

Error Code	Test Result	Description/ Recommendation
1300	FAIL	The CSU Module is missing. The *Near-End CSU Type* field on the *add ds1* form has been administered as *integrated* but the 120A1 CSU Module is not physically connected to the TN464F board on the back of the port carrier. 1. If using the 120A1 CSU Module, plug the CSU Module into the TN464F circuit pack's connector on the I/O connector panel on back of the carrier. Otherwise, change the *Near-End CSU Type* field using the *change ds1* form to *other*. 2. Run the test again.
1301	FAIL	The 120A1 CSU Module is physically connected to the TN464F board on the back of the port carrier but the *Near-End CSU Type* field on the *add ds1* form has not been administered as *integrated*. 1. If the 120A1 CSU Module is to be used, use the *change ds1* command to change the *Near-End CSU Type* field to *integrated*. Otherwise, physically remove the 120A1 CSU Module from the back of the port carrier. 2. Run the test again.
1302	FAIL	Attempting to use the 120A1 CSU Module with a TN464F circuit pack that is configured for 32-channel (2.048 Mbps) operation. The CSU Module only works with a DS1 board configured for 24-channel (1.544 Mbps) operation in the United States of America. 1. If the 120A1 CSU Module is to be used, physically remove the TN464F circuit pack and reconfigure for 24-channel (1.544 Mbps) operation. 2. Reinsert the circuit pack and run the test again.

Continued on next page

Table 9-408. TEST #138 Loss of Signal Alarm Inquiry Test — *Continued*

Error Code	Test Result	Description/ Recommendation
1303	FAIL	The DS1 circuit pack Suffix is incorrect for CSU Module administration. The *Near-End CSU Type* field on the *add ds1* form has been administered as *integrated* but the DS1 circuit pack is not a TN464F or later suffix UDS1 board. 1. If the CSU Module is to be used, and the *Near-End CSU* Type field is set to integrate to allow for CSU Module administration, remove the circuit pack and replace it with a TN464F or later suffix board. Otherwise use the ***change ds1*** command to change the *Near-End CSU Type* field to *other*.
1310	FAIL	The DS1 Board Loopback (BLB) demand test (#1209) failed. 1. Repeat the test using the *test ds1-loop UUCSS ds1/csu-loopback-tests* command. 2. If the BLB test continues to fail, then replace the TN464F circuit pack. 3. Run this test again.

Continued on next page

Table 9-408. TEST #138 Loss of Signal Alarm Inquiry Test — *Continued*

Error Code	Test Result	Description/ Recommendation
1311	FAIL	The Integrated CSU (I-CSU) Module Equipment Loopback (ELB) test (#1210) failed. This test is executed by the I-CSU during I-CSU power-up/reset (i.e.- TN464F board physically inserted and 120A1 CSU Module already installed) or when the 120A1 CSU Module is plugged on to an already initialized DS1 board. The ELB test is also executed as part of the command *test ds1-loop UUCSS ds1/csu-loopback-tests*. 1. Execute the *test ds1-loop UUCSS ds1/csu-loopback-tests* command. 2. If the ELB test continues to fail, then either the TN464F board, the CSU Module, or the I/O cable between the backplane and the CSU module (or any combination thereof) has failed. Attempt to isolate the problem to one of these areas. Begin by replacing the CSU Module and running the *test ds1-loop UUCSS ds1/csu-loopback-tests* command again. 3. If the ELB test continues to fail, then replace the TN464F board and run the *test ds1-loop UUCSS ds1/csu-loopback-tests* command again. 4. If the ELB test continues to fail, the problem could be in the I/O cable between the backplane and the CSU module.

Continued on next page

Table 9-408. TEST #138 Loss of Signal Alarm Inquiry Test — *Continued*

Error Code	Test Result	Description/ Recommendation
1312	FAIL	The Integrated CSU (I-CSU) Module Repeater Loopback (RLB) test (#1211) failed. This test is executed by the I-CSU during I-CSU power-up/reset (i.e.- TN464F board physically inserted and 120A1 CSU Module already installed) or when the 120A1 CSU Module is plugged on to an already initialized DS1 board. The RLB test is also executed as part of the command ***test ds1-loop UUCSS ds1/csu-loopback-tests***. 1. Execute the ***test ds1-loop UUCSS ds1/csu-loopback-tests*** command. 2. If the RLB test continues to fail, then replace the CSU Module. 3. Run this test again.
1313	FAIL	The TN464F circuit pack could not deactivate a CPE Loopback Jack loopback. 1. Execute the ***test ds1-loop UUCSS end-loopback/span-test*** command. 2. If the attempt to deactivate the CPE Loopback Jack is not successful, check the cabling and investigate the problem at the CPE Loopback Jack. 3. Run the test again.
1314	FAIL	The TN464F circuit pack could not deactivate a far-end CSU loopback. 1. Execute the ***test ds1-loop UUCSS end-loopback/span-test*** command. 2. If the attempt to deactivate the far-end CSU loopback continues to fail, then escalate the problem.
1320	FAIL	A 120A1 CSU Module hardware failure or I-CSU Serial Interface Audit failure was detected by the TN464F UDS1 circuit pack.

Continued on next page

Table 9-408. TEST #138 Loss of Signal Alarm Inquiry Test — *Continued*

Error Code	Test Result	Description/ Recommendation
1321	FAIL	DTE LOS (loss of signal) was detected between the TN464F UDS1 board and the 120A1 CSU Module. Either the TN464F board, the 120A1 CSU Module, or the I/O cable between the backplane and the CSU module (or any combination thereof) has failed. Attempt to isolate the problem to one of these areas. 1. Replace the CSU Module and run the test again. 2. If the test continues to fail with this error code, then replace the TN464F board and run the test again. 3. If the test continues to fail with this error code, the problem could be in the I/O cable between the backplane and the CSU module.
1322	FAIL	No 5 volts power detected from the TN464F circuit pack to the 120A1 CSU Module. Problem probably due to an open fuse on the DS1 board or a faulty ICSU. **NOTE:** Do not swap DS1 boards as this may blow the fuse on the new board. 1. If the test continues to fail with this error code, then replace the CSU Module and run the test again. 2. Remove the TN464F from the system and reinsert. 3. Run the test again once the board has finished its reset. 4. If the test continues to fail with this error code, then replace the TN464F board and run the test again. 5. If the test continues to fail with this error code, the problem could be in the I/O cable between the backplane and the CSU module.
1323	FAIL	A service affecting CSU Module audit failure was detected by the TN464F UDS1 circuit pack. All administered ports on the UDS1 circuit pack are affected and maintenance software will place the ports into the out-of-service state. 1. Replace the 120A1 CSU Module.

Continued on next page

Table 9-408. TEST #138 Loss of Signal Alarm Inquiry Test — *Continued*

Error Code	Test Result	Description/ Recommendation
1324	FAIL	A non-service affecting CSU Module audit failure was detected by the TN464F UDS1 circuit pack. No ports should be affected. No immediate action is required. These errors indicate that the CSU Module hardware may have a problem, and that it should be replaced when practical to avoid further deterioration.
	PASS	DS1 signal is present and the physical link is healthy. In addition, no Integrated CSU errors are detected.
0	NO BOARD	The UDS1 Interface circuit pack is not administered. 1. Administer the UDS1 Interface circuit pack by issuing the **add ds1 UUCSS** command. 2. Run the test again. 3. If the test continues to return NO BOARD, escalate the problem.

Blue Alarm Inquiry Test (#139)

The Blue Alarm is a signal sent by the remote DS1 endpoint when it is out-of-service. The Blue Alarm Inquiry Test checks the blue alarm status of the remote DS1 endpoint.

When the UDS1 Interface circuit pack detects a Blue Alarm signal from the remote DS1 endpoint, the circuit pack will transmit a Yellow alarm to the remote DS1 endpoint and send a BLUE ALARM message to the maintenance software. When the Blue alarm is confirmed, the maintenance software places all trunks or ports of the UDS1 Interface circuit pack into the out-of-service state. The inquiry test will be run every 10 minutes until the Blue alarm is cleared.

The UDS1 Interface circuit pack takes 1 seconds to recognize and report a Blue alarm and 16 seconds to recognize and report the resolution of a Blue alarm. When the Blue alarm is cleared, the UDS1 Interface circuit pack stops transmitting the Yellow alarm and places the trunks or ports back into the service state before the Blue alarm occurs.

Line Loopback Alarm

The Line Loopback (LLB) is used by the remote DS1 endpoint to put the ICSU or DS1 board into a loopback mode. When the ICSU or DS1 board is in the LLB mode, the arriving bit pattern is regenerated and sent back. Line Loopback (LLB) Alarm is activated when the in-band activate LLB bit pattern has been arriving continuously for 5 seconds on the DS1 line. LLB is deactivated when the in-band deactivate LLB bit pattern has been arriving continuously for 5 seconds on the DS1 line.

Since LLB is a maintenance condition rendering all DS0 channels unavailable for signaling or bearer traffic, maintenance software treats this the same as a Blue Alarm.

Payload Loopback Alarm

The Payload Loopback (PLB) is used by the remote DS1 endpoint to put the switch DS1 into a loopback mode. PLB Alarm is activated when a network protocol activate bit pattern arrives over the 4Kbps ESF data link on the DS1 line. PLB is deactivated when a network protocol deactivate bit pattern arrives over the 4Kbps ESF data link on the DS1 line.

Since PLB is a maintenance condition rendering all DS0 channels unavailable for signaling or bearer traffic, maintenance software treats this the same as a Blue Alarm

Table 9-409. TEST #139 Blue Alarm Inquiry Test

Error Code	Test Result	Description/ Recommendation
	ABORT	Internal System Error
2000	ABORT	Response to the test request was not received within the allowable time period. If Error Type 1538 is present in the Error Log, follow the maintenance strategy recommended for this error type.
2100	ABORT	Could not allocate the necessary system resources to run this test. 1. Retry the command at 1-minute intervals for a maximum of 5 times. 2. If the test continues to abort, escalate the problem.
	FAIL	The remote DS1 endpoint is out-of-service.
1794	FAIL	The UDS1 Interface circuit pack detects a Line Loopback Alarm (LLB).
1795	FAIL	The UDS1 Interface circuit pack detects a Payload Loopback Alarm (PLB). If the UDS1 Interface circuit pack connects to a leased T1 facility, call the vendor of the T1 carrier to diagnose the remote DS1 endpoint. If the UDS1 Interface circuit pack connects directly to another DS1 board, call the system technician of the remote switch to diagnose the DS1 endpoint. If the UDS1 Interface circuit pack connects directly to a line-side terminating device such as a PRI terminal adapter contact the vendor of the terminating device to diagnose the equipment.
	PASS	Remote DS1 endpoint is in-service. Neither a Blue alarm nor a Line Loopback alarm nor a Payload Loopback Alarm is detected by the UDS1 Interface circuit pack.
0	NO BOARD	The UDS1 Interface circuit pack is not administered. 1. Administer the UDS1 Interface circuit pack by issuing the **add ds1 UUCSS** command. 2. Run the test again. 3. If the test continues to return NO BOARD, escalate the problem.

Red Alarm Inquiry Test (#140)

A UDS1 Interface circuit pack raises a Red alarm when the framing pattern of the incoming DS1 bit stream has been lost. The Red Alarm Inquiry Test checks the framing status of a UDS1 Interface circuit pack. A UDS1 Interface circuit pack takes 3 seconds to recognize and report a Red alarm and 10 seconds to recognize and report the resolution of a Red alarm.

When the UDS1 Interface circuit pack detects a Red alarm, the circuit pack will transmit a Yellow alarm to the remote DS1 endpoint and send a RED ALARM message to the maintenance software. After the Red alarm is confirmed, the maintenance software places all trunks or ports of the circuit pack into the out-of-service state. The inquiry test will be run every 10 minutes until the Red alarm is cleared.

When the Red alarm is cleared, the UDS1 Interface circuit pack will stop transmitting the Yellow alarm to the remote DS1 endpoint. The maintenance software restores all trunks or ports of the UDS1 Interface circuit pack to the service state before the Red alarm occurs.

Loss of Multiframe Alarm

If the UDS1 Interface circuit pack is administered using DMI-BOS signaling, the UDS1 Interface circuit pack raises a Loss of Multiframe Alarm (LMA) when it cannot interpret the incoming signaling bits to synchronize to the multiframe pattern received in the 24th channel. Once the UDS1 Interface circuit pack detects an LMA, the circuit pack will transmit a Remote Multiframe Alarm (RMA) to the remote DS1 endpoint. Maintenance software handles both Red alarm and LMA alarm(s) using the same mechanism

Table 9-410. TEST #140 Red Alarm Inquiry Test

Error Code	Test Result	Description/ Recommendation
	ABORT	Internal System Error 1. Retry the command at 1-minute intervals a maximum of 5 times. 2. If the test continues to abort, escalate the problem.
0	NO BOARD	The UDS1 Interface circuit pack is not administered. 1. Administer the UDS1 Interface circuit pack by issuing the **add ds1 UUCSS** command. 2. Run the test again. 3. If the test continues to return NO BOARD, escalate the problem.

Continued on next page

Table 9-410. TEST #140 Red Alarm Inquiry Test — *Continued*

Error Code	Test Result	Description/ Recommendation
	FAIL	The UDS1 Interface circuit pack detects a Red alarm. An out-of-frame condition occurs on the UDS1 Interface circuit pack. The UDS1 Interface circuit pack will transmit a Yellow alarm to the remote DS1 endpoint until the Red alarm is retired.

Continued on next page

Table 9-410. TEST #140 Red Alarm Inquiry Test — *Continued*

Error Code	Test Result	Description/ Recommendation
1	FAIL	The UDS1 Interface circuit pack detects a Loss Multiframe Alarm (LMA). An out-of-frame condition occurs on the UDS1 Interface circuit pack. The UDS1 Interface circuit pack will transmit a Remote Multiframe Alarm to the remote DS1 endpoint until the LMA is retired. If the UDS1 connects to a T1 network facility: 1. Verify that both endpoints of the DS1 link are administered using the same DMI-BOS signaling mode, framing mode, and line coding. 2. Check the physical connectivity of the UDS1 Interface circuit packs and cable. 3. Replace the local UDS1 Interface circuit pack and repeat the test. 4. Contact T1 Network Service to diagnose the remote DS1 endpoint. If the test still fails, then escalate the problem. If the UDS1 connects to a line-side terminating device such as a PRI terminal adapter: 1. Verify that the switch DS1 and the line-side terminating device are administered using the same signaling mode, framing mode, and line coding. 2. Investigate the maintenance status of the line-side terminating device. Refer to the line-side terminating device operating manual for information. 3. Check the physical connection of the UDS1 Interface circuit pack to the terminating device. Check premise distribution system (or intra-premise wiring) for physical connection failures. 4. Contact the vendor of the line-side terminating device to diagnose the equipment. 5. Replace the local UDS1 Interface circuit pack and repeat the test. 6. If the test still fails, then escalate the problem.
	PASS	No Red alarm is detected on the UDS1 Interface circuit pack.

Yellow Alarm Inquiry Test (#141)

Receiving a Yellow alarm from remote DS1 endpoint indicates that the remote DS1 endpoint has an out-of-frame condition. The Yellow Alarm Inquiry Test is used to determine whether the remote DS1 endpoint is transmitting a Yellow alarm. The UDS1 Interface circuit pack takes 500 msec to recognize and report a Yellow alarm and 500 msec to recognize and report that a Yellow alarm condition is cleared.

When the UDS1 Interface circuit pack detects a Yellow alarm from the remote DS1 endpoint, it will send a YELLOW-ALARM uplink message to the maintenance software. After the maintenance software receives the YELLOW-ALARM message, the Yellow Alarm Inquiry Test is run to confirm the Yellow alarm. Once the Yellow alarm is confirmed, the maintenance software places all trunks or ports on the circuit pack into the out-of-service state. The Inquiry Test will be run every 10 minutes until the Yellow alarm is cleared.

When the Yellow alarm is cleared, the maintenance software restores all trunks or ports on the UDS1 Interface circuit pack back to their previous service state before the Yellow alarm was raised.

This Yellow alarm corresponds to the yellow F2 state documented in CCITT Recommendation I.431.

Remote Multiframe Alarm

Remote Multiframe Alarm (RMA) indicates that the remote DS1 endpoint is in a Loss of Multiframe Alarm condition while the UDS1 Interface circuit pack is administered using the DMI-BOS common channel signaling. The RMA is handled as a Yellow alarm.

Yellow F5 Fault Alarm

For 32-channel E1 operation with CRC4 on, the F5 fault state is defined as a fault in the user-network interface, specifically in the direction from the user (PBX) to the network. Refer to CCITT recommendation I.431

Table 9-411. TEST #141 Yellow Alarm Inquiry Test

Error Code	Test Result	Description/ Recommendation
	ABORT	Internal System Error 1. Retry the command at 1-minute intervals a maximum of 5 times. 2. If the test continues to abort, escalate the problem.
0	NO BOARD	The UDS1 Interface circuit pack is not administered. 1. Administer the UDS1 Interface circuit pack by issuing the **add ds1 UUCSS** command. 2. Run the test again. 3. If the test continues to return NO BOARD, escalate the problem.
	FAIL	The UDS1 Interface circuit pack detects a Yellow alarm sent by the remote DS1 endpoint. An out-of-frame condition occurs on the remote DS1 endpoint. This corresponds to the Yellow F2 State.
1	FAIL	The UDS1 Interface circuit pack detects a Remote Multiframe Alarm sent by the remote DS1 endpoint. An out-of-frame condition occurs on the remote DS1 endpoint.

Continued on next page

Table 9-411. TEST #141 Yellow Alarm Inquiry Test — *Continued*

Error Code	Test Result	Description/ Recommendation
2	FAIL	The UDS1 interface circuit pack is reporting a F5 fault alarm. There is a fault in the User-Network interface from the user (PBX) to the network. An out-of-frame condition occurs on the remote DS1 endpoint. If the UDS1 connects to a T1 network facility: 1. Verify that both endpoints of the DS1 link are administered using the same DMI-BOS signaling mode, framing mode, and line coding. 2. Check the physical connectivity of the DS1 Interface circuit packs and cable. 3. Replace the local UDS1 Interface circuit pack and repeat the test. 4. Contact T1 Network Service to diagnose the remote DS1 endpoint. If the test still fails, then escalate the problem.in If the UDS1 connects to a line-side terminating device such as a PRI terminal adapter: 1. Verify that the switch DS1 and the line-side terminating device are administered using the same signaling mode, framing mode, and line coding. 2. Investigate the maintenance status of the line-side terminating device. Refer to the line-side terminating device operating manual for information. 3. Check the physical connection of the UDS1 Interface circuit pack to the terminating device. Check premise distribution system (or intra-premise wiring) for physical connection failures. 4. Replace the local UDS1 Interface circuit pack and repeat the test. 5. Contact the vendor of the line-side terminating device to diagnose the equipment. 6. If the test still fails, then escalate the problem.
	PASS	Neither a Yellow alarm nor a Remote Multiframe Alarm nor a F5 state alarm is being received from the remote DS1 endpoint.

Major Alarm Inquiry Test (#142)

The Major alarm raised by a UDS1 Interface circuit pack indicates that the average bit error rate on the DS1 facility is greater than 1/1000. The Major Alarm Inquiry Test is used to determine that the received DS1 bit error rate is greater than 1/1000. The UDS1 Interface circuit pack takes 10 seconds to recognize and report a Major alarm and 10 seconds to recognize and report that a Major alarm condition is cleared.

When the UDS1 Interface circuit pack detects a Major alarm, it will send a MAJOR-ALARM message to the maintenance software. (32-channel interfaces send a YELLOW alarm to the far end). After the maintenance software receives a MAJOR-ALARM message, the Major Alarm Inquiry Test is initiated to confirm the Major alarm on the UDS1 Interface circuit pack. The Inquiry Test will be run every 10 minutes until the Major alarm is cleared. The maintenance software places all trunks or ports on the circuit pack in the out-of-service state if the Major alarm persists for more than 20 minutes.

When the Major alarm is cleared, the maintenance software restores all trunks or ports on the circuit pack to their previous service state before a Major alarm occurs

Table 9-412. TEST #142 Major Alarm Inquiry Test

Error Code	Test Result	Description/ Recommendation
	ABORT	Internal System Error
2000	ABORT	Response to the test request was not received within the allowable time period. If Error Type 1538 is present in the Error Log, follow the maintenance strategy recommended for this error type.
2100	ABORT	Could not allocate the necessary system resources to run this test. 1. Retry the command at 1-minute intervals for a maximum of 5 times. 2. If the test continues to abort, escalate the problem.

Continued on next page

Table 9-412. TEST #142 Major Alarm Inquiry Test — *Continued*

Error Code	Test Result	Description/ Recommendation
	FAIL	The UDS1 Interface circuit pack detects a Major alarm. The DS1 bit error rate is greater than 1/1000. If the UDS1 connects to a T1 network facility: 1. The performance of DS1 link between the UDS1 Interface circuit pack and remote DS1 endpoint is very poor. Enter the **list measurement ds1-log UUCSS** command to read the error seconds measurement. 2. Verify that both endpoints of the DS1 link are administered using the same signaling mode, framing mode, and line coding. 3. Check the physical connectivity of DS1 Interface circuit packs and cable. 4. Replace the local UDS1 Interface circuit pack and repeat the test. 5. Contact T1 Network Service to diagnose the remote DS1 endpoint. 6. If the test still fails, then escalate the problem in

Continued on next page

Table 9-412. TEST #142 Major Alarm Inquiry Test — *Continued*

Error Code	Test Result	Description/ Recommendation
	FAIL	If the UDS1 connects to a line-side terminating device such as a PRI terminal adapter: 1. The performance of DS1 link between the UDS1 Interface circuit pack and the line-side terminating device is very poor. Enter the **list measurement ds1-log UUCSS** command to read the error seconds measurement. 2. Verify that the switch DS1 and the line-side terminating device are administered using the same signaling mode, framing mode, and line coding. 3. Investigate the maintenance status of the line-side terminating device. Obtain the error seconds measurement on the terminating device (if possible). Refer to the line-side terminating device operating manual for information. 4. Check the physical connection of the UDS1 Interface circuit pack to the terminating device. Check premise distribution system (or intra-premise wiring) for physical connection failures. If the error seconds measurement is severe, investigate premise distribution system wiring for noise and distance limitation. 5. Contact the vendor of the line-side terminating device to diagnose the equipment. 6. Replace the local UDS1 Interface circuit pack and repeat the test. 7. If the test still fails, then escalate the problem.
	PASS	No Major alarm is detected in the UDS1 Interface circuit pack.
0	NO BOARD	The UDS1 Interface circuit pack is not administered. 1. Administer the UDS1 Interface circuit pack by issuing the **add ds1 UUCSS** command. 2. Run the test again. 3. If the test continues to return NO BOARD, escalate the problem.

Minor Alarm Inquiry Test (#143)

The Minor alarm raised by a UDS1 Interface circuit pack indicates that the average bit error rate on the DS1 facility is greater than 1/1,000,000, but less than 1/1000. The Minor Alarm Inquiry Test is used to determine that the received DS1 bit error rate is greater than 1/1,000,000 and less than 1/1000. When D4 framing mode is selected, the UDS1 Interface circuit pack takes 41 minutes to recognize and report a Minor alarm and 41 minutes to recognize and report that a Minor alarm condition has cleared. If ESF framing mode is selected, the UDS1 Interface circuit pack takes 10 minutes to recognize and report a Minor alarm and 10 minutes to recognize and report that a Minor alarm condition has cleared.

When the UDS1 Interface circuit pack detects a Minor alarm condition, it will send a MINOR-ALARM message to the maintenance software. After the maintenance software receives a MINOR-ALARM message, the Minor Alarm Inquiry Test is initiated to confirm the Minor alarm. All trunks or ports on the circuit pack are kept in the in-service state after the Minor alarm is confirmed. The Minor Alarm Inquiry Test is run every 10 minutes until the Minor alarm is cleared

Table 9-413. TEST #143 Minor Alarm Inquiry Test

Error Code	Test Result	Description/ Recommendation
	ABORT	Internal System Error
2000	ABORT	Response to the test request was not received within the allowable time period. If Error Type 1538 is present in the Error Log, follow the maintenance strategy recommended for this error type.
2100	ABORT	Could not allocate the necessary system resources to run this test. 1. Retry the command at 1-minute intervals for a maximum of 5 times. 2. If the test continues to abort, escalate the problem.

Continued on next page

Table 9-413. TEST #143 Minor Alarm Inquiry Test — *Continued*

Error Code	Test Result	Description/ Recommendation
	FAIL	The UDS1 Interface circuit pack detects a Minor alarm. The DS1 bit error rate is greater than 1/1,000,000 and less than 1/1000. If the UDS1 connects to a T1 network facility: 1. The performance of the DS1 link between the UDS1 Interface circuit pack and the remote DS1 endpoint is poor. Enter the **list measurement ds1-log UUCSS** command to read the error seconds measurements. 2. Verify that both endpoints of the DS1 link are administered using the same signaling mode, framing mode, and line coding. 3. Check the physical connectivity of DS1 Interface circuit packs and cable. 4. Replace the local UDS1 Interface circuit pack and repeat the test. 5. Contact T1 Network Service to diagnose the remote DS1 endpoint.

Continued on next page

Table 9-413. TEST #143 Minor Alarm Inquiry Test — *Continued*

Error Code	Test Result	Description/ Recommendation
	FAIL *(cont'd.)*	If the test still fails, then escalate the problem. If the UDS1 connects to a line-side terminating device such as a PRI terminal adapter: 1. The performance of DS1 link between the UDS1 Interface circuit pack and the line-side terminating device is very poor. Enter the **list measurement ds1-log UUCSS** command to read the error seconds measurement. 2. Verify that the switch DS1 and the line-side terminating device are administered using the same signaling mode, framing mode, and line coding. 3. Investigate the maintenance status of the line-side terminating device. Obtain the error seconds measurement on the terminating device (if possible). Refer to the line-side terminating device operating manual for information. 4. Check the physical connection of the UDS1 Interface circuit pack to the terminating device. Check premise distribution system (or intra-premise wiring) for physical connection failures. If the error seconds measurement is severe, investigate premise distribution system wiring for noise and distance limitation. 5. Contact the vendor of the line-side terminating device to diagnose the equipment. 6. If the test still fails, then escalate the problem.
	PASS	No Minor alarm is detected in the UDS1 Interface circuit pack.
0	NO BOARD	The UDS1 Interface circuit pack is not administered. 1. Administer the UDS1 Interface circuit pack by issuing the **add ds1 UUCSS** command. 2. Run the test again. 3. If the test continues to return NO BOARD, escalate the problem.

Slip Alarm Inquiry Test (#144)

Slips occur when transmitter and receiver are not running at precisely the same clock rate. The UDS1 Interface circuit pack can detect both positive and negative slips on the DS1 facility. The Slip Alarm Inquiry Test is used to acquire the total number of slips that have occurred on a DS1 link.

When the UDS1 Interface circuit pack detects a slip condition, the circuit pack will increase the on-board slip counter by 1. A SLIP-COUNT message is spontaneously sent to the system software after the counter reaches a threshold (for example, 88). When the maintenance software receives the SLIP-COUNT message, the Slip Alarm Inquiry Test is initiated to query the slip counters on a UDS1 Interface circuit pack and total the slip counts in the maintenance software.

If the count of slips is over the threshold, a Minor alarm is raised against the UDS1 Interface circuit pack. All trunks or ports of the UDS1 Interface circuit pack remain in the in-service state. If the UDS1 Interface circuit pack is used to supply the system synchronization source, the MINOR alarm will initiate a synchronization source switch. See TDM-BUS (TDM Bus) and SYNC (Synchronization) Maintenance documentation for details

Table 9-414. TEST #144 Slip Alarm Inquiry Test

Error Code	Test Result	Description/ Recommendation
	ABORT	Internal System Error
2000	ABORT	Response to the test request was not received within the allowable time period. If Error Type 1538 is present in the Error Log, follow the maintenance strategy recommended for this error type.
2100	ABORT	Could not allocate the necessary system resources to run this test. 1. Retry the command at 1-minute intervals for a maximum of 5 times. 2. If the test continues to abort, escalate the problem.

Continued on next page

Table 9-414. TEST #144 Slip Alarm Inquiry Test — *Continued*

Error Code	Test Result	Description/ Recommendation
1 to 88	FAIL	The UDS1 circuit pack detects a Slip Alarm, indicating that is and the remote DS1 endpoint are not synchronized to the same clock rate. The error code equals the number of slips detected since the last Slip Alarm Inquiry Test. If the UDS1 connects to a T1 network facility: 1. Retry the command at 1-minute intervals up to 5 times. 2. Enter the **list measurement ds1-log UUCSS** command to read the error seconds measurement. 3. Verify that both endpoints of the DS1 link are administered using the same signaling mode, framing mode, and line coding. 4. Check the physical connectivity of DS1 Interface circuit packs and cable. 5. Replace the local UDS1 Interface circuit pack and repeat the test. 6. Contact T1 Network Service to diagnose the remote DS1 endpoint. 7. If the test still fails, then escalate the problem.in

Continued on next page

Table 9-414. TEST #144 Slip Alarm Inquiry Test — *Continued*

Error Code	Test Result	Description/ Recommendation
1 to 88 *(cont'd.)*	FAIL	If the UDS1 connects to a line-side terminating device such as a PRI terminal adapter: 1. Retry the command at 1-minute intervals up to 5 times. 2. Enter the **list measurement ds1-log UUCSS** command to read the error seconds measurement. 3. Verify that the switch DS1 and the line-side terminating device are administered using the same signaling mode, framing mode, and line coding. 4. Investigate the maintenance status of the line-side terminating device. Obtain the error seconds measurement on the terminating device (if possible). Refer to the line-side terminating device operating manual for information. 5. Check the active alarm and hardware error log for recent alarms and errors against synchronization (SYNC). Follow suggested repair procedure. 6. Check the physical connection of the UDS1 Interface circuit pack to the terminating device. Check premise distribution system (or intra-premise wiring) for physical connection failures. If the error seconds measurement is severe, investigate premise distribution system wiring for noise and distance limitation. 7. Contact the vendor of the line-side terminating device to diagnose the equipment. 8. If the test still fails, then escalate the problem.
	PASS	No Slip alarm is detected on the UDS1 Interface circuit pack.
0	NO BOARD	The UDS1 Interface circuit pack is not administered. 1. Administer the UDS1 Interface circuit pack by issuing the **add ds1 UUCSS** command. 2. Run the test again. 3. If the test continues to return NO BOARD, escalate the problem.

Misframe Alarm Inquiry Test (#145)

Misframe Alarm indicates that framing bits observed on a UDS1 Interface circuit pack are in error. The Misframe Alarm Inquiry Test queries the total number of misframes that have occurred on a DS1 Interface circuit pack since the last inquiry.

When the DS1 Interface circuit pack detects a misframe error, it will increase its misframe counter by 1. If the counter reaches a specified threshold (i.e.- 17), a MISFRAME-COUNT message is automatically sent to the switch maintenance software. After the maintenance software receives the MISFRAME-COUNT message, the Misframe Alarm Inquiry Test is initiated to collect the misframe counts from the UDS1 Interface circuit pack.

When the threshold of misframes is reached, if the UDS1 Interface circuit pack is supplying the system synchronization source, then a switching synchronization source message is sent to the TDM Bus Clock. See TDM-BUS (TDM Bus) Maintenance documentation for details. A Minor alarm against the UDS1 Interface circuit pack is raised, but all trunks or ports of the UDS1 Interface circuit pack remain in the in-service state

Table 9-415. TEST #145 Misframe Alarm Inquiry Test

Error Code	Test Result	Description/ Recommendation
	ABORT	Internal System Error
2000	ABORT	Response to the test request was not received within the allowable time period. If Error Type 1538 is present in the Error Log, follow the maintenance strategy recommended for this error type.
2100	ABORT	Could not allocate the necessary system resources to run this test. 1. Retry the command at 1-minute intervals for a maximum of 5 times. 2. If the test continues to abort, escalate the problem.

Continued on next page

Table 9-415. TEST #145 Misframe Alarm Inquiry Test — *Continued*

Error Code	Test Result	Description/ Recommendation
1 to 17	FAIL	The UDS1 Interface circuit pack detects errors in the received framing bits pattern. The error code equals the number of misframes detected by the UDS1 Interface circuit pack since the last Misframe Alarm Inquiry. If the UDS1 connects to a T1 network facility: 1. Retry the command at 1-minute intervals a maximum of 5 times. 2. Enter the **list measurement ds1-log UUCSS** command and check the error seconds measurement. 3. Verify that both endpoints of the DS1 link are administered using the same signaling mode, framing mode, and line coding. 4. Check the physical connectivity of DS1 Interface circuit packs and cable. 5. Replace the local UDS1 Interface circuit pack and repeat the test. 6. Contact T1 Network Service to diagnose the remote DS1 endpoint. 7. If the test still fails, then escalate the problem.

Continued on next page

Table 9-415. TEST #145 Misframe Alarm Inquiry Test — *Continued*

Error Code	Test Result	Description/ Recommendation
1 to 17	FAIL *(cont'd.)*	If the UDS1 connects to a line-side terminating device such as a PRI terminal adapter: 1. Retry the command at 1-minute intervals a maximum of 5 times. 2. Enter the **list measurement ds1-log UUCSS** command to read the error seconds measurement. 3. Verify that the switch DS1 and the line-side terminating device are administered using the same signaling mode, framing mode, and line coding. 4. Investigate the maintenance status of the line-side terminating device. Obtain the error seconds measurement on the terminating device (if possible). Refer to the line-side terminating device operating manual for information. 5. Check the physical connection of the UDS1 Interface circuit pack to the terminating device. Check premise distribution system (or intra-premise wiring) for physical connection failures. If the error seconds measurement is severe, investigate premise distribution system wiring for noise and distance limitation. 6. Contact the vendor of the line-side terminating device to diagnose the equipment. 7. If the test still fails, then escalate the problem.
	PASS	No Misframe alarm is detected on the UDS1 Interface circuit pack.
0	NO BOARD	The UDS1 Interface circuit pack is not administered. 1. Administer the UDS1 Interface circuit pack by issuing the **add ds1 UUCSS** command. 2. Run the test again. 3. If the test continues to return NO BOARD, escalate the problem.

Translation Update Test (#146)

The Translation Update Test sends the circuit-pack-level information specified by System Administration to the UDS1 Interface circuit pack. Translation includes the following data administered for a UDS1 Interface circuit pack (see output of **display ds1 UUCSS** command): DS1 Link Length between two DS1 endpoints, Synchronization Source Control, All Zero Suppression, Framing Mode, Signaling Mode, Time Slot Number of 697-Hz Tone, Time Slot Number of 700-Hz Tone, etc.

In G3V3, if a TN464F or later UDS1 circuit pack is combined with an AT&T 120A1 CSU Module to form and Integrated CSU Module, this test will also send the administration for this Integrated CSU to the circuit pack to assure the board's translations are correct. The administration of the CSU Module is done using the DS1 circuit pack administration form. Translation for the CSU Module includes the following data: Transmit LBO, Receive ALBO, Supply CPE Loopback Jack Power etc.

Table 9-416. TEST #146 Translation Update Test

Error Code	Test Result	Description/ Recommendation
	ABORT	Internal System Error 1. Retry the command at 1-minute interval s a maximum of 5 times. 2. If the test continues to abort, escalate the problem.
	FAIL	Internal system software error. 1. Enter the **display ds1 UUCSS** command to verify the UDS1 Interface circuit pack translation. 2. If the test continues to fail, escalate the problem.
	PASS	Translation data has been downloaded to the UDS1 Interface circuit pack successfully.
0	NO BOARD	The UDS1 Interface circuit pack is not administered. 1. Administer the UDS1 Interface circuit pack by issuing the **add ds1 UUCSS** command. 2. Run the test again. 3. If the test continues to return NO BOARD, escalate the problem.

DS1 Board Loopback Test (#1209)

This test is destructive.

The DS1 Board Loopback (BLB) Test causes a loopback at the TN464F DS1 board edge and tests DS1 board internal circuitry.

The test is destructive and can only be initiated by a system technician demanded *test ds1-loop UUCSS ds1/csu-loopback-tests* command.

All trunks or ports on the UDS1 Interface circuit pack must be busied out via the system technician **busyout board** command before running the BLB Test.

When the BLB Test is initiated, maintenance software sends an appropriate message to the TN464F UDS1 Interface circuit pack to start the test. The board will set up the BLB loopback, transmit a test pattern, and verify that the pattern is received unaltered through the loopback. If the transmitted and received pattern is different, the test fails.

When the test is complete, all trunks or ports on the TN464F UDS1 Interface circuit pack are restored to the in-service state after the **release board** command is entered

Table 9-417. TEST #1209 DS1 Board Loopback Test

Error Code	Test Result	Description/ Recommendation
	ABORT	Internal System Error 1. Retry the *test ds1-loop UUCSS ds1/csu-loopback-tests* command at 1-minute intervals a maximum of 5 times. 2. If the test continues to abort, escalate the problem.
1005	ABORT	DS1 Board Loopback Test cannot be executed in the current configuration. To run this, the TN464F or later suffix UDS1 must be administered for 24-channel operation. The "Bit Rate" field on the DS1 circuit pack administration form must be set to "1.544" for 24-channel operation.

Continued on next page

Table 9-417. TEST #1209 DS1 Board Loopback Test — *Continued*

Error Code	Test Result	Description/ Recommendation
1015	ABORT	Ports on the UDS1 Interface circuit pack have not been busied out to out-of-service. 1. Enter the **busyout board UUCSS** command to put all trunks or ports of the UDS1 Interface circuit pack into the out-of-service state. 2. Retry the command. 3. If the test continues to abort, escalate the problem.
1039	ABORT	The UDS1 Interface circuit pack is providing timing for the system. Executing this test could cause major system disruption. If the UDS1 Interface circuit pack needs to be tested, set the synchronization reference to another DS1 Interface circuit pack or to the Tone-Clock circuit pack via the following command sequence: 1. Issue the **disable synchronization-switch** command. 2. Next, issue the **set synchronization UUCSS** command. 3. Lastly, issue the **enable synchronization-switch** command.
1950	ABORT	Another loopback/span test is already executing on the DS1 board or the board is in a network requested loopback mode (Line loopback or Payload loopback). The hardware error log will indicate whether a Customer Loopback Jack Test, Far CSU Loopback Test, or the One-Way Span Test is executing or if the board is in line loopback or payload loopback mode. Only one long-duration loopback/span test can be active at a given time. Thus, if a loopback/span test is already active, that test must be terminated via the *test ds1-loop UUCSS end-loopback/span-test* command in order to execute this test.
2000	ABORT	Response to the test request was not received within the allowable time period. If Error Type 1538 is present in the Error Log, follow the maintenance strategy recommended for this error type.

Continued on next page

Table 9-417. TEST #1209 DS1 Board Loopback Test — *Continued*

Error Code	Test Result	Description/ Recommendation
2100	ABORT	Could not allocate the necessary system resources to run this test. 1. Retry the command at 1-minute intervals for a maximum of 5 times. 2. If the test continues to abort, escalate the problem.
	FAIL	UDS1 Interface circuit pack failed the DS1 Board Loopback Test. 1. Retry the *test ds1-loop UUCSS ds1/csu-loopback-tests* command. 2. If the BLB test continues to fail, then replace the UDS1 circuit pack.
	PASS	The BLB test executed successfully. The test pattern was transmitted and received successfully up to the TN464F DS1 board edge.
0	NO BOARD	The UDS1 Interface circuit pack is not administered. 1. Administer the UDS1 Interface circuit pack by issuing the **add ds1 UUCSS** command. 2. Run the test again. 3. If the test continues to return NO BOARD, escalate the problem.

CSU Equipment Loopback Test (#1210)

This test is destructive.

The CSU Equipment Loopback (ELB) Test causes a loopback at the near-edge of the local AT&T 120A1 CSU Module and tests the connection from the TN464F DS1 board to the CSU Module (DS1 board edge interconnecting cable, and CSU Module edge). This test will only be performed if the AT&T 120A1 CSU Module is present, administered, and connected to a 1.544 Mbps TN464F DS1 circuit pack on the back of the port carrier.

The test is destructive and can only be initiated by a system technician demanded *test ds1-loop UUCSS ds1/csu-loopback-tests* command.

All trunks or ports on the UDS1 Interface circuit pack must be busied out via the system technician **busyout board** command before running the ELB Test.

When the ELB Test is initiated, maintenance software sends an appropriate message to the TN464F UDS1 Interface circuit pack to start the test. The board will set up the ELB loopback, transmit a test pattern, and verify that the pattern is received unaltered through the loopback. If the transmitted and received pattern is different, the test fails.

When the test is complete, all trunks or ports on the TN464F UDS1 Interface circuit pack are restored to the in-service state after the **release board** command is entered

Table 9-418. TEST #1210 CSU Equipment Loopback Test

Error Code	Test Result	Description/ Recommendation
	ABORT	Internal System Error 1. Retry the *test ds1-loop UUCSS ds1/csu-loopback-tests* command at 1-minute intervals a maximum of 5 times. 2. If the test continues to abort, escalate the problem.
1005	ABORT	CSU Equipment Loopback Test cannot be executed in the current configuration. To run this test, the *Near-End CSU Type* field on the DS1circuit pack administration form must be set to *integrated* and the "Bit Rate" field on the DS1 circuit pack administration form must be set to "1.544" (24-channel configuration). 1. Use the **change ds1 UUCSS** command to set the *Near-End CSU Type* field on the DS1 circuit pack administration form to *integrated*, and/or change the "Bit Rate" field to "1.544" if the board is to be used in 24-channel configuration. 2. Retry the ***test ds1-loop UUCSS ds1/csu-loopback-tests*** command. 3. If the test continues to abort, escalate the problem.
1015	ABORT	Ports on the UDS1 Interface circuit pack have not been busied out to out-of-service. 1. Enter the **busyout board UUCSS** command to put all trunks or ports of the UDS1 Interface circuit pack into the out-of-service state. 2. Retry the command. 3. If the test continues to abort, escalate the problem.

Continued on next page

Table 9-418. TEST #1210 CSU Equipment Loopback Test — *Continued*

Error Code	Test Result	Description/ Recommendation
1039	ABORT	The UDS1 Interface circuit pack is providing timing for the system. Executing this test could cause major system disruption. If the UDS1 Interface circuit pack needs to be tested, set the synchronization reference to another DS1 Interface circuit pack or to the Tone-Clock circuit pack via the following command sequence: 1. Issue the **disable synchronization-switch** command. 2. Next, issue the **set synchronization UUCSS** command. 3. Lastly, issue the **enable synchronization-switch** command.
1950	ABORT	Another loopback/span test is already executing on the DS1 board or the board is in a network requested loopback mode (Line loopback or Payload loopback). The hardware error log will indicate whether a Customer Loopback Jack Test, Far CSU Loopback Test, or the One-Way Span Test is executing or if the board is in line loopback or payload loopback mode. Only one long-duration loopback/span test can be active at a given time. Thus, if a loopback/span test is already active, that test must be terminated via the *test ds1-loop UUCSS end-loopback/span-test* command in order to execute this test.
1951	ABORT	The CSU Equipment Loopback Test could not be executed because the 120A1 CSU Module was not physically installed. Physically connect the 120A1 CSU Module to the TN464F board on the back of the port carrier.

Continued on next page

Table 9-418. TEST #1210 CSU Equipment Loopback Test — *Continued*

Error Code	Test Result	Description/ Recommendation
2000	ABORT	Response to the test request was not received within the allowable time period. If Error Type 1538 is present in the Error Log, follow the maintenance strategy recommended for this error type.
2100	ABORT	Could not allocate the necessary system resources to run this test. 1. Retry the command at 1-minute intervals for a maximum of 5 times. 2. If the test continues to abort, escalate the problem.
	FAIL	UDS1 Interface circuit pack failed the CSU Equipment Loopback Test. 1. Retry the *test ds1-loop UUCSS ds1/csu-loopback-tests* command. 2. If the ELB test continues to fail, then either the TN464F board, the CSU Module, or the I/O cable between the backplane and the CSU module (or any combination thereof) has failed. Attempt to isolate the problem to one of these areas. Begin by replacing the CSU Module and running the *test ds1-loop UUCSS ds1/csu-loopback-tests* command again. 3. If the ELB test continues to fail, then replace the TN464F board and run the *test ds1-loop UUCSS ds1/csu-loopback-tests* command again. 4. If the ELB test continues to fail, the problem could be in the I/O cable between the backplane and the CSU module.

Continued on next page

Table 9-418. TEST #1210 CSU Equipment Loopback Test — *Continued*

Error Code	Test Result	Description/ Recommendation
	PASS	The ELB test executed successfully. The test pattern was transmitted and received successfully over the connection from the TN464F DS1 board to the near-edge of the 120A1 CSU Module.
0	NO BOARD	The UDS1 Interface circuit pack is not administered. 1. Administer the UDS1 Interface circuit pack by issuing the **add ds1 UUCSS** command. 2. Run the test again. 3. If the test continues to return NO BOARD, escalate the problem.

CSU Repeater Loopback Test (#1211)

This test is destructive.

The CSU Repeater Loopback (RLB) Test causes a loopback at the far-edge of the local AT&T 120A1 CSU Module and tests the connection from the TN464F DS1 board to and including the CSU Module circuitry. This test will only be performed if the AT&T 120A1 CSU Module is present, administered, and connected to a 1.544 Mbps TN464F DS1 circuit pack on the back of the port carrier.

The test is destructive and can only be initiated by a system technician demanded *test ds1-loop UUCSS ds1/csu-loopback-tests* command.

All trunks or ports on the UDS1 Interface circuit pack must be busied out via the system technician **busyout board** command before running the RLB Test.

When the RLB Test is initiated, maintenance software sends an appropriate message to the TN464F UDS1 Interface circuit pack to start the test. The board will set up the RLB loopback, transmit a test pattern, and verify that the pattern is received unaltered through the loopback. If the transmitted and received pattern is different, the test fails.

When the test is complete, all trunks or ports on the TN464F UDS1 Interface circuit pack are restored to the in-service state after the **release board** command is entered

Table 9-419. TEST #1211 CSU Repeater Loopback Test

Error Code	Test Result	Description/ Recommendation
	ABORT	Internal System Error 1. Retry the *test ds1-loop UUCSS ds1/csu-loopback-tests* command at 1-minute intervals a maximum of 5 times. 2. If the test continues to abort, escalate the problem.
1005	ABORT	CSU Repeater Loopback Test cannot be executed in the current configuration. To run this test, the *Near-End CSU Type* field on the DS1circuit pack administration form must be set to *integrated* and the "Bit Rate" field on the DS1 circuit pack administration form must be set to "1.544" (24-channel configuration). 1. Use the **change ds1 UUCSS** command to set the *Near-End CSU Type* field on the DS1 circuit pack administration form to *integrated*, and/or change the "Bit Rate" field to "1.544" if the board is to be used in 24-channel configuration. 2. Retry the *test ds1-loop UUCSS ds1/csu-loopback-tests* command. 3. If the test continues to abort, escalate the problem.
1015	ABORT	Ports on the UDS1 Interface circuit pack have not been busied out to out-of-service. 1. Enter the **busyout board UUCSS** command to put all trunks or ports of the UDS1 Interface circuit pack into the out-of-service state. 2. Retry the command. 3. If the test continues to abort, escalate the problem.

Continued on next page

Table 9-419. TEST #1211 CSU Repeater Loopback Test — *Continued*

Error Code	Test Result	Description/ Recommendation
1039	ABORT	The UDS1 Interface circuit pack is providing timing for the system. Executing this test could cause major system disruption. If the UDS1 Interface circuit pack needs to be tested, set the synchronization reference to another DS1 Interface circuit pack or to the Tone-Clock circuit pack via the following command sequence: 1. Issue the **disable synchronization-switch** command. 2. Next, issue the **set synchronization UUCSS** command. 3. Lastly, issue the **enable synchronization-switch** command.
1950	ABORT	Another loopback/span test is already executing on the DS1 board or the board is in a network requested loopback mode (Line loopback or Payload loopback). The hardware error log will indicate whether a Customer Loopback Jack Test, Far CSU Loopback Test, or the One-Way Span Test is executing or if the board is in line loopback or payload loopback mode. Only one long-duration loopback/span tests can be active at a given time. Thus, if a loopback/span test is already active, that test must be terminated via the *test ds1-loop UUCSS end-loopback/span-test* command in order to execute this test.
1951	ABORT	The CSU Repeater Loopback Test could not be executed because the 120A1 CSU Module was not physically installed. Physically connect the 120A1 CSU Module to the TN464F board on the back of the port carrier.

Continued on next page

Table 9-419. TEST #1211 CSU Repeater Loopback Test — *Continued*

Error Code	Test Result	Description/ Recommendation
2000	ABORT	Response to the test request was not received within the allowable time period. If Error Type 1538 is present in the Error Log, follow the maintenance strategy recommended for this error type.
2100	ABORT	Could not allocate the necessary system resources to run this test. 1. Retry the command at 1-minute intervals for a maximum of 5 times. 2. If the test continues to abort, escalate the problem.
	FAIL	UDS1 Interface circuit pack failed the CSU Repeater Loopback Test. 1. Retry the *test ds1-loop UUCSS ds1/csu-loopback-tests* command. 2. If the RLB test continues to fail, and the CSU Equipment Loopback Test (#1210) passed, then replace the CSU Module.
	PASS	The RLB test executed successfully. The test pattern was transmitted and received successfully over the connection from the TN464F DS1 board to the far-edge of the 120A1 CSU Module.
0	NO BOARD	The UDS1 Interface circuit pack is not administered. 1. Administer the UDS1 Interface circuit pack by issuing the **add ds1 UUCSS** command. 2. Run the test again. 3. If the test continues to return NO BOARD, escalate the problem.

CPE Loopback Jack Test (#1212)

This test is destructive.

The CPE Loopback Jack (CLJ-LB) Test causes a loopback at the CPE Loopback Jack and tests the building wiring connection between the TN464F DS1 board and the CPE Loopback Jack.

The test is highly destructive and can only be initiated by a system technician demanded ***test ds1-loop UUCSS cpe-loopback-jack-test-begin [number-of-bits bit-pattern]*** command. The System technician has the choice of entering a loopback activation code on the command line or using the default code *0x47F*.

All trunks or ports on the UDS1 Interface circuit pack must be busied out via the system technician **busyout board** command before running the CPE Loopback Jack Test.

The CPE Loopback Jack Test has the TN464F UDS1 Interface circuit pack transmit a loopback activation code to the CPE Loopback Jack, waits up to 10 seconds for return of the code to verify the loopback has been established, transmits a framed 3-in-24 test pattern, begins counting bit errors in the received test pattern, and returns a PASS result to indicate that the pattern was successfully sent. If the loopback is not established within the 10 seconds, the test returns FAIL or abort.

The status of the CPE Loopback Jack test will be available in the hardware error log via error type 3900. Several distinct aux values will be used to give the user information of the status of the test.

The *list measurements ds1 summary* command will display the length of time the test has been running (*Test Duration* field) and number of bit errors detected (*Loopback/Span Test Bit-Error Count* field). If the test pattern is being passed through the loopback cleanly, the number of bit errors should be very low. The command will also display the type of Loopback/Span test executing (*Test* field), the type of pattern generated for the Loopback/Span test (*Pattern* field), and whether the pattern (*i.e. 3-in-24 Pattern*) is synchronized (*Synchronized* field).

To terminate the test, enter the *test ds1-loop UUCSS end-loopback/span-test* command or the **release board** command. Using the **release board** command will restore all trunks or ports on the TN464F UDS1 Interface circuit pack to the in-service state

Table 9-420. TEST #1212 CPE Loopback Jack Test

Error Code	Test Result	Description/ Recommendation
	ABORT	Internal System Error 1. Retry the *test ds1-loop UUCSS cpe-loopback-jack-test-begin* command at 1-minute intervals a maximum of 5 times. 2. If the test continues to abort, escalate the problem.
1005	ABORT	CPE Loopback Jack Test cannot be executed in the current configuration. To run this test, the TN464F or later suffix UDS1 must be administered for 24-channel operation. The "Bit Rate" field on the DS1 circuit pack administration form must be set to "1.544" for 24-channel operation.
1015	ABORT	Ports on the UDS1 Interface circuit pack have not been busied out to out-of-service. 1. Enter the **busyout board UUCSS** command to put all trunks or ports of the UDS1 Interface circuit pack into the out-of-service state. 2. Retry the command. 3. If the test continues to abort, escalate the problem.
1039	ABORT	The UDS1 Interface circuit pack is providing timing for the system. Executing this test could cause major system disruption. If the UDS1 Interface circuit pack needs to be tested, set the synchronization reference to another DS1 Interface circuit pack or to the Tone-Clock circuit pack via the following command sequence: 1. Issue the **disable synchronization-switch** command. 2. Next, issue the **set synchronization UUCSS** command. 3. Lastly, issue the **enable synchronization-switch** command.

Continued on next page

Table 9-420. TEST #1212 CPE Loopback Jack Test — *Continued*

Error Code	Test Result	Description/ Recommendation
1950	ABORT	Another loopback/span test is already executing on the DS1 board or the board is in a network requested loopback mode (Line loopback or Payload loopback). The hardware error log will indicate whether a Customer Loopback Jack Test, Far CSU Loopback Test, or the One-Way Span Test is executing or if the board is in line loopback or payload loopback mode. Only one long-duration loopback/span test can be active at a given time. Thus, if a loopback/span test is already active, that test must be terminated via the *test ds1-loop UUCSS end-loopback/span-test* command in order to execute this test.
2000	ABORT	Response to the test request was not received within the allowable time period. If Error Type 1538 is present in the Error Log, follow the maintenance strategy recommended for this error type.
2100	ABORT	Could not allocate the necessary system resources to run this test. 1. Retry the command at 1-minute intervals for a maximum of 5 times. 2. If the test continues to abort, escalate the problem.

Continued on next page

Table 9-420. TEST #1212 CPE Loopback Jack Test — *Continued*

Error Code	Test Result	Description/ Recommendation
2	FAIL	The CPE Loopback Jack Test was not set up properly. The UDS1 Interface circuit pack could not successfully put the CPE Loopback Jack into loopback mode.
3	FAIL	The CPE Loopback Jack Test was not set up properly. The framed 3-in-24 test pattern, generated by the UDS1 Interface circuit pack and looped back through the CPE Loopback Jack, could not be detected properly by the UDS1 circuit pack. 1. Retry the *test ds1-loop UUCSS cpe-loopback-jack-test-begin* command. 2. If the CPE Loopback Jack test continues to fail, the problem could be with the TN464F board, the CPE Loopback Jack equipment, or somewhere in between. Run the *test ds1-loop UUCSS ds1/csu-loopback-tests* command to see if the loopback tests closer to the TN464F board are successful. If any of those loopback tests fail, follow the maintenance strategy associated with those loopbacks. Otherwise, escalate the problem.
	PASS	The CPE Loopback Jack test has successfully began executing. The test will continue to run until the system technician enters the *test ds1-loop UUCSS end-loopback/span-test* command or the *release board UUCSS* command.
0	NO BOARD	The UDS1 Interface circuit pack is not administered. 1. Administer the UDS1 Interface circuit pack by issuing the **add ds1 UUCSS** command. 2. Run the test again. 3. If the test continues to return NO BOARD, escalate the problem.

Far CSU Loopback Test (#1213)

This test is destructive.

The Far CSU Loopback (R-LLB) Test causes a loopback at the far-end CSU and tests all circuitry and facilities from the local TN464F DS1 board to the far-end CSU.

The test is destructive and can only be initiated by a system technician demanded *test ds1-loop UUCSS far-csu-loopback-test-begin* command.

All trunks or ports on the UDS1 Interface circuit pack must be busied out via the system technician **busyout board** command before running the Far CSU Loopback Test.

If the far-end CSU is not an AT&T 120A1 CSU Module, and the DS1 is administered for ami-zcs line coding, one's density protection must be disabled on the CSU during the test due to the large number of zero's in the 3-in-24 test pattern.

The Far CSU Loopback Test has the TN464F UDS1 Interface circuit pack transmit a loopback activation code to the remote CSU, waits up to 15 seconds for return of the code to verify the loopback has been established, transmits a framed 3-in-24 test pattern, begins counting bit errors in the received test pattern, and returns a PASS result. If the loopback is not established within the 15 seconds, the test fails.

The status of the Far CSU Loopback test will be available in the hardware error log via error type 3901. Several distinct aux values will be used to give the user information of the status of the test.

The *list measurements ds1 summary* command will display the length of time the test has been running (*Test Duration* field) and number of bit errors detected (*Loopback/Span Test Bit-Error Count* field). If the test pattern is being passed through the loopback cleanly, the number of bit errors should be very low. The command will also display the type of Loopback/Span test executing (*Test* field), the type of pattern generated for the type of Loopback/Span test (*Pattern* field), and whether the pattern (*i.e. 3-in-24 Pattern*) is synchronized (*Synchronized* field).

To terminate the test, enter the *test ds1-loop UUCSS end-loopback/span-test* command or the **release board** command. Using the **release board** command will restore all trunks or ports on the TN464F UDS1 Interface circuit pack to the in-service state.

Table 9-421. TEST #1213 Far CSU Loopback Test

Error Code	Test Result	Description/ Recommendation
	ABORT	Internal System Error 1. Retry the *test ds1-loop UUCSS far-csu-loopback-test-begin* command at 1-minute intervals a maximum of 5 times. 2. If the test continues to abort, escalate the problem.
1005	ABORT	Far CSU Loopback Test cannot be executed in the current configuration. To run this, the TN464F or later suffix UDS1 must be administered for 24-channel operation. The "Bit Rate" field on the DS1 circuit pack administration form must be set to "1.544" for 24-channel operation.
1015	ABORT	Ports on the UDS1 Interface circuit pack have not been busied out to out-of-service. 1. Enter the **busyout board UUCSS** command to put all trunks or ports of the UDS1 Interface circuit pack into the out-of-service state. 2. Retry the command. 3. If the test continues to abort, escalate the problem.
1039	ABORT	The UDS1 Interface circuit pack is providing timing for the system. Executing this test could cause major system disruption. If the UDS1 Interface circuit pack needs to be tested, set the synchronization reference to another DS1 Interface circuit pack or to the Tone-Clock circuit pack via the following command sequence: 1. Issue the **disable synchronization-switch** command. 2. Next, issue the **set synchronization UUCSS** command. 3. Lastly, issue the **enable synchronization-switch** command.

Continued on next page

Table 9-421. TEST #1213 Far CSU Loopback Test — *Continued*

Error Code	Test Result	Description/ Recommendation
1950	ABORT	Another loopback/span test is already executing on the DS1 board or the board is in a network requested loopback mode (Line loopback or Payload loopback). The hardware error log will indicate whether a Customer Loopback Jack Test, Far CSU Loopback Test, or the One-Way Span Test is executing or if the board is in line loopback or payload loopback mode. Only one long-duration loopback/span test can be active at a given time. Thus, if a loopback/span test is already active, that test must be terminated via the *test ds1-loop UUCSS end-loopback/span-test* command in order to execute this test.
2000	ABORT	Response to the test request was not received within the allowable time period. If Error Type 1538 is present in the Error Log, follow the maintenance strategy recommended for this error type.
2100	ABORT	Could not allocate the necessary system resources to run this test. 1. Retry the command at 1-minute intervals for a maximum of 5 times. 2. If the test continues to abort, escalate the problem.
2	FAIL	The Far CSU Loopback Test was not set up properly. The UDS1 Interface circuit pack could not successfully put the far-end CSU into loopback mode.

Continued on next page

Table 9-421. TEST #1213 Far CSU Loopback Test — *Continued*

Error Code	Test Result	Description/ Recommendation
3	FAIL	The Far CSU Loopback Test was not set up properly. The framed 3-in-24 test pattern, generated by the UDS1 Interface circuit pack and looped back through the far-end CSU, could not be detected properly by the UDS1 circuit pack. 1. Retry the *test ds1-loop UUCSS far-csu-loopback-test-begin* command. 2. If the Far CSU Loopback test continues to fail with this error code, the problem could be with the TN464F board, the far-end CSU equipment, or somewhere in between. Run the *test ds1-loop UUCSS cpe-loopback-jack-test-begin* command to see if the CPE Loopback Jack test which is closer to the TN464F board is successful. (If a CPE Loopback Jack device is not being used, then run the *test ds1-loop UUCSS ds1/csu-loopback-tests* command to see if these even closer loopback tests succeed). If the closer loopback test fails, follow the maintenance strategy associated with that loopback. Otherwise, escalate the problem.
	PASS	The Far CSU Loopback test has successfully began executing. The test will continue to run until the system technician enters the *test ds1-loop UUCSS end-loopback/span-test* command or the *release board UUCSS* command.
0	NO BOARD	The UDS1 Interface circuit pack is not administered. 1. Administer the UDS1 Interface circuit pack by issuing the **add ds1 UUCSS** command. 2. Run the test again. 3. If the test continues to return NO BOARD, escalate the problem.

One-Way Span Test (#1214)

This test is destructive.

The One-Way Span Test allows one-way span testing to and from remote test equipment or another DEFINITY communications system. This will test all circuitry and facilities from the local TN464F DS1 board to the remote test equipment or other DEFINITY communications system.

The test is destructive and can only be initiated by a system technician demanded *test ds1-loop UUCSS one-way-span-test-begin* command.

All trunks or ports on the UDS1 Interface circuit pack must be busied out via the system technician **busyout board** command before running the One-Way Span Test.

The One-Way Span Test has the TN464F UDS1 Interface circuit pack transmit a framed 3-in-24 test pattern and attempt to receive and verify the pattern. If the TN464F board receives a framed 3-in-24 test pattern sent from another DEFINITY G3V3 or test equipment at the far-end of the DS1, it will begin counting bit errors within the received pattern.

The status of the One-Way Span test will be available in the hardware error log via error type 3902. Several distinct aux values will be used to give the user information of the status of the test.

The *list measurements ds1 summary* command will display the length of time the test has been running (*Test Duration* field) and number of bit errors detected (*Loopback/Span Test Bit-Error Count* field). If the test pattern is being sent cleanly over the span from the far-end, the number of bit errors should be very low. The *Test Duration* field will show *0* until the test pattern is received from the far-end. Upon receiving the test pattern, the board will begin calculating the test duration and number of bit errors. The command will also display the Loopback/Span test executing (*Test* field), the type of pattern generated for the Loopback/Span test (*Pattern* field), and whether the pattern (*i.e. 3-in-24 Pattern*) is synchronized (*Synchronized* field).

To terminate the test, enter the *test ds1-loop UUCSS end-loopback/span-test* command or the **release board** command. Using the **release board** command will restore all trunks or ports on the TN464F UDS1 Interface circuit pack to the in-service state

Table 9-422. TEST #1214 One-Way Span Test

Error Code	Test Result	Description/ Recommendation
	ABORT	Internal System Error 1. Retry the *test ds1-loop UUCSS one-way-span-test-begin* command at 1-minute intervals a maximum of 5 times. 2. If the test continues to abort, escalate the problem.
1005	ABORT	One-Way Span Test cannot be executed in the current configuration. To run this, the TN464F or later suffix UDS1 must be administered for 24-channel operation. The "Bit Rate" field on the DS1 circuit pack administration form must be set to "1.544" for 24-channel operation.
1015	ABORT	Ports on the UDS1 Interface circuit pack have not been busied out to out-of-service. 1. Enter the **busyout board UUCSS** command to put all trunks or ports of the UDS1 Interface circuit pack into the out-of-service state. 2. Retry the command. 3. If the test continues to abort, escalate the problem.
1039	ABORT	The UDS1 Interface circuit pack is providing timing for the system. Executing this test could cause major system disruption. If the UDS1 Interface circuit pack needs to be tested, set the synchronization reference to another DS1 Interface circuit pack or to the Tone-Clock circuit pack via the following command sequence: 1. Issue the **disable synchronization-switch** command. 2. Next, issue the **set synchronization UUCSS** command. 3. Lastly, issue the **enable synchronization-switch** command.

Continued on next page

Table 9-422. TEST #1214 One-Way Span Test — *Continued*

Error Code	Test Result	Description/ Recommendation
1950	ABORT	Another loopback/span test is already executing on the DS1 board or the board is in a network requested loopback mode (Line loopback or Payload loopback). The hardware error log will indicate whether a Customer Loopback Jack Test, Far CSU Loopback Test, or the One-Way Span Test is executing or if the board is in line loopback or payload loopback mode. Only one long-duration loopback/span test can be active at a given time. Thus, if a loopback/span test is already active, that test must be terminated via the *test ds1-loop UUCSS end-loopback/span-test* command in order to execute this test.
2000	ABORT	Response to the test request was not received within the allowable time period. If Error Type 1538 is present in the Error Log, follow the maintenance strategy recommended for this error type.
2100	ABORT	Could not allocate the necessary system resources to run this test. 1. Retry the command at 1-minute intervals for a maximum of 5 times. 2. If the test continues to abort, escalate the problem.
	PASS	The One-Way Span test has successfully began transmitting a framed 3-in-24 test pattern. The test will continue to run until the system technician enters the *test ds1-loop UUCSS end-loopback/span-test* command or the *release board UUCSS* command.
0	NO BOARD	The UDS1 Interface circuit pack is not administered. 1. Administer the UDS1 Interface circuit pack by issuing the **add ds1 UUCSS** command. 2. Run the test again. 3. If the test continues to return NO BOARD, escalate the problem.

Inject Single Bit Error Test (#1215)

This test is destructive.

The Inject Single Bit Error Test will cause a single bit error to be sent within an active framed 3-in-24 test pattern.

The test is highly destructive and can only be initiated by a system technician demanded *test ds1-loop UUCSS inject-single-bit-error* command. An attempt to use this command will be rejected if none of the three long-duration DS1 loopback/span tests (CPE Loopback Jack Test, Far CSU Loopback Test, One-Way Span Test) are active on a TN464F circuit pack.

All trunks or ports on the UDS1 Interface circuit pack must be busied out via the system technician **busyout board** command before running the Inject Single Bit Error Test.

The *list measurements ds1 summary* command displays the number of bit errors detected (*Loopback/Span Test Bit-Error Count* field). Injecting this single bit error should increment the bit error count of the loopback/span test by one

Table 9-423. TEST #1215 Inject Single Bit Error Test

Error Code	Test Result	Description/ Recommendation
	ABORT	Internal System Error 1. Retry the *test ds1-loop UUCSS inject-single-bit-error* command at 1-minute intervals a maximum of 5 times. 2. If the test continues to abort, escalate the problem.
1015	ABORT	Ports on the UDS1 Interface circuit pack have not been busied out to out-of-service. 1. Enter the **busyout board UUCSS** command to put all trunks or ports of the UDS1 Interface circuit pack into the out-of-service state. 2. Retry the command. 3. If the test continues to abort, escalate the problem.
2000	ABORT	Response to the test request was not received within the allowable time period. If Error Type 1538 is present in the Error Log, follow the maintenance strategy recommended for this error type.

Continued on next page

Table 9-423. TEST #1215 Inject Single Bit Error Test — *Continued*

Error Code	Test Result	Description/ Recommendation
2100	ABORT	Could not allocate the necessary system resources to run this test. 1. Retry the command at 1-minute intervals for a maximum of 5 times. 2. If the test continues to abort, escalate the problem.
	PASS	A single bit error has been successfully injected into an active framed 3-in-24 test pattern.
0	NO BOARD	The UDS1 Interface circuit pack is not administered. 1. Administer the UDS1 Interface circuit pack by issuing the **add ds1 UUCSS** command. 2. Run the test again. 3. If the test continues to return NO BOARD, escalate the problem.

End Loopback/Span Test (#1216)

This test is destructive.

The End Loopback/Span Test will terminate an active loopback or span test on a TN464F UDS1 circuit pack. Bit error counting against the received test pattern stream is terminated and sending of the framed 3-in-24 test pattern is halted. If either the CPE Loopback Jack or the far-end CSU is looped, the appropriate loopback deactivate code is sent. If the loopback could not be deactivated, then the test will FAIL and a MINOR alarm will be noted in the alarm log until the loopback is cleared.

The test is highly destructive and can only be initiated by a system technician demanded *test ds1-loop UUCSS end-loopback/span-test* command. Since only one of these three different long-duration loopback/span tests can be active at a time, the TN464F circuit pack knows which loopback/span test to terminate.

All trunks or ports on the UDS1 Interface circuit pack must be busied out via the system technician **busyout board** command before running this End Loopback/Span Test.

The *list measurements ds1 summary* command will display the length of time the test ran (*Test Duration* field) and number of bit errors detected (*Loopback/Span Test Bit-Error Count* field).

To restore the trunks or ports on the TN464F UDS1 Interface circuit pack to the in-service state, execute the **release board** command

Table 9-424. TEST #1216 End Loopback/Span Test

Error Code	Test Result	Description/ Recommendation
	ABORT	Internal System Error 1. Retry the *test ds1-loop UUCSS end-loopback/span-test* command at 1-minute intervals a maximum of 5 times. 2. If the test continues to abort, escalate the problem.
1005	ABORT	End Loopback/Span Test cannot be executed in the current configuration. To run this test, the TN464F or later suffix DS1 board must be administered for 24-channel operation. The "Bit Rate" field on the DS1 circuit pack administration form must be set to "1.544" for 24-channel operation.

Continued on next page

Table 9-424. TEST #1216 End Loopback/Span Test — *Continued*

Error Code	Test Result	Description/ Recommendation
1015	ABORT	Ports on the UDS1 Interface circuit pack have not been busied out to out-of-service. 1. Enter the **busyout board UUCSS** command to put all trunks or ports of the UDS1 Interface circuit pack into the out-of-service state. 2. Retry the command. 3. If the test continues to abort, escalate the problem.
2000	ABORT	Response to the test request was not received within the allowable time period. If Error Type 1538 is present in the Error Log, follow the maintenance strategy recommended for this error type.
2100	ABORT	Could not allocate the necessary system resources to run this test. 1. Retry the command at 1-minute intervals for a maximum of 5 times. 2. If the test continues to abort, escalate the problem.
1313	FAIL	The TN464F UDS1 circuit pack could not deactivate the loopback through the Customer Loopback Jack. 1. Retry the *test ds1-loop UUCSS end-loopback/span-test* command at 1-minute intervals for a maximum of 5 times. 2. If the test continues to fail with this error code, escalate the problem.
1314	FAIL	The TN464F UDS1 circuit pack could not deactivate the loopback through the far-end CSU. 1. Make sure that the far-end DS1 is installed if the far-end CSU is a 120A1 AT&T CSU Module. 2. Retry the ***test ds1-loop UUCSS end-loopback/span-test*** command at 1-minute intervals for a maximum of 5 times. 3. If the test continues to fail with this error code, escalate the problem.

Continued on next page

Table 9-424. TEST #1216 End Loopback/Span Test — *Continued*

Error Code	Test Result	Description/ Recommendation
	PASS	The active long-duration loopback or span test on the TN464F circuit pack was successfully terminated.
0	NO BOARD	The UDS1 Interface circuit pack is not administered. 1. Administer the UDS1 Interface circuit pack by issuing the **add ds1 UUCSS** command. 2. Run the test again. 3. If the test continues to return NO BOARD, escalate the problem.

ICSU Status LEDs Test (#1227)

The TN464F UDS1 circuit pack has four status LEDs on the faceplate in addition to the three standard faceplate LEDs. These four status LEDs are associated with the 120A1 Channel Service Unit (CSU) Module that can be connected to the TN464F board via the I/O connector panel on the back of the port carrier. The TN464F circuit pack combined with AT&T's new 120A1 CSU Module forms an Integrated CSU (ICSU).

This test is a visual test. It will light the four status LEDs red for 5 seconds, then light them green for 5 seconds, then light them yellow for 5 seconds, then turn the LEDs off and returns control of the status LEDs to the circuit pack.

This test will only be executed on TN464F or later suffix UDS1 circuit packs administered for 24-channel operation (1.544 bit rate).

If the 120A1 CSU Module is not physically installed, the status LEDs are always off and this test will abort

Table 9-425. TEST #1227 ICSU Status LEDs Test

Error Code	Test Result	Description/ Recommendation
	ABORT	Internal System Error 1. Retry the command at 1-minute intervals a maximum of 5 times. 2. If the test continues to abort, escalate the problem.
1005	ABORT	The ICSU Status LEDs test can not be executed for the current configuration. The test applies only to TN464F or later UDS1 circuit packs administered for 24-channel operation (1.544 bit rate). 1. If the circuit pack is a TN464F or later suffix UDS1 circuit pack, then retry the command. 2. If the test continues to abort, escalate the problem.
1951	ABORT	The ICSU Status LEDs Test can not be executed because a 120A1 or later suffix CSU Module is not physically installed. If using a 120A1 CSU Module, physically connect it to the TN464F board on the back of the port carrier. Otherwise, ignore this abort.

Continued on next page

Table 9-425. TEST #1227 ICSU Status LEDs Test — *Continued*

Error Code	Test Result	Description/ Recommendation
2100	ABORT	Could not allocate the necessary system resources to run this test. 1. Retry the command at 1-minute intervals for a maximum of 5 times. 2. If the test continues to abort, escalate the problem.
2500	ABORT	Internal System Error. 1. Retry the command. 2. If the test continues to abort, follow normal escalation procedures.
	PASS	The ICSU Status LEDs test executed successfully. A PASS result, however, does not necessarily mean that the status LEDs behaved properly. It only means that the software successfully attempted to light the status LEDs. This is a visual test. The service technician must visually exam the behavior of the LEDs while the test is running. The LEDs are functioning properly if the four status LEDs are lit red for 5 seconds, then lit green for 5 seconds, then lit yellow for 5 seconds. If the LEDs behave differently, the board should be replaced at the customer's convenience.
0	NO BOARD	The UDS1 Interface circuit pack is not administered. 1. Administer the UDS1 Interface circuit pack by issuing the **add ds1 UUCSS** command. 2. Run the test again. 3. If the test continues to return NO BOARD, escalate the problem.

Maintenance Object Repair Procedures
WAE-PORT

W

WAE-PORT (Wideband Access Endpoint Port)

MO Name As It Appears in Alarm Log	Alarm Level	Initial System Technician Command to Run (a)	Full Name of MO
WAE-PORT (a)	MINOR	test access-endpoint *extension* l	Wideband Access
WAE-PORT	WARNING	test access-endpoint *extension*	Endpoint Port

a. For additional repair information, see also DS1-BD (DS1 Interface Circuit Pack) Maintenance documentation.

Wideband Switching supports end-to-end connectivity between customer endpoints at data rates from 128 to 1536 kbps over T1 facilities and to 1984 kbps over E1 facilities. DEFINITY switching capabilities are extended to support wideband calls comprised of multiple DS0s that are switched end-to-end as a single entity.

Wideband Switching extends the Administered Connections feature to include non-signaling wideband access endpoints. Endpoint application equipment with direct T1 or E1 interfaces may connect directly to the switch's line-side facilities; application equipment without T1 or E1 interfaces requires a terminal adapter such as a DSU/CSU. The terminal adapter or endpoint application equipment is connected to the TN464C Universal DS1 circuit pack.

These endpoints are administered as wideband access endpoints and have no signaling interface to switch; they simply transmit and receive data. (Some applications detect and respond to the presence or absence of data). Calls are initiated from these endpoints using the Administered Connections feature.

Multiple access endpoints on one line-side UDS1 circuit pack facility are separate and distinct within the facility. Endpoint application equipment must be administered to send and receive the correct data rate over the correct DS0s. All Administered Connections originating from wideband access endpoints use the entire bandwidth administered for the endpoint. An incoming call of a different data rate then that administered of the endpoint cannot be routed to the endpoint.

Although Wideband Access Endpoints are used primarily for line-side facilities, these endpoints can also be administered on network DS1 facilities to connect DEFINITY to non-switched network services, such as the AT&T fractional T-1 service. An example of this is the AT&T Static Integrated Network Access, where a trunk group to AT&T 4ESS Switched Services shares an access T-1 facility with a Wideband Access Endpoint. In this case, the Wideband Access Endpoint is connected to the AT&T fractional T-1 service, and it does not terminate on local endpoint equipment but is connected to a far-end CPE (for example, another DEFINITY PBX) via the dedicated fractional T-1. All Wideband Access Endpoint functionality and operation is identical on both line-side and network facilities. However, because maintenance capabilities are limited to the Wideband Access Endpoint interface, and because faults can occur end-to-end, troubleshooting procedures based on an end-to-end view of the network is required.

Wideband access endpoint port maintenance provides a strategy to maintain a wideband access endpoint port via a port on the Universal DS1 interface circuit pack hardware. The maintenance strategy covers logging wideband access endpoint port hardware errors, running tests for port initialization, periodic and scheduled maintenance, demand tests, and alarm escalation and resolution. Two different port service states are specified in the wideband access endpoint port maintenance:

- *out-of-service*: the port is in a deactivated state and cannot be used for calls
- *in-service*: the port is in an activated state and can be used for calls

  If the UDS1 Interface circuit pack is out of service, all ports on it are taken out of service and a Warning alarm is raised.

Hardware Error Log Entries and Test to Clear Values

Wideband Access Endpoint Maintenance Error Log Entries					
Error Type	**Aux Data**	**Associated Test**	**Alarm Level**	**On/Off Board**	**Test to Clear Value**
0*	0	Any	Any	Any	test access-endpoint *extension* sh r 1
18(a)	0	busyout access-endpoint	WARNING	OFF	release access-endpoint *extension*
130(b)		None	WARNING	ON	test access-endpoint *extension*
1281(c)		Conference Circuit (Test #7)	MINOR	ON	test access-endpoint *extension* l r 4
1537(d)		NPE Crosstalk Test (#6)	MINOR	ON	test access-endpoint *extension* l r 3
1793(e)		None			test board *UUCSS* long
3840(f)	Any	Port Audit and Update (Test #36)			

* Run the Short Test Sequence first. If all tests pass, run the Long Test Sequence. Refer to the appropriate test description and follow the recommended procedures.

Notes:

a. The wideband access endpoint has been busied out by a **busyout access-endpoint** extension command. No calls can be made to this extension.

b. The circuit pack has been removed or has been insane for more than 11 minutes. To clear the error, reinsert or replace the circuit pack.

c. The Conference Circuit Test (#7) failed on this port. See "Conference Circuit Test (#7)" on page W-9 for repair procedures.

d. The NPE Crosstalk Test (#6) failed on this port. See "NPE Crosstalk Test (#6)" on page W-6 for repair procedures.

e. The TN464C UDS1 Interface circuit pack has failed. See UDS1-BD.

f. The Port Audit and Update Test (#36) failed due to an internal system error. Enter **status access-endpoint** extension and verify the status of the port. If the wideband access endpoint port is out of service, enter **release access-endpoint** extension to put it back into service. Retry the test command. If the test continues to fail, then escalate the problem.

System Technician-Demanded Tests: Descriptions and Error Codes

Always investigate tests in the order presented in the table below when inspecting errors in the system. By clearing error codes associated with the *NPE Crosstalk Test*, for example, you may also clear errors generated from other tests in the testing sequence.

Order of Investigation	Short Test Sequence	Long Test Sequence	D/ND*
NPE Crosstalk Test (#6)		X	ND
Conference Circuit Test (#7)		X	ND
Port Audit and Update Test (#36)	X	X	ND

* D = Destructive; ND = Nondestructive

NPE Crosstalk Test (#6)

One Network Processing Element (NPE) resides on the TN464C circuit pack. The NPE controls port connectivity and gain, and provides conferencing functions on a per-port basis. The NPE Crosstalk Test verifies that this port's NPE channel talks on the selected time slot, and does not cross over to time slots reserved for other connections. If the NPE is not working correctly, one-way and noisy connections may be observed. This test is usually part of a port's long test sequence and takes 20 to 30 seconds to complete

Table 9-426. TEST #6 NPE Crosstalk Test

Error Code	Test Result	Description/ Recommendation
	ABORT	System resources required for this test are not available. 1. Retry the command at 1-minute intervals a maximum of 5 times. 2. If the test continues to abort, escalate the problem.
1000	ABORT	System resources required to run this test are not available. The port may be in use on a valid call. Use the **status access-endpoint** extension or command to determine when the port is available for testing. 1. Retry the command at 1-minute intervals a maximum of 5 times. 2. If the test continues to abort, and the port is not in use, escalate the problem.
1001	ABORT	System resources required for this test are not available. 1. Retry the command at 1-minute intervals a maximum of 5 times. 2. If the test continues to abort, escalate the problem.
1002	ABORT	The system could not allocate time slots for the test. The system may be under heavy traffic conditions or it may have time slots out-of-service due to TDM-BUS errors. Use **status health** to determine if the system is experiencing heavy traffic. Refer to the TDM-BUS to diagnose any active TDM-BUS errors. 1. If system has no TDM-BUS errors and is not handling heavy traffic, repeat test at 1-minute intervals a maximum of 5 times. 2. If the test continues to abort, escalate the problem.

Continued on next page

Table 9-426. TEST #6 NPE Crosstalk Test — *Continued*

Error Code	Test Result	Description/ Recommendation
1003	ABORT	The system could not allocate a tone receiver for the test. The system may be too big for the number of Tone Detectors present, or some Tone Detectors may be out of service. **List measurement tone-receiver** displays information on the system's tone receivers. 1. Look for and resolve any TTR-LEV errors in the Error Log. 2. Look for and resolve any TONE-PT errors in the Error Log. 3. If neither condition exists, retry the test at 1-minute intervals a maximum of 5 times. 4. If the test continues to abort, escalate the problem.
1004	ABORT	The port has been seized by a user for a valid call. Use **status access-endpoint** extension to determine when the port is available for testing. The port is available when it is in the **in-service/idle** state. 1. Retry the command at 1-minute intervals a maximum of 5 times. 2. If the test continues to abort, and the port is not in use, escalate the problem.
1020	ABORT	The test did not run because of a previously existing error on the specific port or a more general circuit pack error. 1. Examine the Error Log for existing errors against this port or the circuit pack and attempt to diagnose the already existing error.
2000	ABORT	Response to the test request was not received within the allowable time period.
2100	ABORT	System resources required for this test are not available. 1. Retry the command at 1-minute intervals a maximum of 5 times. 2. If the test continues to abort, escalate the problem.

Continued on next page

Table 9-426. TEST #6 NPE Crosstalk Test — *Continued*

Error Code	Test Result	Description/ Recommendation
	FAIL	The NPE of the tested port was found to be transmitting in error. This will cause noisy and unreliable connections. 1. Replace the circuit pack.
	PASS	The port is correctly using its allocated time slots. 1. Investigate user-reported troubles on this port using other port tests and by examining the terminal adapter or external wiring.

Conference Circuit Test (#7)

One or more Network Processing Elements (NPEs) reside on each circuit pack with a TDM Bus interface. (The TN464C UDS1 circuit pack has one SCOTCH-NPE chip instead of several NPE chips). The NPE controls port connectivity and gain, and provides conferencing functions on a per-port basis. The Conference Circuit Test verifies that the NPE channel for the port being tested can correctly perform the conferencing function. The NPE is instructed to listen to several different tones and conference the tones together. The resulting signal is then measured by a Tone Detector port. If the level of the tone is within a certain range, the test passes

Table 9-427. TEST #7 Conference Circuit Test

Error Code	Test Result	Description/ Recommendation
	ABORT	System resources required for this test are not available. 1. Retry the command at 1-minute intervals a maximum of 5 times. 2. If the test continues to abort, escalate the problem.
1000	ABORT	System resources required to run this test are not available. The port may be in use on a valid call. Use the **status access-endpoint** extension command to determine when the port is available for testing.
1004	ABORT	The port has been seized by a user for a valid call. Use the **status access-endpoint** extension command to determine when the port is available for testing. The port is available when it is in the **in-service/idle** state. 1. Retry the command at 1-minute intervals a maximum of 5 times. 2. If the test continues to abort, and the port is not in use, escalate the problem.
1020	ABORT	The test did not run due to a previously existing error on the specific port or because of a more general circuit pack error. 1. Examine the Error Log for existing errors against this port or circuit pack, and attempt to diagnose the previously existing error.

Continued on next page

Table 9-427. TEST #7 Conference Circuit Test — *Continued*

Error Code	Test Result	Description/ Recommendation
2000	ABORT	Response to the test request was not received within the allowable time period.
2100	ABORT	System resources required for this test are not available. 1. Retry the command at 1-minute intervals a maximum of 5 times. 2. If the test continues to abort, escalate the problem.
	FAIL	The NPE of the tested port did not conference the tones correctly. This causes noisy and unreliable connections. Even though wideband calls do not use the conferencing feature on the NPE, this failure indicates problems with the circuit pack hardware. 1. Replace the circuit pack.
	PASS	The port can correctly conference multiple connections. 1. Investigate user-reported troubles on this port using other port tests and by examining the terminal adapter or external wiring.

Port Audit and Update Test (#36)

This test sends port level translation data from switch processor to the UDS1 Interface circuit pack to ensure that the wideband access endpoint port's translation is correct

Table 9-428. TEST #36 Audit and Update Test

Error Code	Test Result	Description/ Recommendation
	ABORT	Internal System Error 1. Retry the command at 1-minute intervals a maximum of 5 times. 2. If the test continues to abort, escalate the problem.
1006	ABORT	The port is out-of-service. If the port is busied out: 1. Issue **release access-endpoint <extension>** command to put the port back into in-service. 2. Retry the test command. If the port is not busied out: a. Check the error and alarm logs for WAE-PORT and UDS1-BD errors and alarms and follow the recommended repair procedures.
2000	ABORT	Response to the test request was not received within the allowable time period.
2100	ABORT	Could not allocate the necessary system resources to run this test. 1. Retry the command at 1-minute intervals a maximum of 5 times. 2. If the test continues to abort, escalate the problem.
	FAIL	Internal System Error 1. Retry the command at 1-minute intervals a maximum of 5 times. 2. If the test continues to fail, escalate the problem.
	PASS	Port translation has been updated successfully.

Maintenance Object Repair Procedures XXX-BD

X

XXX-BD (Common Port Circuit Pack)

MO Name As It Appears in Alarm Log	Alarm Level	Initial System Technician Command to Run (a)	Full Name of MO
XXX-BD (b)	MAJOR	test board UUCSS	Common Port Circuit Pack Maintenance
XXX-BD (b)	MINOR	test board UUCSS	Common Port Circuit Pack Maintenance
XXX-BD (b)	WARNING	test board UUCSS	Common Port Circuit Pack Maintenance

a. UU is the universal cabinet number (1 for PPN, 2 - 44 for EPNs). C is the carrier designation (A, B, C, D, or E). SS is the number of the slot in which the circuit pack resides (01 to 21).

b. Refer to the appropriate circuit pack documentation to get the correct MO name displayed in this field. It usually ends with BD.

Common Port Circuit Pack Maintenance is a set of common tests used by all the circuit packs listed in Table 9-429 below. The common portion of these circuit packs is the generic hardware that interfaces with the TDM Bus. The XXX-BD designation is also used on G3-MT displays when **reset board** is entered with an empty circuit pack slot, or with a circuit pack type that is in conflict with the actual board type administered for that slot. All circuit pack suffixes (B,C, D, etc.) are supported by XXX-BD Maintenance documentation.

When any of the Common Port Circuit Packs are physically removed from the backplane, no alarm will be logged for approximately 11 minutes. (In the case of the TN754 Digital Line,TN566 DEFINITY AUDIX, and TN758 Pooled Modem circuit packs, Digital Line and Pooled Modem circuit packs, approximately 21 minutes will elapse before an alarm is logged.) When a circuit pack that has been removed is alarmed, the alarm type is minor and is classified as an on-board alarm. The time delay permits maintenance activity to be performed without triggering an additional alarm.

Alarms are logged against only those common port circuit packs on which ports have been administered. In a heavily loaded system, the interval between the removal of a Common Port Circuit Pack and the logging of the alarm may be several minutes longer. The circuit packs in the following list contain ports on the TDM bus. Suffixes are not shown; for a list of all circuit packs supported, see Table 2-13 and Table 2-14 in Chapter 2, "Hardware Configurations". Those that appear in **bold** type are documented separately under their own maintenance object name. Only those with an asterisk are supported by G3r V1 systems.

Table 9-429. Common Port Circuit Packs

TN Code	Name	Maintenance Object
CO Trunk Circuit Packs		
TN438	CO Trunk	CO-BD
TN447	CO Trunk	CO-BD
TN465	CO Trunk	CO-BD
TN747*	CO Trunk	CO-BD
TN2138	CO Trunk	CO-BD
TN2147	CO Trunk	CO-BD
DID Trunk Circuit Packs		
TN436	DID Trunk	DID-BD
TN459	DID Trunk	DID-BD
TN753*	DID Trunk	DID-BD
TN2139	DID Trunk	DID-BD
TN2146	DID Trunk	DID-BD

Continued on next page

Table 9-429. Common Port Circuit Packs — *Continued*

TN Code	Name	Maintenance Object
Analog Tie Trunk Circuit Packs		
TN437	Tie Trunk	TIE-BD
TN439	Tie Trunk	TIE-BD
TN458	Tie Trunk	TIE-BD
TN497	Tie Trunk	TIE-BD
TN760*	Tie Trunk	TIE-BD
TN2140	Tie Trunk	TIE-BD
Auxiliary Trunk Circuit Packs		
TN417	Auxiliary Trunk	AUX-BD
TN763*	Auxiliary Trunk	AUX-BD
DS1 Trunk Circuit Packs		
TN464*	Universal DS1 Trunk	UDS1-BD
TN722	DS1 Tie Trunk	DS1-BD
TN767*	DS1 Interface	DS1-BD
Station Circuit Packs		
TN413	Digital Line	DIG-BD
TN467	Analog Line	ANL-BD
TN468	Analog Line	ANL-BD
TN479	Analog Line	ANL-BD
TN556*	ISDN BRI Line	BRI-BD
TN735*	MET Line	MET-BD
TN742*	Analog Line	ANL-BD
TN746*	Analog Line	ANL-BD
TN754*	Digital Line	DIG-BD
TN762*	Hybrid Line	HYB-BD
TN769*	Analog Line	ANL-BD
TN2135	Analog Line	ANL-BD
TN2136	Digital Line	DIG-BD

Continued on next page

Table 9-429. Common Port Circuit Packs — *Continued*

TN Code	Name	Maintenance Object
TN2144	Analog Line	ANL-BD
TN2149	Analog Line	ANL-BD
TN2180	Analog Line	ANL-BD
Data Circuit Packs		
TN726*	Data Line	DT-LN-BD
TN553*	Packet Data Line	PDATA-BD
TN758*	Pooled Modem	MODEM-BD
Service Circuit Packs		
TN420	Tone Detector	DETR-BD
TN433	Speech Synthesizer	S-SYN-BD
TN457	Speech Synthesizer	S-SYN-BD
TN725*	Speech Synthesizer	S-SYN-BD
TN744*	Call Classifier	CLSFY-BD
TN748*	Tone Detector	DETR-BD
TN750*	Announcement	ANN-BD
TN768*	Tone-Clock	TONE-BD
TN771*	Maintenance/Test	M/T-BD
TN780*	Tone-Clock	TONE-BD
TN566*	DEFINITY AUDIX	AUDIX-BD

* Suported by G3rV1 systems (others are not).

Circuit packs in **bold** type are documented separately under their own maintenance object name.

Hardware Error Log Entries and Test to Clear Values

Common Port Circuit Pack Maintenance Error Log Entries					
Error Type	**Aux Data**	**Associated Test**	**Alarm Level**	**On/Off Board**	**Test to Clear Value**
0*	0	Any	Any	Any	test board UUCSS sh r 1
1(a)	0	Circuit pack removed or SAKI Sanity Test (#53)	MINOR	ON	
18(b)	0	busy-out board UUCSS	WARNING	OFF	release board UUCSS
23(c)	0	None	WARNING	OFF	
36 (d)	4368	none			
125 (e)		None	MINOR	ON	
217 (f)	0	None	WARNING	ON	
257	65535	Control Channel Test (#52)	MINOR	ON	test board UUCSS sh r 20
257 (g)	Any	None			
267 (f)	0	None	WARNING	ON	
513 (h)	Any	None	MINOR	ON	test board UUCSS sh
769 (i)	4358	None			
1025 (j)	4363	NPE Audit Test (#50)			test board UUCSS l r 20
1281 (k)		Ringing Application Test (#51)	MINOR	ON	test board UUCSS r 2
1538 (l)	Any	None	WARNING/ MINOR	ON	
1793 (m)		Neon Test (#220)	MINOR	ON	test board UUCSS r 2
3840 (n)	Any	None			
3999 (o)	Any	None			

* Run the Short Test Sequence first. If all tests pass, run the Long Test Sequence. Refer to the appropriate test description and follow the recommended procedures.

Notes:

a. Error type 1 indicates the circuit pack has stopped functioning or has been physically removed from the system. This error type does not apply to ANN-BD, DETR-BD, S-SYN-BD, M/T-BD, or CLSFY-BD. The alarm is logged approximately 11 minutes after removal of the circuit pack or failure of the SAKI Sanity Test (#53).

   Check for the physical presence of the circuit pack in the slot indicated by the alarm. If the circuit pack is not present, insert one of the proper type. If the circuit pack is present and its red LED is lit, see "LED Alarms without Alarm Log Entry or with Error Type 1" in Chapter 7, "LED Indicators".

b. This error indicates the circuit pack has been busied out. Release the circuit pack via **release board UUCSS**.

c. The circuit pack has been logically administered but not physically installed. The alarm should clear when the circuit pact is installed.

   If the circuit pack is already installed:

   1. Run **test board UUCSS long** and look at any test failures or error codes generated.
   2. If the test does not clear error 23, then execute **reset board UUCSS** and run the long test again.
   3. If the reset/test does not clear error 23, replace the circuit pack.

d. This error applies only to the Maintenance/Test circuit pack (TN771B or TN771C). The error indicates that the hardware associated with the Analog Trunk Testing port of the circuit pack failed to initialize. Note that when this error occurs, the Maintenance/Test circuit pack may report an invalid vintage. Although this error is not service-affecting, the Maintenance/Test circuit pack should be replaced.

e. The circuit pack physically installed in the slot does not match the type that is administered for that slot. Do one of the following:

   - Remove the incorrect circuit pack and replace it with one of the type that is administered for that slot.
   - Use **change circuit pack** to readminister the slot so that it matches the board that is installed, and follow with **reset board**.

f. This error applies to the Maintenance/Test circuit pack TN771D), Tone Detector (TN748B, TN748C, or TN748D), and Call Classifier (TN748) circuit packs. For the Maintenance/Test circuit pack, the error indicates that there is more than one Maintenance/Test circuit pack in the port network. For the Tone Detector or Call Classifier packs, the error indicates that there are more than 10 circuit packs in the system. Remove the circuit pack against which the error is logged.

g. This error indicates transient communication problems with this circuit pack. This error is not service-affecting and no action is required.

h. This error, when reported with Aux data in the range of 4352 to 4358, indicates that the circuit pack has reported an on-board hardware failure. The circuit pack will continuously test the hardware and report the results approximately every 10 minutes. If the hardware problem is resolved, the ‘‘leaky bucket’’ strategy should clear the alarm in approximately 30 minutes. However, if the alarm does NOT clear in 30 minutes, then the circuit pack should be replaced.

i. This error can be ignored, but look for other errors on this circuit pack.

j. This error is not service-affecting and no action is required.

k. This error indicates that no ringing current is detected. Run Test #51, Ringing Application Test, and follow the procedures for Test #51. This error is only applicable to Analog Line circuit packs.

l. The hyperactive circuit pack is out-of-service and may exhibit one or more of the following symptoms:

   1. The common circuit pack level tests such as Test #51 and/or Test #220 are aborting with error code 2000.
   2. The tests run on the ports of this circuit pack are returning with a NO-BOARD.
   3. A busy-out/release of the circuit pack has no affect on test results.
   4. A **list configuration** command shows that the circuit pack and ports are properly installed.

   If the XXX-BD is not a TN754 Digital Line Circuit Pack (DIG-BD), and if this error happens again within 15 minutes, then replace the circuit pack. If the XXX-BD is a TN754 Digital Line Circuit Pack (DIG-BD), then check the alarm level. If the alarm level is a WARNING, this indicates that users are probably causing the hyperactivity by playing with their digital stations. If the circuit pack is really hyperactive then this alarm will be upgrade to a MINOR alarm within 1 hour. If the alarm level is a MINOR alarm, then replace the circuit pack. To replace the circuit pack, refer to "Replacing SPE Circuit Packs" in Chapter 5, "Responding to Alarms and Errors".

m. This error indicates that no neon current is detected. Run **test board UUCSS short** and follow the procedures for Test #220. This error is only applicable to TN769 and TN746 Analog Line circuit packs.

n. This error is not service-affecting and no action is required.

o. Error type 3999 indicates that the circuit pack sent a large number of control channel messages to the switch within a short period of time. If error type 1538 is also present, then the circuit pack was taken out-of-service due to hyperactivity. If error type 1538 is not present, then the circuit pack has not been taken out-of-service, but it has generated 50% of the messages necessary to be considered hyperactive. This may be completely normal during heavy traffic periods. However, if this error type is logged when the circuit pack is being lightly used, it may indicate a problem with the circuit pack or the equipment attached to it.

System Technician-Demanded Tests: Descriptions and Error Codes

Always investigate tests in the order presented in the table below when inspecting errors in the system. By clearing error codes associated with the *NPE Audit*, for example, you may also clear errors generated from other tests in the testing sequence.

Order of Investigation	Short Test Sequence	Long Test Sequence	Reset Board Sequence	D/ND*
NPE Audit Test (#50)		X		ND
Ringing Application Test (#51) (a)	X	X		ND
Control Channel Loop Around Test (#52)	X	X		ND
SAKI Sanity Test (#53) (b)		X	D	
Neon Test (#220) (c)	X	X		ND

* D = Destructive; ND = Nondestructive

Notes:

a. Only applicable to Analog Line circuit packs.

b. The SAKI Sanity Test is run in the Long Test Sequence for the Tone/Clock circuit packs (TN768, TN780) **only**. The test is run on other circuit packs only when they are reset via the **reset board** command.

c. Only applicable to TN746 and TN769 Analog Line circuit packs.

NPE Audit Test (#50)

The system sends a message to the on-board microprocessor to update the network connectivity translation for all the Network Processing Elements (NPEs) on the circuit pack

Table 9-430. TEST #50 NPE Audit Test

Error Code	Test Result	Description/ Recommendation
None 2100	ABORT	System resources required for this test are not available.
1019	ABORT	Test already in progress.
	FAIL	Internal System Error 1. Retry the command at 1-minute intervals a maximum of 5 times. 2. If the test continues to abort, escalate the problem.
	PASS	The circuit pack's NPEs have been updated with their translation.
	EXTRA BD	Certain circuit packs have limitations on how many circuit packs can be in the system or port network such as the Maintenance/Test circuit pack (TN771B or TN771C), the Tone Detector circuit pack (TN748B, TN748C or TN748D) and the Call Classifier (TN744). The Maintenance/Test circuit pack allows only one circuit pack per port network. The Tone Detector and Call Classifier allow only 10 circuit packs in each system. All additional circuit packs will return EXTRA-BD and should be removed.
Any	NO BOARD	This is normal if the test is being done when (a) the board is not physically in the system or (b) the system is booting up. Otherwise, there is some inconsistency between the physical configuration and the data kept in the system. 1. Verify that the board is physically in the system. 2. Verify that the system is not in a stage of booting up. 3. Retry the command at 1-minute intervals for a maximum of 5 times. 4. If the test continues to return NO BOARD, escalate the problem.

Ringing Application Test (#51)

This test checks the ringing application circuitry common to all ports on an Analog Line circuit pack

Table 9-431. TEST #51 Ringing Application Circuit Test

Error Code	Test Result	Description/ Recommendation
1000 2100	ABORT	Could not allocate the necessary system resources to run test.
	ABORT	Could not allocate the necessary system resources to run test. The circuit pack is not installed. Internal system error
2000	ABORT	Response to the request was not received within the allowable time period. 1. If Error Type 1538 is present in the Error Log, follow the recommended maintenance strategy.
1004	ABORT	The port was seized by a valid call during the test. The test has been aborted. Use the **display port UUCSSpp** command to determine the station extension. Use the **status station** command to determine the service state of the port. If the service state indicates that the port is in use, then the port is unavailable for certain tests. (Refer to Chapter 8, "Maintenance Commands", for a full description of all possible states). You must wait until the port is idle before retesting. 1. Retry the command at 1-minute intervals a maximum of 5 times. 2. If the test continues to abort and the port is idle, escalate the problem.

Continued on next page

Table 9-431. TEST #51 Ringing Application Circuit Test — *Continued*

Error Code	Test Result	Description/ Recommendation
1008	ABORT	Could not allocate a ringing circuit for one of the following reasons: all the ringing circuits are in use; the ringing generator is defective; ringing generator is not wired correctly. 1. If the test continues to abort, look for RING-GEN error in Error Log. a. If there are RING-GEN errors, refer to RING-GEN Maintenance documentation and try to resolve any problem(s). Then, go to Step 2. b. If there are no RING-GEN errors, and the test continues to abort, issue the **test board UUCSS** command on other TN742, TN769, or TN746 Analog circuit packs. If an ABORT with error code 1008 occurs for this test on other circuit packs as well, then the ringing generator may be defective or may not be wired properly. Refer to RING-GEN Maintenance documentation for details. If an ABORT with error code 1008 does NOT occur on the other ports, then all four ring generators are in use. Exit from this documentation. 2. Retry the command. 3. If the test continues to abort, escalate the problem.
	FAIL	No ringing current is detected. The ringing application circuitry on this circuit pack probably is not healthy. 1. Retry the command again. 2. If the test continues to fail, look for RING-GEN error in Error Log. a. If there are RING-GEN errors, refer to the RING-GEN Maintenance documentation and try to resolve any problem(s). b. If there are no RING-GEN errors, then replace the circuit pack. 3. Retry the command again. 4. If the test continues to fail, escalate the problem.

Continued on next page

Table 9-431. TEST #51 Ringing Application Circuit Test — *Continued*

Error Code	Test Result	Description/ Recommendation
	PASS	Ringing current is detected or this vintage of the Analog Line circuit pack does not support the Ringing Application Circuit Test. Analog Line circuit packs that DO NOT support Test #51 include TN712 Vintage 13 and earlier and TN742 Vintage 3 and earlier.
Any	NO BOARD	This is normal if the test is being done when (a) the board is not physically in the system or (b) the system is booting up. Otherwise, there is some inconsistency between the physical configuration and the data kept in the system. 1. Verify that the board is physically in the system. 2. Verify that the system is not in a stage of booting up. 3. Retry the command at 1-minute intervals for a maximum of 5 times. 4. If the test continues to return NO BOARD, escalate the problem.

Control Channel Loop Around Test (#52)

This test queries the circuit pack for its circuit pack code and vintage and verifies its records

Table 9-432. TEST #52 Control Channel Loop Around Test

Error Code	Test Result	Description/ Recommendation
None 2100	ABORT	System resources required for this test are not available. 1. Retry the command at 1-minute intervals a maximum of 5 times. 2. If the test continues to abort, escalate the problem.
	FAIL	The circuit pack failed to return the circuit pack code or vintage. 1. Retry the command a few times a maximum of 5 times. 2. If the problem continues, and if the circuit pack is one of the Port circuit packs, replace the circuit pack. Otherwise, if the circuit pack is one of the Processor Complex circuit packs, see Chapter 5, "Responding to Alarms and Errors" for instructions on how to replace the circuit pack. 3. Retry the command a few times a maximum of 5 times. 4. If the test continues to fail, escalate the problem.
	PASS	Communication with this circuit pack is successful.

Continued on next page

Table 9-432. TEST #52 Control Channel Loop Around Test — *Continued*

Error Code	Test Result	Description/ Recommendation
	EXTRA BD	This result should only appear when more than one TN771D Maintenance/Test circuit pack has been installed in this port network. Remove this circuit pack.
Any	NO BOARD	This is normal if the test is being done when (a) the board is not physically in the system or (b) the system is booting up. Otherwise, there is some inconsistency between the physical configuration and the data kept in the system. 1. Verify that the board is physically in the system. 2. Verify that the system is not in a stage of booting up. 3. Retry the command at 1-minute intervals for a maximum of 5 times. 4. If the test continues to return NO BOARD, escalate the problem.

SAKI Sanity Test (#53)

This test is destructive.

This test resets the circuit pack. It is executed as part of the long test sequence only for the Tone-Clock circuit pack and DS1 interface circuit packs. Other common circuit packs can be reset with the **reset board UUCSS** command which also executes this test

Table 9-433. TEST #53 SAKI Sanity Test

Error Code	Test Result	Description/ Recommendation
None	ABORT	System resources required for this test are not available. 1. Retry the command at 1-minute intervals a maximum of 5 times. 2. If the test continues to abort, escalate the problem.
1005	ABORT	Wrong circuit pack configuration to run this test. This error applies only to DS1 interface circuit packs. It means the DS1 interface circuit pack is providing timing for the system and, therefore, it cannot be reset without major system disruptions. 1. If the circuit pack needs to be reset, then set synchronization to another DS1 interface circuit pack or the Tone-Clock circuit pack and try again. Refer to SYNC (Synchronization) Maintenance documentation.
1015	ABORT	Port is not out-of-service. 1. Busy out the circuit pack. 2. Execute command again.
2100	ABORT	System resources required for this test are not available. 1. Retry the command at 1-minute intervals a maximum of 5 times. 2. If the test continues to abort, escalate the problem.
1	FAIL	The circuit pack failed to reset.
2	FAIL	The circuit pack failed to restart. 1. Execute command again. 2. If the problem persists, replace the circuit pack.

Continued on next page

Table 9-433. TEST #53 SAKI Sanity Test — *Continued*

Error Code	Test Result	Description/ Recommendation
	PASS	The circuit pack initializes correctly. 1. Run the short test sequence.
Any	NO BOARD	This is normal if the test is being done when (a) the board is not physically in the system or (b) the system is booting up. Otherwise, there is some inconsistency between the physical configuration and the data kept in the system. 1. Verify that the board is physically in the system. 2. Verify that the system is not in a stage of booting up. 3. Retry the command at 1-minute intervals for a maximum of 5 times. 4. If the test continues to return NO BOARD, escalate the problem.

Neon Test (#220)

This test checks the voltage required to light the neon lamp on an analog terminal. A relay connects a 150V DC source from the backplane of the circuit pack onto the voltage bus, and another relay connects a 2K shunt from the bus to ground. Current in the line is then monitored to determine if the voltage is present. The neon test runs only for TN746 and TN769 Analog circuit packs. If the circuit pack is not a TN746 or TN769, the test will return PASS, but the test is not actually run.

Table 9-434. TEST #220 Neon Test

Error Code	Test Result	Description/ Recommendation
	ABORT	Cannot get the list of translated ports on the circuit pack.
1004	ABORT	The port was seized by a valid call during the test. The test has been aborted. Use the **display port UUCSSpp** command to determine the station extension. Use the **status station** command to determine the service state of the port. If the service state indicates that the port is in use, then the port is unavailable for certain tests. Refer to the status commands described in Chapter 8, "Maintenance Commands" for a full description of all possible states.) You must wait until the port is idle before retesting. 1. Retry the command at 1-minute intervals a maximum of 5 times. 2. If the test continues to abort, escalate the problem.
1008	ABORT	Could not allocate a ringing circuit. Either all the ringing circuits are in use, or the ringing generator is defective or is not wired correctly. 1. Retry the command at 1-minute intervals a maximum of 5 times. 2. If the test continues to abort, look for RING-GEN errors in the Error Log. If an ABORT 1008 occurs for this test on other circuit packs as well, then the ringing generator may be defective or is not wired correctly (see errors for RING-GEN). If it doesn't occur on port test 48 for ANL-16-L, then all four ring phases are in use. 3. If the test to continues to abort, escalate the problem.

Continued on next page

Table 9-434. TEST #220 Neon Test — *Continued*

Error Code	Test Result	Description/ Recommendation
2000	ABORT	Response to the request was not received within the allowable time period.
2100	ABORT	Could not allocate the necessary system resources to run this test.
	ABORT	Could not allocate the necessary system resources to run this test. Internal system error. 1. If Error Type 1538 is present in the Error Log, follow the recommended maintenance strategy.
	FAIL	No neon current is detected. 1) Check the following conditions: ■ Is there a TN755 or TN752 power unit circuit pack installed in the same carrier as the TN746 or TN769 Analog Line circuit pack that failed the test? ■ Verify that each station administered as a neon port on the circuit pack has a neon lamp as opposed to an LED. ■ Look for the failure of Test #220 on other TN746/TN769 circuit packs in the carrier. If Test #220 fails on the other circuit packs also, replace the TN755 or TN752 power unit circuit pack.
	PASS	This circuit pack is a TN746 or TN769 Analog Line circuit pack and the neon current is detected. If this test passes, it can also mean that this circuit pack is not a TN746 or TN769 Analog Line circuit pack.

Continued on next page

Table 9-434. TEST #220 Neon Test — *Continued*

Error Code	Test Result	Description/ Recommendation
Any	NO BOARD	This is normal if the test is being done when (a) the board is not physically in the system or (b) the system is booting up. Otherwise, there is some inconsistency between the physical configuration and the data kept in the system. 1. Verify that the board is physically in the system. 2. Verify that the system is not in a stage of booting up. 3. Retry the command at 1-minute intervals for a maximum of 5 times. 4. If the test continues to return NO BOARD, escalate the problem.

References

AA

The following is a list of DEFINITY Generic 3 documents including a brief description of each document.

To order copies, refer to the address on the back of this document's title page. For addition DEFINITY documents, refer to the *GBCS Publications Catalog,* 555-000-010, available from the AT&T Customer Information Center.

Basic

The following are basic documents for anyone using DEFINITY.

An Introduction to DEFINITY Communications System Generic 3, Issue 1 **555-230-023**

Provides a detailed overview of the system including descriptions of many of the major features, applications, hardware, system capabilities, and the AT&T support provided with the system. This document reflects Generic 3 Version 2 software, but still contains relevant information.

DEFINITY Communications System Generic 3 Planning and Configuration, Issue 2 **555-230-601**

Provides step-by-step procedures for the account team in determining the customer's equipment and hardware requirements to configure a system according to the customer specifications. Includes detailed requirements and

block diagrams. This document reflects Generic 3 Version 2 software, but still contains relevant information.

DEFINITY Communications System Generic 3 Feature Description, Issue 2 **555-230-204**

Provides comprehensive technical descriptions of system features and parameters. Includes the applications and benefits, feature interactions, administration requirements, hardware and software requirements, and a brief discussion of data communications and private networking configurations.

DEFINITY Communications System Generic 3 Version 4 Implementation, Issue 1 **555-230-655**

Provides step-by-step procedures for preparing the hardcopy forms that correspond to the screens and are required to implement the features, functions, and services of the system. Includes procedures for completing a communications survey. Includes a complete set of blank forms (555-230-653B).

DEFINITY Communications System Generic 3 Version 4 Implementation Blank Forms, Issue 1 **555-230-653B**

Provides additional blank hardcopy forms that correspond to the screens and are required to implement the features, functions, and services of the system.

Copies of these forms are automatically included with the *DEFINITY Communications System Generic 3 Version 4 Implementation, Issue 1*, 555-230-653. Use this order number to purchase additional forms.

DEFINITY Communications System Generic 3 System Description and Specifications, Issue 3 **555-230-206**

Provides a technical description of the systems and is intended for service personnel, sales personnel, and customers who need a comprehensive overview of the system. Includes descriptions of hardware, software features, technical specifications, environment requirements, maintenance requirements, and illustration of components.

DEFINITY Communications System Generic 3 Version 4 Traffic Reports, Issue 2 **555-230-511**

Provides detailed descriptions of all the measurement, status, and security reports available in the system and is intended for administrators who validate traffic reports and evaluate system performance. This document was titled *System Reports* for earlier systems. Includes corrective actions for potential problems.

DEFINITY Communications System Generic 1 and Generic 3 Installation and Test, Issue 5 **555-230-104**

Provides descriptions of the procedures for installing and testing the system's common equipment and adjuncts. Includes set up procedures for the system management terminal, power and grounding requirements, and testing steps. Includes compete details on system wiring. Provides both domestic and international information.

DEFINITY Communications System Generic 3s and Generic 3i Installation, Issue 1

555-230-894 UK English
555-230-895 German
555-230-896 French
555-230-897 Spanish
555-230-900 Chinese

Provides procedures and information for hardware installation and initial testing of the DEFINITY Communications System Generic 3, models Generic 3i and Generic 3 single-carrier cabinet switches only. The UK version will be shipped with all single-carrier cabinet systems domestically.

DEFINITY Communications System Generic 3s and Generic 3i Installation (for Global Market), Issue 1 **555-230-104**

Provides descriptions of the procedures for installing and testing the system's common equipment and adjuncts. Includes set up procedures for the system management terminal, power and grounding requirements, and testing steps. Includes compete details on system wiring. Provides both domestic and international information for single carrier cabinets only. This document reflects Generic 3 Version 4.

DEFINITY Communications System Generic 3 Version 1.1 - Version 4 Upgrades and Additions, Issue 2 **555-230-107**

Provides procedures for an installation technician to convert an existing DEFINITY Generic 1, Generic 2, Generic 3 Version 1, Generic 3 Version 2, Generic 3 Version 4, or System 75 R1V3 to Generic 3 Version 4. Included are upgrade considerations, lists of required hardware, and step-by-step upgrade procedures. Also included are procedures to add control carriers, switch node carriers, port carriers, circuit packs, auxiliary cabinets, and other equipment.

DEFINITY Communications System Generic 3r Maintenance, Issue 4 **555-230-105**

DEFINITY Communications System Generic 3i/s/vs Maintenance, Issue 7 **555-204-105**

Provide detailed descriptions of the procedures for monitoring, testing, and maintaining the systems. Included are maintenance commands, step-by-step trouble-clearing procedures, the procedures for using all tests, and explanations of the system's error codes.

AT&T GBCS Products Security Handbook, Issue 4 **555-025-600**

Provides information about the risks of telecommunications fraud and measures for addressing those risks and preventing unauthorized use of GBCS products. This document is intended for telecommunications managers, console operators, and security organizations within companies.

DEFINITY Communications System and System 75 and System 85 Terminals and Adjuncts Reference, Issue 7 **555-015-201**

Provides descriptions of the peripheral equipment that can be used with System 75, System 85, and DEFINITY Communications System. This document is intended for customers and AT&T account teams for selecting the correct peripherals to accompany a system.

DEFINITY Communications System Generic 1 and Generic 3 Voice Terminal Operations, Issue 1 **555-230-701**

Provides detailed operating instructions for the system features on each type of voice terminal. Included are definitions of the voice features and user requirements.

DEFINITY Communications System Generic 1 and Generic 3 System Management, Issue 1 **555-230-500**

Provides operating procedures for the Generic 1 Manager terminal and the G# Management Terminal for Generic 3 Version 1 systems. This document is intended for the System Administrator. Also included is information on administrative tasks and system backup procedures.

DEFINITY Communications System Generic 1, Generic 3, and System 75 Voice Terminal Guide Builder, Issue 1 **555-230-755**

Provides capability to produce laser-printed documentation for specific voice terminals. The software is supported by a comprehensive user's guide and on-line help. This product requires a 386 PC, minimum of 6MB disk space, minimum of 4MB RAM, a printer supported by Microsoft GDI printer drive, and Microsoft Windows 3.1 or higher. A mouse is recommended.

Call Center

The following list of documents are Call Center specific. Refer also to the Basic DEFINITY documents.

DEFINITY Communications System Generic 3 Call Vectoring/EAS Guide, Issue 4 **585-230-520**

Provides information on how to write, use, and troubleshoot vectors, which are command sequences that process telephone calls in an Automatic Call Distribution (ACD) environment. It is provided in two parts: tutorial and reference.

The tutorial provides step-by-step procedures for writing and implementing basic call vector scripts.

The reference includes detailed descriptions of the call vectoring features, vector management, vector administration, adjunct routing, troubleshooting, and interactions with management information systems (including the Call Management System).

DEFINITY Communications System Generic 3 Basic Call Management System (BCMS) Operations, Issue 4 **555-230-704**

Provides detailed instructions on how to generate reports and manage the system and is intended for telecommunications managers who wish to use BCMS reports and system managers responsible for maintaining the system.

If Issue 4 is unavailable, use Issue 3.

Networks

The following list of documents are network specific. Refer also to the Basic DEFINITY documents.

DEFINITY Communications System Generic 3 Wideband Technical Reference, Issue 1 **555-230-230**

Provides detailed information regarding the Wideband Switching feature for the system and is intended for users and technical support personnel involved with the installation, administration, and operation of this feature. This feature provides high speed end-to-end connectivity between customer endpoints where dedicated facilities are not economical or appropriate. The primary function is to support high speed video-conferencing and data applications.

DEFINITY Communications System Generic 2.2 and Generic 3 Version 2 DS1/CEPT1/ISDN PRI Reference Manual, Issue 1 **555-025-107**

Provides a detailed technical description of digital trunks in the DEFINITY Communication Systems. This includes trunks conforming to the DS1 standard (1.544 Mbps) and the CEPT1 standard and all other methods of signalling, including bit oriented signalling as well as ISDN-PRI signalling. This document includes background information on these topics, information on how digital trunk capabilities have been designed into the DEFINITY systems and information for field personnel and customers on how to provision and administer digital trunk capabilities and features. Provides both domestic and international information.

Application Specific

The following list of documents are application specific. Refer also to the Basic DEFINITY documents.

DEFINITY Communications System Generic 2 to Generic 3 Version 4 Transition Reference, Issue 1 **555-230-636**

Provides detailed descriptions of the difference between features and administrative forms for systems Generic 2 to Generic 3 Version 4 and is intended for AT&T personnel and customers involved in planning upgrades and migrations from an older system. Includes descriptions of new administrative commands.

DEFINITY Communications System Generic 3 CallVisor ASAI Planning Guide, Issue 4 **555-230-222**

Provides procedures and directions for the account team and customer personnel for effectively planning and implementing the CallVisor Adjunct/Switch Application Interface (ASAI) PBX-Host environment. The CallVisor ASAI is a communications interface that allows adjunct processors to access switch features and to control switch calls. It is implemented using an Integrated Services Digital Network (ISDN) Basic Rate Interface (BRI). Included are hardware and software requirements.

DEFINITY Communications System Generic 3 CallVisor ASAI Protocol Reference, Issue 4 **555-230-221**

Provides detailed layer 3 protocol information regarding the CallVisor Adjunct/Switch Application Interface (ASAI) for the systems and is intended for the library or driver programmer of an adjunct processor to create the library of commands used by the applications programmers. Describes the ISDN message, Facility Information Elements, and information elements.

DEFINITY Communications System Generic 3 CallVisor ASAI Technical Reference, Issue 4 **555-230-220**

Provides detailed information regarding the CallVisor Adjunct/Switch Application Interface (ASAI) for the systems and is intended for the application designer responsible for building and/or programming custom applications and features.

DEFINITY Communications System Generic 3 Installation, Administration, and Maintenance of CallVisor® ASAI Over the DEFINITY LAN Gateway Issue 1 **555-230-223**

Provides procedures for installation, administration, and maintenance of the CallVisor Adjunct/Switch Application Interface (ASAI) Ethernet application and is intended for system administrators, telecommunications managers, Management Information System (MIS) managers, LAN managers, and AT&T personnel. The ASAI-Ethernet application provides ASAI functionality using 10Base-T Ethernet rather than BRI as a transport media.

DEFINITY Communications System Generic 3 Automatic Call Distribution (ACD) Agent Instructions, Issue 4 **555-230-722**

Provides information for use by agents after they have completed ACD training. Includes descriptions of ACD features and the procedures for using them.

DEFINITY Communications System Generic 3 Automatic Call Distribution (ACD) Supervisor Instructions, Issue 4 **555-230-724**

Provides information for use by supervisors after they have completed ACD training. Includes descriptions of ACD features and the procedures for using them.

DEFINITY Communications System Generic 1 and Generic 3 Console Operation, Issue 2 **555-230-700**

Provides operating instructions for the attendant console. Included are descriptions of the console control keys and functions, call-handling procedures, basic system troubleshooting information, and routine maintenance procedures.

DEFINITY Communications System Generic 1 and Generic 3 Console Quick Reference, Issue 1

555-230-890 UK English
555-230-891 German
555-230-892 French
555-230-893 Spanish
555-230-920 Chinese

Provides operating instructions for the attendant console. Included are descriptions of the console control keys and functions, call handling, basic system troubleshooting information, and routine maintenance procedures.

An Introduction to DEFINITY Communications System Generic 3 Hospitality Services, Issue 1 **555-230-021**

Provides an overview of the features available for use by the lodging and health industries to improve their property management and to provide assistance to their employees and clients. Included are brief definitions of many of the system features, descriptions of the hardware, planning considerations, and list of the system capabilities.

DEFINITY Communications System Generic 1 and Generic 3 User's Guide Hospitality Operations, Issue 2 **555-230-723**

Provides step-by-step procedures for using the features available for use by the lodging and health industries to improve their property management and to provide assistance to their employees and clients. Includes detailed descriptions of reports.

Abbreviations

A

AA
Archangel

AAR
Automatic Alternate Routing

AC
Alternating Current

ACA
Automatic Circuit Assurance

ACB
Automatic Callback

ACD
Automatic Call Distribution

ACU
Automatic Call Unit

ACW
After Call Work

AD
Abbreviated Dialing

ADAP
AUDIX Data Acquisition Package

ADM
Asynchronous Data Module

ADU
Asynchronous Data Unit

AE
Access Endpoint

AIM
Asynchronous Interface Module

AIOD
Automatic Identification of Outward Dialing

ALM-ACK
Alarm Acknowledge

AMW
Automatic Message Waiting

AN
Analog

ANI
Automatic Number Identification

AOL
Attendant Offered Load

AP
Applications Processor

APLT
Advanced Private Line Termination

ARS
Automatic Route Selection

ASAI
Adjunct Switch Applications Interface

ASCII
American Standard Code for Information Interchange

ATB
All Trunks Busy

ATD
Attention Dial

ATMS
Automatic Transmission Measurement System

AUDIX
Audio Information Exchange

AUX
Auxiliary

AVD
Alternate Voice/Data

AWOH
Administration Without Hardware

AWT
Average Work Time

B

BCC
Bearer Capability Class

BCMS
Basic Call Management System

BCT
Business Communications Terminal

BHCC
Busy Hour Call Completions

BLF
Busy Lamp Field

BN
Billing Number

BOS
Bit Oriented Signaling

BPN
Billed Party Number

BPS
Bits Per Second

BRI
Basic Rate Interface

BTU
British Thermal Unit

C

CA-TSC
Call-Associated Temporary Signaling Connection

CACR
Cancellation of Authorization Code Request

CAG
Coverage Answer Group

CAMA
Centralized Automatic Message Accounting

CARR-POW
Carrier Port and Power Unit for AC Powered Systems

CAS
Centralized Attendant Service, Call Accounting System

CBC
Call-By-Call and Coupled Bonding Conductor

CC
Country Code

CCIS
Common Channel Interoffice Signaling

CCITT
Consultative Committee for International Telephone and Telegraph

CCMS
Common Channel Message Set

CCS
Centum (Hundred) Call Seconds

CCSA
Common Control Switching Arrangement

CDM
Channel Division Multiplexing

CDOS
Customer-Dialed and Operator Serviced

CDR
Call Detail Recording

CDRP
Call Detail Record Poller

CDRR
Call Detail Recording and Reporting

CDRU
Call Detail Recording Utilities

CEM
Channel Expansion Multiplexing

CEPT1
European Conference of Postal and Telecommunications Rate 1

CI
Clock Input

cm
Centimeter

CM
Connection Manager

CMDR
Centralized Message Detail Recording

CMS
Call Management System

CO
Central Office

COR
Class of Restriction

COS
Class of Service

CP
Circuit Pack

CPE
Customer Premises Equipment

CPN
Called-Party Number

CPN/BN
Calling Party Number/Billing Number

CPTR
Call Progress Tone Receiver

CRC
Cyclical Redundancy Checking

CSA
Canadian Safety Association

CSCN
Center Stage Control Network

CSD
Customer Service Document

CSM
Centralized System Management

CSS
Center Stage Switch

CSSO
Customer Services Support Organization

CSU
Channel Service Unit

CTS
Clear to Send

CWC
Call Work Codes

D

DAC
Dial Access Code or Direct Agent Calling

dB
Decibel

DC
Direct Current

DCE
Data Communications Equipment

DCP
Digital Communications Protocol

DCS
Distributed Communications System

DDC
Direct Department Calling

DDD
Direct Distance Dialed

DID
Direct Inward Dialed

DIOD
Direct Inward and Outward Dialing

DIVA
Data In/Voice Answer

DLC
Data Line Circuit

DLDM
Data Line Data Module

DMI
Digital Multiplexed Interface

DND
Do Not Disturb

DNIS
Dialed Number Identification Service

DOD
Direct Outward Dialing

DOSS
Delivery Operations Support System

DOT
Duplication Option Terminal

DPM
Dial Plan Manager

DPR
Dual Port RAM

DS1
Data Services Level 1

DS1C
Digital Signal Level-1 Converter

DSI
Digital Signal Interface

DSU
Data Service Unit

DTDM
Digital Terminal Data Module

DTE
Data Terminal Equipment

DTGS
Direct Trunk Group Select

DTMF
Dual-Tone Multifrequency

DTS
Disk Tape System

DXS
Direct Extension Selection

E

E&M
Ear and Mouth (receive and transmit)

EAA
Expansion Archangel

EAL
Expansion Archangel Link

EBCDIC
Extended Binary-Coded Decimal Interexchange Code

ECC
Error Correct Code

EFP
Electronic Power Feed

EI
Expansion Interface

EIA
Electronic Industries Association

EMI
Electro-Magnetic Interference

EPN
Expansion Port Network

EPROM
Erasable Programmable Read Only Memory

EPSCS
Enhanced Private Switched Communications Services

ESF
Extended Superframe Format

ETA
Extended Trunk Access

ETN
Electronic Tandem Network

ETSI
European Telecommunications Standards Institute

F

FAC
Feature Access Code

FAS
Facility-Associated Signaling

FAT
Facility Access Trunk

FAX
Facsimile

FCC
Federal Communications Commission

FEAC
Forced Entry of Account Codes

FEP
Front End Processor

FIC
Facility Interface Codes

FNPA
Foreign Numbering-Plan Area

FRL
Facilities Restriction Level

FX
Foreign Exchange

G

G1
Generic1

G3-MA
Generic 3 Management Applications

G3-MT
Generic 3 Management Terminal

G3i
Generic 3, Intel

G3i-G
Generic 3, global

G3r
Generic 3, RISC (Reduced Instruction Set Computer)

GM
Group Manager

GPTR
General-Purpose Tone Receiver

GRS
Generalized Route Selection

H

HNPA
Home Numbering Plan Area Code

Hz
Hertz

I

IAS
Inter-PBX Attendant Service

IC
Inter-Cabinet

ICC
Intercarrier Cable

ICD
Inbound Call Director

ICDOS
International Customer Dialed Operator Serviced

ICHT
Incoming Call-Handling Table

ICI
Incoming Call Identifier

ICM
Inbound Call Management

IDDD
International Direct Distance Dialing

IDF
Intermediate Distribution Frame

IE
Information Element

IMT
Intermachine Trunk

in
Inch

INADS
Initialization and Administration System

INS
ISDN Network Service

INWATS
Inward Wide Area Telephone Service

IO
Information Outlet

ISDN
Integrated Services Digital Network

ISN
Information Systems Network

ISO
International Standards Organization

ISV
Independent Software Vendor

ITP
Installation Test Procedures

ITU
International Telecommunications Union

IXC
Interexchange Carrier Code

K

kHz
Kilohertz

kbps
Kilobits Per Second

kbyte
Kilobyte

kg
Kilogram

L

LAN
Local Area Network

LAP-D
Link Access Procedure on the D-channel

LAPD
Link Access Procedure Data

LATA
Local Access and Transport Area

lb
Pound

LDN
Listed Directory Number

LDS
Long-Distance Service

LEC
Local Exchange Carrier

LED
Light-Emitting Diode

LINL
Local Indirect Neighbor Link

LMM
Low Level Maintenance Monitor

LSU
Local Storage Unit

LWC
Leave Word Calling

M

M-Bus
Memory Bus

MA-UUI
Message Associated User-to-User Signaling

MADU
Modular Asynchronous Data Unit

MAP
Maintenance Action Process

Mbps
Megabits Per Second

Mbyte
Megabytes

MCC
Multi-Carrier Cabinet

MCS
Message Center Service

MDF
Main Distribution Frame

MDM
Modular Data Module

MDR
Message Detail Record

MEM
Memory

MET
Multibutton Electronic Telephone

MFC
Multifrequency Compelled Signaling

MHz
Megahertz

MIM
Management Information Message

MIS
Management Information System

MISCID
Miscellaneous Identification

MMS
Material Management Services

MOS
Message-Oriented Signaling

MPDM
Modular Processor Data Module

MS
Message Server

ms
Millisecond

MS/T
Main Satellite/Tributary

MSA
Message Servicing Adjunct

MSG
Message Service

MSM
Modular System Management

MSS
Mass Storage System

MSSNET
Mass Storage/Network Control

MT
Management Terminal

MTDM
Modular Trunk Data Module

MTP
Maintenance Tape Processor

MTT
Multi-Tasking Terminal

MWL
Message Waiting Lamp

N

NANP
North American Numbering Plan

NAU
Network Access Unit

NCA/TSC
Non-Call Associate/Temporary Signaling Connection

NCOSS
Network Control Operations Support Center

NCSO
National Customer Support Organization

NEC
National Engineering Center

NEMA
National Electrical Manufacturer's Association

NFAS
Non-Facility Associated Signaling

NID
Network Inward Dialing

NM
Network Management

NN
National Number

NPA
Numbering Plan Area

NPE
Network Processing Element

NQC
Number of Queued Calls

NSE
Night Service Extension

NSU
Network Sharing Unit

NXX
Public Network Office Code

O

OA
Operator Assisted

OCM
Outbound Call Management

ONS
On-Premises Station

OPS
Off-Premises Station

OQT
Oldest Queued Time

OSHA
Occupational Safety and Health Act

OSI
Open Systems Interconnect

OSS
Operations Support System

OSSI
Operations Support System Interface

OTQ
Outgoing Trunk Queuing

P

PACCON
Packet Control

PAD
Packet Assembly/Disassembly

PBX
Private Branch Exchange

PC
Personal Computer

PCM
Pulse Code Modulated

PCOL
Personal Central Office Line

PCOLG
Personal Central Office Line Group

PCS
Permanent Switched Calls

PDM
Processor Data Module

PDS
Premises Distribution System

PE
Processing Element

PEC
Price Element Codes

PEI
Processor Element Interchange

PGATE
Packet Gateway

PGN
Partitioned Group Number

PI
Processor Interface

PIB
Processor Interface Board

PIDB
Product Image Database

PKTINT
Packet Interface

PL
Private Line

PLS
Premises Lightwave System

PMS
Property Management System

PN
Port Network

PNA
Private Network Access

POP
Point Of Presence

PPN
Processor Port Network

PRI
Primary Rate Interface

PROCR
Processor

PSC
Premises Service Consultant

PSDN
Packet Switch Public Data Network

PT
Personal Terminal

PTC
Positive Temperature Coefficient

PTT
Postal Telephone and Telegraph

R

R2-MFC
R2 Multifrequency Compelled Signaling

RAM
Random Access Memory

RBS
Robbed-Bit Signaling

RCL
Restricted Call List

RHNPA
Remote Home Numbering Plan Area

RINL
Remote Indirect Neighbor Link

RISC
Reduced Instruction Set Computer

RLT
Release Link Trunk

RMATS
Remote Maintenance, Administration, and Traffic System

RNX
Route Number Index (Private Network Office Code)

ROM
Read-Only Memory

RPN
Routing Plan Number

RS232C
Recommended Standard 232C

RS449
Recommended Standard 449

RSC
Regional Support Center

S

SABM
Set Asynchronous Balance Mode

SAKI
Sanity and Control Interface

SAT
System Access Terminal

SCC
Single Carrier Cabinet

SCD
Switch-Control Driver

SCI
Switch Communications Interface

SCO
System Control Office

SCOTCH
Switch Conferencing for TDM Bus in Concentration Highway

SCSI
Small Computer System Interface

SDDN
Software Defined Data Network

SDI
Switched Digital International

SDLC
Synchronous Data Link Control

SDN
Software Defined Network

SID
Station Identification Number

SIT
Special Information Tones

SMDR
Station Message Detail Recording

SMM
Standby Maintenance Monitor

SN
Switch Node

SNA
Systems Network Architecture

SNC
Switch Node Clock

SNI
Switch Node Interface

SPE
Switch Processing Element

SPID
Service Profile Identifier

SSI
Standard Serial Interface

SSM
Single Site Management

SSV
Station Service

ST3
Stratum 3 Clock Board

STARLAN
Star-Based Local Area Network

SVN
Security Violation Notification

SXS
Step-by-Step

SYSAM
System Access and Administration

T

TAAS
Trunk Answer from Any Station

TAC
Trunk Access Code

TC
Technical Consultant

TCM
Traveling Class Mark

TDM
Time-Division Multiplex(ing)

TDR
Time of Day Routing

TEG
Terminating Extension Group

TEI
Terminal Endpoint Identifier

TOD
Time of Day

TOP
Task Oriented Protocol

TSC
Technical Service Center

TTR
Touch-Tone Receiver

TTT
Terminating Trunk Transmission

TTTN
Tandem Tie Trunk Network

TTY
Teletypewriter

U

UAP
Usage Allocation Plan

UART
Universal Asynchronous Transmitter

UCD
Uniform Call Distribution

UCL
Unrestricted Call List

UDP
Uniform Dial Plan

UL
Underwriter Laboratories

UM
User Manager

UNMA
Unified Network Management Architecture

UNP
Uniform Numbering Plan

UPS
Uninterruptible Power Supply

USOP
User Service Order Profile

UUCP
UNIX-to-UNIX Communications Protocol

UUI
User-to-user information

V

VDN
Vector Directory Number

VIS
Voice Information System

VLSI
Very Large Scale Integration

VM
Voltmeter

VNI
Virtual Nodepoint Identifier

W

WATS
Wide Area Telecommunications Service

WCC
World Class Core

WSA
Waiting Session Accept

Z

ZCS
Zero Code Suppression

Index

Numerics

16-port analog line (ANL-16-L), A-67
16-port AUDIX circuit pack (ADX16D-B), A-17
16-port AUDIX digital port (ADX16D-P), A-19
32MB memory circuit pack (MEM-BD), M-25
4410 data terminals, 3-11, 3-136
4425 data terminals, 3-11, 3-136
513 BCTs, 3-11, 3-136
513 emulation cartridges, 3-136
610 BCTs, 3-11, 3-136
615 MT, 3-11
615 MTs, 3-136
715 BCTs, 3-131, 3-132, 3-136
    terminals
        715 BCTs, 3-11
8-port analog line (ANL-LINE, ANL-NE-L), A-91

A

AC-powered systems, A-2, P-240
adjunct-switch application interface (ASAI)
    adjunct ports, A-157
administered connection (ADM-CONN), A-12
administered temporary signaling connections (TSC-ADM), T-181
administration
    circuit packs, 7-4, U-4
    commands, 3-13
    customer logins, 3-112
    Forced Password Aging, 3-112
    login command permissions, 3-115
    logins, 3-114
    super-users, 3-114
    user access, 3-12
air filters, 6-18, 6-20
alarm logs, 1-3, E-10
alarm port (ALARM-PT), A-60
alarms
    categories, 7-1
    classifications, 1-3
    external leads, 1-20
    levels, 7-1
    logs, 1-3, E-10
    maintenance objects (MOs), 1-2
    spontaneous interchanges, 5-13
    Terminal Alarm Notification, 7-2
    warning, 7-1
analog CO trunk (CO-TRK), C-65
analog line circuit pack (ANL-BD), A-90
analog ring generator (RING-GEN), R-1
analog tie trunk (TIE-TRK), T-117
announcement circuit pack (ANN-BD), A-116
announcement port (ANN-PT), A-139
application-specific documentation, AA-7
ASAI ISDN-BRI port (ABRI-PORT), A-1, B-12
ATMS, see Automatic Transmission Measurement System
attendant console, LEDs, 7-2
audits (tests), see tests and audits
AUDIX analog line/control link (ADXCL-PT), A-33
AUDIX circuit pack (ADXCL-BD), A-18
AUDIX circuit pack (ADXDP-BD), A-45
AUDIX circuit pack (AUDIX-BD), A-158
AUDIX digital port (ADXDP-PT), A-46
AUDIX port (AUDIX-PT), A-159
Automatic Transmission Measurement System (ATMS), 6-30
auxiliary error codes, 5-14
auxiliary trunk (AUX-TRK), A-161
auxiliary trunk circuit pack (AUX-BD), A-160

B

backup disk command, 8-45
batteries, preventative maintenance, 6-19
bulletin boards, 3-17
busyout access-endpoint command, 8-46
busyout board command, 8-47
busyout cdr-link command, 8-48
busyout commands, 8-10
busyout disk command, 8-49
busyout fiber-link command, 8-51
busyout host-adapter command, 8-52
busyout journal-printer command, 8-53
busyout link command, 8-54
busyout MIS command, 8-54
busyout modem-pool command, 8-55
busyout pms-link command, 8-55
busyout pnc-standby command, 8-56
busyout port command, 8-57
busyout pri-endpoint command, 8-57
busyout spe-standby command, 8-58
busyout sp-link command, 8-59
busyout station command, 8-59
busyout tape command, 8-60
busyout tdm command, 8-60
busyout tone-clock command, 8-61
busyout trunk command, 8-62

C

cabinet sensors (CABINET), C-1
cabling
    DS1 connectors, 5-24
    DS1C, 2-28
    fiber optic, 2-26

metallic, 2-28
Call Center documentation, AA-5
call classifier circuit pack (CLSFY-BD), C-42
call classifier port (CLSFY-PT), C-43
Call Detail Recording (CDR), C-41, P-254
Call Detail Recording link (CDR-LINK), C-41
Call Detail Recording link (PRI-CDR/SEC-CDR), P-254
call-dropping updates, 6-3
call-preserving updates, 6-3
cancel hardware-group command, 8-62
carrier power supply (CARR-POW), C-17
carriers
multicarrier cabinets, 2-5
single-carrier cabinets, 2-3, 2-21
central office trunk circuit pack (CO-BD), C-50
change fiber-link command, 8-67
change synchronization command, 8-72
change system-parameters maintenance command, 8-74
circuit packs
administration, 7-4, U-4
combined tone/generators, E-11
DS1C, 5-6
DS1C LEDs, 7-10
duplication interface LEDs, 7-8
electrostatic discharge (ESD), 5-2
expansion interface (EI), E-27
expansion interface (IE) LEDs, 7-5
expansion port networks (EPNs), 7-6
expansion port networks (EPNs) maintenance, 3-132
Generic 3r, 2-31
green LEDs, 7-3
hyperactive, P-3
LEDs, 7-3
maintenance LEDs, 7-6
miantenance/test LEDs, 7-14
packet bus failures, 5-42
red LEDs, 7-3
replacing, 5-6
requiring special procedures, 5-6
switch processing elements (SPEs), 1-8, 5-8
SYSAM, 7-15
system access-maintenance (SYSAM), 7-6
TN1648, 5-6
TN1650B, 5-6
TN1655, 5-6
TN1656, 5-6
TN1657, 5-6
TN2182, T-148
TN464, D-149
TN570, 7-5, E-18
TN572, 5-6
TN573, 5-6
TN722, D-149
TN750, 5-6
TN767, D-149
TN768, T-78, T-148, T-168
TN775, E-27
TN780, T-78, T-148
TONE-BD, tone-clock, T-148
tone-clock, E-27, T-148
tone-clock LEDs, 7-13
typical, 5-7
UN330B, 5-6
UN332, 5-6
universal DS1 (UDS1) interface, D-149, U-1
using the packet bus, 5-40
yellow LEDs, 7-3
clear errors command, 8-83
clear firmware-counters command, 8-83
clear isdn-testcall group# /member# command, 8-84
clear link link# command, 8-84
clear pgate-port UUCSSpp command, 8-85
clear pkt port-network PN# command, 8-85
clear port UUCSSpp command, 8-85
clocks, system, T-78, T-148
cold restarts, 4-3, 4-5
combined tone generator/detectors, circuit packs, E-11
command interfaces, SPE-down, 4-8
command lines, 3-137
description, 3-137
syntax, 8-2
Command Permissions Categories form, 3-115
commands
administration, 3-13, 3-18
backup disk, 8-45
busyout, 8-10
busyout access-endpoint, 8-46
busyout board, 8-47
busyout cdr-link, 8-48
busyout disk, 8-49
busyout fiber-link, 8-51
busyout host-adapter, 8-52
busyout journal-printer, 8-53
busyout link, 8-54
busyout MIS, 8-54
busyout modem-pool, 8-55
busyout pms-link, 8-55
busyout pnc-standby, 8-56
busyout port, 8-57
busyout pri-endpoint, 8-57
busyout spe-standby, 8-58
busyout sp-link, 8-59
busyout station, 8-59
busyout tape, 8-60
busyout tdm, 8-60
busyout tone-clock, 8-61
busyout trunk, 8-62
cancel hardware-group, 8-62
categories, 3-13, 3-18
change circuit packs UU, 8-63
change circuit-packs UU, 8-63
change fiber-link, 8-67
change synchronization, 8-72
change system-parameters maintenance, 8-74
clear errors, 8-83
clear firmware-counters, 8-83
clear isdn-testcall group# /member#, 8-84
clear link link#, 8-84

clear pgate-port UUCSSpp, 8-85
clear pkt port-network PN#, 8-85
clear port UUCSSpp, 8-85
common, 3-13, 3-18
definition, 3-137
disable administered-connection, 8-86
disable synchronization-switch, 8-86
display alarms, 4-13, 8-16
display errors, 8-16
display events, 8-87
display fiber-link, 8-89
display initcauses, 8-89
display port, 8-92
display synchronization, 8-92
display system-parameters maintenance, 8-93
display time, 8-100
enable administered-connection, 8-101
enable synchronization-switch, 8-101
enable test-number test#, 8-101
error messages, 8-1
G3V3 categories, 3-134
G3V3/G3V4 categories, 3-13
get vector, 8-102
list cabinet, 8-105
list configuration, 8-106
list configuration software-version, 8-109
list disabled-MOs, 8-116
list fiber-link, 8-117
list history, 8-118
list isdn-testcall, 8-121
list marked-ports, 8-123
list measurements ds1, 8-123
list pms-down, 8-128
list sys-link, 8-129
list testcalls, 8-131
maintenance, 3-13, 3-18, 8-1
mark port, 8-132
monitor bcms, 8-132
monitor health, 8-137
monitor security-violations, 8-137
monitor system, 8-139
monitor traffic, 8-142
monitor trunk, 8-144
output fields, 8-5
reboots, 4-14
recycle carrier, 8-145
release, 8-10, 8-145
release board, 8-145
release maintenance-name, 8-145
reset board, 8-147
reset disk, 8-147
reset fiber-link, 8-148
reset host-adapter, 8-148
reset maintenance, 8-149
reset packet-interface, 8-149
reset pnc interchange, 8-151
reset pnc intrechange, 5-61
reset port-network, 8-155
reset spe-standby, 8-156
reset system, 8-157
reset system interchange, 5-61, 8-160
reset tape, 8-162
restore announcements, 8-163
restore disk, 8-165
resume hardware-group, 8-62, 8-167
save announcements, 8-167
save translations, 8-171
set pnc, 8-174
set signaling group, 8-174
set snc, 8-175
set synchronization, 8-175
set tdm, 8-176
set time, 8-177
set tone-clock, 5-61, 8-178
set vector, 8-178
SPE-down interface, 4-12
status, 5-56
status access-endpoint, 8-182
status administered-connection, 8-183
status attendant, 8-186
status bri-port, 8-187
status cabinet, 8-198
status cdr-link, 8-201
status data-module, 8-202
status hardware-group, 8-203
status health, 8-205
status isdn-testcall, 8-210
status journal-link, 8-212
status link, 8-213
status logins, 8-222
status packet-interface, 8-224
status periodic-scheduled, 8-225
status pgate-port, 8-227
status pms-link, 8-227
status pnc, 8-229
status port-network, 5-60, 8-233
status pri-endpoint, 8-237
status processor-channel, 8-239
status signaling-group group, 8-240
status spe, 8-243
status sp-link, 8-247
status station, 8-248
status switch-node, 8-250
status synchronization, 8-252
status sys-link, 8-253
status trunk, 8-257
status tsc-administered, 8-259
status tti, 8-261
test access-endpoint, 8-263
test alarms, 8-264
test analog-testcall, 8-269
test board, 8-269
test cdr-link, 8-270
test customer-alarm, 8-270
test data-module, 8-271
test disk, 8-271

test ds1-facility, 8-271
test ds1-loop, 8-272
test duplication-interface, 8-276
test eda-external-device-alrm, 8-278
test environment, 8-281
test fiber-link, 8-283
test hardware-group, 8-62, 8-284
test host-adapter, 8-291
test inads-link, 8-291
test isdn-testcall, 8-291
test journal-printer, 8-292
test led, 8-293
test link, 8-293
test maintenance, 8-294
test mass-storage, 8-295
test memory, 8-296
test modem-pool, 8-297
test mssnet, 8-298
test packet-interface, 8-299
test pkt, 8-300
test pms-link, 8-300
test port, 8-300
test pri-endpoint, 8-300
test processor, 8-301
test signaling-group, 8-301
test spe-standby, 8-302
test sp-link, 8-304
test station, 8-305
test stored-data, 8-305
test switch-control, 8-306
test synchronization, 8-306
test sys-link, 8-307
test tape, 8-308
test tdm, 8-309
test tone/clock, 8-309
test trunk, 8-309
test tsc-administered, 8-309
testing, 4-13
upgrade software, 8-309
common commands, 3-13
common port circuit pack (XXX-BD), X-1
companding, E-11, T-151
connecting/connectivity
G3-MT, 3-131
ISDN-BRI/packet bus, 5-29
management terminal to system, 3-131
packet bus, 5-39
country codes, T-151
customer-provided alarming device (CUST-ALM), C-103

D

data line circuit pack (DT-LN-BD), D-278
data line port (DAT-LINE), D-1
DC-powered systems, A-7, P-250
DEC VT220, 3-136
DEC VT220 terminals, 3-11
digital line (DIG-LINE), D-56
digital line circuit pack (DIG-BD), D-55
DIOD trunk (DIOD-TRK), D-92
DIOD trunk circuit pack (DIOD-BD), D-91
Direct Inward Dial trunk (DID TRK), D-34
Direct Inward Dial trunk (DID-DS1), D-24
Direct Inward Dial trunk circuit pack (DID-BD), D-23
disable administered-connection command, 8-86
disable synchronization-switch command, 8-86
display alarms command, 4-13
display alarms commands, 8-16
display errors commands, 8-16
display events command, 8-87
display fiber-link command, 8-89
display initcauses command, 8-89
display port command, 8-92
display synchronization command, 8-92
display system-parameters maintenance command, 8-93
display time command, 8-100
documentation
application specific, AA-7
Call Center specific, AA-5
DEFINITY, basic, AA-1
network specific, AA-6
DS0 channels, U-1
DS1
cable connectors, 5-24
CO trunk (CO-DS1), C-51
converter (DS1C-BD), D-248
convertor complex, E-24
facility (DS1-FAC), D-223
facility LEDs, 7-11
interface circuit pack (DS1-BD), D-149
interface circuit packs, D-149, U-1
ISDN trunk (ISDN-TRK), I-33
off premises station line (OPS-LINE), O-1
off-premises station (OPS), O-1
option jumpers, U-4
signaling, D-149
tie trunk (TIE-DS1), T-100
trunks, U-1
DS1C
cabling, 2-28
circuit pack LEDs, 7-10
circuit packs, 5-6
loopbacks, 5-23
DSO Loop-Around Test Call, 6-11
DTMR Test Call, 6-12
dual tone multi-frequency receiver port (DTMR-PT), D-279
duplicated PNC, F-4
duplicated PNCs, E-21
duplicated SPEs, 4-15, 6-3, 7-8
duplication
reliability options, 2-40
tone-clocks, T-148
duplication interface (DUP-CHL), D-285
duplication interface circuit pack (DUPINT), D-330

E

EIA RS-232C, P-1
electrostatic discharge (ESD), circuit packs, 5-2
Emergency Transfer, 5-8
Emergency Transfer (EMG-XFER), E-1
Emergency Transfer (ET), E-1
enable administered-connection command, 8-101
enable synchronization-switch command, 8-101
enable test-number test# command, 8-101
enhanced integrated CSU, U-3
enhanced tone receiver (ETR) ports, E-11
enhanced tone receiver port (ETR-PT), E-11, T-148
EPN Sanity Audit, E-8
EPN Sanity Audit (EPN-SNTY), E-8
EPN, see expansion port networks (EPNs)
error log (ERR-LOG), E-10
error logs, E-10
    entries for slip errors, E-41
    hardware, 1-3
    spontaneous interchanges, 5-13
error type 1, P-2
errors
    605, 5-17
    codes, auxiliary, 5-14
    codes, busyout commands, 8-11
    codes, release commands, 8-11
    codes, reset commands, 8-11
    codes, test commands, 8-11
    messages, commands, 8-1
    reporting, maintenance objects (MOs), 1-2
ESD, See electrostatic discharge
expansion control cabinet (J58890N), 2-21
expansion control carrier (J58890AF), 2-12
expansion interface (EI)
    circuit packs, E-27
    fiber links, viability, E-27
    TN570 circuit packs, 7-5, E-18
    tone-clock interactions, E-27
expansion interface circuit pack (EXP-INTF), E-18
expansion port network (EXP-PN), E-89
expansion port networks (EPNs), E-27
    maintenance circuit packs, 3-132, 7-6
    multicarrier cabinets, 2-3
    Sanity Audit feature, E-8
    single-carrier cabinets, 2-3
    troubleshooting packet bus, 5-68
external device alarm (EXT DEV ADMIN), E-102
external device alarm (EXT-DEV), E-96

F

Facility Test Calls, 6-10
fiber administration, 2-26
fiber connections, metallic cabling, 2-28
fiber fault isolation procedure, 5-19
fiber hardware, 2-26
fiber link (FIBER-LK), F-1
fiber links, DS1 converter complex, E-24, F-1
fiber optic cables, 2-26
FIFO overflow, P-3
Forced Password Aging, 3-17, 3-112
function keys, 3-137

G

G3-MA terminals, 3-11
G3-MT terminals
    connecting, 3-131
    description, 3-11
    keyboard definitions, 3-137
G3V3 commands, 3-134
G3V3/G3V4 commands, 3-13
general purpose tone detector port (GPTD-PT), G-1
Generic 3 management terminal (G3-MT), 3-11
get vector command, 8-102
grounding jacks, 5-2

H

handshake communication
    definition, 1-13
    path, 1-14
hot restarts, 4-2
hybrid line (HYB-LINE), H-31
hybrid line circuit pack (HYB-BD), H-30
hyperactive circuit packs, P-3

I

INADS link (INADS), I-1
INADS, see Initialization and Administration System (INADS)
initialization
    and recovery, 4-1
    diagnostics, 4-6
    diagnostics for reset levels, 4-7
    reboots, 4-1
    standby switch processing elements (SPEs), 1-13
Initialization and Administration System (INADS)
    alarm notification, 5-1
    alarms, 1-3
    maintenance objects (MOs), I-1
interchanges, tone-clocks, T-149
ISDN-BRI data module (BRI-DAT), B-11
ISDN-BRI line circuit pack (BRI-BD), B-1
ISDN-BRI port (BRI-PORT), B-12

ISDN-BRI/ASAI, troubleshooting, 5-29
ISDN-PRI
  DS0 channels, U-1
  signaling group (ISDN-SGR), I-14
  signaling link port (ISDN-LNK), I-5
  troubleshooting, 5-24

J

journal printer link (JNL-PRNT), J-1
journal printers
  command permissions, 3-121

K

keyboard definitions, 3-137

L

LEDs
  attendant consoles, 7-2
  circuit packs, 7-3
  DS1 facility, 7-11
  DS1C circuit packs, 7-10
  electrostatic discharge (ESD), 5-2
  expansion interface (IE) circuit packs, 7-5
  indicators, 7-1
  interface circuit packs, 7-8
  maintenance circuit packs, 7-6
  maintenance/test circuit packs, 7-14
  standby components, 7-15
  switch node interface, 7-9
  TN573 circuit packs, 7-9
  tone-clock circuit packs, 7-13
  yellow, 7-14
list cabinet command, 8-105
list configuration command, 8-106
list configuration software-version command, 8-109
list disabled-MOs command, 8-116
list fiber-link command, 8-117
list history command, 8-118
list isdn-testcall command, 8-121
list marked-ports command, 8-123
list measurements ds1 command, 8-123
list pms-down command, 8-128
list sys-link command, 8-129
list testcalls command, 8-131
logging in, 3-17, 3-19, 3-135
logging off, 3-19, 3-136
login administration, 3-114
Login Administration screen, 3-114
Login Kill after "N" Attempts, 3-12, 3-134
Login Security Violation Notification Following a Security Violation, 3-12, 3-134
logins, 3-17
  adding, 3-112
  administrable, 3-17
  changing attributes, 3-114
  displaying, 3-110
  listing, 3-111
  maintenance, 3-13
  removing, 3-111
  security, 3-12, 3-133
  testing, 3-111
Logoff Notification (G3V4), 3-12, 3-134, 3-137
Logoff screen, 3-110
loopback tests
  fiber fault isolation procedure, 5-22
loopbacks
  DS1C, 5-23
  DS1C tests, 5-23

M

maintenance
  circuit pack LEDs, 7-6
  commands, 3-13, 8-1
  common port circuit pack, X-1
  logins, 3-13
  packet bus, 5-44
  preventative, 6-18
  standby components, 1-14
  test circuit pack LEDs, 7-14
  user access, 3-12
  wideband access endpoint port, W-2
maintenance object repair procedures
  ABRI-PORT (ASAI ISDN-BRI Port), A-1
  AC-POWER for AC-Powered Systems, A-2
  ADM-CONN (Administered Connection), A-12
  ADX16D-B (16 Port AUDIX Circuit Pack), A-17
  ADX16D-P (16-Port AUDIX Digital Port), A-19
  ADXCL-BD (AUDIX Circuit Pack), A-18
  ADXCL-PT (AUDIX Analog Line/Control Link), A-33
  ADXDP-BD (AUDIX Circuit Pack), A-45
  ADXDP-PT (AUDIX Digital Port), A-46
  ALARM-PT (ALARM PORT), A-60
  ANL-16-L (16-Port Analog Line), A-67
  ANL-BD (Analog Line Circuit Pack), A-90
  ANL-LINE, ANL-NE-L (8-Port Analog Line), A-91
  ANN-BD (Announcement Circuit Pack), A-116
  ANNOUNCE, A-152
  ANN-PT (Announcement Port), A-139
  ASAI-ADJ (Adjunct-Switch Application Interface), A-157
  AUDIX-BD (AUDIX Circuit Pack), A-158
  AUDIX-PT (AUDIX Port), A-159
  AUX-BD (Auxiliary Trunk Circuit Pack), A-160
  AUX-TRK (Auxiliary Trunk), A-161
  BRI-BD (ISDN-BRI Line Circuit Pack), B-1

BRI-DAT (ISDN-BRI Data Module), B-11
BRI-PORT (ISDN-BRI Port), ABRI-PORT (ASAI ISDN-BRI Port), B-12
BRI-SET, ASAI-ADJ, BRI-DAT, B-44
CABINET (Cabinet Sensors), C-1
CARR-POW (Carrier Power Supply), C-17
CDR-LNK (Call Detail Recording Link), C-41
CLSFY-BD (Call Classifier Circuit Pack), C-42
CLSFY-PT (Call Classifier Port), C-43
CO-BD (Central Office Trunk Circuit Pack), C-50
CO-DS1 (DS1 CO Trunk), C-51
CONFIG (System Configuration), C-95
CO-TRK (Analog CO Trunk), C-65
CUST-ALM (Customer-Provided Alarming Device), C-103
DAT-LINE (Data Line Port), D-1
DC-POWER (Single Carrier Cabinet Environment), D-16
DETR-BD (Tone Detector Circuit), D-22
DID-BD (Direct Inward Dial Trunk Circuit Pack, D-23
DID-TRK (Direct Inward Dial Trunk), D-34
DIG-BD (Digital Line Circuit Pack), D-55
DIG-LINE (Digital Line), D-56
DIOD-BD (DIOD Trunk Circuit Pack), D-91
DIOD-TRK (DIOD Trunk), D-92
DISK (MSS Disk Circuit Pack), D-107
DS1-BD (DS1 Interface Circuit Pack), D-149
DS1C-BD (DS1 Converter), D-248
DS1-FAC (DS1 Facility), D-223
DT-LN-BD (Data Line Circuit Pack), D-278
DTMR-PT (Dual Tone Multi-Frequency Receiver Port), D-279
DUP-CHL (Duplication Interface), D-285
DUPINT (Duplication Interface Circuit Pack), D-330
EMG-XFER (Emergency Transfer), E-1
EPN-SNTY (EPN Sanity Audit), E-8
ERR-LOG (Error Log), E-10
ETR-PT (Enhanced Tone Receiver Port), E-11
EXP-INTF (Expansion Interface Circuit Pack), E-18
EXP-PN (Expansion Port Network), E-89
EXT-DEV ADMIN? N (External Device Alarm), E-96
EXT-DEV ADMIN? Y (External Device Alarm), E-102
FIBER-LK, F-1
FIBER-LK (Fiber Link), F-1
GPTD-PT, G-1
H-ADAPTR (MSS Host Adapter), H-1
HYB-BD (Hybrid Line Circuit Pack), H-30
HYB-LINE (Hybrid Line), H-31
INADS (INADS Link), I-1
ISDN-LNK (ISDN-PRI Signaling Link Port), I-5
ISDN-SGR (ISDN-PRI Signaling Group), I-14
ISDN-TRK (DS1 ISDN Trunk), I-33
JNL-PRNT (Journal Printer Link), J-1
LOG-SVN, L-1
M/T-ANL (Maintenance/Test Analog Port), M-96
M/T-BD (Maintenance/Test Circuit Pack), M-109
M/T-DIG (Maintenance/Test Digital Port), M-113
M/T-PKT (Maintenance/Test Packet Bus Port), M-128
MAINT (EPN Maintenance Circuit Pack), M-1
MEM-BD (32MB Memory Circuit Pack), M-25
MET-BD (MET Line Circuit Pack), M-45
MET-LINE (MET Line), M-46
MIS (Management Information System), M-70
MODEM-BD (Modem Pool Circuit Pack), M-72
MODEM-PT (Modem Pool Port), M-73
OPS-LINE (Off Premises Station Line), O-1
PDATA-PT (Packet Data Line Port), P-8
PDMODULE (Processor Data Module) TDMODULE (Trunk Data Module), P-29
PE-BCHL (PRI Endpoint Port), P-55
PGATE-BD (Packet Gateway Circuit Pack), P-77
PGATE-PT (Packet Gateway Port), P-99
PKT-BUS (Packet Bus), P-139
PKT-INT (Packet Interface Circuit Pack), P-150
PMS-LINK (Property Management System Link), P-205
PMS-PRNT/JNL-PRNT (PMS Printer Link), P-214
PNC-DUP (PNC Duplication), P-221
POWER (Battery & Battery Charger) for AC-Powered Systems, P-240
POWER (Battery & Battery Charger) for DC-Powered Systems, P-250
PRI-CDR/SEC-CDR (Call Detail Recording Link), P-254
PROCR (RISC Processor Circuit Pack), P-263
PROC-SAN (Process Sanity Audits), P-261
RING-GEN (Analog Ring Generator), R-1
SNC-LINK (Switch Node Clock Link), S-81
SN-CONF (Switch Node Configuration), S-22
SNC-REF (Switch Node Clock Reference), S-87
SNI-BD (SNI Circuit Pack), S-91
SNI-PEER (SNI Peer Link), S-171
SPE-SELE (SPE Select Switch), S-177
S-SYN-BD (Speech Synthesis Circuit Pack), S-1
S-SYN-PT (Speech Synthesis Port), S-2
STBY-SPE (Standby SPE Maintenance), S-180
STO-DATA (Stored Data), S-208
STRAT-3 (Stratum 3 Clock), S-236
SVC-SLOT (Service Slot), S-252
SW-CTL (Switch Control), S-254
SYNC (Synchronization), S-274
SYSAM (Circuit Pack), S-317
SYS-LINK (System Links), S-304
SYS-PRNT (System Printer), S-310
SYSTEM (System), S-347
TAPE, T-1
TDM-BUS (TDM Bus), T-58
TDM-CLK (TDM Bus Clock), T-78
TDMODULE (Trunk Data Module), T-98
TIE-BD (Tie Trunk Circuit Pack), T-99
TIE-DS1 (DS1 Tie Trunk), T-100
TIE-TRK (Analog Tie Trunk), T-117
TIME-DAY (Time of Day), T-146
TONE-BD (Tone-Clock Circuit Pack), T-148
TONE-PT (Tone Generator), T-168
TSC-ADM (Administered Temporary Signaling Connections), T-181
TTR-LEV (TTR Level), T-190
UDS1-BD (UDS1 Interface Circuit Pack), U-1

WAE-PORT (Wideband Access Endpoint Port), W-1
XXX-BD (Common Port Circuit Pack, X-1
maintenance objects (MOs)
alarms, 1-2
circuit pack codes, 1-8
circuit pack names, 1-8
definition, 1-1
display alarms commands, 8-16
display errors commands, 8-16
error conditions, 1-2
INADS, I-1
SPE circuit packs, 1-8
maintenance/test analog port (M/T-ANL), M-96
maintenance/test circuit pack (M/T-BD), M-109
maintenance/test digital port, M-113
maintenance/test packet bus port (M/T-PKT), M-128
major alarms, 7-1
management information system (MIS), M-70
management terminals
connecting to system, 3-131
Generic 3, 3-11
mark port command, 8-132
mass storage system (MSS), T-3, T-49
memory shadowing, switch processing elements (SPEs), 1-13
MET line (MET-LINE), M-46
MET line circuit pack (MET-BD), M-45
metallic cabling, 2-28, 2-41
minor alarms, 7-1
MO, see maintenance objects (MOs), 1-4
modem pool circuit pack (MODEM-BD), M-72
modem pool port (MODEM-PT), M-73
modem pools, M-72, M-73
monitor bcms command, 8-132
monitor health command, 8-137
monitor security-violations command, 8-137
monitor system command, 8-139
monitor traffic command, 8-142
monitor trunk command, 8-144
MSS disk circuit pack (DISK), D-107
MSS host adapter (H-ADAPTR), H-1
multicarrier cabinets
(J58890A), 2-1
carriers, 2-5
expansion port networks (EPNs), 2-3

N

network-specific documentation, AA-6

O

off-premises station (OPS), O-1
option jumpers
TN464, U-4
universal DS1 (UDS1) interface circuit packs, U-4

P

packet bus
circuit pack failures, 5-42
circuit packs, 5-40
connectivity, 5-39
correcting faults, 5-60
definition, 5-38
duplicated systems, 5-61
fault detection, M-128
faults, 5-39
ISDN-BRI connectivity, 5-29
maintenance, 5-44
reconfiguration, M-128
repair, 5-36
reset pnc interchange, 5-61
reset system interchange, 5-61
set tone-clock, 5-61
TDM bus comparison, 5-44
troubleshooting, 5-57, 5-61
packet bus (PKT-BUS), P-139
packet data line circuit pack (PDATA-BD), P-1
packet data line port (PDATA-PT), P-8
packet gateway circuit pack (PGATE-BD), P-77
packet gateway port (PGATE-PT), P-99
packet interface circuit pack (PKT-INT), P-150
Password Aging, 3-17
Password Expiration screen, 3-19
passwords, 3-17
assigning, 3-112
security, 3-12, 3-133
PDATA-PT, P-1
PGATE, P-123
PMS printer link (PMS-PRNT/JN), P-214
PNC duplication (PNC-DUP), P-221
pocessor data module (PDMODULE), P-29
port cabinet (J58890H), 2-24
port carrier (J58890BB), 2-9
port network connectivity (PNC)
configurations, 1-5
definition, 1-4
power
distribution units, 6-19
removing, 6-28
restoring, 6-28
power interruptions, 1-18
PPN, see processor port networks (PPNs)
precautions, safety, lxi
preventative maintenance, 6-18
air filters, 6-18
batteries, 6-19
logs, 6-18
procedures, 6-18

tape drives, 6-19
PRI endpoint port (PE-BCHL), P-55
printers
715 BCTs, 3-133
connections, 3-11
journal, 3-121
procedures
fiber fault isolation, 5-19
SNI/EI manual loop back, 5-21
process sanity audits (PROC-SAN), P-261
processor port networks (PPNs)
cabinets, 2-2
control carriers (J58890AP), 2-5
troubleshooting packet bus, 5-68
property management system (PMS), P-205, P-214
property management system link (PMS-LINK), P-205

R

R2-MFC signaling, E-11
reboots
commands, 4-14
initialization, 4-1
reset level 4, 4-5
reset level 5, 4-6
switch processing elements (SPEs), 4-15
recycle carrier command, 8-145
references, AA-1
release board command, 8-145
release commands, 8-10, 8-145
release maintenance-name command, 8-145
reliability options
critical, 2-41
duplication, 2-40
high, 2-40
standard, 2-40
Remote Access, 3-113
replacement procedures, tone-cock circuit packs, T-152
reset board command, 8-147
reset disk command, 8-147
reset fiber-link command, 8-148
reset host-adapter command, 8-148
reset levels
1 (warm restarts), 4-3
2 (cold-2 restarts), 4-3
3 (cold-1 restarts), 4-5
4 (reboots), 4-5
5 (extended reboots), 4-6
initialization diagnostics, 4-7
reboots, 4-1
reset maintenance command, 8-149
reset packet-interface command, 8-149
reset pnc interchange command, 5-61, 8-151
reset port-network command, 8-155
reset spe-standby command, 8-156
reset system command, 8-157
reset system interchange command, 5-61, 8-160
reset tape command, 8-162
restore announcements command, 8-163
restore disk command, 8-165
resume hardware-group command, 8-62, 8-167
RISC processor circuit pack (PROCR), P-263
RS-232C, P-1

S

safety precautions, lxi, 5-1
sanity audits, P-261
save announcements command, 8-167
save translations command, 8-171
security
logins, 3-12, 3-133
password, 3-12
passwords, 3-133
service slot (SVC-SLOT), S-252
set pnc command, 8-174
set signaling-group command, 8-174
set snc command, 8-175
set synchronization command, 8-175
set tdm command, 8-176
set time command, 8-177
set tone-clock command, 5-61, 8-178
set vector command, 8-178
simplex PNC, F-3
simplex SPEs, 4-15, 6-2
single carrier cabinet environment (DC-POWER), D-16
single-carrier cabinets
carriers, 2-3, 2-21
expansion port networks (EPNs), 2-3
SNI circuit pack (SNI-BD), S-91
SNI peer link (SNI-PEER), S-171
SNI, see switch node interface (SNI)
SNI/EI manual loop back procedure, 5-21
software
standby maintenance monitor (SMM), 1-13
updates, duplicated SPEs, 6-8
updates, simplex SPEs, 6-5
version numbers, 6-1
SPE interchange, 4-2
SPE locked standby interface, 4-9
SPE select switch (SPE-SELE), S-177
SPE, see switch processing elements (SPEs)
SPE-down
command interface, 4-8
interface, 4-11
interface commands, 4-12
mode, 4-9
speech synthesis circuit pack (S-SYN-BD), S-1
speech synthesis port (S-SYN-PT), S-2
spontaneous interchanges, 5-11, 5-12
standby components
LEDs, 7-15

standby maintenance monitor (SMM) software, 1-13
standby SPE
  availability, 1-9
  down interface, 4-9
  initialization, 1-13
  maintenance architecture, 1-11
  state of health, 1-11
standby SPE maintenance (STBY-SPE), S-180
status access-endpoint command, 8-182
status administered-connection command, 8-183
status attendant command, 8-186
status bri-port command, 8-187
status cabinet command, 8-198
status cdr-link command, 8-201
status commands, 5-56
status commands, diagnosing ISDN-BRI problems, 5-30
status data-module command, 8-202
status hardware-group command, 8-203
status health command, 8-205
status isdn-testcall command, 8-210
status journal-link command, 8-212
status link command, 8-213
status logins command, 8-222
status packet-interface command, 8-224
status periodic-scheduled command, 8-225
status pgate-port command, 8-227
status pms-link command, 8-227
status pnc command, 8-229
status port-network command, 5-60, 8-233
status pri-endpoint command, 8-237
status processor-channel command, 8-239
status signaling-group group command, 8-240
status spe command, 4-16, 8-243
status sp-link command, 8-247
status station command, 8-248
status switch-node command, 8-250
status synchronization command, 8-252
status sys-link command, 8-253
status trunk command, 8-257
status tsc-administered command, 8-259
status tti command, 8-261
stored data (STO-DATA), S-208
stratum 3 clock (STRAT-3), S-236
switch control (SW-CTL), S-254
switch node carrier (J58890SA), 2-15
switch node clock circuit pack (SNC-BD), S-33
switch node clock link (SNC-LINK), S-81
switch node clock reference (SNC-REF), S-87
switch node configuration (SN-CONF), S-22
switch node interface (SNI), LEDs, 7-9
switch processing elements (SPEs), 2-5
  circuit packs, 1-8, 5-8
  down interface, 4-9
  duplicated, 6-3
  duplicated, troubleshooting, 5-11
  interchange, prerequisites, 5-16
  interchanges, failures, 5-16
  locked standby, 4-10
  locked states, 1-13
  memory shadowing, 1-13
  rebooting, 4-15
  spontaneous interchanges, 5-11
  standby connection, 3-132
  standby, testing, 5-15
  upgrade software command, 6-2
Switch-Based Bulletin Board, 3-14
synchronization (SYNC), S-274
SYSAM circuit packs, 7-15
system access and maintenance (SYSAM), S-317
system access ports (SAPs, 3-131
system access-maintenance (SYSAM) circuit pack, 7-6
system configuration (CONFIG), C-95
system errors, 605, 5-17
system link (SYS-LINK), S-304
system login procedure, 3-133
system printer (SYS-PRNT), S-310
system resets, 7-4
System Tone Test Call, 6-15

T

tape drives, preventative maintenance, 6-19
TDM bus
  clocks, T-78, T-148
  packet bus comparison, 5-44
  time slots, 6-13
TDM bus (TDM-BUS), T-58
TDM bus clock (TDM-CLK), T-78
TDM Bus Time Slot Test Call, 6-12
Terminal Alarm Notification
  alarms, 7-2
  description, 7-1
terminals
  4410 data, 3-11
  4425 data, 3-11
  513 BCTs, 3-11, 3-136
  610 BCTs, 3-11, 3-131
  615 MT, 3-11
  715 BCT, 3-132
  715 BCTs, 3-136
  DEC VT220, 3-11
  G3-MA, 3-11
  G3-MT, 3-131
  system access ports (SAPs), 3-131
  system ports, 3-131
  types supported, 3-11
Terminating Trunk Transmission (TTT), 6-28
test access-endpoint command, 8-263
test alarms command, 8-264
test analog-testcall command, 8-269
test board command, 8-269
test cdr-link command, 8-270
test commands, 4-13
test customer-alarm command, 8-270
test data-module command, 8-271

test disk command, 8-271
test ds1-facility command, 8-271
test ds1-loop command, 8-272
test duplication-interface command, 8-276
test eda-external-device-alrm command, 8-278
test environment command, 8-281
test fiber-link command, 8-283
test hardware-group command, 8-62, 8-284
test host-adapter command, 8-291
test inads-link command, 8-291
test isdn-testcall command, 8-291
test journal-printer command, 8-292
test led command, 8-293
test link command, 8-293
test maintenance command, 8-294
test mass-storage command, 8-295
test memory command, 8-296
test modem-pool command, 8-297
test mssnet command, 8-298
test packet-interface command, 8-299
test pkt command, 8-300
test pms-link command, 8-300
test port command, 8-300
test pri-endpoint command, 8-300
test processor command, 8-301
test signaling-group command, 8-301
test spe-standby command, 8-302
test sp-link command, 8-304
test station command, 8-305
test stored-data command, 8-305
test switch-control command, 8-306
test synchronization command, 8-306
test sys-link command, 8-307
test tape command, 8-308
test tdm command, 8-309
test tone/clock command, 8-309
test trunk command, 8-309
test tsc-administered command, 8-309
testing
  analog tie trunk back-to-back, 6-21
  commands, 4-13
  common port circuit pack maintenance, X-1
  fiber fault isolation, 5-22
  standby SPEs, 5-15
  standby switch processing elements (SPEs), 5-15
  system technician-demanded, E-44, U-16
tests and audits
  #0 Dial Tone Test, C-75
  #11 Digital Line Electronic Power Feed Test, D-77
  #115 Customer-Provided Alarming Device Test, C-104
  #117 Analog Ring Generator Initialization Test, R-7
  #118 Analog Ring Generator Query Test, R-8
  #120 External Device Alarm Test, E-100, E-105
  #1201 Digital Terminal Remote Loop Around Test, D-68
  #1209 Board Loopback Test, D-194
  #1209 DS1 Board Loopback Test, D-194, U-57
  #1210 CSU Equipment Loopback Test, D-197, D-198, U-61
  #1211 CSU Repeater Loopback Test, D-201, D-202, U-66
  #1212 CPE Loopback Jack Test, D-206, U-70
  #1213 Far CSU Loopback Test, D-210, U-74
  #1214 One-Way Span Test, D-214, U-78
  #1215 Inject Single Bit Error Test, D-216, U-80
  #1216 End Loopback/Span Test, D-218, U-82
  #122 Cabinet Temperature Query Test, C-11
  #1227 ICSU Status LEDs Test, D-221, U-85
  #124 Emergency Transfer Query Test, E-6
  #126 OLS Recycle Test, C-32
  #127 OLS Query Test, C-34
  #13 Voice and Control Channel Local Loop Test, A-55, A-56, D-80
  #135 Customer-Provided Alarming Device Test, C-105
  #135 Internal Loop Around Test, D-167, U-22
  #136 DS1 Tie Trunk Seizure Test, T-113
  #138 Loss of Signal Alarm Inquiry Test, D-170, D-171, U-28
  #139 Blue Alarm Inquiry Test, D-179, U-37
  #139 Red Alarm Inquiry Test, D-181
  #140 Red Alarm Inquiry Test, D-180, U-38
  #141 Yellow Alarm Inquiry Test, D-182, D-183, U-42
  #142 Major Alarm Inquiry Test, D-185, U-44
  #143 Minor Alarm Inquiry Test, D-187, U-47
  #144 Slip Alarm Inquiry Test, D-189, U-50
  #145 Misframe Alarm Inquiry Test, D-191, U-53
  #146 Translation Update Test, D-193, U-56
  #148 TDM Bus Clock Circuit Status Inquiry Test, T-87
  #149 TDM Bus Clock Slip Inquiry Test, T-90
  #150 TDM Bus Clock PPM Inquiry Test, T-92
  #151 TDM Bus Clock Parameter Update Test, T-94
  #16 DIG-LINE Station Lamp Updates Test, D-85
  #161 Loop Around Test, 8-77, A-150, I-37
  #163 Speech Synthesis DTMF Receiver, S-11
  #164 Speech Synthesis DTMF Receiver Inquiry Test, S-13
  #165 Speech Synthesis DSP Tone Test, S-14
  #166 Speech Synthesis Memory Test, S-16
  #167 Speech Synthesis SSD Inquiry Test, S-18
  #168 Speech Synthesis PSS Handshake Test, S-19
  #169 Speech Synthesis Parameter Update Test, S-21
  #17 Station (Digital) Audits Test, D-88
  #171 Digital Loop Around Test, D-11
  #205 Channel Administration Memory Array (CAMA) Test, A-144
  #206 Playback Speech Memory Array (PSMA) Test, A-146
  #208 Angel-Speech Processor (SP) Handshake Test, A-125
  #209 Announcement Checksum Test, A-127
  #210 140AY Loop Around Test, A-131
  #211 Super Frame Match Inquiry, A-135
  #213 Link Tear Down Test, S-315
  #215 Link Retry Test, S-316
  #220 Neon Test, X-17
  #237 Expansion Interface Neighbor Query Test, E-45, F-14

#238 Expansion Interface Fiber Out-of-Frame Query Test, E-48, F-16
#240 Expansion Interface Local Looparound, E-50
#241 Expansion Interface 2-way Transmission Test, E-56
#242 Expansion Interface Lightwave Transceiver Looparound, E-66
#255 Signaling Link State Check Test, I-50
#256 Service State Audit Test, I-51
#257 Call State Audit Test, I-54
#258 ISDN Test Call, I-58
#294 Idle Time Slot Test on TDM Bus A or TDM Bus B, T-73
#296 Control Channel Test, T-75
#297 Digit Detection Test, T-77
#3 CO Demand Diagnostic Test, C-79
#314 DS1 CO Dial Tone Seizure Test, C-62
#316 Expansion Interface Control Channel Test, E-73
#33 Loop Around and Conference Circuit Test, C-85, D-45, T-127
#33 Loop Around and ConferenceCircuit Test, D-104
#336 Expansion Interface Reset Test, E-76
#35 Battery Feed Test, A-63
#35 Battery Feed Test Results, A-99
#35 Port Diagnostic Test, D-51
#36 Audit and Update Test, I-49, T-112, W-11
#36 Audit Update Test, A-174, D-10, T-132
#36 Port Audit and Update Test, C-61, D-33
#36 Port Audit Update Test, C-88, D-54, D-106
#36 Station Status and Translation Audits and Updates, A-80
#36 Station Status and Translation Audits and Updates Test, A-65, A-102
#40 Tone Generator Transmission Test, T-174
#41 Tone Generator Update/Audit Test, T-178
#417 Test Synchronization Test, S-303
#42 Tone Detection Verification Test, C-46, D-282, E-14, G-5
#43 Tone Detector Audit/Update Test, C-49, D-284, E-17, G-8
#46 Clock Health Inquiry Test, T-166
#47 Loop Around and Conference Test, A-107
#48 Station Present Test, A-83, A-113
#50 NPE Audit Test, X-9
#50 NPE Connection Audit Test, D-163, U-18
#51 Ringing Application Circuit Test, X-10
#52 Control Channel Loop Around Test, D-164, U-19, X-13
#53 SAKI Sanity Test, D-165, U-20, X-15
#56 Hybrid Electronic Power Feed Test, H-40
#57 Hybrid Circuit and Conference Circuit Test, H-43
#574 Board Type Check Test, T-95
#58 Hybrid Line Local Digital Loop Around Test, H-48
#589 Expansion Interface Packet Interface Test, E-82
#59 Hybrid Line Remote Digital Loop Around Test, H-50
#595 LANBIC Receive Parity Error Counter Test, B-9
#6 NPE Crosstalk Test, A-37, A-95, A-166, C-56, C-83, D-5, D-28, D-42, D-101, H-37, I-44, T-107, T-124, W-6
#60 Hybrid Line Lamp Updates Test, H-52
#604 TSC Heartbeat Inquiry Test, T-185
#61 Hybrid Line Audits Test, H-54
#617 NPE Crosstalk Test, B-21
#62 Hybrid Line Ringer Update Test, H-57
#620 Electronic Power Feed Restoral, B-31
#629 BRI Layer 3 Query, B-72
#630 BRI Set Audits, B-76
#636 Primary Signaling Link Hardware Check, I-28
#637 Remote Layer 3 Query, I-29
#639 Secondary Signaling Link Hardware Check, I-32
#643 Signaling Link Board Check, I-10
#651 Standby Reference Health Check Test, T-96
#7 Conference Circuit Test, A-75, C-59, D-8, D-31, I-47, S-9, T-110, W-9
#73 Tie Seizure Test, T-134
#747 Tie Trunk Dial Test, T-134
#755 SNI Circuit Path Test, S-108
#756 SNI Off-Board Destructive Facility Test, F-18, S-120
#757 SNI Destructive Facility Test, F-23, S-123
#759 Configuration Audit, F-27, S-127
#760 Processor Route Audit Test, S-30, S-64
#767 Packet Neighbor Link Test, S-150
#768 Fiber Link Reset Test, F-68
#777 Failure Audit, F-69, S-67, S-161
#778 SNC On-Board Test, S-70
#78 Power Query Test, A-5, A-11
#787 Reset Board, D-262
#788 Far-end DS1 Converter Board Loopback Test, D-265
#789 Far-end FOT (Lightwave Transceiver) Loopback Test, D-268
#79 Single Carrier Cabinet Power Query Test, D-20
#790 DS1 Facilities Connectivity Loopback Test, D-271
#795 Board Options Audit, D-274
#797 Far-End Internal Loopback Test, D-237
#798 DS1 Interface Options Audit, D-240
#799 Near-end External Loopback Test, D-243
#809 Disk Reset Test, D-116
#809/#894 Tape Reset Test, T-14
#810 Disk Write-Read Test, D-121
#810 Tape Write-Read Test, T-18
#811 Disk Audit Test, D-126
#811 Tape Audit Test, T-23
#812 Disk Firmware Error Counters Read and Clear Test, D-131
#812 Tape Firmware Error Counters Read and Clear Test, T-28
#813 Disk Diagnostic Test, D-135
#813 Tape Diagnostic Test, T-34
#814 Disk Loop-Around Test, D-140
#814 Tape Loop-around Test, T-39
#815 Disk Status Test, D-144
#815 Tape Status Test, T-43
#820/#893 Host Adapter Reset Test, H-8
#822 Host Adapter Read and Clear Firmware Error Counters Test, H-13
#823 Host Adapter Diagnostic Test, H-18
#824 Host Adapter Loop Around Test, H-22

#825 Host Adapter Status Test, H-25
#844-848 Transmission Test, C-89, T-140
#855 Standby SPE Status Query Test, S-198
#858 Standby SPE Time-of-Day Comparison Test, S-202
#865 Control Register Test, D-336
#866 Mailbox Loop-around Test, D-337
#867 Local Loop-around Test, D-339
#868 Memory Shadowing Bounds Test, D-341
#869 Remote Loop-Around Test, D-293
#871 FIFO Full Interrupt Test, D-296
#873 State-Of-Health Test, D-305
#874 Duplication Channel Test, D-308
#875 Remote SPE Error Interrupt Test, D-311
#876 Memory Shadowing Test, D-316
#893 Host Adapter Reset Test, H-29
#9 Digital Line NPE Crosstalk Test, D-73
#9 NPE Crosstalk Test, A-24, A-51
#90 Tone Generator Crosstalk Test, T-179
#909 SYSAM Reset Test, S-321
#910 SYSAM Dual Port RAM Test, S-324
#911 Sanity Handshake Test, S-327
#912 SYSAM Refresh Test, S-330
#913 Time-Of-Day Clock Test, S-333
#915 SYSAM G3-MT Loop Around Test, S-336
#916 SYSAM Outpulse Relay Test, S-339
#917 SYSAM Analog Loop Around Test, S-343
#919 Standby SPE Handshake Test, S-204
#92 Control Channel Interface Test, S-262
#920 Standby SPE Configuration Matchup Test, S-206
#93 Switch Control Reset Test, S-266
#939 Signaling Port LAN Loopback, I-12
#94 Control Channel Transmission Test, S-271
#949 Failure Audit, D-246, D-276
#955 EPN Cold Restart, E-93
#956 EPN Warm Restart, E-94
#980 Status Register Comparison Test, D-320
#985 System Link Status, S-309
#989 SNI Fiber Out of Frame Query, F-73
114 Diagnostic Test—Auxiliary Trunk Test, A-175
761 Switch Node Interface Reset Test, S-146
tie trunk circuit pack (TIE-BD), T-99
time slots, TDM bus, 6-13
time-division multiplex (TDM), T-58
TN1648 circuit packs, 5-6
TN1650B circuit packs, 5-6
TN1655 circuit packs, 5-6, E-63, E-78
TN1656 circuit packs, 5-6
TN1657 circuit packs, 5-6
TN2182 circuit packs
description, E-11
duplication, T-148
enhanced tone receiver (ETR) ports, E-11
interchanges, T-149
international settings, T-151
replacing, T-152
time division multiplex (TDM) bus clocks, T-78
tone-clock, T-148
TN264 circuit packs, O-1
TN464 circuit packs
DS1 interface, D-149, U-1
option jumpers, U-4
trunks, U-2
TN553 circuit packs, P-1
TN570 circuit packs, E-18
TN572 circuit packs, 5-6
TN573 circuit packs, 5-6
LEDs, 7-9
switch node interface (SNI), 7-9
TN722 circuit packs, D-149
TN750 circuit packs, 5-6
TN767 circuit packs, D-149, O-1
TN768 circuit packs
description, T-148
duplication, T-148
interchanges, T-149
international settings, T-151
replacing, T-152
time division multiplex (TDM) bus clocks, T-78
tone generator, T-168
TN775, E-27
TN775 circuit packs
expansion port network (EPN) maintenance, 7-6
expansion port networks (EPNs), E-27
TN780 circuit packs
duplication, T-148
interchanges, T-149
international settings, T-151
replacing, T-152
time division multiplex (TDM) bus clocks, T-78
tone generator, T-168
tone clocks, circuit packs, E-27
tone detector circuit (DETR-BD), D-22
tone detectors, enhanced tone receiver ports, E-11
tone generator (TONE-PT), T-168
tone generators, T-148, T-168
tone-clock circuit pack (TONE-BD), T-148
tone-clock circuit packs
duplication, T-148
interchanges, T-149
international settings, T-151
LEDs, 7-13
replacing, T-152
time division multiplex (TDM) bus clocks, T-78
TN2182, T-148
tone generators, T-168
tones, Italian, T-151
troubleshooting
duplicated switch processing element (SPE), 5-11
ISDN-BRI/ASAI problems, 5-29
ISDN-PRI endpoints (wideband), 5-27
ISDN-PRI problems, 5-24
ISDN-PRI test call problems, 5-33
outgoing ISDN-testcall command, 5-35
packet bus, 5-57, 5-61
trunk data module (TDMODULE), P-29, T-98
Trunk Test Call, 6-10

trunks, DS1, U-1
TTR level (TTR-LEV), T-190
TTT. See Terminating Trunk Transmission

U

UDS1 interface circuit pack (UDS1-BD), U-1
UN330B circuit packs, 5-6
UN332 circuit packs, 5-6
uninterruptible power supply (UPS), 1-18
universal DS1 (UDS1) interface circuit packs, D-149, U-1, U-4
updates, software, 6-1
upgrade software command, 8-309
users, multiple access, 3-12

W

warm restarts, reset level 1, 4-3
warning alarms, 7-1
wideband access endpoint port (WAE-PORT), W-1
wideband access endpoints, W-2